TABLE OF CONTENTS

1.0 INTRODUCTION 1

1.1 SYSTEM COVERAGE 1
1.2 SIX-STEP TROUBLESHOOTING PROCEDURE 1

2.0 IDENTIFICATION OF SYSTEM 1

3.0 SYSTEM DESCRIPTION AND FUNCTIONAL OPERATION 1

3.1 ADJUSTABLE PEDALS SYSTEM 2
3.2 AIRBAG SYSTEM/OCCUPANT RESTRAINT CONTROLLER SYSTEM AND OCCUPANT CLASSIFICATION SYSTEM 2
3.2.1 DRIVER AIRBAG 3
3.2.2 CLOCKSPRING 4
3.2.3 PASSENGER AIRBAG 4
3.2.4 SEAT BELT TENSIONER (SBT) 6
3.2.5 SEAT BELT SWITCHES (SBS) 6
3.2.6 DRIVER KNEE BLOCKER AIRBAG 6
3.2.7 FRONT AND SIDE IMPACT SENSOR 6
3.2.8 OCCUPANT CLASSIFICATION SYSTEM 6
3.2.9 SPECIAL TOOLS 9
3.2.10 DIAGNOSTIC TROUBLE CODES 9
3.2.10.1 ACTIVE CODES 9
3.2.10.2 STORED CODES 9
3.3 AUDIO SYSTEM 10
3.3.1 NAVIGATION RADIO 10
3.3.2 REMOTE RADIO CONTROLS 10
3.3.3 CD CHANGER 11
3.3.4 DVD/CD CHANGER 11
3.4 BODY CONTROL MODULE 11
3.5 CHIME WARNING SYSTEM 12
3.5.1 CHIME PRIORITY 12
3.5.2 CHIME ON CONDITIONS 12
3.5.3 WARNING LAMP ANNOUNCEMENT 13
3.5.4 OTHER CHIME ON CONDITIONS 13
3.6 COMMUNICATION 13
3.7 DOOR AJAR SYSTEM 15
3.8 EXTERIOR LIGHTING SYSTEM 15
3.8.1 HEADLAMP POWER 15
3.8.2 HEADLAMP SWITCH 15
3.8.3 PARK LAMP RELAY 15
3.8.4 FOG LAMP RELAY 15
3.8.5 FOG LAMPS 15
3.8.6 EXTERIOR LIGHTING BATTERY SAVER 16
3.8.7 AUTO HEADLAMPS 16
3.9 FRONT CONTROL MODULE 16
3.9.1 CONTROLLED POWER FEEDS 16
3.9.2 RELAY CONTROLS 17
3.9.3 ELECTRICAL INPUTS 18
3.10 HEATING & A/C SYSTEM 19
3.10.1 AUTOMATIC TEMPERATURE CONTROL (ATC) 19
3.10.1.1 MODULE USAGE 19
3.10.1.2 SYSTEM AVAILABILITY 19

TABLE OF CONTENTS - Continued

3.10.1.3 SYSTEM CONTROLS 19
3.10.1.4 SYSTEM REVISIONS 20
3.10.1.5 SYSTEM DIAGNOSTICS 20
3.10.2 MANUAL TEMPERATURE CONTROL (MTC) 21
3.10.2.1 MODULE USAGE 21
3.10.2.2 SYSTEM AVAILABILITY 21
3.10.2.3 SYSTEM CONTROLS 22
3.10.2.4 SYSTEM REVISIONS 23
3.10.2.5 SYSTEM DIAGNOSTICS 23
3.11 CABIN HEATER 24
3.11.1 GENERAL SAFETY INFORMATION 24
3.11.2 COMPONENT DESCRIPTION AND OPERATION 25
3.11.2.1 DCHA ASSEMBLY 25
3.11.2.2 COMBUSTION AIR FAN 25
3.11.2.3 BURNER HOUSING 25
3.11.2.4 BURNER INSERT 25
3.11.2.5 CONTROL UNIT/HEAT EXCHANGER 25
3.11.2.6 DOSING PUMP 25
3.11.3 OPERATION 25
3.11.3.1 VENTING THE DCHA'S EXHAUST 25
3.11.3.2 ACTIVATION 26
3.11.3.3 HEATING 27
3.11.3.4 DEACTIVATION 27
3.11.3.5 SYSTEM REVISIONS 27
3.11.4 DIAGNOSTICS 27
3.12 INSTRUMENT CLUSTER 27
3.12.1 INSTRUMENT CLUSTER SELF TEST 28
3.12.2 MESSAGE CENTER (EXPORT ONLY) 28
3.13 INTERIOR LIGHTING 28
3.13.1 COURTESY LAMP CONTROL 28
3.13.2 ILLUMINATED ENTRY 28
3.13.3 INTERIOR LIGHTING BATTERY SAVER 28
3.14 MEMORY SYSTEM 28
3.14.1 POWER SEAT 29
3.14.2 MEMORY MIRROR 29
3.15 OVERHEAD CONSOLE 29
3.15.1 VEHICLE INFORMATION DISPLAY 30
3.15.2 TRAVELER DISPLAY FUNCTIONS 31
3.15.3 SETTING MAGNETIC ZONE VARIANCE 31
3.15.4 COMPASS CALIBRATION 32
3.15.5 SELF-CHECK DIAGNOSTICS 32
3.15.6 AMBIENT TEMPERATURE SENSOR 32
3.15.7 AMBIENT TEMPERATURE SENSOR FAULT CODES 33
3.15.8 HOMELINK® UNIVERSAL TRANSMITTER 33
3.15.9 TIRE PRESSURE MONITORING SYSTEM (TPMS) 33
3.15.9.1 TRAINING THE SKREEM 33
3.15.9.2 PRESSURE THRESHOLDS 34
3.15.9.3 ACTIVE FAULT AND SYSTEM ALERTS 34
3.16 PARK ASSIST SYSTEM 34
3.17 POWER DOOR LOCK SYSTEM 34
3.17.1 DOOR LOCK INHIBIT 34
3.17.2 AUTOMATIC DOOR LOCKS 35
3.17.3 REMOTE KEYLESS ENTRY (RKE) 35

3.17.3.1 PANIC FUNCTION 35
3.17.3.2 ROLLING CODE 35
3.17.3.3 PROGRAMMABLE DOOR LOCK FEATURES 35
3.18 POWER FOLDING MIRRORS 36
3.19 POWER LIFTGATE SYSTEM 36
3.19.1 POWER LIFTGATE 36
3.19.2 DIAGNOSTIC FEATURES 36
3.19.3 SYSTEM INHIBITORS 36
3.20 POWER SLIDING DOOR SYSTEM 36
3.20.1 POWER SLIDING DOOR 36
3.20.2 DIAGNOSTIC FEATURES 37
3.20.3 SYSTEM INHIBITORS 37
3.21 REAR WINDOW DEFOG/HEATED MIRROR/FRONT WIPER DE-ICE (IF EQUIPPED) 37
3.22 TELECOMMUNICATIONS 37
3.22.1 HANDS FREE PHONE 37
3.23 VEHICLE THEFT SECURITY SYSTEM 38
3.23.1 THATCHAM ALARM SYSTEM (EXPORT ONLY) 38
3.24 WIPER SYSTEM 38
3.24.1 FRONT WIPER 38
3.24.2 SPEED SENSITIVE INTERMITTENT WIPE MODE 39
3.24.3 PULSE WIPE 39
3.24.4 PARK AFTER IGNITION OFF 39
3.24.5 WIPE AFTER WASH 39
3.24.6 REAR WIPER 39
3.24.7 SPEED SENSITIVE INTERMITTENT WIPE MODE 39
3.24.8 WIPE AFTER WASH 39
3.25 USING THE DRBIII® 39
3.26 DRBIII® ERROR MESSAGES 39
3.27 DRBIII® DOES NOT POWER UP (BLANK SCREEN) 39
3.28 DISPLAY IS NOT VISIBLE 39

4.0 DISCLAIMERS, SAFETY, WARNINGS 40

4.1 DISCLAIMERS 40
4.2 SAFETY 40
4.2.1 TECHNICIAN SAFETY INFORMATION 40
4.2.2 VEHICLE PREPARATION FOR TESTING 40
4.2.3 SERVICING SUB-ASSEMBLIES 40
4.2.4 DRBIII® SAFETY INFORMATION 40
4.3 WARNINGS 41
4.3.1 VEHICLE DAMAGE WARNINGS 41
4.3.2 ROAD TESTING A COMPLAINT VEHICLE 41

5.0 REQUIRED TOOLS AND EQUIPMENT 41

6.0 GLOSSARY OF TERMS 41

TABLE OF CONTENTS - Continued

7.0 DIAGNOSTIC INFORMATION AND PROCEDURES 43

ADJUSTABLE PEDALS

PEDAL SENSOR OPEN/SHORTED TO GROUND. 44
PEDAL SENSOR SHORTED TO BATTERY 47
PEDAL SW STUCK FORWARD. 50
PEDAL SW STUCK REARWARD 52
*CAN'T ADJUST PEDALS 54
*CAN'T SET/RECALL MEMORY POSITIONS. 59

AIRBAG

ACCELEROMETER 1 61
ACCELEROMETER 2 61
INTERNAL 1 61
INTERNAL 2 61
INTERNAL 3 61
INTERNAL 4 61
MODULE NOT CONFIGURED FOR OCS. 61
OUTPUT DRIVER 1 61
OUTPUT DRIVER 2 61
STORED ENERGY FIRING 1. 61
AIRBAG WARNING INDICATOR OPEN 64
AIRBAG WARNING INDICATOR SHORT 64
CALIBRATION MISMATCH. 67
CLUSTER MESSAGE MISMATCH 69
DRIVER KNEE BLOCKER CIRCUIT OPEN 71
DRIVER KNEE BLOCKER CIRCUIT SHORT 74
DRIVER KNEE BLOCKER SHORT TO BATTERY 77
DRIVER KNEE BLOCKER SHORT TO GROUND 80
DRIVER SEAT BELT SWITCH CIRCUIT OPEN 83
DRIVER SEAT BELT SWITCH SHORT TO BATTERY 86
DRIVER SEAT BELT SWITCH SHORT TO GROUND 89
DRIVER SEAT BELT SWITCH SHORT TOGETHER 91
DRIVER SEAT BELT TENSIONER CIRCUIT OPEN. 93
DRIVER SEAT BELT TENSIONER CIRCUIT SHORT 96
DRIVER SEAT BELT TENSIONER SHORT TO BATTERY. 99
DRIVER SEAT BELT TENSIONER SHORT TO GROUND. 102
DRIVER SQUIB 1 CIRCUIT OPEN 105
DRIVER SQUIB 1 CIRCUIT SHORT 108
DRIVER SQUIB 1 SHORT TO BATTERY 111
DRIVER SQUIB 1 SHORT TO GROUND 114
DRIVER SQUIB 2 CIRCUIT OPEN 117
DRIVER SQUIB 2 CIRCUIT SHORT 120
DRIVER SQUIB 2 SHORT TO BATTERY 123
DRIVER SQUIB 2 SHORT TO GROUND 126
INTERROGATE OCM 129
LEFT CURTAIN OR SEAT SQUIB CIRCUIT OPEN 131
LEFT CURTAIN OR SEAT SQUIB CIRCUIT SHORT 134
LEFT CURTAIN OR SEAT SQUIB SHORT TO BATTERY 137
LEFT CURTAIN OR SEAT SQUIB SHORT TO GROUND 140
LEFT FRONT IMPACT SENSOR INTERNAL 1. 143
NO LEFT FRONT IMPACT SENSOR COMMUNICATION 143
LEFT SIDE IMPACT SENSOR 1 INTERNAL 1 147

NO LEFT SIDE IMPACT SENSOR 1 COMMUNICATION. 147
LEFT SIDE IMPACT SENSOR 2 INTERNAL 1 151
NO LEFT SIDE IMPACT SENSOR 2 COMMUNICATION. 151
LEFT SIDE IMPACT SENSOR 3 INTERNAL 1 155
NO LEFT SIDE IMPACT SENSOR 3 COMMUNICATION. 155
LOSS OF IGNITION RUN - START 159
ORC RUN - START DRIVER OPEN 159
ORC RUN - START DRIVER OVER CURRENT 159
ORC RUN - START DRIVER OVER TEMP. 159
ORC RUN - START DRIVER OVER VOLT 159
ORC RUN - START DRIVER SHORT TO GROUND 159
LOSS OF IGNITION RUN ONLY 165
ORC RUN ONLY DRIVER OPEN. 165
ORC RUN ONLY DRIVER OVER CURRENT 165
ORC RUN ONLY DRIVER OVER TEMP 165
ORC RUN ONLY DRIVER OVER VOLT 165
ORC RUN ONLY DRIVER SHORT TO GROUND. 165
NO CLUSTER MESSAGE 171
NO OCM MESSAGE. 173
NO ODOMETER MESSAGE 175
NO ORC MESSAGE 178
NO PCI LOOPBACK 181
PCI BUS SHORT TO BATTERY. 181
PCI BUS SHORT TO GROUND. 181
NO PCI TRANSMISSION 187
NO RIGHT FRONT IMPACT SENSOR COMMUNICATION 189
RIGHT FRONT IMPACT SENSOR INTERNAL 1 189
NO RIGHT SIDE IMPACT SENSOR 1 COMMUNICATION 193
RIGHT SIDE IMPACT SENSOR 1 INTERNAL 1. 193
NO RIGHT SIDE IMPACT SENSOR 2 COMMUNICATION 197
RIGHT SIDE IMPACT SENSOR 2 INTERNAL 1. 197
NO RIGHT SIDE IMPACT SENSOR 3 COMMUNICATION 201
RIGHT SIDE IMPACT SENSOR 3 INTERNAL 1. 201
OCCUPANT CLASSIFICATION MODULE DATA TRANSFER ERROR 205
OCCUPANT CLASSIFICATION UNDETERMINED 207
RE-ZERO INCOMPLETE 207
SEAT NOT CALIBRATED 207
SYSTEM VERIFICATION REQUIRED - OCSVR 207
OCM CONFIGURATION MISMATCH. 212
PASSENGER AIRBAG OFF INDICATOR CIRCUIT SHORT TO BATTERY 214
PASSENGER AIRBAG OFF INDICATOR CIRCUIT SHORT TO GROUND. 217
PASSENGER BTS OPEN. 222
PASSENGER BTS SHORT TO BATTERY. 222
PASSENGER BTS SHORT TO GROUND. 222
PASSENGER BTS SHORT TOGETHER. 222
PASSENGER PRESSURE SENSOR OPEN. 226
PASSENGER PRESSURE SENSOR SHORT GROUND 226
PASSENGER PRESSURE SENSOR SHORT TO BATTERY. 226
PASSENGER PRESSURE SENSOR SHORT TOGETHER 226
PASSENGER SEAT BELT SWITCH CIRCUIT OPEN. 229
PASSENGER SEAT BELT SWITCH SHORT TO BATTERY. 231
PASSENGER SEAT BELT SWITCH SHORT TO GROUND. 234
PASSENGER SEAT BELT SWITCH SHORT TOGETHER 237

PASSENGER SEAT BELT TENSIONER CIRCUIT OPEN 239
PASSENGER SEAT BELT TENSIONER CIRCUIT SHORT 242
PASSENGER SEAT BELT TENSIONER SHORT TO BATTERY 245
PASSENGER SEAT BELT TENSIONER SHORT TO GROUND 248
PASSENGER SEAT SENSOR FLUID LEVEL TOO LOW. 250
PASSENGER SQUIB 1 CIRCUIT OPEN 251
PASSENGER SQUIB 1 CIRCUIT SHORT. 254
PASSENGER SQUIB 1 SHORT TO BATTERY 257
PASSENGER SQUIB 1 SHORT TO GROUND 260
PASSENGER SQUIB 2 CIRCUIT OPEN 263
PASSENGER SQUIB 2 CIRCUIT SHORT. 266
PASSENGER SQUIB 2 SHORT TO BATTERY 269
PASSENGER SQUIB 2 SHORT TO GROUND 272
POWER SUPPLY VOLTAGE LOW. 275
RIGHT CURTAIN OR SEAT SQUIB CIRCUIT OPEN 278
RIGHT CURTAIN OR SEAT SQUIB CIRCUIT SHORT. 281
RIGHT CURTAIN OR SEAT SQUIB SHORT TO BATTERY 284
RIGHT CURTAIN OR SEAT SQUIB SHORT TO GROUND 287
VEHICLE BODY STYLE MISMATCH. 290
VIN MISMATCH. 293
*AIRBAG INDICATOR ON WITHOUT ACTIVE TROUBLE CODES 297

AUDIO
ALL OUTPUTS SHORT 298
CASSETTE PLAYER INOP 301
CD MECHANICAL FAILURE 301
NO PCI TRANSMISSION 301
REAR TRANSMITTER FAILURE 301
*AM/FM SWITCH INOPERATIVE. 301
*ANY STATION PRESET SWITCH INOPERATIVE. 301
*BALANCE INOPERATIVE 301
*CD EJECT SWITCH INOPERATIVE. 301
*EQUALIZER INOPERATIVE 301
*FADER INOPERATIVE 301
*FF/RW SWITCH INOPERATIVE 301
*HOUR/MINUTE SWITCHES INOPERATIVE 301
*PAUSE/PLAY SWITCH INOPERATIVE 301
*PWR SWITCH INOPERATIVE 301
*SCAN SWITCH INOPERATIVE 301
*SEEK SWITCH INOPERATIVE. 301
*SET SWITCH INOPERATIVE 301
*TAPE EJECT SWITCH INOPERATIVE. 301
*TIME SWITCH INOPERATIVE 301
*TUNE SWITCH INOPERATIVE. 301
CD CHANGER MECHANICAL FAILURE. 303
CD CHANGER READ FAILURE. 304
CD CHANGER TEMPERATURE HIGH 305
CD PLAY FAILURE 306
CD READ FAILURE 307
CD TEMPERATURE HIGH. 308
GPS ANTENNA NOT CONNECTED 309
LOW VOLTAGE LEVEL 310
NBS OUTPUT 1 OPEN. 311

NBS OUTPUT 2 OPEN 311
NBS OUTPUT 1 SHORT TO BATT 313
NBS OUTPUT 2 SHORT TO BATT 313
NO ANTENNA CONNECTION 315
NO COMMUNICATION WITH BCM 316
POWER AMP SHUTDOWN 317
RADIO AND NAV GPS ANTENNA NOT CONNECTED 320
REMOTE RADIO SWITCH STUCK 321
*REMOTE RADIO CONTROLS INOPERATIVE 324

AUTOMATIC TEMPERATURE CONTROL
AC PRESSURE TOO HIGH (ACTIVE) 327
AC PRESSURE TOO HIGH (STORED) 328
DRIVER BLEND DOOR NOT RESPONDING (STORED) 328
DRIVER BLEND DOOR RANGE TOO LARGE (STORED) 328
DRIVER BLEND DOOR TRAVEL TOO SMALL (STORED) 328
EVAP TEMP SENSOR OPEN (STORED) 328
EVAP TEMP SENSOR SHORTED (STORED) 328
FRONT IR SENSOR AND CONTROL HEAD MISMATCH (STORED) 328
FRONT IR SENSOR CHANGE TOO LARGE (STORED) 328
FRONT IR SENSOR HIGH (STORED) 328
FRONT IR SENSOR LOW (STORED) 328
FRONT IR SENSOR NOT CALIBRATED (STORED) 328
FRONT KEYBOARD COMMUNICATION FAULT (STORED) 328
FRONT KEYBOARD FAULT (STORED) 328
FRONT MODE DOOR NOT RESPONDING (STORED) 328
FRONT MODE DOOR TRAVEL TOO LARGE (STORED) 328
FRONT MODE DOOR TRAVEL TOO SMALL (STORED) 328
PASS BLEND DOOR NOT RESPONDING (STORED) 328
PASS BLEND DOOR TRAVEL TOO LARGE (STORED) 328
PASS BLEND DOOR TRAVEL TOO SMALL (STORED) 328
PCI BUS SHORTED HIGH (STORED) 328
PCI BUS SHORTED LOW (STORED) 328
REAR BLEND DOOR NOT RESPONDING (STORED) 328
REAR BLEND DOOR RANGE TOO LARGE (STORED) 328
REAR BLEND DOOR TRAVEL TOO SMALL (STORED) 328
REAR FAN POT OPEN (STORED) 328
REAR FAN POT SHORTED (STORED) 328
REAR KEYBOARD FAULT (STORED) 328
REAR MODE DOOR NOT RESPONDING (STORED) 328
REAR MODE DOOR TRAVEL TOO LARGE (STORED) 328
REAR MODE DOOR TRAVEL TOO SMALL (STORED) 328
REAR MODE POT OPEN (STORED) 328
REAR MODE POT SHORTED (STORED) 328
RECIRC DOOR NOT RESPONDING (STORED) 328
RECIRC DOOR TRAVEL TOO LARGE (STORED) 328
RECIRC DOOR TRAVEL TOO SMALL (STORED) 328
COOLDOWN TEST FAILED 335
DRIVER BLEND DOOR NOT RESPONDING (ACTIVE) 337
DRIVER BLEND DOOR TRAVEL TOO LARGE (ACTIVE) 339
DRIVER BLEND DOOR TRAVEL TOO SMALL (ACTIVE) 340
EEPROM CHECKSUM ERROR (ACTIVE) 342
EVAP TEMP SENSOR OPEN (ACTIVE) 343

EVAP TEMP SENSOR SHORTED (ACTIVE) 347
FRONT AND REAR BLOWER OUTPUT 1 OPEN 349
FRONT AND REAR BLOWER OUTPUT 2 OPEN 349
FRONT AND REAR BLOWER OUTPUT 1 SHORT TO BATT 350
FRONT AND REAR BLOWER OUTPUT 2 SHORT TO BATT 350
FRONT IR SENSOR AND CONTROL HEAD MISMATCH (ACTIVE). 351
FRONT IR SENSOR CHANGE TOO LARGE (ACTIVE). 351
FRONT IR SENSOR HIGH (ACTIVE) 351
FRONT IR SENSOR LOW (ACTIVE). 351
FRONT IR SENSOR NOT CALIBRATED (ACTIVE) 352
FRONT KEYBOARD FAULT (ACTIVE) 352
FRONT KEYBOARD COMMUNICATION FAULT (ACTIVE) 357
FRONT MODE DOOR NOT RESPONDING (ACTIVE). 358
FRONT MODE DOOR TRAVEL TOO LARGE (ACTIVE) 360
FRONT MODE DOOR TRAVEL TOO SMALL (ACTIVE) 361
INVALID CONDITIONS FOR COOLDOWN TEST, EVAP TEMPERATURE TOO LOW. 362
PASS BLEND DOOR NOT RESPONDING (ACTIVE). 365
PASS BLEND DOOR TRAVEL TOO LARGE (ACTIVE) 367
PASS BLEND DOOR TRAVEL TOO SMALL (ACTIVE) 368
PCI BUS SHORTED HIGH (ACTIVE) 370
PCI BUS SHORTED LOW (ACTIVE). 370
REAR BLEND DOOR NOT RESPONDING (ACTIVE) 371
REAR BLEND DOOR TRAVEL TOO LARGE (ACTIVE). 373
REAR BLEND DOOR TRAVEL TOO SMALL (ACTIVE) 374
REAR FAN POT OPEN (ACTIVE) 375
REAR FAN POT SHORTED (ACTIVE) 375
REAR MODE POT OPEN (ACTIVE) 375
REAR MODE POT SHORTED (ACTIVE) 375
REAR KEYBOARD FAULT (ACTIVE) 376
REAR MODE DOOR NOT RESPONDING (ACTIVE). 380
REAR MODE DOOR TRAVEL TOO LARGE (ACTIVE) 382
REAR MODE DOOR TRAVEL TOO SMALL (ACTIVE). 383
RECIRC DOOR NOT RESPONDING (ACTIVE) 384
RECIRC DOOR TRAVEL TOO LARGE (ACTIVE). 386
RECIRC DOOR TRAVEL TOO SMALL (ACTIVE). 387
*ATC HEAD LED(S)/BACK LIGHTING INOPERATIVE. 388
*FRONT BLOWER MOTOR INOPERATIVE 390
*FRONT BLOWER RUNS AT ONLY ONE SPEED 396
*HVAC SYSTEM TEST. 398
*REAR ATC SWITCH LED(S)/BACK LIGHTING INOPERATIVE 402
*REAR BLOWER MOTOR INOPERATIVE 404
*REAR BLOWER RUNS AT ONLY ONE SPEED 410

CABIN HEATER
A. CABIN HEATER PRE-TEST 412
CABIN HEATER CONTROL CIRCUIT OPEN (STORED). 412
CABIN HEATER CONTROL CIRCUIT SHORT TO BATTERY (STORED). 412
B1000 CONTROL UNIT ERRONEOUS. 416
B1800 NO START. 417
B1801 FLAME OUT: DURING HEATING CYCLE. 417
B1801 FLAME OUT: UNSTABLE OPERATION. 417
B1802 POWER SUPPLY OUT OF RANGE: LOW VOLTAGE THRESHOLD. 421

B1802 POWER SUPPLY OUT OF RANGE: VOLTAGE ABOVE 15.5 VOLTS 424
B1803 FLAME DETECTED PRIOR TO COMBUSTION 425
B1811 HEATER OVERHEATED 426
B1813 HEATER IN LOCKOUT MODE 430
B1820 DOSING PUMP CIRCUIT: OPEN OR SHORT TO BATTERY 433
B1820 DOSING PUMP CIRCUIT: SHORT TO GROUND 436
B1821 COMBUSTION AIR FAN CIRCUIT: OPEN 439
B1821 COMBUSTION AIR FAN CIRCUIT: SHORT TO GROUND 439
B1822 GLOW PIN/FLAME SENSOR: OPEN 440
B1822 GLOW PIN/FLAME SENSOR: SHORT TO GROUND 440
B1823 WATER PUMP CIRCUIT: OPEN 441
B1823 WATER PUMP CIRCUIT: SHORT TO GROUND 441
B1824 FAN SWITCH LINE SHORT TO GROUND 442
CABIN HEATER CONTROL CIRCUIT OPEN (ACTIVE) 443
CABIN HEATER CONTROL CIRCUIT SHORT TO BATTERY (ACTIVE) 447
*CABIN HEATER INOPERABLE FROM A/C - HEATER MODULE (MTC) 450
*CABIN HEATER INOPERABLE FROM AUTO TEMP CONTROL (ATC) 452

CHIME
*CHIME INOPERATIVE 455
*KEY IN IGNITION AND DRIVER'S DOOR OPEN CHIME NOT OPERATING PROPERLY 457
*PROBLEM WITH THE VEHICLE SPEED WARNING CHIME 458

COMMUNICATION
APM MESSAGES NOT RECEIVED 459
ATC MODULE MESSAGES NOT RECEIVED 460
AUDIO MESSAGES NOT RECEIVED 461
BCM, PCI BUS SHORTED TO BATTERY 462
BCM, PCI BUS SHORTED TO GROUND 462
FCM, PCI BUS SHORTED TO BATTERY 462
FCM, PCI BUS SHORTED TO GROUND 462
COUNTRY CODE NOT PROGRAMMED 464
FCM MESSAGES NOT RECEIVED 465
FCM, BCM COMMUNICATION FAULT 466
FCM, HVAC COMMUNICATION FAULT 467
FCM, PCI INTERNAL FAULT 468
FCM, PCM COMMUNICATION FAULT 469
FCM, RADIO COMMUNICATION FAULT 471
FCM, TCM COMMUNICATION FAULT 472
INTERNAL BCM FAILURE 473
LEFT PSD MESSAGES NOT RECEIVED 474
LIFTGATE MODULE MESSAGES NOT RECEIVED 476
MIC MESSAGES NOT RECEIVED 478
MSM MESSAGES NOT RECEIVED 480
ORC MESSAGES NOT RECEIVED 481
OTIS MODULE MESSAGE MISMATCH 482
OTIS MODULE MESSAGES NOT RECEIVED 484
PCI INTERNAL HARDWARE FAILURE 485
PCM MESSAGES NOT RECEIVED 486
RADIO MEM MSG NOT RECEIVED 488
RIGHT PSD MESSAGES NOT RECEIVED 489
SKIM (SKREEM) MESSAGES NOT RECEIVED 491

TCM MESSAGES NOT RECEIVED 492
*NO RESPONSE FROM AMPLIFIER 493
*NO RESPONSE FROM AUTOMATIC TEMPERATURE CONTROL MODULE 495
*NO RESPONSE FROM BODY CONTROL MODULE 497
*NO RESPONSE FROM CABIN HEATER ASSIST - DIESEL ONLY 499
*NO RESPONSE FROM CONTROLLER ANTILOCK BRAKE 501
*NO RESPONSE FROM ECM (PCI BUS) - DIESEL ONLY 503
*NO RESPONSE FROM ECM (SCI ONLY) - DIESEL ONLY 504
*NO RESPONSE FROM FRONT CONTROL MODULE 506
*NO RESPONSE FROM HANDS FREE MODULE 508
*NO RESPONSE FROM HVAC 510
*NO RESPONSE FROM INSTRUMENT CLUSTER 512
*NO RESPONSE FROM LEFT SLIDING DOOR CONTROL MODULE 515
*NO RESPONSE FROM MEMORY SEAT/MIRROR/ADJUSTABLE PEDALS MODULE 518
*NO RESPONSE FROM OCCUPANT CLASSIFICATION MODULE 520
*NO RESPONSE FROM OCCUPANT RESTRAINT CONTROLLER 522
*NO RESPONSE FROM OVERHEAD CONSOLE 524
*NO RESPONSE FROM PARK ASSIST MODULE 526
*NO RESPONSE FROM PCM (PCI BUS) - NGC 528
*NO RESPONSE FROM PCM (PCM SCI ONLY) - NGC 529
*NO RESPONSE FROM POWER LIFTGATE MODULE 532
*NO RESPONSE FROM RADIO 535
*NO RESPONSE FROM RIGHT SLIDING DOOR CONTROL MODULE 537
*NO RESPONSE FROM SENTRY KEY REMOTE ENTRY MODULE 540
*NO RESPONSE FROM THATCHAM ALARM MODULE 542
*NO RESPONSE FROM TRANSMISSION CONTROL MODULE - EATX (DIESEL) .544
*NO RESPONSE FROM TRANSMISSION CONTROL MODULE - NGC 547
*PCI BUS COMMUNICATION FAILURE 550

DOOR AJAR
*HOOD AJAR CIRCUIT OPEN (EXPORT ONLY) 553
*HOOD AJAR CIRCUIT SHORTED TO GROUND (EXPORT ONLY) 554
*LEFT FRONT DOOR AJAR SWITCH SENSE CIRCUIT OPEN 555
*LEFT FRONT DOOR AJAR SWITCH SENSE CIRCUIT SHORTED TO GROUND. .556
*LEFT SLIDING DOOR AJAR SWITCH SENSE CIRCUIT OPEN 557
*LEFT SLIDING DOOR AJAR SWITCH SENSE CIRCUIT SHORTED TO GROUND 559
*LIFTGATE AJAR CIRCUIT OPEN 560
*LIFTGATE AJAR CIRCUIT SHORTED TO GROUND 561
*RIGHT FRONT DOOR AJAR SWITCH SENSE CIRCUIT OPEN 562
*RIGHT FRONT DOOR AJAR SWITCH SENSE CIRCUIT SHORTED TO GROUND 563
*RIGHT SLIDING DOOR AJAR CIRCUIT OPEN 564
*RIGHT SLIDING DOOR AJAR CIRCUIT SHORTED TO GROUND 566

ELECTRICALLY HEATED SYSTEMS
EBL RUN ONLY RELAY OPEN 567
EBL RUN ONLY RELAY SHORTED TO BATTERY 569

EXTERIOR LIGHTING

BACKUP LAMP OUTPUT OPEN 570
BACKUP LAMP OUTPUT SHORT 572
FRONT FOG LAMP RELAY OPEN 573
FRONT FOG LAMP SHORTED TO BATTERY 575
HEADLAMP SWITCH MISMATCH 576
HEADLAMP SWITCH OPEN 577
HEADLAMP SWITCH SHORT TO GROUND 579
HIGH BEAM SWITCH INPUT OPEN 581
HIGH BEAM SWITCH INPUT SHORT 583
LEFT FRONT TURN SIGNAL OUTPUT OPEN 585
LEFT FRONT TURN SIGNAL OUTPUT SHORT 587
LEFT HIGH BEAM HEADLAMP CIRCUIT OPEN 589
LEFT HIGH BEAM HEADLAMP CIRCUIT SHORTED TO GROUND 591
LEFT HIGH BEAM HEADLAMP CIRCUIT SHORTED TO VOLTAGE 593
LEFT LOW BEAM HEADLAMP CIRCUIT OPEN 595
LEFT LOW BEAM HEADLAMP CIRCUIT SHORTED TO GROUND 597
LEFT LOW BEAM HEADLAMP CIRCUIT SHORTED TO VOLTAGE 599
LEFT REAR TURN SIGNAL OUTPUT OPEN 601
LEFT REAR TURN SIGNAL OUTPUT SHORT 603
LEFT SIDE PARK LAMP OPEN 605
PARK LAMP OUTPUT 1 OPEN 607
PARK LAMP OUTPUT 1 SHORT TO BATTERY 609
PARK LAMP OUTPUT 2 OPEN 610
PARK LAMP OUTPUT 2 SHORT TO BATTERY 612
RIGHT FRONT TURN SIGNAL OUTPUT OPEN 613
RIGHT FRONT TURN SIGNAL OUTPUT SHORT 615
RIGHT HIGH BEAM HEADLAMP CIRCUIT OPEN 617
RIGHT HIGH BEAM HEADLAMP CIRCUIT SHORTED TO GROUND 619
RIGHT HIGH BEAM HEADLAMP CIRCUIT SHORTED TO VOLTAGE 621
RIGHT LOW BEAM HEADLAMP CIRCUIT OPEN 623
RIGHT LOW BEAM HEADLAMP CIRCUIT SHORTED TO GROUND 625
RIGHT LOW BEAM HEADLAMP CIRCUIT SHORTED TO VOLTAGE 627
RIGHT REAR TURN SIGNAL OUTPUT OPEN 629
RIGHT REAR TURN SIGNAL OUTPUT SHORT 631
RIGHT SIDE PARK LAMP OPEN 633
TURN SIGNAL SWITCH INPUT OPEN 635
TURN SIGNAL SWITCH INPUT SHORT 637

HEATING & A/C

A/C SWITCH FAULT (ACTIVE) - MTC 639
CHECKSUM FAILURE (ACTIVE) - MTC 639
DEFOG SWITCH FAULT (ACTIVE) - MTC 639
POWER SWITCH FAULT (ACTIVE) - MTC 639
REAR WIPER WASHER SWITCH FAULT (ACTIVE) - MTC 639
RECIRC SWITCH FAULT (ACTIVE) - MTC 639
A/C SWITCH FAULT (STORED) - MTC 641
BACKLIGHT DIMMING RX FAILURE (STORED) - MTC 641
BLEND OVERCURRENT (STORED) - MTC 641
CHECKSUM FAILURE (STORED) - MTC 641
DEFOG SWITCH FAULT (STORED) - MTC 641
EVAPORATOR TEMPERATURE SENSOR CIRCUIT OPEN (STORED) - MTC 641
EVAPORATOR TEMPERATURE SENSOR CIRCUIT SHORT (STORED) - MTC 641

LOOPBACK TEST FAILURE (STORED) - MTC 641
MODE OVERCURRENT (STORED) - MTC 641
NO FUEL LEVEL MESSAGE RECEIVED (STORED) - MTC 641
PCM COMMUNICATION FAILURE (STORED) - MTC 641
POWER SWITCH FAULT (STORED) - MTC 641
REAR BLEND OVERCURRENT (STORED) - MTC 641
REAR BLEND POT CIRCUIT OPEN (STORED) - MTC 641
REAR BLEND POT CIRCUIT SHORT (STORED) - MTC 641
REAR MODE OVERCURRENT (STORED) - MTC 641
REAR WIPER WASHER SWITCH FAULT (STORED) - MTC 641
RECIRC OVERCURRENT (STORED) - MTC 641
RECIRC SWITCH FAULT (STORED) - MTC 641
TX FAILURE (STORED) - MTC 641
VEHICLE ODOMETER FAILURE (STORED) - MTC 641
ZONE OVERCURRENT (STORED) - MTC 641
ACT CKT TEST PASSED, OVERCURRENT DTCS ACTIVE - MTC 646
BLEND CIRCUIT SHORTED TO GROUND - MTC 646
BLEND CIRCUIT SHORTED TO IGN OR BATT - MTC 646
COMMON DRIVER SHORTED TO GROUND - MTC 646
COMMON DRIVER SHORTED TO IGN OR BATT - MTC 646
MODE CIRCUIT SHORTED TO GROUND - MTC 646
MODE CIRCUIT SHORTED TO IGN OR BATT - MTC 646
REAR BLEND CIRCUIT SHORTED TO GROUND - MTC 646
REAR BLEND CIRCUIT SHORTED TO IGN OR BATT - MTC 646
REAR MODE CIRCUIT SHORTED TO GROUND - MTC 646
REAR MODE CIRCUIT SHORTED TO IGN OR BATT - MTC 646
RECIRC CIRCUIT SHORTED TO GROUND - MTC 646
RECIRC CIRCUIT SHORTED TO IGN OR BATT - MTC 646
SHORT TOO COMPLEX - MTC 646
ZONE CIRCUIT SHORTED TO GROUND - MTC 646
ZONE CIRCUIT SHORTED TO IGN OR BATT - MTC 646
BACKLIGHT DIMMING RX FAILURE (ACTIVE) - MTC 653
BLEND CALIBRATION FAULT - MTC 654
MODE CALIBRATION FAULT - MTC 654
REAR BLEND CALIBRATION FAULT - MTC 654
REAR MODE CALIBRATION FAULT - MTC 654
RECIRCULATION CALIBRATION FAULT - MTC 654
ZONE CALIBRATION FAULT - MTC 654
BLEND OVERCURRENT (ACTIVE) - MTC 662
MODE OVERCURRENT (ACTIVE) - MTC 662
REAR BLEND OVERCURRENT (ACTIVE) - MTC 662
REAR MODE OVERCURRENT (ACTIVE) - MTC 662
RECIRC OVERCURRENT (ACTIVE) - MTC 662
ZONE OVERCURRENT (ACTIVE) - MTC 662
BLOWER NOT ON HIGH - MTC 664
COOLDOWN TEST SENSOR FAILURE - MTC 665
COOLDOWN TIME EXCESSIVE FAULT - MTC 665
COOLDOWN TEST TOO COLD TO START - MTC 667
EVAPORATOR TEMPERATURE SENSOR CIRCUIT OPEN (ACTIVE) - MTC 670
EVAPORATOR TEMPERATURE SENSOR CIRCUIT SHORT (ACTIVE) - MTC 673
FRONT AND REAR BLOWER OUTPUT 1 OPEN 675
FRONT AND REAR BLOWER OUTPUT 2 OPEN 675
FRONT AND REAR BLOWER OUTPUT 1 SHORT TO BATT 677

FRONT AND REAR BLOWER OUTPUT 2 SHORT TO BATT 677
LOOPBACK TEST FAILURE (ACTIVE) - MTC 679
NO FUEL LEVEL MESSAGE RECEIVED (ACTIVE) - MTC 680
PCM COMMUNICATION FAILURE (ACTIVE) - MTC 680
VEHICLE ODOMETER FAILURE (ACTIVE) - MTC 680
REAR BLEND POT CIRCUIT OPEN (ACTIVE) - MTC 682
REAR BLEND POT CIRCUIT SHORT (ACTIVE) - MTC. 685
TX FAILURE (ACTIVE) - MTC 687
*A/C STATUS INDICATOR FLASHING - MTC 689
*RECIRC STATUS INDICATOR FLASHING - MTC. 689
*BLEND/MODE/RECIRC DOOR OPERATION IMPROPER -- DUAL & THREE-ZONE MTC 691
*BLEND/MODE/RECIRC DOOR OPERATION IMPROPER -- SINGLE-ZONE MTC .695
*FRONT A/C - HEATER CONTROL ILLUMINATION INOPERATIVE - MTC 697
*FRONT BLOWER MOTOR INOPERATIVE - MTC 699
*FRONT BLOWER MOTOR SPEEDS INCORRECT - MTC. 704
*HVAC SYSTEM TEST - MTC 706
*REAR A/C - HEATER CONTROL ILLUMINATION INOPERATIVE - MTC 709
*REAR BLOWER MOTOR INOPERATIVE - MTC. 711
*REAR BLOWER MOTOR SPEEDS INCORRECT - MTC 715
*REAR BLOWER REAR CONTROL SWITCH INOP IN ONE OR MORE SPEEDS - MTC 719

IGNITION, POWER, ACCESSORY

ACCESSORY POWER OUTPUT 1 OPEN 721
ACCESSORY POWER OUTPUT 1 SHORT TO B+ 723
ACCESSORY POWER OUTPUT 2 OPEN 725
ACCESSORY POWER OUTPUT 2 SHORT TO B+ 727
APM RELAY OUTPUT 1 OPEN - FCM 729
APM RELAY OUTPUT 1 SHORT TO BATT - FCM. 731
BRAKE SHIFT INTERLOCK OUTPUT OPEN - FCM 733
CPA NOT ENGAGED 735
HORN INPUT STUCK. 737
HORN RELAY OPEN 738
HORN RELAY SHORTED TO B+. 740
IGN. UNLOCK R-S OUTPUT OPEN 742
IGN. UNLOCK R-S OUTPUT OVER CURRENT. 744
IGN. UNLOCK-R-S OUTPUT OVER VOLT 746
IGN. UNLOCK-R-S OUTPUT SHORT TO GROUND 747
IGNITION MUX SWITCH INPUT OPEN 749
IGNITION MUX SWITCH INPUT SHORT 751
IGNITION RUN OUTPUT SHORT 753
IGNITION RUN/START INPUT WIRING 755
IGNITION START INPUT WIRING 757
INTERNAL DRIVER FAULT #1. 759
INTERNAL DRIVER FAULT #2. 760
INTERNAL DRIVER FAULT #3. 761
REPLACE MODULE 762
RUN/START HARDWARE INPUT FAILURE 763

INSTRUMENT CLUSTER

ABS LAMP CKT SHORT 765
ABS LAMP OPEN 765
AIRBAG LAMP CKT SHORT 765
AIRBAG LAMP OPEN 765
EL PANEL SHORT 766
FRONT FOG LAMP INDICATOR OPEN 768
FRONT FOG LAMP INDICATOR SHORT TO GROUND 770
FUEL GAUGE CHECKSUM FAILURE 772
SPEEDOMETER CHECKSUM FAILURE 772
TACHOMETER CHECKSUM FAILURE 772
TEMPERATURE GAUGE CHECKSUM FAILURE 772
FUEL LEVEL SENDING UNIT INPUT OPEN 773
FUEL LEVEL SENDING UNIT INPUT SHORT 775
IOD WAKEUP CLUSTER OUTPUT OPEN 777
IOD WAKEUP CLUSTER OUTPUT SHORT 779
LEFT TURN SIGNAL INDICATOR DRIVER CIRCUIT OPEN 781
LEFT TURN SIGNAL INDICATOR DRIVER CIRCUIT OPEN (EXPORT) 783
LEFT TURN SIGNAL INDICATOR SHORT 785
LEFT TURN SIGNAL INDICATOR SHORT (EXPORT) 787
LOOPBACK FAILURE 789
NO ABS BUS MESSAGES RECEIVED 790
NO BCM BUS MESSAGES RECEIVED 790
NO FCM BUS MESSAGES RECEIVED 790
NO ORC BUS MESSAGES RECEIVED 790
NO TCM BUS MESSAGES RECEIVED 790
NO PCM BUS MESSAGES RECEIVED 791
PANEL DIMMING OUTPUT SHORT 792
REAR FOG INDICATOR OUTPUT OPEN 797
REAR FOG INDICATOR OUTPUT SHORT 799
RIGHT TURN SIGNAL INDICATOR OPEN 801
RIGHT TURN SIGNAL INDICATOR OPEN (EXPORT) 803
RIGHT TURN SIGNAL INDICATOR SHORT 805
RIGHT TURN SIGNAL INDICATOR SHORT (EXPORT) 807
TCM MESSAGE MISMATCH 809
TRACTION SWITCH INPUT STUCK - BCM 810
*ANY PCI BUS INDICATOR INOPERATIVE 811
*SEAT BELT INDICATOR ALWAYS ON 812

INTERIOR LIGHTING

DOME SWITCH INPUT OPEN 813
DOME SWITCH INPUT SHORT 814
DOOR/LIFTGATE LAMP OUTPUT SHORT 815
FRONT COURTESY LAMPS OUTPUT SHORT 816
READING LAMP OUTPUT SHORT 817

MEMORY SEAT

BCM MESSAGES NOT RECEIVED 818
CHARGING VOLTAGE HIGH MESSAGE 819
CHARGING VOLTAGE LOW MESSAGE 820
DRIVER FRONT RISER DOWN SWITCH STUCK 821
DRIVER FRONT RISER SENSOR OUT OF RANGE HIGH 823
DRIVER FRONT RISER SENSOR OUT OF RANGE LOW 826

DRIVER FRONT RISER UP SWITCH STUCK 829
DRIVER HORIZONTAL FORWARD SWITCH STUCK 831
DRIVER HORIZONTAL REARWARD SWITCH STUCK 833
DRIVER HORIZONTAL SENSOR OUT OF RANGE HIGH. 835
DRIVER HORIZONTAL SENSOR OUT OF RANGE LOW 838
DRIVER MIRROR HORIZONTAL SENSOR OUT OF RANGE HIGH 841
DRIVER MIRROR HORIZONTAL SENSOR OUT OF RANGE LOW 843
DRIVER MIRROR VERTICAL SENSOR OUT OF RANGE HIGH 845
DRIVER MIRROR VERTICAL SENSOR OUT OF RANGE LOW. 847
DRIVER REAR RISER DOWN SWITCH STUCK 849
DRIVER REAR RISER SENSOR OUT OF RANGE HIGH 851
DRIVER REAR RISER SENSOR OUT OF RANGE LOW 854
DRIVER REAR RISER UP SWITCH STUCK 857
DRIVER RECLINER DOWN SWITCH STUCK 859
DRIVER RECLINER SENSOR OUT OF RANGE HIGH 861
DRIVER RECLINER SENSOR OUT OF RANGE LOW 864
DRIVER RECLINER UP SWITCH STUCK 867
EEPROM CHECKSUM FAILURE. 869
LOOPBACK FAILURE. 869
MEMORY POSITION SWITCH STUCK. 870
MEMORY SWITCH INPUT OPEN 872
MEMORY SWITCH INPUT SHORT 874
PCI BUS SHORTED TO BATTERY 876
PCI BUS SHORTED TO GROUND 876
PCM MESSAGES NOT RECEIVED. 877
TCM MESSAGES NOT RECEIVED. 879

OVERHEAD CONSOLE
BUS MESSAGES MISSING 880
COMPASS TEST FAILURE 882
DEMAGNETIZE COMPASS AS PER SERVICE MANUAL 883
EC MIRROR DAY/NIGHT LINE FAULT 884
EVIC INTERNAL FAILURE 886
LOOPBACK FAILURE. 887
NO BCM MESSAGES RECEIVED. 888
NO FCM MESSAGES RECEIVED. 889
NO PCM MESSAGES RECEIVED. 890
NO TCM MESSAGES RECEIVED 891
OTIS MODULE MESSAGE MISMATCH 892
OTIS MODULE MESSAGE MISMATCH (DIESEL) 894
*REPAIRING CMTC DISPLAYS DOUBLE DASH (- -) IN TEMP DISPLAY 896

PARK ASSIST SYSTEM
DISPLAY VOLTAGE SUPPLY SHORT TO GROUND 897
MODULE CALIBRATION MISMATCH 899
MODULE RAM ERROR 900
MODULE SOFTWARE MISMATCH 901
NO BCM DIMMING MESSAGES RECEIVED 902
NO BCM ODOMETER MESSAGES RECEIVED 902
NO BCM PARK BRAKE MESSAGES RECEIVED 902
NO PCM DISTANCE MESSAGES RECEIVED 904
NO PCM MESSAGES RECEIVED. 904
NO TCM MESSAGES RECEIVED. 906

PCI BUS INTERNAL FAULT 908
PCI BUS SHORT TO BATTERY. 908
PCI BUS SHORT TO GROUND. 908
REAR DISPLAY COMMUNICATION FAULT 910
REAR DISPLAY LED OR SPEAKER FAULT. 910
SENSOR 1 FAILURE 913
SENSOR 2 FAILURE 913
SENSOR 3 FAILURE 913
SENSOR 4 FAILURE 913
SENSOR 1 GROUND CIRCUIT OPEN 915
SENSOR 2 GROUND CIRCUIT OPEN 915
SENSOR 3 GROUND CIRCUIT OPEN 915
SENSOR 4 GROUND CIRCUIT OPEN 915
SENSOR 1 SIGNAL CIRCUIT SHORT TO VOLTAGE 918
SENSOR 2 SIGNAL CIRCUIT SHORT TO VOLTAGE 918
SENSOR 3 SIGNAL CIRCUIT SHORT TO VOLTAGE 918
SENSOR 4 SIGNAL CIRCUIT SHORT TO VOLTAGE 918
SENSOR 1 SIGNAL OR BATTERY CIRCUIT OPEN OR SHORT TO GROUND 921
SENSOR 2 SIGNAL OR BATTERY CIRCUIT OPEN OR SHORT TO GROUND 921
SENSOR 3 SIGNAL OR BATTERY CIRCUIT OPEN OR SHORT TO GROUND 921
SENSOR 4 SIGNAL OR BATTERY CIRCUIT OPEN OR SHORT TO GROUND 921
SENSOR VOLTAGE SUPPLY SHORT TO GROUND. 924

POWER DOOR LOCKS/RKE
DRIVER DOOR LOCK SWITCH INPUT OPEN OR SHORT TO VOLTAGE - BCM . .926
DRIVER DOOR LOCK SWITCH INPUT SHORT - BCM. 928
DRIVER DOOR LOCK SWITCH INPUT STUCK - BCM. 930
LEFT CYLINDER LOCK SWITCH INPUT SHORT - BCM 932
LEFT CYLINDER LOCK SWITCH INPUT STUCK - BCM 934
LEFT UNLOCK OUTPUT FAILURE - BCM 936
LIFTGATE POWER RELEASE OUTPUT SHORT - BCM. 938
LOCK OUTPUT FAILURE - BCM. 940
PASSENGER DOOR LOCK SWITCH INPUT OPEN OR SHORT TO VOLTAGE - BCM 943
PASSENGER DOOR LOCK SWITCH INPUT SHORT - BCM 945
PASSENGER DOOR LOCK SWITCH INPUT STUCK - BCM 947
RIGHT CYLINDER LOCK SWITCH INPUT SHORT - BCM (EXPORT ONLY - IF EQUIPPED) 949
RIGHT CYLINDER LOCK SWITCH INPUT STUCK - BCM (EXPORT ONLY - IF EQUIPPED) 951
RIGHT UNLOCK OUTPUT FAILURE - BCM. 953
*LEFT CYLINDER LOCK SWITCH INOPERATIVE. 955
*REMOTE KEYLESS ENTRY INOPERATIVE 957
*RIGHT CYLINDER LOCK SWITCH INOPERATIVE 959

POWER DOORS - LIFTGATE
AMBIENT TEMPERATURE SENSOR CIRCUIT OPEN 961
AMBIENT TEMPERATURE SENSOR CIRCUIT SHORT TO GROUND 963
CONTROL MODULE FAILURE - INTERNAL FAILURE 965
INCOMPLETE LATCH CINCH - NO PAWL TRANSITION 966
INCOMPLETE LATCH CINCH - OVERCURRENT 968
INCOMPLETE LATCH RELEASE - RATCHET SWITCH FAILURE 971
INCOMPLETE LATCH RELEASE- OVER CURRENT 973

INCOMPLETE LATCH RELEASE- PAWL SWITCH FAILURE 975
INCOMPLETE LATCH RELEASE- SECTOR GEAR RETURN FAILURE 977
INCOMPLETE POWER CLOSE - FULL OPEN SWITCH FAILURE/NON ENGAGEMENT 978
INCOMPLETE POWER CLOSE - EXCESSIVE H.E. COUNTS/NON ENGAGEMENT 980
INCOMPLETE POWER CLOSE - HALL EFFECT SIGNAL MISSING 984
INCOMPLETE POWER CLOSE - OVER CURRENT 987
INCOMPLETE POWER CLOSE - TRANSISTOR SHORTED. 990
INCOMPLETE POWER CLOSE - VOLTAGE BELOW MINIMUM LEVEL 992
INCOMPLETE POWER OPEN - FULL OPEN SWITCH FAILURE/NON ENGAGEMENT 994
INCOMPLETE POWER OPEN - EXCESSIVE H.E. COUNTS/NON ENGAGEMENT .996
INCOMPLETE POWER OPEN - HALL EFFECT SIGNAL MISSING 1000
INCOMPLETE POWER OPEN - OVERCURRENT. 1003
INCOMPLETE POWER OPEN - TRANSISTOR SHORTED. 1006
INCOMPLETE POWER OPEN - VOLTAGE BELOW MINIMUM LEVEL 1008
IOD WAKE UP OPEN - PLG - BCM 1010
LOOPBACK TEST FAILURE 1012
LOSS OF BCM MESSAGES 1013
LOSS OF EATX MESSAGES. 1014
LOSS OF SBEC MESSAGES 1015
OUTSIDE LIFTGATE HANDLE INPUT SHORT - BCM. 1016
OUTSIDE LIFTGATE HANDLE INPUT STUCK - BCM. 1017
OVERHEAD LIFTGATE SWITCH INPUT STUCK - BCM. 1018
OVERHEAD LIFTGATE/LOCKOUT SWITCHES OPEN OR SHT TO VOLTAGE - BCM. 1019
OVERHEAD LIFTGATE/LOCKOUT SWITCHES SHORT - BCM 1021
PINCH SENSOR CIRCUIT OPEN 1022
PINCH SENSOR SIGNAL CIRCUIT SHORT TO GROUND. 1025
PROP ROD FAILURE. 1027
*POWER LIFTGATE INOPERATIVE 1028

POWER DOORS - SLIDING
AMBIENT TEMPERATURE SENSOR CIRCUIT OPEN 1029
AMBIENT TEMPERATURE SENSOR CIRCUIT SHORT TO GROUND 1030
CONTROL MODULE FAILURE - INTERNAL FAILURE 1031
INCOMPLETE LATCH CINCH - NO PAWL TRANSITION 1032
INCOMPLETE LATCH CINCH - OVERCURRENT 1034
INCOMPLETE LATCH RELEASE - FULL OPEN SWITCH FAILURE 1036
INCOMPLETE LATCH RELEASE - RATCHET SWITCH FAILURE 1039
INCOMPLETE LATCH RELEASE- NO REVERSE TO UNLOAD CLUTCH. 1041
INCOMPLETE LATCH RELEASE- OVERCURRENT 1042
INCOMPLETE LATCH RELEASE- PAWL SWITCH FAILURE 1044
INCOMPLETE LATCH RELEASE- SECTOR GEAR RETURN FAILURE 1046
INCOMPLETE POWER CLOSE - FULL OPEN SWITCH FAILURE 1047
INCOMPLETE POWER CLOSE - EXCESSIVE HALL EFFECT SIGNAL 1049
INCOMPLETE POWER CLOSE - LATCH FAILURE. 1052
INCOMPLETE POWER CLOSE - OVERCURRENT. 1058
INCOMPLETE POWER CLOSE - TIME OUT 1060
INCOMPLETE POWER CLOSE - TRANSISTOR SHORTED. 1061
INCOMPLETE POWER CLOSE- VOLTAGE BELOW MINIMUM LEVEL. 1063
INCOMPLETE POWER OPEN - FULL OPEN SWITCH FAILURE. 1065

INCOMPLETE POWER OPEN - EXCESSIVE HALL EFFECT SIGNAL 1067
INCOMPLETE POWER OPEN - LATCH FAILURE. 1070
INCOMPLETE POWER OPEN - OVERCURRENT. 1075
INCOMPLETE POWER OPEN - TIME OUT 1077
INCOMPLETE POWER OPEN - TRANSISTOR SHORTED. 1078
INCOMPLETE POWER OPEN - VOLTAGE BELOW MINIMUM LEVEL 1080
IOD WAKE UP OPEN - PSD 1082
IOD WAKE UP PSD & PLG SHORT 1084
LEFT B-PILLAR SWITCH INPUT OPEN/SHORT TO VOLTAGE - BCM 1086
LEFT B-PILLAR SWITCH INPUT SHORT - BCM 1088
LEFT B-PILLAR SWITCH INPUT STUCK - BCM 1089
LOOPBACK TEST FAILURE 1090
LOSS OF BCM MESSAGES 1091
LOSS OF EATX MESSAGES. 1092
LOSS OF FCM MESSAGES 1093
LOSS OF SBEC MESSAGES 1094
OVERHEAD LEFT SWITCH INPUT STUCK - BCM 1095
OVERHEAD RIGHT SWITCH INPUT STUCK - BCM. 1096
OVERHEAD RIGHT/LEFT SWITCHES SHORT - BCM 1097
RIGHT B-PILLAR SWITCH INPUT OPEN OR SHORT TO VOLTAGE - BCM 1098
RIGHT B-PILLAR SWITCH INPUT SHORT - BCM 1100
RIGHT B-PILLAR SWITCH INPUT STUCK - BCM 1101
*POWER SLIDING DOOR INOPERATIVE. 1102

POWER MIRROR
FOLD MIRROR OUTPUT FAILURE (EXPORT ONLY) 1103
PASSENGER MIRROR RELAY OUTPUT OPEN (EXPORT ONLY). 1105
PASSENGER MIRROR RELAY OUTPUT SHORT (EXPORT ONLY) 1107
UNFOLD MIRROR OUTPUT FAILURE (EXPORT ONLY) 1108
*BOTH MIRRORS DO NOT UNFOLD EXCEPT WITH EITHER FRONT DOOR (EXPORT ONLY) 1111
*BOTH POWER FOLDING MIRRORS DO NOT FOLD (EXPORT ONLY). 1112
*DRIVER FOLDING MIRROR DOES NOT FOLD (EXPORT ONLY) 1113
*PASSENGER FOLDING MIRROR DOES NOT FOLD (EXPORT ONLY) 1115

TELECOMMUNICATION
AMP MESSAGE NOT RECEIVED 1117
AUDIO HARDWARE MESSAGE NOT RECEIVED 1118
BLUETOOTH ERROR. 1119
FLASH CHECKSUM ERROR 1119
FLASH WRITE ERROR. 1119
PCI BUS INTERNAL ERROR 1119
RAM WRITE ERROR 1119
ROM CHECKSUM ERROR. 1119
BODY STYLE MESSAGE NOT RECEIVED 1121
INVALID BODY STYLE 1121
GENERAL MICROPHONE FAULT 1122
IGNITION POWER MESSAGE NOT RECEIVED 1124
LEFT AUDIO INPUT SHORT TO GROUND 1125
LEFT AUDIO INPUT SHORT TO VOLTAGE 1125
LEFT AUDIO OUTPUT 1 SHORT TO GROUND. 1125
LEFT AUDIO OUTPUT 1 SHORT TO VOLTAGE 1125
MIRROR POWER CIRCUIT SHORT TO GROUND 1128

MIRROR POWER CIRCUIT SHORT TO VOLTAGE 1128
PCI BUS BUSY 1130
PCI BUS CIRCUIT OPEN 1130
PCI BUS CIRCUIT SHORT TO GROUND 1130
PCI BUS CIRCUIT SHORT TO VOLTAGE. 1130
PHONE SWITCH STUCK 1132
VOICE RECOGNITION SWITCH STUCK 1132
VOICE RECOGNITION/PHONE SWITCH CIRCUIT RATIONALITY 1132
VOICE RECOGNITION/PHONE SWITCH CIRCUIT SHORT TO GROUND 1132
VOICE RECOGNITION/PHONE SWITCH CIRCUIT SHORT TO VOLTAGE 1132
PRNDL MESSAGE NOT RECEIVED 1136
RADIO MESSAGE NOT RECEIVED 1137
RIGHT AUDIO INPUT SHORT TO GROUND 1138
RIGHT AUDIO INPUT SHORT TO VOLTAGE 1138
RIGHT AUDIO OUTPUT 1 SHORT TO GROUND. 1138
RIGHT AUDIO OUTPUT 1 SHORT TO VOLTAGE 1138
RPM MESSAGE NOT RECEIVED 1141
VIN MESSAGE NOT RECEIVED 1142

TIRE PRESSURE MONITORING
INITIALIZATION FAULT - SKREEM 1143
TIRE SENSOR 1 HIGH PRESSURE ALERT - SKREEM 1143
TIRE SENSOR 1 LOW PRESSURE ALERT - SKREEM 1143
TIRE SENSOR 1 TRANSMIT FAILURE - SKREEM 1143
TIRE SENSOR 2 HIGH PRESSURE ALERT - SKREEM 1143
TIRE SENSOR 2 LOW PRESSURE ALERT - SKREEM 1143
TIRE SENSOR 2 TRANSMIT FAILURE - SKREEM 1143
TIRE SENSOR 3 HIGH PRESSURE ALERT - SKREEM 1143
TIRE SENSOR 3 LOW PRESSURE ALERT - SKREEM 1143
TIRE SENSOR 3 TRANSMIT FAILURE - SKREEM 1143
TIRE SENSOR 4 HIGH PRESSURE ALERT - SKREEM 1143
TIRE SENSOR 4 LOW PRESSURE ALERT - SKREEM 1143
TIRE SENSOR 4 TRANSMIT FAILURE - SKREEM 1143
PRNDL MESSAGE MISSING - SKREEM 1147
VEHICLE SPEED MESSAGE MISSING - SKREEM 1147
SENSOR 1 FAULT - SKREEM 1149
SENSOR 2 FAULT - SKREEM 1149
SENSOR 3 FAULT - SKREEM 1149
SENSOR 4 FAULT - SKREEM 1149
TIRE SENSOR 1 LOW BATTERY - SKREEM. 1149
TIRE SENSOR 2 LOW BATTERY - SKREEM. 1149
TIRE SENSOR 3 LOW BATTERY - SKREEM. 1149
TIRE SENSOR 4 LOW BATTERY - SKREEM. 1149

VEHICLE THEFT/SECURITY
BCM MESSAGES NOT RECEIVED (EXPORT ONLY) 1152
INTERNAL EEPROM WRITE ERROR (EXPORT ONLY) 1153
INTERNAL TRANSMIT FAILURE (EXPORT ONLY) 1154
INTERNAL ULTRASONIC FAULT (EXPORT ONLY) 1155
LOOPBACK ERROR (EXPORT ONLY) 1159
NO VALID MESSAGES RECEIVED (EXPORT ONLY) 1160
PCI BUS SHORTED TO BATTERY (EXPORT ONLY) 1161
PCI BUS SHORTED TO GROUND (EXPORT ONLY) 1162

PCM MESSAGES NOT RECEIVED (EXPORT ONLY) 1163
*ALARM TRIPS ON ITS OWN 1164
*HOOD DOES NOT TRIP VTSS (EXPORT ONLY) 1165
*LEFT FRONT DOOR DOES NOT TRIP VTSS. 1166
*LEFT SLIDING DOOR DOES NOT TRIP VTSS 1167
*LIFTGATE DOES NOT TRIP VTSS (EXPORT ONLY). 1168
*REPEATER LAMPS INOPERATIVE WITH ALARM (EXPORT ONLY) 1169
*RIGHT FRONT DOOR DOES NOT TRIP VTSS 1170
*RIGHT SLIDING DOOR DOES NOT TRIP VTSS 1171
*VTSS INDICATOR LAMP INOPERATIVE (EXPORT ONLY) 1172
*VTSS SIREN INOP (EXPORT ONLY). 1173
*VTSS WILL NOT ARM. 1175

WINDSHIELD WIPER & WASHER
FR WIPER HI-LO RELAY OPEN 1176
FR WIPER HI-LO RELAY SHORT TO BATT 1178
FRONT WASH SWITCH INPUT STUCK 1179
FRONT WIPER NOT PARKED. 1181
FRONT WIPER ON RELAY OPEN. 1183
FRONT WIPER ON RELAY SHORT TO BATT 1184
FRONT WIPER PARK SWITCH SHORT TO GND 1185
FRONT WIPER SWITCH MUX INPUT OPEN 1187
FRONT WIPER SWITCH MUX INPUT SHORT TO GROUND 1189
HEADLAMP WASHER RELAY OPEN 1191
HEADLAMP WASHER RELAY SHORT TO BATT 1193
HIGH VOLTAGE-DISABLE FRONT/REAR WASHERS 1194
REAR WASH SWITCH INPUT STUCK 1195
REAR WIPER OUTPUT OPEN 1196
REAR WIPER OUTPUT SHORT TO GROUND 1198
REAR WIPER SWITCH MUX INPUT OPEN 1200
REAR WIPER SWITCH MUX INPUT SHORT TO GROUND 1202
WASHER OUTPUT OPEN CIRCUIT 1204
WASHER OUTPUT SHORTED TO BATTERY 1207
WASHER OUTPUT SHORTED TO GROUND 1208

VERIFICATION TESTS
VERIFICATION TESTS 1210

8.0 COMPONENT LOCATIONS 1219

8.1 AIRBAG SYSTEM 1219
8.2 BODY CONTROL MODULE 1221
8.3 POWERTRAIN CONTROL MODULE - NGC. 1221
8.4 ENGINE CONTROL MODULE - DIESEL. 1222
8.5 HEATING & A/C. 1222
8.5.1 ACTUATORS – FRONT, LHD. 1222
8.5.2 ACTUATOR – FRONT, LHD 1223
8.5.3 ACTUATORS – FRONT, RHD 1224
8.5.4 ACTUATOR – FRONT, RHD. 1225
8.5.5 EVAPORATOR TEMPERATURE SENSOR, LHD, RG ATC & MTC . 1225
8.5.6 EVAPORATOR TEMPERATURE SENSOR, RHD 1226
8.5.7 EVAPORATOR TEMPERATURE SENSOR, LHD, RS ATC & MTC . 1226
8.5.8 C202 CONNECTOR 1227

8.5.9 ACTUATORS – REAR 1227
8.5.10 REAR A/C HEATER UNIT CONNECTOR 1227
8.5.11 DIESEL CABIN HEATER ASSIST (DCHA) ASSEMBLY 1228
8.5.12 C330 HARNESS CONNECTOR (DCHA) 1228
8.5.13 C331 HARNESS CONNECTOR (DCHA) 1229
8.6 INTEGRATED POWER MODULE & FRONT CONTROL MODULE – TYPICAL 1229
8.7 MEMORY SYSTEM 1230
8.7.1 MEMORY SEAT/MIRROR/ADJUSTABLE PEDALS MODULE/SEAT MOTORS 1230
8.7.2 MEMORY SEAT/MIRROR/ADJUSTABLE PEDALS MODULE CIRCUIT BREAKER 1230
8.8 OVERHEAD CONSOLE 1230
8.9 POWER FOLDING MIRRORS 1231
8.10 POWER LIFTGATE SYSTEM 1231
8.10.1 MODULE 1231
8.10.2 PINCH SENSORS (TAPE SWITCH) 1232
8.10.3 LATCH ASSEMBLY 1232
8.11 POWER DOOR LOCK/RKE SYSTEM 1232
8.11.1 DOOR LOCK MOTOR/AJAR SWITCH 1232
8.11.2 CYLINDER LOCK SWITCH 1233
8.11.3 SENTRY KEY REMOTE ENTRY MODULE 1233
8.12 POWER SLIDING DOOR 1233
8.12.1 MODULE 1233
8.12.2 LOWER DRIVE UNIT 1234
8.12.3 LATCH ASSEMBLY 1234
8.13 VEHICLE THEFT SECURITY SYSTEM 1234
8.13.1 THATCHAM ALARM MODULE (EXPORT ONLY) 1234
8.13.3 VTSS SIREN (EXPORT ONLY) 1235
8.13.4 FRONT INTRUSION SENSOR (EXPORT ONLY) 1235
8.13.5 REAR INTRUSION SENSOR (EXPORT ONLY) 1235

9.0 CONNECTOR PINOUTS 1237

A/C-HEATER CONTROL C1 (MTC) - BLACK/RED 20 WAY 1237
A/C-HEATER CONTROL C2 (MTC) - BLACK/BLUE 10 WAY 1237
ADJUSTABLE PEDALS RELAY (EXCEPT EXPORT/EXCEPT MEMORY) - 9 WAY . 1237
ADJUSTABLE PEDALS SENSOR (EXCEPT EXPORT) - 3 WAY 1238
ADJUSTABLE PEDALS SWITCH (EXCEPT EXPORT) - 4 WAY 1238
AMPLIFIER C1 (HIGHLINE AUDIO) - NATURAL 14 WAY 1239
AMPLIFIER C2 (HIGHLINE AUDIO) - 20 WAY 1240
ATC REMOTE SENSOR (ATC) - 4 WAY 1240
AUTO TEMP CONTROL C1 - NATURAL 13 WAY 1240
AUTO TEMP CONTROL C2 - BLACK 13 WAY 1241
AUTO TEMP CONTROL C3 - 4 WAY 1241
BELT TENSION SENSOR (OCCUPANT SENSING) - BLACK 3 WAY 1241
BLOWER MOTOR RESISTOR C1 (MTC) - BLACK 6 WAY 1241
BLOWER MOTOR RESISTOR C2 (MTC) - BLACK 2 WAY 1242
BODY CONTROL MODULE C1 - BLACK/BLACK 6 WAY 1242
BODY CONTROL MODULE C2 - BLACK/GREEN 34 WAY 1243
BODY CONTROL MODULE C3 - BLACK/WHITE 34 WAY 1244
BODY CONTROL MODULE C4 - BLACK/GRAY 34 WAY 1245
BODY CONTROL MODULE C5 - BLACK/BLACK 34 WAY 1246

BRAKE FLUID LEVEL SWITCH - 2 WAY 1246
C112 (GAS) - BLACK (BODY SIDE) 1247
C112 (GAS) - BLACK (FRONT END LIGHTING SIDE) 1247
C200 - GRAY (INSTRUMENT PANEL SIDE). 1250
C202 - GRAY (COMPONENT SIDE) 1252
C202 - GRAY (INSTRUMENT PANEL SIDE). 1252
C304 (LHD) - YELLOW (BODY SIDE). 1252
C304 (LHD) - YELLOW (SEAT SIDE) 1252
C305 - GRAY (BODY SIDE). 1253
C305 - GRAY (SEAT SIDE) 1253
C306 (RHD) - YELLOW (BODY SIDE) 1253
C306 (RHD) - YELLOW (SEAT SIDE) 1254
C307 - YELLOW (BODY SIDE) 1254
C307 - YELLOW (SEAT SIDE). 1255
C308 (EXCEPT SIDE AIRBAG) - GREEN (BODY SIDE) 1255
C308 (EXCEPT SIDE AIRBAG) - GREEN (LEFT DOOR WIRE TRACK ASSEMBLY SIDE) 1255
C308 (SIDE AIRBAG) - BLUE (BODY SIDE) 1256
C308 (SIDE AIRBAG) - BLUE (LEFT DOOR WIRE TRACK ASSEMBLY SIDE). . . .1256
C309 (EXCEPT SIDE AIRBAG) - GRAY (BODY SIDE) 1256
C309 (EXCEPT SIDE AIRBAG) - GRAY (RIGHT DOOR WIRE TRACK ASSEMBLY SIDE) 1257
C309 (SIDE AIRBAG) - GREEN (BODY SIDE). 1257
C309 (SIDE AIRBAG) - GREEN (RIGHT DOOR WIRE TRACK ASSEMBLY SIDE).1257
C311 (3 ZONE HVAC/EXCEPT SIDE AIRBAG) - GRAY (BODY SIDE). 1258
C311 (3 ZONE HVAC/EXCEPT SIDE AIRBAG) - GRAY (REAR A/C JUMPER SIDE) 1258
C311 (3 ZONE HVAC/SIDE AIRBAG) - GRAY (BODY SIDE). 1258
C311 (3 ZONE HVAC/SIDE AIRBAG) - GRAY (REAR A/C JUMPER SIDE) 1259
C312 (EXCEPT SIDE AIRBAG) - GRAY (BODY SIDE) 1259
C312 (EXCEPT SIDE AIRBAG) - GRAY (HEADLINER SIDE) 1260
C312 (SIDE AIRBAG) - (BODY SIDE) 1261
C312 (SIDE AIRBAG) - (HEADLINER SIDE). 1262
C314 - BLACK (BODY SIDE) 1263
C314 - BLACK (LIFTGATE SIDE) 1263
C315 (POWER LIFTGATE) - BLACK (BODY SIDE) 1264
C315 (POWER LIFTGATE) - BLACK (LIFTGATE SIDE) 1264
C316 (POWER SLIDING DOOR) - BLACK (LEFT DOOR WIRE TRACK ASSEMBLY SIDE) 1264
C316 (POWER SLIDING DOOR) - BLACK (LEFT SLIDING DOOR SIDE). 1264
C317 (POWER SLIDING DOOR) - BLACK (RIGHT DOOR WIRE TRACK ASSEMBLY SIDE) 1265
C317 (POWER SLIDING DOOR) - BLACK (RIGHT SLIDING DOOR SIDE) 1265
C324 (MANUAL SLIDING DOOR) - BLACK (LEFT DOOR WIRE TRACK ASSEMBLY SIDE) 1265
C324 (MANUAL SLIDING DOOR) - BLACK (LEFT MANUAL SLIDING DOOR SIDE) 1265
C325 (MANUAL SLIDING DOOR) - BLACK (RIGHT DOOR WIRE TRACK ASSEMBLY SIDE) 1266
C325 (MANUAL SLIDING DOOR) - BLACK (RIGHT MANUAL SLIDING DOOR SIDE) 1266
C330 (DIESEL) - LT. GRAY (CABIN HEATER JUMPER SIDE) 1266
C330 (DIESEL) - LT. GRAY (POWERTRAIN SIDE) 1266

C331 (DIESEL) - BLACK (CABIN HEATER COMPONENT SIDE) 1266
C331 (DIESEL) - BLACK (CABIN HEATER JUMPER SIDE) 1267
C332 (3 ZONE ATC) - BLACK (COMPONENT SIDE) 1267
C332 (3 ZONE ATC) - LT. GREEN (BODY SIDE) 1267
CABIN HEATER ASSIST C1 (DIESEL) - BLACK 6 WAY 1267
CABIN HEATER ASSIST C2 (DIESEL) - BLACK 2 WAY 1268
CD CHANGER - 8 WAY 1268
CLOCKSPRING C2 - YELLOW 4 WAY 1268
CLOCKSPRING C3 - BLACK 4 WAY 1268
CONTROLLER ANTILOCK BRAKE - BLACK 24 WAY 1269
DATA LINK CONNECTOR - BLACK 16 WAY 1269
DOSING PUMP (DIESEL) - BLACK 2 WAY 1269
DRIVER AIRBAG SQUIB 1 - BROWN/YELLOW 2 WAY 1270
DRIVER AIRBAG SQUIB 2 - BLACK/YELLOW 2 WAY 1270
DRIVER BLEND DOOR ACTUATOR - GRAY 2 WAY 1270
DRIVER DOOR LOCK SWITCH - BLACK 3 WAY 1270
DRIVER KNEE BLOCKER AIRBAG SQUIB (LHD) - YELLOW 4 WAY 1271
DRIVER POWER SEAT FRONT RISER MOTOR - RED 2 WAY 1271
DRIVER POWER SEAT FRONT RISER POSITION SENSOR - BLACK 3 WAY . . . 1271
DRIVER POWER SEAT HORIZONTAL MOTOR - BLACK 2 WAY 1271
DRIVER POWER SEAT HORIZONTAL POSITION SENSOR - BLACK 3 WAY 1272
DRIVER POWER SEAT REAR RISER MOTOR - RED 2 WAY 1272
DRIVER POWER SEAT REAR RISER POSITION SENSOR - BLACK 3 WAY. 1272
DRIVER POWER SEAT RECLINER MOTOR - GREEN 2 WAY 1272
DRIVER POWER SEAT RECLINER POSITION SENSOR - BLACK 3 WAY. 1273
DRIVER POWER SEAT SWITCH - GREEN 10 WAY 1273
DRIVER SEAT BELT SWITCH - WHITE 2 WAY 1273
DRIVER SEAT BELT TENSIONER - YELLOW 2 WAY 1274
DVD/CD CHANGER C1 - BLACK 16 WAY 1274
ENGINE CONTROL MODULE C1 (DIESEL) - BLACK 81 WAY. 1275
EVAPORATOR TEMPERATURE SENSOR - BLACK 2 WAY 1276
FRONT BLOWER MODULE C1 (ATC) - BLACK 4 WAY 1276
FRONT BLOWER MODULE C2 (ATC) - BLACK 2 WAY 1276
FRONT CONTROL MODULE - BLACK 49 WAY 1277
FRONT INTRUSION SENSOR (UNITED KINGDOM) - 3 WAY 1278
FRONT READING LAMPS/SWITCH - BLACK 6 WAY 1278
HANDS FREE MODULE C1 - 22 WAY 1278
HANDS FREE MODULE C2 - BLACK 10 WAY. 1278
HANDS FREE MODULE C3 - 10 WAY 1279
HEADLAMP SWITCH - BLACK 13 WAY 1279
HEADLAMP WASHER PUMP MOTOR (EXPORT) - BLACK 2 WAY. 1279
HIGH NOTE HORN - BLACK 2 WAY. 1279
HOOD AJAR SWITCH (EXPORT) - BLACK 2 WAY 1280
IGNITION SWITCH - BLACK 5 WAY 1280
INSTRUMENT CLUSTER - BLACK 13 WAY 1280
INSTRUMENT PANEL SWITCH BANK (EXCEPT HEATED SEATS) - 6 WAY 1281
FUSES (IPM) 1283
ACCESSORY RELAY 1283
DEFOGGER RELAY 1283
FRONT BLOWER MOTOR RELAY 1283
FRONT WIPER HIGH/LOW RELAY 1284
FRONT WIPER ON/OFF RELAY 1284
HEADLAMP WASHER RELAY (EXPORT) 1284

HORN RELAY 1284
PARK LAMP RELAY 1284
REAR BLOWER MOTOR RELAY (3 ZONE HVAC) 1284
INTEGRATED POWER MODULE C4 - BLUE 10 WAY 1285
INTEGRATED POWER MODULE C7 - 20 WAY 1285
LEFT B-PILLAR SWITCH (POWER SLIDING DOOR) - GRAY 3 WAY 1285
LEFT CINCH/RELEASE MOTOR (POWER SLIDING DOOR) - GRAY 4 WAY 1286
LEFT CURTAIN AIRBAG SQUIB - 2 WAY 1286
LEFT CYLINDER LOCK SWITCH (EXPORT) - BLACK 2 WAY 1286
LEFT FRONT DOOR AJAR SWITCH (BASE) - BLACK 2 WAY 1286
LEFT FRONT DOOR LOCK MOTOR/AJAR SWITCH (EXCEPT BASE) - BLACK 4 WAY 1287
LEFT FRONT IMPACT SENSOR (EXCEPT EXPORT) - 2 WAY 1287
LEFT FRONT IMPACT SENSOR (EXPORT) - BLACK 2 WAY 1287
LEFT FULL OPEN SWITCH (POWER SLIDING DOOR) - BLACK 2 WAY 1287
LEFT HEADLAMP (CARAVAN/VOYAGER EXCEPT EXPORT) - BLACK 3 WAY . . . 1288
LEFT HEADLAMP (TOWN AND COUNTRY) - GREEN 3 WAY 1288
LEFT POWER MIRROR - BLACK 12 WAY 1288
LEFT SIDE IMPACT SENSOR 1 (EXCEPT EXPORT) - 2 WAY. 1289
LEFT SIDE IMPACT SENSOR 1 (EXPORT) - BLACK 2 WAY 1289
LEFT SIDE IMPACT SENSOR 2 - 2 WAY 1289
LEFT SIDE IMPACT SENSOR 3 - BLACK 2 WAY 1289
LEFT SLIDING DOOR CONTROL MODULE C1 (POWER SLIDING DOOR) - BLACK 8 WAY 1290
LEFT SLIDING DOOR CONTROL MODULE C2 (POWER SLIDING DOOR) - 20 WAY 1290
LEFT SLIDING DOOR LATCH SENSING SWITCH (POWER SLIDING DOOR) - BLACK 6 WAY 1290
LEFT SLIDING DOOR LOCK MOTOR (POWER SLIDING DOOR) - BLACK 4 WAY 1291
LEFT SLIDING DOOR LOCK MOTOR/AJAR SWITCH (MANUAL SLIDING DOOR) - BLACK 4 WAY 1291
LEFT SLIDING DOOR MOTOR (POWER SLIDING DOOR) - BLACK 8 WAY 1291
LICENSE LAMP (POWER LIFTGATE) - DK. GRAY 8 WAY 1291
LICENSE LAMP (POWER RELEASE) - DK. GRAY 4 WAY 1292
LIFTGATE AJAR SWITCH (MANUAL RELEASE) - BLACK 2 WAY 1292
LIFTGATE AJAR SWITCH (POWER RELEASE) - BLACK 4 WAY 1292
LIFTGATE CINCH/RELEASE MOTOR (POWER LIFTGATE) - BLUE 7 WAY 1292
LIFTGATE LEFT PINCH SENSOR (POWER LIFTGATE) - BLACK 2 WAY. 1293
LIFTGATE RIGHT PINCH SENSOR (POWER LIFTGATE) - BLACK 2 WAY 1293
MEMORY SEAT/MIRROR/ADJUSTABLE PEDALS MODULE C1 - GRAY 26 WAY . 1294
MEMORY SEAT/MIRROR/ADJUSTABLE PEDALS MODULE C2 - GRAY 16 WAY . 1294
MEMORY SEAT/MIRROR/ADJUSTABLE PEDALS MODULE C3 - WHITE 12 WAY 1295
MEMORY SEAT/MIRROR/ADJUSTABLE PEDALS MODULE C4 - GRAY 2 WAY . . 1295
MEMORY SET SWITCH - BLACK 2 WAY 1295
MESSAGE CENTER (EXPORT) - WHITE 14 WAY 1295
MODE DOOR ACTUATOR - GRAY 2 WAY 1296
MULTI-FUNCTION SWITCH - BLACK 4 WAY. 1296
OCCUPANT CLASSIFICATION MODULE - BLACK 18 WAY 1296
OCCUPANT RESTRAINT CONTROLLER C1 - YELLOW 32 WAY 1297
OCCUPANT RESTRAINT CONTROLLER C2 - YELLOW 32 WAY 1298
OVERHEAD CONSOLE (EXCEPT BASE) - BLACK 12 WAY 1298

PARK ASSIST DISPLAY - 3 WAY 1299
PARK ASSIST MODULE - 18 WAY 1299
PARK ASSIST SENSOR NO. 1 - 3 WAY 1299
PARK ASSIST SENSOR NO. 2 - 3 WAY 1299
PARK ASSIST SENSOR NO. 3 - 3 WAY 1300
PARK ASSIST SENSOR NO. 4 - 3 WAY 1300
PASSENGER AIRBAG - YELLOW 4 WAY 1300
PASSENGER AIRBAG ON/OFF INDICATOR LAMP - BLACK 2 WAY 1300
PASSENGER BLEND DOOR ACTUATOR - GRAY 2 WAY 1300
PASSENGER DOOR LOCK SWITCH - BLACK 3 WAY 1301
PASSENGER FOLDING MIRROR RELAY (EXPORT) - BLUE 9 WAY 1301
PASSENGER SEAT BELT SWITCH (OCCUPANT SENSING) - YELLOW 2 WAY . . 1301
PASSENGER SEAT BELT TENSIONER - 2 WAY 1302
PASSENGER SEAT WEIGHT SENSOR - BLACK 3 WAY 1302
POWER FOLDING MIRROR SWITCH (EXPORT) - BLACK 2 WAY 1302
POWER LIFTGATE MODULE C1 - BLACK 8 WAY 1303
POWER LIFTGATE MODULE C2 - 20 WAY 1303
POWER LIFTGATE MOTOR - BLACK 10 WAY 1303
POWER MIRROR SWITCH - BLACK 13 WAY 1304
POWER SEAT CIRCUIT BREAKER (30A) - GRAY 2 WAY 1304
POWERTRAIN CONTROL MODULE C1 - BLACK 38 WAY 1305
POWERTRAIN CONTROL MODULE C4 - GREEN 38 WAY 1306
RADIO C1 - 22 WAY 1307
RADIO C2 (CD CHANGER) - 10 WAY 1307
RADIO C2 (HANDS FREE) - 10 WAY 1308
REAR A/C-HEATER UNIT (3 ZONE MTC) - LT. GREEN 10 WAY 1308
REAR AUTO TEMP CONTROL SWITCH (3 ZONE ATC) - BLACK 13 WAY 1308
REAR BLOWER FRONT CONTROL SWITCH (3 ZONE MTC) - BLACK 8 WAY . . . 1308
REAR BLOWER MOTOR POWER MODULE C1 (3 ZONE ATC) - RED/BLACK 4 WAY 1309
REAR BLOWER MOTOR POWER MODULE C2 (3 ZONE ATC) - BLACK 2 WAY . 1309
REAR BLOWER REAR CONTROL SWITCH C1 (3 ZONE MTC) - BLACK 4 WAY . 1309
REAR BLOWER REAR CONTROL SWITCH C2 (3 ZONE MTC) - BLACK 6 WAY . 1309
REAR INTRUSION SENSOR (UNITED KINGDOM) - 3 WAY 1310
REAR MODE MOTOR (3 ZONE ATC) - GRAY 2 WAY 1310
REAR TEMPERATURE MOTOR (3 ZONE ATC) - GRAY 2 WAY 1310
REAR VIEW MIRROR C1 (LUXURY) - BLACK 7 WAY 1310
REAR VIEW MIRROR C2 (HANDS FREE) - BLACK 12 WAY 1311
REAR WIPER MOTOR - 3 WAY 1311
RECIRCULATION DOOR ACTUATOR - GRAY 2 WAY 1311
RIGHT B-PILLAR SWITCH (POWER SLIDING DOOR) - GRAY 3 WAY 1311
RIGHT CINCH/RELEASE MOTOR (POWER SLIDING DOOR) - GRAY 4 WAY 1312
RIGHT CURTAIN AIRBAG SQUIB - 2 WAY 1312
RIGHT CYLINDER LOCK SWITCH (EXPORT) - BLACK 2 WAY 1312
RIGHT DOOR SPEAKER - 3 WAY 1312
RIGHT FOG LAMP - BLACK 2 WAY 1313
RIGHT FRONT DOOR AJAR SWITCH (BASE) - BLACK 2 WAY 1313
RIGHT FRONT DOOR LOCK MOTOR/AJAR SWITCH (EXCEPT BASE) - BLACK 4 WAY 1313
RIGHT FRONT IMPACT SENSOR - BLACK 2 WAY 1313
RIGHT FRONT PARK/TURN SIGNAL LAMP - BLACK 3 WAY 1314
RIGHT FULL OPEN SWITCH (POWER SLIDING DOOR) - BLACK 2 WAY 1314
RIGHT HEADLAMP (CARAVAN/VOYAGER EXCEPT EXPORT) - BLACK 3 WAY . . 1314

RIGHT HEADLAMP (TOWN AND COUNTRY) - GREEN 3 WAY 1315
RIGHT POWER MIRROR - BLACK 12 WAY 1315
RIGHT REAR PILLAR SPEAKER (HIGHLINE AUDIO) - BLACK 2 WAY 1315
RIGHT REAR SPEAKER - 3 WAY 1315
RIGHT REMOTE RADIO SWITCH - BLACK 2 WAY 1316
RIGHT SIDE IMPACT SENSOR 1 (EXCEPT EXPORT) - 2 WAY 1316
RIGHT SIDE IMPACT SENSOR 1 (EXPORT) - BLACK 2 WAY 1316
RIGHT SIDE IMPACT SENSOR 2 - 2 WAY 1316
RIGHT SIDE IMPACT SENSOR 3 - BLACK 2 WAY 1317
RIGHT SLIDING DOOR CONTROL MODULE C1 (POWER SLIDING DOOR) - BLACK 8 WAY 1317
RIGHT SLIDING DOOR CONTROL MODULE C2 (POWER SLIDING DOOR) - 20 WAY 1317
RIGHT SLIDING DOOR LATCH SENSING SWITCH (POWER SLIDING DOOR) - BLACK 6 WAY 1318
RIGHT SLIDING DOOR LOCK MOTOR (POWER SLIDING DOOR) - BLACK 4 WAY . . 1318
RIGHT SLIDING DOOR LOCK MOTOR/AJAR SWITCH (MANUAL SLIDING DOOR) - BLACK 4 WAY 1318
RIGHT SLIDING DOOR MOTOR (POWER SLIDING DOOR) - BLACK 8 WAY 1318
SENTRY KEY REMOTE ENTRY MODULE (SKREEM) - BLACK 6 WAY 1319
SIREN (UNITED KINGDOM) - BLACK 4 WAY 1319
THATCHAM ALARM MODULE (UNITED KINGDOM) - BLACK 16 WAY 1319
TRACTION CONTROL SWITCH - BLACK 2 WAY 1319
TRANSMISSION CONTROL MODULE (DIESEL) - BLACK 1320
WASHER FLUID LEVEL SWITCH - BLACK 2 WAY 1321
WASHER PUMP MOTOR - BLACK 2 WAY 1321
WIPER MODULE - DK. GRAY 4 WAY 1321

10.0 SCHEMATIC DIAGRAMS 1323

10.1 ADJUSTABLE PEDALS SYSTEM 1323
10.1.1 NON-MEMORY 1323
10.1.2 MEMORY 1324
10.2 AIRBAG SYSTEM 1325
10.2.1 OCCUPANT RESTRAINT CONTROLLER - HIGH LINE 1325
10.2.2 OCCUPANT RESTRAINT CONTROLLER - LOW LINE 1326
10.2.3 OCCUPANT CLASSIFICATION SYSTEM 1327
10.3 AUDIO SYSTEM 1328
10.3.1 PREMIUM AUDIO SYSTEM 1328
10.3.2 BASE AUDIO SYSTEM 1329
10.3.3 CD CHANGER 1330
10.3.4 DVD/CD CHANGER 1330
10.3.5 REMOTE RADIO CONTROLS 1331
10.4 AUTOMATIC TEMPERATURE CONTROL SYSTEM 1332
10.4.1 FRONT ATC - LHD 1332
10.4.2 FRONT ATC - RHD 1333
10.4.3 REAR ATC - THREE ZONE 1334
10.5 CABIN HEATER 1335
10.5.1 DIESEL CABIN HEATER ASSIST (DCHA) 1335
10.6 COMMUNICATION 1336
10.6.1 PCM COMMUNICATION - NGC 1337
10.6.2 ECM & CABIN HEATER ASSIST COMMUNICATION - DIESEL ONLY 1337

10.7 DOOR AJAR SYSTEM 1338
10.7.1 DOOR AJAR SYSTEM WITH POWER SLIDING DOORS 1338
10.7.2 DOOR AJAR WITHOUT POWER SLIDING DOORS 1339
10.8 EXTERIOR LIGHTING 1340
10.9 IGNITION, POWER, ACCESSORY 1341
10.9.1 HORN SYSTEM 1341
10.9.2 IGNITION SWITCH 1342
10.9.3 INTEGRATED POWER MODULE/BODY CONTROL MODULE POWER AND GROUNDS 1343
10.10 INSTRUMENT CLUSTER 1344
10.10.1 INSTRUMENT CLUSTER — BASE 1344
10.10.2 INSTRUMENT CLUSTER & MESSAGE CENTER (EXPORT, LHD) 1345
10.10.3 INSTRUMENT CLUSTER & MESSAGE CENTER (EXPORT, RHD) 1346
10.11 INTERIOR LIGHTING 1347
10.12 MANUAL TEMPERATURE CONTROLS 1348
10.12.1 BASE MANUAL TEMPERATURE CONTROL SYSTEM, LHD 1348
10.12.2 BASE MANUAL TEMPERATURE CONTROL SYSTEM, RHD 1349
10.12.3 DUAL-ZONE & THREE-ZONE (FRONT) MANUAL TEMPERATURE CONTROL SYSTEM, LHD 1350
10.12.4 DUAL-ZONE (FRONT) MANUAL TEMPERATURE CONTROL SYSTEM, RHD 1351
10.12.5 THREE ZONE REAR MANUAL TEMPERATURE CONTROL SYSTEM 1352
10.12.6 FRONT BLOWER MOTOR - RS 1353
10.12.7 FRONT BLOWER MOTOR - RG 1354
10.12.8 REAR BLOWER MOTOR 1355
10.13 MEMORY SYSTEM 1356
10.14 OVERHEAD CONSOLE 1357
10.15 PARK ASSIST 1358
10.16 POWER DOOR LOCKS/RKE 1359
10.17 POWER FOLDING MIRROR 1360
10.17.1 LHD (EXPORT ONLY) 1360
10.17.2 RHD (EXPORT ONLY) 1361
10.18 POWER LIFTGATE SYSTEM 1362
10.19 POWER SLIDING DOOR SYSTEM 1363
10.19.1 LEFT POWER SLIDING DOOR 1363
10.19.2 RIGHT POWER SLIDING DOOR 1364
10.20 POWER SLIDING DOOR AND LIFTGATE SWITCHES 1365
10.21 REAR DEFOG/HEATED MIRROR 1366
10.22 TELECOMMUNICATION 1367
10.22.1 HANDS FREE PHONE - WITH CD CHANGER 1367
10.22.2 HANDS FREE PHONE - WITH DVD/CD CHANGER 1368
10.23 VEHICLE THEFT SECURITY SYSTEM 1369
10.23.1 THATCHAM ALARM SYSTEM (EXPORT ONLY) 1370
10.24 WIPERS - FRONT AND REAR 1371

11.0 CHARTS AND GRAPHS 1373

11.1 KDB LAB SCOPE PATTERN 1373
11.2 PCI BUS LAB SCOPE PATTERN 1374

NOTES

PCI bus (Programmable Communication Interface multiplex system). Through the PCI bus, information about the operation of vehicle components and circuits is relayed quickly to the appropriate modules. All modules receive all the information transmitted on the bus even though a module may not require all information to perform its function. It will only respond to messages "addressed" to it through binary coding process. This method of data transmission significantly reduces the complexity of the wiring in the vehicle and the size of wiring harnesses. All of the information about the functioning of all the systems is organized, controlled, and communicated by the PCI bus, which is described in the Communication Section of this general information.

3.1 ADJUSTABLE PEDALS SYSTEM

The Adjustable Pedals are designed to enable the fore and aft repositioning of the brake and accelerator pedals. This results in improved ergonomics in relation to the steering wheel for taller and shorter drivers. Being able to adjust the pedal positions also allows the driver to set steering wheel tilt and seat positions to the most comfortable position available. The positions can be adjusted without compromising safety or comfort in actuating the pedals. Repositioning the pedals does not change the effort required for actuation. Changing of pedal position is accomplished by means of a motor.

Operating the adjustable pedal switch activates the pedal drive motor. The pedal drive motor changes the position of the brake and accelerator pedals. The pedal can move rearward or forward. The pedals are moved to a position that is most comfortable for the driver. The accelerator and brake pedals are moved at the same rate to ensure synchronization. Neither the motor nor mechanisms are subject to mechanical stress of brake or accelerator application.

The adjustable pedals feature is available on a non-memory/memory-equipped vehicle. The non-memory system consists of a mechanical switch that allows pedal travel adjustment. The IPM controls the Fused B+ circuit voltage to the adjustable pedals switch through the adjustable pedals relay. The circuit opens when the IPM detects an active cruise control state or when the vehicle is in reverse. The adjustable pedals control switch is located on the right side steering column shroud. The switch is hardwired directly to the adjustable pedals motor. When the operator actuates the switch to adjust the pedals, voltage is applied to the adjustable pedals motor allowing adjustment. The memory system, known as the Memory Seat Mirror Adjustable Pedal Module (MSMAPM), is located under the driver's seat and controls the adjustable pedals. The adjustable pedals control switch is located on the right side steering column shroud. The switch is hardwired directly to the MSMAPM. When the operator actuates the switch to adjust the pedals, the MSMAPM controls the adjustable pedals motor movement with input from the adjustable pedals sensor. This sensor allows pedal adjustment and memory functions to be recalled from the driver door mounted memory buttons or the RKE transmitters. The adjustable pedals will not operate when in an active cruise control state or when the vehicle is in reverse.

3.2 AIRBAG SYSTEM/OCCUPANT RESTRAINT CONTROLLER SYSTEM AND OCCUPANT CLASSIFICATION SYSTEM

The Airbag System contains the following components: Occupant Restraint Controller (ORC), Airbag Warning Indicator, Clockspring, Driver and Passenger dual squib Airbags, Driver and Passenger Seat belt Tensioner (SBT), Driver and Passenger Hall-effect Seat Belt Buckle Switches (SBS), Left and Right Side Curtain Airbags, and Front and Side Impact Sensors. The ORC also monitors the Occupant Classification System (OCS) for the presence of a passenger in the front outer seat.

The Occupant Classification System contains the following components: Occupant Classification Module (OCM), Bladder and Sensor, Belt Tension Sensor, and Passenger Airbag off Indicator. The Occupant Restraint Controller (ORC) supports staged airbag deployment and remote impact sensing. Staged deployment is the ability to trigger airbag system squib inflators individually as needed to provide the appropriate restraint for the severity of the impact. The ORC has four major functions: PCI Bus communications, onboard diagnostics, impact sensing, and component deployment. The ORC also contains an energy-storage capacitor. This capacitor stores enough electrical energy to deploy the front airbag components for two seconds following a battery disconnect or failure during an impact. The ORC is secured to the floor panel transmission tunnel below the instrument panel inside the vehicle. The ORC cannot be repaired or adjusted. The ORC sends and/or receives PCI Bus messages with the Instrument Cluster (MIC), Body Control Module (BCM), and Powertrain Control Module (PCM). Diagnostic trouble codes will be set if the communication with these modules is lost or contains invalid information. The microprocessor in the ORC monitors the front impact sensor signals and the airbag system electrical circuits to determine the system readiness. If the ORC detects a monitored system fault, it sends a message to the instrument cluster via PCI bus to

turn on the Airbag Warning Indicator. The ORC can set both active and stored diagnostic trouble codes to aid in diagnosing system problems. See DIAGNOSTIC TROUBLE CODES in this section.

The ORC uses an internal accelerometer, two front sensors and six side impact sensors, to sense the rate of vehicle deceleration and provide verification of the direction and severity of an impact. A pre-programmed decision algorithm in the ORC microprocessor determines when the deceleration rate is severe enough to require airbag system protection. The ORC also uses the driver and passenger seat belt switch status (buckled or unbuckled) to determine the level of driver airbag deployment, low medium or high. When the programmed conditions are met, the ORC sends an electrical signal to deploy the appropriate airbag system components.

WARNING: THE AIRBAG SYSTEM IS A SENSITIVE, COMPLEX ELECTROMECHANICAL UNIT. BEFORE ATTEMPTING TO DIAGNOSE OR SERVICE ANY AIRBAG SYSTEM OR RELATED STEERING WHEEL, STEERING COLUMN, OR INSTRUMENT PANEL COMPONENTS YOU MUST FIRST DISCONNECT AND ISOLATE THE BATTERY NEGATIVE (GROUND) CABLE. WAIT TWO MINUTES FOR THE SYSTEM CAPACITOR TO DISCHARGE BEFORE FURTHER SYSTEM SERVICE. THIS IS THE ONLY SURE WAY TO DISABLE THE AIRBAG SYSTEM. FAILURE TO DO THIS CAN RESULT IS ACCIDENTAL AIRBAG DEPLOYMENT AND POSSIBLE PERSONAL INJURY OR DEATH.

WARNING: NEVER STRIKE OR KICK THE OCCCUPANT RESTRAINT CONTROLLER, AS IT CAN DAMAGE THE IMPACT SENSOR OR AFFECT ITS CALIBRATION. IF AN AIRBAG CONTROL MODULE IS ACCIDENTALLY DROPPED DURING SERVICE, THE MODULE MUST BE SCRAPPED AND REPLACED WITH A NEW UNIT. FAILURE TO TAKE THE PROPER PRECAUTIONS CAN RESULT IN ACCIDENTAL AIRBAG DEPLOYMENT AND PERSONAL INJURY OR DEATH.

The Airbag Warning Indicator is the only point at which the customer can observe symptoms of a system malfunction. Whenever the ignition key is turned to the run or start position, the ORC performs a lamp check by turning the Airbag Warning Indicator on for 6-8 seconds. After the lamp check, if the indicator turns off, it means that the ORC has checked the system and found it to be free of discernible malfunctions. If the lamp remains on, there could be an active fault in the system or the MIC lamp circuit may be internally shorted. If the lamp comes on and stays on for a period longer than 6-8 seconds then goes off, there is usually an intermittent problem in the system.

3.2.1 DRIVER AIRBAG

The airbag protective trim cover is the most visible part of the driver side airbag system. The protective trim cover is fitted to the front of the airbag module and forms a decorative cover in the center of the steering wheel. The module is mounted directly to the steering wheel. Located under the trim cover are the horn switch, the airbag cushion, and the airbag cushion supporting components. When supplied with the proper electrical signal, the inflator or inflators discharge the gas directly into the cushion. The airbag module cannot be repaired, and must be replaced if deployed or in any way damaged.

WARNING: THE DRIVER AIRBAG MODULE CONTAINS ARGON GAS PRESSURIZED TO OVER 17236.89 Kpa (2500 PSI). DO NOT ATTEMPT TO DISMANTLE AN AIRBAG MODULE OR TAMPER WITH ITS INFLATOR. DO NOT PUNCTURE, INCINERATE, OR BRING INTO CONTACT WITH ELECTRICITY. DO NOT STORE AT TEMPERATURE EXCEEDING 93°C (200°F). REPLACE AIRBAG SYSTEM COMPONENTS ONLY BUT INTERNAL DIFFERENCES MAY RESULT IN INFERIOR OCCUPANT PROTECTION. THE FASTENERS, SCREWS, AND BOLTS ORIGINALLY USED FOR THE AIRBAG SYSTEM COMPONENTS HAVE SPECIAL COATINGS AND ARE SPECIFICALLY DESIGNED FOR THE AIRBAG SYSTEM. THEY MUST NEVER BE REPLACED WITH ANY SUBSTITUTES. ANY TIME A NEW FASTENER IS NEEDED, REPLACE IT WITH THE CORRECT FASTENERS PROVIDED IN THE SERVICE PACKAGE OR SPECIFIED IN THE MOPAR PARTS CATALOG. FAILURE TO TAKE THE PROPER PRECAUTIONS CAN RESULT IN ACCIDENTAL AIRBAG DEPLOYMENT AND PERSONAL INJURY OR DEATH.

CAUTION: Deployed Front Air Bags may or may not have live pyrotechnic material within the air bag inflator. Do not dispose of Driver and Passenger Airbags unless you are sure of complete deployment. Please refer to the Hazardous Substance Control System for Proper Disposal. Dispose of deployed air bags in a manner consistent with state, provincial, local, and federal regulations. Use the following table to identify the status of the Airbag Squib.

AIRBAG SQUIB STATUS

(1) Using a DRBIII® read Airbag DTC's **If** the following active codes are present:

ACTIVE DTC	CONDITIONS	SQUIB STATUS
Driver Squib 1 open Driver Squib 2 open	Check the stored DTC's **AND IF** the stored minutes for both are within 15 minutes of each other.	Both Driver Squib 1 and 2 were used.
Driver Squib 1 open Driver Squib 2 open	Check the stored DTC's **AND IF** the stored minutes for Driver Squib 2 open is GREATER than the stored minutes for Driver Squib 1 by 15 minutes or more.	Driver Squib 1 was used; Driver Squib 2 is live.
Driver Squib 1 open Driver Squib 2 open	Check the stored DTC's **AND IF** the stored minutes for Driver Squib 1 open is GREATER than the stored minutes for Driver Squib 2 by 15 minutes or more.	Driver Squib 1 is live ; Driver Squib 2 was used.
If Driver Squib 1 open	**AND IF** Driver Squib 2 opens is NOT an active code.	Driver Squib 1 was used; Driver Squib 2 is live.
If Driver Squib 2 open	**AND IF** Driver Squib 1 open is NOT an active code.	Driver Squib 1 is live; Driver Squib 2 was used.

If neither of the following codes is an active code:

ACTIVE DTC	SQUIB STATUS
Driver squib 1 open	Status of Airbag is Unknown.
Driver Squib 2 open	

3.2.2 CLOCKSPRING

The clockspring is mounted on the steering column under the steering wheel. This assembly consists of a plastic housing which contains a flat, ribbon-like, electrically conductive tape that winds and unwinds with the steering wheel rotation. The clockspring is used to maintain a continuous electrical circuit between the instrument panel wiring and the driver airbag, the horn, and the vehicle speed control switches if equipped. The clockspring must be properly centered when it is reinstalled on the steering column following any service procedure, or it could be damaged. The clockspring cannot be repaired and it must be replaced.

3.2.3 PASSENGER AIRBAG

The front passenger airbag is equipped with dual stage squib inflators. When supplied with the proper electrical signal the inflator or inflators discharge the gas directly into the cushion. The airbag module cannot be repaired, and must be replaced if deployed or in any way damaged.

WARNING: THE PASSENGER AIRBAG MODULE CONTAINS INERT GAS PRESSURIZED TO 17236.89 Kpa (2500 PSI). DO NOT ATTEMPT TO DISMANTLE AN AIRBAG MODULE OR TAMPER WITH ITS INFLATOR. DO NOT PUNCTURE, INCINERATE, OR BRING INTO CONTACT WITH ELECTRICITY. DO NOT STORE AT TEMPERATURE EXCEEDING 93°C (200°F). REPLACE AIRBAG SYSTEM COMPONENTS ONLY WITH PARTS SPECIFIED IN THE MOPAR PARTS CATALOG. SUBSTITUTE PARTS MAY APPEAR INTERCHANGEABLE, BUT INTERNAL DIFFERENCES MAY RESULT IN INFERIOR OCCUPANT PROTECTION. THE FASTENERS, SCREWS, AND BOLTS ORIGINALLY USED FOR THE AIRBAG SYSTEM COMPONENTS HAVE SPECIAL COATINGS AND ARE SPECIFICALLY DESIGNED FOR THE AIRBAG SYSTEM. THEY MUST NEVER BE REPLACED WITH ANY SUBSTITUTES. ANY TIME A NEW FASTENER IS NEEDED, REPLACE IT WITH THE CORRECT FASTENERS PROVIDED IN THE SERVICE PACKAGE OR SPECIFIED IN THE MOPAR PARTS CATALOG. FAILURE TO TAKE THE PROPER PRECAUTIONS CAN RESULT IN ACCIDENTAL AIRBAG DEPLOYMENT AND PERSONAL INJURY OR DEATH.

CAUTION: Deployed Front Air Bags may or may not have live pyrotechnic material within the air bag inflator. Do not dispose of Driver and Passenger Airbags unless you are sure of complete deployment. Please refer to the Hazardous Substance Control System for Proper Disposal. Dispose of deployed air bags in a manner consistent with state, provincial, local, and federal regulations. Use the following table to identify the status of the Airbag Squib.

AIRBAG SQUIB STATUS

(1) Using a DRBIII® read Airbag DTC's **If** the following active codes are present:

ACTIVE DTC	CONDITIONS	SQUIB STATUS
Passenger Squib 1 open Passenger Squib 2 open	Check the stored DTC's **AND IF** the stored minutes for both are within 15 minutes of each other.	Both Passenger Squib 1 and 2 were used.
Passenger Squib 1 open Passenger Squib 2 open	Check the stored DTC's **AND IF** the stored minutes for Passenger Squib 2 open is GREATER than the stored minutes for Passenger Squib 1 by 15 minutes or more.	Passenger Squib 1 was used; Passenger Squib 2 is live.
Passenger Squib 1 open Passenger Squib 2 open	Check the stored DTC's **AND IF** the stored minutes for Passenger Squib 1 open is GREATER than the stored minutes for Driver Squib 2 by 15 minutes or more.	Passenger Squib 1 is live; Driver Squib 2 was used.
If Passenger Squib 1 open	**AND IF** Passenger Squib 2 open is NOT an active code.	Passenger Squib 1 was used; Passenger Squib 2 is live.
If Passenger Squib 2 open	**AND IF** Passenger Squib 1 open is NOT an active code.	Passenger Squib 1 is live; Passenger Squib 2 was used.

If neither of the following codes is an active code:

ACTIVE DTC	SQUIB STATUS
Passenger squib 1 open	Status of Airbag is Unknown.
Passenger squib 2 open	

3.2.4 SEAT BELT TENSIONER (SBT)

The driver and passenger seat belt (buckle) tensioners are mounted to the inboard side of the front seats. The seat belt buckle and seat belt switch are connected directly to the seat belt tensioner cable. At the onset of an impact event the ORC uses the seat belt tensioner to rapidly retract the seat belt buckles. With the slack removed, the occupant's forward motion in an impact will be reduced as will the likelihood of contacting interior components. The seat belt tensioner cannot be repaired, if damaged or defective it must be replaced. The ORC continously monitors the resistance of the seat belt tensioner circuits for open and shorted conditions.

3.2.5 SEAT BELT SWITCHES (SBS)

The hall-effect driver and passenger seat belt switches provide the seat belt status, buckled or unbuckled, via hardwired inputs to the ORC. If the seat belt switch is damaged or defective the seat belt tensioner must be replaced. The ORC continuously monitors the seat belt switch circuits for open and shorted conditions.

3.2.6 DRIVER KNEE BLOCKER AIRBAG

The most visible part of the Driver Knee Blocker Airbag is the knee blocker trim cover. The knee blocker trim cover and airbag are mounted directly to the instrument panel structure below the steering column. When supplied with the proper electrical signal, the inflator discharges the gas directly into the airbag. The airbag cannot be repaired, and must be replaced if deployed or in any way damaged.

WARNING: DO NOT ATTEMPT TO MODIFY ANY PART OF YOUR ADVANCED AIRBAG SYSTEM. THE AIRBAG MAY INFLATE ACCIDENTALLY OR MAY NOT FUNCTION PROPERLY IF MODIFICATIONS ARE MADE. TAKE YOUR VEHICLE TO AN AUTHORIZED DEALER FOR ANY ADVANCED AIRBAG SYSTEM SERVICE. IF YOUR'E SEAT INCLUDING YOUR TRIM COVER AND CUSHION NEEDS TO BE SERVICED IN ANY WAY (INCLUDING REMOVAL OR LOOSENING/TIGHTENING OF SEAT ATTACHMENT BOLTS), TAKE THE VEHICLE TO YOUR AUTHORIZED DEALER. ONLY MANUFACTURER APPROVED SEAT ACCESSORIES MAY BE USED. CONTACT YOUR AUTHORIZED DEALER F IT IS NECESSARY TO MODIFY AN ADVANCED AIRBAG SYSTEM FOR PERSONS WITH DISABILITIES.

WARNING: NEVER STRIKE OR KICK THE AIRBAG CONTROL MODULE, AS IT CAN DAMAGE THE IMPACT SENSOR OR AFFECT ITS CALIBRATION. IF AN AIRBAG CONTROL MODULE IS ACCIDENTALLY DROPPED DURING SERVICE, THE MODULE MUST BE SCRAPPED AND REPLACED WITH A NEW UNIT. FAILURE TO TAKE THE PROPER PRECAUTIONS COULD RESULT IN ACCIDENTAL AIRBAG DEPLOYMENT AND PERSONAL INJURY OR DEATH.

3.2.7 FRONT AND SIDE IMPACT SENSOR

The front and side impact sensors are electronic accelerometers that sense the rate of vehicle deceleration, and combined with the ORC Accelerometer Sensor provides verification of the direction and severity of an impact. Each sensor also contains an electronic communication chip that allows the unit to communicate the sensor status as well as sensor fault information to the microprocessor in the Occupant Restraint Controller. The ORC microprocessor continuously monitors all of the front and side passive restraint system electrical circuits to determine the system readiness. If the ORC detects a system fault, it sets a Diagnostic Trouble Code and controls the airbag indicator operation accordingly. The impact sensors each receive battery current and ground through dedicated left and right sensor signal and ground circuits from the ORC. The impact sensors and the ORC communicate by modulating the voltage in the sensor signal circuit. If the sensor is dropped it must be replaced.

CAUTION: Do not remove or install the impact sensors while the sensor is connected to the vehicle wiring.

3.2.8 OCCUPANT CLASSIFICATION SYSTEM

A non-calibrated Occupant Classification Module (OCM) is the only component of the Occupant Classification System (OCS) that is available for separate service replacement, as outlined in the procedures that follow. The OCS components of the passenger side front seat cushion including the cushion frame, springs, pad, seat weight bladder and pressure sensor, seat cushion foam and the OCM are a factory-calibrated and assembled unit. Once this unit is connected to a vehicle electrically, the calibration settings are uploaded from

the OCM and stored in the memory of the Airbag Control Module (ORC). If only the OCM is subsequently replaced, the new, non-calibrated OCM learns the proper calibration settings from the ORC after it is connected to the vehicle electrically. If any of the remaining OCS components of the passenger side, front seat cushion require replacement, they are serviced only as a factory calibrated, assembled, and tamper-evident service replacement package. This package includes the assembled frame, springs, pad, seat weight bladder and pressure sensor, foam, wiring and a calibrated OCM. When installing this package, always replace all of the existing components with the new components as a unit. Do not attempt to separate or disconnect any of the new OCS components contained in the service replacement package from each other, and do not attempt to reuse any of the replaced components in this or any other vehicle. Once any of the original factory-installed components except the OCM have been replaced with the service replacement package components, the OCM can only be serviced by replacing the entire passenger side front seat cushion unit with another complete service replacement package.

CAUTION: On vehicles equipped with the Occupant Classification System (OCS), never replace both the Airbag Control Module (ORC) and the Occupant Classification Module (OCM) at the same time. If both require replacement, replace one. Then perform the supplemental restraint verification test before replacing the other. Both the ORC and the OCM store OCS calibration data, which they transfer to one another when one of them is replaced. If both are replaced at the same time, an irreversible fault will be set in both modules.

The OCM is subsystem of the Airbag Control Module (ORC). Therefore the OCM bus message updates the ORC with the front passenger seat information via PCI Bus message. The ORC then controls the Passenger Off indicator and the Airbag Warning Indicator to provide system onboard diagnostic feedback. All OCS wiring repairs are prohibited; when wiring problems are diagnosed a Bladder Repair Kit is the only approved repair.

PASSENGER AIRBAG OFF INDICATOR

Vehicles equipped with the Occupant Classification System (OCS) include a passenger airbag off indicator located in the Switch Bank in the center of the instrument panel. Vehicles without OCS have a blank lens installed in the instrument panel. At ignition on, for a system test, the ORC low side driver grounds a yellow Light Emitting Diode (LED) circuit causing the PASS AIRBAG OFF Indicator text and icon to be illuminated.

SEAT WEIGHT SENSOR

Vehicles equipped with the Occupant Classification System (OCS) have a seat weight bladder and pressure sensor unit that is integral to the passenger front seat cushion. The pressure sensor receives a nominal five volts and a ground through dedicated hardwired circuits from the OCM. The OCM then monitors the pressure sensor output voltage.

SEAT BELT TENSION SENSOR - BTS

The Belt Tension Sensor (BTS) is designed to measure belt tension as an input to a passenger Occupant Classification System (OCS). It is used to detect high cinch loads associated with child seats and compensate for the seat cushion load to correctly classify occupant size. When a load is applied to the seat belt, the belt tension sensor measures the load. As the load changes, the circuitry of the belt tension sensor changes the output voltage of the sensor. The belt tension sensor receives a nominal five volts and a ground through dedicated hardwired circuits from the OCM. The OCM then monitors the belt tension sensor output voltage on a dedicated hardwired data communication circuit. If the vehicle has experienced any impact(s) resulting in deployment of a pyrotechnic device of any kind (airbag, seatbelt tensioner, side curtain, etc.) within the vehicle, the entire passenger seat belt retractor assembly, including the BTS, shall be replaced. Additionally, if the seat belt webbing has become cut, frayed, or worn; or if the stitching has become damaged in any way, the entire passenger seat belt retractor assembly, including the BTS, shall be replaced. The belt tension sensor cannot be repaired and, if faulty or damaged, the entire passenger side front seat belt and retractor unit must be replaced. The OCM Verification Test will also provide a BTS Verification procedure to verify the BTS function. This verification procedure requires the Miller Special Tool #8828.

BLADDER REPAIR KIT

There are only three replaceable components in the OCS, Occupant Classification Module, Bladder Repair Kit and the Passenger Airbag OFF Indicator. The Bladder repair kit contains the OCS bladder, wire harnesses, pressure sensor (Seat Weight Sensor), module, seat cushion and other related structural and sound deadening components. The module and sensor connector must have a Tamper Evident material installed on the service kit module and sensor connectors. This material provides visible evidence that the assembly has been separated after the calibration process was completed. Do not install a Bladder Repair Kit if it appears that any of the components have been disconnected. The OCM can be replaced if the Airbag Control Module has uploaded the seat calibration into memory in a previous ignition cycle and the new OCM has a blank VIN and no calibration data stored in memory.

NOTE: An OCM can only be replaced in a passenger front seat if the seat is equipped with the original OCS module, bladder, sensor and wiring. NOTE: Servicing the OCS may create additional active and stored trouble codes that must be resolved before the vehicle can be returned to the owner. The OCS Verification Test will also set active DTCs if the procedure is not completed successfully.

The Miller Special Tool, MRL-9077 and the DRBIII® are needed to successfully complete the system Verification Test. The DRBIII® may report the following errors and failure messages during the procedure.

NEW DRBIII® FEATURES

ORC Menu

The DRBIII® ORC System Test screen will display the following:
[2]VIN verification -- Original VIN and Current VIN
[2]PCM Monitor - PCM Active On The Bus or PCM Not Active On The Bus
The DRBIII® ORC Input/Outputs screen will display the following:
[2]OCM Status:
Seat Class 0 (Empty)
Seat Cass 1 (Rear Facing Infant car Seat or RFIS)
Seat Class 2 (6 year old or Child)
Seat Class 3 (greater than or equal to 5th Percentile Female)
Seat Class 4 (less than 5th Percentile Female)
Seat Class 5 (Undetermined)
The DRBIII® ORC Miscellaneous screen will display the following:
[2]Configure Airbag On-Off Switch
1. No Airbag On-Off Switch
2. Pass OCM Only

OCS Menu

The DRBIII® OCM Input/Output screen will display the following:
[2]OCS Status --- 90, 919, 929, 939, 949, 959
The DRBIII® OCM Sensors screen will display the following:
[2]Bladder Output --- XXX A/D counts
[2]Pas BTS Output --- XXX A/D counts
The DRBIII® OCM OCS Info Monitor screen will display the following:
[2]Pass BTS -- Enabled or Disabled

System Verification

The DRBIII® OCM System Test screen will display the following
[2]PCM Monitor - PCM Active On The Bus or PCM Not Active On The Bus
[2]Clear VIN Mismatch - Clear VIN Mismatch Complete
[2]VIN Verification - Original VIN and Current VIN Clear VIN Mismatch
[2]OCS Verification - OCS Verification

Test process errors:

Test In Progress
Mode 33 Not Supported
Subfunction not supported
Test Busy - Repeat Test
Conditions for Test Not Correct
Routine Already Running
Routine was Never Started
Press any key to continue, then restart the verification test.

Test failed conditions:

Test Failed - Active DTCs Present
Test Failed - Seat is Empty
Test Failed - Seat Occupied
Test Failed - Weight Above Threshold
Test Failed - Weight Below Threshold
Test Failed - Temperature Out of Range
Test Failed - Seat Pressure Too High
Test Failed - Seat Pressure Too Low
Test Failed - Seat Pressure Not Stable
Test Failed - Temperature Out of Range
Test Failed - Seat Pressure Too Low
Test Failed - Power Up Time Too Short
Test Failed - Power Up Time Too Long
Test Failed - K Empty Count is 0
Test Failed - No EOL Calibration
Test Failed - K Allow is FF
Allow the vehicle seat and interior temperature to stabilize, check voltage supplies and repair any other active DTCs before restarting the System Verification test.
The OCS has been Verified or The OCS has NOT been Verified

WARNINGS:

WARNING: TO AVOID PERSONAL INJURY OR DEATH, TURN THE IGNITION OFF, DISCONNECT THE BATTERY AND WAIT TWO MINUTES BEFORE PROCEEDING.

WARNING: TO AVOID PERSONAL INJURY OR DEATH, TURN THE IGNITION ON, THEN RECONNECT THE BATTERY.

WARNING: TO AVOID PERSONAL INJURY OR DEATH ON VEHICLES EQUIPPED WITH THE OCCUPANT CLASSIFICATION SYSTEM (OCS), ONLY THE OCCUPANT CLASSIFICATION MODULE (OCM) AND THE PASSENGER SEAT BLADDER AND CUSHION SERVICE KIT ARE THE ONLY PARTS SERVICED.

WARNING: IF THE OCCUPANT CLASSIFICATION MODULE IS DROPPED AT ANY TIME, IT MUST BE REPLACED. FAILURE TO TAKE THE PROPER PRECAUTIONS CAN RESULT IN ACCIDENTAL AIRBAG DEPLOYMENT AND PERSONAL INJURY OR DEATH. TO AVOID PERSONAL INJURY OR DEATH ON VEHICLES EQUIPPED WITH THE OCCUPANT CLASSIFICATION SYSTEM (OCS), ONLY THE OCCUPANT CLASSIFICATION MODULE (OCM) AND THE SEAT CUSHION TRIM MAY BE SERVICED SEPARATELY. ALL OTHER COMPONENTS OF THE PASSENGER SIDE FRONT SEAT CUSHION ASSEMBLY MUST BE SERVICED ONLY AS A COMPLETE FACTORY-CALIBRATED, ASSEMBLED AND TAMPER-EVIDENT SERVICE REPLACEMENT PACKAGE. THIS PACKAGE INCLUDES THE FRAME, SPRINGS, PAD, BLADDER AND PRESSURE SENSOR, FOAM, WIRING AND A CALIBRATED OCM. WHEN INSTALLING THIS PACKAGE ALWAYS REPLACE ALL OF THE EXISTING COMPONENTS WITH THE NEW COMPONENTS AS A UNIT. DO NOT ATTEMPT TO SEPARATE OR DISCONNECT ANY OF THE NEW OCS COMPONENTS IN THE SERVICE REPLACEMENT PACKAGE FROM EACH OTHER, AND DO NOT ATTEMPT TO REUSE ANY OF THE REPLACED COMPONENTS IN THIS OR ANY OTHER VEHICLE. FAILURE TO TAKE THE PROPER PRECAUTIONS COULD RESULT IN FAILURE OF THE PASSENGER AIRBAG TO DEPLOY WHEN REQUIRED, OR IN PASSENGER AIRBAG DEPLOYMENT WHEN NOT REQUIRED.

3.2.9 SPECIAL TOOLS

Some airbag diagnostic tests will require the use of special tools, airbag load tools, 8443 for testing squib circuits and the Occupant Classification Seat Weight Tool 9077. The load tools contain fixed resistive loads, jumpers and adapters. The fixed loads are connected to cables and mounted in a storage case. The cables can be directly connected to some airbag system connectors. Jumpers are used to convert the load tool cable connectors to the other airbag system connectors. The adapters are connected to the module harness connector to open shorting clips and protect the connector terminal during testing. When using the load tool follow all of the safety procedures in the service information for disconnecting airbag system components. Inspect the wiring, connector and terminals for damage or misalignment. Substitute the airbag load tool in place of a Driver or Passenger Airbag, curtain airbag, clockspring, or seat belt tensioner (use a jumper if needed). Then follow all of the safety procedures in the service information for connecting airbag system components. Read the module active DTC's. If the module reports NO ACTIVE DTC's the defective component has been removed from the system and should be replaced. If the DTC is still active, continue this process until all components in the circuit have been tested. Then disconnect the module connector and connect the matching adapter to the module connector. With all airbags disconnected and the adapter installed the squib wiring can be tested for open and shorted conditions.

3.2.10 DIAGNOSTIC TROUBLE CODES

Airbag diagnostic trouble codes consist of active and stored codes. If more than one code exists, diagnostic priority should be given to the active codes. Each diagnostic trouble code is diagnosed by following a specific testing procedure. The diagnostic test procedures contain step-by-step instructions for determining the cause of the trouble codes. It is not necessary to perform all of the tests in this book to diagnose an individual code. Always begin by reading the diagnostic trouble codes with the DRBIII®. This will direct you to the specific test(s) that must be performed. In certain test procedures within this manual, diagnostic trouble codes are used as a diagnostic tool.

3.2.10.1 ACTIVE CODES

The code becomes active as soon as the malfunction is detected or key-on, whichever occurs first. An active trouble code indicates an on-going malfunction. This means that the defect is currently there every time the Occupant Restraint Controller checks that circuit or component. It is impossible to erase an active code. Active diagnostic trouble codes for the airbag system are not permanent and will change the moment the reason for the code is corrected. With the exception of the warning lamp trouble codes or malfunctions, when a malfunction is detected, the airbag lamp remains lit for a minimum of 12 seconds or as long as the malfunction is present.

3.2.10.2 STORED CODES

Airbag codes are automatically stored in the ORC's memory as soon as the malfunction is detected. A stored code indicates there was an active code present at some time. When a trouble code occurs, the Airbag Warning Indicator illuminates for 12 seconds minimum (even if the problem existed for less than 12 seconds). Once the code is no

longer active, the time in minutes it was active, and the number of times the ignition has been cycled since the problem was last detected will be displayed. The minimum time shown for any code will be one minute, even if the code was actually present for less than one minute. Thus, the time shown for a code that was present for two minutes 13 seconds, for example, would be three minutes. If a malfunction is detected a diagnostic trouble code is stored and will remain stored. When and if the malfunction ceases to exist, an ignition cycle count will be initiated for that code. If the ignition cycle count reaches 100 without a reoccurrence of the same malfunction, the diagnostic trouble code is erased and that ignition cycle counter is reset to zero. The ignition cycle counter will be reset and diagnostic trouble code will continue to be a stored code, If the malfunction reoccurs before the count reaches 100. If a malfunction is not active while performing a diagnostic test procedure, the active code diagnostic test will not locate the source of the problem. In this case, the stored code can indicate an area to inspect. Maintain a safe distance from all airbags while performing the following inspection. If no obvious problems are found, erase stored codes, and with the ignition on wiggle the wire harness and connectors, rotate the steering wheel from stop to stop. Recheck for codes periodically as you work through the system. This procedure may uncover a malfunction that is difficult to locate.

3.3 AUDIO SYSTEM

Some of the radios are on the PCI Bus system. The PCI Bus inputs into the radio are used for VF dimming, remote steering wheel controls and cabin EQ preference. PCI Bus outputs from the radio are used for the Name Brand Speaker (NBS) relay activation, as well as cabin EQ preference.

The radios have the capability of containing multiple vehicle unique equalization curves (cabin EQ preferences) within the radio. These curves will reside in the radio's flash memory. The radio is capable of storing up to 20 unique equalization curves. The latent curves can be selected via the Front Control Module transmitting a PCI Bus message to the radio in response to a radio request for equalization message. Upon receipt of a valid equalization select message response, the radio will switch to output the corresponding equalization curve.

All the radios are capable of displaying faults and allowing certain actuation tests through the use of the DRBIII®. When attempting to perform PCI Bus diagnostics, the first step is to identify the radio in use in the vehicle.

When trouble shooting output shorts or "output" error messages, the following applies:

On radios without an external amplifier, the term output refers to the path between the radio and the speaker. This type of circuit can be monitored all the way through the speaker connections by the radio assembly. When the radio displays a shorted output DTC with this type of system, the speaker, radio, or wiring could be at fault.

On radios with an external amplifier, the term "output" refers to the circuit between the radio connector and the amplifier. The radio is capable of monitoring only this portion and can tell nothing about the circuit between the amplifier and the speakers. Consequently, a shorted output DTC on this type of system would only refer to this circuit. A faulty speaker could not cause this DTC.

3.3.1 NAVIGATION RADIO

The optional navigation radio system receives GPS signals from up to eight satellites to display the position and direction of the vehicle. Map information is supplied through a DVD-ROM. An electronic gyrosensor and the vehicle's speed sensor enable the system to display the present vehicle position even in locations where GPS signals may be blocked.

When a destination is selected, the navigation system uses information from the map to quickly calculate a route. As the vehicle is driven along the chosen route, the operator is guided with pictorial displays and voice prompts. For complete operating instructions, refer to the manual included with the vehicle.

3.3.2 REMOTE RADIO CONTROLS

These radios can be controlled via remote radio switches (optional). These switches are located on the back side of the steering wheel. They control mode, preset, seek up, seek down, volume up and volume down functions.

These functions are inputs to the Body Control Module and can be read with the DRBIII® under "body computer". The switches are a multiplexed signal to the BCM. The radio control MUX circuit is a 5 volt line that is pulled to ground through different value resistors built into the switches. This causes a voltage drop to be seen by the BCM and it sends a specific message to the radio on the PCI Bus circuit. The radio then responses to the message.

This circuit is fairly simple to troubleshoot. The circuit must be complete from the switches in the steering wheel to the BCM. The ground must be complete so that the switches can cause the voltage drop for the BCM to see. The circuit passes through the clockspring so continuity through this devise must be verified.

3.3.3 CD CHANGER

The new in-dash CD Changer is designed to fit into the existing cubby bin in the center stack. This new cartridge-less CD Changer is controlled by your radio, and allows you to individually load up to four discs at a time. However, due to its compact design, the CD Changer can only carry out one operation at a time. For example, you can not load a new disc while playing another at the same time. Each operation happens sequentially.

The radio unit installed with your system provides control over all features of the CD Changer with the exception of the CD load and eject functions, which are controlled by buttons located on the front of the CD Changer. The radio also supplies the power, ground, PCI Bus, left and right speaker output through a single DIN cable. All features you would expect, such as Disc Up/Down, Track Up/Down, Random and Scan are controlled by the radio, which also displays all relevant CD Changer information on the radio display.

The CD Changer contains a Load/Eject button and an indicator light for each of the four disc positions. The individual light indicates whether a CD is currently loaded in that particular chamber of the CD Changer. Pressing the individual Load/Eject button for a particular chamber will eject a disc currently present in that chamber. If the chamber is currently empty, actuating the Load/Eject button will position that chamber to receive and load a new disc in that chamber.

3.3.4 DVD/CD CHANGER

The DVD/CD Changer (if equipped) is located in the instrument panel below the radio. The DVD/CD Changer can hold one DVD at a time. Three RCA jacks on the front of the unit will allow the use of MP3 players, video systems or camcorders.

3.4 BODY CONTROL MODULE

The body control module (BCM) supplies vehicle occupants with visual and audible information and controls various vehicle functions. To provide and receive information, the module is interfaced to the vehicle's serial bus communications network (PCI). This network consists of the powertrain control module (PCM), the engine control module (ECM) diesel, the mechanical instrument cluster (MIC), the front control module (FCM), the occupant restraint controller (ORC), the occupant classification module (OCM), the compass/mini-trip (CMTC), the electronic vehicle information center (EVIC), the controller antilock brake (CAB), the hands free module (HFM), the park assist module, the HVAC control module (ATC & MTC), the power sliding door (Left & Right) modules (PSD), the power liftgate module (PLG), the Audio system (which includes the Radio, DVD, CD Changer and Amplifier), the memory seat/mirror/adjustable pedals module (MSMAPM), the RKE/thatcham alarm module (export), the transmission control module (NAG1 and Diesel auto only) and the sentry key remote entry module (SKREEM). The BCM is operational when battery power is supplied to the module.

The body control module provides the following features:

- Power Door Locks
- Automatic Door Lock
- Door Lock Inhibit
- Central Locking (with VTSS Only)
- Battery Protection
- The BCM will automatically turn off all exterior lamps after 3 minutes and all interior lamps after 15 minutes after the ignition is turned off, if they are not turned off by the driver.
- Chime Driver
- Compass/Minitrip Support
- Interior Lighting (Courtesy/Reading Lamps)
- BCM Diagnostic Reporting
- Electronic Liftgate Release (with Power Door Locks)
- Exterior Lighting
- Headlamp Time Delay (with/without Autoheadlamps)
- Automatic Headlamps (with electrochromatic mirror)
- Illuminated Entry
- Fade to Off

This feature dims the interior lighting (courtesy lamps) gradually if the BCM does not receive any new inputs that would cause the interior lamps to remain on.

- PWM Instrument Panel Dimming
- Door Lock Inhibit

This feature disables the door lock functions if the key is in the ignition and either front door is ajar. Pressing the RKE lock/unlock button under these conditions, result in normal lock/unlock activation.

- Power Sliding Door Switch Inputs

The BCM has 4 switch inputs for the power sliding door feature: Located in the overhead console are the Left and Right side sliding door switches to activate either or both sliding doors under the proper conditions. Also there are B-Pillar switches located on the Left and Right B-pillar posts.

- Power Liftgate Switch Input

The BCM has 1 Liftgate switch input located in the overhead console

- Power Lockout Switch Input

The BCM has 1 Lockout switch that when enabled will disable the B-Pillar sliding door switches from activating either sliding door when depressed. When replacing a body control module there are 2 modules available, a Base and a Midline. The Midline controller is used on vehicles that have Power Door Locks. If a vehicle is equipped with the Vehicle Theft Security System, the midline controller becomes a premium when the theft feature is enabled.

NOTE: Do not swap the body control module between vehicles or body control modules off the shelf.

Engineering does not recommend that service, dealers or the plant swap Body Control Modules (BCM) between vehicles or off the shelf. The BCM has internal diagnostic capability that assists in diagnosing the system. When an "Open" or a "Short" circuit exists, the diagnostic tool can be used to read the BCM codes. The codes are very descriptive in identifying the appropriate feature that has faulted. The BCM also learns what features are on the vehicle and if modules are swapped the BCM could set false DTCs based on what it learned.

3.5 CHIME WARNING SYSTEM

The BCM monitors the door/liftgate ajar switches, multifunction switches, headlight switch, ignition switch, PCI bus, and the diagnostic tool to perform various chime operations. The BCM uses a low-side driver to control the chime located in the cluster.

The chime system provides the Driver with warning chimes for:

- Seat belt
- Exterior lights on
- Key-in Ignition
- Key-in Accessory
- Engine temperature critical
- Low washer fluid
- Turn signals on
- Dome light on
- Low oil pressure
- Any warning lamp announcement
- *High-speed warning Gulf Coast Countries (GCC) only*

The output sound intensity of the chime is approximately 72 decibels.

3.5.1 CHIME PRIORITY

The following list indicates the priority of the chime when more than one chime is active at the same time:

- Seat belt warning
- *High-speed warning Gulf Coast Countries (GCC) only*
- Turn signal on
- Chime request
- Warning lamp announcement

The cluster is responsible to set priority on all warning lamp announcement chimes.

3.5.2 CHIME ON CONDITIONS

The following is a list of the chime warnings and when they will sound.

Driver's Seat belt Unbuckled:	Sounds for approximately 6±2 seconds when the igntion is turned on and driver's seat belt is not buckled, as a reminder to the driver to buckle the seat belt.
Exterior Lights On:	Ignition is in the lock position, the driver door is ajar, and the headlight switch is left in any position, other than auto or off. The chime will sound as a warning to the driver until one of the above conditions is removed or until the battery protection time of 3 minutes has expired.
Key-In Ignition:	Ignition is in the lock position, driver door is ajar and the key is in the ignition. The chime will sound until one of the above conditions is removed or until the battery protection time of 15 minutes has expired.
Turn Signal On:	When the BCM detects a turn signal input continuously for 1.0mile/0.6km and the vehicle speed is greater than 15 mph/24kph, the chime will sound until the specific turn signal is cancelled.
Dome Lights On:	Ignition is in the lock position, driver door ajar, and the dome light switch is left in the on position. The chime will sound until one of the above conditions is removed or until the battery protection time of 15 minutes has expired.

Low Oil Pressure:	The chime will sound when the engine is operating and the oil pressure drops below 4psi/27.5kPa.
Engine Temperature Critical:	The chime will sound when the engine is operating and the coolant temperature exceeds 252°F/122C *or 234°/112C(diesel).* The chime is continuous at 257°F/125C and will chime for 4 minutes and stop if the temperature drops below 255°F/123C.
Low Washer Fluid	The chime will sound when the washer fluid drops below a specific level.
Warning Lamp Announcement:	A chime will sound to alert the driver to scan the instrument panel and overhead console to see which warning lamp is illuminated. The door/liftgate ajar warning lamp will appear without a chime if the vehicle is running and a door or the liftgate is opened. A chime will sound if the door or liftgate is still open and the vehicle speed is greater than 4mph/6kph.
High-speed warning Gulf Coast Countries (GCC) only	*The chime will sound, acting as a warning to the driver that the vehicle speed has exceed 75mph±2/120kph±3.*

3.5.3 WARNING LAMP ANNOUNCEMENT

Low Fuel Lamp:	The cluster will request a single chime after the indicator is illuminated.
Volt Lamp:	The cluster will request a single chime after the indicator is illuminated.
Oil Pressure Lamp:	The cluster will request a single chime after illuminating the indicator above 450rpm vehicle operation.
Liftgate Ajar Lamp:	The BCM determines when to chime for liftgate ajar.
Fasten Seat Belt Lamp:	The MIC will request a single chime from the BCM when the ignition is turned to the unlock/run/start positions if the driver seat belt is not buckled and 2 seconds after seatbelt warning chime ends.
Check Engine Lamp:	The cluster will request a single chime after the indicator is illuminated.
Low Washer Fluid Lamp:	The cluster will request a single chime after the indicator is illuminated.
Engine Temperature Lamp:	The cluster will request a single chime when the indicator is first illuminated at 252°F/122C.

3.5.4 OTHER CHIME ON CONDITIONS

Programming of an Additional Key Fob:	A single cluster chime will sound, which signals that the program mode has been initiated.
Programming for Rolling Door Locks:	When the programming has been completed, a single tone from the chime system, will occur.

3.6 COMMUNICATION

The Programmable Communication Interface or PCI Bus is a single wire multiplexed network capable of supporting binary encoded messages shared between multiple modules. The PCI bus circuit is identified as D25 and is white with a violet tracer. Additional tracer colors may be added to the violet in order to distinguish between different module connections. The modules are wired in parallel. Connections are made in the harness using splices. The following modules are used on the RS/RG:

- Body Control Module
- Front Control Module
- Occupant Restraint Controller
- Occupant Classification Module
- Controller Antilock Brake
- Powertrain Control Module (Gas)
- Transmission Control Module (NAG1 and Diesel Auto Only)
- Engine Control Module (Diesel)
- Radio
- Amplifier
- CD Changer
- DVD/CD Changer
- Hands Free Module
- Automatic Temperature Control Module
- A/C Heater Control Module (MTC)
- Sentry Key Remote Entry Module (SKREEM)
- Memory Seat/Mirror/Adjustable Pedals Module (MSMAPM)
- Overhead Console
- Mechanical Instrument Cluster
- Left Sliding Door Control Module
- Right Sliding Door Control Module
- Thatcham Alarm Module (Export)
- Power Liftgate Module
- Park Assist Module

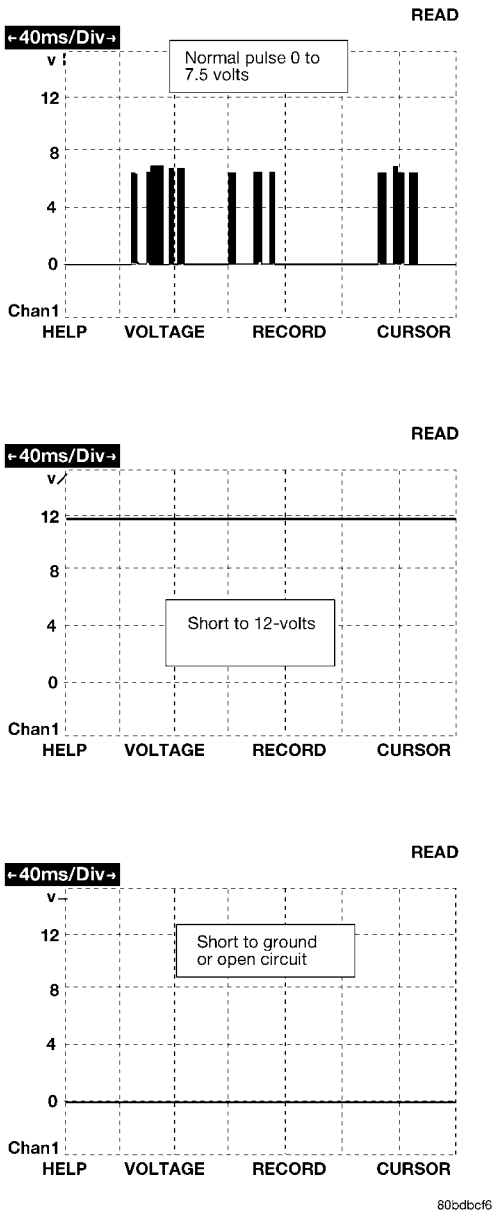

3.7 DOOR AJAR SYSTEM

The door ajar and liftgate ajar states are used as inputs for the Body Control Module (BCM). The BCM uses these inputs to determine exactly what position the doors and liftgate are in. The DRBIII® will display the state of the door ajar and the liftgate ajar switches in Inputs/Outputs. It's important to note, that when any door, or the liftgate is closed, the switch state on the DRBIII® will show OPEN. When any door, or the liftgate is open the switch state on the DRBIII® will show CLOSED. During diagnosis, if a door or the liftgate is closed and the DRBIII® displays the switch state as CLOSED, it indicates a shorted ajar circuit. If the door or the liftgate is open and the DRBIII® displays the switch state as OPEN, it indicates an open ajar circuit.

3.8 EXTERIOR LIGHTING SYSTEM

3.8.1 HEADLAMP POWER

The Headlamp Switch is a direct input to the BCM. The BCM sends a BUS message to the FCM informing it of a headlamp switch status change. The FCM then turns on power to the headlamps through four "fuseless" circuits. These circuits are electronically controlled and continuously monitored for malfunctions. Power is supplied to each filament in a separate circuit. For vehicles equipped with daytime running Lamps (DRL), the FCM electronically steps down the headlamp voltage to provide the desired illumination.

3.8.2 HEADLAMP SWITCH

The Headlamp Switch uses a multiplexed (MUX) circuit to the Body Control Module (BCM). The Headlamp Switch controls the Fog lamp relay, Park lamps and the Low and High headlamps. The BCM then sends a signal through the PCI Bus line to the FCM as to what state the switch has selected. The FCM energizes the high side output drivers to turn ON the desired lamps.

3.8.3 PARK LAMP RELAY

The Park Lamp Switch is a direct input to the BCM. The BCM sends a BUS message to the FCM informing it to turn on the park lamp relay. The park lamp relay is then powered through low side control of the FCM. This circuit is electronically controlled and continuously monitored for malfunctions.

3.8.4 FOG LAMP RELAY

The Fog Lamp switch is a direct input to the BCM. The BCM sends a BUS message to the FCM informing it to turn on the fog lamp relay. The fog lamp relay is then powered through low side control of the FCM. This circuit is electronically controlled and continuously monitored for malfunctions. Fog lamp functionality is not equipped on all vehicles. The FCM "learns" that the vehicle is equipped with fog lamps by reading the BCM BUS message.

3.8.5 FOG LAMPS

The BCM controls the operation of the fog lamp relay that turns the fog lamps ON and OFF. The Fog lamps can only be ON when the park and low beams are ON. If the high beams are switched ON then the Fog lamps will be automatically turned OFF.

3.8.6 EXTERIOR LIGHTING BATTERY SAVER

The BCM monitors the status of, and controls, the Park Lamps, Headlamps and Fog Lamp relays. If any exterior lamps are left ON after the ignition is turned OFF, the BCM will turn them OFF after 3 minutes.

3.8.7 AUTO HEADLAMPS

This feature is available on vehicles equipped with both the Electrocromatic Mirror (ECM) and the Compass/Mini-Trip Computer (CMTC). When the BCM detects a day/night signal from the CMTC, an ECM is present and Auto Headlamp mode is selected.

3.9 FRONT CONTROL MODULE

The Front Control Module (FCM) is an electrical control and interface center located in the engine compartment. When it is mated to the Power Distribution Center (PDC), it is referred to as the Integrated Power Module (IPM). The IPM, with its fuses and relays provides power and signal distribution throughout most of the vehicle. The FCM receives both hard wire and digital electronic inputs from the vehicle electrical system through the PDC. Based on these inputs and the ignition switch position, it provides direct power feeds and relay control to some of the vehicles' most critical electrical systems.

The Front Control Module provides the following features:

Controlled power feeds:

- Front airbag system
- Headlamp power
- EATX module power (4 speed only)
- Front washer motor
- Rear washer motor
- Cabin Heater
- Brake shift interlock system

Relay controls:

- Fog lamp relay (when equipped)
- Park lamp relay
- Front wiper on relay
- Front wiper high/low relay
- Accessory relay
- Horn relay
- Front & rear blower relay
- Name brand speakers (NBS) relay
- Adjustable pedals relay (non-memory)
- Electronic back light (EBL) run only relay

Electrical inputs:

- Headlamp battery supplies 1 & 2
- Module battery supply
- Power ground
- Ignition switch RUN or START position status
- Ignition switch START only status
- PCI Bus
- Stop lamp switch
- Horn switch
- Back-up switch
- Wiper park switch
- Washer fluid level switch
- Brake fluid level switch
- Ambient temperature sensor
- Right park lamp outage
- Left park lamp outage
- Battery IOD
- Battery (+) connection detection
- Flash reprogramming voltage

3.9.1 CONTROLLED POWER FEEDS

Front airbag system

The FCM provides power to the Occupant Restraint Control (ORC) system through two "fuseless" circuits (ORC RUN/START, and ORC RUN only). These circuits are electronically controlled and continuously monitored for malfunctions. Power is supplied while the ignition switch is in the RUN and START positions on pin 48 of the FCM connector, and in the RUN only position on pin 29.

Headlamp power

The headlamp switch is a direct input to the BCM. The BCM sends a PCI Bus message to the FCM informing it of a headlamp switch status change. The FCM then turns on power to the headlamps through four "fuseless" circuits. These circuits are electronically controlled and continuously monitored for malfunctions. Power is supplied to each filament in a separate circuit. For vehicles equipped with Daytime Running Lamps (DRL), the FCM electronically steps down the headlamp voltage to provide the desired illumination.

EATX power

The electronic automatic 4 speed transmission module is powered when the ignition switch is in the UNLOCK, RUN or START positions. This circuit is electronically controlled and continuously monitored for malfunctions. Power is supplied through pin 27 of the FCM connector.

Front washer motor

The front washer switch is a direct input to the BCM. The BCM sends a PCI Bus message to the

FCM informing it of a request to wash. The front washer motor is then powered through low side control inside the FCM. This circuit is electronically controlled and continuously monitored for malfunctions. In addition, the FCM electronically protects the washer motor from system voltages higher than 16 volts by automatically switching off the low side circuit.

Rear washer motor

The rear washer switch is a direct input to the BCM. The BCM sends a PCI Bus message to the FCM informing it of a request to wash. The rear washer motor is then powered through low side control inside the FCM. This circuit is electronically controlled and continuously monitored for malfunctions. In addition, the FCM electronically protects the washer motor from system voltages higher than 16 volts by automatically switching off the low side circuit.

Cabin Heater

When the ignition is in Run, the FCM monitors the PCI bus for the Cabin Heater Activation request. The Automatic or Manual Temperature Control initiates this request only when all conditions for the Cabin Heater activation are favorable. The request carries the status bit that the FCM requires to activate its Cabin Heater Assist Control output. This output is a low side driver (coming from FCM pin 15) which supplies a ground signal to the Cabin Heater (pin 5). When the Cabin Heater receives this ground signal input, it interprets this as an activation signal. The FCM low side driver is also capable of diagnostic sensing. The driver will sense an open circuit when the driver is off, and will sense a short to voltage when the driver is on. The FCM will set DTCs for both of these types of faults. For additional information, refer to Cabin Heater under General Information and Diagnostic Procedures in the manual.

Brake shift interlock system

The brake shift interlock solenoid receives power from both high side and low side controls inside the FCM. The high side control is on the same circuit as the EATX module power, and the low side control comes through pin 47 of the FCM connector. The solenoid is controlled by the low side driver when the brake pedal is pressed. Both circuits are continuously monitored for malfunctions.

3.9.2 RELAY CONTROLS

Fog lamp relay

The fog lamp switch is a direct input to the BCM. The BCM sends a PCI Bus message to the FCM informing it to turn on the fog lamp relay. The fog lamp relay is then powered through low side control of the FCM. This circuit is electronically controlled and continuously monitored for malfunctions. Fog lamp functionality is not equipped on all vehicles. The FCM “learns” that the vehicle is equipped with fog lamps by reading the BCM PCI Bus message.

Park lamp relay

The park lamp switch is a direct input to the BCM. The BCM sends a PCI Bus message to the FCM informing it to turn on the park lamp relay. The park lamp relay is then powered through low side control of the FCM. This circuit is electronically controlled and continuously monitored for malfunctions.

Front wiper on relay

The front wiper switch is a direct input to the BCM. The BCM sends a PCI Bus message to the FCM informing it to turn on the front wiper on relay. The front wiper on relay is then powered through low side control of the FCM. This circuit is electronically controlled and continuously monitored for malfunctions.

Front wiper high/low relay

The front wiper switch is a direct input to the BCM. The BCM sends a PCI Bus message to the FCM informing it to turn on the front wiper high/low relay. The relay switches power between the low speed and high speed windings of the wiper motor. The front wiper high/low relay is powered through low side control of the FCM. This circuit is electronically controlled and continuously monitored for malfunctions.

Accessory relay

The accessory relay works in conjunction with the FCM’s power accessory delay feature to control the operation of the radio, power windows, washer motors, wiper motors and power outlet. The accessory relay is turned on through low side control on pin 35 of the FCM. This circuit is electronically controlled and continuously monitored for malfunctions. Depending on the ignition switch position, the accessory relay will remain on or will time-out and turn off. The accessory relay remains on in the RUN and ACCY positions of the ignition switch. In the UNLK and OFF positions, the relay will remain energized for 45 seconds then turn off. During this time-out period, if the driver or passenger doors are opened, the relay will turn off immediately. While the ignition switch is in the START position, the relay will also drop-out, then resume operation. Accessory relay operation is most noticeable by observing the operation of the radio or blower functions.

Horn relay

The horn relay operates through a direct wire input to the FCM from the horn switch (FCM pin 17) , or a PCI Bus message from the BCM. The relay

responds to the horn switch, remote door lock and VTA alarm functions. The horn relay is powered through low side control on pin 10 of the FCM. Under normal operating conditions, if the horn is pressed for longer than 30 seconds, the FCM will automatically deactivate the horn to prevent damage to it. The FCM will re-activate control of the relay after a 25 second cool-down period. This circuit is electronically controlled and continuously monitored for malfunctions.

Front and rear blower relay

RS with MTC

Upon ignition on, the A/C-Heater Control Module sends a blower relay on request to the FCM over the PCI Bus. The front blower relay and the rear blower relay, if equipped, are then powered through low side control through FCM pin 30. The relay provides the high side to the blower motor, and the blower speed is governed through low side control in the A/C-Heater Control Module. This circuit is electronically controlled and continuously monitored for malfunctions.

RG with MTC

Upon power up (Power switch on), the A/C-Heater Control Module sends a blower relay on request to the FCM over the PCI Bus. The front blower relay is then powered through low side control through FCM pin 30. The relay provides the high side to the blower motor, and the blower speed is governed through low side control in the A/C-Heater Control Module. This circuit is electronically controlled and continuously monitored for malfunctions.

RS & RG with ATC

Upon power up (Power switch on), the Automatic Temperature Control (ATC) Module sends a blower relay on request to the FCM over the PCI Bus. The front blower relay and the rear blower relay, if equipped, are then powered through low side control through FCM pin 30. The relay provides the high side to the Blower Motor Power Module, and the blower speed is governed through control in the ATC Module. This circuit is electronically controlled and continuously monitored for malfunctions.

Name Brand Speakers (NBS) relay

The NBS relay operates through the vehicle bus interface between the radio and the FCM. When the radio is turned on, the radio sends a PCI Bus message to the FCM. The NBS relay is then powered on through low side control on pin 11 of the FCM. The relay supplies power to the amplified speaker, and ground is supplied through the radio. This circuit is electronically controlled and continuously monitored for malfunctions.

Electronic Back Light (EBL) relay

The rear defrost switch is part of the Automatic Temperature Control or A/C-Heater Control Module (Manual Temp). When the ignition switch is in the RUN position and the rear defrost switch is turned on, the ATC or A/C-Heater Control Module sends a PCI Bus message to the FCM. The EBL run only relay is then powered through low side control on pin 31 of the FCM. The relay provides the high side to the rear window defrost grid, and ground is attached to the vehicle body. The FCM will only allow the rear defrost to operate in the RUN position. This circuit is electronically controlled and continuously monitored for malfunctions.

Adjustable Pedals Relay (Non-Memory)

The Adjustable Pedals Relay is only on non-memory Adjustable Pedals System equipped vehicles. The relay is supplied battery voltage from the IPM and is electronically controlled with a low side driver within the FCM. The relay is energized when the transmission is in reverse and when cruise control operation is engaged. This action disables the Adjustable Pedals System from movement. This circuit is continuously monitored for proper function.

3.9.3 ELECTRICAL INPUTS

Headlamp battery supplies 1 & 2 — 12 volt input on pins 1 and 2. Battery supply voltage for switching headlamp circuits only.

Module battery supply — 12 volt input on pin 9. Battery supply voltage for all other FCM operations.

Power ground — Ground source on pin 8 for all FCM operations.

Ignition switch RUN or START position status — 12 volt input on pin 37. Allows the FCM to determine the ignition switch status for related FCM operations.

Ignition switch START only status — 12 volt input on pin 19. Allows the FCM to discriminate between RUN/START input and START for related FCM operations.

PCI Bus — Approximately 7.5 volt input on pin 22. Allows the FCM to communicate with other modules on the vehicle bus.

Stop lamp Switch status — 12 volt input on pin 44. Provides for brake shift interlock function.

Horn Switch — Ground input on pin 17. Primary means for engaging the horn.

Back-up switch — Ground input on pin 39. Input is converted to a PCI Bus status message for use by other modules.

Wiper park switch — Ground input on pin 16. Used to determine park placement of wipers. Also

used as feedback to FCM to determine correct operating mode of wipers.

Washer fluid level switch — Ground input to pull-up on pin 18. Ground is switched into the circuit when washer bottle fluid level is low.

Brake fluid level switch — Ground input to pull-up on pin 36. Ground is switched into the circuit when brake fluid level is low.

Ambient temperature sensor — Resistive input to pull-up on pin 25. Corresponding voltage level is converted to a PCI Bus message for use by other modules on the bus.

Right park lamp outage — 12 volt input on pin 21. Used to determine if right park lamp circuit is operating properly.

Left park lamp outage — 12 volt input on pin 41. Used to determine if left park lamp circuit is operating properly.

Battery IOD — 12 volt input on pin 20. The FCM enters a low power consumption mode when the ignition is turned OFF. This low current draw battery supply keeps the microprocessor functioning in the low power mode.

Battery (+) connection detection — 12 volt input on pin 38. The battery connection on the PDC incorporates the use of an internal switch to determine if the connector is properly mated and the Connector Positive Assurance (CPA) is engaged. If the CPA is not properly engaged, a voltage on pin 38 will be interpreted as an unseated connector and a fault will set.

Flash programming voltage — 20 volt input on pin 42. When a DRBIII® is connected and the proper flash reprogramming sequence is selected, the 20 volt signal will be applied through pin 42.

3.10 HEATING & A/C SYSTEM

3.10.1 AUTOMATIC TEMPERATURE CONTROL (ATC)

3.10.1.1 MODULE USAGE

CAUTION: Do not swap ATC Modules from vehicle to vehicle. Software versions differ between models and between model years. Installing a ATC Module with software that is incompatible for given vehicle can result in either improper or failed HVAC system operation.

3.10.1.2 SYSTEM AVAILABILITY

EXCEPT EXPORT

- The ATC system is a Three-Zone Air Conditioning System.

EXPORT

- Two different types of systems are currently available for these vehicles.
  - ► Dual-Zone Air Conditioning System for all except LWB vehicles.
  - ► Three-Zone Air Conditioning System for all LWB vehicles.

CABIN HEATER, EXPORT WITH DIESEL ENGINE

- A Cabin Heater is used in conjunction with the ATC system. The Cabin Heater is designed to supply the vehicle's occupants with heat prior to the engine reaching operating temperature. For additional information on this system, refer to Cabin Heater under General Information and Diagnostic Procedures in this manual.

3.10.1.3 SYSTEM CONTROLS

The ATC Module:

- is fully addressable with the DRBIII®.
- communicates over the Programmable Communication Interface Multiplex System (PCI) Bus.
- provides an A/C request over the PCI Bus to the Powertrain Control Module (PCM) when compressor operation is desired.
- for exports with diesel engines, provides a Cabin Heater activation request over the PCI Bus to the Front Control Module (FCM) when conditions are favorable for Cabin Heater operation.
- uses input from the evaporator temperature sensor to prevent evaporator freeze up while maintaining optimum cooling performance.
- uses input from infrared (I/R) sensors, which measure surface temperature, to maintain occupant comfort levels.
  - ► The I/R sensors are mounted in the instrument panel center bezel.
- can be operated in a manual mode.
- provides a blower relay on request over the PCI Bus to the Front Control Module (FCM) when blower operation is desired.
- controls front blower operating speed, providing 10 speeds in manual mode and infinite speeds in automatic mode.
- provides a cold engine blower lockout function.
  - ► A Blower Speed Clamping feature minimizes occupant discomfort by controlling the

- ► Dual-Zone Air Conditioning System
- ► Three-Zone Air Conditioning System

EXPORT

- Two different types of systems are currently available for these vehicles.
  - ► Single-Zone Air Conditioning System
  - ► Dual-Zone Air Conditioning System

CABIN HEATER, EXPORT WITH DIESEL ENGINE

- A Cabin Heater is used in conjunction with the HVAC system. The Cabin Heater is designed to supply the vehicle's occupants with heat prior to the engine reaching operating temperature. For additional information on this system, refer to Cabin Heater under General Information and Diagnostic Procedures in this manual.

3.10.2.3 SYSTEM CONTROLS

The A/C-Heater Control Module:

- is fully addressable with the DRBIII®.
- communicates over the Programmable Communication Interface Multiplex System (PCI) Bus.
- provides an A/C request to the Powertrain Control Module (PCM) over the PCI Bus when compressor operation is desired.
- uses input from the evaporator temperature sensor to prevent evaporator freeze up while maintaining optimum cooling performance.
- for exports with diesel engines, provides a Cabin Heater activation request to the Front Control Module (FCM) over the PCI Bus when conditions are favorable for Cabin Heater operation.
- for RS vehicles, provides a blower relay on request to the FCM over the PCI Bus upon ignition on.
- for RG vehicles, provides a blower relay on request to the FCM over the PCI Bus when the Power switch on the A/C-Heater Control Module is turned on.
- controls front blower operating speed. For RS vehicles, the four speed settings are Low, M1, M2, and High. For RG vehicles the five speed settings are Low, M1, M2, M3, and High.
- for RS vehicles uses the blower switch to control system on/off and blower speed.
- for RG vehicles uses the power switch to control system on/off and the blower switch to control blower speed.
- for RS vehicles uses the rear wiper/washer switch to control rear wiper/washer operation.
- for RS vehicles, provides a rear wiper on request to the Body Control Module (BCM) when rear wiper operation is desired.
- for RS vehicles, provides a rear washer on request to the Body Control Module (BCM) when rear washer operation is desired.
- controls EBL operation.
- on three-zone systems, activates and deactivates the Rear A/C-Heater Control.
- on three-zone systems, controls rear blower operating speed. The three speed settings are Low, Med, and High.
- controls the front and the three-zone system rear electric door actuators' operation.
  - ► A simplified control system for operation of the mode, recirculation, and temperature control actuators provides positive positioning without the complexity of feedback from position sensors. The A/C - Heater Control Module knows the number of operating actuator revolutions required for full door travel as well as the number of actuator commutator pulses per revolution. Using these parameters, the A/C - Heater Control Module runs the actuator for the number of commutator pulses that correspond to the desired door position. To maintain accuracy, the system recalibrates itself periodically at known zero and full travel conditions.

On Three-Zone systems, the Rear A/C-Heater Control:

- controls rear blower motor operating speed. The three blower speeds are Low, Med, and High.
- provides desired rear blend and mode door position input to the A/C-Heater Control Module.

The Single-Zone HVAC system uses:

- one, two-wire electric blend door actuator.
- one, two-wire electric mode door actuator.
- one, two-wire electric recirculation door actuator.

The Dual-Zone HVAC system uses:

- two, two-wire electric blend door actuators.
- one, two-wire electric mode door actuator.
- one, two-wire electric recirculation door actuator.

The Three-Zone HVAC system uses:

- two front, two-wire electric blend door actuators.
- one front, two-wire electric mode door actuator.
- one, two-wire electric recirculation door actuator.
- one rear, two-wire electric blend door actuator.
- one rear, two-wire electric mode door actuator.

CAUTION: To ensure a proper diagnosis, repair all Short Too Complex messages first, all rear door driver circuit related messages second, all common door driver circuit related messages third, and all front door driver circuit related messages last.

CAUTION: The DRBIII® can display up to three Actuator Circuit Test messages at a time. After repairing each Actuator Circuit Test message, cycle the ignition switch, then rerun the Actuator Circuit Test to ensure no new messages exist.

- The Short Too Complex message:
  - ► indicates that a specific determination of which lines are shorted could not be made.
  - ► is caused by more than three drivers being shorted in the same direction. For example, four drivers all shorted to ground, or two or more drivers shorted with at least one driver shorted to ignition/battery and one driver shorted to ground.
- Messages displaying:
  - ► XXX Driver/Circuit Shorted to Ignition/ Battery will set on a per-driver basis.
  - ► XXX Driver/Circuit Shorted to Ground will set on a per-driver basis.
  - ► the same two drivers/circuits shorted to ignition/battery as-well-as shorted to ground indicates that two actuator driver circuits are shorted together.
- When the test returns passed, then troubleshooting should proceed to clearing faults and running the HVAC Door Recalibration system test as a final check of system health.

3.11 CABIN HEATER

NOTE: The Cabin Heater, also known as the Diesel Cabin Heater Assist (DCHA), will be referred to as the DCHA throughout most of the General Information and the Diagnostic Procedures in this manual.

3.11.1 GENERAL SAFETY INFORMATION

WARNING: DO NOT OPERATE THE DCHA IN AN ENCLOSED AREA SUCH AS A GARAGE THAT DOES NOT HAVE EXHAUST VENTILATION FACILITIES. ALWAYS VENT THE DCHA's EXHAUST WHEN OPERATING THE DCHA. REFER TO 3.10.3.1 VENTING THE DCHA'S EXHAUST FOR PROPER EXHAUST VENTING INSTRUCTIONS. FAILURE TO FOLLOW THESE INSTRUCTIONS CAN RESULT IN PERSONAL INJURY OR DEATH.

WARNING: ALLOW THE DCHA ASSEMBLY TO COOL BEFORE PERFORMING A COMPONENT INSPECTION/REPAIR/REPLACEMENT. FAILURE TO FOLLOW THESE INSTRUCTIONS CAN RESULT IN PERSONAL INJURY OR DEATH.

WARNING: ALWAYS DISCONNECT THE VEHICLE'S BATTERY PRIOR TO PERFORMING ANY TYPE OF WORK ON THE DCHA. FAILURE TO FOLLOW THESE INSTRUCTIONS CAN RESULT IN PERSONAL INJURY OR DEATH.

WARNING: NEVER ATTEMPT TO REPAIR THE DCHA HEATER MODULE OR ANY OF ITS INTERNAL COMPONENTS. ALWAYS PERFORM DCHA COMPONENT REPLACEMENT IN ACCORDANCE WITH THE SERVICE INFORMATION. FAILURE TO FOLLOW THESE INSTRUCTIONS CAN RESULT IN PERSONAL INJURY OR DEATH.

CAUTION: Do not actuate the DCHA Field Mode Test with the engine off. Failure to follow these instructions can result in internal damage to the DCHA Heater Module.

CAUTION: Always Perform The Cabin Heater Pre-Test Prior To Performing Any Other Cabin Heater Test For The Test Result To Be Valid.

NOTE: Do not disconnect the vehicle's battery or the DCHA's main power-supply while the DCHA is in operation or in run-down mode. Failure to follow these instructions can result in excess emissions from the DCHA Heater Module.

NOTE: Failure to prime the Dosing Pump after draining the DCHA fuel line will prevent DCHA heater activation during the first attempt to start the heater. This will also set a Diagnostic Trouble Code (DTC) in the DCHA Control's memory. Do not perform the Dosing Pump Priming Procedure if an attempt was made to start the DCHA without priming the Dosing Pump first. This will put excess fuel in the DCHA Heater Module and cause smoke to emit from the DCHA exhaust pipe when heater activation occurs.

NOTE: Waxed fuel can obstruct the fuel line and reduce flow. Check for the appropriate winter grade fuel and replace as necessary.

3.11.2 COMPONENT DESCRIPTION AND OPERATION

3.11.2.1 DCHA ASSEMBLY

The DCHA is a supplemental heater designed to pre-heat the engine's coolant in order to supply the vehicle's occupants with heat prior to the engine reaching operating temperature. The DCHA assembly mounts underneath the vehicle on the left side floor pan near the front door opening. The DCHA assembly connects to the vehicle's heater hoses and has a fuel supply line that connects to the vehicle's fuel tank.

The DCHA assembly consists of a:

- combustion air fan assembly
- burner housing
- burner insert
- control unit/heat exchanger
- combustion chamber
- dosing pump

3.11.2.2 COMBUSTION AIR FAN

The combustion air fan assembly includes the:

- combustion air fan
- combustion air fan inlet
- fuel supply inlet

The combustion air fan delivers the air required for combustion from the combustion air inlet to the burner insert.

3.11.2.3 BURNER HOUSING

The burner housing includes the:

- coolant inlet
- coolant outlet
- exhaust outlet

The burner housing accommodates the burner insert and is combined with the control unit/heat exchanger as an assembly.

3.11.2.4 BURNER INSERT

The burner insert includes the:

- combustion pipe fuel cross section
- glow plug/flame sensor

Inside the burner insert, fuel is distributed across the combustion-pipe fuel cross section. Combustion of the fuel/air mixture takes place within the combustion pipe to heat the exchanger. The glow plug/flame sensor, located in the burner insert, ignites the fuel/air mixture during heater start up. After heater start up, the glow plug/flame sensor operates in the flame sensor function. The glow plug/flame sensor is an electrical resistor by design, and is located in the burner insert opposite the flame side.

3.11.2.5 CONTROL UNIT/HEAT EXCHANGER

The control unit/heat exchanger includes the:

- control unit
- temperature sensor
- overheat protection
- heat exchanger
- connector terminal

The control unit controls and monitors combustion operation. The control unit is ventilated by means of a ventilation hose routed from the combustion air collector compartment of the burner. The heat exchanger transfers the heat generated by combustion to the coolant circuit. The control unit/heat exchanger and the burner housing are an assembly and must not be disassembled.

The temperature sensor senses the coolant temperature in the heat exchanger as an electrical resistance. This signal is sent to the control unit for processing.

The overheat protection, controlled by the temperature resistor, protects the heater against undue operating temperatures. The overheat protection will switch the heater off if the water temperature exceeds 105°C (221°F).

3.11.2.6 DOSING PUMP

The dosing pump is a combined delivery, dosing, and shut-off system for the fuel supply of the heater. The dosing pump receives its supply of fuel from the vehicle's fuel tank.

3.11.3 OPERATION

3.11.3.1 VENTING THE DCHA'S EXHAUST

WARNING: DO NOT OPERATE THE DCHA IN AN ENCLOSED AREA SUCH AS A GARAGE THAT DOES NOT HAVE EXHAUST VENTILATION FACILITIES. ALWAYS VENT THE DCHA's EXHAUST WHEN OPERATING THE DCHA. FAILURE TO FOLLOW THESE INSTRUCTIONS CAN RESULT IN PERSONAL INJURY OR DEATH.

WARNING: ALLOW THE DCHA ASSEMBLY TO COOL BEFORE PERFORMING A COMPONENT INSPECTION/REPAIR/REPLACEMENT. FAILURE TO FOLLOW THESE INSTRUCTIONS CAN RESULT IN PERSONAL INJURY OR DEATH.

CAUTION: When using a powered exhaust ventilation system, do not attach the exhaust ventilation hose directly to the DCHA exhaust pipe. Too much suction can prevent DCHA operation.

- When using a powered exhaust ventilation system, affix the ventilation hose to the DCHA exhaust pipe or to the vehicle in such a manor that the end of the ventilation hose remains approximately three inches away from the end of the DCHA exhaust pipe.
- When using a non-powered exhaust ventilation system, affix the ventilation hose directly to the DCHA exhaust pipe.

3.11.3.2 ACTIVATION

When the ignition is in Run, the FCM monitors the PCI bus for the Cabin Heater Activation request. The Automatic or Manual Temperature Control initiates this request only when all conditions for Cabin Heater activation are favorable (see below). The request carries the status bit that the FCM requires to activate its Cabin Heater Assist Control Output. This output is a low side driver (coming from FCM pin 15) which supplies a ground signal to the Cabin Heater (pin 5). When the Cabin Heater receives this ground signal input, it interprets this as an activation signal. The FCM low side driver is also capable of diagnostic sensing. The driver will sense an open circuit when the driver is off, and will sense a short to voltage when the driver is on. The FCM will set DTCs for both of these types of faults.

For vehicle's with a Manual Temperature Control system, the DCHA will activate only:

- when the engine is running.
- when the coolant temperature is below 66°C (151°F).
- when the fuel tank has greater than 1/8 of a tank of fuel.
- when the Power switch on the A/C - Heater Control Module is on.
- when the Blend control on the A/C - Heater Control Module is set above 90% reheat (within 2 detents of the full heat position).
- once per ignition cycle, when the ambient temperature is below 9°C (49°F), and the vehicle speed is above 25 km/h (15.5 mph) for two minutes, and the Blend control on the A/C - Heater Control Module is set anywhere from 80% to 90% reheat (3 to 4 detents from the full heat position). Under this circumstance, the DCHA will remain active for five minutes unless additional input is supplied to the DCHA.
- when the Front Control Module (FCM) sees the Cabin Heater Activation request that is bussed from the A/C - Heater Control Module.

For vehicle's with a Automatic Temperature Control system, the DCHA will activate only when the:

- VIN indicates that the vehicle has a diesel engine
- vehicle's odometer reads more than 5 miles.
- engine speed is above 500 rpm.
- coolant temperature is below 66°C (151°F).
- fuel tank has greater than 1/8 of a tank of fuel.
- Power switch on the Automatic Temperature Control is on.
- Driver Temperature Control on the Automatic Temperature Control is set above 22°C (72°F).
- Front Control Module (FCM) sees the Cabin Heater Activation request that is bussed from the Automatic Temperature Control.

When the DCHA starting sequence begins, a DCHA active telltale illuminates in the instrument cluster and the glow plug and the combustion air fan are activated. After 30 seconds, the fuel dosing pump begins operating and the combustion air fan operation is suspended for 3 seconds. Subsequently, the combustion air fan speed is increased in two ramps within 56 seconds to nearly full load operation. After a stabilization phase of 15 seconds, the combustion air fan speed is again increased in a ramp within 50 seconds to nearly full load. After reaching full load fuel delivery, the glow plug is deactivated and the combustion air fan operation is increased to full load. During the subsequent 45 seconds, as well as in normal operation, the glow plug functions as a flame sensor to monitor the flame condition. After all these events, the automatically controlled heating operation starts.

In case of a no flame or a flame out condition, a restart is automatically initiated. If the no flame condition persists, fuel delivery is stopped and the heater enters an error lockout mode with a run-down of the combustion air fan. This will set one or more DTCs in the DCHA Control's memory. If six continuous attempts to start the heater fail due to one or more faults in the DCHA system, the heater enters a heater lockout mode. This will set DTC B1813 along with any other fault(s) that the DCHA Control identified.

indicator lamps will illuminate briefly for a bulb check when the ignition is turned from off to run. All of the gauges receive their information via the PCI bus from the powertrain control module and body control module.

The gauges and the LEDs are not individually replaceable thereby requiring complete replacement of the Instrument Cluster if a repair is necessary. In the event that the Instrument Cluster loses communication with other modules on the PCI bus, the cluster will display “no bus” in the VF display.

The Trip/Reset button is used to switch the display from trip to total mileage. Holding the button when the display is in the trip mode will reset the trip mileage. This button is also used to put the cluster into self-diagnostic mode. The odometer display uses blue-green vacuum fluorescent digital characters.

On base models, the Instrument Cluster has three gauges: Speedometer, fuel and temperature. A red dot appears through openings in the Instrument Cluster face (P-R-N-D-2-1) to indicate the gear selected.

With other models, the Instrument Cluster may also include a tachometer and use a vacuum-fluorescent shift indicator.

The high-line Instrument Cluster features Electroluminescent Illumination of the gauge faces (EL Panel). This feature eliminates the use of bulbs for gauge/panel lighting. In a manner similar to fluorescent lights, a/c voltage from an inverter integrated circuit chip is applied to the phosphorescent material, causing it to glow. The phosphorescent material is screen-printed onto flexible Mylar sheets that form the gauge faces.

The odometer display and door/liftgate ajar indicators turn on when a door is opened to assist both the customer and service technician to view the odometer without turning the ignition on.

On models with AutoStick, the display includes an O/D OFF indicator that is illuminated when the driver presses the Overdrive Off button on the transaxle shifter.

For complete details of the Instrument Cluster, refer to the RS/RG Service Manual.

3.12.1 INSTRUMENT CLUSTER SELF TEST

1. Depress and hold the Odometer Reset button.
2. Turn the ignition switch to on.
3. Release the Odometer reset button.

The Instrument Cluster will illuminate all indicators and step the gauges through several calibration points. Also, the odometer will display any stored codes that may have set.

3.12.2 MESSAGE CENTER (EXPORT ONLY)

The Message Center is above the brow of the Instrument Cluster. It houses the following warning indicators: Water & Fuel, High Beam, Left and Right turn signals, Glow Plug, and Supplimental Heat. On base models equipped with the three-speed transaxle, these indicators appear in the face of the cluster. The Security Alarm set indicator is now a large red circle symbol.

3.13 INTERIOR LIGHTING

3.13.1 COURTESY LAMP CONTROL

The body controller has direct control over all of the vehicle’s courtesy lamps. The body computer will illuminate the courtesy lamps under any of the following conditions:

1. Any door ajar and courtesy lamp switch on the headlamp switch is not in the dome off position.
2. The courtesy lamp switch on the headlamp switch is in the dome on position.
3. A Remote Keyless Entry unlock message is received.
4. Driver door unlocked with key (with VTSS only).

3.13.2 ILLUMINATED ENTRY

Illuminated entry will be initiated when the customer enters the vehicle by unlocking the doors with the key fob, or with the key if the vehicle is equipped with vehicle theft alarm. Upon exiting the vehicle, if the lock button is pressed with a door open, illuminated entry will cancel when the door closes. If the doors are closed and the ignition switch is turned on, the illuminated entry also cancels. The illuminated entry feature will not operate if the courtesy lamp switch is in the dome off position.

3.13.3 INTERIOR LIGHTING BATTERY SAVER

If any of the interior lamps are left on after the ignition is turned off, the BCM will turn them off after 8 minutes. To return to normal operation, the courtesy lamps will operate after the dome lamp switch or door ajar switch changes state. The glove box and switched reading lamps require that the ignition be turned to the on/acc position.

3.14 MEMORY SYSTEM

The memory system consists of power driver’s seat, power mirror, adjustable pedals and radio presets. The Memory Seat/Mirror/Adjustable Ped-

als Module (MSMAPM) is located under the driver's seat. It receives input from the following: driver's manual 8-way seat switch, driver's seat position sensors, PCI bus circuits, and the power mirror sensors. The module uses these inputs to perform the following functions: position the driver's memory seat, both exterior mirrors (during recalls), both pedals, and send/receive the memory system information over the PCI bus.

The Memory Set Switch is wired to the Body Control Module (BCM). A button (either #1 or #2) pressed on the set switch causes the BCM to send a message to the MSMAPM which in turn will send a motion status message back to the BCM. If the message from the MSMAPM indicates no current motion, the BCM will send a recal message to the module. The MSMAPM will set the seat, exterior mirror, pedals, and radio to the presets for the indicated driver.

If any one of the memory controlled systems is inoperative from its manual switch, use the schematics and diagnostic information to correct the concern. This manual addresses the memory problems only and it is assumed there is not a basic component failure.

3.14.1 POWER SEAT

The memory power seat provides the driver with 2 position settings for the driver's seat. Each power seat motor is connected to the MSMAPM with two motor drive circuits. Each circuit is switched between battery and ground. By being able to bi-directionally drive the circuits, the MSMAPM controls the movement of the motors based on input from the power seat switch or from the position sensors when performing a memory recall. Each motor contains a potentiometer to monitor the seat position. To monitor the position of the motor, the MSMAPM sends out a 5-volt reference on the sensor supply circuit. The sensor is grounded back to the module on a common ground circuit. Based on the position of the sensor, the MSMAPM monitors the voltage change through the sensor on a separate signal circuit.

The MSMAPM stores the input value of each of the four seat potentiometers in memory when the system requests a set. The driver can initiate a memory recall, using either the door mounted memory switch or the RKE transmitter (if the remote linked to memory feature is enabled via the EVIC). When initiated, the MSMAPM adjusts the four seat sensors (by using the motors) to match the memorized seat position data.

For safety, the memory seat recall is disabled by the MSMAPM when the vehicle is out of park position or if the speed is not zero. Any obstruction to seat movement over a 2-second delay will cause the seat to stop moving in which case a stalled motor would be detected by the MSMAPM and the corresponding seat output would be deactivated. However, if the object obstructing the seat is removed, the seat will function normally again.

3.14.2 MEMORY MIRROR

The driver sideview mirror contains vertical and horizontal bi-directional drive positioning motors and position sensors. The MSMAPM provides a 5-volt reference on the signal circuit to each position sensor. The sensors share a common ground circuit. The MSMAPM monitors the position of the mirror motors by measuring the voltage on each signal circuit. When a memory position is set, the MSMAPM monitors and stores the position of the outside mirror. The MSMAPM adjusts the mirror to the appropriate positions when a memory recall message is received from the RKE or is requested from the memory set switch.

The power mirror switch during non-memory operation operates the mirror independently of the MSMAPM.

3.15 OVERHEAD CONSOLE

COMPASS/TEMPERATURE MODULE, COMPASS/MINI-TRIP COMPUTER or ELECTRONIC VEHICLE INFORMATION CENTER

The Compass/Temperature Module (CT), Compass/Mini-Trip Computer (CMTC) or Electronic Vehicle Information Center (EVIC) is located in the overhead console. The CT provides the vehicle operator with only outdoor temperature and the compass heading. The CMTC or EVIC supplements the standard vehicle instrumentation. The CMTC and EVIC use a vacuum fluorescent (VF) display to supply the vehicle operator with a compass heading, outdoor temperature, average fuel economy, distance to empty, trip odometer, elapsed ignition on time, distance to service, warning messages, and service messages.

The difference between a CMTC and an EVIC is that only the EVIC provides additional memory, feature programming, and warning messages. The EVIC is capable of displaying warning messages and memory system messages when the vehicle is equipped with memory systems. The EVIC also provides the interface to enable and disable vehicle programmable features when the vehicle is equipped with certain features.

If equipped, the EVIC is also available with an integrated Universal Garage Door Opener (UGDO) known as HomeLink®. The EVIC may also be equipped with up to 4 power door switches: ON/OFF, Left Sliding Door, Right Sliding Door, and Liftgate.

The CT function buttons are labeled C/T and US/M. The CMTC function buttons are labeled US/M, C/T, RESET, and STEP. The EVIC function buttons are labeled C/T, RESET, STEP, and MENU. The three UGDO buttons are labeled with dots to indicate the channel number.

The BCM supplies most of the information displayed by the CMTC/EVIC. Display information, except for the internal compass function, is received over the PCI bus. The FCM supplies the ambient temperature sensor information via the PCI bus. The CMTC/EVIC sends and receives data over the PCI bus, communicating with the BCM, PCM, FCM, and the Instrument Cluster. Tire Pressure Monitoring System information is received from the SKREEM via PCI bus information. The tire pressure sensors are mounted to the vehicle wheels. For complete information, refer to the Tire Pressure Monitoring System section in this publication.

3.15.1 VEHICLE INFORMATION DISPLAY

The CMTC/EVIC provides the following functions:

- Compass direction
- Outside temperature
- Elapsed ignition on time
- Distance to empty
- Average fuel economy
- Trip odometer
- Distance to service

The EVIC will also display the following driver alert messages:

- TURN SIGNAL ON (with vehicle graphic)
- PERFORM SERVICE
- DOOR OPEN (individual or multiple doors, with graphic)
- LOW TIRE PRESSURE (when equipped)
- ADJUSTABLE PEDAL DISABLED CRUISE ENGAGED (when equipped)
- ADJUSTABLE PEDAL DISABLED VEHICLE IN REVERSE (when equipped)

An audible chime or chimes will accompany any displayed warning messages. Chime requests with an OPEN message are dependent upon vehicle speed.

The CT/CMTC/EVIC will not display information for any of the screens for which it did not receive the proper PCI bus data. Refer to the symptom list in the Overhead Console section for problems related to the CT/CMTC/EVIC.

The CMTC/EVIC receives the following messages from the Body Control Module (BCM):

- Verification of US/Metric status
- VF display dimming brightness and exterior lamp status
- Elapsed Ignition On Time data
- Average Fuel Economy
- Distance to Empty
- Distance to service
- Driver warning messages

The CT/CMTC/EVIC receives the following messages from the Front Control Module (FCM):

- Outside Temperature

The CMTC/EVIC receives the following messages from the Powertrain Control Module (PCM):

- Trip Odometer data
- Vehicle Speed

The EVIC receives the following messages from the Adjustable Pedal System Module (APS):

- APS status warnings

The CT/CMTC/EVIC receives the following messages from the Sentry Key Remote Electronic Entry Module (SKREEM):

- Tire Pressure information

The CMTC/EVIC transmits the following messages to the BCM:

- Status Request: Beep, Reset, US/M Toggle
- Current Display

STEP BUTTON

The STEP Button can be used in one of the following three ways:

1. To sequentially select one of seven displays or blank display in the following order:
   - Average Fuel Economy
   - Distance to Empty
   - Trip Odometer
   - Time Elapsed
   - Distance to Service Message
   - Off (Blank)
2. To set the magnetic variance zone when VARIANCE = X (X = 1 - 15) is indicated in the VF Display.
3. To select the displayed programmable feature setting. (When equipped.)

MENU BUTTON (EVIC only)

For complete information of the programmable features and memory messages, refer to the RS/RG Service Manual.

Use the MENU button to sequentially step the EVIC through the programmable features.

RESET BUTTON

The RESET Button has two different functions:

1. To clear the trip functions that may be reset
2. To enter and exit the diagnostic mode

Pressing the RESET button once will clear the trip function that is currently being displayed (except Distance to Service) and the CMTC/EVIC will send a PCI bus beep request to the BCM. If the RESET button is pressed again within 3 seconds, the CMTC/EVIC will reset ALL of the trip functions and an additional beep request is sent to the BCM. The trip functions that may be reset are:

- Average Fuel Economy
- Trip Odometer
- Elapsed Time

A reset will only occur if one of the trip functions that may be reset is currently being displayed. Pressing the RESET button for more than three (3) seconds resets the Distance to Service function while the Distance to Service message is being displayed. The CMTC/EVIC module will send a beep request to the BCM.

Simultaneously pressing the RESET button and the STEP button while turning the ignition from Off to On will enter the CMTC/EVIC into the self-diagnostic mode.

COMPASS/TEMPERATURE (C/T) BUTTON

Actuating the Compass/Temperature Button (C/T) will cause the CMTC/EVIC to display the compass and temperature information. This function will operate from another traveler display or from the programmable feature mode.

3.15.2 TRAVELER DISPLAY FUNCTIONS

Using the STEP button will change the CMTC/EVIC between modes of operation and display the appropriate information according to data received from the PCI Bus.

COMPASS/TEMPERATURE

The CMTC/EVIC simultaneously displays the compass reading and the outside temperature. Outside temperature information is received via the PCI bus from the FCM.

The CMTC/EVIC module internally senses and calculates the compass direction.

COMPASS OPERATION - ALL

Upon ignition on, if the calibration information stored in the CMTC memory is within the normal range, the CMTC will perform in slow Auto-Cal mode. In slow Auto-Cal mode, the CMTC continuously compensates for the slowly changing magnetic field of the vehicle. The compass module detects changes in the vehicle magnetism and makes appropriate internal corrections to ensure proper displayed direction.

However, if the calibration information stored in the CMTC memory is not within the normal range at ignition on, the CMTC will enter fast Auto-Cal. CAL is displayed along with the temperature.

Auto activation of the fast Auto-Cal mode will also occur when the CMTC is subjected to high magnetic field strength levels, which cause all compass readings to be erroneous for a continuous period of five (5) minutes. During fast Auto-Cal, CAL will be displayed along with the temperature.

Fast Auto-Cal can also be performed manually, by pressing and holding the RESET button for 10 seconds during the Compass/Temperature display mode.

3.15.3 SETTING MAGNETIC ZONE VARIANCE

Variance is the difference between magnetic North and geographic North. For proper compass function, the correct variance zone must be set. Refer to the Zone Variance map for the correct zone. Follow these steps to check or change the variance zone:

CMTC/EVIC:

- The ignition switch must be in the On position and the CMTC/EVIC display must not be blank.
- If the compass/temperature data is not currently being displayed, momentarily press and release the C/T button to display compass/temp information.
- Press and hold the RESET button (approximately 5 seconds) until VARIANCE = XX is displayed. The CMTC/EVIC will display the variance zone stored in memory and the word VARIANCE.
- Use the RESET button to select the proper variance zone number, 1 through 15.
- After selecting the proper zone number, momentarily press and release the RESET button. The variance zone is then stored in the memory and the CMTC/EVIC returns to normal operation.

CT:

- The ignition switch must be in the On position and the C/T display must not be blank.
- Press and hold the C/T and US/M buttons (approximately 5 seconds) until VARIANCE = XX is displayed. The C/T will display the variance zone stored in memory and the word VARIANCE.
- Use the US/M button to select the proper variance zone number, 1 through 15.
- After selecting the proper zone number, momentarily press and release the C/T button. The

variance zone is then stored in the memory and the C/T returns to normal operation..

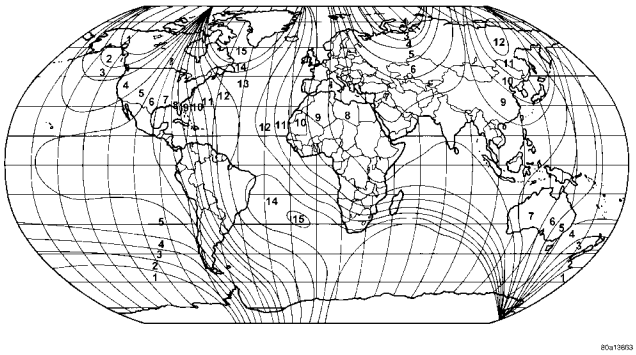

80a13693

3.15.4 COMPASS CALIBRATION

The compass module has 2 types of auto-calibration; slow-cal and fast-cal. Slow-cal ensures that during normal vehicle operation the compass performs auto-calibration functions to keep the compass sensors in their proper operating range. Whenever the ignition is On and the CT/CMTC/EVIC receives PCI bus data indicating that engine RPM is greater than zero, auto-calibration is performed continuously.

If the calibration information stored in the compass module memory is not within the normal range after a power-up cycle, the compass will display CAL. The CT/CMTC/EVIC will enter into the fast-cal mode until calibration is complete.

To enter the compass into Manual Calibration mode, perform the following steps:

- Drive the vehicle to an area away from any large metal objects or overhead power lines.
- Ensure that the proper variance zone is selected. See ″Setting Magnetic Zone Variance.″
- The ignition switch must be in the On position and the CMTC/EVIC display must not be blank.
- Press the C/T button to view the Compass/ Temperature display.
- Press and hold the RESET button (approximately 10 seconds) until CAL is displayed, then release the button.
- Drive slowly, less than 5 MPH (8KPH) in at least 1 complete 360-degree circle.
- CAL will remain illuminated to alert the driver that the compass is in the calibration mode.
- After calibration is complete, CAL will turn off.

NOTE: For C/T Manual Calibration, perform the same procedure as above, but press and hold the C/T and US/M buttons until CAL is displayed.

If the compass appears blank, unable to be calibrated, or the compass displays false indications, the vehicle must be demagnetized. Refer to Compass Demagnetizing Procedure in the Service Manual.

3.15.5 SELF-CHECK DIAGNOSTICS

The CT/CMTC/EVIC is capable of performing a diagnostic self check on its internal functions. Diagnostics may be performed using a DRBIII® or by using the following procedure:

1. For CMTC/EVIC: With the ignition switch in the OFF position, depress and hold the RESET and the STEP buttons.
   For CT: With the ignition switch in the OFF position, depress and hold the C/T and the US/M buttons.
2. Turn the ignition switch to the ON position.
3. Continue to hold both buttons until the software versions are displayed, then release the buttons.
4. All of the VFD segments will illuminate for 2-4 seconds. Check for segments that do not illuminate or illuminate all the time.
5. When the self-check is complete the EVIC will display one of the following messages:

- PASS SELF TEST
- FAILED SELF TEST
- NOT RECEIVING J1850 MESSAGE
  When the self-check is complete the CT/CMTC will display one of the following messages:
- PASS
- FAIL
- BUS

1. To exit the self-check mode:

For the CMTC/EVIC: Depress the STEP or RESET button, or cycle the ignition switch and the CMTC/EVIC will return to normal operation.

For the C/T: Depress the C/T or US/M button, or cycle the ignition switch and the CT will return to normal operation.

If a Communication fault is displayed, refer to the symptom list. If a FAIL or FAILED is displayed, the CT/CMTC/EVIC must be replaced.

3.15.6 AMBIENT TEMPERATURE SENSOR

The ambient air temperature is monitored by the FCM and displayed by the CT/CMTC/EVIC. The FCM receives a hardwire input from the ambient temperature sensor (ATS).

The ATS is a variable resistor that operates on a 5-volt reference signal circuit hardwired from the FCM. The resistance in the ATS changes as the outside temperature rises or falls. The FCM senses the change in reference voltage through the ATS resistor. Based on the resistance of the ATS, the FCM is programmed to correspond to a specific

temperature. The FCM stores and filters the ambient temperature data and transmits this data to the CMTC/EVIC via the PCI Bus. The ATS cannot be adjusted or repaired and, if faulty or damaged, it must be replaced.

3.15.7 AMBIENT TEMPERATURE SENSOR FAULT CODES

The outside temperature function is supported by the ambient temperature sensor (ATS), a signal and ground circuit hardwired to the FCM, and the CMTC/EVIC display.

If the ATS sense circuit is shorted to ground, the temp display will be 54°C (130°F) to indicate a SHORT circuit condition.

If the ATS sense circuit is open, the temp display will be -40°C (-40°F) to indicate an OPEN circuit condition.

If there is an OPEN or SHORT circuit condition, it must be repaired before the CMTC/EVIC VFD can be tested.

The ATS is supported by the FCM. Ambient Temperature Sensor DTCs will be recorded in the FCM. The ATS can be diagnosed using the following Sensor Test. Test the ATS circuits using the diagnostics in the Body Diagnostic Procedures Manual. If the CMTC/EVIC passes the self-test, and the ATS, the circuits, and PCI bus communications are confirmed to be OK, but the CMTC/EVIC temperature display is inoperative or incorrect, replace the FCM.

AMBIENT TEMPERATURE SENSOR TEST

1. Turn the ignition OFF.
2. Disconnect the ATS harness connector.
3. Measure the resistance of the ATS using the following min/max values:

- 0° C (32° F) Sensor Resistance = 29.33 - 35.99 Kilohms
- 10° C (50° F) Sensor Resistance = 17.99 - 21.81 Kilohms
- 20° C (68° F) Sensor Resistance = 11.37 - 13.61 Kilohms
- 25° C (77° F) Sensor Resistance = 9.12 - 10.86 Kilohms
- 30° C (86° F) Sensor Resistance = 7.37 - 8.75 Kilohms
- 40° C (104° F) Sensor Resistance = 4.90 - 5.75 Kilohms

The sensor resistance should read between these min/max values. If the resistance values are not OK, replace the Sensor.

3.15.8 HOMELINK® UNIVERSAL TRANSMITTER

If equipped, the HomeLink® Universal Transmitter is integrated into the overhead console. For added security it will operate home security systems that use coded signals known generically as *Rolling Codes*. The overhead console display provides visual feedback to the driver, indicating which HomeLink® transmitter channel button is being pressed. The HomeLink® can learn and store up to three separate transmitter radio frequency codes to operate garage door openers, security gates, and security lighting. The HomeLink® buttons are marked with one, two, or three dots. For complete information, refer to Universal Transmitter in the Service Manual or the Owner's Manual.

3.15.9 TIRE PRESSURE MONITORING SYSTEM (TPMS)

If equipped with the Tire Pressure Monitoring System (TPMS), each of the vehicles four wheels (spare wheel optional) will have a valve stem with a pressure sensor and radio transmitter built in. Signals from the tire pressure Sensor/Transmitter are received and interpreted by the Sentry Key Remote Entry Module (SKREEM). Using the DRBI-II®, go to ANTI-THEFT for the SKREEM data.

A Sensor/Transmitter in a mounted wheel will broadcast an RF frequency indicating its pressure once per minute when the vehicle is in drive mode. To activate the Sensor/Transmitter operation, the required SKREEM speed is 13 mph (20 km/h). Each Sensor/Transmitters broadcast is uniquely coded so that the SKREEM can monitor the states of each Sensor/Transmitter on the vehicle. The SKREEM TPMS does not use a magnet to relearn, it automatically learns while driving after a SKREEM or a Sensor/Transmitter has been replaced.

3.15.9.1 TRAINING THE SKREEM

If a Sensor/Transmitter is replaced, the vehicle has to be parked for at least 15 minutes for the system to be ready to learn the new Sensor/Transmitter ID code. The vehicle then must be driven for a minimum of five minutes with a minimum continuous speed above 13 mph (20 km/h). The system will learn the new Sensor/Transmitter and clear the DTC's automatically. The Sensor/Transmitters are programmed at the assembly plant in this clockwise orientation:

Sensor/Transmitter 1 = Left Front
Sensor/Transmitter 2 = Right Front
Sensor/Transmitter 3 = Right Rear
Sensor/Transmitter 4 = Left Rear

NOTE:

1. **If one or all Sensor/Transmitters cannot be trained, check for and avoid RF interference.**
2. **If one Sensor/Transmitter still cannot be trained, replace it and retry.**
3. **If all Sensor/Transmitters still fail to train, replace the SKREEM.**

3.15.9.2 PRESSURE THRESHOLDS

The SKREEM will monitor the tire pressure signals from the Sensor/Transmitters and determine if any tire has gone below the low-pressure thresholds. Refer to the table below:

LOW TIRE PRESSURE THRESHOLDS	
SYSTEM STATUS INDICATOR	TIRE PRESSURE
ON	193 kPa (28 PSI)
OFF	227 kPa (33 PSI)

3.15.9.3 ACTIVE FAULT AND SYSTEM ALERTS

An active fault will be triggered when a system failure has been detected. When this occurs, the Instrument Cluster will illuminate the TPMS indicator and the SKREEM will store the fault code. An alert will be triggered when a tire pressure has gone below the set threshold pressure. The SKREEM will request a message to be displayed on the EVIC (if equipped). Only when a tire pressure has gone below the set threshold pressure will the SKREEM illuminate the TPMS indicator and request the EVIC message (if equipped). This action will be displayed as long as the fault/alert condition is active.

3.16 PARK ASSIST SYSTEM

The Park Assist System display activates an audible tone that changes from intermittent to continuous as the final two Light Emitting Diodes (LED's) are illuminated on one side or both sides of the display.

The system detection length from the rear of the vehicle is 0.3 meters to 1.5 meters. This area extends around the rear side of the vehicle. The system detection height from the ground is 0.2 meters to about 1.5 meters. The radio mutes when the system activates its audible tone.

When the driver selects Reverse or Neutral the system scans for objects behind the vehicle using four sensors located in the rear bumper. Objects can be detected from up to 1.5 meters. A warning display above the rear window provides both visible and audible warnings indicating the range of the object.

The system is active only when the vehicle is in reverse or neutral for vehicle speeds less than 16 Km/h (10 mph). If the vehicles Parking/Emergency Brake is applied, the system is deactivated.

The display contains two sets of yellow and red Light Emitting Diode's (LED's) that the driver can see in the rear view mirror. Each side of the vehicle has its own warning LED's. The system provides a visual warning by illuminating one or more yellow LED's as the vehicle gets closer to the object. As the vehicle continues to approaches the object, one red LED is illuminated and the system emits a series of short beeps. The tone will remain constant and both red LED's are illuminated once the vehicle is within 12 inches (30.5 cm) of the object.

The system can be turned ON or OFF through the Electronic Vehicle Information Center (EVIC) when the vehicle is in PARK. If the park assist system is turned OFF, a single chime will sound and the EVIC will display the following message "REAR PARK ASSIST OFF", when the vehicle is in reverse.

- Ensure that the rear bumper is free of dirt and debris to keep the system operating properly.
- Jackhammers, large trucks, and other vibrations could affect the performance of the system.
- Ensure that the parking brake is not applied.

If "Service Park Assist System" appears in the EVIC after making sure the rear bumper is clean, proceed to diagnose the system using a scan tool and the appropriate diagnostic information.

3.17 POWER DOOR LOCK SYSTEM

When the BCM receives input for a lock request from a door lock switch, RKE or cylinder lock switch (only with VTSS), it will turn the lock drivers on for a specified time of 375 msec. If the request is there beyond 375 msec, the BCM considers the door lock signal stuck. Once a door lock or unlock signal is stuck for longer than 10 seconds, the BCM will set a trouble code and the signal input is ignored until the stuck condition disappears. The door lock switches provide a variable amount of resistance thereby dropping the voltage of the multiplexed (MUX) circuit and the BCM will respond to that command.

3.17.1 DOOR LOCK INHIBIT

When the key is in the ignition and in any position and either front door is open, the door lock switches LOCK functions are disabled. The UNLOCK functions are still functional. This protects against locking the vehicle with the keys still in the ignition. The RKE key fob will still lock the doors as

usual. After the key is removed from the ignition or the doors are closed, the power door locks will operate normally.

3.17.2 AUTOMATIC DOOR LOCKS

This feature can be enabled or disabled by using either the DRBIII® or the customer programming method. When enabled all the doors will lock when the vehicle reaches a speed greater than 18 MPH (29 KMH) and all the doors are closed. If a door is opened and the vehicle slows to below 18 MPH (29 KMH), the door locks will operate again once all doors are closed and the speed is above 18 MPH (29 KMH).

3.17.3 REMOTE KEYLESS ENTRY (RKE)

The RKE transmitter uses radio frequency signals to communicate with the SKREEM module. The SKREEM is on the PCI bus. When the operator presses a button on the transmitter, it sends a specific request to the SKREEM. In turn the SKREEM sends the appropriate request over the PCI Bus to the:

- Body Control Module (BCM) to control the door lock and unlock functions, the arming and disarming of the Vehicle Theft Security System (if equipped), and the activation of illuminated entry.
- Integrated Power Module (IPM) to activate the park lamps, the headlamps, and the horn for horn chirp.
- Power Liftgate Module (PLGM) to control the liftgate operation (double press).
- Power Sliding Door Module (PSDM) to control the sliding door operation (double press).

After pressing the lock button on the RKE transmitter, all of the door locks will lock, the illuminated entry will turn off (providing all doors are closed), and the vehicle theft security system (if equipped) will arm. After pressing the unlock button, on the RKE transmitter, one time, the driver door lock will unlock, the illuminated entry will turn on the courtesy lamps, and the vehicle theft security system (if equipped) will disarm. After pressing the unlock button a second time, the remaining door locks will unlock. The EVIC or the DRBIII® can reprogram this feature to unlock all of the door locks with one press of the unlock button. If the vehicle is equipped with the memory system, the memory message will identify which transmitter (1 or 2) sent the signal.

The SKREEM is capable of retaining up to 8 individual access codes (8 transmitters). If the PRNDL is in any position except park, the SKREEM will disable the RKE. The 3 or 6 button transmitter uses 1-CR2032 battery. The minimum battery life is approximately 5 years based on 20 transmissions a day at 84°F (25°C). Use the DRBIII® or the Miller Tool 9001 RF Detector to test the RKE transmitter. Use the DRBIII® or the customer programming method to program the RKE system. However, the SKREEM will only allow RKE programming when the ignition is in the on position, the PRNDL is in park position, and the VTSS (if equipped) is disarmed.

3.17.3.1 PANIC FUNCTION

Pressing the panic button on the RKE transmitter will cause the headlamp relay, the park lamp relay, and the horn relay to pulsate, which in turn will cause the exterior lamps to flash and the horn to sound intermittently. It will also cause the courtesy lamp relay to actuate, turning on the courtesy lamps. Pressing the panic button again stops the headlamps and the park lamps from flashing and the horn from sounding. However, the courtesy lamps will remain on until either the BCM times out lamp operation or until the ignition is turned on. The panic feature operates for three minutes at a time, unless the operator cancels it, or the ignition is turned on.

Actuating the headlamp, horn, park lamps, and courtesy lamps with the DRBIII® will verify if the circuits and the Integrated Power Module are OK. If the panic feature is still inoperable with all transmitters, it will be necessary to replace the SKREEM. If the function is inoperable with just one transmitter, then replace only that transmitter.

3.17.3.2 ROLLING CODE

The rolling code feature changes part of the transmitter message each time that it is used. The transmitter message and the receiver message increment together. Under certain conditions with a rolling code system (pressing a button on the RKE transmitter over 255 times outside the receiver range, battery replacement, etc.), the receiver and transmitter can fall out of synchronization. Note: The lock function works from the RKE transmitter even in an out of synchronization condition and therefore it could be verified by pressing the LOCK button on the RKE integrated key. To resynchronize, press and release the UNLOCK button on the RKE transmitter repeatedly (it may take up to eight cycles) while listening carefully for the power door locks in the vehicle to cycle, indicating that resynchronization has occurred.

3.17.3.3 PROGRAMMABLE DOOR LOCK FEATURES

- The RKE can be changed to unlock all doors with one press

- The Automatic Door Locks can be enabled/disabled
- Auto Unlock on Exit can be enabled/disabled
- RKE horn chirp on lock can be enabled/disabled
- RKE optical chirp (turn signal lamps) can be enabled/disabled
- Program a new RKE transmitter.
- RKE linked to memory (if equipped with memory system) enabled/disabled (DRBIII® only). Allows memory to be operable only from the driver door switch.

3.18 POWER FOLDING MIRRORS

The power folding mirrors are powered to two positions: folded and unfolded. The driver may choose fold or unfold with a switch that is located on the right side of the steering column. The folding mirror switch grounds a sense wire that comes from the Body Control Module when it is placed in the fold position. The mirrors will move to the position designated by the switch whether the ignition switch is the On or Off position and both front doors are closed. When the Power Folding Mirror switch is left in the fold position during a vehicle exit the mirrors will automatically unfold then refold after both front doors are closed. This is to prevent mirror contact with either front door when opened. When opening either front door, the Body Control Module will unfold the mirrors in the following manner depending on which front door is opened. If the driver door is opened, only the driver side mirror will unfold. If the passenger door is opened, both mirrors will unfold. The passenger mirror is prevented from unfolding when the driver's door is opened by the Passenger Folding Mirror Relay, which opens the driver circuit to the passenger side mirror.

3.19 POWER LIFTGATE SYSTEM

3.19.1 POWER LIFTGATE

The power liftgate (PLG) system is activated through the use of the following: remote keyless entry (RKE), overhead console switches, outside liftgate handle switch or the DRBIII®. These inputs are hardwired to the body control module (BCM) and can be monitored with a diagnostic tool. The BCM will send the message via PCI bus to the power liftgate module (PLGM). The liftgate must be in the full open or full closed position to operate. Once the BCM sends a button activation message to the PLGM, the module shall read all inputs, outputs and vehicle conditions to determine whether it shall open, close or inhibit the PLG operation. Once the PLGM determines the vehicle conditions are safe for operation, the PLGM will initiate a chime for 2 seconds prior to the liftgate activation and 2 seconds during the open or close cycle.

During an opening or closing cycle, the PLGM can detect an obstacle present should it meet sufficient resistance by the hall effect sensors (integrated in the gear motor assembly GMA).

During an open cycle, multiple liftgate activations (RKE, overhead console, B pillar) are ignored until the liftgate reaches the full open position. However, during a close cycle, a 2nd liftgate activation (RKE, overhead console, B pillar) will reverse the liftgate to the full open position.

If the engine is cranked during a power open/close the PLG will pause then resume after engine cranking. In addition, if the vehicle is placed in gear during an open cycle, the PLG shall reverse direction and begin closing. If the vehicle is placed in gear during a closing cycle, the PLG shall continue closing until fully closed. If the outside handle is activated during an open cycle, the PLG will become a full manual liftgate. If the outside handle is activated during a close cycle, the PLG shall reverse direction of travel to the full open position.

3.19.2 DIAGNOSTIC FEATURES

The PLG can be flashed on vehicle via PCI bus with a DRBIII® diagnostic tool. The DRBIII® can read all inputs, actuate all outputs, read module information, and read diagnostic trouble codes. As a reminder, some DTC's can be set during normal PLG operation.

3.19.3 SYSTEM INHIBITORS

1. Battery voltage too high or too low (above 16V, below 9.5V)
2. Vehicle in gear
3. Vehicle speed > 0 mph/km/h
4. Outside temperature too high, above 143°F (62°C) or too low, below -12°F (-24°C).
5. O/H console lockout will inhibit the B pillar switches only.
6. Liftgate locked will inhibit all interior switches from opening (overhead console). A locked liftgate can be power closed.
7. Pinch Sensor switch stuck shall inhibit the power close feature.

3.20 POWER SLIDING DOOR SYSTEM

3.20.1 POWER SLIDING DOOR

The Power Sliding Door (PSD) system is activated through the use of the following: Remote Keyless Entry (RKE), overhead console switches, B

pillar switches or the DRBIII®. These inputs are hardwired to the body control module (BCM) and can be monitored with a diagnostic tool. The BCM will send the message via PCI bus to the power sliding door module (PSDM). The sliding door must be in the full open or full closed position to operate. Once the BCM sends a button activation message to the PSDM, the module shall read all inputs, outputs and vehicle conditions to determine whether it shall open, close or inhibit the PSD operation. During an opening or closing cycle, the PSDM can detect an obstacle present should it meet sufficient resistance by the hall effect sensors (integrated in the drive motor).

During an open cycle, multiple door activations (RKE, overhead console, B pillar) are ignored until the door reaches the full open position. However, during a close cycle, a 2nd door activation (RKE, overhead console, B pillar) will reverse the door to the full open position.

If the engine is cranked during a power open/close the PSD will pause then resume after engine cranking. In addition, if the vehicle is placed in gear during an open cycle, the PSD shall reverse direction and begin closing. If the vehicle is placed in gear during a closing cycle, the PSD shall continue closing until fully closed.

If the inside or outside handle is activated during an open or close cycle, the PSD will become a full manual sliding door. The child lockout is mechanical only and has no effect on the B-pillar switch as it did in previous models.

There is only one part number for the power sliding door module (PSDM). The driver sliding door harness has an additional ground circuit which will identify it as the driver side. This eliminates the need for a left and a right side module.

3.20.2 DIAGNOSTIC FEATURES

The PSDM can be flashed on vehicle via PCI bus with a DRBIII® diagnostic tool. The DRBIII® can read all inputs, actuate all outputs, read module information, and read diagnostic trouble codes. As a reminder, some DTC's can be set during normal PSD operation.

3.20.3 SYSTEM INHIBITORS

1. Battery voltage too high or too low (above 16V, below 9.5V)
2. Vehicle in gear
3. Vehicle speed > 0 mph/km/h
4. O/H console lockout will inhibit the B pillar switches
5. Doors locked will inhibit all interior switches from opening (Overhead Console, B Pillar). A locked sliding door can be power closed.

3.21 REAR WINDOW DEFOG/HEATED MIRROR/FRONT WIPER DE-ICE (IF EQUIPPED)

The defroster button located on the HVAC control controls the rear window defogger, heated side view mirrors and front wiper de-icer grid. In addition the front wiper de-ice function is turned on when front defog/defrost mode is selected.

When the defroster button is pushed, the HVAC control sends a bus message over the PCI bus to the Front Control Module (FCM) which controls the Rear Window Defogger relay. The defroster LED will illuminate when the defroster function is on. The defroster will function for 10 minutes or can be cycled off sooner by pressing the defroster button again. The front wiper de-icer grid receives its 12 volts from the accessory relay through fuse 11 and the HVAC control module supplies the grid ground.

3.22 TELECOMMUNICATIONS

3.22.1 HANDS FREE PHONE

OVERVIEW

The vehicle telecommunications system consists of a Hands Free Module, Rear View Mirror, and a Blue-tooth Hands Free Profile enabled cell phone. The system allows vehicle occupants to use voice recognition technology to make, receive and screen phone calls without physically handling a cell phone. The system has a programmable phone book that can prevent the vehicle operator from becoming distracted searching for a specific number. Seven different wireless phones can be programmed to operate each individual system. Each of the seven phones is given a rank of priority when programmed.

OPERATION

Incoming phone messages are transmitted to the vehicle occupants through the vehicles audio system when the ignition is on and the wireless phone is on. Upon receiving the signal from an incoming phone call, the vehicle audio system will fade out the current CD/DVD or radio output. The vehicle occupants are then directed to accept or reject the call. Outgoing audio messages are received through the microphone located in the rearview mirror then transmitted via hardwire to the Hands Free Module and finally transmitted through the wireless phone. Volume of the voice prompts and incoming conversation is controlled using the vehicles' radio audio controls and steering wheel controls if equipped. The rear view mirror contains a Phone Switch, Voice Recognition Switch and a microphone. The rear view mirror transmits these inputs via hardwired circuits to the Hands Free Module.

3.23 VEHICLE THEFT SECURITY SYSTEM

The Vehicle Theft Security System (VTSS) is part of the Body Control Module (BCM). The BCM monitors the vehicle doors, liftgate (export only), hood (export only), and the ignition for unauthorized operation. The alarm activates by sounding the horn, flashing the headlamps and the VTSS indicator lamp. The VTSS does not prevent engine operation, this is done with the Sentry Key Remote Entry Module (SKREEM). The VTSS indicator lamp will flash for approximately 15 seconds during the arming process. If there is no interruption during the arming process, upon completion the VTSS indicator lamp will flash at a slower rate. When the BCM receives an input to trigger the alarm, the BCM will control the outputs of the headlamps, horn, and VTSS lamp for approximately 15 minutes.

Arming (Active and Passive)

Active arming occurs when the ignition key is removed, the RKE transmitter or door key cylinders are used to lock the vehicle doors, whether the doors are open or closed. The arming process is complete only after all doors are closed.

Passive arming occurs when the ignition key is removed, the driver door is opened, and the doors are locked with the power door lock switch, and the door is closed.

Disarming (Active and Passive)

Active disarming occurs when the RKE transmitter is used to unlock the vehicle doors. This disarming will also halt the alarm once it has been activated.

Passive disarming occurs upon normal vehicle entry (unlocking driver door with the key) or turning the ignition switch on with a valid ignition key. This disarming will also halt the alarm once it has been activated.

Tamper Alert

The VTSS tamper alert will sound the horn three times upon disarming after an initial alarming has occurred to indicate a tamper condition has occurred.

Manual Override

The system will not arm if the doors are locked using the manual lock control or if the locks are actuated by an inside occupant after the doors are closed.

Diagnosis

For complaints about the Vehicle Theft Alarm triggering on its own, use the DRBIII® and read the Last VTSS Cause status.

3.23.1 THATCHAM ALARM SYSTEM (EXPORT ONLY)

The Thatcham Alarm Module monitors the vehicle doors, liftgate, hood and the interior of the vehicle for unauthorized operation. The vehicle doors, liftgate, and hood use ajar switches as inputs to the BCM to indicate their current status. The interior of the vehicle is secured by the use of Intrusion Sensors. The Intrusion Sensors are used as inputs to the Thatcham Alarm Module to report any motion in the interior of the vehicle. The alarm activates by sounding the siren, flashing the hazard lamps, and the VTSS Indicator Lamp.

Arming

Before arming, all doors, liftgate, and the hood must be completely closed. The system can only be armed by locking the doors with the RKE transmitter.

Disarming

To disarm the alarm system, use the RKE transmitter or turn the ignition on with a valid ignition key. This will also halt the alarm once it has been activated.

NOTE: A powertrain control module from a vehicle equipped with a vehicle theft security system cannot be used in a vehicle that is not equipped with a vehicle theft security system. If the VTSS indicator lamp comes on after ignition on and stays on, the PCI Bus Communication with the powertrain control module has possibly been lost.

3.24 WIPER SYSTEM

3.24.1 FRONT WIPER

The front wiper/washer system consists of the following features: lo-hi-speed, mist wipers, intermittent wipers and wipe after wash. The front wiper system is only active when the ignition switch is in the RUN/ACC position. The vehicle operator selects the front wiper function using the front wiper switch (a resistive multiplexed stalk switch) which is integral to the Multi-Function Switch. The front wiper switch is hardwired to the Body Control Module (BCM). Upon receiving a wiper switch signal, the BCM sends a PCI Bus message to the Front Control Module (FCM). The FCM controls the ON/OFF relay, the HIGH/LOW relay and the front and rear washer pump motors.

The Wiper system utilizes the BCM to control the on/off and hi/low relays for the low and hi speed wiper functions, intermittent wiper delay as the switch position changes, pulse wipe, wipe after wash mode and wiper motor functions. The BCM

uses the vehicle speed input to double the usual delay time below 10 MPH (16 KPH).

3.24.2 SPEED SENSITIVE INTERMITTENT WIPE MODE

There are 5 individual delay time settings with a minimum delay of 1.7 seconds to a maximum of 18.4 seconds. When the vehicle speed is under 10 MPH (16 KPH), the delay time is doubled, providing a delay range of 3.4 seconds to 36.8 seconds.

3.24.3 PULSE WIPE

When the wiper is in the off position and the driver presses the wash button for more than .062 seconds, but less than .5 seconds, 2 wipe cycles in low speed mode will be provided.

3.24.4 PARK AFTER IGNITION OFF

Because the wiper relays are powered from the battery, the BCM can run the wipers to park after the ignition is turned off.

3.24.5 WIPE AFTER WASH

When the driver presses the wash button for over .5 seconds and releases it, the wiper will continue to run for 2 additional wipe cycles.

3.24.6 REAR WIPER

The rear wiper/washer system consists of the following features: mist wipers, intermittent wipers and wipe after wash. The rear wiper system is only active when the ignition switch is in the RUN/ACC position. The vehicle operator selects the rear wiper function using one of the three buttons on the dash mounted rear wiper switch. The rear wiper switch is hardwired to the Body Control Module (BCM). Upon receiving a wiper switch signal, the BCM provides 12 volts to the rear wiper motor. Rear washer occurs when the BCM receives a rear washer switch ON input. The BCM sends a PCI Bus message to the FCM requesting rear washer on. The FCM activates the rear washer by providing a ground for the rear washer motor.

3.24.7 SPEED SENSITIVE INTERMITTENT WIPE MODE

The delay setting of the rear wiper system is based solely on the vehicle speed. The delay time is defined as the amount of time from the start of a wipe to the beginning of the next wipe. The rear wiper system delay time is based on the following:

7.75 - (MPH x .05) = Seconds delay

Examples:

At zero (0) MPH the delay is 7.75 seconds.

At 100 MPH the delay is 2.75 seconds.

3.24.8 WIPE AFTER WASH

When the driver presses the wash button for over 1.5 seconds and releases it, the wiper will continue to run for 2 additional wipe cycles.

3.25 USING THE DRBIII®

Refer to the DRBIII® user guide for instructions and assistance with reading trouble codes, erasing trouble codes, and other DRBIII® functions.

3.26 DRBIII® ERROR MESSAGES

Under normal operation, the DRBIII® will display one of only two error messages: user-requested WARM Boot or User-Requested COLD Boot. If the DRBIII® should display any other error message, record the entire display and call the STAR Center. This is a sample of such an error message display:

```
ver:2.14
date: 26 Jul93
file: key_iff.cc
date: Jul26 1993
line: 548
err: 0xi
User-Requested COLD Boot

Press MORE to switch between this display
and the application screen.
Press F4 when done noting information.
```

3.27 DRBIII® DOES NOT POWER UP (BLANK SCREEN)

If the LED's do not light or no sound is emitted at start up, check for loose cable connections or a bad cable. Check the vehicle battery voltage (data link connector cavity 16). A minimum of 11 volts is required to adequately power the DRBIII®. Check for proper grounds at DLC cavities 4 and 5.

If all connections are proper between the DRBIII® and the vehicle or other devices, and the vehicle battery is fully charged, an inoperative DRBIII® may be the result or a faulty cable or vehicle wiring.

3.28 DISPLAY IS NOT VISIBLE

Low temperatures will affect the visibility of the display. Adjust the contrast to compensate for this condition.

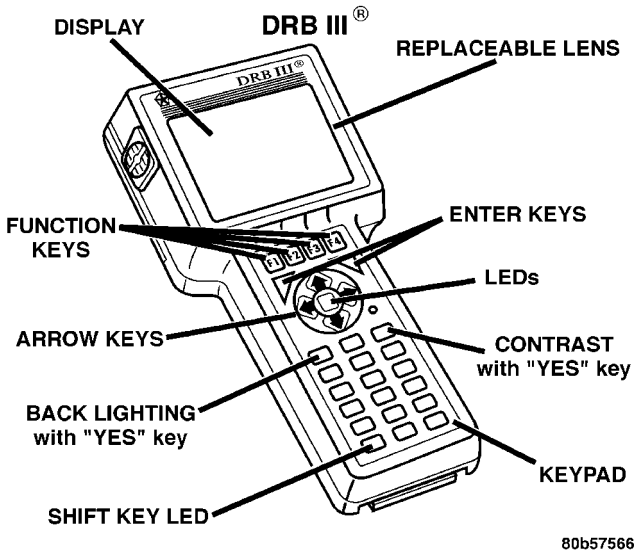

4.0 DISCLAIMERS, SAFETY, WARNINGS

4.1 DISCLAIMERS

All information, illustrations, and specifications contained in this manual are based on the latest information available at the time of publication. The right is reserved to make changes at any time without notice.

4.2 SAFETY

4.2.1 TECHNICIAN SAFETY INFORMATION

WARNING: WHEN OPERATING, ENGINES PRODUCE AN ODORLESS GAS CALLED CARBON MONOXIDE. INHALING CARBON MONOXIDE GAS CAN RESULT IN SLOWER REACTION TIMES AND CAN LEAD TO PERSONAL INJURY OR DEATH. WHEN THE ENGINE IS OPERATING, KEEP SERVICE AREAS WELL VENTILATED OR ATTACH THE VEHICLE EXHAUST SYSTEM TO THE SHOP EXHAUST REMOVAL SYSTEM.

Set the parking brake and block the wheel before testing or repairing the vehicle. It is especially important to block the wheels on front-wheel drive vehicles; the parking brake does not hold drive wheels.

When servicing a vehicle, always wear eye protection, and remove any metal jewelry such as rings, watchbands or bracelets that might make an inadvertent electrical contact.

When diagnosing a body system problem, it is important to follow approved procedures where applicable. These procedures can be found in this General Information Section or in the service manual procedures. Following these procedures is very important to safety of individuals performing diagnostic tests.

4.2.2 VEHICLE PREPARATION FOR TESTING

Make sure the vehicle being tested has a fully charged battery. If it does not, false diagnostic codes or error messages may occur.

4.2.3 SERVICING SUB-ASSEMBLIES

Some components of the body system are intended to be serviced as an assembly only. Attempting to remove or repair certain system subcomponents may result in personal injury and/or improper system operation. Only those components with approved repair and installation procedures in the service manual should be serviced.

4.2.4 DRBIII® SAFETY INFORMATION

WARNING: EXCEEDING THE LIMITS OF THE DRBIII® MULTIMETER IS DANGEROUS. READ ALL DRBIII® INSTRUCTIONS BEFORE USING THE MULTIMETER. FAILURE TO FOLLOW THESE INSTRUCTIONS CAN RESULT IN PERSONAL INJURY OR DEATH.

- Follow the vehicle manufacturer's service specifications at all times.
- Do not use the DRBIII® if it has been damaged.
- Do not use the test leads if the insulation is damaged or if metal is exposed.
- To avoid electrical shock, do not touch the test leads, tips, or the circuit being tested.
- Choose the proper range and functions for the measurement. Do not try voltage or current measurement that may exceed the rated capacity.
- Do not exceed the limits shown in the table below:

FUNCTION	INPUT LIMIT
Volts	0 - 500 peak volts AC 0 - 500 volts DC
Ohms (resistance)*	0 -1.12 megohms
Frequency Measured Frequency Generated	0 - 10 kHz
Temperature	-58 - 1100°F -50 - 600°C

* Ohms cannot be measured if voltage is present. Ohms can be measured only in a non-powered circuit.

- Voltage between any terminal and ground must not exceed 500v DC or 500v peak AC.
- Use caution when measuring voltage above 25v DC or 25v AC.
- Use the low current shunt to measure circuits up to 10A. Use the high current clamp to measure circuits exceeding 10A.
- When testing for the presence of voltage or current, make sure the meter is functioning correctly. Take a reading of a known voltage or current before accepting a zero reading.
- When measuring current, connect the meter in series with the load.
- Disconnect the live test lead before disconnecting the common test lead.
- When using the meter function, keep the DRBIII® away from spark plug or coil wires to avoid measuring error from outside interference.

4.3 WARNINGS

4.3.1 VEHICLE DAMAGE WARNINGS

Before disconnecting any control module, make sure the ignition is “off”. Failure to do so could damage the module.

When testing voltage or continuity at any control module, use the terminal side (not the wire end) of the connector. Do not probe a wire through the insulation; this will damage it and eventually cause it to fail because of corrosion. Be careful when performing electrical tests so as to prevent accidental shorting of terminals. Such mistakes can damage fuses or components. Also, a second code could be set, making diagnosis of the original problem more difficult.

4.3.2 ROAD TESTING A COMPLAINT VEHICLE

Some complaints will require a test drive as part of the repair verification procedure. The purpose of the test drive is to try to duplicate the diagnostic code or symptom condition.

WARNING: REASSEMBLE ALL COMPONENTS BEFORE ROAD TESTING A VEHICLE. DO NOT TRY TO READ THE DRBIII® SCREEN OR OTHER TEST EQUIPMENT DURING A TEST DRIVE. DO NOT HANG THE DRBIII® OR OTHER TEST EQUIPMENT FROM THE REARVIEW MIRROR DURING A TEST DRIVE. HAVE AN ASSISTANT AVAILABLE TO OPERATE THE DRBIII® OR OTHER TEST EQUIPMENT. FAILURE TO FOLLOW THESE INSTRUCTIONS CAN RESULT IN PERSONAL INJURY OR DEATH.

5.0 REQUIRED TOOLS AND EQUIPMENT

DRBIII® (diagnostic read-out box)
Jumper wires
Ohmmeter
Voltmeter
Sentry Key Tester
Test Light
8443 SRS Airbag System Load Tool
9077 Occupant Classification Seat Weights

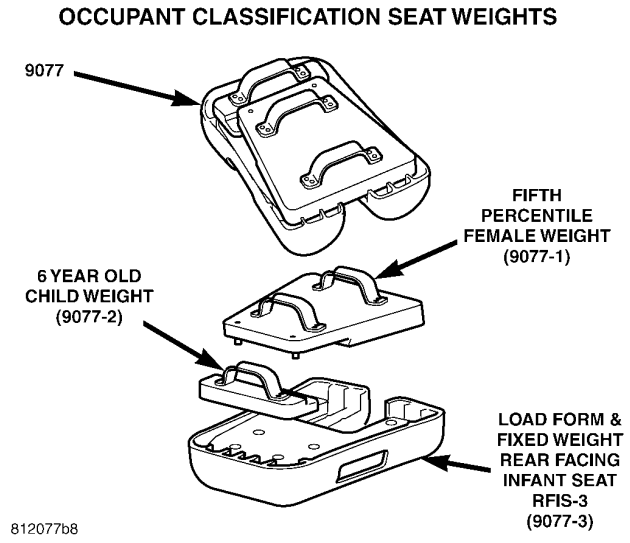

6.0 GLOSSARY OF TERMS

ABS	antilock brake system
ACT	actuator
APS	adjustable pedals system
ATC	automatic temperature control
BCM	body control module
BPS	bladder pressure sensor
BTS	belt tension sensor
CAB	controller antilock brake
CMTC	compass/mini-trip computer
CPA	connector positive assurance
DAB	driver airbag
DCHA	diesel cabin heater assist (cabin heater)
DLC	data link connector
DTC	diagnostic trouble code

DR	driver
EBL	electric back lite (rear window defogger)
ECM	engine control module
EVIC	electronic vehicle information center
FCM	front control module
GCC	Gulf Coast Countries
HE	hall effect
HFM	hands free module
HVAC	heater ventilation, air conditioning
IPM	integrated power module
LDU	lower drive unit
LHD	left hand drive
MIC	mechanical instrument cluster
MTC	manual temperature control
MSMAPM	memory seat/mirror/adjustable pedals module
NAV	navigation
NGC	next generation controller
OBD	on board diagnostics
OCM	occupant classification module
OCS	occupant classification system
OCSVR	occupant classification system verification required
ODO	odometer
ORC	occupant restraint controller
PAB	passenger airbag
PASS	passenger
PCI	Programmable Communication Interface (vehicle communication bus)
PCM	powertrain control module
PDC	power distribution center
PLG	power liftgate
PLGM	power liftgate module
PSD	power sliding door
PSDM	power sliding door module
PWM	pulse width modulated
RHD	Right Hand Drive
RKE	remote keyless entry
RX	receive
SAB	seat airbag
SBS	seat belt switch
SBT	seat belt tensioner
SKREEM	sentry key remote entry module
SQUIB	also called initiator (located inside airbag)
SRS	supplemental restraint system
TCM	transmission control module
TPMS	tire pressure monitor system
TX	transmit
VFD	vacuum fluorescent display
VTSS	vehicle theft security system

7.0

DIAGNOSTIC INFORMATION AND PROCEDURES

Symptom:

PEDAL SENSOR OPEN/SHORTED TO GROUND

When Monitored and Set Condition:

PEDAL SENSOR OPEN/SHORTED TO GROUND

When Monitored: Continuously.

Set Condition: When the Memory Seat Mirror Adjustable Pedals Module(MSMAPM) detects a ground condition on the Adjustable Pedal Sensor Signal circuit. When this fault is set, the pedals will be allowed to move 1.5 seconds and then shut off.

POSSIBLE CAUSES
INTERMITTENT DTC
ADJUSTABLE PEDALS SENSOR FEED CIRCUIT OPEN
ADJUSTABLE PEDALS SENSOR SIGNAL CIRCUIT OPEN
ADJUSTABLE PEDALS SENSOR SIGNAL CIRCUIT SHORTED TO GROUND
ADJUSTABLE PEDALS SENSOR SIGNAL/RETURN CIRCUITS HAVE EXCESSIVE RESISTANCE
ADJUSTABLE PEDALS SENSOR FAULT
MSMAPM - INTERNAL FAULT

TEST	ACTION	APPLICABILITY
1	With the DRBIII®, erase DTC's. With the DRBIII®, read DTC's. Does the DRBIII® display PEDAL SENSOR OPEN/SHORTED TO GROUND DTC active? Yes → Go To 2 No → Go To 9	All
2	Turn the ignition off. Ensure the Adjustable Pedals Sensor is fully seated and locked. Turn the ignition on. With the DRBIII®, read the active DTC's. Does the DRBIII® display PEDAL SENSOR OPEN/SHORTED TO GROUND DTC active? Yes → Go To 3 No → Go To 9	All
3	Turn the ignition off. Disconnect the Adjustable Pedals Sensor harness connector. Turn the ignition on. Measure the voltage between the Adjustable Pedals Sensor Feed circuit and the Adjustable Pedals Sensor Return circuit. Is the voltage between 4 and 5.2 volts? Yes → Go To 4 No → Go To 8	All

PEDAL SENSOR OPEN/SHORTED TO GROUND — Continued

TEST	ACTION	APPLICABILITY
4	Turn the ignition off. Disconnect the Adjustable Pedals Sensor harness connector. Disconnect the MSMAPM harness connector. Measure the resistance of the Adjustable Pedals Sensor Signal circuit between the Adjustable Pedals Sensor connector and the MSMAPM connector. Is the resistance below 1.0 ohm? Yes → Go To 5 No → Repair the Adjustable Pedals Sensor Signal circuit for an open. Perform ADJUSTABLE PEDALS VERIFICATION TEST - VER 1.	All
5	Turn the ignition off. Disconnect the Adjustable Pedals Sensor harness connector. Disconnect the MSMAPM harness connector. Measure the resistance of the Adjustable Pedals Sensor Signal circuit to ground. Is the resistance below 1.0 ohm? Yes → Repair the Adjustable Pedals Sensor Signal circuit for a short to ground. Perform ADJUSTABLE PEDALS VERIFICATION TEST - VER 1. No → Go To 6	All
6	Turn the ignition off. Disconnect the Adjustable Pedals Sensor harness connector. Disconnect the MSMAPM harness connector. Connect a jumper wire between the Adjustable Pedals Sensor Signal circuit and the Adjustable Pedals Sensor Return circuit. Measure the resistance between the Adjustable Pedals Sensor Signal circuit and the Adjustable Pedals Sensor Return circuit at the MSMAPM harness connector. Is the resistance below 1.0 ohm? Yes → Go To 7 No → Check and repair for excessive resistance in the Adjustable Pedals Sensor Signal/Return circuits. Perform ADJUSTABLE PEDALS VERIFICATION TEST - VER 1.	All
7	Turn the ignition off. Disconnect the Adjustable Pedals Sensor harness connector. Measure the resistance between the Adjustable Pedals Sensor Signal circuit and the Adjustable Pedals Sensor Return circuit at the Adjustable Pedals Sensor harness connector. Is the resistance below 100.0 ohms? Yes → Replace and program the Memory Seat Mirror Adjustable Pedals Module in accordance with the Service Information.. Perform ADJUSTABLE PEDALS VERIFICATION TEST - VER 1. No → Replace the Adjustable Pedals Sensor in accordance with the Service Information. Perform ADJUSTABLE PEDALS VERIFICATION TEST - VER 1.	All

PEDAL SENSOR OPEN/SHORTED TO GROUND — Continued

TEST	ACTION	APPLICABILITY
8	Turn the ignition off. Disconnect the Adjustable Pedals Sensor harness connector. Disconnect the MSMAPM harness connector. Measure the resistance of the Adjustable Pedals Sensor Feed circuit between the Adjustable Pedals Sensor connector and the MSMAPM connector. Is the resistance below 1.0 ohm? Yes → Replace and program the Memory Seat Mirror Adjustable Pedals Module in accordance with the Service Information.. Perform ADJUSTABLE PEDALS VERIFICATION TEST - VER 1. No → Repair the Adjustable Pedals Sensor Feed circuit for an open. Perform ADJUSTABLE PEDALS VERIFICATION TEST - VER 1.	All
9	Turn the ignition off. Visually inspect the related wiring harness. Look for any chafed, pierced, pinched, or partially broken wires. Visually inspect the related wire harness connectors. Look for broken, bent, pushed out, or corroded terminals. Refer to any Hotline letters or Technical Service Bulletins that may apply. Were any problems found? Yes → Repair as necessary. Perform ADJUSTABLE PEDALS VERIFICATION TEST - VER 1. No → Test Complete.	All

Symptom:

PEDAL SENSOR SHORTED TO BATTERY

When Monitored and Set Condition:

PEDAL SENSOR SHORTED TO BATTERY

When Monitored: Continuously.

Set Condition: When the Memory Seat Mirror Adjustable Pedals Module(MSMAPM) detects the voltage on the Adjustable Pedal Sensor Signal circuit is too high. When this fault is set, the pedals will be allowed to move for 1.5 seconds and then shut off.

POSSIBLE CAUSES
INTERMITTENT DTC
ADJUSTABLE PEDALS SENSOR FAULT
ADJUSTABLE PEDALS SENSOR SIGNAL CIRCUIT SHORTED TO BATTERY
ADJUSTABLE PEDALS SENSOR FEED CIRCUIT SHORTED TO BATTERY
ADJUSTABLE PEDALS SENSOR RETURN CIRCUIT OPEN
MSMAPM - INTERNAL FAULT

TEST	ACTION	APPLICABILITY
1	With the DRBIII®, erase DTC's. With the DRBIII®, read DTC's. Does the DRBIII® display PEDAL SENSOR SHORTED TO BATTERY DTC active? Yes → Go To 2 No → Go To 7	All
2	Turn the ignition off. Ensure the Adjustable Pedals Sensor is fully seated and locked. Turn the ignition on. With the DRBIII®, read the active DTC's. Does the DRBIII® display PEDAL SENSOR SHORTED TO BATTERY DTC active? Yes → Go To 3 No → Go To 7	All
3	Disconnect the Adjustable Pedals Sensor harness connector. Turn the ignition on. With the DRBIII®, read the active DTC's. Does the DRBIII® display PEDAL SENSOR SHORTED TO BATTERY active? Yes → Go To 4 No → Replace the Adjustable Pedals Sensor in accordance with the Service Information. Perform ADJUSTABLE PEDALS VERIFICATION TEST - VER 1.	All

PEDAL SENSOR SHORTED TO BATTERY — Continued

TEST	ACTION	APPLICABILITY
4	Turn the ignition off. Disconnect the Adjustable Pedals Sensor harness connector. Disconnect the MSMAPM harness connector. **Note: Check connector - Clean/repair as necessary.** Turn the ignition on. Measure the voltage of the Adjustable Pedals Sensor Signal circuit. Is there any voltage present? Yes → Repair the Adjustable Pedals Sensor Signal circuit for a short to voltage. Perform ADJUSTABLE PEDALS VERIFICATION TEST - VER 1. No → Go To 5	All
5	Turn the ignition off. Disconnect the Adjustable Pedals Sensor harness connector. Disconnect the MSMAPM harness connector. **Note: Check connector - Clean/repair as necessary.** Turn the ignition on. Measure the voltage of the Adjustable Pedals Sensor Feed circuit. Is there any voltage present? Yes → Repair the Adjustable Pedals Sensor Feed circuit for a short to voltage. Perform ADJUSTABLE PEDALS VERIFICATION TEST - VER 1. No → Go To 6	All
6	Turn the ignition off. Disconnect the Adjustable Pedals Sensor harness connector. Disconnect the MSMAPM harness connector. **Note: Check connector - Clean/repair as necessary.** Measure the resistance of the Adjustable Pedals Sensor Return circuit between the Adjustable Pedals Sensor connector and the MSMAPM connector. Is the resistance below 1 ohm? Yes → Replace and program the Memory Seat Mirror Adjustable Pedals Module in accordance with the Service Information.. Perform ADJUSTABLE PEDALS VERIFICATION TEST - VER 1. No → Repair the Adjustable Pedals Sensor Return circuit for an open. Perform ADJUSTABLE PEDALS VERIFICATION TEST - VER 1.	All

PEDAL SENSOR SHORTED TO BATTERY — Continued

TEST	ACTION	APPLICABILITY
7	Turn the ignition off. Visually inspect the related wiring harness. Look for any chafed, pierced, pinched, or partially broken wires. Visually inspect the related wire harness connectors. Look for broken, bent, pushed out, or corroded terminals. Move the pedals all the way forward and rearward to see if the DTC is related to position. Refer to any Hotline letters or Technical Service Bulletins that may apply. Were any problems found? Yes → Repair as necessary. Perform ADJUSTABLE PEDALS VERIFICATION TEST - VER 1. No → Test Complete.	All

Symptom:

PEDAL SW STUCK FORWARD

When Monitored and Set Condition:

PEDAL SW STUCK FORWARD

When Monitored: Continuously.

Set Condition: When the Memory Seat Mirror Adjustable Pedals Module(MSMAPM) detects battery voltage on the Adjustable Pedals Switch Forward circuit for more than 20 seconds. When this fault is set, the pedals will not move with switch, but will work for memory.

POSSIBLE CAUSES
INTERMITTENT DTC
ADJUSTABLE PEDALS SWITCH FAULT
ADJUSTABLE PEDALS SWITCH FORWARD CIRCUIT SHORTED TO BATTERY
MSMAPM - INTERNAL FAULT

TEST	ACTION	APPLICABILITY
1	With the DRBIII®, erase DTC's. Turn the ignition on. Wait 30 seconds. With the DRBIII®, read DTC's. Does the DRBIII® display PEDAL SW STUCK FORWARD DTC active? Yes → Go To 2 No → Go To 4	All
2	Turn the ignition off. Disconnect the Adjustable Pedals Switch connector. Turn the ignition on. Wait 10 seconds. With the DRBIII®, read DTC's. Does the DRBIII® display PEDAL SW STUCK FORWARD DTC active? Yes → Go To 3 No → Replace the Adjustable Pedals Switch in accordance with the Service Information. Perform ADJUSTABLE PEDALS VERIFICATION TEST - VER 1.	All

PEDAL SW STUCK FORWARD — Continued

TEST	ACTION	APPLICABILITY
3	Turn the ignition off. Disconnect the MSMAPM harness connector. Disconnect the Adjustable Pedals Switch connector. Turn the ignition ON. Measure the voltage of the Adjustable Pedals Switch Forward circuit. Is there any voltage present? Yes → Repair the Adjustable Pedals Switch Forward circuit for a short to voltage. Perform ADJUSTABLE PEDALS VERIFICATION TEST - VER 1. No → Replace and program the Memory Seat Mirror Adjustable Pedals Module in accordance with the Service Information. Perform ADJUSTABLE PEDALS VERIFICATION TEST - VER 1.	All
4	Turn the ignition off. Check for sticking switch. Visually inspect the related wiring harness. Look for any chafed, pierced, pinched, or partially broken wires. Visually inspect the related wire harness connectors. Look for broken, bent, pushed out, or corroded terminals. Refer to any Hotline letters or Technical Service Bulletins that may apply. Were any problems found? Yes → Repair as necessary. Perform ADJUSTABLE PEDALS VERIFICATION TEST - VER 1. No → Test Complete.	All

Symptom:

PEDAL SW STUCK REARWARD

When Monitored and Set Condition:

PEDAL SW STUCK REARWARD

When Monitored: Continuously.

Set Condition: When the Memory Seat Mirror Adjustable Pedals Module(MSMAPM) detects battery voltage on the Adjustable Pedals Switch Rearward circuit for more than 20 seconds. When this fault is set, the pedals will not move with switch, but will work for memory.

POSSIBLE CAUSES
INTERMITTENT DTC
ADJUSTABLE PEDALS SWITCH FAULT
ADJUSTABLE PEDALS SWITCH REARWARD CIRCUIT SHORTED TO BATTERY
MSMAPM - INTERNAL FAULT

TEST	ACTION	APPLICABILITY
1	With the DRBIII®, erase DTC's. Turn the ignition on. Wait 30 seconds. With the DRBIII®, read DTC's. Does the DRBIII® display PEDAL SW STUCK REARWARD DTC active? Yes → Go To 2 No → Go To 4	All
2	Turn the ignition off. Disconnect the Adjustable Pedals Switch connector. Turn the ignition on. Wait 10 seconds. With the DRBIII®, read DTC's. Does the DRBIII® display PEDAL SW STUCK REARWARD DTC active? Yes → Go To 3 No → Replace the Adjustable Pedals Switch in accordance with the Service Information. Perform ADJUSTABLE PEDALS VERIFICATION TEST - VER 1.	All

PEDAL SW STUCK REARWARD — Continued

TEST	ACTION	APPLICABILITY
3	Turn the ignition off. Disconnect the MSMAPM harness connector. Disconnect the Adjustable Pedals Switch connector. Turn the ignition ON. Measure the voltage of the Adjustable Pedals Switch Rearward circuit. Is there any voltage present? Yes → Repair the Adjustable Pedals Switch Rearward circuit for a short to voltage. Perform ADJUSTABLE PEDALS VERIFICATION TEST - VER 1. No → Replace and program the Memory Seat Mirror Adjustable Pedals Module in accordance with the Service Information. Perform ADJUSTABLE PEDALS VERIFICATION TEST - VER 1.	All
4	Turn the ignition off. Check for a sticking switch. Visually inspect the related wiring harness. Look for any chafed, pierced, pinched, or partially broken wires. Visually inspect the related wire harness connectors. Look for broken, bent, pushed out, or corroded terminals. Refer to any Hotline letters or Technical Service Bulletins that may apply. Were any problems found? Yes → Repair as necessary. Perform ADJUSTABLE PEDALS VERIFICATION TEST - VER 1. No → Test Complete.	All

Symptom:

***CAN'T ADJUST PEDALS**

POSSIBLE CAUSES
VEHICLE IN REVERSE OR CRUISE CONTROL ACTIVATED
BODY STYLE FAULT
ACTIVE DTC'S
ADJUSTABLE PEDALS SENSOR CONNECTOR NOT FULLY SEATED
ADJUSTABLE PEDALS MOTOR FAULT
ADJUSTABLE PEDALS MOTOR CIRCUITS OPEN
BUS COMMUNICATION FAULT
MEMORY SEAT MIRROR ADJUSTABLE PEDALS MODULE FUSED B(+) CIRCUIT OPEN
MEMORY SEAT MIRROR ADJUSTABLE PEDALS MODULE GROUND CIRCUIT OPEN
IOD FUSE OPEN
ADJUSTABLE PEDALS SWITCH FUSED B(+) CIRCUIT OPEN
ADJUSTABLE PEDALS SWITCH GROUND CIRCUIT OPEN
ADJUSTABLE PEDALS SWITCH FAULT
ADJUSTABLE PEDALS SWITCH REARWARD CIRCUIT OPEN
ADJUSTABLE PEDALS SWITCH FORWARD CIRCUIT OPEN
MSMAPM - INTERNAL FAULT

TEST	ACTION	APPLICABILITY
1	**NOTE: Adjustable Pedals are disabled when the vehicle is in Reverse or when the Speed Control is activated.** Check whether vehicle is(was) in Reverse and whether Speed Control is(was) activated. Is(was) the vehicle in Reverse or is(was) Speed Control activated? Yes → Correct as necessary. Perform ADJUSTABLE PEDALS VERIFICATION TEST - VER 1. No → Go To 2	All
2	Turn the ignition on. With the DRBIII®, try to read MSMAPM information. Can the MSMAPM be detected by the DRBIII®? Yes → Go To 3 No → Go To 18	All

*CAN'T ADJUST PEDALS — Continued

TEST	ACTION	APPLICABILITY
3	Turn the ignition on. With the DRBIII®, go to MSMAPM menu. Does the DRBIII® display RS BODY STYLE? Yes → Go To 4 No → Ensure the the vehicle VIN is programmed and correct. If valid, replace the Memory Seat Mirror Adjustable Pedals Module in accordance with the Service Information. Perform ADJUSTABLE PEDALS VERIFICATION TEST - VER 1.	All
4	Turn the ignition on. With the DRBIII®, erase DTC's. With the DRBIII®, read DTC's. Does the DRBIII® display any DTC's active? Yes → Refer to symptom list for problems related to the active DTC's. Perform ADJUSTABLE PEDALS VERIFICATION TEST - VER 1. No → Go To 5	All
5	Turn the ignition on. With the DRBIII® in Inputs/Outputs, read the pedal forward and pedal rearward switches. Actuate the Adjustable Pedals Switch in the forward and rearward positions. Does the DRBIII® display PEDAL FWD/RWD SW CLOSED when switch is activated? Yes → Go To 6 No → Go To 10	All
6	Turn the ignition on. With the DRBIII®, actuate the pedal motor forward and rearward. Do the Adjustable Pedals move? Yes → Replace and program the Memory Seat Mirror Adjustable Pedals Module in accordance with the Service Information. Perform ADJUSTABLE PEDALS VERIFICATION TEST - VER 1. No → Go To 7	All
7	Turn the ignition off. Ensure the Adjustable Pedals Sensor is fully seated and locked. Inspect the MSMAPM connector and the Adjustable Pedals Motor connector. Are the connectors FULLY seated and properly plugged in? Yes → Go To 8 No → Repair as necessary. Perform ADJUSTABLE PEDALS VERIFICATION TEST - VER 1.	All

*CAN'T ADJUST PEDALS — Continued

TEST	ACTION	APPLICABILITY
8	Turn the ignition off. Disconnect the Adjustable Pedals Motor harness connector. Using a 12-volt test light, connect it between the Adjustable Pedals Motor Forward and Adjustable Pedals Motor Rearward circuits at the Adjustable Pedals Motor harness connector. With the DRBIII®, actuate the pedal motor forward and rearward. Does the test light illuminate brightly for both directions? Yes → Replace the Adjustable Pedals Assembly in accordance with the Service Information. Perform ADJUSTABLE PEDALS VERIFICATION TEST - VER 1. No → Go To 9	All
9	Turn the ignition on. Using a 12-volt test light, back-probe between the Adjustable Pedals Motor Forward and Adjustable Pedals Motor Rearward circuits at the MSMAPM harness connector. With the DRBIII®, actuate the pedal forward and pedal rearward. Does the test light illuminate brightly for both directions? Yes → Repair the Adjustable Pedals Motor Forward/Rearward circuit(s) for an open. Perform ADJUSTABLE PEDALS VERIFICATION TEST - VER 1. No → Replace and program the Memory Seat Mirror Adjustable Pedals Module in accordance with the Service Information. Perform ADJUSTABLE PEDALS VERIFICATION TEST - VER 1.	All
10	Turn the ignition off. Inspect for an open IOD fuse in the IPM. Is the IOD fuse open? Yes → Replace the fuse. If the fuse is open make sure to check for a short to ground. Perform ADJUSTABLE PEDALS VERIFICATION TEST - VER 1. No → Go To 11	All
11	Turn the ignition off. Disconnect the Adjustable Pedals Switch harness connector. Measure the voltage between the Adjustable Pedals Switch Fused B+ and Ground circuits (cavities 1 & 2). Is there battery voltage present? Yes → Go To 12 No → Go To 16	All

*CAN'T ADJUST PEDALS — Continued

TEST	ACTION	APPLICABILITY
12	Turn the ignition off. Disconnect the Adjustable Pedals Switch harness connector. Turn the ignition on. With the DRBIII® in Inputs/Outputs, monitor the PEDAL FORWARD SW state. Connect a jumper wire between the Adjustable Pedals Switch Fused B+ circuit and the Adjustable Pedals Switch Forward circuit. Does the DRBIII® display PEDAL FORWARD SW CLOSED? Yes → Go To 13 No → Go To 15	All
13	Turn the ignition off. Disconnect the Adjustable Pedals Switch harness connector. Turn the ignition on. With the DRBIII® in Inputs/Outputs, monitor the PEDAL REARWARD SW state. Connect a jumper wire between the Adjustable Pedals Switch Fused B+ circuit and the Adjustable Pedals Switch Rearward circuit. Does the DRBIII® display PEDAL REARWARD SW CLOSED? Yes → Replace the Adjustable Pedals Switch in accordance with the Service Information. Perform ADJUSTABLE PEDALS VERIFICATION TEST - VER 1. No → Go To 14	All
14	Turn the ignition off. Disconnect the Adjustable Pedals Switch harness connector. Disconnect the MSMAPM harness connector. Measure the resistance of the Adjustable Pedals Switch Rearward circuit between the Adjustable Pedals Switch connector and the MSMAPM connector. Is the resistance below 1.0 ohm? Yes → Replace and program the Memory Seat Mirror Adjustable Pedals Module in accordance with the Service Information. Perform ADJUSTABLE PEDALS VERIFICATION TEST - VER 1. No → Repair the Adjustable Pedals Switch Rearward circuit for an open. Perform ADJUSTABLE PEDALS VERIFICATION TEST - VER 1.	All
15	Turn the ignition off. Disconnect the Adjustable Pedals Switch harness connector. Disconnect the MSMAPM harness connector. Measure the resistance of the Adjustable Pedals Switch Forward circuit between the Adjustable Pedals Switch connector and the MSMAPM connector. Is the resistance below 1.0 ohm? Yes → Replace and program the Memory Seat Mirror Adjustable Pedals Module in accordance with the Service Information. Perform ADJUSTABLE PEDALS VERIFICATION TEST - VER 1. No → Repair the Adjustable Pedals Switch Forward circuit for an open. Perform ADJUSTABLE PEDALS VERIFICATION TEST - VER 1.	All

*CAN'T ADJUST PEDALS — Continued

TEST	ACTION	APPLICABILITY
16	Turn the ignition off. Disconnect the Adjustable Pedals Switch harness connector. Measure the voltage between Adjustable Pedals Switch Fused B+ circuit and vehicle body ground. Is there battery voltage present? Yes → Go To 17 No → Repair the Adjustable Pedals Switch Fused B(+) circuit for an open. Perform ADJUSTABLE PEDALS VERIFICATION TEST - VER 1.	All
17	Turn the ignition off. Disconnect the Adjustable Pedals Switch harness connector. Measure the resistance between the Adjustable Pedals Switch Ground circuit and vehicle body ground. Is the resistance below 1.0 ohm? Yes → Replace the Adjustable Pedals Switch in accordance with the Service Information. Perform ADJUSTABLE PEDALS VERIFICATION TEST - VER 1. No → Repair the Adjustable Pedals Switch Ground circuit for an open. Perform ADJUSTABLE PEDALS VERIFICATION TEST - VER 1.	All
18	Turn the ignition off. Disconnect the MSMAPM harness connector. Measure the voltage between the MSMAPM Fused B+ circuit and the Ground circuit at the MSMAPM harness connector. Is there battery voltage present? Yes → Refer to symptom *NO RESPONSE FROM ADJUSTABLE PEDALS ASSEMBLY in the BODY COMMUNICATION category. Perform ADJUSTABLE PEDALS VERIFICATION TEST - VER 1. No → Go To 19	All
19	Turn the ignition off. Disconnect the MSMAPM harness connector. Measure the voltage between the MSMAPM Fused B+ circuit and vehicle body ground. Is there battery voltage present? Yes → Repair the Memory Seat Mirror Adjustable Pedals Module Ground circuit for an open. Perform ADJUSTABLE PEDALS VERIFICATION TEST - VER 1. No → Repair the Memory Seat Mirror Adjustable Pedals Module Fused B(+) circuit for an open. Perform ADJUSTABLE PEDALS VERIFICATION TEST - VER 1.	All

Symptom:

***CAN'T SET/RECALL MEMORY POSITIONS**

POSSIBLE CAUSES
DTC ACTIVE
PEDALS OPERATION
BCM OPERATION FAULT
ADJUSTABLE PEDALS SENSOR
ADJUSTABLE PEDALS SENSOR VOLTAGE FAULT
BCM COMMUNICATION FAULT
MSMAPM - INTERNAL FAULT

TEST	ACTION	APPLICABILITY
1	With the DRBIII®, erase DTC's. With the DRBIII®, read the active DTC's. Any active DTC's? Yes → Refer to symptom list for problems related to the active DTC. Perform ADJUSTABLE PEDALS VERIFICATION TEST - VER 1. No → Go To 2	All
2	Attempt to adjust the pedals using the Adjustable Pedals Switch. Do the pedals adjust? Yes → Go To 3 No → Refer to *CAN'T ADJUST PEDALS information for the related symptom(s). Perform ADJUSTABLE PEDALS VERIFICATION TEST - VER 1.	All
3	Attempt to set and recall other memory functions in the vehicle. Can other vehicle memory functions be set and recalled correctly? Yes → Go To 4 No → Check DTC's in the BCM and refer to BODY information for the related symptom(s). Perform ADJUSTABLE PEDALS VERIFICATION TEST - VER 1.	All
4	Turn the ignition off. Turn the ignition on. With the DRBIII® in Sensors, read the pedal position voltage. Monitor the pedal position voltage while adjusting pedals forward and rearward. Is there any change of voltage? Yes → Go To 5 No → Check for proper Adjustable Pedals Sensor installation and alignment. Check wiring and connectors. Repair as necessary. Perform ADJUSTABLE PEDALS VERIFICATION TEST - VER 1.	All

*CAN'T SET/RECALL MEMORY POSITIONS — Continued

TEST	ACTION	APPLICABILITY
5	Does the pedal position voltage increase when moving forward and decrease when moving rearward? Yes → Go To 6 No → Check Adjustable Pedals Sensor and MSMAPM pinouts. Repair as necessary. Perform ADJUSTABLE PEDALS VERIFICATION TEST - VER 1.	All
6	Can the DRBIII® communicate with the BCM? Yes → Replace the Memory Seat Mirror Adjustable Pedals Module in accordance with the Service Information. Perform ADJUSTABLE PEDALS VERIFICATION TEST - VER 1. No → Refer to BODY information for the related symptom(s). Perform ADJUSTABLE PEDALS VERIFICATION TEST - VER 1.	All

Symptom List:

ACCELEROMETER 1
ACCELEROMETER 2
INTERNAL 1
INTERNAL 2
INTERNAL 3
INTERNAL 4
MODULE NOT CONFIGURED FOR OCS
OUTPUT DRIVER 1
OUTPUT DRIVER 2
STORED ENERGY FIRING 1

Test Note: All symptoms listed above are diagnosed using the same tests. The title for the tests will be ACCELEROMETER 1.

When Monitored and Set Condition:

ACCELEROMETER 1

When Monitored: With the ignition on, the module on board diagnostics continuously performs internal circuit tests.

Set Condition: This DTC will set if the module identifies an out of range internal circuit.

ACCELEROMETER 2

When Monitored: With the ignition on, the module on board diagnostics continuously performs internal circuit tests.

Set Condition: This DTC will set if the module identifies an out of range internal circuit.

INTERNAL 1

When Monitored: With the ignition on, the module on board diagnostics continuously performs internal circuit tests.

Set Condition: This DTC will set if the module identifies an out of range internal circuit.

INTERNAL 2

When Monitored: With the ignition on, the module on board diagnostics continuously performs internal circuit tests.

Set Condition: This DTC will set if the module identifies an out of range internal circuit.

INTERNAL 3

When Monitored: With the ignition on, the module on board diagnostics continuously performs internal circuit tests.

Set Condition: This DTC will set if the module identifies an out of range internal circuit.

ACCELEROMETER 1 — Continued

INTERNAL 4

When Monitored: With the ignition on, the module on board diagnostics continuously performs internal circuit tests.

Set Condition: This DTC will set if the module identifies an out of range internal circuit.

MODULE NOT CONFIGURED FOR OCS

When Monitored: With the ignition on, the ACM monitors the PCI Bus for OCM messages.

Set Condition: The code will set, if the ACM is not configured for OCM and OCM PCI Bus messages are on the PCI Bus.

OUTPUT DRIVER 1

When Monitored: With the ignition on, the module on board diagnostics continuously performs internal circuit tests.

Set Condition: This DTC will set if the module identifies an out of range internal circuit.

OUTPUT DRIVER 2

When Monitored: With the ignition on, the module on board diagnostics continuously performs internal circuit tests.

Set Condition: This DTC will set if the module identifies an out of range internal circuit.

STORED ENERGY FIRING 1

When Monitored: With the ignition on, the module on board diagnostics continuously performs internal circuit tests.

Set Condition: This DTC will set if the module identifies an out of range internal circuit.

POSSIBLE CAUSES
OCCUPANT RESTRAINT CONTROLLER - ORC

TEST	ACTION	APPLICABILITY
1	Turn the ignition on. **NOTE: Ensure the battery is fully charged.** **NOTE: For the purpose of this test, the AECM and ACM modules will be referred to as an ORC.** Select the appropriate module and DTC type combination: ORC - ACTIVE DTC Go To 2 ORC - STORED DTC Go To 2 **NOTE: When reconnecting Airbag system components, the ignition must be turned off and the battery must be disconnected.**	All

ACCELEROMETER 1 — Continued

TEST	ACTION	APPLICABILITY
2	**WARNING: TO AVOID PERSONAL INJURY OR DEATH, TURN THE IGNITION OFF, DISCONNECT THE BATTERY AND WAIT TWO MINUTES BEFORE PROCEEDING.** **WARNING: IF THE OCCUPANT CLASSIFICATION CONTROLLER IS DROPPED AT ANY TIME, IT MUST BE REPLACED. FAILURE TO TAKE THE PROPER PRECAUTIONS CAN RESULT IN ACCIDENTAL AIRBAG DEPLOYMENT AND PERSONAL INJURY OR DEATH.** If there are no possible causes remaining, view repair. Repair: Replace the Occupant Restraint Controller in accordance with Service Instructions. Perform __AIRBAG VERIFICATION TEST - VER 1.	All

Symptom List:

AIRBAG WARNING INDICATOR OPEN
AIRBAG WARNING INDICATOR SHORT

Test Note: All symptoms listed above are diagnosed using the same tests. The title for the tests will be AIRBAG WARNING INDICATOR OPEN.

When Monitored and Set Condition:

AIRBAG WARNING INDICATOR OPEN

When Monitored: With ignition on the ACM monitors the PCI Bus for a message from the MIC containing the airbag warning indicator status. The ACM request the warning lamp status from the MIC once every second.

Set Condition: This DTC will set immediately if the indicator status is OPEN.

AIRBAG WARNING INDICATOR SHORT

When Monitored: With ignition on the ACM monitors the PCI Bus for a message from the MIC containing the airbag warning indicator status. The ACM request the warning lamp status from the MIC once every second.

Set Condition: This DTC will set immediately if the indicator status is SHORT.

POSSIBLE CAUSES
MIC, COMMUNICATION FAILURE
WARNING INDICATOR
ACM, WARNING INDICATOR
STORED CODE OR INTERMITTENT CONDITION
ACTIVE CODE PRESENT

TEST	ACTION	APPLICABILITY
1	Turn the ignition on. Ensure the battery is fully charged. **NOTE: For the purpose of this test, the AECM and ORC modules will be referred to as an ACM.** SELECT ACTIVE or STORED DTC: ACM - ACTIVE DTC Go To 2 ACM - STORED DTC Go To 5 **NOTE: When reconnecting Airbag system components, the ignition must be turned off and the battery must be disconnected.**	All

AIRBAG WARNING INDICATOR OPEN — Continued

TEST	ACTION	APPLICABILITY
2	With the DRBIII®, ensure PCI Bus communications with the Instrument Cluster. Is the Instrument Cluster communicating on the PCI Bus? Yes → Go To 3 No → Refer to category COMMUNICATION CATEGORY and select the related symptom NO RESPONSE or INSTRUMENT CLUSTER BUS +/- SIGNAL OPEN. Perform __AIRBAG VERIFICATION TEST - VER 1.	All
3	With the DRBIII® select PASSIVE RESTRAINTS, AIRBAG and MONITOR DISPLAY. Using the DRBIII®, read the WARNING LAMP MONITOR screen. Select the LAMP STATUS displayed on the DRB monitors screen. Observe the Lamp Driver State and Actual Lamp State. Is the LAMP DRIVER and ACTUAL LAMP STATE: OK? YES Go To 4 NO Replace Instrument Cluster. Perform __AIRBAG VERIFICATION TEST - VER 1.	All
4	**WARNING: TO AVOID PERSONAL INJURY OR DEATH, TURN THE IGNITION OFF, DISCONNECT THE BATTERY AND WAIT TWO MINUTES BEFORE PROCEEDING.** **WARNING: IF THE AIRBAG CONTROL MODULE IS DROPPED AT ANY TIME, IT MUST BE REPLACED. FAILURE TO TAKE THE PROPER PRECAUTIONS COULD RESULT IN ACCIDENTAL AIRBAG DEPLOYMENT AND PERSONAL INJURY OR DEATH.** If there are no possible causes remaining, view repair. Repair Replace the Airbag Control Module in accordance with Service Instructions. Perform __AIRBAG VERIFICATION TEST - VER 1.	All

AIRBAG WARNING INDICATOR OPEN — Continued

TEST	ACTION	APPLICABILITY
5	With the DRBIII®, record and erase all DTC's from all Airbag modules. If equipped with Passenger Airbag On - Off switch, read the DTC's in all switch positions. If any ACTIVE codes are present they must be resolved before diagnosing any stored codes. **WARNING: TO AVOID PERSONAL INJURY OR DEATH, TURN THE IGNITION OFF, DISCONNECT THE BATTERY AND WAIT TWO MINUTES BEFORE PROCEEDING.** Using the wiring diagram/schematic as a guide, inspect the wiring and connectors. Look for chaffed, pierced, pinched, or partially broken wires and broken, bent, pushed out, spread, corroded, or contaminated terminals. The following additional checks may assist you in identifying a possible intermittent problem. Reconnect any disconnected components and harness connector. **WARNING: TO AVOID PERSONAL INJURY OR DEATH, TURN THE IGNITION ON, THEN RECONNECT THE BATTERY.** With the DRBIII® monitor active codes as you work through the following steps. **WARNING: TO AVOID PERSONAL INJURY OR DEATH, MAINTAIN A SAFE DISTANCE FROM ALL AIRBAGS WHILE PERFORMING THE FOLLOWING STEPS.** Wiggle the wiring harness and connectors of the related airbag circuit or component. If codes are related to the Driver Airbag circuits, rotate the steering wheel from stop to stop. IF only stored codes return continue the test until the problem area has been isolated In the previous steps you have attempted to recreate the conditions responsible for setting active DTC in question. Are any ACTIVE DTCs present? Yes → Select appropriate symptom from Symptom List. No → No problem found at this time. Erase all codes before returning vehicle to customer.	All

Symptom:
CALIBRATION MISMATCH

When Monitored and Set Condition:

CALIBRATION MISMATCH

When Monitored: With ignition on, the ACM monitors the PCI Bus for the VIN message containing the body style. Note: The VIN message should match the vehicle VIN plate.

Set Condition: If the Body style stored in ACM does not exactly match the vehicle body style indicated by the PCM for 2 consecutive VIN messages, then the fault shall be set.

POSSIBLE CAUSES
PCM, PCI COMMUNICATION FAILURE
PCM VEHICLE IDENTIFICATION NUMBERS INCORRECT OR MISSING
ACM CALIBRATION MISMATCH
STORED CODE OR INTERMITTENT CONDITION
ACTIVE CODE PRESENT

TEST	ACTION	APPLICABILITY
1	Turn the ignition on. **NOTE: Ensure the battery is fully charged.** **NOTE: For the purpose of this test, the AECM and ORC modules will be referred to as an ACM.** SELECT ACTIVE or STORED DTC: ACM - ACTIVE DTC Go To 2 ACM - STORED DTC Go To 5 **NOTE: When reconnecting Airbag system components, the ignition must be turned off and the battery must be disconnected.**	All
2	Turn the ignition on. **NOTE: Ensure the battery is fully charged.** Connect the DRB to the data link connector and select PASSIVE RESTRAINTS, AIRBAG, SYSTEM TEST. With the DRBIII®, read the system test. Does the DRB show PCM Active on the Bus:? Yes → Go To 3 No → Refer to category COMMUNICATION CATEGORY and select the related symptom. Perform __AIRBAG VERIFICATION TEST - VER 1.	All

CALIBRATION MISMATCH — Continued

TEST	ACTION	APPLICABILITY
3	With the DRB select ENGINE MISCELLANEOUS, select MISC FUNCTION, and then CHECK VIN to read the Vehicle Identification Number in the Powertrain Control Module. Compare the VIN displayed on the DRB screen and the Vehicle VIN plate. Does the VIN plate and the PCM VIN match? Yes → Go To 4 No → Replace the Powertrain Control Module and program with the correct vehicle identification number. Perform __AIRBAG VERIFICATION TEST - VER 1.	All
4	**WARNING: TO AVOID PERSONAL INJURY OR DEATH, TURN THE IGNITION OFF, DISCONNECT THE BATTERY AND WAIT TWO MINUTES BEFORE PROCEEDING.** **WARNING: IF THE AIRBAG CONTROL MODULE IS DROPPED AT ANY TIME, IT MUST BE REPLACED. FAILURE TO TAKE THE PROPER PRECAUTIONS COULD RESULT IN ACCIDENTAL AIRBAG DEPLOYMENT AND PERSONAL INJURY OR DEATH.** If there are no possible causes remaining, view repair. Repair Replace the Airbag Control Module in accordance with Service Information. Perform __AIRBAG VERIFICATION TEST - VER 1.	All
5	With the DRBIII®, record and erase all DTC's from all Airbag modules. If equipped with Passenger Airbag On - Off switch, read the DTC's in all switch positions. If any ACTIVE codes are present they must be resolved before diagnosing any stored codes. **WARNING: TO AVOID PERSONAL INJURY OR DEATH, TURN THE IGNITION OFF, DISCONNECT THE BATTERY AND WAIT TWO MINUTES BEFORE PROCEEDING.** Using the wiring diagram/schematic as a guide, inspect the wiring and connectors. Look for chaffed, pierced, pinched, or partially broken wires and broken, bent, pushed out, spread, corroded, or contaminated terminals. The following additional checks may assist you in identifying a possible intermittent problem. Reconnect any disconnected components and harness connector. **WARNING: TO AVOID PERSONAL INJURY OR DEATH, TURN THE IGNITION ON, THEN RECONNECT THE BATTERY.** With the DRBIII® monitor active codes as you work through the following steps. **WARNING: TO AVOID PERSONAL INJURY OR DEATH, MAINTAIN A SAFE DISTANCE FROM ALL AIRBAGS WHILE PERFORMING THE FOLLOWING STEPS.** Wiggle the wiring harness and connectors of the related airbag circuit or component. If codes are related to the Driver Airbag circuits, rotate the steering wheel from stop to stop. IF only stored codes return continue the test until the problem area has been isolated In the previous steps you have attempted to recreate the conditions responsible for setting active DTC in question. Are any ACTIVE DTCs present? Yes → Select appropriate symptom from Symptom List. No → No problem found at this time. Erase all codes before returning vehicle to customer.	All

Symptom:
CLUSTER MESSAGE MISMATCH

When Monitored and Set Condition:

CLUSTER MESSAGE MISMATCH

When Monitored: After the MIC bulb test is completed, the ACM compares the Lamp Request by ACM, On or Off, and the Lamp on by MIC, On or Off, PCI Bus messages. Each message is transmitted one time per second or when a change in the lamp state occur.

Set Condition: If the Lamp Request by ACM, On or Off, and the Lamp on by MIC, On or Off, messages do not match, the code will set.

POSSIBLE CAUSES
MIC DIAGNOSTIC CODES
CLUSTER MESSAGE MISMATCH
STORED CODE OR INTERMITTENT CONDITION
ACM, CLUSTER MESSAGE MISMATCH
ACTIVE CODE PRESENT

TEST	ACTION	APPLICABILITY
1	Turn the ignition on. Ensure the battery is fully charged. **NOTE: For the purpose of this test, the AECM and ORC modules will be referred to as an ACM.** SELECT ACTIVE or STORED DTC: ACM - ACTIVE DTC Go To 2 ACM - STORED DTC Go To 5 **NOTE: When reconnecting Airbag system components, the ignition must be turned off and the battery must be disconnected.**	All
2	Turn the ignition on. With the DRBIII®, read the MIC DTCs. Does the DRBIII® display any active Diagnostic Codes? Yes → Refer to symptom list for problems related to Instrument Cluster. Perform __AIRBAG VERIFICATION TEST - VER 1. No → Go To 3	All

CLUSTER MESSAGE MISMATCH — Continued

TEST	ACTION	APPLICABILITY
3	With the DRBIII® select PASSIVE RESTRAINTS, AIRBAG, MONITOR DISPLAY and WARNING LAMP STATUS. Cycle the ignition key and observe the LAMP ON BY MIC and LAMP REQ BY ACM monitors after the 6 to 8 second indicator test. Does the LAMP ON BY MIC and LAMP REQ BY ACM monitors match? YES Go To 4 NO Replace Mechanical Instrument Cluster. Perform __AIRBAG VERIFICATION TEST - VER 1.	All
4	**WARNING: TO AVOID PERSONAL INJURY OR DEATH, DISCONNECT THE BATTERY AND WAIT TWO MINUTES BEFORE PROCEEDING.** **WARNING: IF THE AIRBAG CONTROL MODULE IS DROPPED AT ANY TIME, IT MUST BE REPLACED. FAILURE TO TAKE THE PROPER PRECAUTIONS COULD RESULT IN ACCIDENTAL AIRBAG DEPLOYMENT AND PERSONAL INJURY OR DEATH.** If there are no possible causes remaining, view repair. Repair Replace the Airbag Control Module in accordance with Service Instructions. Perform __AIRBAG VERIFICATION TEST - VER 1.	All
5	With the DRBIII®, record and erase all DTC's from all Airbag modules. If equipped with Passenger Airbag On - Off switch, read the DTC's in all switch positions. If any ACTIVE codes are present they must be resolved before diagnosing any stored codes. **WARNING: TO AVOID PERSONAL INJURY OR DEATH, TURN THE IGNITION OFF, DISCONNECT THE BATTERY AND WAIT TWO MINUTES BEFORE PROCEEDING.** Using the wiring diagram/schematic as a guide, inspect the wiring and connectors. Look for chaffed, pierced, pinched, or partially broken wires and broken, bent, pushed out, spread, corroded, or contaminated terminals. The following additional checks may assist you in identifying a possible intermittent problem. Reconnect any disconnected components and harness connector. **WARNING: TO AVOID PERSONAL INJURY OR DEATH, TURN THE IGNITION ON, THEN RECONNECT THE BATTERY.** With the DRBIII® monitor active codes as you work through the following steps. **WARNING: TO AVOID PERSONAL INJURY OR DEATH, MAINTAIN A SAFE DISTANCE FROM ALL AIRBAGS WHILE PERFORMING THE FOLLOWING STEPS.** Wiggle the wiring harness and connectors of the related airbag circuit or component. If codes are related to the Driver Airbag circuits, rotate the steering wheel from stop to stop. IF only stored codes return continue the test until the problem area has been isolated In the previous steps you have attempted to recreate the conditions responsible for setting active DTC in question. Are any ACTIVE DTCs present? Yes → Select appropriate symptom from Symptom List. No → No problem found at this time. Erase all codes before returning vehicle to customer.	All

Symptom:
DRIVER KNEE BLOCKER CIRCUIT OPEN

When Monitored and Set Condition:

DRIVER KNEE BLOCKER CIRCUIT OPEN

When Monitored: With the ignition on, the ACM monitors the resistance of the Driver Knee Blocker Squib 1 circuits.

Set Condition: The ACM detects an open circuit or high resistance in the Driver Knee Blocker Squib 1 circuits.

POSSIBLE CAUSES
DRIVER KNEE BLOCKER AIRBAG SQUIB 1 CIRCUIT OPEN
DRIVER KNEE BLOCKER SQUIB 1 LINE 1 OR LINE 2 CIRCUIT OPEN
ACM, DRIVER KNEE BLOCKER SQUIB 1 CIRCUIT OPEN
STORED CODE OR INTERMITTENT CONDITION
ACTIVE CODE PRESENT

TEST	ACTION	APPLICABILITY
1	Turn the ignition on. **NOTE: Ensure the battery is fully charged.** **NOTE: For the purpose of this test, the AECM and ORC modules will be referred to as an ACM.** SELECT ACTIVE or STORED DTC: ACM - ACTIVE DTC Go To 2 ACM - STORED DTC Go To 5 **NOTE: When reconnecting Airbag system components, the ignition must be turned off and the battery must be disconnected.**	All

DRIVER KNEE BLOCKER CIRCUIT OPEN — Continued

TEST	ACTION	APPLICABILITY
2	**WARNING: TO AVOID PERSONAL INJURY OR DEATH, TURN THE IGNITION OFF, DISCONNECT THE BATTERY AND WAIT TWO MINUTES BEFORE PROCEEDING.** Disconnect the Driver Knee Blocker Airbag connector. **WARNING: TO AVOID PERSONAL INJURY OR DEATH, DO NOT PLACE AN INTACT UNDEPLOYED AIRBAG FACE DOWN ON A HARD SURFACE, THE AIRBAG WILL PROPEL INTO THE AIR IF ACCIDENTALLY DEPLOYED.** **NOTE: Check connectors - Clean and repair as necessary.** Connect the appropriate Load Tool to the Driver Knee Blocker Airbag connector. **WARNING: TO AVOID PERSONAL INJURY OR DEATH, TURN IGNITION ON, THEN RECONNECT THE BATTERY.** With the DRBIII®, read the active Airbag Control Module DTC's. Does the DRBIII® show DRIVER KNEE BLOCKER SQUIB 1 CIRCUIT OPEN? Yes → Go To 3 No → Replace the Driver Knee Blocker Airbag in accordance with the Service Information. Perform __AIRBAG VERIFICATION TEST - VER 1.	All
3	**WARNING: TO AVOID PERSONAL INJURY OR DEATH, TURN THE IGNITION OFF, DISCONNECT THE BATTERY AND WAIT TWO MINUTES BEFORE PROCEEDING.** Disconnect the Load Tool from the Driver Knee Blocker Airbag connector. Disconnect the Airbag Control Module connector. **NOTE: Check connectors - Clean and repair as necessary.** Connect the appropriate Load Tool ACM Adaptor to the Airbag Control Module connector. Measure the resistance of the Driver Knee Blocker Squib 1 Line 1 and Line 2 circuits between the ACM Adaptor and the Driver Knee Blocker Airbag connector. Is the resistance below 1.0 ohms on both circuits? Yes → Go To 4 No → Repair open or high resistance in Driver Knee Blocker Squib 1 Line 1 or Line 2 circuits. Perform __AIRBAG VERIFICATION TEST - VER 1.	All
4	**WARNING: IF THE AIRBAG CONTROL MODULE IS DROPPED AT ANY TIME, IT MUST BE REPLACED. FAILURE TO TAKE THE PROPER PRECAUTIONS COULD RESULT IN ACCIDENTAL AIRBAG DEPLOYMENT AND PERSONAL INJURY OR DEATH.** If there are no possible causes remaining, view repair. Repair: Replace the Airbag Control Module in accordance with Service Instructions. Perform __AIRBAG VERIFICATION TEST - VER 1.	All

DRIVER KNEE BLOCKER CIRCUIT OPEN — Continued

TEST	ACTION	APPLICABILITY
5	With the DRBIII®, record and erase all DTC's from all Airbag modules. If equipped with Passenger Airbag On - Off switch, read the DTC's in all switch positions. If any ACTIVE codes are present they must be resolved before diagnosing any stored codes. **WARNING: TO AVOID PERSONAL INJURY OR DEATH, TURN THE IGNITION OFF, DISCONNECT THE BATTERY AND WAIT TWO MINUTES BEFORE PROCEEDING.** Using the wiring diagram/schematic as a guide, inspect the wiring and connectors. Look for chaffed, pierced, pinched, or partially broken wires and broken, bent, pushed out, spread, corroded, or contaminated terminals. The following additional checks may assist you in identifying a possible intermittent problem. Reconnect any disconnected components and harness connector. **WARNING: TO AVOID PERSONAL INJURY OR DEATH, TURN THE IGNITION ON, THEN RECONNECT THE BATTERY.** With the DRBIII® monitor active codes as you work through the following steps. **WARNING: TO AVOID PERSONAL INJURY OR DEATH, MAINTAIN A SAFE DISTANCE FROM ALL AIRBAGS WHILE PERFORMING THE FOLLOWING STEPS.** Wiggle the wiring harness and connectors of the related airbag circuit or component. If codes are related to the Driver Airbag circuits, rotate the steering wheel from stop to stop. IF only stored codes return continue the test until the problem area has been isolated In the previous steps you have attempted to recreate the conditions responsible for setting active DTC in question. Are any ACTIVE DTCs present? Yes → Select appropriate symptom from Symptom List. No → No problem found at this time. Erase all codes before returning vehicle to customer.	All

Symptom:
DRIVER KNEE BLOCKER CIRCUIT SHORT

When Monitored and Set Condition:

DRIVER KNEE BLOCKER CIRCUIT SHORT

When Monitored: With the ignition on, the ACM monitors the resistance of the Driver Knee Blocker Squib 1 circuits.

Set Condition: With the ignition on, the ACM monitors the resistance of the Driver Knee Blocker Squib 1 circuits.

POSSIBLE CAUSES
DRIVER KNEE BLOCKER SQUIB 1 CIRCUIT SHORT
ACM, DRIVER KNEE BLOCKER SQUIB 1 CIRCUIT SHORT
DRIVER KNEE BLOCKER SQUIB 1 LINE 1 SHORT TO LINE 2
STORED CODE OR INTERMITTENT CONDITION
ACTIVE CODE PRESENT

TEST	ACTION	APPLICABILITY
1	Turn the ignition on. **NOTE: Ensure that the battery is fully charged.** **NOTE: For the purpose of this test, the AECM and ORC modules will be referred to as an ACM.** SELECT ACTIVE or STORED DTC: ACM - ACTIVE DTC Go To 2 ACM - STORED DTC Go To 5 **NOTE: When reconnecting Airbag system components, the ignition must be turned off and the battery must be disconnected.**	All

DRIVER KNEE BLOCKER CIRCUIT SHORT — Continued

TEST	ACTION	APPLICABILITY
2	**WARNING: TO AVOID PERSONAL INJURY OR DEATH, TURN THE IGNITION OFF, DISCONNECT THE BATTERY AND WAIT TWO MINUTES BEFORE PROCEEDING.** Disconnect the Driver Knee Blocker Airbag connector. **WARNING: DO NOT PLACE AN INTACT UNDEPLOYED AIRBAG FACE DOWN ON A HARD SURFACE, THE AIRBAG WILL PROPEL INTO THE AIR IF ACCIDENTALLY DEPLOYED, AND COULD RESULT IN SERIOUS OR FATAL INJURY.** **NOTE: Check connectors - Clean and repair as necessary.** Connect the appropriate Load Tool to the Driver Knee Blocker Airbag connector. **WARNING: TO AVOID PERSONAL INJURY OR DEATH, TURN THE IGNITION ON, THEN RECONNECT THE BATTERY.** With the DRBIII®, read the active Airbag Control Module DTC's. Does the DRBIII® show DRIVER KNEE BLOCKER SQUIB 1 CIRCUIT SHORT? Yes → Go To 3 No → Replace Driver Knee Blocker Airbag in accordance with the Service Information. Perform __AIRBAG VERIFICATION TEST - VER 1.	All
3	**WARNING: TO AVOID PERSONAL INJURY OR DEATH, TURN THE IGNITION OFF, DISCONNECT THE BATTERY AND WAIT TWO MINUTES BEFORE PROCEEDING.** Disconnect the Load Tool from the Driver Knee Blocker Airbag connector. Disconnect the Airbag Control Module connector. **NOTE: Check connectors - Clean and repair as necessary.** Connect the appropriate Load Tool ACM Adapter to the Airbag Control Module connector. Measure the resistance between Driver Knee Blocker Squib 1 Line 1 and Line 2 circuits at the Driver Knee Blocker Airbag connector. Is the resistance below 10K ohms? Yes → Repair Driver Knee Blocker Squib 1 Line 1 circuit short to Squib 1 Line 2 circuit. Perform __AIRBAG VERIFICATION TEST - VER 1. No → Go To 4	All
4	**WARNING: IF THE AIRBAG CONTROL MODULE IS DROPPED AT ANY TIME, IT MUST BE REPLACED. FAILURE TO TAKE THE PROPER PRECAUTIONS COULD RESULT IN ACCIDENTAL AIRBAG DEPLOYMENT AND PERSONAL INJURY OR DEATH.** If there are no possible causes remaining, view repair. Repair: Replace the Airbag Control Module in accordance with Service Instructions. Perform __AIRBAG VERIFICATION TEST - VER 1.	All

DRIVER KNEE BLOCKER CIRCUIT SHORT — Continued

TEST	ACTION	APPLICABILITY
5	With the DRBIII®, record and erase all DTC's from all Airbag modules. If equipped with Passenger Airbag On - Off switch, read the DTC's in all switch positions. If any ACTIVE codes are present they must be resolved before diagnosing any stored codes. **WARNING: TO AVOID PERSONAL INJURY OR DEATH, TURN THE IGNITION OFF, DISCONNECT THE BATTERY AND WAIT TWO MINUTES BEFORE PROCEEDING.** Using the wiring diagram/schematic as a guide, inspect the wiring and connectors. Look for chaffed, pierced, pinched, or partially broken wires and broken, bent, pushed out, spread, corroded, or contaminated terminals. The following additional checks may assist you in identifying a possible intermittent problem. Reconnect any disconnected components and harness connector. **WARNING: TO AVOID PERSONAL INJURY OR DEATH, TURN THE IGNITION ON, THEN RECONNECT THE BATTERY.** With the DRBIII® monitor active codes as you work through the following steps. **WARNING: TO AVOID PERSONAL INJURY OR DEATH, MAINTAIN A SAFE DISTANCE FROM ALL AIRBAGS WHILE PERFORMING THE FOLLOWING STEPS.** Wiggle the wiring harness and connectors of the related airbag circuit or component. If codes are related to the Driver Airbag circuits, rotate the steering wheel from stop to stop. IF only stored codes return continue the test until the problem area has been isolated In the previous steps you have attempted to recreate the conditions responsible for setting active DTC in question. Are any ACTIVE DTCs present? Yes → Select appropriate symptom from Symptom List. No → No problem found at this time. Erase all codes before returning vehicle to customer.	All

Symptom:
DRIVER KNEE BLOCKER SHORT TO BATTERY

When Monitored and Set Condition:

DRIVER KNEE BLOCKER SHORT TO BATTERY

When Monitored: With the ignition on, the ACM monitors the voltage of the Driver Knee Blocker Squib 1 circuits.

Set Condition: The ACM has detected high voltage on the Driver Knee Blocker Squib 1 circuits.

POSSIBLE CAUSES
DRIVER KNEE BLOCKER SQUIB 1 SHORT TO BATTERY
DRIVER KNEE BLOCKER SQUIB 1 LINE 1 OR LINE 2 SHORT TO BATTERY
ACM, DRIVER KNEE BLOCKER SQUIB 1 SHORT TO BATTERY
STORED CODE OR INTERMITTENT CONDITION
ACTIVE CODE PRESENT

TEST	ACTION	APPLICABILITY
1	Turn the ignition on. **NOTE: Ensure that the battery is fully charged.** **NOTE: For the purpose of this test, the AECM and ORC modules will be referred to as an ACM.** SELECT ACTIVE or STORED DTC: ACM - ACTIVE DTC Go To 2 ACM - STORED DTC Go To 5 **NOTE: When reconnecting Airbag system components, the ignition must be turned off and the battery must be disconnected.**	All

DRIVER KNEE BLOCKER SHORT TO BATTERY — Continued

TEST	ACTION	APPLICABILITY
2	**WARNING: TO AVOID PERSONAL INJURY OR DEATH, DISCONNECT THE BATTERY AND WAIT TWO MINUTES BEFORE PROCEEDING.** Disconnect the Driver Knee Blocker Airbag connector. **NOTE: Check connectors - Clean and repair as necessary.** **WARNING: TO AVOID PERSONAL INJURY OR DEATH, DO NOT PLACE AN INTACT UNDEPLOYED AIRBAG FACE DOWN ON A HARD SURFACE, THE AIRBAG WILL PROPEL INTO THE AIR IF ACCIDENTALLY DEPLOYED.** Connect the appropriate Load Tool to the Driver Knee Blocker Airbag connector. **WARNING: TO AVOID PERSONAL INJURY OR DEATH, TURN THE IGNITION ON, THEN RECONNECT THE BATTERY.** With the DRBIII®, read the active Airbag Control Module DTC's. Does the DRBIII® show DRIVER KNEE BLOCKER SQUIB 1 SHORT TO BATTERY? Yes → Go To 3 No → Replace Driver Knee Blocker Airbag in accordance with the Service Information. Perform __AIRBAG VERIFICATION TEST - VER 1.	All
3	**WARNING: TO AVOID PERSONAL INJURY OR DEATH, TURN THE IGNITION OFF, DISCONNECT THE BATTERY AND WAIT TWO MINUTES BEFORE PROCEEDING.** Disconnect the Load Tool from the Driver Knee Blocker Airbag connector. Disconnect the Airbag Control Module connector. **NOTE: Check connectors - Clean and repair as necessary.** Connect the appropriate Load Tool ACM Adaptor to the Airbag Control Module connector(s) **WARNING: TO AVOID PERSONAL INJURY OR DEATH, TURN IGNITION ON, THEN RECONNECT THE BATTERY.** Measure the voltage on the Driver Knee Blocker Squib 1 Line 1 and Line 2 circuits between the Driver Knee Blocker Airbag connector and ground. Is there any voltage present? Yes → Repair Driver Knee Blocker Squib 1 Line 1 or Line 2 circuit short to battery. Perform __AIRBAG VERIFICATION TEST - VER 1. No → Go To 4	All
4	**WARNING: TO AVOID PERSONAL INJURY OR DEATH, TURN THE IGNITION OFF, DISCONNECT THE BATTERY AND WAIT TWO MINUTES BEFORE PROCEEDING.** **WARNING: IF THE AIRBAG CONTROL MODULE IS DROPPED AT ANY TIME, IT MUST BE REPLACED. FAILURE TO TAKE THE PROPER PRECAUTIONS COULD RESULT IN ACCIDENTAL AIRBAG DEPLOYMENT AND PERSONAL INJURY OR DEATH.** If there are no possible causes remaining, view repair. Repair: Replace the Airbag Control Module in accordance with Service Instructions. Perform __AIRBAG VERIFICATION TEST - VER 1.	All

DRIVER KNEE BLOCKER SHORT TO BATTERY — Continued

TEST	ACTION	APPLICABILITY
5	With the DRBIII®, record and erase all DTC's from all Airbag modules. If equipped with Passenger Airbag On - Off switch, read the DTC's in all switch positions. If any ACTIVE codes are present they must be resolved before diagnosing any stored codes. **WARNING: TO AVOID PERSONAL INJURY OR DEATH, TURN THE IGNITION OFF, DISCONNECT THE BATTERY AND WAIT TWO MINUTES BEFORE PROCEEDING.** Using the wiring diagram/schematic as a guide, inspect the wiring and connectors. Look for chaffed, pierced, pinched, or partially broken wires and broken, bent, pushed out, spread, corroded, or contaminated terminals. The following additional checks may assist you in identifying a possible intermittent problem. Reconnect any disconnected components and harness connector. **WARNING: TO AVOID PERSONAL INJURY OR DEATH, TURN THE IGNITION ON, THEN RECONNECT THE BATTERY.** With the DRBIII® monitor active codes as you work through the following steps. **WARNING: TO AVOID PERSONAL INJURY OR DEATH, MAINTAIN A SAFE DISTANCE FROM ALL AIRBAGS WHILE PERFORMING THE FOLLOWING STEPS.** Wiggle the wiring harness and connectors of the related airbag circuit or component. If codes are related to the Driver Airbag circuits, rotate the steering wheel from stop to stop. IF only stored codes return continue the test until the problem area has been isolated In the previous steps you have attempted to recreate the conditions responsible for setting active DTC in question. Are any ACTIVE DTCs present? Yes → Select appropriate symptom from Symptom List. No → No problem found at this time. Erase all codes before returning vehicle to customer.	All

Symptom:
DRIVER KNEE BLOCKER SHORT TO GROUND

When Monitored and Set Condition:

DRIVER KNEE BLOCKER SHORT TO GROUND

When Monitored: With the ignition on, the ACM monitors the resistance of the Driver Knee Blocker Squib 1 circuits.

Set Condition: When the ACM detects low resistance in either Driver Knee Blocker Squib 1 circuits.

POSSIBLE CAUSES
DRIVER KNEE BLOCKER AIRBAG SQUIB 1 SHORT TO GROUND
DRIVER KNEE BLOCKER SQUIB 1 LINE 1 AND LINE 2 SHORT TO GROUND
ACM, DRIVER KNEE BLOCKER SQUIB 1 CIRCUIT SHORT TO GROUND
STORED CODE OR INTERMITTENT CONDITION
ACTIVE CODE PRESENT

TEST	ACTION	APPLICABILITY
1	Turn the ignition on. **NOTE: Ensure that the battery is fully charged.** **NOTE: Connect the appropriate Load Tool to the Driver Knee Blocker Airbag connector.** SELECT ACTIVE or STORED DTC: ACM - ACTIVE DTC Go To 2 ACM - STORED DTC Go To 5 **NOTE: When reconnecting Airbag system components, the ignition must be turned off and the battery must be disconnected.**	All

DRIVER KNEE BLOCKER SHORT TO GROUND — Continued

TEST	ACTION	APPLICABILITY
2	**WARNING: TO AVOID PERSONAL INJURY OR DEATH, TURN THE IGNITION OFF, DISCONNECT THE BATTERY AND WAIT TWO MINUTES BEFORE PROCEEDING.** Disconnect the Driver Knee Blocker Airbag connector. **NOTE: Check connectors - Clean and repair as necessary.** **WARNING: TO AVOID PERSONAL INJURY OR DEATH, DO NOT PLACE AN INTACT UNDEPLOYED AIRBAG FACE DOWN ON A HARD SURFACE, THE AIRBAG WILL PROPEL INTO THE AIR IF ACCIDENTALLY DEPLOYED.** Connect the appropriate Load Tool to the Driver Knee Blocker Airbag connector. **WARNING: TO AVOID PERSONAL INJURY OR DEATH, TURN THE IGNITION ON, THEN RECONNECT THE BATTERY.** With the DRBIII®, read the active Airbag Control Module DTC's. Does the DRBIII® show DRIVER KNEE BLOCKER SQUIB 1 SHORT TO GROUND? Yes → Go To 3 No → Replace the Driver Knee Blocker Airbag in accordance with the Service Information. Perform __AIRBAG VERIFICATION TEST - VER 1.	All
3	**WARNING: TO AVOID PERSONAL INJURY OR DEATH, TURN THE IGNITION OFF, DISCONNECT THE BATTERY AND WAIT TWO MINUTES BEFORE PROCEEDING.** Disconnect the Load Tool from the Driver Knee Blocker Airbag connector. Disconnect the Airbag Control Module connector. **NOTE: Check connectors - Clean repair as necessary.** Connect the appropriate Load Tool ACM Adaptor to the Airbag Control Module connector. Measure the resistance of the Driver Knee Blocker Squib 1 Line 1 or Line 2 circuits between the Driver Knee Blocker Airbag Module Connector and ground. Is the resistance below 10K ohms on either circuit? Yes → Repair Driver Knee Blocker Squib 1 Line 1 and Line 2 circuits for a short to ground. Perform __AIRBAG VERIFICATION TEST - VER 1. No → Go To 4	All
4	**WARNING: IF THE AIRBAG CONTROL MODULE IS DROPPED AT ANY TIME, IT MUST BE REPLACED. FAILURE TO TAKE THE PROPER PRECAUTIONS COULD RESULT IN ACCIDENTAL AIRBAG DEPLOYMENT AND PERSONAL INJURY OR DEATH.** If there are no possible causes remaining, view repair. Repair: Replace the Airbag Control Module in accordance with Service Instructions. Perform __AIRBAG VERIFICATION TEST - VER 1.	All

DRIVER KNEE BLOCKER SHORT TO GROUND — Continued

TEST	ACTION	APPLICABILITY
5	With the DRBIII®, record and erase all DTC's from all Airbag modules. If equipped with Passenger Airbag On - Off switch, read the DTC's in all switch positions. If any ACTIVE codes are present they must be resolved before diagnosing any stored codes. **WARNING: TO AVOID PERSONAL INJURY OR DEATH, TURN THE IGNITION OFF, DISCONNECT THE BATTERY AND WAIT TWO MINUTES BEFORE PROCEEDING.** Using the wiring diagram/schematic as a guide, inspect the wiring and connectors. Look for chaffed, pierced, pinched, or partially broken wires and broken, bent, pushed out, spread, corroded, or contaminated terminals. The following additional checks may assist you in identifying a possible intermittent problem. Reconnect any disconnected components and harness connector. **WARNING: TO AVOID PERSONAL INJURY OR DEATH, TURN THE IGNITION ON, THEN RECONNECT THE BATTERY.** With the DRBIII® monitor active codes as you work through the following steps. **WARNING: TO AVOID PERSONAL INJURY OR DEATH, MAINTAIN A SAFE DISTANCE FROM ALL AIRBAGS WHILE PERFORMING THE FOLLOWING STEPS.** Wiggle the wiring harness and connectors of the related airbag circuit or component. If codes are related to the Driver Airbag circuits, rotate the steering wheel from stop to stop. IF only stored codes return continue the test until the problem area has been isolated In the previous steps you have attempted to recreate the conditions responsible for setting active DTC in question. Are any ACTIVE DTCs present? Yes → Select appropriate symptom from Symptom List. No → No problem found at this time. Erase all codes before returning vehicle to customer.	All

Symptom:
DRIVER SEAT BELT SWITCH CIRCUIT OPEN

When Monitored and Set Condition:

DRIVER SEAT BELT SWITCH CIRCUIT OPEN

When Monitored: With the ignition on the ACM monitors the Seat Belt Switch circuit for an open condition.

Set Condition: The code will set if the ACM does not detect the correct circuit voltage.

POSSIBLE CAUSES
DRIVER SEAT BELT SWITCH OPEN
DRIVER SEAT BELT SWITCH CIRCUITS OPEN
ACM, DRIVER SEAT BELT SWITCH CIRCUIT OPEN
STORED CODE OR INTERMITTENT CONDITION
ACTIVE CODE PRESENT

TEST	ACTION	APPLICABILITY
1	Turn the ignition on. **NOTE: Ensure the battery is fully charged.** **NOTE: For the purpose of this test, the AECM and ORC modules will be referred to as an ACM.** SELECT ACTIVE or STORED DTC: ACM - ACTIVE DTC Go To 2 ACM - STORED DTC Go To 5 **NOTE: When reconnecting Airbag system components, the ignition must be turned off and the battery must be disconnected.**	All
2	Turn the ignition off. Disconnect the Driver Seat Belt Switch. **NOTE: Check connectors - Clean and repair as necessary.** Turn the ignition on. Measure the voltage between Driver Seat Belt Switch Line 1 and Line 2 circuits at the SBS connector. Is there any voltage present? Yes → Replace the Driver Seat Belt Switch Buckle Assembly. Perform __AIRBAG VERIFICATION TEST - VER 1. No → Go To 3	All

DRIVER SEAT BELT SWITCH CIRCUIT OPEN — Continued

TEST	ACTION	APPLICABILITY
3	**WARNING: TO AVOID PERSONAL INJURY OR DEATH, TURN IGNITION OFF, DISCONNECT THE BATTERY AND WAIT TWO MINUTES BEFORE PROCEEDING.** Disconnect the Airbag Control Module connector(s). **NOTE: Check connectors - Clean and repair as necessary.** Connect the appropriate Load Tool Adaptor to the Airbag Control Module connector. Measure the resistance of the Driver SBS Line 1 and line 2 circuits between the Driver SBS harness connector and Airbag Load Tool adaptor. Is the resistance of both circuits below 10K ohms? Yes → Go To 4 No → Repair the open Driver Seat Belt Switch Line 1 or Line 2. Perform __AIRBAG VERIFICATION TEST - VER 1.	All
4	**WARNING: TO AVOID PERSONAL INJURY OR DEATH, TURN THE IGNITION OFF, DISCONNECT THE BATTERY AND WAIT TWO MINUTES BEFORE PROCEEDING.** **WARNING: IF THE AIRBAG CONTROL MODULE IS DROPPED AT ANY TIME, IT MUST BE REPLACED. FAILURE TO TAKE THE PROPER PRECAUTIONS COULD RESULT IN ACCIDENTAL AIRBAG DEPLOYMENT AND PERSONAL INJURY OR DEATH.** If there are no possible causes remaining, view repair. Repair: Replace the Airbag Control Module in accordance with the Service information. Perform __AIRBAG VERIFICATION TEST - VER 1.	All

DRIVER SEAT BELT SWITCH CIRCUIT OPEN — Continued

TEST	ACTION	APPLICABILITY
5	With the DRBIII®, record and erase all DTC's from all Airbag modules. If equipped with Passenger Airbag On - Off switch, read the DTC's in all switch positions. If any ACTIVE codes are present they must be resolved before diagnosing any stored codes. **WARNING: TO AVOID PERSONAL INJURY OR DEATH, TURN THE IGNITION OFF, DISCONNECT THE BATTERY AND WAIT TWO MINUTES BEFORE PROCEEDING.** Using the wiring diagram/schematic as a guide, inspect the wiring and connectors. Look for chaffed, pierced, pinched, or partially broken wires and broken, bent, pushed out, spread, corroded, or contaminated terminals. The following additional checks may assist you in identifying a possible intermittent problem. Reconnect any disconnected components and harness connector. **WARNING: TO AVOID PERSONAL INJURY OR DEATH, TURN THE IGNITION ON, THEN RECONNECT THE BATTERY.** With the DRBIII® monitor active codes as you work through the following steps. **WARNING: TO AVOID PERSONAL INJURY OR DEATH, MAINTAIN A SAFE DISTANCE FROM ALL AIRBAGS WHILE PERFORMING THE FOLLOWING STEPS.** Wiggle the wiring harness and connectors of the related airbag circuit or component. If codes are related to the Driver Airbag circuits, rotate the steering wheel from stop to stop. IF only stored codes return continue the test until the problem area has been isolated In the previous steps you have attempted to recreate the conditions responsible for setting active DTC in question. Are any ACTIVE DTCs present? Yes → Select appropriate symptom from Symptom List. No → No problem found at this time. Erase all codes before returning vehicle to customer.	All

Symptom:
DRIVER SEAT BELT SWITCH SHORT TO BATTERY

When Monitored and Set Condition:

DRIVER SEAT BELT SWITCH SHORT TO BATTERY

When Monitored: With the ignition on the ACM monitors the Seat Belt Buckle Switch circuit for an short to battery.

Set Condition: The code will set if the ACM detects high circuit voltage.

POSSIBLE CAUSES
DRIVER SEAT BELT SWITCH SHORT TO BATTERY
DRIVER SEAT BELT SWITCH CIRCUITS SHORT TO BATTERY
ACM, DRIVER SEAT BELT SWITCH SHORT TO BATTERY
STORED CODE OR INTERMITTENT CONDITION
ACTIVE CODE PRESENT

TEST	ACTION	APPLICABILITY
1	Turn the ignition on. **NOTE: Ensure the battery is fully charged.** **NOTE: For the purpose of this test, the AECM and ORC modules will be referred to as an ACM.** SELECT ACTIVE or STORED DTC: ACM - ACTIVE DTC Go To 2 ACM - STORED DTC Go To 5 **NOTE: When reconnecting Airbag system components, the ignition must be turned off and the battery must be disconnected.**	All
2	Turn the ignition off. Disconnect the Driver Seat Belt Switch. **NOTE: Check connectors - Clean and repair as necessary.** Turn the ignition on. With the DRBIII®, read the active Airbag Control Module DTC's. Does the DRB show DRIVER SEAT BELT SWITCH CIRCUIT OPEN? Yes → Replace the Driver Seat Belt Switch. Perform __AIRBAG VERIFICATION TEST - VER 1. No → Go To 3	All

DRIVER SEAT BELT SWITCH SHORT TO BATTERY — Continued

TEST	ACTION	APPLICABILITY
3	**WARNING: TO AVOID PERSONAL INJURY OR DEATH, TURN IGNITION OFF, DISCONNECT THE BATTERY AND WAIT TWO MINUTES BEFORE PROCEEDING.** Disconnect the Airbag Control Module connector(s). **NOTE: Check connectors - Clean and repair as necessary.** **WARNING: TO AVOID PERSONAL INJURY OR DEATH, IF THE AIRBAG CONTROL MODULE IS DROPPED AT ANY TIME, IT MUST BE REPLACED.** Connect the appropriate Load Tool Adaptor to the Airbag Control Module connector. **WARNING: TO AVOID PERSONAL INJURY OR DEATH, TURN THE IGNITION ON, THEN RECONNECT THE BATTERY.** Measure the voltage on the Driver SBS Line 1 and line 2 circuits at the Driver SBS connector. Is there any voltage present? Yes → Repair the Driver Seat Belt Switch line 1 or line 2 shorted to battery. Perform __AIRBAG VERIFICATION TEST - VER 1. No → Go To 4	All
4	**WARNING: TO AVOID PERSONAL INJURY OR DEATH, TURN THE IGNITION OFF, DISCONNECT THE BATTERY AND WAIT TWO MINUTES BEFORE PROCEEDING.** **WARNING: IF THE AIRBAG CONTROL MODULE IS DROPPED AT ANY TIME, IT MUST BE REPLACED. FAILURE TO TAKE THE PROPER PRECAUTIONS COULD RESULT IN ACCIDENTAL AIRBAG DEPLOYMENT AND PERSONAL INJURY OR DEATH.** If there are no possible causes remaining, view repair. Repair: Replace the Airbag Control Module in accordance with the Service information. Perform __AIRBAG VERIFICATION TEST - VER 1.	All

DRIVER SEAT BELT SWITCH SHORT TO BATTERY — Continued

TEST	ACTION	APPLICABILITY
5	With the DRBIII®, record and erase all DTC's from all Airbag modules. If equipped with Passenger Airbag On - Off switch, read the DTC's in all switch positions. If any ACTIVE codes are present they must be resolved before diagnosing any stored codes. **WARNING: TO AVOID PERSONAL INJURY OR DEATH, TURN THE IGNITION OFF, DISCONNECT THE BATTERY AND WAIT TWO MINUTES BEFORE PROCEEDING.** Using the wiring diagram/schematic as a guide, inspect the wiring and connectors. Look for chaffed, pierced, pinched, or partially broken wires and broken, bent, pushed out, spread, corroded, or contaminated terminals. The following additional checks may assist you in identifying a possible intermittent problem. Reconnect any disconnected components and harness connector. **WARNING: TO AVOID PERSONAL INJURY OR DEATH, TURN THE IGNITION ON, THEN RECONNECT THE BATTERY.** With the DRBIII® monitor active codes as you work through the following steps. **WARNING: TO AVOID PERSONAL INJURY OR DEATH, MAINTAIN A SAFE DISTANCE FROM ALL AIRBAGS WHILE PERFORMING THE FOLLOWING STEPS.** Wiggle the wiring harness and connectors of the related airbag circuit or component. If codes are related to the Driver Airbag circuits, rotate the steering wheel from stop to stop. IF only stored codes return continue the test until the problem area has been isolated In the previous steps you have attempted to recreate the conditions responsible for setting active DTC in question. Are any ACTIVE DTCs present? Yes → Select appropriate symptom from Symptom List. No → No problem found at this time. Erase all codes before returning vehicle to customer.	All

Symptom:
DRIVER SEAT BELT SWITCH SHORT TO GROUND

When Monitored and Set Condition:

DRIVER SEAT BELT SWITCH SHORT TO GROUND

When Monitored: With the ignition on the ACM monitors the Seat Belt Buckle Switch circuit for a shorted together or shorted to ground condition.

Set Condition: The code will set if the ACM detects low circuit voltage.

POSSIBLE CAUSES
DRIVER SEAT BELT SWITCH SHORT TO GROUND
DRIVER SEAT BELT SWITCH CIRCUITS SHORT TO GROUND
ACM, DRIVER SEAT BELT SWITCH SHORT TO GROUND
STORED CODE OR INTERMITTENT CONDITION
ACTIVE CODE PRESENT

TEST	ACTION	APPLICABILITY
1	Turn the ignition on. **NOTE: Ensure the battery is fully charged.** **NOTE: For the purpose of this test, the AECM and ORC modules will be referred to as an ACM.** SELECT ACTIVE or STORED DTC: ACM - ACTIVE DTC Go To 2 ACM - STORED DTC Go To 5 **NOTE: When reconnecting Airbag system components, the ignition must be turned off and the battery must be disconnected.**	All
2	Turn Ignition off. Disconnect the Driver Seat Belt Switch connector(s). **NOTE: Check connectors - Clean and repair as necessary.** Turn Ignition on. With the DRBIII®, read the active Airbag Control Module DTC's. Does the DRB show DRIVER SEAT BELT CIRCUIT OPEN? Yes → Replace the Driver Seat Belt Switch Buckle Assembly. Perform __AIRBAG VERIFICATION TEST - VER 1. No → Go To 3	All

DRIVER SEAT BELT SWITCH SHORT TO GROUND — Continued

TEST	ACTION	APPLICABILITY
3	Measure the resistance of the Driver SBS Line 1 and Line 2 circuits between the Driver SBS connector and ground. Is the resistance below 10K ohms on either circuit? Yes → Repair the Driver Seat Belt Switch line 1 or line 2 shorted to ground. Perform __AIRBAG VERIFICATION TEST - VER 1. No → Go To 4	All
4	**WARNING: IF THE AIRBAG CONTROL MODULE IS DROPPED AT ANY TIME, IT MUST BE REPLACED. FAILURE TO TAKE THE PROPER PRECAUTIONS COULD RESULT IN ACCIDENTAL AIRBAG DEPLOYMENT AND PERSONAL INJURY OR DEATH.** If there are no possible causes remaining, view repair. Repair: Replace the Airbag Control Module in accordance with the Service information. Perform __AIRBAG VERIFICATION TEST - VER 1.	All
5	With the DRBIII®, record and erase all DTC's from all Airbag modules. If equipped with Passenger Airbag On - Off switch, read the DTC's in all switch positions. If any ACTIVE codes are present they must be resolved before diagnosing any stored codes. **WARNING: TO AVOID PERSONAL INJURY OR DEATH, TURN THE IGNITION OFF, DISCONNECT THE BATTERY AND WAIT TWO MINUTES BEFORE PROCEEDING.** Using the wiring diagram/schematic as a guide, inspect the wiring and connectors. Look for chaffed, pierced, pinched, or partially broken wires and broken, bent, pushed out, spread, corroded, or contaminated terminals. The following additional checks may assist you in identifying a possible intermittent problem. Reconnect any disconnected components and harness connector. **WARNING: TO AVOID PERSONAL INJURY OR DEATH, TURN THE IGNITION ON, THEN RECONNECT THE BATTERY.** With the DRBIII® monitor active codes as you work through the following steps. **WARNING: TO AVOID PERSONAL INJURY OR DEATH, MAINTAIN A SAFE DISTANCE FROM ALL AIRBAGS WHILE PERFORMING THE FOLLOWING STEPS.** Wiggle the wiring harness and connectors of the related airbag circuit or component. If codes are related to the Driver Airbag circuits, rotate the steering wheel from stop to stop. IF only stored codes return continue the test until the problem area has been isolated In the previous steps you have attempted to recreate the conditions responsible for setting active DTC in question. Are any ACTIVE DTCs present? Yes → Select appropriate symptom from Symptom List. No → No problem found at this time. Erase all codes before returning vehicle to customer.	All

Symptom:
DRIVER SEAT BELT SWITCH SHORT TOGETHER

When Monitored and Set Condition:

DRIVER SEAT BELT SWITCH SHORT TOGETHER

When Monitored: With the ignition on the ACM monitors the Seat Belt Buckle Switch circuit for a shorted together.

Set Condition: The code will set if the ACM detects low circuit voltage.

POSSIBLE CAUSES
DRIVER SEAT BELT SWITCH SHORT TO GROUND
DRIVER SEAT BELT SWITCH CIRCUITS SHORT TO GROUND
ACM, DRIVER SEAT BELT SWITCH SHORT TO GROUND
STORED CODE OR INTERMITTENT CONDITION
ACTIVE CODE PRESENT

TEST	ACTION	APPLICABILITY
1	Turn the ignition on. **NOTE: Ensure the battery is fully charged.** **NOTE: For the purpose of this test, the AECM and ORC modules will be referred to as an ACM.** SELECT ACTIVE or STORED DTC: ACM - ACTIVE DTC Go To 2 ACM - STORED DTC Go To 5 **NOTE: When reconnecting Airbag system components, the ignition must be turned off and the battery must be disconnected.**	All
2	Turn Ignition off. Disconnect the Driver Seat Belt Switch connector(s). **NOTE: Check connectors - Clean and repair as necessary.** Turn Ignition on. With the DRBIII®, read the active Airbag Control Module DTC's. Does the DRB show DRIVER SEAT BELT CIRCUIT OPEN? Yes → Replace the Driver Seat Belt Switch Buckle Assembly. Perform __AIRBAG VERIFICATION TEST - VER 1. No → Go To 3	All

DRIVER SEAT BELT SWITCH SHORT TOGETHER — Continued

TEST	ACTION	APPLICABILITY
3	Measure the resistance of the Driver SBS Line 1 and Line 2 circuits between the Driver SBS connector and ground. Is the resistance below 10K ohms on either circuit? Yes → Repair the Driver Seat Belt Switch line 1 or line 2 shorted to ground. Perform __AIRBAG VERIFICATION TEST - VER 1. No → Go To 4	All
4	**WARNING: IF THE AIRBAG CONTROL MODULE IS DROPPED AT ANY TIME, IT MUST BE REPLACED. FAILURE TO TAKE THE PROPER PRECAUTIONS COULD RESULT IN ACCIDENTAL AIRBAG DEPLOYMENT AND PERSONAL INJURY OR DEATH.** If there are no possible causes remaining, view repair. Repair: Replace the Airbag Control Module in accordance with the Service information. Perform __AIRBAG VERIFICATION TEST - VER 1.	All
5	With the DRBIII®, record and erase all DTC's from all Airbag modules. If equipped with Passenger Airbag On - Off switch, read the DTC's in all switch positions. If any ACTIVE codes are present they must be resolved before diagnosing any stored codes. **WARNING: TO AVOID PERSONAL INJURY OR DEATH, TURN THE IGNITION OFF, DISCONNECT THE BATTERY AND WAIT TWO MINUTES BEFORE PROCEEDING.** Using the wiring diagram/schematic as a guide, inspect the wiring and connectors. Look for chaffed, pierced, pinched, or partially broken wires and broken, bent, pushed out, spread, corroded, or contaminated terminals. The following additional checks may assist you in identifying a possible intermittent problem. Reconnect any disconnected components and harness connector. **WARNING: TO AVOID PERSONAL INJURY OR DEATH, TURN THE IGNITION ON, THEN RECONNECT THE BATTERY.** With the DRBIII® monitor active codes as you work through the following steps. **WARNING: TO AVOID PERSONAL INJURY OR DEATH, MAINTAIN A SAFE DISTANCE FROM ALL AIRBAGS WHILE PERFORMING THE FOLLOWING STEPS.** Wiggle the wiring harness and connectors of the related airbag circuit or component. If codes are related to the Driver Airbag circuits, rotate the steering wheel from stop to stop. IF only stored codes return continue the test until the problem area has been isolated In the previous steps you have attempted to recreate the conditions responsible for setting active DTC in question. Are any ACTIVE DTCs present? Yes → Select appropriate symptom from Symptom List. No → No problem found at this time. Erase all codes before returning vehicle to customer.	All

Symptom:
DRIVER SEAT BELT TENSIONER CIRCUIT OPEN

When Monitored and Set Condition:

DRIVER SEAT BELT TENSIONER CIRCUIT OPEN

When Monitored: With the ignition on the ACM monitors the resistance of the Driver Seat Belt Tensioner circuits.

Set Condition: The ACM has detected an open circuit or high resistance on the Driver Seat Belt Tensioner circuits.

POSSIBLE CAUSES
DRIVER SEAT BELT TENSIONER CIRCUITS OPEN
DRIVER SEAT BELT TENSIONER LINE 1 OR LINE 2 CIRCUIT OPEN
ACM, DRIVER SEAT BELT TENSIONER CIRCUIT OPEN
STORED CODE OR INTERMITTENT CONDITION
ACTIVE CODE PRESENT

TEST	ACTION	APPLICABILITY
1	Turn the ignition on. **NOTE: Ensure the battery is fully charged.** **NOTE: For the purpose of this test, the AECM and ORC modules will be referred to as an ACM.** SELECT ACTIVE or STORED DTC: ACM - ACTIVE DTC Go To 2 ACM - STORED DTC Go To 5 **NOTE: When reconnecting Airbag system components, the ignition must be turned off and the battery must be disconnected.**	All
2	**NOTE: Ensure the battery is fully charged.** **WARNING: TO AVOID PERSONAL INJURY OR DEATH, TURN IGNITION OFF, DISCONNECT THE BATTERY AND WAIT TWO MINUTES BEFORE PROCEEDING.** Disconnect the Driver Seat Belt Tensioner connector. **NOTE: Check connectors - Clean and repair as necessary.** Connect the appropriate Load Tool to the Driver Seat Belt Tensioner connector. **WARNING: TO AVOID PERSONAL INJURY OR DEATH, TURN IGNITION ON, THEN RECONNECT THE BATTERY.** With the DRBIII®, read active Airbag Control Module DTC's. Does the DRBIII® display DRIVER SBT CIRCUIT OPEN? Yes → Go To 3 No → Replace Driver Seat Belt Tensioner in accordance with the Service Information. Perform __AIRBAG VERIFICATION TEST - VER 1.	All

DRIVER SEAT BELT TENSIONER CIRCUIT OPEN — Continued

TEST	ACTION	APPLICABILITY
3	**WARNING: TO AVOID PERSONAL INJURY OR DEATH, TURN IGNITION OFF, DISCONNECT THE BATTERY AND WAIT TWO MINUTES BEFORE PROCEEDING.** Disconnect the Load Tool from the Driver Seat Belt Tensioner connector. Disconnect the Airbag Control Module Connector(s). **NOTE: Check connectors - Clean and repair as necessary.** Connect the appropriate Load Tool ACM Adaptor to the Airbag Control Module connector(s). Measure the resistance of the Driver SBT Line 1 and Line 2 circuits between the Load Tool Adapter and the Driver SBT connector. Is the resistance below 1.0 ohms on both circuit? Yes → Go To 4 No → Repair open or high resistance in Driver Seat Belt Tensioner Line 1 Line 2 circuits. Perform __AIRBAG VERIFICATION TEST - VER 1.	All
4	**WARNING: TO AVOID PERSONAL INJURY OR DEATH, TURN THE IGNITION OFF, DISCONNECT THE BATTERY AND WAIT TWO MINUTES BEFORE PROCEEDING.** **WARNING: IF THE AIRBAG CONTROL MODULE IS DROPPED AT ANY TIME, IT MUST BE REPLACED. FAILURE TO TAKE THE PROPER PRECAUTIONS COULD RESULT IN ACCIDENTAL AIRBAG DEPLOYMENT, PERSONAL INJURY OR DEATH, .** If there are no possible causes remaining, view repair. Repair: Replace the Airbag Control Module in accordance with the Service information. Perform __AIRBAG VERIFICATION TEST - VER 1.	All

DRIVER SEAT BELT TENSIONER CIRCUIT OPEN — Continued

TEST	ACTION	APPLICABILITY
5	With the DRBIII®, record and erase all DTC's from all Airbag modules. If equipped with Passenger Airbag On - Off switch, read the DTC's in all switch positions. If any ACTIVE codes are present they must be resolved before diagnosing any stored codes. **WARNING: TO AVOID PERSONAL INJURY OR DEATH, TURN THE IGNITION OFF, DISCONNECT THE BATTERY AND WAIT TWO MINUTES BEFORE PROCEEDING.** Using the wiring diagram/schematic as a guide, inspect the wiring and connectors. Look for chaffed, pierced, pinched, or partially broken wires and broken, bent, pushed out, spread, corroded, or contaminated terminals. The following additional checks may assist you in identifying a possible intermittent problem. Reconnect any disconnected components and harness connector. **WARNING: TO AVOID PERSONAL INJURY OR DEATH, TURN THE IGNITION ON, THEN RECONNECT THE BATTERY.** With the DRBIII® monitor active codes as you work through the following steps. **WARNING: TO AVOID PERSONAL INJURY OR DEATH, MAINTAIN A SAFE DISTANCE FROM ALL AIRBAGS WHILE PERFORMING THE FOLLOWING STEPS.** Wiggle the wiring harness and connectors of the related airbag circuit or component. If codes are related to the Driver Airbag circuits, rotate the steering wheel from stop to stop. IF only stored codes return continue the test until the problem area has been isolated In the previous steps you have attempted to recreate the conditions responsible for setting active DTC in question. Are any ACTIVE DTCs present? Yes → Select appropriate symptom from Symptom List. No → No problem found at this time. Erase all codes before returning vehicle to customer.	All

Symptom:
DRIVER SEAT BELT TENSIONER CIRCUIT SHORT

When Monitored and Set Condition:

DRIVER SEAT BELT TENSIONER CIRCUIT SHORT

When Monitored: With the ignition on the ACM monitors the resistance of the Driver Seat Belt Tensioner circuits

Set Condition: The ACM has detected low resistance in the Driver Seat Belt Tensioner circuits.

POSSIBLE CAUSES
DRIVER SEAT BELT TENSIONER SHORT
DRIVER SEAT BELT TENSIONER LINE 1 SHORT TO LINE 2
ACM, DRIVER SEAT BELT TENSIONER CIRCUIT SHORT
STORED CODE OR INTERMITTENT CONDITION
ACTIVE CODE PRESENT

TEST	ACTION	APPLICABILITY
1	Turn the ignition on. **NOTE: Ensure the battery is fully charged.** **NOTE: For the purpose of this test, the AECM and ORC modules will be referred to as an ACM.** SELECT ACTIVE or STORED DTC: ACM - ACTIVE DTC Go To 2 ACM - STORED DTC Go To 5 **NOTE: When reconnecting airbag system components the Ignition must be turned off and the Battery must be disconnected.**	All
2	**WARNING: TO AVOID PERSONAL INJURY OR DEATH, TURN IGNITION OFF, DISCONNECT THE BATTERY AND WAIT TWO MINUTES BEFORE PROCEEDING.** Disconnect the Driver Seat Belt Tensioner connector. **NOTE: Check connectors - Clean and repair as necessary.** Connect the appropriate Load Tool to the Driver Seat Belt Tensioner connector. **WARNING: TO AVOID PERSONAL INJURY OR DEATH, TURN IGNITION ON, THEN RECONNECT THE BATTERY.** With the DRBIII®, read active Airbag Control Module DTC's. Does the DRBIII® display DRIVER SEAT BELT TENSIONER CIRCUIT SHORT? Yes → Go To 3 No → Replace Driver Seat Belt Tensioner in accordance with the Service Information. Perform __AIRBAG VERIFICATION TEST - VER 1.	All

DRIVER SEAT BELT TENSIONER CIRCUIT SHORT — Continued

TEST	ACTION	APPLICABILITY
3	**WARNING: TO AVOID PERSONAL INJURY OR DEATH, TURN IGNITION OFF, DISCONNECT THE BATTERY AND WAIT TWO MINUTES BEFORE PROCEEDING.** Disconnect the Load Tool from the Driver Seat Belt Tensioner connector. Disconnect the Airbag Control Module connector(s). **NOTE: Check connectors - Clean and repair as necessary.** Connect the appropriate Load Tool ACM Adaptor to the Airbag Control Module connector(s). Measure the resistance between the Driver SBT Line 1 and Line 2 circuit at the Driver SBT connector. Is the resistance below 10K Ohms? Yes → Repair Driver Seat Belt Tensioner Line 1 circuit short to Driver Seat Belt Tensioner Line 2 circuit. Perform __AIRBAG VERIFICATION TEST - VER 1. No → Go To 4	All
4	**WARNING: TO AVOID PERSONAL INJURY OR DEATH, TURN THE IGNITION OFF, DISCONNECT THE BATTERY AND WAIT TWO MINUTES BEFORE PROCEEDING.** **WARNING: IF THE AIRBAG CONTROL MODULE IS DROPPED AT ANY TIME, IT MUST BE REPLACED. FAILURE TO TAKE THE PROPER PRECAUTIONS COULD RESULT IN ACCIDENTAL AIRBAG DEPLOYMENT AND PERSONAL INJURY OR DEATH.** If there are no possible causes remaining, view repair. Repair: Replace the Airbag Control Module in accordance with the Service Information. Perform __AIRBAG VERIFICATION TEST - VER 1.	All

DRIVER SEAT BELT TENSIONER CIRCUIT SHORT — Continued

TEST	ACTION	APPLICABILITY
5	With the DRBIII®, record and erase all DTC's from all Airbag modules. If equipped with Passenger Airbag On - Off switch, read the DTC's in all switch positions. If any ACTIVE codes are present they must be resolved before diagnosing any stored codes. **WARNING: TO AVOID PERSONAL INJURY OR DEATH, TURN THE IGNITION OFF, DISCONNECT THE BATTERY AND WAIT TWO MINUTES BEFORE PROCEEDING.** Using the wiring diagram/schematic as a guide, inspect the wiring and connectors. Look for chaffed, pierced, pinched, or partially broken wires and broken, bent, pushed out, spread, corroded, or contaminated terminals. The following additional checks may assist you in identifying a possible intermittent problem. Reconnect any disconnected components and harness connector. **WARNING: TO AVOID PERSONAL INJURY OR DEATH, TURN THE IGNITION ON, THEN RECONNECT THE BATTERY.** With the DRBIII® monitor active codes as you work through the following steps. **WARNING: TO AVOID PERSONAL INJURY OR DEATH, MAINTAIN A SAFE DISTANCE FROM ALL AIRBAGS WHILE PERFORMING THE FOLLOWING STEPS.** Wiggle the wiring harness and connectors of the related airbag circuit or component. If codes are related to the Driver Airbag circuits, rotate the steering wheel from stop to stop. IF only stored codes return continue the test until the problem area has been isolated In the previous steps you have attempted to recreate the conditions responsible for setting active DTC in question. Are any ACTIVE DTCs present? Yes → Select appropriate symptom from Symptom List. No → No problem found at this time. Erase all codes before returning vehicle to customer.	All

Symptom:
DRIVER SEAT BELT TENSIONER SHORT TO BATTERY

When Monitored and Set Condition:

DRIVER SEAT BELT TENSIONER SHORT TO BATTERY

When Monitored: With the ignition on the ACM monitors the voltage of the Driver Seat Belt Tensioner circuits.

Set Condition: The ACM has detected high voltage on the Driver Seat Belt Tensioner circuits.

POSSIBLE CAUSES
DRIVER SEAT BELT TENSIONER SHORT TO BATTERY
DRIVER SBT LINE 1 OR LINE 2 SHORT TO BATTERY
ACM, DRIVER SEAT BELT TENSIONER SHORT TO BATTERY
STORED CODE OR INTERMITTENT CONDITION
ACTIVE CODE PRESENT

TEST	ACTION	APPLICABILITY
1	Turn the ignition on. **NOTE: Ensure the battery is fully charged.** **NOTE: For the purpose of this test, the AECM and ORC modules will be referred to as an ACM.** SELECT ACTIVE or STORED DTC: ACM - ACTIVE DTC Go To 2 ACM - STORED DTC Go To 5 **NOTE: When reconnecting airbag system components the Ignition must be turned off and the Battery must be disconnected.**	All
2	**WARNING: TO AVOID PERSONAL INJURY OR DEATH, TURN IGNITION OFF, DISCONNECT THE BATTERY AND WAIT TWO MINUTES BEFORE PROCEEDING.** Disconnect the Driver Seat Belt Tensioner connector. **NOTE: Check connectors - Clean and repair as necessary.** Connect the appropriate Load Tool to the Driver Seat Belt Tensioner connector. **WARNING: TO AVOID PERSONAL INJURY OR DEATH,TURN IGNITION ON, THEN RECONNECT THE BATTERY.** With the DRBIII®, read the active Airbag Control Module DTC's. Does the DRBIII® display DRIVER SEAT BELT TENSIONER SHORT TO BATTERY? Yes → Go To 3 No → Replace Driver Seat Belt Tensioner in accordance with the Service Information. Perform __AIRBAG VERIFICATION TEST - VER 1.	All

DRIVER SEAT BELT TENSIONER SHORT TO BATTERY — Continued

TEST	ACTION	APPLICABILITY
3	**WARNING: TO AVOID PERSONAL INJURY OR DEATH, TURN IGNITION OFF, DISCONNECT THE BATTERY AND WAIT TWO MINUTES BEFORE PROCEEDING.** Disconnect the Load Tool from the Driver Seat Belt Tensioner connector. Disconnect the Airbag Control Module Connector(s). **NOTE: Check connectors - Clean and repair as necessary.** Connect the appropriate Load Tool ACM Adaptor to the Airbag Control Module connector(s). **WARNING: TO AVOID PERSONAL INJURY OR DEATH, TURN IGNITION ON, THEN RECONNECT THE BATTERY.** Measure the voltage of the Driver SBT Line 1 and Line 2 circuits between the Driver SBT connector and ground. Is there any voltage present? Yes → Repair Driver Seat Belt Tensioner Line 1 or Line 2 circuit short to battery. Perform __AIRBAG VERIFICATION TEST - VER 1. No → Go To 4	All
4	**WARNING: TO AVOID PERSONAL INJURY OR DEATH, TURN THE IGNITION OFF, DISCONNECT THE BATTERY AND WAIT TWO MINUTES BEFORE PROCEEDING.** **WARNING: IF THE AIRBAG CONTROL MODULE IS DROPPED AT ANY TIME, IT MUST BE REPLACED. FAILURE TO TAKE THE PROPER PRECAUTIONS COULD RESULT IN ACCIDENTAL AIRBAG DEPLOYMENT AND PERSONAL INJURY OR DEATH.** If there are no possible causes remaining, view repair. Repair: Replace the Airbag Control Module in accordance with the Service Information. Perform __AIRBAG VERIFICATION TEST - VER 1.	All

DRIVER SEAT BELT TENSIONER SHORT TO BATTERY — Continued

TEST	ACTION	APPLICABILITY
5	With the DRBIII®, record and erase all DTC's from all Airbag modules. If equipped with Passenger Airbag On - Off switch, read the DTC's in all switch positions. If any ACTIVE codes are present they must be resolved before diagnosing any stored codes. **WARNING: TO AVOID PERSONAL INJURY OR DEATH, TURN THE IGNITION OFF, DISCONNECT THE BATTERY AND WAIT TWO MINUTES BEFORE PROCEEDING.** Using the wiring diagram/schematic as a guide, inspect the wiring and connectors. Look for chaffed, pierced, pinched, or partially broken wires and broken, bent, pushed out, spread, corroded, or contaminated terminals. The following additional checks may assist you in identifying a possible intermittent problem. Reconnect any disconnected components and harness connector. **WARNING: TO AVOID PERSONAL INJURY OR DEATH, TURN THE IGNITION ON, THEN RECONNECT THE BATTERY.** With the DRBIII® monitor active codes as you work through the following steps. **WARNING: TO AVOID PERSONAL INJURY OR DEATH, MAINTAIN A SAFE DISTANCE FROM ALL AIRBAGS WHILE PERFORMING THE FOLLOWING STEPS.** Wiggle the wiring harness and connectors of the related airbag circuit or component. If codes are related to the Driver Airbag circuits, rotate the steering wheel from stop to stop. IF only stored codes return continue the test until the problem area has been isolated In the previous steps you have attempted to recreate the conditions responsible for setting active DTC in question. Are any ACTIVE DTCs present? Yes → Select appropriate symptom from Symptom List. No → No problem found at this time. Erase all codes before returning vehicle to customer.	All

Symptom:
DRIVER SEAT BELT TENSIONER SHORT TO GROUND

When Monitored and Set Condition:

DRIVER SEAT BELT TENSIONER SHORT TO GROUND

When Monitored: With the ignition on the ACM monitors the voltage of the Driver Seat Belt Tensioner circuits.

Set Condition: When the ACM detects a short to ground in either Driver Seat Belt Tensioner circuits.

POSSIBLE CAUSES
DRIVER SEAT BELT TENSIONER SHORT TO GROUND
DRIVER SEAT BELT LINE 1 OR LINE 2 SHORT TO GROUND
ACM, DRIVER SEAT BELT TENSIONER SHORT TO GROUND
STORED CODE OR INTERMITTENT CONDITION
ACTIVE CODE PRESENT

TEST	ACTION	APPLICABILITY
1	Turn the ignition on. **NOTE: Ensure the battery is fully charged.** **NOTE: For the purpose of this test, the AECM and ORC modules will be referred to as an ACM.** SELECT ACTIVE or STORED DTC: ACM - ACTIVE DTC Go To 2 ACM - STORED DTC Go To 5 **NOTE: When reconnecting airbag system components the Ignition must be turned off and the Battery must be disconnected.**	All
2	**WARNING: TO AVOID PERSONAL INJURY OR DEATH, TURN IGNITION OFF, DISCONNECT THE BATTERY AND WAIT TWO MINUTES BEFORE PROCEEDING.** Disconnect the Driver Seat Belt Tensioner connector. **NOTE: Check connectors - Clean and repair as necessary.** Connect the appropriate Load Tool to the Driver Seat Belt Tensioner connector. **WARNING: TO AVOID PERSONAL INJURY OR DEATH, TURN IGNITION ON, THEN RECONNECT THE BATTERY.** With the DRBIII®, read the active Airbag Control Module DTC's. Does the DRBIII® display DRIVER SEAT BELT TENSIONER SHORT TO GROUND? Yes → Go To 3 No → Replace the Driver Seat Belt Tensioner in accordance with the Service Information. Perform __AIRBAG VERIFICATION TEST - VER 1.	All

DRIVER SEAT BELT TENSIONER SHORT TO GROUND — Continued

TEST	ACTION	APPLICABILITY
3	**WARNING: TO AVOID PERSONAL INJURY OR DEATH, TURN IGNITION OFF, DISCONNECT THE BATTERY AND WAIT TWO MINUTES BEFORE PROCEEDING.** Disconnect the Load Tool from the Driver Seat Belt Tensioner connector. Disconnect the Airbag Control Module connector(s). **NOTE: Check connectors - Clean and repair as necessary.** Connect the appropriate Load Tool ACM Adaptor to the Airbag Control Module connector(s). Measure the resistance of the Driver SBT Line 1 and Line 2 circuits between the Driver SBT connector and ground. Is the resistance below 10K ohms on either circuit? Yes → Repair Driver Seat Belt Tensioner Line 1 or Line 2 circuits short to ground. Perform __AIRBAG VERIFICATION TEST - VER 1. No → Go To 4	All
4	**WARNING: TO AVOID PERSONAL INJURY OR DEATH, TURN THE IGNITION OFF, DISCONNECT THE BATTERY AND WAIT TWO MINUTES BEFORE PROCEEDING.** **WARNING: IF THE AIRBAG CONTROL MODULE IS DROPPED AT ANY TIME, IT MUST BE REPLACED. FAILURE TO TAKE THE PROPER PRECAUTIONS COULD RESULT IN ACCIDENTAL AIRBAG DEPLOYMENT AND PERSONAL INJURY OR DEATH.** If there are no possible causes remaining, view repair. Repair: Replace the Airbag Control Module in accordance with the Service information. Perform __AIRBAG VERIFICATION TEST - VER 1.	All

DRIVER SEAT BELT TENSIONER SHORT TO GROUND — Continued

TEST	ACTION	APPLICABILITY
5	With the DRBIII®, record and erase all DTC's from all Airbag modules. If equipped with Passenger Airbag On - Off switch, read the DTC's in all switch positions. If any ACTIVE codes are present they must be resolved before diagnosing any stored codes. **WARNING: TO AVOID PERSONAL INJURY OR DEATH, TURN THE IGNITION OFF, DISCONNECT THE BATTERY AND WAIT TWO MINUTES BEFORE PROCEEDING.** Using the wiring diagram/schematic as a guide, inspect the wiring and connectors. Look for chaffed, pierced, pinched, or partially broken wires and broken, bent, pushed out, spread, corroded, or contaminated terminals. The following additional checks may assist you in identifying a possible intermittent problem. Reconnect any disconnected components and harness connector. **WARNING: TO AVOID PERSONAL INJURY OR DEATH, TURN THE IGNITION ON, THEN RECONNECT THE BATTERY.** With the DRBIII® monitor active codes as you work through the following steps. **WARNING: TO AVOID PERSONAL INJURY OR DEATH, MAINTAIN A SAFE DISTANCE FROM ALL AIRBAGS WHILE PERFORMING THE FOLLOWING STEPS.** Wiggle the wiring harness and connectors of the related airbag circuit or component. If codes are related to the Driver Airbag circuits, rotate the steering wheel from stop to stop. IF only stored codes return continue the test until the problem area has been isolated In the previous steps you have attempted to recreate the conditions responsible for setting active DTC in question. Are any ACTIVE DTCs present? Yes → Select appropriate symptom from Symptom List. No → No problem found at this time. Erase all codes before returning vehicle to customer.	All

Symptom:
DRIVER SQUIB 1 CIRCUIT OPEN

When Monitored and Set Condition:

DRIVER SQUIB 1 CIRCUIT OPEN

When Monitored: With the ignition on, the ACM monitors the resistance of the Driver Squib 1 circuits.

Set Condition: The ACM detects an open circuit or high resistance in the Driver Squib 1 circuits.

POSSIBLE CAUSES
DRIVER AIRBAG SQUIB 1 CIRCUIT OPEN
CLOCKSPRING SQUIB 1 CIRCUIT OPEN
DRIVER SQUIB 1 LINE 1 OR LINE 2 CIRCUITS OPEN
ACM, DRIVER SQUIB 1 CIRCUIT OPEN
STORED CODE OR INTERMITTENT CONDITION
ACTIVE CODE PRESENT

TEST	ACTION	APPLICABILITY
1	Turn the ignition on. **NOTE: Ensure the battery is fully charged.** **NOTE: For the purpose of this test, the AECM and ORC modules will be referred to as an ACM.** SELECT ACTIVE or STORED DTC: ACM - ACTIVE DTC Go To 2 ACM - STORED DTC Go To 6 **NOTE: When reconnecting Airbag system components, the ignition must be turned off and the battery must be disconnected.**	All

DRIVER SQUIB 1 CIRCUIT OPEN — Continued

TEST	ACTION	APPLICABILITY
2	**WARNING: TO AVOID PERSONAL INJURY OR DEATH, TURN THE IGNITION OFF, DISCONNECT THE BATTERY AND WAIT TWO MINUTES BEFORE PROCEEDING.** Disconnect the Driver Airbag Squib connector(s). **NOTE: Check connectors - Clean and repair as necessary.** **WARNING: DO NOT PLACE AN INTACT UNDEPLOYED AIRBAG FACE DOWN ON A HARD SURFACE, THE AIRBAG WILL PROPEL INTO THE AIR IF ACCIDENTALLY DEPLOYED. FAILURE TO TAKE THE PROPER PRECAUTIONS COULD RESULT IN ACCIDENTAL AIRBAG DEPLOYMENT AND PERSONAL INJURY OR DEATH.** Connect the appropriate Load Tool to the Driver Airbag connector(s). **WARNING: TO AVOID PERSONAL INJURY OR DEATH, TURN THE IGNITION ON, THEN RECONNECT THE BATTERY.** With the DRBIII®, read the active Airbag Control Module DTC's. Does the DRBIII® show DRIVER SQUIB 1 CIRCUIT OPEN? Yes → Go To 3 No → Replace the Driver Airbag in accordance with the Service Information. Perform __AIRBAG VERIFICATION TEST - VER 1.	All
3	**WARNING: TO AVOID PERSONAL INJURY OR DEATH, TURN THE IGNITION OFF, DISCONNECT THE BATTERY AND WAIT TWO MINUTES BEFORE PROCEEDING.** Disconnect the Load Tool from the Driver Airbag connector(s). Disconnect the Clockspring connector(s). **NOTE: Check connectors - Clean and repair as necessary.** Connect the appropriate Load Tool to the Clockspring connector(s). **WARNING: TO AVOID PERSONAL INJURY OR DEATH, TURN THE IGNITION ON, THEN RECONNECT THE BATTERY.** With the DRBIII®, read the active Airbag Control Module DTC's. Does the DRBIII® show DRIVER SQUIB 1 CIRCUIT OPEN? Yes → Go To 4 No → Replace the Clockspring in accordance with the Service Information. Perform __AIRBAG VERIFICATION TEST - VER 1.	All
4	**WARNING: TO AVOID PERSONAL INJURY OR DEATH, TURN THE IGNITION OFF, DISCONNECT THE BATTERY AND WAIT TWO MINUTES BEFORE PROCEEDING.** Disconnect the Load Tool from the Clockspring connector(s). Disconnect the Airbag Control Module connector(s). **NOTE: Check connectors - Clean and repair as necessary.** Connect the appropriate Load Tool Adaptor to the Airbag Control Module connector(s). Measure the resistance of the Driver Squib 1 Line 1 and Line 2 circuits between the ACM Adaptor and the Clockspring connector(s). Is the resistance below 1.0 ohm on both circuits? Yes → Go To 5 No → Repair open or high resistance in the Driver Squib 1 Line 1 or Line 2 circuits. Perform __AIRBAG VERIFICATION TEST - VER 1.	All

DRIVER SQUIB 1 CIRCUIT OPEN — Continued

TEST	ACTION	APPLICABILITY
5	**WARNING: TO AVOID PERSONAL INJURY OR DEATH, TURN THE IGNITION OFF, DISCONNECT THE BATTERY AND WAIT TWO MINUTES BEFORE PROCEEDING.** **WARNING: IF THE AIRBAG CONTROL MODULE IS DROPPED AT ANY TIME, IT MUST BE REPLACED. FAILURE TO TAKE THE PROPER PRECAUTIONS COULD RESULT IN ACCIDENTAL AIRBAG DEPLOYMENT AND PERSONAL INJURY OR DEATH.** If there are no possible causes remaining, view repair. Repair: Replace the Airbag Control Module in accordance with Service Information. Perform __AIRBAG VERIFICATION TEST - VER 1.	All
6	With the DRBIII®, record and erase all DTC's from all Airbag modules. If equipped with Passenger Airbag On - Off switch, read the DTC's in all switch positions. If any ACTIVE codes are present they must be resolved before diagnosing any stored codes. **WARNING: TO AVOID PERSONAL INJURY OR DEATH, TURN THE IGNITION OFF, DISCONNECT THE BATTERY AND WAIT TWO MINUTES BEFORE PROCEEDING.** Using the wiring diagram/schematic as a guide, inspect the wiring and connectors. Look for chaffed, pierced, pinched, or partially broken wires and broken, bent, pushed out, spread, corroded, or contaminated terminals. The following additional checks may assist you in identifying a possible intermittent problem. Reconnect any disconnected components and harness connector. **WARNING: TO AVOID PERSONAL INJURY OR DEATH, TURN THE IGNITION ON, THEN RECONNECT THE BATTERY.** With the DRBIII® monitor active codes as you work through the following steps. **WARNING: TO AVOID PERSONAL INJURY OR DEATH, MAINTAIN A SAFE DISTANCE FROM ALL AIRBAGS WHILE PERFORMING THE FOLLOWING STEPS.** Wiggle the wiring harness and connectors of the related airbag circuit or component. If codes are related to the Driver Airbag circuits, rotate the steering wheel from stop to stop. IF only stored codes return continue the test until the problem area has been isolated In the previous steps you have attempted to recreate the conditions responsible for setting active DTC in question. Are any ACTIVE DTCs present? Yes → Select appropriate symptom from Symptom List. No → No problem found at this time. Erase all codes before returning vehicle to customer.	All

Symptom:
DRIVER SQUIB 1 CIRCUIT SHORT

When Monitored and Set Condition:

DRIVER SQUIB 1 CIRCUIT SHORT

When Monitored: With the ignition on, the ACM monitors the resistance of the Driver Squib 1 circuits.

Set Condition: The ACM has detected low resistance on the Driver Squib 1 circuits.

POSSIBLE CAUSES
DRIVER AIRBAG SQUIB 1 CIRCUIT SHORT
CLOCKSPRING, DRIVER SQUIB 1 CIRCUITS SHORT
DRIVER AIRBAG SQUIB 1 LINE 1 SHORT TO LINE 2
ACM, DRIVER SQUIB LINE 1 SHORT TO LINE 2
STORED CODE OR INTERMITTENT CONDITION
ACTIVE CODE PRESENT

TEST	ACTION	APPLICABILITY
1	Turn the ignition on. **NOTE: Ensure the battery is fully charged.** **NOTE: For the purpose of this test, the AECM and ORC modules will be referred to as an ACM.** SELECT ACTIVE or STORED DTC: ACM - ACTIVE DTC Go To 2 ACM - STORED DTC Go To 6 **NOTE: When reconnecting airbag system components the Ignition must be turned off and the Battery must be disconnected.**	All

DRIVER SQUIB 1 CIRCUIT SHORT — Continued

TEST	ACTION	APPLICABILITY
2	**WARNING: TO AVOID PERSONAL INJURY OR DEATH, TURN THE IGNITION OFF, DISCONNECT THE BATTERY AND WAIT TWO MINUTES BEFORE PROCEEDING.** Disconnect the Driver Airbag connector(s). **NOTE: Check connectors - Clean and repair as necessary.** **WARNING: DO NOT PLACE AN INTACT UNDEPLOYED AIRBAG FACE DOWN ON A HARD SURFACE, THE AIRBAG WILL PROPEL INTO THE AIR IF ACCIDENTALLY DEPLOYED. FAILURE TO TAKE THE PROPER PRECAUTIONS COULD RESULT IN ACCIDENTAL AIRBAG DEPLOYMENT AND PERSONAL INJURY OR DEATH.** Connect the appropriate Load Tool to the Driver Airbag connector(s). **WARNING: TO AVOID PERSONAL INJURY OR DEATH, TURN THE IGNITION ON, THEN RECONNECT THE BATTERY.** With the DRBIII®, read the active Airbag Control Module DTC's. Does the DRBIII® show DRIVER SQUIB 1 CIRCUIT SHORT? Yes → Go To 3 No → Replace the Driver Airbag in accordance with the Service Information. Perform __AIRBAG VERIFICATION TEST - VER 1.	All
3	**WARNING: TO AVOID PERSONAL INJURY OR DEATH, TURN THE IGNITION OFF, DISCONNECT THE BATTERY AND WAIT TWO MINUTES BEFORE PROCEEDING.** Disconnect the Load Tool from the Driver Airbag connector(s). Disconnect the Clockspring connector(s). **NOTE: Check connectors - Clean and repair as necessary.** Connect the appropriate Load Tool to the Clockspring connector(s). **WARNING: TO AVOID PERSONAL INJURY OR DEATH, TURN THE IGNITION ON, THEN RECONNECT THE BATTERY.** With the DRBIII®, read the active Airbag Control Module DTC's. Does the DRBIII® show DRIVER SQUIB 1 CIRCUIT SHORT? Yes → Go To 4 No → Replace the Clockspring in accordance with the Service Information. Perform __AIRBAG VERIFICATION TEST - VER 1.	All
4	**WARNING: TO AVOID PERSONAL INJURY OR DEATH, TURN THE IGNITION OFF, DISCONNECT THE BATTERY AND WAIT TWO MINUTES BEFORE PROCEEDING.** Disconnect the Load Tool from the Clockspring connector(s). Disconnect the Airbag Control Module connector(s). **NOTE: Check connectors - Clean and repair as necessary.** Connect the appropriate Load Tool Adaptor to the Airbag Control Module connector(s). Measure the resistance between the Driver Squib 1 Line 1 and Line 2 at the Clockspring connector. Is the resistance below 10K ohms? Yes → Repair the Driver Squib 1 Line 1 circuit shorted to Driver Squib 1 Line 2 circuit. Perform __AIRBAG VERIFICATION TEST - VER 1. No → Go To 5	All

DRIVER SQUIB 1 CIRCUIT SHORT — Continued

TEST	ACTION	APPLICABILITY
5	**WARNING: TO AVOID PERSONAL INJURY OR DEATH, TURN THE IGNITION OFF, DISCONNECT THE BATTERY AND WAIT TWO MINUTES BEFORE PROCEEDING.** **WARNING: IF THE AIRBAG CONTROL MODULE IS DROPPED AT ANY TIME, IT MUST BE REPLACED. FAILURE TO TAKE THE PROPER PRECAUTIONS COULD RESULT IN ACCIDENTAL AIRBAG DEPLOYMENT AND PERSONAL INJURY OR DEATH.** If there are no possible causes remaining, view repair. Repair: Replace the Airbag Control Module in accordance with Service Information. Perform __AIRBAG VERIFICATION TEST - VER 1.	All
6	With the DRBIII®, record and erase all DTC's from all Airbag modules. If equipped with Passenger Airbag On - Off switch, read the DTC's in all switch positions. If any ACTIVE codes are present they must be resolved before diagnosing any stored codes. **WARNING: TO AVOID PERSONAL INJURY OR DEATH, TURN THE IGNITION OFF, DISCONNECT THE BATTERY AND WAIT TWO MINUTES BEFORE PROCEEDING.** Using the wiring diagram/schematic as a guide, inspect the wiring and connectors. Look for chaffed, pierced, pinched, or partially broken wires and broken, bent, pushed out, spread, corroded, or contaminated terminals. The following additional checks may assist you in identifying a possible intermittent problem. Reconnect any disconnected components and harness connector. **WARNING: TO AVOID PERSONAL INJURY OR DEATH, TURN THE IGNITION ON, THEN RECONNECT THE BATTERY.** With the DRBIII® monitor active codes as you work through the following steps. **WARNING: TO AVOID PERSONAL INJURY OR DEATH, MAINTAIN A SAFE DISTANCE FROM ALL AIRBAGS WHILE PERFORMING THE FOLLOWING STEPS.** Wiggle the wiring harness and connectors of the related airbag circuit or component. If codes are related to the Driver Airbag circuits, rotate the steering wheel from stop to stop. IF only stored codes return continue the test until the problem area has been isolated In the previous steps you have attempted to recreate the conditions responsible for setting active DTC in question. Are any ACTIVE DTCs present? Yes → Select appropriate symptom from Symptom List. No → No problem found at this time. Erase all codes before returning vehicle to customer.	All

Symptom:
DRIVER SQUIB 1 SHORT TO BATTERY

When Monitored and Set Condition:

DRIVER SQUIB 1 SHORT TO BATTERY

When Monitored: With the ignition on, the ACM monitors the voltage of the Driver Squib 1 circuits.

Set Condition: The ACM has detected high voltage on the Driver Squib 1 circuits.

POSSIBLE CAUSES
DRIVER AIRBAG SQUIB 1 SHORT TO BATTERY
CLOCKSPRING, DRIVER SQUIB 1 SHORT TO BATTERY
DRIVER SQUIB 1 LINE 1 OR LINE 2 SHORT TO BATTERY
ACM, DRIVER SQUIB 1 SHORT TO BATTERY
STORED CODE OR INTERMITTENT CONDITION
ACTIVE CODE PRESENT

TEST	ACTION	APPLICABILITY
1	Turn the ignition on. **NOTE: Ensure the battery is fully charged.** **NOTE: For the purpose of this test, the AECM and ORC modules will be referred to as an ACM.** SELECT ACTIVE or STORED ACM DTC: ACM - ACTIVE DTC Go To 2 ACM - STORED DTC Go To 5 **NOTE: When reconnecting Airbag system components, the ignition must be turned off and the battery must be disconnected.**	All

DRIVER SQUIB 1 SHORT TO BATTERY — Continued

TEST	ACTION	APPLICABILITY
2	**WARNING: TO AVOID PERSONAL INJURY OR DEATH, TURN THE IGNITION OFF, DISCONNECT THE BATTERY AND WAIT TWO MINUTES BEFORE PROCEEDING.** Disconnect the Driver Airbag Squib connector(s). **WARNING: DO NOT PLACE AN INTACT UNDEPLOYED AIRBAG FACE DOWN ON A HARD SURFACE, THE AIRBAG WILL PROPEL INTO THE AIR IF ACCIDENTALLY DEPLOYED. FAILURE TO TAKE THE PROPER PRECAUTIONS COULD RESULT IN ACCIDENTAL AIRBAG DEPLOYMENT AND PERSONAL INJURY OR DEATH.** **NOTE: Check connectors - Clean and repair as necessary.** Connect the appropriate Load Tool to the Driver Airbag connector(s). **WARNING: TO AVOID PERSONAL INJURY OR DEATH, TURN THE IGNITION ON, THEN RECONNECT THE BATTERY.** With the DRBIII®, read the active Airbag Control Module DTC's. Does the DRBIII® show DRIVER SQUIB 1 SHORT TO BATTERY? Yes → Go To 3 No → Replace the Driver Airbag in accordance with the Service Information. Perform __AIRBAG VERIFICATION TEST - VER 1.	All
3	**WARNING: TO AVOID PERSONAL INJURY OR DEATH, TURN THE IGNITION OFF, DISCONNECT THE BATTERY AND WAIT TWO MINUTES BEFORE PROCEEDING.** Disconnect the Load Tool from the Driver Airbag connector(s). Disconnect the Clockspring connector(s). **NOTE: Check connectors - Clean and repair as necessary.** Connect the appropriate Load Tool to the Clockspring connector(s). **WARNING: TO AVOID PERSONAL INJURY OR DEATH, TURN THE IGNITION ON, THEN RECONNECT THE BATTERY.** With the DRBIII®, read the active Airbag Control Module DTC's. Does the DRBIII® show DRIVER SQUIB 1 SHORT TO BATTERY ? Yes → Go To 4 No → Replace the Clockspring in accordance with the Service Information. Perform __AIRBAG VERIFICATION TEST - VER 1.	All

DRIVER SQUIB 1 SHORT TO BATTERY — Continued

TEST	ACTION	APPLICABILITY
4	**WARNING: TO AVOID PERSONAL INJURY OR DEATH, TURN THE IGNITION OFF, DISCONNECT THE BATTERY AND WAIT TWO MINUTES BEFORE PROCEEDING.** **WARNING: IF THE AIRBAG CONTROL MODULE IS DROPPED AT ANY TIME, IT MUST BE REPLACED. FAILURE TO TAKE THE PROPER PRECAUTIONS COULD RESULT IN ACCIDENTAL AIRBAG DEPLOYMENT AND PERSONAL INJURY OR DEATH.** Disconnect the Load Tool from the Clockspring connector(s). Disconnect the Airbag Control Module connector(s). **NOTE: Check connectors - Clean and repair as necessary.** Connect the appropriate Load Tool Adaptor to the Airbag Control Module connector(s). **WARNING: TO AVOID PERSONAL INJURY OR DEATH, TURN THE IGNITION ON, THEN RECONNECT THE BATTERY.** Measure the voltage on the Driver Squib 1 Line 1 and Line 2 circuits between the Clockspring connector and ground. Is there any voltage present? Yes → Repair the Driver Squib 1 Line 1 or Line 2 circuits shorted to battery. Perform __AIRBAG VERIFICATION TEST - VER 1. No → Replace the Airbag Control Module in accordance with Service Information. Perform __AIRBAG VERIFICATION TEST - VER 1.	All
5	With the DRBIII®, record and erase all DTC's from all Airbag modules. If equipped with Passenger Airbag On - Off switch, read the DTC's in all switch positions. If any ACTIVE codes are present they must be resolved before diagnosing any stored codes. **WARNING: TO AVOID PERSONAL INJURY OR DEATH, TURN THE IGNITION OFF, DISCONNECT THE BATTERY AND WAIT TWO MINUTES BEFORE PROCEEDING.** Using the wiring diagram/schematic as a guide, inspect the wiring and connectors. Look for chaffed, pierced, pinched, or partially broken wires and broken, bent, pushed out, spread, corroded, or contaminated terminals. The following additional checks may assist you in identifying a possible intermittent problem. Reconnect any disconnected components and harness connector. **WARNING: TO AVOID PERSONAL INJURY OR DEATH, TURN THE IGNITION ON, THEN RECONNECT THE BATTERY.** With the DRBIII® monitor active codes as you work through the following steps. **WARNING: TO AVOID PERSONAL INJURY OR DEATH, MAINTAIN A SAFE DISTANCE FROM ALL AIRBAGS WHILE PERFORMING THE FOLLOWING STEPS.** Wiggle the wiring harness and connectors of the related airbag circuit or component. If codes are related to the Driver Airbag circuits, rotate the steering wheel from stop to stop. IF only stored codes return continue the test until the problem area has been isolated In the previous steps you have attempted to recreate the conditions responsible for setting active DTC in question. Are any ACTIVE DTCs present? Yes → Select appropriate symptom from Symptom List. No → No problem found at this time. Erase all codes before returning vehicle to customer.	All

Symptom:
DRIVER SQUIB 1 SHORT TO GROUND

When Monitored and Set Condition:

DRIVER SQUIB 1 SHORT TO GROUND

When Monitored: With the ignition on, the ACM monitors the resistance of the Driver Squib 1 circuits.

Set Condition: When the ACM detects a short to ground in either Driver Squib 1 circuits.

POSSIBLE CAUSES
DRIVER AIRBAG SQUIB 1 SHORT TO GROUND
CLOCKSPRING, DRIVER SQUIB 1 SHORT TO GROUND
DRIVER SQUIB 1 LINE 1 OR LINE 2 SHORTED TO GROUND
ACM, DRIVER SQUIB 1 SHORT TO GROUND
STORED CODE OR INTERMITTENT CONDITION
ACTIVE CODE PRESENT

TEST	ACTION	APPLICABILITY
1	Turn the ignition on. **NOTE: Ensure the battery is fully charged.** **NOTE: For the purpose of this test, the AECM and ORC modules will be referred to as an ACM.** SELECT ACTIVE or STORED DTC: ACM - ACTIVE DTC Go To 2 ACM - STORED DTC Go To 6 **NOTE: When reconnecting Airbag system components, the ignition must be turned off and the battery must be disconnected.**	All

DRIVER SQUIB 1 SHORT TO GROUND — Continued

TEST	ACTION	APPLICABILITY
2	**WARNING: TO AVOID PERSONAL INJURY OR DEATH, TURN THE IGNITION OFF, DISCONNECT THE BATTERY AND WAIT TWO MINUTES BEFORE PROCEEDING.** Disconnect the Driver Airbag Squib connector(s). **NOTE: Check connectors - Clean and repair as necessary.** **WARNING: DO NOT PLACE AN INTACT UNDEPLOYED AIRBAG FACE DOWN ON A HARD SURFACE, THE AIRBAG WILL PROPEL INTO THE AIR IF ACCIDENTALLY DEPLOYED. FAILURE TO TAKE THE PROPER PRECAUTIONS COULD RESULT IN ACCIDENTAL AIRBAG DEPLOYMENT AND PERSONAL INJURY OR DEATH.** Connect the appropriate Load Tool to the Driver Airbag connector(s). **WARNING: TO AVOID PERSONAL INJURY OR DEATH, TURN THE IGNITION ON, THEN RECONNECT THE BATTERY.** With the DRBIII®, read the active Airbag Control Module DTC's. Does the DRBIII® show DRIVER SQUIB 1 SHORT TO GROUND? Yes → Go To 3 No → Replace the Driver Airbag in accordance with the Service Information. Perform __AIRBAG VERIFICATION TEST - VER 1.	All
3	**WARNING: TO AVOID PERSONAL INJURY OR DEATH, TURN THE IGNITION OFF, DISCONNECT THE BATTERY AND WAIT TWO MINUTES BEFORE PROCEEDING.** Disconnect the Load Tool from the Driver Airbag connector(s). Disconnect the Clockspring connector. **NOTE: Check connectors - Clean and repair as necessary.** Connect the appropriate Load Tool to the Clockspring connector. **WARNING: TO AVOID PERSONAL INJURY OR DEATH, TURN THE IGNITION ON, THEN RECONNECT THE BATTERY.** With the DRBIII®, read the active Airbag Control Module DTC's. Does the DRBIII® show DRIVER SQUIB 1 SHORT TO GROUND? Yes → Go To 4 No → Replace the Clockspring in accordance with the Service Information. Perform __AIRBAG VERIFICATION TEST - VER 1.	All
4	**WARNING: TO AVOID PERSONAL INJURY OR DEATH, TURN THE IGNITION OFF, DISCONNECT THE BATTERY AND WAIT TWO MINUTES BEFORE PROCEEDING.** Disconnect the Load Tool from the Clockspring connector. Disconnect the Airbag Control Module connector(s). **NOTE: Check connectors - Clean and repair as necessary.** Connect the appropriate Load Tool Adaptor to the Airbag Control Module connector. Measure the resistance of the Driver Squib 1 Line 1 and Line 2 circuits between Clockspring connector and ground. Is the resistance below 10K ohms on either circuit? Yes → Repair Driver Squib 1 Line 1 or Line 2 circuits shorted to ground. Perform __AIRBAG VERIFICATION TEST - VER 1. No → Go To 5	All

DRIVER SQUIB 1 SHORT TO GROUND — Continued

TEST	ACTION	APPLICABILITY
5	**WARNING: TO AVOID PERSONAL INJURY OR DEATH, TURN THE IGNITION OFF, DISCONNECT THE BATTERY AND WAIT TWO MINUTES BEFORE PROCEEDING.** **WARNING: IF THE AIRBAG CONTROL MODULE IS DROPPED AT ANY TIME, IT MUST BE REPLACED. FAILURE TO TAKE THE PROPER PRECAUTIONS COULD RESULT IN ACCIDENTAL AIRBAG DEPLOYMENT, PERSONAL INJURY OR DEATH, .** If there are no possible causes remaining, view repair. Repair: Replace the Airbag Control Module in accordance with Service Information. Perform __AIRBAG VERIFICATION TEST - VER 1.	All
6	With the DRBIII®, record and erase all DTC's from all Airbag modules. If equipped with Passenger Airbag On - Off switch, read the DTC's in all switch positions. If any ACTIVE codes are present they must be resolved before diagnosing any stored codes. **WARNING: TO AVOID PERSONAL INJURY OR DEATH, TURN THE IGNITION OFF, DISCONNECT THE BATTERY AND WAIT TWO MINUTES BEFORE PROCEEDING.** Using the wiring diagram/schematic as a guide, inspect the wiring and connectors. Look for chaffed, pierced, pinched, or partially broken wires and broken, bent, pushed out, spread, corroded, or contaminated terminals. The following additional checks may assist you in identifying a possible intermittent problem. Reconnect any disconnected components and harness connector. **WARNING: TO AVOID PERSONAL INJURY OR DEATH, TURN THE IGNITION ON, THEN RECONNECT THE BATTERY.** With the DRBIII® monitor active codes as you work through the following steps. **WARNING: TO AVOID PERSONAL INJURY OR DEATH, MAINTAIN A SAFE DISTANCE FROM ALL AIRBAGS WHILE PERFORMING THE FOLLOWING STEPS.** Wiggle the wiring harness and connectors of the related airbag circuit or component. If codes are related to the Driver Airbag circuits, rotate the steering wheel from stop to stop. IF only stored codes return continue the test until the problem area has been isolated In the previous steps you have attempted to recreate the conditions responsible for setting active DTC in question. Are any ACTIVE DTCs present? Yes → Select appropriate symptom from Symptom List. No → No problem found at this time. Erase all codes before returning vehicle to customer.	All

Symptom:
DRIVER SQUIB 2 CIRCUIT OPEN

When Monitored and Set Condition:

DRIVER SQUIB 2 CIRCUIT OPEN

When Monitored: With the ignition on, the ACM monitors the resistance of the Driver Squib 2 circuits.

Set Condition: The ACM detects an open circuit or high resistance in the Driver Squib 2 circuits.

POSSIBLE CAUSES
DRIVER AIRBAG SQUIB 2 CIRCUIT OPEN
CLOCKSPRING, DRIVER SQUIB 2 CIRCUIT OPEN
DRIVER SQUIB 2 LINE 1 OR LINE 2 CIRCUITS OPEN
ACM, DRIVER SQUIB 2 CIRCUIT OPEN
STORED CODE OR INTERMITTENT CONDITION
ACTIVE CODE PRESENT

TEST	ACTION	APPLICABILITY
1	Turn the ignition on. **NOTE: Ensure the battery is fully charged.** **NOTE: For the purpose of this test, the AECM and ORC modules will be referred to as an ACM.** SELECT ACTIVE or STORED DTC: ACM - ACTIVE DTC Go To 2 ACM - STORED DTC Go To 6 **NOTE: When reconnecting Airbag system components, the ignition must be turned off and the battery must be disconnected.**	All

DRIVER SQUIB 2 CIRCUIT OPEN — Continued

TEST	ACTION	APPLICABILITY
2	**WARNING: TO AVOID PERSONAL INJURY OR DEATH, TURN THE IGNITION OFF, DISCONNECT THE BATTERY AND WAIT TWO MINUTES BEFORE PROCEEDING.** Disconnect the Driver Airbag Squib connector(s). **NOTE: Check connectors - Clean and repair as necessary.** **WARNING: DO NOT PLACE AN INTACT UNDEPLOYED AIRBAG FACE DOWN ON A HARD SURFACE, THE AIRBAG WILL PROPEL INTO THE AIR IF ACCIDENTALLY DEPLOYED, AND COULD RESULT IN SERIOUS OR FATAL INJURY.** Connect the appropriate Load Tool to the Driver Airbag connector(s). **WARNING: TO AVOID PERSONAL INJURY OR DEATH, TURN THE IGNITION ON, THEN RECONNECT THE BATTERY.** With the DRBIII®, read the active Airbag Control Module DTC's. Does the DRBIII® show DRIVER SQUIB 2 CIRCUIT OPEN? Yes → Go To 3 No → Replace the Driver Airbag in accordance with the Service Information. Perform __AIRBAG VERIFICATION TEST - VER 1.	All
3	**WARNING: TO AVOID PERSONAL INJURY OR DEATH, TURN THE IGNITION OFF, DISCONNECT THE BATTERY AND WAIT TWO MINUTES BEFORE PROCEEDING.** Disconnect the Load Tool from the Clockspring connector. Disconnect the Clockspring connector. **NOTE: Check connectors - Clean and repair as necessary.** Connect the appropriate Load Tool to the Clockspring connector. **WARNING: TO AVOID PERSONAL INJURY OR DEATH, TURN THE IGNITION ON, THEN RECONNECT THE BATTERY.** With the DRBIII®, read the active Airbag Control Module DTC's. Does the DRBIII® show DRIVER SQUIB 2 CIRCUIT OPEN? Yes → Go To 4 No → Replace the Clockspring in accordance with the Service Information. Perform __AIRBAG VERIFICATION TEST - VER 1.	All
4	**WARNING: TO AVOID PERSONAL INJURY OR DEATH, TURN THE IGNITION OFF, DISCONNECT THE BATTERY AND WAIT TWO MINUTES BEFORE PROCEEDING.** Disconnect the Load Tool from the Clockspring connector(s). Disconnect the Airbag Control Module connector(s). **NOTE: Check connectors - Clean and repair as necessary.** Connect the appropriate Load Tool Adaptor to the Airbag Control Module connector(s) Measure the resistance of the Driver Squib 2 Line 1 and Line 2 circuits between the ACM Adaptor and the Clockspring connector. Is the resistance below 1.0 ohm on both circuits? Yes → Go To 5 No → Repair open or high resistance in the Driver Squib 2 Line 1 or Line 2 circuits. Perform __AIRBAG VERIFICATION TEST - VER 1.	All

DRIVER SQUIB 2 CIRCUIT OPEN — Continued

TEST	ACTION	APPLICABILITY
5	**WARNING: TO AVOID PERSONAL INJURY OR DEATH, TURN THE IGNITION OFF, DISCONNECT THE BATTERY AND WAIT TWO MINUTES BEFORE PROCEEDING.** **WARNING: IF THE AIRBAG CONTROL MODULE IS DROPPED AT ANY TIME, IT MUST BE REPLACED. FAILURE TO TAKE THE PROPER PRECAUTIONS COULD RESULT IN ACCIDENTAL AIRBAG DEPLOYMENT AND PERSONAL INJURY OR DEATH.** If there are no possible causes remaining, view repair. Repair: Replace the Airbag Control Module in accordance with the Service Information. Perform __AIRBAG VERIFICATION TEST - VER 1.	All
6	With the DRBIII®, record and erase all DTC's from all Airbag modules. If equipped with Passenger Airbag On - Off switch, read the DTC's in all switch positions. If any ACTIVE codes are present they must be resolved before diagnosing any stored codes. **WARNING: TO AVOID PERSONAL INJURY OR DEATH, TURN THE IGNITION OFF, DISCONNECT THE BATTERY AND WAIT TWO MINUTES BEFORE PROCEEDING.** Using the wiring diagram/schematic as a guide, inspect the wiring and connectors. Look for chaffed, pierced, pinched, or partially broken wires and broken, bent, pushed out, spread, corroded, or contaminated terminals. The following additional checks may assist you in identifying a possible intermittent problem. Reconnect any disconnected components and harness connector. **WARNING: TO AVOID PERSONAL INJURY OR DEATH, TURN THE IGNITION ON, THEN RECONNECT THE BATTERY.** With the DRBIII® monitor active codes as you work through the following steps. **WARNING: TO AVOID PERSONAL INJURY OR DEATH, MAINTAIN A SAFE DISTANCE FROM ALL AIRBAGS WHILE PERFORMING THE FOLLOWING STEPS.** Wiggle the wiring harness and connectors of the related airbag circuit or component. If codes are related to the Driver Airbag circuits, rotate the steering wheel from stop to stop. IF only stored codes return continue the test until the problem area has been isolated In the previous steps you have attempted to recreate the conditions responsible for setting active DTC in question. Are any ACTIVE DTCs present? Yes → Select appropriate symptom from Symptom List. No → No problem found at this time. Erase all codes before returning vehicle to customer.	All

Symptom:
DRIVER SQUIB 2 CIRCUIT SHORT

When Monitored and Set Condition:

DRIVER SQUIB 2 CIRCUIT SHORT

When Monitored: With the ignition on, the ACM monitors the resistance of the Driver Squib 2 circuits.

Set Condition: The ACM detects low resistance on the Driver Squib 2 circuits.

POSSIBLE CAUSES
DRIVER AIRBAG SQUIB 2 CIRCUIT SHORT
CLOCKSPRING, DRIVER SQUIB 2 CIRCUIT SHORT
DRIVER SQUIB 2 LINE 1 SHORT TO LINE 2
ACM, DRIVER SQUIB 2 CIRCUIT SHORT
STORED CODE OR INTERMITTENT CONDITION
ACTIVE CODE PRESENT

TEST	ACTION	APPLICABILITY
1	Turn the ignition on. **NOTE: Ensure the battery is fully charged.** **NOTE: For the purpose of this test, the AECM and ORC modules will be referred to as an ACM.** SELECT ACTIVE or STORED DTC: ACM - ACTIVE DTC Go To 2 ACM - STORED DTC Go To 6 **NOTE: When reconnecting Airbag system components, the ignition must be turned off and the battery must be disconnected.**	All

DRIVER SQUIB 2 CIRCUIT SHORT — Continued

TEST	ACTION	APPLICABILITY
2	**WARNING: TO AVOID PERSONAL INJURY OR DEATH, TURN THE IGNITION OFF, DISCONNECT THE BATTERY AND WAIT TWO MINUTES BEFORE PROCEEDING.** Disconnect the Driver Airbag connector(s). **NOTE: Check connectors - Clean and repair as necessary.** **WARNING: DO NOT PLACE AN INTACT UNDEPLOYED AIRBAG FACE DOWN ON A HARD SURFACE, THE AIRBAG WILL PROPEL INTO THE AIR IF ACCIDENTALLY DEPLOYED. FAILURE TO TAKE THE PROPER PRECAUTIONS COULD RESULT IN ACCIDENTAL AIRBAG DEPLOYMENT AND PERSONAL INJURY OR DEATH.** Connect the appropriate Load Tool to the Driver Airbag connector(s). **WARNING: TO AVOID PERSONAL INJURY OR DEATH, TURN THE IGNITION ON, THEN RECONNECT THE BATTERY.** With the DRBIII®, read the active Airbag Control Module DTC's. Does the DRB show DRIVER SQUIB 2 CIRCUIT SHORT? Yes → Go To 3 No → Replace Driver Airbag in accordance with the Service Information. Perform __AIRBAG VERIFICATION TEST - VER 1.	All
3	**WARNING: TO AVOID PERSONAL INJURY OR DEATH, TURN THE IGNITION OFF, DISCONNECT THE BATTERY AND WAIT TWO MINUTES BEFORE PROCEEDING.** Disconnect the Load Tool from the Driver Airbag connector(s). Disconnect the Clockspring connector(s). **NOTE: Check connectors - Clean and repair as necessary.** Connect the appropriate Load Tool to the Clockspring connector(s). **WARNING: TO AVOID PERSONAL INJURY OR DEATH, TURN THE IGNITION ON, THEN RECONNECT THE BATTERY.** With the DRBIII®, read the active Airbag Control Module DTC's. Does the DRB show DRIVER SQUIB 2 CIRCUIT SHORT? Yes → Go To 4 No → Replace Clockspring in accordance with the Service Information. Perform __AIRBAG VERIFICATION TEST - VER 1.	All
4	**WARNING: TO AVOID PERSONAL INJURY OR DEATH, TURN THE IGNITION OFF, DISCONNECT THE BATTERY AND WAIT TWO MINUTES BEFORE PROCEEDING.** Disconnect the Load Tool from the Clockspring connector(s). Disconnect the Airbag Control Module connector(s). **NOTE: Check connectors - Clean and repair as necessary.** Connect the appropriate Load Tool Adaptor to the Airbag Control Module connector(s). Measure the resistance between the Driver Squib 2 Line 1 and Line 2 circuits at the Clockspring connector. Is the resistance below 10K ohms? Yes → Repair the Driver Squib 2 Line 1 circuit shorted to Driver Squib 2 Line 2 circuit. Perform __AIRBAG VERIFICATION TEST - VER 1. No → Go To 5	All

DRIVER SQUIB 2 CIRCUIT SHORT — Continued

TEST	ACTION	APPLICABILITY
5	**WARNING: TO AVOID PERSONAL INJURY OR DEATH, TURN THE IGNITION OFF, DISCONNECT THE BATTERY AND WAIT TWO MINUTES BEFORE PROCEEDING.** **WARNING: IF THE AIRBAG CONTROL MODULE IS DROPPED AT ANY TIME, IT MUST BE REPLACED. FAILURE TO TAKE THE PROPER PRECAUTIONS COULD RESULT IN ACCIDENTAL AIRBAG DEPLOYMENT AND PERSONAL INJURY OR DEATH.** If there are no possible causes remaining, view repair. Repair: Replace the Airbag Control Module in accordance with Service Information. Perform __AIRBAG VERIFICATION TEST - VER 1.	All
6	With the DRBIII®, record and erase all DTC's from all Airbag modules. If equipped with Passenger Airbag On - Off switch, read the DTC's in all switch positions. If any ACTIVE codes are present they must be resolved before diagnosing any stored codes. **WARNING: TO AVOID PERSONAL INJURY OR DEATH, TURN THE IGNITION OFF, DISCONNECT THE BATTERY AND WAIT TWO MINUTES BEFORE PROCEEDING.** Using the wiring diagram/schematic as a guide, inspect the wiring and connectors. Look for chaffed, pierced, pinched, or partially broken wires and broken, bent, pushed out, spread, corroded, or contaminated terminals. The following additional checks may assist you in identifying a possible intermittent problem. Reconnect any disconnected components and harness connector. **WARNING: TO AVOID PERSONAL INJURY OR DEATH, TURN THE IGNITION ON, THEN RECONNECT THE BATTERY.** With the DRBIII® monitor active codes as you work through the following steps. **WARNING: TO AVOID PERSONAL INJURY OR DEATH, MAINTAIN A SAFE DISTANCE FROM ALL AIRBAGS WHILE PERFORMING THE FOLLOWING STEPS.** Wiggle the wiring harness and connectors of the related airbag circuit or component. If codes are related to the Driver Airbag circuits, rotate the steering wheel from stop to stop. IF only stored codes return continue the test until the problem area has been isolated In the previous steps you have attempted to recreate the conditions responsible for setting active DTC in question. Are any ACTIVE DTCs present? Yes → Select appropriate symptom from Symptom List. No → No problem found at this time. Erase all codes before returning vehicle to customer.	All

Symptom:
DRIVER SQUIB 2 SHORT TO BATTERY

When Monitored and Set Condition:

DRIVER SQUIB 2 SHORT TO BATTERY

When Monitored: With the ignition on, the ACM monitors the voltage of the Driver Squib 2 circuits.

Set Condition: The ACM detects high voltage on the Driver Squib 2 circuits.

POSSIBLE CAUSES
DRIVER AIRBAG SQUIB 2 SHORT TO BATTERY
CLOCKSPRING, DRIVER SQUIB 2 SHORT TO BATTERY
DRIVER SQUIB 2 LINE 1 OR LINE 2 SHORT TO BATTERY
ACM, DRIVER SQUIB 2 SHORT TO BATTERY
STORED CODE OR INTERMITTENT CONDITION
ACTIVE CODE PRESENT

TEST	ACTION	APPLICABILITY
1	Turn the ignition on. **NOTE: Ensure the battery is fully charged.** **NOTE: For the purpose of this test, the AECM and ORC modules will be referred to as an ACM.** SELECT ACTIVE or STORED DTC: ACM - ACTIVE DTC Go To 2 ACM - STORED DTC Go To 6 **NOTE: When reconnecting Airbag system components, the ignition must be turned off and the battery must be disconnected.**	All

DRIVER SQUIB 2 SHORT TO BATTERY — Continued

TEST	ACTION	APPLICABILITY
2	**WARNING: TO AVOID PERSONAL INJURY OR DEATH,TURN THE IGNITION OFF, DISCONNECT THE BATTERY AND WAIT TWO MINUTES BEFORE PROCEEDING.** Disconnect the Driver Airbag connector(s). **WARNING: DO NOT PLACE AN INTACT UNDEPLOYED AIRBAG FACE DOWN ON A HARD SURFACE, THE AIRBAG WILL PROPEL INTO THE AIR IF ACCIDENTALLY DEPLOYED. FAILURE TO TAKE THE PROPER PRECAUTIONS COULD RESULT IN ACCIDENTAL AIRBAG DEPLOYMENT AND PERSONAL INJURY OR DEATH.** **NOTE: Check connectors - Clean and repair as necessary.** Connect the appropriate Load Tool to the Driver Airbag connector(s). **WARNING: TO AVOID PERSONAL INJURY OR DEATH,TURN THE IGNITION ON, THEN RECONNECT THE BATTERY.** With the DRBIII®, read the active Airbag Control Module DTC's. Does the DRBIII® show DRIVER SQUIB 2 SHORT TO BATTERY? Yes → Go To 3 No → Replace the Driver Airbag in accordance with the Service Information. Perform __AIRBAG VERIFICATION TEST - VER 1.	All
3	**WARNING: TO AVOID PERSONAL INJURY OR DEATH, TURN THE IGNITION OFF, DISCONNECT THE BATTERY AND WAIT TWO MINUTES BEFORE PROCEEDING.** Disconnect the Load Tool from the Driver Airbag connector(s). Disconnect the Clockspring connector(s). **NOTE: Check connectors - Clean and repair as necessary.** Connect the appropriate Load Tool to the Clockspring connector(s). **WARNING: TO AVOID PERSONAL INJURY OR DEATH, TURN THE IGNITION ON, THEN RECONNECT THE BATTERY.** With the DRBIII®, read the active Airbag Control Module DTC's. Does the DRB show DRIVER SQUIB 2 SHORT TO BATTERY ? Yes → Go To 4 No → Replace the Clockspring in accordance with the Service Information. Perform __AIRBAG VERIFICATION TEST - VER 1.	All
4	**WARNING: TO AVOID PERSONAL INJURY OR DEATH, TURN THE IGNITION OFF, DISCONNECT THE BATTERY AND WAIT TWO MINUTES BEFORE PROCEEDING.** Disconnect the Load Tool from the Clockspring connector(s). Disconnect the Airbag Control Module connector(s). **NOTE: Check connectors - Clean and repair as necessary.** Connect the appropriate Load Tool Adaptor to the Airbag Control Module connector(s). **WARNING: TO AVOID PERSONAL INJURY OR DEATH, TURN THE IGNITION ON, THEN RECONNECT THE BATTERY.** Measure the voltage on the Driver Squib 2 Line 1 and Line 2 from the Clockspring connector to ground. Is there any voltage present? Yes → Repair the Driver Squib 2 Line 1 or Line 2 circuits shorted to battery. Perform __AIRBAG VERIFICATION TEST - VER 1. No → Go To 5	All

DRIVER SQUIB 2 SHORT TO BATTERY — Continued

TEST	ACTION	APPLICABILITY
5	**WARNING: TO AVOID PERSONAL INJURY OR DEATH, TURN THE IGNITION OFF, DISCONNECT THE BATTERY AND WAIT TWO MINUTES BEFORE PROCEEDING.** **WARNING: IF THE AIRBAG CONTROL MODULE IS DROPPED AT ANY TIME, IT MUST BE REPLACED. FAILURE TO TAKE THE PROPER PRECAUTIONS COULD RESULT IN ACCIDENTAL AIRBAG DEPLOYMENT AND PERSONAL INJURY OR DEATH.** If there are no possible causes remaining, view repair. Repair: Replace the Airbag Control Module in accordance with Service Information. Perform __AIRBAG VERIFICATION TEST - VER 1.	All
6	With the DRBIII®, record and erase all DTC's from all Airbag modules. If equipped with Passenger Airbag On - Off switch, read the DTC's in all switch positions. If any ACTIVE codes are present they must be resolved before diagnosing any stored codes. **WARNING: TO AVOID PERSONAL INJURY OR DEATH, TURN THE IGNITION OFF, DISCONNECT THE BATTERY AND WAIT TWO MINUTES BEFORE PROCEEDING.** Using the wiring diagram/schematic as a guide, inspect the wiring and connectors. Look for chaffed, pierced, pinched, or partially broken wires and broken, bent, pushed out, spread, corroded, or contaminated terminals. The following additional checks may assist you in identifying a possible intermittent problem. Reconnect any disconnected components and harness connector. **WARNING: TO AVOID PERSONAL INJURY OR DEATH, TURN THE IGNITION ON, THEN RECONNECT THE BATTERY.** With the DRBIII® monitor active codes as you work through the following steps. **WARNING: TO AVOID PERSONAL INJURY OR DEATH, MAINTAIN A SAFE DISTANCE FROM ALL AIRBAGS WHILE PERFORMING THE FOLLOWING STEPS.** Wiggle the wiring harness and connectors of the related airbag circuit or component. If codes are related to the Driver Airbag circuits, rotate the steering wheel from stop to stop. IF only stored codes return continue the test until the problem area has been isolated In the previous steps you have attempted to recreate the conditions responsible for setting active DTC in question. Are any ACTIVE DTCs present? Yes → Select appropriate symptom from Symptom List. No → No problem found at this time. Erase all codes before returning vehicle to customer.	All

Symptom:
DRIVER SQUIB 2 SHORT TO GROUND

When Monitored and Set Condition:

DRIVER SQUIB 2 SHORT TO GROUND

When Monitored: With the ignition on, the ACM monitors the resistance of the Driver Squib 2 circuits.

Set Condition: The ACM detects a short to ground in either Driver Squib 2 circuits.

POSSIBLE CAUSES
DRIVER AIRBAG SQUIB 2 SHORT TO GROUND
CLOCKSPRING, DRIVER SQUIB 2 SHORT TO GROUND
DRIVER SQUIB 2 LINE 1 OR LINE 2 SHORT TO GROUND
ACM, DRIVER SQUIB 2 SHORT TO GROUND
STORED CODE OR INTERMITTENT CONDITION
ACTIVE CODE PRESENT

TEST	ACTION	APPLICABILITY
1	Turn the ignition on. **NOTE: Ensure the battery is fully charged.** **NOTE: For the purpose of this test, the AECM and ORC modules will be referred to as an ACM.** SELECT ACTIVE or STORED DTC: ACM - ACTIVE DTC Go To 2 ACM - STORED DTC Go To 6 **NOTE: When reconnecting Airbag system components, the ignition must be turned off and the battery must be disconnected.**	All

DRIVER SQUIB 2 SHORT TO GROUND — Continued

TEST	ACTION	APPLICABILITY
2	**WARNING: TO AVOID PERSONAL INJURY OR DEATH,TURN THE IGNITION OFF, DISCONNECT THE BATTERY AND WAIT TWO MINUTES BEFORE PROCEEDING.** Disconnect the Driver Airbag connector(s). **NOTE: Check connectors - Clean and repair as necessary.** **WARNING: DO NOT PLACE AN INTACT UNDEPLOYED AIRBAG FACE DOWN ON A HARD SURFACE, THE AIRBAG WILL PROPEL INTO THE AIR IF ACCIDENTALLY DEPLOYED. FAILURE TO TAKE THE PROPER PRECAUTIONS COULD RESULT IN ACCIDENTAL AIRBAG DEPLOYMENT AND PERSONAL INJURY OR DEATH.** Connect the appropriate Load Tool to the Driver Airbag connectors(s). **WARNING: TO AVOID PERSONAL INJURY OR DEATH,TURN THE IGNITION ON, THEN RECONNECT THE BATTERY.** With the DRBIII®, read the active Airbag Control Module DTC's. Does the DRB show DRIVER SQUIB 2 SHORT TO GROUND? Yes → Go To 3 No → Replace the Driver Airbag in accordance with the Service Information. Perform __AIRBAG VERIFICATION TEST - VER 1.	All
3	**WARNING: TO AVOID PERSONAL INJURY OR DEATH,TURN THE IGNITION OFF, DISCONNECT THE BATTERY AND WAIT TWO MINUTES BEFORE PROCEEDING.** Disconnect the Load Tool from the Driver Airbag connector(s). Disconnect the Clockspring connector(s). **NOTE: Check connectors - Clean and repair as necessary.** Connect the appropriate Load Tool to the Clockspring connector(s). **WARNING: TO AVOID PERSONAL INJURY OR DEATH,TURN THE IGNITION ON, THEN RECONNECT THE BATTERY.** With the DRBIII®, read the active Airbag Control Module DTC's. Does the DRB show DRIVER SQUIB 2 SHORT TO GROUND? Yes → Go To 4 No → Replace the Clockspring in accordance with the Service Information. Perform __AIRBAG VERIFICATION TEST - VER 1.	All
4	**WARNING: TO AVOID PERSONAL INJURY OR DEATH, TURN THE IGNITION OFF, DISCONNECT THE BATTERY AND WAIT TWO MINUTES BEFORE PROCEEDING.** Disconnect the Load Tool from the Clockspring connector. Disconnect the Airbag Control Module connector. **NOTE: Check connectors - Clean and repair as necessary.** Connect the appropriate Load Tool Adaptor to the Airbag Control Module connector. Measure the resistance of the Driver Squib 2 Line 1 and Line 2 circuits between Clockspring connector and ground. Is the resistance below 10K ohms on either circuit? Yes → Repair Driver Squib 2 Line 1 or Line 2 circuits shorted to ground. Perform __AIRBAG VERIFICATION TEST - VER 1. No → Go To 5	All

DRIVER SQUIB 2 SHORT TO GROUND — Continued

TEST	ACTION	APPLICABILITY
5	**WARNING: TO AVOID PERSONAL INJURY OR DEATH, TURN THE IGNITION OFF, DISCONNECT THE BATTERY AND WAIT TWO MINUTES BEFORE PROCEEDING.** **WARNING: IF THE AIRBAG CONTROL MODULE IS DROPPED AT ANY TIME, IT MUST BE REPLACED. FAILURE TO TAKE THE PROPER PRECAUTIONS COULD RESULT IN ACCIDENTAL AIRBAG DEPLOYMENT AND PERSONAL INJURY OR DEATH.** If there are no possible causes remaining, view repair. Repair: Replace the Airbag Control Module in accordance with Service Information. Perform __AIRBAG VERIFICATION TEST - VER 1.	All
6	With the DRBIII®, record and erase all DTC's from all Airbag modules. If equipped with Passenger Airbag On - Off switch, read the DTC's in all switch positions. If any ACTIVE codes are present they must be resolved before diagnosing any stored codes. **WARNING: TO AVOID PERSONAL INJURY OR DEATH, TURN THE IGNITION OFF, DISCONNECT THE BATTERY AND WAIT TWO MINUTES BEFORE PROCEEDING.** Using the wiring diagram/schematic as a guide, inspect the wiring and connectors. Look for chaffed, pierced, pinched, or partially broken wires and broken, bent, pushed out, spread, corroded, or contaminated terminals. The following additional checks may assist you in identifying a possible intermittent problem. Reconnect any disconnected components and harness connector. **WARNING: TO AVOID PERSONAL INJURY OR DEATH, TURN THE IGNITION ON, THEN RECONNECT THE BATTERY.** With the DRBIII® monitor active codes as you work through the following steps. **WARNING: TO AVOID PERSONAL INJURY OR DEATH, MAINTAIN A SAFE DISTANCE FROM ALL AIRBAGS WHILE PERFORMING THE FOLLOWING STEPS.** Wiggle the wiring harness and connectors of the related airbag circuit or component. If codes are related to the Driver Airbag circuits, rotate the steering wheel from stop to stop. IF only stored codes return continue the test until the problem area has been isolated In the previous steps you have attempted to recreate the conditions responsible for setting active DTC in question. Are any ACTIVE DTCs present? Yes → Select appropriate symptom from Symptom List. No → No problem found at this time. Erase all codes before returning vehicle to customer.	All

Symptom:
INTERROGATE OCM

When Monitored and Set Condition:

INTERROGATE OCM

When Monitored: With ignition on, the ACM monitors the PCI Bus for an OCM status message containing the Occupant Classification information, DTC or classification. The status message is sent to the ACM once each second or upon any change in the active DTCs.

Set Condition: The Code will set, if the ACM receives a OCM DTC active indication in the status message from the OCM. NOTE: This indicates that a diagnostic trouble code is present in the OCM.

POSSIBLE CAUSES
INTERROGATE OCCUPANT CLASSIFICATION MODULE
ACM, NO ACTIVE OCCUPANT CLASSIFICATION MODULE DTCS
STORED CODE OR INTERMITTENT CONDITION
ACTIVE CODE PRESENT

TEST	ACTION	APPLICABILITY
1	**NOTE: Ensure that the battery is fully charged.** Ensure the battery is fully charged. **NOTE: For the purpose of this test, the AECM and ORC modules will be referred to as an ACM.** **NOTE: Repair all active ACM DTCs before continuing with this test.** SELECT ACTIVE or STORED DTC: ACM - ACTIVE DTC Go To 2 ACM - STORED DTC Go To 4 **NOTE: When reconnecting Airbag system components, the ignition must be turned off and the battery must be disconnected.**	All
2	Turn the ignition on. With the DRBIII® read the OCM active DTC's. Did the DRBIII® show any active OCM DTCs? Yes → Refer to symptom list for problems related to Occupant Classification Module (OCM).. Perform __AIRBAG VERIFICATION TEST - VER 1. No → Go To 3	All

INTERROGATE OCM — Continued

TEST	ACTION	APPLICABILITY
3	**WARNING: TO AVOID PERSONAL INJURY OR DEATH, TURN THE IGNITION OFF, DISCONNECT THE BATTERY AND WAIT TWO MINUTES BEFORE PROCEEDING.** **WARNING: IF THE AIRBAG CONTROL MODULE IS DROPPED AT ANY TIME, IT MUST BE REPLACED. FAILURE TO TAKE THE PROPER PRECAUTIONS COULD RESULT IN ACCIDENTAL AIRBAG DEPLOYMENT AND PERSONAL INJURY OR DEATH.** If there are no possible causes remaining, view repair. Repair Replace the Airbag Control Module in accordance with Service Instructions. Perform __AIRBAG VERIFICATION TEST - VER 1.	All
4	With the DRBIII®, record and erase all DTC's from all Airbag modules. If equipped with Passenger Airbag On - Off switch, read the DTC's in all switch positions. If any ACTIVE codes are present they must be resolved before diagnosing any stored codes. **WARNING: TO AVOID PERSONAL INJURY OR DEATH, TURN THE IGNITION OFF, DISCONNECT THE BATTERY AND WAIT TWO MINUTES BEFORE PROCEEDING.** Using the wiring diagram/schematic as a guide, inspect the wiring and connectors. Look for chaffed, pierced, pinched, or partially broken wires and broken, bent, pushed out, spread, corroded, or contaminated terminals. The following additional checks may assist you in identifying a possible intermittent problem. Reconnect any disconnected components and harness connector. **WARNING: TO AVOID PERSONAL INJURY OR DEATH, TURN THE IGNITION ON, THEN RECONNECT THE BATTERY.** With the DRBIII® monitor active codes as you work through the following steps. **WARNING: TO AVOID PERSONAL INJURY OR DEATH, MAINTAIN A SAFE DISTANCE FROM ALL AIRBAGS WHILE PERFORMING THE FOLLOWING STEPS.** Wiggle the wiring harness and connectors of the related airbag circuit or component. If codes are related to the Driver Airbag circuits, rotate the steering wheel from stop to stop. IF only stored codes return continue the test until the problem area has been isolated In the previous steps you have attempted to recreate the conditions responsible for setting active DTC in question. Are any ACTIVE DTCs present? Yes → Select appropriate symptom from Symptom List. No → No problem found at this time. Erase all codes before returning vehicle to customer.	All

Symptom:
LEFT CURTAIN OR SEAT SQUIB CIRCUIT OPEN

When Monitored and Set Condition:

LEFT CURTAIN OR SEAT SQUIB CIRCUIT OPEN

When Monitored: With the ignition on, the ACM monitors the resistance of the Left Curtain or Seat Squib circuits.

Set Condition: When the ACM detects an open circuit or high resistance on the Left Curtain or Seat Squib circuits.

POSSIBLE CAUSES
LEFT CURTAIN OR CURTAIN AIRBAG CIRCUIT OPEN
LEFT CURTAIN OR SEAT SQUIB LINE 1 OR LINE 2 CIRCUIT OPEN
ACM, LEFT CURTAIN OR SEAT SQUIB CIRCUIT OPEN
STORED CODE OR INTERMITTENT CONDITION
ACTIVE CODE PRESENT

TEST	ACTION	APPLICABILITY
1	Turn the ignition on. **NOTE: Ensure that the battery is fully charged.** **NOTE: For the purpose of this test, the AECM and ORC modules will be referred to as an ACM.** SELECT ACTIVE or STORED DTC: ACM - ACTIVE DTC Go To 2 ACM - STORED DTC Go To 5 **NOTE: When reconnecting Airbag system components, the ignition must be turned off and the battery must be disconnected.**	All

LEFT CURTAIN OR SEAT SQUIB CIRCUIT OPEN — Continued

TEST	ACTION	APPLICABILITY
2	**WARNING: TO AVOID PERSONAL INJURY OR DEATH, TURN IGNITION OFF, DISCONNECT THE BATTERY AND WAIT TWO MINUTES BEFORE PROCEEDING.** Disconnect the Left Curtain or Seat Airbag connector. **WARNING: TO AVOID PERSONAL INJURY OR DEATH, DO NOT PLACE AN INTACT UNDEPLOYED CURTAIN AIRBAG FACE DOWN ON A HARD SURFACE, THE AIRBAG WILL PROPEL INTO THE AIR IF ACCIDENTALLY DEPLOYED.** Connect the appropriate Load Tool to the Left Curtain or Seat Airbag connector. **WARNING: TO AVOID PERSONAL INJURY OR DEATH, TURN IGNITION ON, THEN RECONNECT THE BATTERY.** **NOTE: Check connectors - Clean and repair as necessary.** With the DRBIII®, read active Airbag Control Module DTC's. Does the DRBIII® show LEFT CURTAIN OR SEAT SQUIB SEAT CIRCUIT OPEN? Yes → Go To 3 No → Replace Left Curtain or Seat Airbag in accordance with the Service Information. Perform __AIRBAG VERIFICATION TEST - VER 1.	All
3	**WARNING: TO AVOID PERSONAL INJURY OR DEATH, TURN IGNITION OFF, DISCONNECT THE BATTERY AND WAIT TWO MINUTES BEFORE PROCEEDING.** Disconnect the Airbag Load Tool from the Left Curtain or Seat Airbag connector. Disconnect the Airbag Control Module Connector(s). **NOTE: Check connectors - Clean and repair as necessary.** Connect the appropriate Load Tool ACM Adapter to the Airbag Control Module connector(s). Measure the resistance of the Left Curtain or Seat Squib Line 1 and Line 2 circuits between the Load Tool ACM adaptor and the Left Curtain or Seat Airbag connector. Is the resistance below 1.0 ohms on both circuits? Yes → Go To 4 No → Repair open or high resistance in the Left Curtain or Seat Squib Line 1 or Line 2 circuits. Perform __AIRBAG VERIFICATION TEST - VER 1.	All
4	**WARNING: TO AVOID PERSONAL INJURY OR DEATH, TURN THE IGNITION OFF, DISCONNECT THE BATTERY AND WAIT TWO MINUTES BEFORE PROCEEDING.** **WARNING: IF THE AIRBAG CONTROL MODULE IS DROPPED AT ANY TIME, IT MUST BE REPLACED. FAILURE TO TAKE THE PROPER PRECAUTIONS COULD RESULT IN ACCIDENTAL AIRBAG DEPLOYMENT AND PERSONAL INJURY OR DEATH.** If there are no possible causes remaining, view repair. Repair Replace the Airbag Control Module in accordance with the Service information. Perform __AIRBAG VERIFICATION TEST - VER 1.	All

LEFT CURTAIN OR SEAT SQUIB CIRCUIT OPEN — Continued

TEST	ACTION	APPLICABILITY
5	With the DRBIII®, record and erase all DTC's from all Airbag modules. If equipped with Passenger Airbag On - Off switch, read the DTC's in all switch positions. If any ACTIVE codes are present they must be resolved before diagnosing any stored codes. **WARNING: TO AVOID PERSONAL INJURY OR DEATH, TURN THE IGNITION OFF, DISCONNECT THE BATTERY AND WAIT TWO MINUTES BEFORE PROCEEDING.** Using the wiring diagram/schematic as a guide, inspect the wiring and connectors. Look for chaffed, pierced, pinched, or partially broken wires and broken, bent, pushed out, spread, corroded, or contaminated terminals. The following additional checks may assist you in identifying a possible intermittent problem. Reconnect any disconnected components and harness connector. **WARNING: TO AVOID PERSONAL INJURY OR DEATH, TURN THE IGNITION ON, THEN RECONNECT THE BATTERY.** With the DRBIII® monitor active codes as you work through the following steps. **WARNING: TO AVOID PERSONAL INJURY OR DEATH, MAINTAIN A SAFE DISTANCE FROM ALL AIRBAGS WHILE PERFORMING THE FOLLOWING STEPS.** Wiggle the wiring harness and connectors of the related airbag circuit or component. If codes are related to the Driver Airbag circuits, rotate the steering wheel from stop to stop. IF only stored codes return continue the test until the problem area has been isolated In the previous steps you have attempted to recreate the conditions responsible for setting active DTC in question. Are any ACTIVE DTCs present? Yes → Select appropriate symptom from Symptom List. No → No problem found at this time. Erase all codes before returning vehicle to customer.	All

Symptom:
LEFT CURTAIN OR SEAT SQUIB CIRCUIT SHORT

When Monitored and Set Condition:

LEFT CURTAIN OR SEAT SQUIB CIRCUIT SHORT

When Monitored: With the ignition on, the ACM monitors the resistance between the Left Curtain or Seat Squib circuits.

Set Condition: When the ACM detects a low resistance between the Left Curtain or Seat Squib circuits.

POSSIBLE CAUSES
LEFT CURTAIN OR SEAT SQUIB CKT SHORT
LEFT CURTAIN OR SEAT SQUIB LINE 1 SHORTED TO LINE 2
ACM, LEFT CURTAIN OR SEAT SQUIB CIRCUIT SHORT
STORED CODE OR INTERMITTENT CONDITION
ACTIVE CODE PRESENT

TEST	ACTION	APPLICABILITY
1	Turn the ignition on. **NOTE: Ensure that the battery is fully charged.** **NOTE: For the purpose of this test, the AECM and ORC modules will be referred to as an ACM.** SELECT ACTIVE or STORED DTC: ACM - ACTIVE DTC Go To 2 ACM - STORED DTC Go To 5 **NOTE: When reconnecting Airbag system components, the ignition must be turned off and the battery must be disconnected.**	All

LEFT CURTAIN OR SEAT SQUIB CIRCUIT SHORT — Continued

TEST	ACTION	APPLICABILITY
2	**WARNING: TO AVOID PERSONAL INJURY OR DEATH, TURN IGNITION OFF, DISCONNECT THE BATTERY AND WAIT TWO MINUTES BEFORE PROCEEDING.** Disconnect the Left Curtain or Seat Airbag connector. **NOTE: Check connectors - Clean and repair as necessary.** **WARNING: TO AVOID PERSONAL INJURY OR DEATH, DO NOT PLACE AN INTACT UNDEPLOYED CURTAIN AIRBAG FACE DOWN ON A HARD SURFACE, THE AIRBAG WILL PROPEL INTO THE AIR IF ACCIDENTALLY DEPLOYED.** Connect the appropriate Load Tool to the Left Curtain or Seat Airbag connector. **WARNING: TO AVOID PERSONAL INJURY OR DEATH, TURN IGNITION ON, THEN RECONNECT THE BATTERY.** With the DRBIII®, read active Airbag Control Module DTC's. Does the DRBIII® display LEFT CURTAIN OR SEAT SQUIB CIRCUIT SHORT? Yes → Go To 3 No → Replace the Left Curtain or Seat Airbag in accordance with Service Instructions. Perform __AIRBAG VERIFICATION TEST - VER 1.	All
3	**WARNING: TO AVOID PERSONAL INJURY OR DEATH, TURN IGNITION OFF, DISCONNECT THE BATTERY AND WAIT TWO MINUTES BEFORE PROCEEDING.** **WARNING: TO AVOID PERSONAL INJURY OR DEATH, DO NOT PLACE AN INTACT UNDEPLOYED CURTAIN AIRBAG FACE DOWN ON A HARD SURFACE, THE AIRBAG WILL PROPEL INTO THE AIR IF ACCIDENTALLY DEPLOYED.** Disconnect the Load Tool from the Left Curtain or Seat Airbag connector. Disconnect the Airbag Control Module connector(s). **NOTE: Check connectors - Clean and repair as necessary.** Connect the appropriate Load Tool ACM adaptor to the ACM connector(s). Measure the resistance of the Left Curtain or Seat Squib Line 1 and Line 2 circuits at the Left Curtain or Seat Airbag connector. Is the resistance below 10K ohms? Yes → Repair Left Curtain or Seat Squib Line 1 shorted to Line 2. Perform __AIRBAG VERIFICATION TEST - VER 1. No → Go To 4	All
4	**WARNING: TO AVOID PERSONAL INJURY OR DEATH, TURN THE IGNITION OFF, DISCONNECT THE BATTERY AND WAIT TWO MINUTES BEFORE PROCEEDING.** **WARNING: IF THE AIRBAG CONTROL MODULE IS DROPPED AT ANY TIME, IT MUST BE REPLACED. FAILURE TO TAKE THE PROPER PRECAUTIONS COULD RESULT IN ACCIDENTAL AIRBAG DEPLOYMENT AND PERSONAL INJURY OR DEATH.** If there are no possible causes remaining, view repair. Repair Replace the Airbag Control Module in accordance with Service Information. Perform __AIRBAG VERIFICATION TEST - VER 1.	All

LEFT CURTAIN OR SEAT SQUIB CIRCUIT SHORT — Continued

TEST	ACTION	APPLICABILITY
5	With the DRBIII®, record and erase all DTC's from all Airbag modules. If equipped with Passenger Airbag On - Off switch, read the DTC's in all switch positions. If any ACTIVE codes are present they must be resolved before diagnosing any stored codes. **WARNING: TO AVOID PERSONAL INJURY OR DEATH, TURN THE IGNITION OFF, DISCONNECT THE BATTERY AND WAIT TWO MINUTES BEFORE PROCEEDING.** Using the wiring diagram/schematic as a guide, inspect the wiring and connectors. Look for chaffed, pierced, pinched, or partially broken wires and broken, bent, pushed out, spread, corroded, or contaminated terminals. The following additional checks may assist you in identifying a possible intermittent problem. Reconnect any disconnected components and harness connector. **WARNING: TO AVOID PERSONAL INJURY OR DEATH, TURN THE IGNITION ON, THEN RECONNECT THE BATTERY.** With the DRBIII® monitor active codes as you work through the following steps. **WARNING: TO AVOID PERSONAL INJURY OR DEATH, MAINTAIN A SAFE DISTANCE FROM ALL AIRBAGS WHILE PERFORMING THE FOLLOWING STEPS.** Wiggle the wiring harness and connectors of the related airbag circuit or component. If codes are related to the Driver Airbag circuits, rotate the steering wheel from stop to stop. IF only stored codes return continue the test until the problem area has been isolated In the previous steps you have attempted to recreate the conditions responsible for setting active DTC in question. Are any ACTIVE DTCs present? Yes → Select appropriate symptom from Symptom List. No → No problem found at this time. Erase all codes before returning vehicle to customer.	All

Symptom:
LEFT CURTAIN OR SEAT SQUIB SHORT TO BATTERY

When Monitored and Set Condition:

LEFT CURTAIN OR SEAT SQUIB SHORT TO BATTERY

When Monitored: With the ignition on, the ACM monitors the voltage of the Left Curtain or Seat Squib circuits.

Set Condition: When the ACM detects voltage on the Left Curtain or Seat Squib circuits.

POSSIBLE CAUSES
LEFT CURTAIN OR SEAT SQUIB SHORT TO BATTERY
LEFT CURTAIN OR SEAT SQUIB LINE 1 OR LINE 2 SHORT TO BATTERY
ACM, LEFT CURTAIN OR SEAT SQUIB SHORT TO BATTERY
STORED CODE OR INTERMITTENT CONDITION
ACTIVE CODE PRESENT

TEST	ACTION	APPLICABILITY
1	Turn the ignition on. **NOTE: Ensure that the battery is fully charged.** **NOTE: For the purpose of this test, the AECM and ORC modules will be referred to as an ACM.** SELECT ACTIVE or STORED DTC: ACM - ACTIVE DTC Go To 2 ACM - STORED DTC Go To 5 **NOTE: When reconnecting Airbag system components, the ignition must be turned off and the battery must be disconnected.**	All

LEFT CURTAIN OR SEAT SQUIB SHORT TO BATTERY — Continued

TEST	ACTION	APPLICABILITY
2	**WARNING: TO AVOID PERSONAL INJURY OR DEATH, TURN THE IGNITION OFF, DISCONNECT THE BATTERY AND WAIT TWO MINUTES BEFORE PROCEEDING.** Disconnect the Left Curtain or Seat Airbag connector. **NOTE: Check connectors - Clean repair as necessary.** **WARNING: TO AVOID PERSONAL INJURY OR DEATH, DO NOT PLACE AN INTACT UNDEPLOYED CURTAIN AIRBAG FACE DOWN ON A HARD SURFACE, THE AIRBAG WILL PROPEL INTO THE AIR IF ACCIDENTALLY DEPLOYED.** Connect the appropriate Load Tool to the Driver Seat Airbag connector. **WARNING: TO AVOID PERSONAL INJURY OR DEATH, TURN IGNITION ON, THEN RECONNECT THE BATTERY.** With the DRBIII®, read active Airbag Control Module DTC's. Does the DRBIII® show LEFT CURTAIN OR SEAT SQUIB SHORT TO BATTERY? Yes → Go To 3 No → Replace Left Curtain or Seat Airbag in accordance with the Service Information. Perform __AIRBAG VERIFICATION TEST - VER 1.	All
3	**WARNING: TO AVOID PERSONAL INJURY OR DEATH, DO NOT PLACE AN INTACT UNDEPLOYED CURTAIN AIRBAG FACE DOWN ON A HARD SURFACE, THE AIRBAG WILL PROPEL INTO THE AIR IF ACCIDENTALLY DEPLOYED.** Disconnect the Airbag Load Tool from the Left Curtain or Seat Airbag connector. Disconnect the Airbag Control Module connector(s). **NOTE: Check connectors - Clean and repair as necessary.** Connect the appropriate Load Tool ACM Adapter to the ACM connector. **WARNING: TO AVOID PERSONAL INJURY OR DEATH, TURN THE IGNITION OFF, THEN RECONNECT THE BATTERY.** Measure the voltage on the Left Curtain or Seat Squib Line 1 and Line 2 circuits between the Left Curtain or Seat Airbag connector and ground. Is there any voltage on either circuit? Yes → Repair Left Curtain or Seat Squib Line 1 or Line 2 circuits short to battery. Perform __AIRBAG VERIFICATION TEST - VER 1. No → Go To 4	All
4	**WARNING: TO AVOID PERSONAL INJURY OR DEATH, TURN THE IGNITION OFF, DISCONNECT THE BATTERY AND WAIT TWO MINUTES BEFORE PROCEEDING.** **WARNING: IF THE AIRBAG CONTROL MODULE IS DROPPED AT ANY TIME, IT MUST BE REPLACED. FAILURE TO TAKE THE PROPER PRECAUTIONS COULD RESULT IN ACCIDENTAL AIRBAG DEPLOYMENT AND PERSONAL INJURY OR DEATH.** If there are no possible causes remaining, view repair. Repair Replace the Airbag Control Module in accordance with Service Information. Perform __AIRBAG VERIFICATION TEST - VER 1.	All

LEFT CURTAIN OR SEAT SQUIB SHORT TO BATTERY — Continued

TEST	ACTION	APPLICABILITY
5	With the DRBIII®, record and erase all DTC's from all Airbag modules. If equipped with Passenger Airbag On - Off switch, read the DTC's in all switch positions. If any ACTIVE codes are present they must be resolved before diagnosing any stored codes. **WARNING: TO AVOID PERSONAL INJURY OR DEATH, TURN THE IGNITION OFF, DISCONNECT THE BATTERY AND WAIT TWO MINUTES BEFORE PROCEEDING.** Using the wiring diagram/schematic as a guide, inspect the wiring and connectors. Look for chaffed, pierced, pinched, or partially broken wires and broken, bent, pushed out, spread, corroded, or contaminated terminals. The following additional checks may assist you in identifying a possible intermittent problem. Reconnect any disconnected components and harness connector. **WARNING: TO AVOID PERSONAL INJURY OR DEATH, TURN THE IGNITION ON, THEN RECONNECT THE BATTERY.** With the DRBIII® monitor active codes as you work through the following steps. **WARNING: TO AVOID PERSONAL INJURY OR DEATH, MAINTAIN A SAFE DISTANCE FROM ALL AIRBAGS WHILE PERFORMING THE FOLLOWING STEPS.** Wiggle the wiring harness and connectors of the related airbag circuit or component. If codes are related to the Driver Airbag circuits, rotate the steering wheel from stop to stop. IF only stored codes return continue the test until the problem area has been isolated In the previous steps you have attempted to recreate the conditions responsible for setting active DTC in question. Are any ACTIVE DTCs present? Yes → Select appropriate symptom from Symptom List. No → No problem found at this time. Erase all codes before returning vehicle to customer.	All

Symptom:
LEFT CURTAIN OR SEAT SQUIB SHORT TO GROUND

When Monitored and Set Condition:

LEFT CURTAIN OR SEAT SQUIB SHORT TO GROUND

When Monitored: With the ignition on, the ACM monitors the resistance of the Left Curtain or Seat Squib circuits.

Set Condition: When the ACM detects a short to ground in either Left Curtain or Seat Squib circuits.

POSSIBLE CAUSES
LEFT CURTAIN OR SEAT SQUIB SHORT TO GROUND
LEFT CURTAIN OR SEAT SQUIB LINE 1 OR LINE 2 SHORTED TO GROUND
ACM, LEFT CURTAIN OR SEAT SQUIB SHORT TO GROUND
STORED CODE OR INTERMITTENT CONDITION
ACTIVE CODE PRESENT

TEST	ACTION	APPLICABILITY
1	Turn the ignition on. **NOTE: Ensure that the battery is fully charged.** **NOTE: For the purpose of this test, the AECM and ORC modules will be referred to as an ACM.** SELECT ACTIVE or STORED DTC: ACM - ACTIVE DTC Go To 2 ACM - STORED DTC Go To 5 **NOTE: When reconnecting Airbag system components, the ignition must be turned off and the battery must be disconnected.**	All

LEFT CURTAIN OR SEAT SQUIB SHORT TO GROUND — Continued

TEST	ACTION	APPLICABILITY
2	**WARNING: TO AVOID PERSONAL INJURY OR DEATH, TURN IGNITION OFF, DISCONNECT THE BATTERY AND WAIT TWO MINUTES BEFORE PROCEEDING.** Disconnect the Left Curtain or Seat Airbag connector. **NOTE: Check connectors - Clean and repair as necessary.** **WARNING: TO AVOID PERSONAL INJURY OR DEATH, DO NOT PLACE AN INTACT UNDEPLOYED CURTAIN AIRBAG FACE DOWN ON A HARD SURFACE, THE AIRBAG WILL PROPEL INTO THE AIR IF ACCIDENTALLY DEPLOYED.** Connect the appropriate Load Tool to the Left Curtain or Seat Airbag connector. **WARNING: TO AVOID PERSONAL INJURY OR DEATH, TURN IGNITION ON, THEN RECONNECT THE BATTERY.** With the DRBIII®, read active Airbag Control Module DTC's. Does the DRBIII® display LEFT CURTAIN OR SEAT SQUIB SHORT TO GROUND? Yes → Go To 3 No → Replace the Left Curtain or Seat Airbag in accordance with Service Instructions. Perform __AIRBAG VERIFICATION TEST - VER 1.	All
3	**WARNING: TO AVOID PERSONAL INJURY OR DEATH, TURN IGNITION OFF, DISCONNECT THE BATTERY AND WAIT TWO MINUTES BEFORE PROCEEDING.** **WARNING: TO AVOID PERSONAL INJURY OR DEATH, DO NOT PLACE AN INTACT UNDEPLOYED CURTAIN AIRBAG FACE DOWN ON A HARD SURFACE, THE AIRBAG WILL PROPEL INTO THE AIR IF ACCIDENTALLY DEPLOYED.** Disconnect the Load Tool from the Left Curtain or Seat Airbag connector. Disconnect the Airbag Control Module connector(s). **NOTE: Check connectors - Clean and repair as necessary.** Connect the appropriate Load Tool ACM adaptor to the ACM connector(s). Measure the resistance of the Left Curtain or Seat Squib Line 1 and Line 2 circuits between the Left Curtain or Seat Airbag connector and ground. Is the resistance below 10K ohms on either circuit? Yes → Repair Left Curtain or Seat Squib Line 1 or Line 2 shorted to ground. Perform __AIRBAG VERIFICATION TEST - VER 1. No → Go To 4	All
4	**WARNING: TO AVOID PERSONAL INJURY OR DEATH, TURN THE IGNITION OFF, DISCONNECT THE BATTERY AND WAIT TWO MINUTES BEFORE PROCEEDING.** **WARNING: IF THE AIRBAG CONTROL MODULE IS DROPPED AT ANY TIME, IT MUST BE REPLACED. FAILURE TO TAKE THE PROPER PRECAUTIONS COULD RESULT IN ACCIDENTAL AIRBAG DEPLOYMENT AND PERSONAL INJURY OR DEATH.** If there are no possible causes remaining, view repair. Repair Replace the Airbag Control Module in accordance with Service Information. Perform __AIRBAG VERIFICATION TEST - VER 1.	All

LEFT CURTAIN OR SEAT SQUIB SHORT TO GROUND — Continued

TEST	ACTION	APPLICABILITY
5	With the DRBIII®, record and erase all DTC's from all Airbag modules. If equipped with Passenger Airbag On - Off switch, read the DTC's in all switch positions. If any ACTIVE codes are present they must be resolved before diagnosing any stored codes. **WARNING: TO AVOID PERSONAL INJURY OR DEATH, TURN THE IGNITION OFF, DISCONNECT THE BATTERY AND WAIT TWO MINUTES BEFORE PROCEEDING.** Using the wiring diagram/schematic as a guide, inspect the wiring and connectors. Look for chaffed, pierced, pinched, or partially broken wires and broken, bent, pushed out, spread, corroded, or contaminated terminals. The following additional checks may assist you in identifying a possible intermittent problem. Reconnect any disconnected components and harness connector. **WARNING: TO AVOID PERSONAL INJURY OR DEATH, TURN THE IGNITION ON, THEN RECONNECT THE BATTERY.** With the DRBIII® monitor active codes as you work through the following steps. **WARNING: TO AVOID PERSONAL INJURY OR DEATH, MAINTAIN A SAFE DISTANCE FROM ALL AIRBAGS WHILE PERFORMING THE FOLLOWING STEPS.** Wiggle the wiring harness and connectors of the related airbag circuit or component. If codes are related to the Driver Airbag circuits, rotate the steering wheel from stop to stop. IF only stored codes return continue the test until the problem area has been isolated In the previous steps you have attempted to recreate the conditions responsible for setting active DTC in question. Are any ACTIVE DTCs present? Yes → Select appropriate symptom from Symptom List. No → No problem found at this time. Erase all codes before returning vehicle to customer.	All

Symptom List:

LEFT FRONT IMPACT SENSOR INTERNAL 1
NO LEFT FRONT IMPACT SENSOR COMMUNICATION

Test Note: All symptoms listed above are diagnosed using the same tests. The title for the tests will be LEFT FRONT IMPACT SENSOR INTERNAL 1.

When Monitored and Set Condition:

LEFT FRONT IMPACT SENSOR INTERNAL 1

When Monitored: The Left Front Impact sensors is equipped with onboard diagnostics to monitor the sensors internal circuits. If a problem is identified the sensor sends the Left Front Impact sensor internal 1 message to the ACM.

Set Condition: The code will set if the ACM receives an internal 1 message from the Left Front Impact Sensor.

NO LEFT FRONT IMPACT SENSOR COMMUNICATION

When Monitored: The ACM continuously communicates with the Left Front Impact Sensor over the sensor signal circuit. The sensor communication and onboard diagnostics are powered by the ACM signal.

Set Condition: The code will set, if the ACM and Left Front Sensor do not establish and maintain valid data communications.

POSSIBLE CAUSES
SIGNAL CIRCUIT SHORTED TO BATTERY
SIGNAL CIRCUIT SHORT TO GROUND
LEFT FRONT SENSOR 1 CIRCUITS SHORTED TOGETHER
GROUND CIRCUIT OPEN
SIGNAL CIRCUIT OPEN
ACM, LEFT FRONT IMPACT SENSOR 1
REPAIR IS COMPLETE
STORED CODE OR INTERMITTENT CONDITION
ACTIVE CODE PRESENT

LEFT FRONT IMPACT SENSOR INTERNAL 1 — Continued

TEST	ACTION	APPLICABILITY
1	Turn the ignition on. **NOTE: Ensure the battery is fully charged.** **NOTE: For the purpose of this test, the AECM and ORC modules will be referred to as an ACM.** SELECT ACTIVE or STORED DTC: ACM - ACTIVE DTC Go To 2 ACM - STORED DTC Go To 9 **NOTE: When reconnecting Airbag system components, the ignition must be turned off and the battery must be disconnected.**	All
2	**WARNING: TO AVOID PERSONAL INJURY OR DEATH, TURN THE IGNITION OFF, DISCONNECT THE BATTERY AND WAIT TWO MINUTES BEFORE PROCEEDING.** Disconnect the Left front Impact Sensor 1 connector. Disconnect the Airbag Control Module connector. **WARNING: TO AVOID PERSONAL INJURY OR DEATH, TURN THE IGNITION ON, THEN RECONNECT THE BATTERY.** Measure the voltage of the Left Front Impact Sensor 1 Signal circuit and sensor ground circuit at the Left Front Sensor 1 connector and ground. Is there any voltage present? Yes → Repair the Left Front Impact Sensor 1 circuits shorted to battery. Perform __AIRBAG VERIFICATION TEST - VER 1. No → Go To 3	All
3	**WARNING: TO AVOID PERSONAL INJURY OR DEATH, TURN IGNITION ON, THEN RECONNECT THE BATTERY.** Measure the resistance of the Left Front Impact Sensor 1 Signal circuit between the Left Front Impact Sensor 1 connector and ground. Is the resistance below 100K ohms? Yes → Repair the Left Font Impact Sense signal circuit shorted for a short to ground. Perform __AIRBAG VERIFICATION TEST - VER 1. No → Go To 4	All
4	Measure the resistance between the Left Front Impact Sensor 1 Signal and Sensor Ground circuits at the Left Front Impact Sensor 1 connector. Is the resistance below 100K ohms? Yes → Repair the Left Front Impact Sensor 1 circuits shorted together. Perform __AIRBAG VERIFICATION TEST - VER 1. No → Go To 5	All

LEFT FRONT IMPACT SENSOR INTERNAL 1 — Continued

TEST	ACTION	APPLICABILITY
5	Connect the appropriate Load Tool ACM Adaptor to the Airbag Control Module connector. Measure the resistance of the Left Front Impact Sensor 1 Ground circuit between the Driver Side Impact Sensor connector and the Load Tool ACM Adaptor. Is the resistance below 1 ohm? Yes → Go To 6 No → Repair the Left front Impact Sensor 1 Ground circuit open or high resistance. Perform __AIRBAG VERIFICATION TEST - VER 1.	All
6	Measure the resistance of the Left Front Impact Sensor 1 Signal circuit between the Driver Side Impact Sensor connector and the Load Tool ACM Adaptor. Is the resistance below 1 ohm? Yes → Go To 7 No → Repair the Left Front Impact Sensor 1 Signal circuit open or high resistance. Perform __AIRBAG VERIFICATION TEST - VER 1.	All
7	Replace the Left Front Impact Sensor 1. Reconnect the vehicle body harness to the impact sensor. Remove any special tools or jumper wires and reconnect all previously disconnected components - except the Battery. **WARNING: TO AVOID PERSONAL INJURY OR DEATH, TURN THE IGNITION ON, THEN RECONNECT THE BATTERY.** Connect the DRB to the Data Link Connector - use the most current software available. Use the DRB III and erase the stored codes in all airbag system modules. Turn the Ignition Off, and wait 15 seconds before turning the Ignition On. Wait one minute, and read active codes and if there are none present read the stored codes. DID the active Left Side Impact Sensor DTC return? Yes → Go To 8 No → Repair is complete. Perform __AIRBAG VERIFICATION TEST - VER 1.	All
8	**WARNING: TO AVOID PERSONAL INJURY OR DEATH, TURN THE IGNITION OFF, DISCONNECT THE BATTERY AND WAIT TWO MINUTES BEFORE PROCEEDING.** **WARNING: IF THE AIRBAG CONTROL MODULE IS DROPPED AT ANY TIME, IT MUST BE REPLACED. FAILURE TO TAKE THE PROPER PRECAUTIONS COULD RESULT IN ACCIDENTAL AIRBAG DEPLOYMENT AND PERSONAL INJURY OR DEATH.** If there are no possible causes remaining, view repair. Repair Replace the Airbag Control Module in accordance with Service Instructions. Perform __AIRBAG VERIFICATION TEST - VER 1.	All

LEFT FRONT IMPACT SENSOR INTERNAL 1 — Continued

TEST	ACTION	APPLICABILITY
9	With the DRBIII®, record and erase all DTC's from all Airbag modules. If equipped with Passenger Airbag On - Off switch, read the DTC's in all switch positions. If any ACTIVE codes are present they must be resolved before diagnosing any stored codes. **WARNING: TO AVOID PERSONAL INJURY OR DEATH, TURN THE IGNITION OFF, DISCONNECT THE BATTERY AND WAIT TWO MINUTES BEFORE PROCEEDING.** Using the wiring diagram/schematic as a guide, inspect the wiring and connectors. Look for chaffed, pierced, pinched, or partially broken wires and broken, bent, pushed out, spread, corroded, or contaminated terminals. The following additional checks may assist you in identifying a possible intermittent problem. Reconnect any disconnected components and harness connector. **WARNING: TO AVOID PERSONAL INJURY OR DEATH, TURN THE IGNITION ON, THEN RECONNECT THE BATTERY.** With the DRBIII® monitor active codes as you work through the following steps. **WARNING: TO AVOID PERSONAL INJURY OR DEATH, MAINTAIN A SAFE DISTANCE FROM ALL AIRBAGS WHILE PERFORMING THE FOLLOWING STEPS.** Wiggle the wiring harness and connectors of the related airbag circuit or component. If codes are related to the Driver Airbag circuits, rotate the steering wheel from stop to stop. IF only stored codes return continue the test until the problem area has been isolated In the previous steps you have attempted to recreate the conditions responsible for setting active DTC in question. Are any ACTIVE DTCs present? Yes → Select appropriate symptom from Symptom List. No → No problem found at this time. Erase all codes before returning vehicle to customer.	All

Symptom List:

LEFT SIDE IMPACT SENSOR 1 INTERNAL 1
NO LEFT SIDE IMPACT SENSOR 1 COMMUNICATION

Test Note: All symptoms listed above are diagnosed using the same tests. The title for the tests will be LEFT SIDE IMPACT SENSOR 1 INTERNAL 1.

When Monitored and Set Condition:

LEFT SIDE IMPACT SENSOR 1 INTERNAL 1

When Monitored: At ignition on, the Left Side Impact Sensor 1 is equipped with onboard diagnostics to monitor the sensors internal circuits. If a problem is identified the sensor sends the Left Side Impact Sensor 1 internal 1 message to the ACM.

Set Condition: The code will set, if the ACM receives an Impact Sensor Internal 1 message from the Left Side Impact Sensor 1.

NO LEFT SIDE IMPACT SENSOR 1 COMMUNICATION

When Monitored: The ACM continuously communicates with the Left Side Impact Sensor 1 over the sensor signal circuit. The sensor communication and onboard diagnostics are powered by the ACM signal.

Set Condition: The code will set, if the ACM and Left Side Impact Sensor 1 do not establish and maintain valid data communications.

POSSIBLE CAUSES
SIGNAL CIRCUIT SHORTED TO BATTERY
SIGNAL CIRCUIT SHORT TO GROUND
LEFT SIDE SENSOR 1 CIRCUITS SHORTED TOGETHER
GROUND CIRCUIT OPEN
SIGNAL CIRCUIT OPEN
ACM, LEFT SIDE IMPACT SENSOR 1
REPAIR IS COMPLETE
STORED CODE OR INTERMITTENT CONDITION
ACTIVE CODE PRESENT

LEFT SIDE IMPACT SENSOR 1 INTERNAL 1 — Continued

TEST	ACTION	APPLICABILITY
1	Turn the ignition on. **NOTE: Ensure the battery is fully charged.** **NOTE: For the purpose of this test, the AECM and ORC modules will be referred to as an ACM.** SELECT ACTIVE or STORED DTC: ACM - ACTIVE DTC Go To 2 ACM - STORED DTC Go To 9 **NOTE: When reconnecting Airbag system components, the ignition must be turned off and the battery must be disconnected.**	All
2	**WARNING: TO AVOID PERSONAL INJURY OR DEATH, TURN THE IGNITION OFF, DISCONNECT THE BATTERY AND WAIT TWO MINUTES BEFORE PROCEEDING.** Disconnect the Left Side Impact Sensor 1 connector. Disconnect the Airbag Control Module connector. **WARNING: TO AVOID PERSONAL INJURY OR DEATH, TURN THE IGNITION ON, THEN RECONNECT THE BATTERY.** Measure the voltage of the Left Side Impact Sensor 1 Signal circuit and sensor 1 ground circuit at the Left Side Sensor 1 connector and ground. Is there any voltage present? Yes → Repair the Left Side Impact Sensor 3 circuits shorted to battery. Perform __AIRBAG VERIFICATION TEST - VER 1. No → Go To 3	All
3	**WARNING: TO AVOID PERSONAL INJURY OR DEATH, TURN IGNITION ON, THEN RECONNECT THE BATTERY.** Measure the resistance of the Left Side Impact Sensor 1 Signal circuit between the Left Side Impact Sensor 1 connector and ground. Is the resistance below 100K ohms? Yes → Repair the Left Side Impact Sense 1 Signal circuit shorted for a short to ground. Perform __AIRBAG VERIFICATION TEST - VER 1. No → Go To 4	All
4	Measure the resistance between the Driver Side Impact Sensor Signal and Sensor Ground circuits at the Left Side Impact Sensor 1 connector. Is the resistance below 100K ohms? Yes → Repair the Left Side Impact Sensor 1 circuits shorted together. Perform __AIRBAG VERIFICATION TEST - VER 1. No → Go To 5	All

LEFT SIDE IMPACT SENSOR 1 INTERNAL 1 — Continued

TEST	ACTION	APPLICABILITY
5	Connect the appropriate Load Tool ACM Adaptor to the Airbag Control Module connector. Measure the resistance of the Left Side Impact Sensor 1 Ground circuit between the Left Side Impact Sensor 1 connector and the Load Tool ACM Adaptor. Is the resistance below 1 ohm? Yes → Go To 6 No → Repair the Left Side Impact Sensor 1 Ground circuit open or high resistance. Perform __AIRBAG VERIFICATION TEST - VER 1.	All
6	Measure the resistance of the Left Side Impact Sensor 1 Signal circuit between the Left Side Impact Sensor 1 connector and the Load Tool ACM Adaptor. Is the resistance below 1 ohm? Yes → Go To 7 No → Repair the Left Side Impact Sensor 1 Signal circuit open or high resistance. Perform __AIRBAG VERIFICATION TEST - VER 1.	All
7	Replace the Left Side Impact Sensor 1. Reconnect the vehicle body harness to the impact sensor. Remove any special tools or jumper wires and reconnect all previously disconnected components - except the Battery. **WARNING: TO AVOID PERSONAL INJURY OR DEATH, TURN THE IGNITION ON, THEN RECONNECT THE BATTERY.** Connect the DRB to the Data Link Connector - use the most current software available. Use the DRB III and erase the stored codes in all airbag system modules. Turn the Ignition Off, and wait 15 seconds before turning the Ignition On. Wait one minute, and read active codes and if there are none present read the stored codes. DID the active Left Side Impact Sensor 1 DTC return? Yes → Go To 8 No → Repair is complete. Perform __AIRBAG VERIFICATION TEST - VER 1.	All
8	**WARNING: TO AVOID PERSONAL INJURY OR DEATH, TURN THE IGNITION OFF, DISCONNECT THE BATTERY AND WAIT TWO MINUTES BEFORE PROCEEDING.** **WARNING: IF THE AIRBAG CONTROL MODULE IS DROPPED AT ANY TIME, IT MUST BE REPLACED. FAILURE TO TAKE THE PROPER PRECAUTIONS COULD RESULT IN ACCIDENTAL AIRBAG DEPLOYMENT AND PERSONAL INJURY OR DEATH.** If there are no possible causes remaining, view repair. Repair Replace the Airbag Control Module in accordance with Service Instructions. Perform __AIRBAG VERIFICATION TEST - VER 1.	All

LEFT SIDE IMPACT SENSOR 1 INTERNAL 1 — Continued

TEST	ACTION	APPLICABILITY
9	With the DRBIII®, record and erase all DTC's from all Airbag modules. If equipped with Passenger Airbag On - Off switch, read the DTC's in all switch positions. If any ACTIVE codes are present they must be resolved before diagnosing any stored codes. **WARNING: TO AVOID PERSONAL INJURY OR DEATH, TURN THE IGNITION OFF, DISCONNECT THE BATTERY AND WAIT TWO MINUTES BEFORE PROCEEDING.** Using the wiring diagram/schematic as a guide, inspect the wiring and connectors. Look for chaffed, pierced, pinched, or partially broken wires and broken, bent, pushed out, spread, corroded, or contaminated terminals. The following additional checks may assist you in identifying a possible intermittent problem. Reconnect any disconnected components and harness connector. **WARNING: TO AVOID PERSONAL INJURY OR DEATH, TURN THE IGNITION ON, THEN RECONNECT THE BATTERY.** With the DRBIII® monitor active codes as you work through the following steps. **WARNING: TO AVOID PERSONAL INJURY OR DEATH, MAINTAIN A SAFE DISTANCE FROM ALL AIRBAGS WHILE PERFORMING THE FOLLOWING STEPS.** Wiggle the wiring harness and connectors of the related airbag circuit or component. If codes are related to the Driver Airbag circuits, rotate the steering wheel from stop to stop. IF only stored codes return continue the test until the problem area has been isolated In the previous steps you have attempted to recreate the conditions responsible for setting active DTC in question. Are any ACTIVE DTCs present? Yes → Select appropriate symptom from Symptom List. No → No problem found at this time. Erase all codes before returning vehicle to customer.	All

Symptom List:

LEFT SIDE IMPACT SENSOR 2 INTERNAL 1
NO LEFT SIDE IMPACT SENSOR 2 COMMUNICATION

Test Note: All symptoms listed above are diagnosed using the same tests. The title for the tests will be LEFT SIDE IMPACT SENSOR 2 INTERNAL 1.

When Monitored and Set Condition:

LEFT SIDE IMPACT SENSOR 2 INTERNAL 1

When Monitored: At ignition on, the Left Side Impact Sensor 2 is equipped with onboard diagnostics to monitor the sensors internal circuits. If a problem is identified the sensor sends the Left Side Impact Sensor 1 internal 1 message to the ACM.

Set Condition: The code will set, if the ACM receives an Impact Sensor Internal 1 message from the Left Side Impact Sensor 2.

NO LEFT SIDE IMPACT SENSOR 2 COMMUNICATION

When Monitored: The ACM continuously communicates with the Left Side Impact Sensor 2 over the sensor signal circuit. The sensor communication and onboard diagnostics are powered by the ACM signal.

Set Condition: The code will set, if the ACM and Left Side Impact Sensor 2 do not establish and maintain valid data communications.

POSSIBLE CAUSES
SIGNAL CIRCUIT SHORTED TO BATTERY
SIGNAL CIRCUIT SHORT TO GROUND
LEFT SIDE SENSOR 2 CIRCUITS SHORTED TOGETHER
GROUND CIRCUIT OPEN
SIGNAL CIRCUIT OPEN
ACM, LEFT SIDE IMPACT SENSOR 2
REPAIR IS COMPLETE
STORED CODE OR INTERMITTENT CONDITION
ACTIVE CODE PRESENT

LEFT SIDE IMPACT SENSOR 2 INTERNAL 1 — Continued

TEST	ACTION	APPLICABILITY
1	Turn the ignition on. **NOTE: Ensure the battery is fully charged.** **NOTE: For the purpose of this test, the AECM and ORC modules will be referred to as an ACM.** SELECT ACTIVE or STORED DTC: ACM - ACTIVE DTC Go To 2 ACM - STORED DTC Go To 9 **NOTE: When reconnecting Airbag system components, the ignition must be turned off and the battery must be disconnected.**	All
2	**WARNING: TO AVOID PERSONAL INJURY OR DEATH, TURN THE IGNITION OFF, DISCONNECT THE BATTERY AND WAIT TWO MINUTES BEFORE PROCEEDING.** Disconnect the Left Side Impact Sensor connector. Disconnect the Airbag Control Module connector. **WARNING: TO AVOID PERSONAL INJURY OR DEATH, TURN THE IGNITION ON, THEN RECONNECT THE BATTERY.** Measure the voltage of the Left Side Impact Sensor 2 Signal circuit and sensor 2 ground circuit at the Left Side Sensor 2 connector and ground. Is there any voltage present? Yes → Repair the Left Side Impact Sensor 2 circuits shorted to battery. Perform __AIRBAG VERIFICATION TEST - VER 1. No → Go To 3	All
3	**WARNING: TO AVOID PERSONAL INJURY OR DEATH, TURN IGNITION ON, THEN RECONNECT THE BATTERY.** Measure the resistance of the Left Side Impact Sensor 2 Signal circuit between the Left Side Impact Sensor 2 connector and ground. Is the resistance below 100K ohms? Yes → Repair the Left Side Impact Sense 2 signal circuit shorted for a short to ground. Perform __AIRBAG VERIFICATION TEST - VER 1. No → Go To 4	All
4	Measure the resistance between the Left Side Impact Sensor 2 Signal and Sensor Ground circuits at the Left Side Impact Sensor 2 connector. Is the resistance below 100K ohms? Yes → Repair the Left Side Impact Sensor 2 circuits shorted together. Perform __AIRBAG VERIFICATION TEST - VER 1. No → Go To 5	All

LEFT SIDE IMPACT SENSOR 2 INTERNAL 1 — Continued

TEST	ACTION	APPLICABILITY
5	Connect the appropriate Load Tool ACM Adaptor to the Airbag Control Module connector. Measure the resistance of the Driver Side Impact Sensor Ground circuit between the Left Side Impact Sensor 2 connector and the Load Tool ACM Adaptor. Is the resistance below 1 ohm? Yes → Go To 6 No → Repair the Left Side Impact Sensor 2 Ground circuit open or high resistance. Perform __AIRBAG VERIFICATION TEST - VER 1.	All
6	Measure the resistance of the Left Side Impact Sensor 2 Signal circuit between the Left Side Impact Sensor 2 connector and the Load Tool ACM Adaptor. Is the resistance below 1 ohm? Yes → Go To 7 No → Repair the Left Side Impact Sensor Signal 2 circuit open or high resistance. Perform __AIRBAG VERIFICATION TEST - VER 1.	All
7	Replace the Left Side Impact Sensor 2. Reconnect the vehicle body harness to the impact sensor. Remove any special tools or jumper wires and reconnect all previously disconnected components - except the Battery. **WARNING: TO AVOID PERSONAL INJURY OR DEATH, TURN THE IGNITION ON, THEN RECONNECT THE BATTERY.** Connect the DRB to the Data Link Connector - use the most current software available. Use the DRB III and erase the stored codes in all airbag system modules. Turn the Ignition Off, and wait 15 seconds before turning the Ignition On. Wait one minute, and read active codes and if there are none present read the stored codes. DID the active Left Side Impact Sensor 2 DTC return? Yes → Go To 8 No → Repair is complete. Perform __AIRBAG VERIFICATION TEST - VER 1.	All
8	**WARNING: TO AVOID PERSONAL INJURY OR DEATH, TURN THE IGNITION OFF, DISCONNECT THE BATTERY AND WAIT TWO MINUTES BEFORE PROCEEDING.** **WARNING: IF THE AIRBAG CONTROL MODULE IS DROPPED AT ANY TIME, IT MUST BE REPLACED. FAILURE TO TAKE THE PROPER PRECAUTIONS COULD RESULT IN ACCIDENTAL AIRBAG DEPLOYMENT AND PERSONAL INJURY OR DEATH.** If there are no possible causes remaining, view repair. Repair Replace the Airbag Control Module in accordance with Service Instructions. Perform __AIRBAG VERIFICATION TEST - VER 1.	All

LEFT SIDE IMPACT SENSOR 2 INTERNAL 1 — Continued

TEST	ACTION	APPLICABILITY
9	With the DRBIII®, record and erase all DTC's from all Airbag modules. If equipped with Passenger Airbag On - Off switch, read the DTC's in all switch positions. If any ACTIVE codes are present they must be resolved before diagnosing any stored codes. **WARNING: TO AVOID PERSONAL INJURY OR DEATH, TURN THE IGNITION OFF, DISCONNECT THE BATTERY AND WAIT TWO MINUTES BEFORE PROCEEDING.** Using the wiring diagram/schematic as a guide, inspect the wiring and connectors. Look for chaffed, pierced, pinched, or partially broken wires and broken, bent, pushed out, spread, corroded, or contaminated terminals. The following additional checks may assist you in identifying a possible intermittent problem. Reconnect any disconnected components and harness connector. **WARNING: TO AVOID PERSONAL INJURY OR DEATH, TURN THE IGNITION ON, THEN RECONNECT THE BATTERY.** With the DRBIII® monitor active codes as you work through the following steps. **WARNING: TO AVOID PERSONAL INJURY OR DEATH, MAINTAIN A SAFE DISTANCE FROM ALL AIRBAGS WHILE PERFORMING THE FOLLOWING STEPS.** Wiggle the wiring harness and connectors of the related airbag circuit or component. If codes are related to the Driver Airbag circuits, rotate the steering wheel from stop to stop. IF only stored codes return continue the test until the problem area has been isolated In the previous steps you have attempted to recreate the conditions responsible for setting active DTC in question. Are any ACTIVE DTCs present? Yes → Select appropriate symptom from Symptom List. No → No problem found at this time. Erase all codes before returning vehicle to customer.	All

Symptom List:

LEFT SIDE IMPACT SENSOR 3 INTERNAL 1
NO LEFT SIDE IMPACT SENSOR 3 COMMUNICATION

Test Note: All symptoms listed above are diagnosed using the same tests. The title for the tests will be LEFT SIDE IMPACT SENSOR 3 INTERNAL 1.

When Monitored and Set Condition:

LEFT SIDE IMPACT SENSOR 3 INTERNAL 1

When Monitored: At ignition on, the Left Side Impact Sensor 3 is equipped with onboard diagnostics to monitor the sensors internal circuits. If a problem is identified the sensor sends the Left Side Impact Sensor 1 internal 1 message to the ACM.

Set Condition: The code will set, if the ACM receives an Impact Sensor Internal 3 message from the Left Side Impact Sensor 1.

NO LEFT SIDE IMPACT SENSOR 3 COMMUNICATION

When Monitored: The ACM continuously communicates with the Left Side Impact Sensor 3 over the sensor signal circuit. The sensor communication and onboard diagnostics are powered by the ACM signal.

Set Condition: The code will set, if the ACM and Left Side Impact Sensor 3 do not establish and maintain valid data communications.

POSSIBLE CAUSES
SIGNAL CIRCUIT SHORTED TO BATTERY
SIGNAL CIRCUIT SHORT TO GROUND
LEFT SIDE SENSOR 3 CIRCUITS SHORTED TOGETHER
SIGNAL CIRCUIT OPEN
ACM, LEFT SIDE IMPACT SENSOR 3
REPAIR IS COMPLETE
STORED CODE OR INTERMITTENT CONDITION
ACTIVE CODE PRESENT

LEFT SIDE IMPACT SENSOR 3 INTERNAL 1 — Continued

TEST	ACTION	APPLICABILITY
1	Turn the ignition on. **NOTE: Ensure the battery is fully charged.** **NOTE: For the purpose of this test, the AECM and ORC modules will be referred to as an ACM.** SELECT ACTIVE or STORED DTC: ACM - ACTIVE DTC Go To 2 ACM - STORED DTC Go To 8 **NOTE: When reconnecting Airbag system components, the ignition must be turned off and the battery must be disconnected.**	All
2	**WARNING: TO AVOID PERSONAL INJURY OR DEATH, TURN THE IGNITION OFF, DISCONNECT THE BATTERY AND WAIT TWO MINUTES BEFORE PROCEEDING.** Disconnect the Left Side Impact Sensor 3 connector. Disconnect the Airbag Control Module connector. **WARNING: TO AVOID PERSONAL INJURY OR DEATH, TURN THE IGNITION ON, THEN RECONNECT THE BATTERY.** Measure the voltage of the Left Side Impact Sensor 3 Signal circuit and sensor ground at the Left Side Impact Sensor 3 connector. Is there any voltage present? Yes → Repair the Left Side Impact Sensor 3 Signal circuit shorted to battery. Perform __AIRBAG VERIFICATION TEST - VER 1. No → Go To 3	All
3	**WARNING: TO AVOID PERSONAL INJURY OR DEATH, TURN IGNITION ON, THEN RECONNECT THE BATTERY.** Measure the resistance of the Left Side Impact Sensor 3 Signal circuit between the Left Side Impact Sensor 3 connector and ground. Is the resistance below 100K ohms? Yes → Repair the Left Side Sense 3 Signal circuit shorted for a short to ground. Perform __AIRBAG VERIFICATION TEST - VER 1. No → Go To 4	All
4	Measure the resistance between the Left Side Impact Sensor Signal and Sensor Ground circuits at the Left Side Impact Sensor connector. Is the resistance below 100K ohms? Yes → Repair the Left Side Impact Sensor 3 circuits shorted together. Perform __AIRBAG VERIFICATION TEST - VER 1. No → Go To 5	All
5	Measure the resistance of the Left Side Impact Sensor 3 Signal circuit between the Left Side Impact Sensor 3 connector and the Load Tool adaptor. Is the resistance below 1 ohm? Yes → Go To 6 No → Repair the Left Side Impact Sensor 3 Signal circuit open or high resistance. Perform __AIRBAG VERIFICATION TEST - VER 1.	All

LEFT SIDE IMPACT SENSOR 3 INTERNAL 1 — Continued

TEST	ACTION	APPLICABILITY
6	Replace the Left Side Impact Sensor 3. Reconnect the vehicle body harness to the impact sensor. Remove any special tools or jumper wires and reconnect all previously disconnected components - except the Battery. **WARNING: TO AVOID PERSONAL INJURY OR DEATH, TURN THE IGNITION ON, THEN RECONNECT THE BATTERY.** Connect the DRB to the Data Link Connector - use the most current software available. Use the DRB III and erase the stored codes in all airbag system modules. Turn the Ignition Off, and wait 15 seconds before turning the Ignition On. Wait one minute, and read active codes and if there are none present read the stored codes. DID the active Left Side Impact Sensor 3 DTC return? Yes → Go To 7 No → Repair is complete. Perform __AIRBAG VERIFICATION TEST - VER 1.	All
7	**WARNING: TO AVOID PERSONAL INJURY OR DEATH, TURN THE IGNITION OFF, DISCONNECT THE BATTERY AND WAIT TWO MINUTES BEFORE PROCEEDING.** **WARNING: IF THE AIRBAG CONTROL MODULE IS DROPPED AT ANY TIME, IT MUST BE REPLACED. FAILURE TO TAKE THE PROPER PRECAUTIONS COULD RESULT IN ACCIDENTAL AIRBAG DEPLOYMENT AND PERSONAL INJURY OR DEATH.** If there are no possible causes remaining, view repair. Repair Replace the Airbag Control Module in accordance with Service Instructions. Perform __AIRBAG VERIFICATION TEST - VER 1.	All

LEFT SIDE IMPACT SENSOR 3 INTERNAL 1 — Continued

TEST	ACTION	APPLICABILITY
8	With the DRBIII®, record and erase all DTC's from all Airbag modules. If equipped with Passenger Airbag On - Off switch, read the DTC's in all switch positions. If any ACTIVE codes are present they must be resolved before diagnosing any stored codes. **WARNING: TO AVOID PERSONAL INJURY OR DEATH, TURN THE IGNITION OFF, DISCONNECT THE BATTERY AND WAIT TWO MINUTES BEFORE PROCEEDING.** Using the wiring diagram/schematic as a guide, inspect the wiring and connectors. Look for chaffed, pierced, pinched, or partially broken wires and broken, bent, pushed out, spread, corroded, or contaminated terminals. The following additional checks may assist you in identifying a possible intermittent problem. Reconnect any disconnected components and harness connector. **WARNING: TO AVOID PERSONAL INJURY OR DEATH, TURN THE IGNITION ON, THEN RECONNECT THE BATTERY.** With the DRBIII® monitor active codes as you work through the following steps. **WARNING: TO AVOID PERSONAL INJURY OR DEATH, MAINTAIN A SAFE DISTANCE FROM ALL AIRBAGS WHILE PERFORMING THE FOLLOWING STEPS.** Wiggle the wiring harness and connectors of the related airbag circuit or component. If codes are related to the Driver Airbag circuits, rotate the steering wheel from stop to stop. IF only stored codes return continue the test until the problem area has been isolated In the previous steps you have attempted to recreate the conditions responsible for setting active DTC in question. Are any ACTIVE DTCs present? Yes → Select appropriate symptom from Symptom List. No → No problem found at this time. Erase all codes before returning vehicle to customer.	All

Symptom List:

LOSS OF IGNITION RUN - START
ORC RUN - START DRIVER OPEN
ORC RUN - START DRIVER OVER CURRENT
ORC RUN - START DRIVER OVER TEMP
ORC RUN - START DRIVER OVER VOLT
ORC RUN - START DRIVER SHORT TO GROUND

Test Note: All symptoms listed above are diagnosed using the same tests. The title for the tests will be LOSS OF IGNITION RUN - START.

When Monitored and Set Condition:

LOSS OF IGNITION RUN - START

When Monitored: With the ignition in the Run-Start position the module monitors the Run-Start Driver circuit for proper system voltage.

Set Condition: If the voltage on the Run-Start Driver circuit drops below 4.5 volts, the code will set.

ORC RUN - START DRIVER OPEN

When Monitored: When the ignition is turned OFF, the microprocessor controlled transistor (high side driver) places a diagnostic voltage on the ORC Run Only circuit for 60 seconds. An open high side driver (HSD) circuit voltage is between 2.4 and 5.0 volts.

Set Condition: This code will set within 10 second, if the microprocessor senses 2.4 to 5.0 volts on the HSD. Note: the diagnostic voltage will only last for 60 seconds after the ignition is turned off.

ORC RUN - START DRIVER OVER CURRENT

When Monitored: The FCM uses a microprocessor controlled transistor (high side driver) to supply power to the ORC. The microprocessor monitors the high side driver (HSD) internal temperature when the ignition is in the Run or Start position.

Set Condition: The code will set within 1 second, if the microprocessor senses high HSD internal temperature. The high temperature is caused by over current.

ORC RUN - START DRIVER OVER TEMP

When Monitored: The FCM uses a microprocessor controlled transistor (high side driver) to supply power to the ORC. The microprocessor monitors the high side driver (HSD) internal temperature when the ignition is in the Run or Start position.

Set Condition: The code will set within 2.5 second, if the microprocessor senses high HSD internal temperature. The high temperature is caused by over current.

LOSS OF IGNITION RUN - START — Continued

ORC RUN - START DRIVER OVER VOLT

When Monitored: The FCM uses a microprocessor controlled transistor (high side driver) to supply power to the ORC. The microprocessor monitors the high side driver (HSD) battery voltage when the ignition is in the Run or Start position.

Set Condition: The code will set if the microprocessor senses HSD battery voltage is over 30 volts.

ORC RUN - START DRIVER SHORT TO GROUND

When Monitored: The FCM uses a microprocessor controlled transistor (high side driver) to supply power to the ORC. The microprocessor monitors the high side driver (HSD) circuit for short to ground when the ignition is in the Run or Start position.

Set Condition: The code will set within 1 second, if the microprocessor senses high HSD internal temperature. The high temperature is caused by short to ground.

POSSIBLE CAUSES
ORC, LOSS OF IGNITION RUN - START
ACM, ORC RUN - START OPEN
FCM, ORC RUN - START OPEN
IPM, ORC RUN - START DRIVER OPEN
ORC RUN - START DRIVER CIRCUIT OPEN
FCM, ORC RUN - START SHORT
IPM, ORC RUN - START SHORT
ORC RUN - START CIRCUIT SHORT
ACM, ORC RUN - START DRIVER CIRCUIT SHORT
HIGH BATTERY VOLTAGE
FCM, RUN - START OVER VOLTAGE
STORED CODE OR INTERMITTENT CONDITION
ACTIVE CODE PRESENT

LOSS OF IGNITION RUN - START — Continued

TEST	ACTION	APPLICABILITY
1	Ensure the battery is fully charged. Turn the ignition on. **NOTE: For the purpose of this test, the AECM and ORC modules will be referred to as an ACM.** SELECT MODULE AND DTC TYPE: ACM - ACTIVE DTC Go To 2 ACM - STORED DTC Go To 13 FCM - ACTIVE DTC Go To 4 FCM - STORED DTC Go To 13 **NOTE: When reconnecting Airbag system components, the ignition must be turned off and the battery must be disconnected.**	All
2	With the DRBIII®, read the active FCM DTC's. Are there any active ORC RUN - START DRIVER DTC's? Yes → Go To 4 No → Go To 3	All
3	**WARNING: TO AVOID PERSONAL INJURY OR DEATH, TURN THE IGNITION OFF, DISCONNECT THE BATTERY AND WAIT TWO MINUTES BEFORE PROCEEDING.** **WARNING: IF THE AIRBAG CONTROL MODULE IS DROPPED AT ANY TIME, IT MUST BE REPLACED. FAILURE TO TAKE THE PROPER PRECAUTIONS COULD RESULT IN ACCIDENTAL AIRBAG DEPLOYMENT AND PERSONAL INJURY OR DEATH.** If there are no possible causes remaining, view repair. Repair: Replace the Airbag Control Module in accordance with Service Instructions. Perform __AIRBAG VERIFICATION TEST - VER 1.	All
4	Select the FCM active RUN - START DTC displayed on the DRB. 1. ORC RUN-START DRIVER OPEN Go To 5 2. ORC RUN-START DRIVER OVER VOLTAGE Go To 8 3. ORC RUN-START DRIVER SHORT TO GROUND Go To 9 4. ORC RUN-START DRIVER OVER CURRENT Go To 9 5. ORC RUN-START DRIVER OVER TEMP Go To 9	All

LOSS OF IGNITION RUN - START — Continued

TEST	ACTION	APPLICABILITY
5	**WARNING: TO AVOID PERSONAL INJURY OR DEATH, TURN THE IGNITION OFF, DISCONNECT THE BATTERY AND WAIT TWO MINUTES BEFORE PROCEEDING.** **WARNING: IF THE AIRBAG CONTROL MODULE IS DROPPED AT ANY TIME, IT MUST BE REPLACED. FAILURE TO TAKE THE PROPER PRECAUTIONS COULD RESULT IN ACCIDENTAL AIRBAG DEPLOYMENT AND PERSONAL INJURY OR DEATH.** Disconnect the Airbag Control Module connector. Connect the appropriate Load Tool ACM Adaptor to the Airbag Control Module connector(s). **WARNING: TO AVOID PERSONAL INJURY OR DEATH, TURN THE IGNITION ON, TO AVOID PERSONAL INJURY OR DEATH, THEN RECONNECT THE BATTERY.** Connect a test light to ground and the ORC Run-Start Driver circuit at the ACM adaptor. Turn the ignition off, wait 90 seconds, then turn the ignition on. With the DRBIII®, read the active FCM DTC's. Does the DRB show an active ORC RUN - START DRIVER OPEN code? Yes → Go To 6 No → Replace the Airbag Control Module in accordance with Service Instructions. Perform __AIRBAG VERIFICATION TEST - VER 1.	All
6	Disconnect the Front Control Module. **NOTE: Check connectors - Clean and repair as necessary.** **WARNING: TO AVOID PERSONAL INJURY OR DEATH, TURN THE IGNITION OFF, DISCONNECT THE BATTERY AND WAIT TWO MINUTES BEFORE PROCEEDING.** Measure the resistance of the ORC Run - Start Driver circuit between the Front Control Module connector and the ACM Adapter. Is the resistance below 1.0 ohms? Yes → Replace the Front Control Module. Perform __AIRBAG VERIFICATION TEST - VER 1. No → Go To 7	All
7	Gain access to the connectors on the bottom of the IPM. Disconnect the IPM C7 connector. **NOTE: Check connectors - Clean and repair as necessary.** Measure the resistance of the ORC Run Only Driver circuit between the IPM C7 connector and the Airbag Control Module adaptor. Is the resistance below 1.0 ohms? Yes → Replace the IPM. Perform __AIRBAG VERIFICATION TEST - VER 1. No → Repair the open ORC Run - Start Driver circuit. Perform __AIRBAG VERIFICATION TEST - VER 1.	All
8	Measure the battery voltage. Is the voltage above 30.0 volts? Yes → Refer to engine symptom list for the Battery Voltage Too High symptom. Perform __AIRBAG VERIFICATION TEST - VER 1. No → Replace the Front Control Module. Perform __AIRBAG VERIFICATION TEST - VER 1.	All

LOSS OF IGNITION RUN - START — Continued

TEST	ACTION	APPLICABILITY
9	**WARNING: TO AVOID PERSONAL INJURY OR DEATH, TURN THE IGNITION OFF, DISCONNECT THE BATTERY AND WAIT TWO MINUTES BEFORE PROCEEDING.** Disconnect the Front Control Module connector. **NOTE: Check connectors - Clean and repair as necessary.** Measure the resistance of the ORC Run - Start Driver circuit between the Front Control Module connector and ground. Is the resistance below 500K ohms? Yes → Go To 10 No → Replace the Front Control Module. Perform __AIRBAG VERIFICATION TEST - VER 1.	All
10	Gain access to the connectors on the bottom of the IPM. Disconnect the IPM C7 connector. **NOTE: Check connectors - Clean and repair as necessary.** Measure the resistance of the ORC Run - Start Driver circuit between the IPM C7 connector and ground. Is the resistance below 500K ohms? Yes → Go To 11 No → Replace the IPM. Perform __AIRBAG VERIFICATION TEST - VER 1.	All
11	Disconnect the Airbag Control Module connector. **WARNING: IF THE AIRBAG CONTROL MODULE IS DROPPED AT ANY TIME, IT MUST BE REPLACED. FAILURE TO TAKE THE PROPER PRECAUTIONS COULD RESULT IN ACCIDENTAL AIRBAG DEPLOYMENT AND PERSONAL INJURY OR DEATH.** **NOTE: Check connectors - Clean and repair as necessary.** Connect the appropriate Load Tool ACM Adaptor to the Airbag Control Module connector. Measure the resistance of the ORC Run - Start Driver circuit between the IPM C7 connector and ground. Is the resistance below 500K ohms? Yes → Repair the ORC Run - Start Driver circuit shorted to ground. Perform __AIRBAG VERIFICATION TEST - VER 1. No → Go To 12	All
12	**WARNING: IF THE AIRBAG CONTROL MODULE IS DROPPED AT ANY TIME, IT MUST BE REPLACED. FAILURE TO TAKE THE PROPER PRECAUTIONS COULD RESULT IN ACCIDENTAL AIRBAG DEPLOYMENT AND PERSONAL INJURY OR DEATH.** If there are no possible causes remaining, view repair. Repair: Replace the Airbag Control Module in accordance with Service Instructions. Perform __AIRBAG VERIFICATION TEST - VER 1.	All

LOSS OF IGNITION RUN - START — Continued

TEST	ACTION	APPLICABILITY
13	With the DRBIII®, record and erase all DTC's from all Airbag modules. If equipped with Passenger Airbag On - Off switch, read the DTC's in all switch positions. If any ACTIVE codes are present they must be resolved before diagnosing any stored codes. **WARNING: TO AVOID PERSONAL INJURY OR DEATH, TURN THE IGNITION OFF, DISCONNECT THE BATTERY AND WAIT TWO MINUTES BEFORE PROCEEDING.** Using the wiring diagram/schematic as a guide, inspect the wiring and connectors. Look for chaffed, pierced, pinched, or partially broken wires and broken, bent, pushed out, spread, corroded, or contaminated terminals. The following additional checks may assist you in identifying a possible intermittent problem. Reconnect any disconnected components and harness connector. **WARNING: TO AVOID PERSONAL INJURY OR DEATH, TURN THE IGNITION ON, THEN RECONNECT THE BATTERY.** With the DRBIII® monitor active codes as you work through the following steps. **WARNING: TO AVOID PERSONAL INJURY OR DEATH, MAINTAIN A SAFE DISTANCE FROM ALL AIRBAGS WHILE PERFORMING THE FOLLOWING STEPS.** Wiggle the wiring harness and connectors of the related airbag circuit or component. If codes are related to the Driver Airbag circuits, rotate the steering wheel from stop to stop. IF only stored codes return continue the test until the problem area has been isolated In the previous steps you have attempted to recreate the conditions responsible for setting active DTC in question. Are any ACTIVE DTCs present? Yes → Select appropriate symptom from Symptom List. No → No problem found at this time. Erase all codes before returning vehicle to customer.	All

Symptom List:

LOSS OF IGNITION RUN ONLY
ORC RUN ONLY DRIVER OPEN
ORC RUN ONLY DRIVER OVER CURRENT
ORC RUN ONLY DRIVER OVER TEMP
ORC RUN ONLY DRIVER OVER VOLT
ORC RUN ONLY DRIVER SHORT TO GROUND

Test Note: All symptoms listed above are diagnosed using the same tests. The title for the tests will be LOSS OF IGNITION RUN ONLY.

When Monitored and Set Condition:

LOSS OF IGNITION RUN ONLY

When Monitored: With the ignition in the run only position the ORC monitors the ORC Run Only Driver circuit for proper system voltage.

Set Condition: If the voltage on the ORC Run Only Driver circuit drops below 4.5 volts, the code will set.

ORC RUN ONLY DRIVER OPEN

When Monitored: When the ignition is turned OFF, the microprocessor controlled transistor (high side driver) places a diagnostic voltage on the ORC Run Only circuit for 60 seconds. An open high side driver (HSD) circuit voltage is between 2.4 and 5.0 volts.

Set Condition: This code will set within 10 second, if the microprocessor senses 2.4 to 5.0 volts on the HSD. Note: the diagnostic voltage will only last for 60 seconds after the ignition is turned off.

ORC RUN ONLY DRIVER OVER CURRENT

When Monitored: The FCM uses a microprocessor controlled transistor (high side driver) to supply power to the ORC. The microprocessor monitors the high side driver (HSD) internal temperature when the ignition is in the Run position.

Set Condition: The code will set within 1 second, if the microprocessor senses high HSD internal temperature. The high temperature is caused by over current.

ORC RUN ONLY DRIVER OVER TEMP

When Monitored: When the ignition is turned OFF, the microprocessor controlled transistor (high side driver) places a diagnostic voltage on the ORC Run Only circuit for 60 seconds. An open high side driver (HSD) circuit voltage is between 2.4 and 5.0 volts.

Set Condition: This code will set within 10 second, if the microprocessor senses 2.4 to 5.0 volts on the HSD. Note: the diagnostic voltage will only last for 60 seconds after the ignition is turned off.

LOSS OF IGNITION RUN ONLY — Continued

ORC RUN ONLY DRIVER OVER VOLT

When Monitored: The FCM uses a microprocessor controlled transistor (high side driver) to supply power to the ORC. The microprocessor monitors the high side driver (HSD) battery voltage when the ignition is in the Run position.

Set Condition: The code will set if the microprocessor senses HSD battery voltage is over 30 volts.

ORC RUN ONLY DRIVER SHORT TO GROUND

When Monitored: The FCM uses a microprocessor controlled transistor (high side driver) to supply power to the ORC. The microprocessor monitors the high side driver (HSD) circuit for short to ground when the ignition is in the Run position.

Set Condition: The code will set within 1 second, if the microprocessor senses high HSD internal temperature. The high temperature is caused by short to ground.

POSSIBLE CAUSES
ACM, LOSS OF IGNITION RUN ONLY
ACM, ORC RUN ONLY CIRCUIT OPEN
FCM, ORC RUN ONLY CIRCUIT OPEN
IPM, ORC RUN ONLY CIRCUIT OPEN
ORC RUN ONLY DRIVER CIRCUIT OPEN
FCM, ORC RUN ONLY CIRCUIT SHORT
IPM, ORC RUN ONLY CIRCUIT SHORT
ACM, ORC RUN ONLY CIRCUIT SHORT
ORC RUN ONLY CIRCUIT SHORT
HIGH BATTERY VOLTAGE
ORC RUN ONLY OVER VOLTAGE
STORED CODE OR INTERMITTENT CONDITION
ACTIVE CODE PRESENT

LOSS OF IGNITION RUN ONLY — Continued

TEST	ACTION	APPLICABILITY
1	Ensure the battery is fully charged. Turn the ignition on. **NOTE: For the purpose of this test, the AECM and ORC modules will be referred to as an ACM.** SELECT ONE: ACM - ACTIVE DTC Go To 2 ACM - STORED DTC Go To 12 FCM - ACTIVE DTC Go To 4 FCM - STORED DTC Go To 12 **NOTE: When reconnecting Airbag system components, the ignition must be turned off and the battery must be disconnected.**	All
2	With the DRBIII®, read the active FCM DTCs. Are there any active ORC RUN ONLY DRIVER codes? Yes → Go To 4 No → Go To 3	All
3	**WARNING: IF THE AIRBAG CONTROL MODULE IS DROPPED AT ANY TIME, IT MUST BE REPLACED. FAILURE TO TAKE THE PROPER PRECAUTIONS COULD RESULT IN ACCIDENTAL AIRBAG DEPLOYMENT AND PERSONAL INJURY OR DEATH.** **WARNING: TO AVOID PERSONAL INJURY OR DEATH, TURN THE IGNITION OFF, DISCONNECT THE BATTERY AND WAIT TWO MINUTES BEFORE PROCEEDING.** If there are no possible causes remaining, view repair. Repair Replace the Airbag Control Module in accordance with Service Instructions. Perform __AIRBAG VERIFICATION TEST - VER 1.	All
4	Select the active FCM RUN ONLY DTC displayed on the DRB. 1. ORC RUN ONLY DRIVER OPEN Go To 5 2. ORC RUN ONLY DRIVER OVER VOLTAGE Go To 8 3. ORC RUN-START SHORT TO GROUND Go To 9 4. ORC RUN ONLY DRIVER OVER CURRENT Go To 9 5. ORC RUN ONLY DRIVER OVER TEMP Go To 9	All

LOSS OF IGNITION RUN ONLY — Continued

TEST	ACTION	APPLICABILITY
5	**WARNING: TO AVOID PERSONAL INJURY OR DEATH, TURN THE IGNITION OFF, DISCONNECT THE BATTERY AND WAIT TWO MINUTES BEFORE PROCEEDING.** **WARNING: IF THE OCCUPANT RESTRAINT CONTROLLER IS DROPPED AT ANY TIME, IT MUST BE REPLACED. FAILURE TO TAKE THE PROPER PRECAUTIONS COULD RESULT IN ACCIDENTAL AIRBAG DEPLOYMENT AND PERSONAL INJURY OR DEATH.** Disconnect the Airbag Control Module connector(s). **NOTE: Check connectors - Clean and repair as necessary.** Connect the appropriate Load Tool Adaptor to the Airbag Control Module connector. Connect a test light to ground and the ORC Run Only Driver circuit at the Airbag Control Module connector. **WARNING: TO AVOID PERSONAL INJURY OR DEATH, TURN THE IGNITION ON, THEN RECONNECT THE BATTERY.** Turn the ignition off, wait 90 seconds and then turn the ignition ON. With the DRBIII®, read the active FCM DTCs. Does the DRB show an active ORC RUN ONLY DRIVER OPEN code? Yes → Go To 6 No → Replace the Airbag Control Module in accordance with Service Instructions. Perform __AIRBAG VERIFICATION TEST - VER 1.	All
6	**WARNING: TO AVOID PERSONAL INJURY OR DEATH, TURN THE IGNITION OFF, DISCONNECT THE BATTERY AND WAIT TWO MINUTES BEFORE PROCEEDING.** Disconnect the Front Control Module. **NOTE: Check connectors - Clean and repair as necessary.** Measure the resistance of the ORC Run - Start Driver circuit between the Front Control Module connector and the Airbag Control Module adapter. Is the resistance below 1.0 ohms? Yes → Replace the Front Control Module. Perform __AIRBAG VERIFICATION TEST - VER 1. No → Go To 7	All
7	Gain access to the connectors on the bottom of the IPM. Disconnect the IPM C7 connector. **NOTE: Check connectors - Clean and repair as necessary.** Measure the resistance of the ORC Run Only Driver circuit between the IPM C7 connector and the Airbag Control Module adapter. Is the resistance below 1.0 ohms? Yes → Replace the IPM. Perform __AIRBAG VERIFICATION TEST - VER 1. No → Repair the open ORC Run Only Driver circuit. Perform __AIRBAG VERIFICATION TEST - VER 1.	All
8	Measure the battery voltage. Is the voltage above 30.0 volts? Yes → Refer to engine symptomm list for the Battery Voltage Too High symptom. Perform __AIRBAG VERIFICATION TEST - VER 1. No → Replace the Front Control Module. Perform __AIRBAG VERIFICATION TEST - VER 1.	All

LOSS OF IGNITION RUN ONLY — Continued

TEST	ACTION	APPLICABILITY
9	Disconnect the Front Control Module. Measure the resistance of the ORC Run Only Driver circuit between the Front Control Module connector and ground. Is the resistance below 500K ohms? Yes → Go To 10 No → Replace the Front Control Module. Perform __AIRBAG VERIFICATION TEST - VER 1.	All
10	Gain access to the connectors on the bottom of the IPM. Disconnect the IPM C7 connector. **NOTE: Check connectors - Clean and repair as necessary.** Measure the resistance of the ORC Run Only Driver circuit between the IPM C7 connector and ground. Is the resistance below 500K ohms? Yes → Go To 11 No → Replace the IPM. Perform __AIRBAG VERIFICATION TEST - VER 1.	All
11	Disconnect the Airbag Control Module connector(s). **WARNING: TO AVOID PERSONAL INJURY OR DEATH, IF THE OCCUPANT RESTRAINT CONTROLLER IS DROPPED AT ANY TIME, IT MUST BE REPLACED.** **NOTE: Check connectors - Clean and repair as necessary.** Connect the appropriate Load Tool Adaptor to the Airbag Control Module connector. Measure the resistance of the ORC Run Only Driver circuit between the IPM C7 connector and ground. Is the resistance below 500K ohms? Yes → Repair the ORC Run Only Driver circuit shorted to ground. Perform __AIRBAG VERIFICATION TEST - VER 1. No → Replace the Airbag Control Module in accordance with Service Instructions. Perform __AIRBAG VERIFICATION TEST - VER 1.	All

LOSS OF IGNITION RUN ONLY — Continued

TEST	ACTION	APPLICABILITY
12	With the DRBIII®, record and erase all DTC's from all Airbag modules. If equipped with Passenger Airbag On - Off switch, read the DTC's in all switch positions. If any ACTIVE codes are present they must be resolved before diagnosing any stored codes. **WARNING: TO AVOID PERSONAL INJURY OR DEATH, TURN THE IGNITION OFF, DISCONNECT THE BATTERY AND WAIT TWO MINUTES BEFORE PROCEEDING.** Using the wiring diagram/schematic as a guide, inspect the wiring and connectors. Look for chaffed, pierced, pinched, or partially broken wires and broken, bent, pushed out, spread, corroded, or contaminated terminals. The following additional checks may assist you in identifying a possible intermittent problem. Reconnect any disconnected components and harness connector. **WARNING: TO AVOID PERSONAL INJURY OR DEATH, TURN THE IGNITION ON, THEN RECONNECT THE BATTERY.** With the DRBIII® monitor active codes as you work through the following steps. **WARNING: TO AVOID PERSONAL INJURY OR DEATH, MAINTAIN A SAFE DISTANCE FROM ALL AIRBAGS WHILE PERFORMING THE FOLLOWING STEPS.** Wiggle the wiring harness and connectors of the related airbag circuit or component. If codes are related to the Driver Airbag circuits, rotate the steering wheel from stop to stop. IF only stored codes return continue the test until the problem area has been isolated In the previous steps you have attempted to recreate the conditions responsible for setting active DTC in question. Are any ACTIVE DTCs present? Yes → Select appropriate symptom from Symptom List. No → No problem found at this time. Erase all codes before returning vehicle to customer.	All

Symptom:
NO CLUSTER MESSAGE

When Monitored and Set Condition:

NO CLUSTER MESSAGE

When Monitored: With ignition on, the ACM monitors the PCI Bus for a message from the MIC containing the airbag warning indicator status. The MIC transmits the message one time at ignition on, lamp state change, or in response to the ACM message.

Set Condition: If the MIC message is not received for 10 consecutive seconds, the code will set.

POSSIBLE CAUSES
MIC, COMMUNICATION FAILURE
ACM, NO CLUSTER MESSAGES
STORED CODE OR INTERMITTENT CONDITION
ACTIVE CODE PRESENT

TEST	ACTION	APPLICABILITY
1	Turn the ignition on. **NOTE: Ensure the battery is fully charged.** **NOTE: For the purpose of this test, the AECM and ORC modules will be referred to as an ACM.** SELECT ACTIVE or STORED DTC: ACM - ACTIVE DTC Go To 2 ACM - STORED DTC Go To 4 **NOTE: When reconnecting Airbag system components, the ignition must be turned off and the battery must be disconnected.**	All
2	Turn the ignition on. With the DRBIII®, ensure PCI Bus communications with the Instrument Cluster. Is the Instrument Cluster communicating on the PCI Bus? Yes → Go To 3 No → Refer to category COMMUNICATION CATEGORY and select the related symptom NO RESPONSE or INSTRUMENT CLUSTER BUS +/- SIGNAL OPEN. Perform __AIRBAG VERIFICATION TEST - VER 1.	All

NO CLUSTER MESSAGE — Continued

TEST	ACTION	APPLICABILITY
3	**WARNING: TO AVOID PERSONAL INJURY OR DEATH, TURN THE IGNITION OFF, TO AVOID PERSONAL INJURY OR DEATH, DISCONNECT THE BATTERY AND WAIT TWO MINUTES BEFORE PROCEEDING.** **WARNING: IF THE AIRBAG CONTROL MODULE IS DROPPED AT ANY TIME, IT MUST BE REPLACED. FAILURE TO TAKE THE PROPER PRECAUTIONS COULD RESULT IN ACCIDENTAL AIRBAG DEPLOYMENT AND PERSONAL INJURY OR DEATH.** If there are no possible causes remaining, view repair. Repair Replace the Airbag Control Module in accordance with Service Instructions. Perform __AIRBAG VERIFICATION TEST - VER 1. **NOTE: When reconnecting airbag system components the Ignition must be turned off and the Battery must be disconnected.**	All
4	With the DRBIII®, record and erase all DTC's from all Airbag modules. If equipped with Passenger Airbag On - Off switch, read the DTC's in all switch positions. If any ACTIVE codes are present they must be resolved before diagnosing any stored codes. **WARNING: TO AVOID PERSONAL INJURY OR DEATH, TURN THE IGNITION OFF, DISCONNECT THE BATTERY AND WAIT TWO MINUTES BEFORE PROCEEDING.** Using the wiring diagram/schematic as a guide, inspect the wiring and connectors. Look for chaffed, pierced, pinched, or partially broken wires and broken, bent, pushed out, spread, corroded, or contaminated terminals. The following additional checks may assist you in identifying a possible intermittent problem. Reconnect any disconnected components and harness connector. **WARNING: TO AVOID PERSONAL INJURY OR DEATH, TURN THE IGNITION ON, THEN RECONNECT THE BATTERY.** With the DRBIII® monitor active codes as you work through the following steps. **WARNING: TO AVOID PERSONAL INJURY OR DEATH, MAINTAIN A SAFE DISTANCE FROM ALL AIRBAGS WHILE PERFORMING THE FOLLOWING STEPS.** Wiggle the wiring harness and connectors of the related airbag circuit or component. If codes are related to the Driver Airbag circuits, rotate the steering wheel from stop to stop. IF only stored codes return continue the test until the problem area has been isolated In the previous steps you have attempted to recreate the conditions responsible for setting active DTC in question. Are any ACTIVE DTCs present? Yes → Select appropriate symptom from Symptom List. No → No problem found at this time. Erase all codes before returning vehicle to customer.	All

Symptom:
NO OCM MESSAGE

When Monitored and Set Condition:

NO OCM MESSAGE

When Monitored: At ignition on, the ACM monitors the PCI Bus for a PCI Bus message from the Occupant Classification Module.

Set Condition: The DTC will set if the ACM does not receive a valid OCM bus message, if expected by vehicle configuration.

POSSIBLE CAUSES
ACTIVE LOSS OF IGN RUN-START DTC
OCM, COMMUNICATION FAILURE
ACM, NO OCCUPANT CLASSIFICATION MODULE MESSAGES
STORED CODE OR INTERMITTENT CONDITION
ACTIVE CODE PRESENT

TEST	ACTION	APPLICABILITY
1	Turn the ignition on. **NOTE: Ensure the battery is fully charged.** **NOTE: For the purpose of this test, the AECM and ORC modules will be referred to as an ACM.** SELECT ACTIVE or STORED DTC: ACM - ACTIVE DTC Go To 2 ACM - STORED DTC Go To 5 **NOTE: When reconnecting Airbag system components, the ignition must be turned off and the battery must be disconnected.**	All
2	With the DRBIII®, read the active ACM DTCs.. Is the Run-Start trouble code active? Yes → Refer to symptom list for problems related to the Airbag Control Module. Then perform the symptom LOSS OF IGNITION RUN-START trouble code. No → Go To 3	All

NO OCM MESSAGE — Continued

TEST	ACTION	APPLICABILITY
3	Turn the ignition on. With the DRBIII®, ensure PCI Bus communications with the Occupant Classification Module. Is the Occupant Classification Module communicating on the PCI Bus? Yes → Go To 4 No → Refer to symptom list and select the related symptom NO RESPONSE FROM OCM or OCM BUS +/- SIGNAL OPEN. Perform OCS VERIFICATION TEST - VER 1.	All
4	**WARNING: TO AVOID PERSONAL INJURY OR DEATH, TURN THE IGNITION OFF, DISCONNECT THE BATTERY AND WAIT TWO MINUTES BEFORE PROCEEDING.** **WARNING: IF THE AIRBAG CONTROL MODULE IS DROPPED AT ANY TIME, IT MUST BE REPLACED. FAILURE TO TAKE THE PROPER PRECAUTIONS COULD RESULT IN ACCIDENTAL AIRBAG DEPLOYMENT AND PERSONAL INJURY OR DEATH.** If there are no possible causes remaining, view repair. Repair Replace the Airbag Control Module in accordance with Service Instructions. Perform __AIRBAG VERIFICATION TEST - VER 1. **NOTE: When reconnecting airbag system components the Ignition must be turned off and the Battery must be disconnected.**	All
5	With the DRBIII®, record and erase all DTC's from all Airbag modules. If equipped with Passenger Airbag On - Off switch, read the DTC's in all switch positions. If any ACTIVE codes are present they must be resolved before diagnosing any stored codes. **WARNING: TO AVOID PERSONAL INJURY OR DEATH, TURN THE IGNITION OFF, DISCONNECT THE BATTERY AND WAIT TWO MINUTES BEFORE PROCEEDING.** Using the wiring diagram/schematic as a guide, inspect the wiring and connectors. Look for chaffed, pierced, pinched, or partially broken wires and broken, bent, pushed out, spread, corroded, or contaminated terminals. The following additional checks may assist you in identifying a possible intermittent problem. Reconnect any disconnected components and harness connector. **WARNING: TO AVOID PERSONAL INJURY OR DEATH, TURN THE IGNITION ON, THEN RECONNECT THE BATTERY.** With the DRBIII® monitor active codes as you work through the following steps. Wiggle the wiring harness and connectors of the related airbag circuit or component. IF only stored codes return continue the test until the problem area has been isolated In the previous steps you have attempted to recreate the conditions responsible for setting active DTC in question. Are any ACTIVE DTCs present? Yes → Select appropriate symptom from Symptom List. No → No problem found at this time. Erase all codes before returning vehicle to customer.	All

Symptom:
NO ODOMETER MESSAGE

When Monitored and Set Condition:

NO ODOMETER MESSAGE

When Monitored: With ignition on, the ACM monitors the PCI Bus for the Odometer message from the Body Control Module. The PCM transmits the odometer message at 1 second intervals.

Set Condition: The code will set, if the ACM does not see the odometer message for 10 seconds.

POSSIBLE CAUSES
PCM, PCI COMMUNICATION FAILURE
NO ODOMETER MESSAGE
STORED CODE OR INTERMITTENT CONDITION
ACM, NO ODOMETER MESSAGE
ACTIVE CODE PRESENT

TEST	ACTION	APPLICABILITY
1	**NOTE: Ensure that the battery is fully charged.** **NOTE: For the purpose of this test, the AECM and ORC modules will be referred to as an ACM.** Turn the ignition on. SELECT ACTIVE or STORED DTC: ACM - ACTIVE DTC Go To 2 ACM - STORED DTC Go To 5 **NOTE: When reconnecting Airbag system components, the ignition must be turned off and the battery must be disconnected.**	All
2	Connect the DRBIII® to the data link connector and select PASSIVE RESTRAINTS, AIRBAG, SYSTEM TEST. With the DRBIII®, read the PCM Active on the Bus:. Does the DRB show PCM ACTIVE ON THE BUS? Yes → Go To 3 No → Refer to category ″ COMMUNICATION CATEGORY″ and select the related symptom. Perform __AIRBAG VERIFICATION TEST - VER 1.	All

NO ODOMETER MESSAGE — Continued

TEST	ACTION	APPLICABILITY
3	With the DRB select ENGINE, MISCELLANEOUS, SELECT MISC FUNCTION, and then CHECK VIN to read the Vehicle Identification Number in the Powertrain Control Module. Compare the VIN displayed on the DRB screen and the Vehicle VIN plate. Does the VIN plate and the PCM VIN match? Yes → Go To 4 No → Replace the Powertrain Control Module and program with the correct vehicle identification number. Perform __AIRBAG VERIFICATION TEST - VER 1.	All
4	**WARNING: TO AVOID PERSONAL INJURY OR DEATH, TURN THE IGNITION OFF, DISCONNECT THE BATTERY AND WAIT TWO MINUTES BEFORE PROCEEDING.** **WARNING: IF THE AIRBAG CONTROL MODULE IS DROPPED AT ANY TIME, IT MUST BE REPLACED. FAILURE TO TAKE THE PROPER PRECAUTIONS COULD RESULT IN ACCIDENTAL AIRBAG DEPLOYMENT AND PERSONAL INJURY OR DEATH.** If there are no possible causes remaining, view repair. Repair Replace the Airbag Control Module in accordance with Service Instructions. Perform __AIRBAG VERIFICATION TEST - VER 1. **NOTE: When reconnecting airbag system components the Ignition must be turned off and the Battery must be disconnected.**	All

NO ODOMETER MESSAGE — Continued

TEST	ACTION	APPLICABILITY
5	With the DRBIII®, record and erase all DTC's from all Airbag modules. If equipped with Passenger Airbag On - Off switch, read the DTC's in all switch positions. If any ACTIVE codes are present they must be resolved before diagnosing any stored codes. **WARNING: TO AVOID PERSONAL INJURY OR DEATH, TURN THE IGNITION OFF, DISCONNECT THE BATTERY AND WAIT TWO MINUTES BEFORE PROCEEDING.** Using the wiring diagram/schematic as a guide, inspect the wiring and connectors. Look for chaffed, pierced, pinched, or partially broken wires and broken, bent, pushed out, spread, corroded, or contaminated terminals. The following additional checks may assist you in identifying a possible intermittent problem. Reconnect any disconnected components and harness connector. **WARNING: TO AVOID PERSONAL INJURY OR DEATH, TURN THE IGNITION ON, THEN RECONNECT THE BATTERY.** With the DRBIII® monitor active codes as you work through the following steps. **WARNING: TO AVOID PERSONAL INJURY OR DEATH, MAINTAIN A SAFE DISTANCE FROM ALL AIRBAGS WHILE PERFORMING THE FOLLOWING STEPS.** Wiggle the wiring harness and connectors of the related airbag circuit or component. If codes are related to the Driver Airbag circuits, rotate the steering wheel from stop to stop. IF only stored codes return continue the test until the problem area has been isolated In the previous steps you have attempted to recreate the conditions responsible for setting active DTC in question. Are any ACTIVE DTCs present? Yes → Select appropriate symptom from Symptom List. No → No problem found at this time. Erase all codes before returning vehicle to customer.	All

Symptom:
NO ORC MESSAGE

When Monitored and Set Condition:

NO ORC MESSAGE

When Monitored: At ignition on, the OCM monitors the PCI Bus for a PCI Bus message from the Airbag Control Module.

Set Condition: The DTC will set if the OCM does not receive a valid ACM bus message within 3 consecutive seconds.

POSSIBLE CAUSES
ORC, COMMUNICATION FAILURE
OCM, NO ORC MESSAGES
STORED CODE OR INTERMITTENT CONDITION
ACTIVE CODE PRESENT
OCS - SERVICE REPLACEMENT KIT

TEST	ACTION	APPLICABILITY
1	Turn the ignition on. **NOTE: Ensure the battery is fully charged.** **NOTE: For the purpose of this test, the AECM and ORC modules will be referred to as an ACM.** SELECT ACTIVE or STORED DTC: OCM - ACTIVE DTC Go To 2 OCM - STORED DTC Go To 6 **NOTE: When reconnecting Airbag system components, the ignition must be turned off and the battery must be disconnected.**	All
2	With the DRBIII®, ensure PCI Bus communications with the Airbag Control Module. Is the Airbag Control Module communicating on the PCI Bus? Yes → Go To 3 No → Refer to symptom list and select the related symptom NO RESPONSE FROM OCM or OCM BUS +/- SIGNAL OPEN.	All

NO ORC MESSAGE — Continued

TEST	ACTION	APPLICABILITY
3	Inspect the passenger OCS wiring to determine if the Bladder and Cushion Service Kit has been installed. **NOTE: Check connectors - for tamper evident material.** Tamper evident material is installed onto the Kit harness to keep the kit components together in shipping and installation. **NOTE: The Bladder and Cushion Service Kit component are calibrated together and should not be disconnected.** If the OCM harness connector can be easily disconnected the OCS is original equipment. Is the passenger seat original equipment? Yes → Go To 4 No → Go To 5	All
4	**WARNING: TO AVOID PERSONAL INJURY OR DEATH, TURN THE IGNITION OFF, DISCONNECT THE BATTERY AND WAIT TWO MINUTES BEFORE PROCEEDING.** **WARNING: IF THE OCCUPANT CLASSIFICATION MODULE IS DROPPED AT ANY TIME, IT MUST BE REPLACED. FAILURE TO TAKE THE PROPER PRECAUTIONS COULD RESULT IN ACCIDENTAL AIRBAG DEPLOYMENT AND PERSONAL INJURY OR DEATH.** If there are no possible causes remaining, view repair. Repair Replace the Occupant Classification Module in accordance with Service Instructions. Perform __AIRBAG VERIFICATION TEST - VER 1. **NOTE: When reconnecting airbag system components the Ignition must be turned off and the Battery must be disconnected.**	All
5	**WARNING: TO AVOID PERSONAL INJURY OR DEATH, TURN THE IGNITION OFF, DISCONNECT THE BATTERY AND WAIT TWO MINUTES BEFORE PROCEEDING.** **WARNING: IF THE OCCUPANT CLASSIFICATION MODULE IS DROPPED AT ANY TIME, IT MUST BE REPLACED. FAILURE TO TAKE THE PROPER PRECAUTIONS COULD RESULT IN ACCIDENTAL AIRBAG DEPLOYMENT AND PERSONAL INJURY OR DEATH.** If there are no possible causes remaining, view repair. Repair: Replace the OCS Bladder Service Kit in accordance with service information. Then perform the Verification Required test to remove DTC created by the repair. Perform __AIRBAG VERIFICATION TEST - VER 1.	All

NO ORC MESSAGE — Continued

TEST	ACTION	APPLICABILITY
6	With the DRBIII®, record and erase all DTC's from all Airbag modules. If equipped with Passenger Airbag On - Off switch, read the DTC's in all switch positions. If any ACTIVE codes are present they must be resolved before diagnosing any stored codes. **WARNING: TO AVOID PERSONAL INJURY OR DEATH, TURN THE IGNITION OFF, DISCONNECT THE BATTERY AND WAIT TWO MINUTES BEFORE PROCEEDING.** Using the wiring diagram/schematic as a guide, inspect the wiring and connectors. Look for chaffed, pierced, pinched, or partially broken wires and broken, bent, pushed out, spread, corroded, or contaminated terminals. The following additional checks may assist you in identifying a possible intermittent problem. Reconnect any disconnected components and harness connector. **WARNING: TO AVOID PERSONAL INJURY OR DEATH, TURN THE IGNITION ON, THEN RECONNECT THE BATTERY.** With the DRBIII® monitor active codes as you work through the following steps. **WARNING: TO AVOID PERSONAL INJURY OR DEATH, MAINTAIN A SAFE DISTANCE FROM ALL AIRBAGS WHILE PERFORMING THE FOLLOWING STEPS.** Wiggle the wiring harness and connectors of the related airbag circuit or component. If codes are related to the Driver Airbag circuits, rotate the steering wheel from stop to stop. IF only stored codes return continue the test until the problem area has been isolated In the previous steps you have attempted to recreate the conditions responsible for setting active DTC in question. Are any ACTIVE DTCs present? Yes → Select appropriate symptom from Symptom List. No → No problem found at this time. Erase all codes before returning vehicle to customer.	All

Symptom List:

NO PCI LOOPBACK
PCI BUS SHORT TO BATTERY
PCI BUS SHORT TO GROUND

Test Note: All symptoms listed above are diagnosed using the same tests. The title for the tests will be NO PCI LOOPBACK.

When Monitored and Set Condition:

NO PCI LOOPBACK

When Monitored: With the ignition on and the module transmitting information on the BUS.

Set Condition: The code will set immediately if the onboard diagnostic cannot detect the module transmitting information on the BUS. NOTE: Any Bus Failure will may cause a stored code to set.

PCI BUS SHORT TO BATTERY

When Monitored: With the ignition on, the module performs internal tests on the PCI Communication Bus.

Set Condition: This DTC will set if the PCI Communication Bus input is shorted to vehicle power.

PCI BUS SHORT TO GROUND

When Monitored: With the ignition on, the module performs internal tests on the PCI Communication Bus.

Set Condition: This DTC will set if the PCI Communication Bus input is shorted to vehicle ground/chassis.

POSSIBLE CAUSES
CHECKING FOR VOLTAGE AT ACM
WIRING HARNESS INTERMITTENT
ACM, NO RESPONSE FROM
AIRBAG CONTROL MODULE - ACM
GROUND CIRCUIT OPEN
OCCUPANT CLASSIFICATION MODULE - OCM
OPEN PCI BUS CIRCUIT AT THE DATA LINK CONNECTOR (DLC)
PCI BUS CIRCUIT OPEN
PCI BUS CIRCUIT SHORTED TO VOLTAGE
MODULE SHORT TO VOLTAGE

NO PCI LOOPBACK — Continued

POSSIBLE CAUSES
PCI BUS CIRCUIT SHORTED TO GROUND
OCS - SERVICE REPLACEMENT KIT

TEST	ACTION	APPLICABILITY
1	Turn the ignition on. **NOTE: Ensure the battery is fully charged.** **NOTE: For the purpose of this test, the AECM and ORC modules will be referred to as an ACM.** From the list below, select the appropriate module and DTC type for this diagnostic trouble code. DETERMINE ACTIVE OR STORED DTC ACM - ACTIVE Go To 2 ACM - STORED Go To 6 OCM - ACTIVE DTC Go To 3 OCM -STORED DTC Go To 6 **NOTE: When reconnecting airbag system components the Ignition must be turned off and the Battery must be disconnected.**	All
2	**WARNING: TO AVOID PERSONAL INJURY OR DEATH, DISCONNECT THE BATTERY AND WAIT TWO MINUTES BEFORE PROCEEDING.** **WARNING: IF THE AIRBAG CONTROL MODULE IS DROPPED AT ANY TIME, IT MUST BE REPLACED. FAILURE TO TAKE THE PROPER PRE-CAUTIONS COULD RESULT IN ACCIDENTAL AIRBAG DEPLOYMENT AND PERSONAL INJURY OR DEATH.** If there are no possible causes remaining, view repair. Repair Replace the Airbag Control Module in accordance with Service Instructions. Perform __AIRBAG VERIFICATION TEST - VER 1.	All
3	Inspect the passenger OCS wiring to determine if the Bladder and Cushion Service Kit has been installed. **NOTE: Check connectors - for tamper evident material.** Tamper evident material is installed onto the Kit harness to keep the kit components together in shipping and installation. **NOTE: The Bladder and Cushion Service Kit component are calibrated together and should not be disconnected.** If the OCM harness connector can be easily disconnected the OCS is original equipment. Is it original equipment? Yes → Go To 4 No → Go To 5	All

NO PCI LOOPBACK — Continued

TEST	ACTION	APPLICABILITY
4	**WARNING: TO AVOID PERSONAL INJURY OR DEATH, DISCONNECT THE BATTERY AND WAIT TWO MINUTES BEFORE PROCEEDING.** **WARNING: IF THE OCCUPANT CLASSIFICATION MODULE IS DROPPED AT ANY TIME, IT MUST BE REPLACED. FAILURE TO TAKE THE PROPER PRECAUTIONS COULD RESULT IN ACCIDENTAL AIRBAG DEPLOYMENT AND PERSONAL INJURY OR DEATH.** If there are no possible causes remaining, view repair. Repair Replace the Occupant Classification Module in accordance with Service Instructions. Perform OCS VERIFICATION TEST - VER 1.	All
5	**WARNING: TO AVOID PERSONAL INJURY OR DEATH, TURN THE IGNITION OFF, DISCONNECT THE BATTERY AND WAIT TWO MINUTES BEFORE PROCEEDING.** **WARNING: IF THE OCCUPANT CLASSIFICATION MODULE IS DROPPED AT ANY TIME, IT MUST BE REPLACED. FAILURE TO TAKE THE PROPER PRECAUTIONS COULD RESULT IN ACCIDENTAL AIRBAG DEPLOYMENT AND PERSONAL INJURY OR DEATH.** If there are no possible causes remaining, view repair. Repair: Install or replace the OCS Bladder Service Kit in accordance with service information. Then perform the Verification Required test to remove DTC created by the repair. Perform OCS VERIFICATION TEST - VER 1.	All
6	**Note: Determine which modules this vehicle is equipped with before beginning.** **Note: When attempting to communicate with any of the modules on this vehicle, the DRB will display 1 of 2 different communication errors: a NO RESPONSE message or a BUS +/- SIGNALS OPEN message.** Turn the ignition on. Using the DRB, attempt to communicate with the following control modules: Airbag Control Module Occupant Classification Module - If equipped Front Control Module - If equipped Instrument Cluster Occupant Classification Module (If equipped) Was the DRBIII® able to communicate with one or more Module(s)? Yes → Go To 7 No → Go To 12	All
7	Turn the ignition off. **Note: Visually inspect the related wiring harness. Look for any chafed, pierced, pinched, or partially broken wires.** **Note: Visually inspect the related wire harness connectors. Look for broken, bent, pushed out, or corroded terminals.** **Note: If the DRB can not communicate with a single module, refer to the category list for the related symptom.** Were any problems found? Yes → Repair wiring harness/connectors as necessary. Perform __AIRBAG VERIFICATION TEST - VER 1. No → Go To 8	All

NO PCI LOOPBACK — Continued

TEST	ACTION	APPLICABILITY
8	Ensure that the battery is fully charged. **WARNING: TO AVOID PERSONAL INJURY OR DEATH, TURN THE IGNITION OFF, DISCONNECT THE BATTERY AND WAIT TWO MINUTES BEFORE PROCEEDING.** Disconnect the ACM harness connector. Connect the appropriate Load Tool ACM Adapter to the ACM connector. Turn the ignition on and then reconnect the Battery. Using a 12-volt test light connected to ground, probe the Fused Ignition Switch Output (Run) Circuit and the Fused Ignition Switch Output (Run/Start) Circuit at the ACM connector. NOTE: One open circuit will not cause a NO RESPONSE condition. Is the test light illuminated on both circuits? Yes → Go To 9 No → Repair the Fused Ignition Switch Output (Run) and Fused Ignition Switch Output Run-Start circuits for an open. Perform __AIRBAG VERIFICATION TEST - VER 1. **NOTE: When reconnecting airbag system components, the ignition must be turned off and the battery must be disconnected.**	All
9	**Ensure that the battery is fully charged.** **WARNING: TO AVOID PERSONAL INJURY OR DEATH, TURN THE IGNITION OFF, DISCONNECT THE BATTERY AND WAIT TWO MINUTES BEFORE PROCEEDING.** Disconnect the ACM harness connector. Connect the appropriate Load Tool ACM Adapter to the ACM connector. Using a 12-volt test light connected to 12-volts, probe the ground circuit. **NOTE: Make sure test light is connected to the Battery positive terminal.** Is the test light illuminated? Yes → Go To 10 No → Repair the Ground circuit for an open. Perform __AIRBAG VERIFICATION TEST - VER 1. **When reconnecting Airbag system components, the ignition must be turned off and the battery must be disconnected.**	All

NO PCI LOOPBACK — Continued

TEST	ACTION	APPLICABILITY
10	**NOTE: Ensure there is PCI bus communication with other modules. If not, refer to the PCI Bus Communication Failure symptom and repair as necessary.** **WARNING: TO AVOID PERSONAL INJURY OR DEATH, TURN THE IGNITION OFF, DISCONNECT THE BATTERY AND WAIT TWO MINUTES BEFORE PROCEEDING.** Disconnect the ACM harness connector. Connect the appropriate Load Tool ACM Adapter to the ACM connector. Turn the ignition on and then reconnect the Battery. Use Scope input cable CH7058, Cable to Probe adapter CH7062, and the red and black test probes. Connect the scope input cable to the channel one connector on the DRB. Attach the red and black leads and the cable to probe adapter to the scope input cable. With the DRBIII® select Pep Module Tools. Select lab scope. Select Live Data. Select 12 volt square wave. Press F2 for Scope. Press F2 and use the down arrow to set voltage range to 20 volts. Press F2 again when complete. Connect the Black lead to the chassis ground. Connect the Red lead to the PCI Bus circuit in the ACM connector. Observe the voltage display on the DRB Lab Scope. Does the voltage pulse from 0 to approximately 7.5 volts? Yes → Go To 11 No → Repair the PCI Bus circuit for an open. Perform __AIRBAG VERIFICATION TEST - VER 1.	All
11	**WARNING: TO AVOID PERSONAL INJURY OR DEATH, DISCONNECT THE BATTERY AND WAIT TWO MINUTES BEFORE PROCEEDING.** **WARNING: IF THE AIRBAG CONTROL MODULE IS DROPPED AT ANY TIME, IT MUST BE REPLACED. FAILURE TO TAKE THE PROPER PRECAUTIONS COULD RESULT IN ACCIDENTAL AIRBAG DEPLOYMENT AND PERSONAL INJURY OR DEATH.** If there are no possible causes remaining, view repair. Repair Replace the Airbag Control Module in accordance with Service Instructions. Perform __AIRBAG VERIFICATION TEST - VER 1.	All

NO PCI LOOPBACK — Continued

TEST	ACTION	APPLICABILITY
12	Turn the ignition off. Disconnect the PCM/ECM harness connector. Note: If equipped with NGC follow the caution below. **CAUTION: DO NOT PROBE THE PCM HARNESS CONNECTORS. PROBING THE PCM HARNESS CONNECTORS WILL DAMAGE THE PCM TERMINALS RESULTING IN POOR TERMINAL TO PIN CONNECTION. INSTALL MILLER SPECIAL TOOL #8815 TO PERFORM DIAGNOSIS.** Disconnect the DRB from the Data Link Connector (DLC). Disconnect the negative battery cable. Measure the resistance of the PCI Bus circuit between the Data Link Connector (DLC) and the PCM/ECM harness connector. Is the resistance below 5.0 ohms? Yes → Go To 13 No → Repair the PCI Bus circuit for an open. Note: DO not repair the OCS wiring. If OCS wiring problem is present, install or replace the OCS Service Repair Kit. Then perform the Verification Required test to remove DTC created by the repair. Perform __AIRBAG VERIFICATION TEST - VER 1.	All
13	**NOTE: Reconnect the PCM/ECM harness connector and the negative battery cable.** Turn the ignition on. Measure the voltage of the PCI Bus circuit at the Data Link Connector (DLC). Is the voltage above 7.0 volts? Yes → Go To 14 No → Test Complete.	All
14	Turn the ignition off. Using a voltmeter, connect one end to the PCI Bus circuit at the DLC, and the other end to ground. **Note: When performing the next step turn the ignition off (wait one minute) before disconnecting any module. When the module is disconnected turn the ignition on to check for a short to voltage.** Turn the ignition on. While monitoring the voltmeter, disconnect each module the vehicle is equipped with one at a time. Is the voltage steadily above 7.0 volts with all the modules disconnected? Yes → Repair the PCI Bus circuit for a short to voltage. Perform BODY VERIFICATION TEST - VER 1. No → Replace the module that when disconnected the short to voltage was eliminated. Perform BODY VERIFICATION TEST - VER 1.	All

Symptom:
NO PCI TRANSMISSION

When Monitored and Set Condition:

NO PCI TRANSMISSION

When Monitored: With the ignition on and the module transmitting information on the BUS.

Set Condition: The code will set immediately if the onboard diagnostic cannot detect the module transmitting information on the BUS. NOTE: Any Bus Failure will may cause a stored code to set.

POSSIBLE CAUSES
AIRBAG CONTROL MODULE - ACM
STORED CODE OR INTERMITTENT CONDITION
ACTIVE CODE PRESENT

TEST	ACTION	APPLICABILITY
1	Turn the ignition on. **NOTE: Ensure the battery is fully charged.** **NOTE: For the purpose of this test, the AECM and ORC modules will be referred to as an ACM.** From the list below, select the appropriate module and DTC type for the this diagnostic trouble code. DETERMINE ACTIVE OR STORED DTC ACM - ACTIVE Go To 2 ACM - STORED Go To 3 **NOTE: When reconnecting airbag system components the Ignition must be turned off and the Battery must be disconnected.**	All
2	**WARNING: TO AVOID PERSONAL INJURY OR DEATH, DISCONNECT THE BATTERY AND WAIT TWO MINUTES BEFORE PROCEEDING.** **WARNING: IF THE AIRBAG CONTROL MODULE IS DROPPED AT ANY TIME, IT MUST BE REPLACED. FAILURE TO TAKE THE PROPER PRE-CAUTIONS COULD RESULT IN ACCIDENTAL AIRBAG DEPLOYMENT AND PERSONAL INJURY OR DEATH.** If there are no possible causes remaining, view repair. Repair Replace the Airbag Control Module in accordance with Service Instructions. Perform __AIRBAG VERIFICATION TEST - VER 1.	All

NO PCI TRANSMISSION — Continued

TEST	ACTION	APPLICABILITY
3	With the DRBIII®, record and erase all DTC's from all Airbag modules. If equipped with Passenger Airbag On - Off switch, read the DTC's in all switch positions. If any ACTIVE codes are present they must be resolved before diagnosing any stored codes. **WARNING: TO AVOID PERSONAL INJURY OR DEATH, TURN THE IGNITION OFF, DISCONNECT THE BATTERY AND WAIT TWO MINUTES BEFORE PROCEEDING.** Using the wiring diagram/schematic as a guide, inspect the wiring and connectors. Look for chaffed, pierced, pinched, or partially broken wires and broken, bent, pushed out, spread, corroded, or contaminated terminals. The following additional checks may assist you in identifying a possible intermittent problem. Reconnect any disconnected components and harness connector. **WARNING: TO AVOID PERSONAL INJURY OR DEATH, TURN THE IGNITION ON, THEN RECONNECT THE BATTERY.** With the DRBIII® monitor active codes as you work through the following steps. **WARNING: TO AVOID PERSONAL INJURY OR DEATH, MAINTAIN A SAFE DISTANCE FROM ALL AIRBAGS WHILE PERFORMING THE FOLLOWING STEPS.** Wiggle the wiring harness and connectors of the related airbag circuit or component. If codes are related to the Driver Airbag circuits, rotate the steering wheel from stop to stop. IF only stored codes return continue the test until the problem area has been isolated In the previous steps you have attempted to recreate the conditions responsible for setting active DTC in question. Are any ACTIVE DTCs present? Yes → Select appropriate symptom from Symptom List. No → No problem found at this time. Erase all codes before returning vehicle to customer.	All

Symptom List:

NO RIGHT FRONT IMPACT SENSOR COMMUNICATION
RIGHT FRONT IMPACT SENSOR INTERNAL 1

Test Note: All symptoms listed above are diagnosed using the same tests. The title for the tests will be NO RIGHT FRONT IMPACT SENSOR COMMUNICATION.

When Monitored and Set Condition:

NO RIGHT FRONT IMPACT SENSOR COMMUNICATION

When Monitored: The ACM continuously communicates with the Right Front Impact Sensor over the sensor signal circuit. The sensor communication and onboard diagnostics are powered by the ACM signal.

Set Condition: The code will set, if the ACM and Right Front Sensor do not establish and maintain valid data communications.

RIGHT FRONT IMPACT SENSOR INTERNAL 1

When Monitored: The Right Front Impact sensors is equipped with onboard diagnostics to monitor the sensors internal circuits. If a problem is identified the sensor sends the Right Front Impact sensor internal 1 message to the ACM.

Set Condition: The code will set if the ACM receives an internal 1 message from the Right Front Impact Sensor.

POSSIBLE CAUSES
SIGNAL CIRCUIT SHORTED TO BATTERY
SIGNAL CIRCUIT SHORT TO GROUND
RIGHT FRONT SENSOR 1 CIRCUITS SHORTED TOGETHER
GROUND CIRCUIT OPEN
SIGNAL CIRCUIT OPEN
ACM, PASSENGER SIDE IMPACT SENSOR
REPAIR IS COMPLETE
STORED CODE OR INTERMITTENT CONDITION
ACTIVE CODE PRESENT

NO RIGHT FRONT IMPACT SENSOR COMMUNICATION — Continued

TEST	ACTION	APPLICABILITY
1	Turn the ignition on. **NOTE: Ensure the battery is fully charged.** **NOTE: For the purpose of this test, the AECM and ORC modules will be referred to as an ACM.** SELECT ACTIVE or STORED DTC: ACM - ACTIVE DTC Go To 2 ACM - STORED DTC Go To 9 **NOTE: When reconnecting Airbag system components, the ignition must be turned off and the battery must be disconnected.**	All
2	**WARNING: TO AVOID PERSONAL INJURY OR DEATH, TURN THE IGNITION OFF, DISCONNECT THE BATTERY AND WAIT TWO MINUTES BEFORE PROCEEDING.** Disconnect the Right Front Impact Sensor connector. Disconnect the Airbag Control Module connector. **WARNING: TO AVOID PERSONAL INJURY OR DEATH, TURN THE IGNITION ON, THEN RECONNECT THE BATTERY.** Measure the voltage of the right Front Impact Sensor Signal circuit and sensor ground at the Right Front Impact Sensor connector. Is there any voltage present? Yes → Repair the Right Front Impact Sensor 1 Signal circuit shorted to battery. Perform __AIRBAG VERIFICATION TEST - VER 1. No → Go To 3	All
3	**WARNING: TO AVOID PERSONAL INJURY OR DEATH, TURN IGNITION ON, THEN RECONNECT THE BATTERY.** Measure the resistance of the Right Front Impact Sensor Signal circuit between the Right Front Impact Sensor connector and ground. Is the resistance below 2.0L ohms? Yes → Repair the Right Front Sense signal circuit shorted for a short to ground. Perform __AIRBAG VERIFICATION TEST - VER 1. No → Go To 4	All
4	Measure the resistance between the Right Front Impact Sensor 1 Signal and Sensor Ground circuits at the Right Front Impact Sensor 1 connector. Is the resistance below 100K ohms? Yes → Repair the Right Front Impact Sensor circuits shorted together. Perform __AIRBAG VERIFICATION TEST - VER 1. No → Go To 5	All

NO RIGHT FRONT IMPACT SENSOR COMMUNICATION — Continued

TEST	ACTION	APPLICABILITY
5	Connect the appropriate Load Tool ACM Adaptor to the Airbag Control Module connector. Measure the resistance of the Right Front Impact Sensor 1 ground circuit between the Right Front Impact Sensor 1 connector and the Load Tool adaptor. Is the resistance below 1 ohm? Yes → Go To 6 No → Repair the Right Front Impact Sensor 1 ground circuit open or high resistance. Perform __AIRBAG VERIFICATION TEST - VER 1.	All
6	Measure the resistance of the Right Side Impact Sensor Signal circuit between the Right Side Impact Sensor connector and the Load Tool adaptor. Is the resistance below 1 ohm? Yes → Go To 7 No → Repair the Right Front Impact Sensor 1 signal circuit open or high resistance. Perform __AIRBAG VERIFICATION TEST - VER 1.	All
7	Replace the Right Front Impact Sensor 1. Reconnect the vehicle body harness to the impact sensor. Remove any special tools or jumper wires and reconnect all previously disconnected components - except the Battery. **WARNING: TO AVOID PERSONAL INJURY OR DEATH, TURN THE IGNITION ON, THEN RECONNECT THE BATTERY.** Connect the DRB to the Data Link Connector - use the most current software available. Use the DRB III and erase the stored codes in all airbag system modules. Turn the Ignition Off, and wait 15 seconds before turning the Ignition On. Wait one minute, and read active codes and if there are none present read the stored codes. DID the active Right Front Impact Sensor 1 DTC return? Yes → Go To 8 No → Repair is complete. Perform __AIRBAG VERIFICATION TEST - VER 1.	All
8	**WARNING: TO AVOID PERSONAL INJURY OR DEATH, TURN THE IGNITION OFF, DISCONNECT THE BATTERY AND WAIT TWO MINUTES BEFORE PROCEEDING.** **WARNING: IF THE AIRBAG CONTROL MODULE IS DROPPED AT ANY TIME, IT MUST BE REPLACED. FAILURE TO TAKE THE PROPER PRECAUTIONS COULD RESULT IN ACCIDENTAL AIRBAG DEPLOYMENT AND PERSONAL INJURY OR DEATH.** If there are no possible causes remaining, view repair. Repair Replace the Airbag Control Module in accordance with Service Instructions. Perform __AIRBAG VERIFICATION TEST - VER 1.	All

NO RIGHT FRONT IMPACT SENSOR COMMUNICATION — Continued

TEST	ACTION	APPLICABILITY
9	With the DRBIII®, record and erase all DTC's from all Airbag modules. If equipped with Passenger Airbag On - Off switch, read the DTC's in all switch positions. If any ACTIVE codes are present they must be resolved before diagnosing any stored codes. **WARNING: TO AVOID PERSONAL INJURY OR DEATH, TURN THE IGNITION OFF, DISCONNECT THE BATTERY AND WAIT TWO MINUTES BEFORE PROCEEDING.** Using the wiring diagram/schematic as a guide, inspect the wiring and connectors. Look for chaffed, pierced, pinched, or partially broken wires and broken, bent, pushed out, spread, corroded, or contaminated terminals. The following additional checks may assist you in identifying a possible intermittent problem. Reconnect any disconnected components and harness connector. **WARNING: TO AVOID PERSONAL INJURY OR DEATH, TURN THE IGNITION ON, THEN RECONNECT THE BATTERY.** With the DRBIII® monitor active codes as you work through the following steps. **WARNING: TO AVOID PERSONAL INJURY OR DEATH, MAINTAIN A SAFE DISTANCE FROM ALL AIRBAGS WHILE PERFORMING THE FOLLOWING STEPS.** Wiggle the wiring harness and connectors of the related airbag circuit or component. If codes are related to the Driver Airbag circuits, rotate the steering wheel from stop to stop. IF only stored codes return continue the test until the problem area has been isolated In the previous steps you have attempted to recreate the conditions responsible for setting active DTC in question. Are any ACTIVE DTCs present? Yes → Select appropriate symptom from Symptom List. No → No problem found at this time. Erase all codes before returning vehicle to customer.	All

Symptom List:

NO RIGHT SIDE IMPACT SENSOR 1 COMMUNICATION
RIGHT SIDE IMPACT SENSOR 1 INTERNAL 1

Test Note: All symptoms listed above are diagnosed using the same tests. The title for the tests will be NO RIGHT SIDE IMPACT SENSOR 1 COMMUNICATION.

When Monitored and Set Condition:

NO RIGHT SIDE IMPACT SENSOR 1 COMMUNICATION

When Monitored: The ACM continuously communicates with the Right Side Impact Sensor 1 over the sensor signal circuit. The sensor communication and onboard diagnostics are powered by the ACM signal.

Set Condition: The code will set, if the ACM and Right Side Impact Sensor 1 do not establish and maintain valid data communications.

RIGHT SIDE IMPACT SENSOR 1 INTERNAL 1

When Monitored: At ignition on, the Right Side Impact Sensor 1 is equipped with onboard diagnostics to monitor the sensors internal circuits. If a problem is identified the sensor sends the Right Side Impact Sensor 1 internal 1 message to the ACM.

Set Condition: The code will set, if the ACM receives an Impact Sensor Internal 1 message from the Right Side Impact Sensor 1.

POSSIBLE CAUSES
SIGNAL CIRCUIT SHORTED TO BATTERY
SIGNAL CIRCUIT SHORT TO GROUND
RIGHT SIDE SENSOR 1 CIRCUITS SHORTED TOGETHER
GROUND CIRCUIT OPEN
SIGNAL CIRCUIT OPEN
ACM, RIGHT SIDE IMPACT SENSOR 1
REPAIR IS COMPLETE
STORED CODE OR INTERMITTENT CONDITION
ACTIVE CODE PRESENT

NO RIGHT SIDE IMPACT SENSOR 1 COMMUNICATION — Continued

TEST	ACTION	APPLICABILITY
1	Turn the ignition on. **NOTE: Ensure the battery is fully charged.** **NOTE: For the purpose of this test, the AECM and ORC modules will be referred to as an ACM.** SELECT ACTIVE or STORED DTC: ACM - ACTIVE DTC Go To 2 ACM - STORED DTC Go To 9 **NOTE: When reconnecting Airbag system components, the ignition must be turned off and the battery must be disconnected.**	All
2	**WARNING: TO AVOID PERSONAL INJURY OR DEATH, TURN THE IGNITION OFF, DISCONNECT THE BATTERY AND WAIT TWO MINUTES BEFORE PROCEEDING.** Disconnect the Right Side Impact Sensor 1 connector. Disconnect the Airbag Control Module connector. **WARNING: TO AVOID PERSONAL INJURY OR DEATH, TURN THE IGNITION ON, THEN RECONNECT THE BATTERY.** Measure the voltage of the Right Side Impact Sensor 1 Signal circuit and sensor 1 ground at the Right Side Impact Sensor 1 connector. Is there any voltage present? Yes → Repair the Right Side Impact Sensor 1 Signal circuit shorted to battery. Perform __AIRBAG VERIFICATION TEST - VER 1. No → Go To 3	All
3	**WARNING: TO AVOID PERSONAL INJURY OR DEATH, TURN IGNITION ON, THEN RECONNECT THE BATTERY.** Measure the resistance of the Right Side Impact Sensor 1 Signal circuit between the Right Side Impact Sensor 1 connector and ground. Is the resistance below 100K ohms? Yes → Repair the Right Side Sense 1 Signal circuit shorted for a short to ground. Perform __AIRBAG VERIFICATION TEST - VER 1. No → Go To 4	All
4	Measure the resistance between the Right Side Impact Sensor 1 Signal and Sensor 1 Ground circuits at the Right Side Impact Sensor 1 connector. Is the resistance below 100K ohms? Yes → Repair the Right Side Impact Sensor 1 circuits shorted together. Perform __AIRBAG VERIFICATION TEST - VER 1. No → Go To 5	All

NO RIGHT SIDE IMPACT SENSOR 1 COMMUNICATION — Continued

TEST	ACTION	APPLICABILITY
5	Connect the appropriate Load Tool ACM Adaptor to the Airbag Control Module connector. Measure the resistance of the Right Side Impact Sensor 1 Ground circuit between the Right Side Impact Sensor 1 connector and the Load Tool adaptor. Is the resistance below 1 ohm? Yes → Go To 6 No → Repair the Right Side Front Impact Sensor 1 Ground circuit open or high resistance. Perform __AIRBAG VERIFICATION TEST - VER 1.	All
6	Measure the resistance of the Right Side Impact Sensor 1 Signal circuit between the Right Side Impact Sensor 1 connector and the Load Tool adaptor. Is the resistance below 1 ohm? Yes → Go To 7 No → Repair the Right Side Impact Sensor 1 Signal circuit open or high resistance. Perform __AIRBAG VERIFICATION TEST - VER 1.	All
7	Replace the Right Side Impact Sensor 1 . Reconnect the vehicle body harness to the impact sensor. Remove any special tools or jumper wires and reconnect all previously disconnected components - except the Battery. **WARNING: TO AVOID PERSONAL INJURY OR DEATH, TURN THE IGNITION ON, THEN RECONNECT THE BATTERY.** Connect the DRB to the Data Link Connector - use the most current software available. Use the DRB III and erase the stored codes in all airbag system modules. Turn the Ignition Off, and wait 15 seconds before turning the Ignition On. Wait one minute, and read active codes and if there are none present read the stored codes. DID the active Right Side Impact Sensor 1 DTC return? Yes → Go To 8 No → Repair is complete. Perform __AIRBAG VERIFICATION TEST - VER 1.	All
8	**WARNING: TO AVOID PERSONAL INJURY OR DEATH, TURN THE IGNITION OFF, DISCONNECT THE BATTERY AND WAIT TWO MINUTES BEFORE PROCEEDING.** **WARNING: IF THE AIRBAG CONTROL MODULE IS DROPPED AT ANY TIME, IT MUST BE REPLACED. FAILURE TO TAKE THE PROPER PRECAUTIONS COULD RESULT IN ACCIDENTAL AIRBAG DEPLOYMENT AND PERSONAL INJURY OR DEATH.** If there are no possible causes remaining, view repair. Repair Replace the Airbag Control Module in accordance with Service Instructions. Perform __AIRBAG VERIFICATION TEST - VER 1.	All

NO RIGHT SIDE IMPACT SENSOR 1 COMMUNICATION — Continued

TEST	ACTION	APPLICABILITY
9	With the DRBIII®, record and erase all DTC's from all Airbag modules. If equipped with Passenger Airbag On - Off switch, read the DTC's in all switch positions. If any ACTIVE codes are present they must be resolved before diagnosing any stored codes. **WARNING: TO AVOID PERSONAL INJURY OR DEATH, TURN THE IGNITION OFF, DISCONNECT THE BATTERY AND WAIT TWO MINUTES BEFORE PROCEEDING.** Using the wiring diagram/schematic as a guide, inspect the wiring and connectors. Look for chaffed, pierced, pinched, or partially broken wires and broken, bent, pushed out, spread, corroded, or contaminated terminals. The following additional checks may assist you in identifying a possible intermittent problem. Reconnect any disconnected components and harness connector. **WARNING: TO AVOID PERSONAL INJURY OR DEATH, TURN THE IGNITION ON, THEN RECONNECT THE BATTERY.** With the DRBIII® monitor active codes as you work through the following steps. **WARNING: TO AVOID PERSONAL INJURY OR DEATH, MAINTAIN A SAFE DISTANCE FROM ALL AIRBAGS WHILE PERFORMING THE FOLLOWING STEPS.** Wiggle the wiring harness and connectors of the related airbag circuit or component. If codes are related to the Driver Airbag circuits, rotate the steering wheel from stop to stop. IF only stored codes return continue the test until the problem area has been isolated In the previous steps you have attempted to recreate the conditions responsible for setting active DTC in question. Are any ACTIVE DTCs present? Yes → Select appropriate symptom from Symptom List. No → No problem found at this time. Erase all codes before returning vehicle to customer.	All

Symptom List:

NO RIGHT SIDE IMPACT SENSOR 2 COMMUNICATION
RIGHT SIDE IMPACT SENSOR 2 INTERNAL 1

Test Note: All symptoms listed above are diagnosed using the same tests. The title for the tests will be NO RIGHT SIDE IMPACT SENSOR 2 COMMUNICATION.

When Monitored and Set Condition:

NO RIGHT SIDE IMPACT SENSOR 2 COMMUNICATION

When Monitored: The ACM continuously communicates with the Right Side Impact Sensor 2 over the sensor signal circuit. The sensor communication and onboard diagnostics are powered by the ACM signal.

Set Condition: The code will set, if the ACM and Right Side Impact Sensor 2 do not establish and maintain valid data communications.

RIGHT SIDE IMPACT SENSOR 2 INTERNAL 1

When Monitored: At ignition on, the Right Side Impact Sensor 2 is equipped with onboard diagnostics to monitor the sensors internal circuits. If a problem is identified the sensor sends the Right Side Impact Sensor 1 internal 1 message to the ACM.

Set Condition: The code will set, if the ACM receives an Impact Sensor Internal 2 message from the Passenger Side Impact Sensor 1.

POSSIBLE CAUSES
SIGNAL CIRCUIT SHORTED TO BATTERY
SIGNAL CIRCUIT SHORT TO GROUND
RIGHT SIDE SENSOR 2 CIRCUITS SHORTED TOGETHER
GROUND CIRCUIT OPEN
SIGNAL CIRCUIT OPEN
ACM, RIGHT SIDE IMPACT SENSOR 2
REPAIR IS COMPLETE
STORED CODE OR INTERMITTENT CONDITION
ACTIVE CODE PRESENT

NO RIGHT SIDE IMPACT SENSOR 2 COMMUNICATION — Continued

TEST	ACTION	APPLICABILITY
1	Turn the ignition on. **NOTE: Ensure the battery is fully charged.** **NOTE: For the purpose of this test, the AECM and ORC modules will be referred to as an ACM.** SELECT ACTIVE or STORED DTC: ACM - ACTIVE DTC Go To 2 ACM - STORED DTC Go To 9 **NOTE: When reconnecting Airbag system components, the ignition must be turned off and the battery must be disconnected.**	All
2	**WARNING: TO AVOID PERSONAL INJURY OR DEATH, TURN THE IGNITION OFF, DISCONNECT THE BATTERY AND WAIT TWO MINUTES BEFORE PROCEEDING.** Disconnect the Right Side Impact Sensor 2 connector. Disconnect the Airbag Control Module connector. **WARNING: TO AVOID PERSONAL INJURY OR DEATH, TURN THE IGNITION ON, THEN RECONNECT THE BATTERY.** Measure the voltage of the Right Side Impact Sensor 2 Signal circuit and sensor 2 ground at the Right Side Impact Sensor 2 connector. Is there any voltage present? Yes → Repair the Right Side Impact Sensor 2 Signal circuit shorted to battery. Perform __AIRBAG VERIFICATION TEST - VER 1. No → Go To 3	All
3	**WARNING: TO AVOID PERSONAL INJURY OR DEATH, TO AVOID PERSONAL INJURY OR DEATH, TURN IGNITION ON, THEN RECONNECT THE BATTERY.** Measure the resistance of the Right Side Impact Sensor 2 Signal circuit between the Right Side Impact Sensor 2 connector and ground. Is the resistance below 100K ohms? Yes → Repair the Right Side Sense 2 Signal circuit shorted for a short to ground. Perform __AIRBAG VERIFICATION TEST - VER 1. No → Go To 4	All
4	Measure the resistance between the Right Side Impact Sensor 2 Signal and Sensor 2 Ground circuits at the Right Side Impact Sensor 2 connector. Is the resistance below 100K ohms? Yes → Repair the Right Side Impact Sensor 2 circuits shorted together. Perform __AIRBAG VERIFICATION TEST - VER 1. No → Go To 5	All

NO RIGHT SIDE IMPACT SENSOR 2 COMMUNICATION — Continued

TEST	ACTION	APPLICABILITY
5	Connect the appropriate Load Tool ACM Adaptor to the Airbag Control Module connector. Measure the resistance of the Right Side Impact Sensor 2 Ground circuit between the Right Side Impact Sensor 2 connector and the Load Tool adaptor. Is the resistance below 1 ohm? Yes → Go To 6 No → Repair the Right Side Impact Sensor 2 Ground circuit open or high resistance. Perform __AIRBAG VERIFICATION TEST - VER 1.	All
6	Measure the resistance of the Right Side Impact Sensor 2 Signal circuit between the Right Side Impact Sensor 2 connector and the Load Tool adaptor. Is the resistance below 1 ohm? Yes → Go To 7 No → Repair the Right Side Impact Sensor 2 Signal circuit open or high resistance. Perform __AIRBAG VERIFICATION TEST - VER 1.	All
7	Replace the Right Side Impact Sensor. Reconnect the vehicle body harness to the impact sensor. Remove any special tools or jumper wires and reconnect all previously disconnected components - except the Battery. **WARNING: TO AVOID PERSONAL INJURY OR DEATH, TURN THE IGNITION ON, THEN RECONNECT THE BATTERY.** Connect the DRB to the Data Link Connector - use the most current software available. Use the DRB III and erase the stored codes in all airbag system modules. Turn the Ignition Off, and wait 15 seconds before turning the Ignition On. Wait one minute, and read active codes and if there are none present read the stored codes. DID the active Right Side Impact Sensor 2 DTC return? Yes → Go To 8 No → Repair is complete. Perform __AIRBAG VERIFICATION TEST - VER 1.	All
8	**WARNING: TO AVOID PERSONAL INJURY OR DEATH, TURN THE IGNITION OFF, DISCONNECT THE BATTERY AND WAIT TWO MINUTES BEFORE PROCEEDING.** **WARNING: IF THE AIRBAG CONTROL MODULE IS DROPPED AT ANY TIME, IT MUST BE REPLACED. FAILURE TO TAKE THE PROPER PRECAUTIONS COULD RESULT IN ACCIDENTAL AIRBAG DEPLOYMENT AND PERSONAL INJURY OR DEATH.** If there are no possible causes remaining, view repair. Repair Replace the Airbag Control Module in accordance with Service Instructions. Perform __AIRBAG VERIFICATION TEST - VER 1.	All

NO RIGHT SIDE IMPACT SENSOR 2 COMMUNICATION — Continued

TEST	ACTION	APPLICABILITY
9	With the DRBIII®, record and erase all DTC's from all Airbag modules. If equipped with Passenger Airbag On - Off switch, read the DTC's in all switch positions. If any ACTIVE codes are present they must be resolved before diagnosing any stored codes. **WARNING: TO AVOID PERSONAL INJURY OR DEATH, TURN THE IGNITION OFF, DISCONNECT THE BATTERY AND WAIT TWO MINUTES BEFORE PROCEEDING.** Using the wiring diagram/schematic as a guide, inspect the wiring and connectors. Look for chaffed, pierced, pinched, or partially broken wires and broken, bent, pushed out, spread, corroded, or contaminated terminals. The following additional checks may assist you in identifying a possible intermittent problem. Reconnect any disconnected components and harness connector. **WARNING: TO AVOID PERSONAL INJURY OR DEATH, TURN THE IGNITION ON, THEN RECONNECT THE BATTERY.** With the DRBIII® monitor active codes as you work through the following steps. **WARNING: TO AVOID PERSONAL INJURY OR DEATH, MAINTAIN A SAFE DISTANCE FROM ALL AIRBAGS WHILE PERFORMING THE FOLLOWING STEPS.** Wiggle the wiring harness and connectors of the related airbag circuit or component. If codes are related to the Driver Airbag circuits, rotate the steering wheel from stop to stop. IF only stored codes return continue the test until the problem area has been isolated In the previous steps you have attempted to recreate the conditions responsible for setting active DTC in question. Are any ACTIVE DTCs present? Yes → Select appropriate symptom from Symptom List. No → No problem found at this time. Erase all codes before returning vehicle to customer.	All

Symptom List:

NO RIGHT SIDE IMPACT SENSOR 3 COMMUNICATION
RIGHT SIDE IMPACT SENSOR 3 INTERNAL 1

Test Note: All symptoms listed above are diagnosed using the same tests. The title for the tests will be NO RIGHT SIDE IMPACT SENSOR 3 COMMUNICATION.

When Monitored and Set Condition:

NO RIGHT SIDE IMPACT SENSOR 3 COMMUNICATION

When Monitored: The ACM continuously communicates with the Right Side Impact Sensor 3 over the sensor signal circuit. The sensor communication and onboard diagnostics are powered by the ACM signal.

Set Condition: The code will set, if the ACM and Right Side Impact Sensor 3 do not establish and maintain valid data communications.

RIGHT SIDE IMPACT SENSOR 3 INTERNAL 1

When Monitored: At ignition on, the Right Side Impact Sensor 3 is equipped with onboard diagnostics to monitor the sensors internal circuits. If a problem is identified the sensor sends the Right Side Impact Sensor 1 internal 1 message to the ACM.

Set Condition: The code will set, if the ACM receives an Impact Sensor Internal 3 message from the Right Side Impact Sensor 1.

POSSIBLE CAUSES
SIGNAL CIRCUIT SHORTED TO BATTERY
SIGNAL CIRCUIT SHORT TO GROUND
RIGHT SIDE SENSOR 3 CIRCUITS SHORTED TOGETHER
GROUND CIRCUIT OPEN
SIGNAL CIRCUIT OPEN
ACM, RIGHT SIDE IMPACT SENSOR 3
REPAIR IS COMPLETE
STORED CODE OR INTERMITTENT CONDITION
ACTIVE CODE PRESENT

NO RIGHT SIDE IMPACT SENSOR 3 COMMUNICATION — Continued

TEST	ACTION	APPLICABILITY
1	Turn the ignition on. **NOTE: Ensure the battery is fully charged.** **NOTE: For the purpose of this test, the AECM and ORC modules will be referred to as an ACM.** SELECT ACTIVE or STORED DTC: ACM - ACTIVE DTC Go To 2 ACM - STORED DTC Go To 9 **NOTE: When reconnecting Airbag system components, the ignition must be turned off and the battery must be disconnected.**	All
2	**WARNING: TO AVOID PERSONAL INJURY OR DEATH, TURN THE IGNITION OFF, DISCONNECT THE BATTERY AND WAIT TWO MINUTES BEFORE PROCEEDING.** Disconnect the Right Side Impact Sensor 3 connector. Disconnect the Airbag Control Module connector. **WARNING: TO AVOID PERSONAL INJURY OR DEATH, TURN THE IGNITION ON, THEN RECONNECT THE BATTERY.** Measure the voltage of the Right Side Impact Sensor 3 Signal circuit and sensor 3 ground circuit at the Right Side Sensor 3 connector and ground. Is there any voltage present? Yes → Repair the Right Side Impact Sensor 3 circuits shorted to battery. Perform __AIRBAG VERIFICATION TEST - VER 1. No → Go To 3	All
3	**WARNING: TO AVOID PERSONAL INJURY OR DEATH, TURN IGNITION ON, THEN RECONNECT THE BATTERY.** Measure the resistance of the Right Side Impact Sensor 3 Signal circuit between the Right Side Impact Sensor 3 connector and ground. Is the resistance below 100K ohms? Yes → Repair the Right Side Impact Sense 3 signal circuit shorted for a short to ground. Perform __AIRBAG VERIFICATION TEST - VER 1. No → Go To 4	All
4	Measure the resistance between the Right Side Impact Sensor 3 Signal and Sensor 3 Ground circuits at the Right Side Impact Sensor 3 connector. Is the resistance below 100K ohms? Yes → Repair the Right Side Impact Sensor 3 circuits shorted together. Perform __AIRBAG VERIFICATION TEST - VER 1. No → Go To 5	All

NO RIGHT SIDE IMPACT SENSOR 3 COMMUNICATION — Continued

TEST	ACTION	APPLICABILITY
5	Connect the appropriate Load Tool ACM Adaptor to the Airbag Control Module connector. Measure the resistance of the Right Side Impact Sensor 3 Ground circuit between the Right Side Impact Sensor 3 connector and the Load Tool ACM Adaptor. Is the resistance below 1 ohm? Yes → Go To 6 No → Repair the Right Side Impact Sensor 3 Ground circuit open or high resistance. Perform __AIRBAG VERIFICATION TEST - VER 1.	All
6	Measure the resistance of the Right Side Impact Sensor 3 Signal circuit between the Right Side Impact Sensor 3 connector and the Load Tool ACM Adaptor. Is the resistance below 1 ohm? Yes → Go To 7 No → Repair the Right Side Impact Sensor 3 Signal circuit open or high resistance. Perform __AIRBAG VERIFICATION TEST - VER 1.	All
7	Replace the Right Side Impact Sensor 3. Reconnect the vehicle body harness to the impact sensor. Remove any special tools or jumper wires and reconnect all previously disconnected components - except the Battery. **WARNING: TO AVOID PERSONAL INJURY OR DEATH, TURN THE IGNITION ON, THEN RECONNECT THE BATTERY.** Connect the DRB to the Data Link Connector - use the most current software available. Use the DRB III and erase the stored codes in all airbag system modules. Turn the Ignition Off, and wait 15 seconds before turning the Ignition On. Wait one minute, and read active codes and if there are none present read the stored codes. DID the active Right Side Impact Sensor 3 DTC return? Yes → Go To 8 No → Test Complete.	All
8	**WARNING: TO AVOID PERSONAL INJURY OR DEATH, TURN THE IGNITION OFF, DISCONNECT THE BATTERY AND WAIT TWO MINUTES BEFORE PROCEEDING.** **WARNING: IF THE AIRBAG CONTROL MODULE IS DROPPED AT ANY TIME, IT MUST BE REPLACED.** If there are no possible causes remaining, view repair. Repair: Replace the Airbag Control Module in accordance with Service Instructions. Perform __AIRBAG VERIFICATION TEST - VER 1.	All

NO RIGHT SIDE IMPACT SENSOR 3 COMMUNICATION — Continued

TEST	ACTION	APPLICABILITY
9	With the DRBIII®, record and erase all DTC's from all Airbag modules. If equipped with Passenger Airbag On - Off switch, read the DTC's in all switch positions. If any ACTIVE codes are present they must be resolved before diagnosing any stored codes. **WARNING: TO AVOID PERSONAL INJURY OR DEATH, TURN THE IGNITION OFF, DISCONNECT THE BATTERY AND WAIT TWO MINUTES BEFORE PROCEEDING.** Using the wiring diagram/schematic as a guide, inspect the wiring and connectors. Look for chaffed, pierced, pinched, or partially broken wires and broken, bent, pushed out, spread, corroded, or contaminated terminals. The following additional checks may assist you in identifying a possible intermittent problem. Reconnect any disconnected components and harness connector. **WARNING: TO AVOID PERSONAL INJURY OR DEATH, TURN THE IGNITION ON, THEN RECONNECT THE BATTERY.** With the DRBIII® monitor active codes as you work through the following steps. **WARNING: TO AVOID PERSONAL INJURY OR DEATH, MAINTAIN A SAFE DISTANCE FROM ALL AIRBAGS WHILE PERFORMING THE FOLLOWING STEPS.** Wiggle the wiring harness and connectors of the related airbag circuit or component. If codes are related to the Driver Airbag circuits, rotate the steering wheel from stop to stop. IF only stored codes return continue the test until the problem area has been isolated In the previous steps you have attempted to recreate the conditions responsible for setting active DTC in question. Are any ACTIVE DTCs present? Yes → Select appropriate symptom from Symptom List. No → No problem found at this time. Erase all codes before returning vehicle to customer.	All

Symptom:
OCCUPANT CLASSIFICATION MODULE DATA TRANSFER ERROR

When Monitored and Set Condition:

OCCUPANT CLASSIFICATION MODULE DATA TRANSFER ERROR

When Monitored: At ignition on, once the VIN is validated, the OCM sends seat calibration data to the ORC and ensures that the ORC received the information correctly.

Set Condition: This DTC will set if the OCM does not receive the data back correctly from the ORC.

POSSIBLE CAUSES
ORC, COMMUNICATION FAILURE
OCS - SERVICE REPLACEMENT KIT

TEST	ACTION	APPLICABILITY
1	Turn the ignition on. **NOTE: Ensure the battery is fully charged.** **NOTE: For the purpose of this test, the AECM and ORC modules will be referred to as an ACM.** **NOTE: Repair all of the other OCM active DTCs before attempt the repair.** **NOTE: Repair all of the other ACM active DTCs before attempt the repair.** SELECT ACTIVE or STORED DTC: ACM - ACTIVE DTC Go To 2 ACM - STORED DTC Test Complete. **NOTE: When reconnecting Airbag system components, the ignition must be turned off and the battery must be disconnected.**	All
2	With the DRBIII®, ensure PCI Bus communications with the Airbag Control Module. Is the Airbag Control Module communicating on the PCI Bus? Yes → Go To 3 No → Refer to symptom list and select the related symptom NO RESPONSE FROM OCM or OCM BUS +/- SIGNAL OPEN.	All

OCCUPANT CLASSIFICATION MODULE DATA TRANSFER ERROR — Continued

TEST	ACTION	APPLICABILITY
3	**WARNING: TO AVOID PERSONAL INJURY OR DEATH, TURN THE IGNITION OFF, DISCONNECT THE BATTERY AND WAIT TWO MINUTES BEFORE PROCEEDING.** **WARNING: IF THE OCCUPANT CLASSIFICATION MODULE IS DROPPED AT ANY TIME, IT MUST BE REPLACED. FAILURE TO TAKE THE PROPER PRECAUTIONS COULD RESULT IN ACCIDENTAL AIRBAG DEPLOYMENT AND PERSONAL INJURY OR DEATH.** If there are no possible causes remaining, view repair. Repair: Replace the OCS Bladder and Cushion Kit in accordance with service information. Then perform the Verification Required test to remove DTC created by the repair. Perform __AIRBAG VERIFICATION TEST - VER 1.	All

Symptom List:

OCCUPANT CLASSIFICATION UNDETERMINED
RE-ZERO INCOMPLETE
SEAT NOT CALIBRATED
SYSTEM VERIFICATION REQUIRED - OCSVR

Test Note: All symptoms listed above are diagnosed using the same tests. The title for the tests will be OCCUPANT CLASSIFICATION UNDETERMINED.

When Monitored and Set Condition:

OCCUPANT CLASSIFICATION UNDETERMINED

When Monitored: When the ignition is on, the ACM monitors the PCI Bus for an OCM status message containing the OCM information (DTC status, and classification). The status message is sent once each second or upon change in active DTCs (or classification).

Set Condition: Classification Undetermined DTC will set as a byproduct of other active DTC′s that affect Occupant Classification. The OCM classification will show in the DRB under OCM Input/Output will show the status as Classification 5.

RE-ZERO INCOMPLETE

When Monitored: With the ignition on, the module checks to see if the OCM has successfully completed the OCS Verification Required test including use of the 6 Year Old and 5th Percentile Female load form.

Set Condition: This DTC will set if the OCS Verification Required test was initiated and not successfully completed or when a service kit or new seat is installed.

SEAT NOT CALIBRATED

When Monitored: With the ignition on, the module determines if the OCM has successfully completed the OCS Verification Required test including use of the 6 Year Old and 5th Percentile Female load form and if the OCM is not calibrated.

Set Condition: This DTC will set if the OCS Verification Required test had failures or if the OCM is not calibrated.

SYSTEM VERIFICATION REQUIRED - OCSVR

When Monitored: At ignition on, the OCM monitors the PCI Bus for the ORC deployment message.

Set Condition: The code will set if the ORC reports an airbag deployment or if a complete seat or a Service Repair Kit.

OCCUPANT CLASSIFICATION UNDETERMINED — Continued

POSSIBLE CAUSES
AIRBAG DEPLOYMENT RECEIVED
OCSVR PRETEST CONDITIONS INCOMPLETE
OSCVR TEST
OCSVR TEST FAILED CONDITIONS
RETEST OCSVR
BLADDER REPAIR KIT
STORED CODE OR INTERMITTENT CONDITION
ACTIVE CODE PRESENT

TEST	ACTION	APPLICABILITY
1	Make sure the DRBIII® is loaded with the latest software. Turn the ignition on. **NOTE: Ensure the battery is fully charged.** **NOTE: For the purpose of this test, the AECM and ORC modules will be referred to as an ACM.** SELECT ACTIVE or STORED DTC: OCM - ACTIVE DTC Go To 2 OCM- STORED DTC Go To 8 **NOTE: When reconnecting Airbag system components, the ignition must be turned off and the battery must be disconnected.**	All
2	**NOTE: This DTC will be set if any front or side airbag has been deployed. Before performing this test, replace any deployed or damaged airbag system components in accordance with service information.** If the airbag system deployed any or all airbags, tensioners or curtains refer to the service information for a list of component that must be inspected or replaced. Any front airbag, side airbag or SBT deployed? Yes → Make sure the Front Passenger Seat Belt and Retractor Assembly and Belt Tension Sensor (BTS) have been replaced and the Belt Tension Sensor Verification test performed. Perform OCS VERIFICATION TEST - VER 1. No → Go To 3	All

OCCUPANT CLASSIFICATION UNDETERMINED — Continued

TEST	ACTION	APPLICABILITY
3	Do not continue this test with the following ACTIVE DTCs present. FLUID LEVEL TOO LOW WHILE EMPTY OCM - INTERNAL 1 DTC OCM DATA TRANSFER ERROR DTC PASSENGER PRESSURE SENSOR OPEN DTC PASSENGER PRESSURE SENSOR SHORT TO GROUND DTC PASSENGER PRESSURE SENSOR SHORT TO BATTERY DTC PASSENGER PRESSURE SENSOR SHORT TOGETHER DTC VEHICLE BODY STYLE MISMATCH VIN MISMATCH The special tool OCS Seat Weights MRL #9077 is required for phase 2 and 3 of this test. Make sure the front passenger seat is empty and the seat belt is fully retracted. Have all of the pretest Conditions been completed? Yes → Go To 4 No → Return to the symptom list and perform any active DTCs listed in the pretest. When all pretest conditions are meet, perform the Verification Required DTC test.	All
4	TEST CONDITIONS: 1. Make sure the front passenger seat is empty and the seat belt is retracted. 2. Turn the ignition off, wait 5 seconds, then turn the ignition on. 3. Make sure that all pretest conditions have been completed. 4. Make sure the vehicle interior and the passenger seat have been between TBD temperature and TBD temperature for TBD time. 5. After adding or removing weight to the seat, allow 30 seconds for the seat to stabilize, before continuing the test. With the DRBIII® in OCS SYSTEM TEST,select OCS Verification. **NOTE: Active DTCs will set in the OCM until this test shows ″The OCS has been Verified″.** Press any DRB key to start the Verification test. Select test results below: The OCS has been Verified The OCS has passed the Verification Required Test and the repair is complete. Perform OCS VERIFICATION TEST - VER 1. Test Failed - No EOL Calibration Go To 7 Test Failed - K Allow is FF Go To 7 Test Failed - K Empty Count is ″0″ Go To 7 Test Failed - All Others Go To 5	All

OCCUPANT CLASSIFICATION UNDETERMINED — Continued

TEST	ACTION	APPLICABILITY
5	FAILED TEST CONDITIONS: 1. Test Failed - Active DTCs Present 2. Test Failed - Temperature Out of Range 3. Test Failed - Seat Pressure Too High 4. Test Failed - Seat Pressure Too Low 5. Test Failed - Power Up Time Too Short 6. Test Failed - Power Up Time Too Long 7. Test Failed - Seat Pressure Not Stable 8. Test Failed - Seat is Empty 9. Test Failed - Weight Above Threshold 10. Test Failed - Weight Below Threshold 11. Test Failed - Seat Occupied **NOTE: Active DTCs have been set in the OCM until the test results shows "The OCS has been Verified".** Repair the OCSVR Test Failed conditions above before continuing. Is OCSVR Failed Test condition repaired? Yes → Go To 6 No → Correct any failed test conditions before performing the Verification required test again. NOTE: Additional DTCs have been set because of the failed OCSVR test.	All
6	CONTINUE VERIFICATION REQUIRED TEST: 1. After adding or removing weight to the seat, allow 30 seconds for the seat to stabilize, before continuing the test. 2. Make sure the vehicle interior and the passenger seat have been between 12.778°C (55°F) temperature and 35°C (95°F) temperature for 30 minutes. **NOTE: Active DTCs will set in the OCM until this test shows "The OCS has been Verified".** Press any DRB key to restart the Verification Required test. Select test results below: The OCS has been Verified The OCS has passed the Verification Required Test and the repair is complete. Perform OCS VERIFICATION TEST - VER 1. Test Failed Go To 7	All

OCCUPANT CLASSIFICATION UNDETERMINED — Continued

TEST	ACTION	APPLICABILITY
7	**WARNING: TO AVOID PERSONAL INJURY OR DEATH, TURN THE IGNITION OFF, DISCONNECT THE BATTERY AND WAIT TWO MINUTES BEFORE PROCEEDING.** **WARNING: IF THE OCCUPANT CLASSIFICATION MODULE IS DROPPED AT ANY TIME, IT MUST BE REPLACED. FAILURE TO TAKE THE PROPER PRECAUTIONS COULD RESULT IN ACCIDENTAL AIRBAG DEPLOYMENT AND PERSONAL INJURY OR DEATH.** **WARNING: TO AVOID PERSONAL INJURY OR DEATH ON VEHICLES EQUIPPED WITH THE OCCUPANT CLASSIFICATION SYSTEM (OCS), ONLY THE OCCUPANT CLASSIFICATION MODULE (OCM) AND THE PASSENGER SEAT BLADDER AND CUSHION SERVICE KIT ARE THE ONLY PARTS SERVICED.** **NOTE: the following repair will cause Active DTCs to be set in the OCM, perform the Verification Required test to remove DTCs created by this repair.** If there are no possible causes remaining, view repair. Repair: Install or replace the OCS Bladder Repair Kit in accordance with service information. Then perform the Verification Required test to remove DTC created by the repair. **NOTE: When reconnecting Airbag system components, the ignition must be turned off and the battery must be disconnected.**	All
8	With the DRBIII®, record and erase all DTC's from all Airbag modules. If equipped with Passenger Airbag On - Off switch, read the DTC's in all switch positions. If any ACTIVE codes are present they must be resolved before diagnosing any stored codes. **WARNING: TO AVOID PERSONAL INJURY OR DEATH, TURN THE IGNITION OFF, DISCONNECT THE BATTERY AND WAIT TWO MINUTES BEFORE PROCEEDING.** Using the wiring diagram/schematic as a guide, inspect the wiring and connectors. Look for chaffed, pierced, pinched, or partially broken wires and broken, bent, pushed out, spread, corroded, or contaminated terminals. The following additional checks may assist you in identifying a possible intermittent problem. Reconnect any disconnected components and harness connector. **WARNING: TO AVOID PERSONAL INJURY OR DEATH, TURN THE IGNITION ON, THEN RECONNECT THE BATTERY.** With the DRBIII® monitor active codes as you work through the following steps. Wiggle the wiring harness and connectors of the related airbag circuit or component. IF only stored codes return continue the test until the problem area has been isolated In the previous steps you have attempted to recreate the conditions responsible for setting active DTC in question. Are any ACTIVE DTCs present? Yes → Select appropriate symptom from Symptom List. No → No problem found at this time. Erase all codes before returning vehicle to customer.	All

Symptom:
OCM CONFIGURATION MISMATCH

When Monitored and Set Condition:

OCM CONFIGURATION MISMATCH

When Monitored: At Ignition on the Airbag Control Module monitors the PCI Bus messages for OCM PCI Bus messages and then compares the messages to the ACM configuration.

Set Condition: The DTC will be set if the ACM is not configured for PASSENGER ONLY OCM and the Occupant Classification Module messages are on PCI Bus.

POSSIBLE CAUSES
ACM NOT CONFIGURED FOR SIDE AIRBAGS
ACM, OCM CONFIGURATION
STORED CODE OR INTERMITTENT CONDITION
ACTIVE CODE PRESENT

TEST	ACTION	APPLICABILITY
1	Turn the ignition on. **NOTE: Ensure that the battery is fully charged.** **NOTE: For the purpose of this test, the AECM and ORC modules will be referred to as an ACM.** Select the appropriate module and DTC type combination: ACM - ACTIVE DTC Go To 2 ACM - STORED DTC Go To 5 **NOTE: When reconnecting Airbag system components, the ignition must be turned off and the battery must be disconnected.**	All
2	Inspect vehicle for a Occupant Classification System and Passenger On - Off Indicator. Is this vehicle equipped with a Occupant Classification System? Yes → Go To 3 No → Go To 4	All
3	With the DRBIII® read the VIN and ACM part number. Verify that the ACM is the correct part for this vehicle. Verify that the VIN matches this vehicle. Is this the correct ACM for this vehicle? Yes → Replace the Powertrain Control Module in accordance with the Service Information. Perform __AIRBAG VERIFICATION TEST - VER 1. No → Go To 4	All

OCM CONFIGURATION MISMATCH — Continued

TEST	ACTION	APPLICABILITY
4	**WARNING: TO AVOID PERSONAL INJURY OR DEATH, TURN THE IGNITION OFF, DISCONNECT THE BATTERY AND WAIT TWO MINUTES BEFORE PROCEEDING.** **WARNING: IF THE AIRBAG CONTROL MODULE IS DROPPED AT ANY TIME, IT MUST BE REPLACED. FAILURE TO TAKE THE PROPER PRECAUTIONS CAN RESULT IN ACCIDENTAL AIRBAG DEPLOYMENT AND PERSONAL INJURY OR DEATH.** If there are no possible causes remaining, view repair. Repair Replace the Airbag Control Module in accordance with Service Information. Perform __AIRBAG VERIFICATION TEST - VER 1. **NOTE: When reconnecting Airbag system components, the ignition must be turned off and the battery must be disconnected.**	All
5	With the DRBIII®, record and erase all DTC's from all Airbag modules. If equipped with Passenger Airbag On - Off switch, read the DTC's in all switch positions. If any ACTIVE codes are present they must be resolved before diagnosing any stored codes. **WARNING: TO AVOID PERSONAL INJURY OR DEATH, TURN THE IGNITION OFF, DISCONNECT THE BATTERY AND WAIT TWO MINUTES BEFORE PROCEEDING.** Using the wiring diagram/schematic as a guide, inspect the wiring and connectors. Look for chaffed, pierced, pinched, or partially broken wires and broken, bent, pushed out, spread, corroded, or contaminated terminals. The following additional checks may assist you in identifying a possible intermittent problem. Reconnect any disconnected components and harness connector. **WARNING: TO AVOID PERSONAL INJURY OR DEATH, TURN THE IGNITION ON, THEN RECONNECT THE BATTERY.** With the DRBIII® monitor active codes as you work through the following steps. **WARNING: TO AVOID PERSONAL INJURY OR DEATH, MAINTAIN A SAFE DISTANCE FROM ALL AIRBAGS WHILE PERFORMING THE FOLLOWING STEPS.** Wiggle the wiring harness and connectors of the related airbag circuit or component. If codes are related to the Driver Airbag circuits, rotate the steering wheel from stop to stop. IF only stored codes return continue the test until the problem area has been isolated In the previous steps you have attempted to recreate the conditions responsible for setting active DTC in question. Are any ACTIVE DTCs present? Yes → Select appropriate symptom from Symptom List. No → No problem found at this time. Erase all codes before returning vehicle to customer.	All

Symptom:

PASSENGER AIRBAG OFF INDICATOR CIRCUIT SHORT TO BATTERY

When Monitored and Set Condition:

PASSENGER AIRBAG OFF INDICATOR CIRCUIT SHORT TO BATTERY

When Monitored: When the ignition is on, the ACM monitors the PAB Indicator Driver circuit voltage from the PAB Off indicator circuit.

Set Condition: The code will set if the ACM senses a low resistance to battery voltage from PAB Indicator Driver circuit.

POSSIBLE CAUSES
SHORTED PAB OFF INDICATOR
PAB OFF INDICATOR CIRCUIT SHORT TO BATTERY
ACM, PASSENGER INDICATOR DRIVE CIRCUIT SHORTED TO BATTERY
STORED CODE OR INTERMITTENT CONDITION
ACTIVE CODE PRESENT

TEST	ACTION	APPLICABILITY
1	Turn the ignition on. **NOTE: Ensure that the battery is fully charged.** **NOTE: For the purpose of this test, the AECM and ORC modules will be referred to as an ACM.** SELECT ACTIVE or STORED DTC: ACM - ACTIVE DTC Go To 2 ACM - STORED DTC Go To 5 **NOTE: When reconnecting Airbag system components, the ignition must be turned off and the battery must be disconnected.**	All

PASSENGER AIRBAG OFF INDICATOR CIRCUIT SHORT TO BATTERY — Continued

TEST	ACTION	APPLICABILITY
2	**WARNING: TURN THE IGNITION OFF, DISCONNECT THE BATTERY AND WAIT TWO MINUTES BEFORE PROCEEDING.** Disconnect the Airbag Control Module connector(s). Disconnect the PAB Off Indicator connector. **WARNING: IF THE AIRBAG CONTROL MODULE IS DROPPED AT ANY TIME, IT MUST BE REPLACED. FAILURE TO TAKE THE PROPER PRECAUTIONS COULD RESULT IN ACCIDENTAL AIRBAG DEPLOYMENT AND PERSONAL INJURY OR DEATH.** **NOTE: Check connectors - Clean and repair as necessary.** Connect the appropriate Load Tool ACM Adaptor to the Airbag Control Module connector. **WARNING: TO AVOID PERSONAL INJURY OR DEATH, TURN THE IGNITION ON, THEN RECONNECT THE BATTERY.** Measure the voltage of the PAB Indicator Driver circuit between the ACM Adapter and ground. Is any voltage present? Yes → Repair the Passenger Off Indicator Driver circuit short to voltage. Perform __AIRBAG VERIFICATION TEST - VER 1. No → Go To 3	All
3	**WARNING: TURN THE IGNITION OFF, DISCONNECT THE BATTERY AND WAIT TWO MINUTES BEFORE PROCEEDING.** Reconnect the Airbag Control Module connector(s). **WARNING: TO AVOID PERSONAL INJURY OR DEATH, TURN THE IGNITION ON, THEN RECONNECT THE BATTERY.** With the DRBIII®, read the active ACM DTCs. Does the DRB show PAB OFF INDICATOR CIRCUIT OPEN? Yes → Replace the shorted Passenger Airbag Indicator in accordance with the Service Information. Perform __AIRBAG VERIFICATION TEST - VER 1. No → Go To 4	All
4	**WARNING: TO AVOID PERSONAL INJURY OR DEATH, TURN THE IGNITION OFF, DISCONNECT THE BATTERY AND WAIT TWO MINUTES BEFORE PROCEEDING.** **WARNING: IF THE AIRBAG CONTROL MODULE IS DROPPED AT ANY TIME, IT MUST BE REPLACED. FAILURE TO TAKE THE PROPER PRECAUTIONS COULD RESULT IN ACCIDENTAL AIRBAG DEPLOYMENT AND PERSONAL INJURY OR DEATH.** If there are no possible causes remaining, view repair. Repair: Replace the Airbag Control Module in accordance with the Service information. Perform __AIRBAG VERIFICATION TEST - VER 1.	All

PASSENGER AIRBAG OFF INDICATOR CIRCUIT SHORT TO BATTERY — Continued

TEST	ACTION	APPLICABILITY
5	With the DRBIII®, record and erase all DTC's from all Airbag modules. If equipped with Passenger Airbag On - Off switch, read the DTC's in all switch positions. If any ACTIVE codes are present they must be resolved before diagnosing any stored codes. **WARNING: TO AVOID PERSONAL INJURY OR DEATH, TURN THE IGNITION OFF, DISCONNECT THE BATTERY AND WAIT TWO MINUTES BEFORE PROCEEDING.** Using the wiring diagram/schematic as a guide, inspect the wiring and connectors. Look for chaffed, pierced, pinched, or partially broken wires and broken, bent, pushed out, spread, corroded, or contaminated terminals. The following additional checks may assist you in identifying a possible intermittent problem. Reconnect any disconnected components and harness connector. **WARNING: TO AVOID PERSONAL INJURY OR DEATH, TURN THE IGNITION ON, THEN RECONNECT THE BATTERY.** With the DRBIII® monitor active codes as you work through the following steps. **WARNING: TO AVOID PERSONAL INJURY OR DEATH, MAINTAIN A SAFE DISTANCE FROM ALL AIRBAGS WHILE PERFORMING THE FOLLOWING STEPS.** Wiggle the wiring harness and connectors of the related airbag circuit or component. If codes are related to the Driver Airbag circuits, rotate the steering wheel from stop to stop. IF only stored codes return continue the test until the problem area has been isolated In the previous steps you have attempted to recreate the conditions responsible for setting active DTC in question. Are any ACTIVE DTCs present? Yes → Select appropriate symptom from Symptom List. No → No problem found at this time. Erase all codes before returning vehicle to customer.	All

Symptom:

PASSENGER AIRBAG OFF INDICATOR CIRCUIT SHORT TO GROUND

When Monitored and Set Condition:

PASSENGER AIRBAG OFF INDICATOR CIRCUIT SHORT TO GROUND

When Monitored: When the ignition is on, the ACM monitors the PAB Indicator Driver circuit for voltage on the PAB Off indicator circuit.

Set Condition: The code will set if the ACM cannot detect voltage on the PAB Indicator Driver circuit.

POSSIBLE CAUSES
IGNITION SWITCH RUN - START CIRCUIT OPEN
FUSE OPEN
ACM, PAB OFF INDICATOR CIRCUIT SHORTED
FUSED RUN-START CIRCUIT SHORTED TO GROUND
PAB OFF INDICATOR DRIVER CIRCUIT SHORTED TO GROUND
PAB OFF INDICATOR INTERNAL SHORT
INDICATOR DISCONNECTED
FUSED IGNITION SWITCH OUTPUT RUN-START CIRCUIT OPEN
PASSENGER AIRBAG INDICATOR DRIVER CIRCUIT OPEN
PASSENGER ON - OFF INDICATOR OPEN
STORED CODE OR INTERMITTENT CONDITION
ACM, PASSENGER AIRBAG INDICATOR OPEN
ACTIVE CODE PRESENT

TEST	ACTION	APPLICABILITY
1	Turn the ignition on. **NOTE: Ensure the battery is fully charged.** **NOTE: For the purpose of this test, the AECM and ORC modules will be referred to as an ACM.** SELECT ACTIVE or STORED DTC: ACM - ACTIVE DTC Go To 2 ACM - STORED DTC Go To 13 **NOTE: When reconnecting Airbag system components, the ignition must be turned off and the battery must be disconnected.**	All

PASSENGER AIRBAG OFF INDICATOR CIRCUIT SHORT TO GROUND — Continued

TEST	ACTION	APPLICABILITY
2	Turn Ignition off. Remove and inspect the Indicator Run-Start Junction Block Fuse . **NOTE: Check connectors - Clean and repair as necessary.** Is the Fuse open? Yes → Go To 3 No → Go To 8	All
3	Turn the ignition on. Measure the voltage of the Ignition Switch Output circuit at the indicator Run - Start fuse. Is the voltage above approximately 6.0 volts? Yes → Go To 4 No → Repair the open Ignition Switch Output Run - Start circuit. Perform __AIRBAG VERIFICATION TEST - VER 1. **NOTE: Reinstall the fuse after performing this test.**	All
4	Turn the ignition off. Measure the resistance of the Fused Ignition Switch Output Run-Start circuit between the PAB Indicator Run - Start Fuse and ground. Is the resistance below 100 ohms? Yes → Go To 5 No → Replace PAB OFF Indicator Run - Start Fuse. Perform __AIRBAG VERIFICATION TEST - VER 1.	All
5	**WARNING: TO AVOID PERSONAL INJURY OR DEATH, TURN THE IGNITION OFF, DISCONNECT THE BATTERY AND WAIT TWO MINUTES BEFORE PROCEEDING.** Disconnect the Airbag Control Module connector **NOTE: Check connectors - Clean and repair as necessary.** Connect the appropriate Load Tool ACM Adaptor to the Airbag Control Module connector(s). **WARNING: IF THE AIRBAG CONTROL MODULE IS DROPPED AT ANY TIME, IT MUST BE REPLACED. FAILURE TO TAKE THE PROPER PRECAUTIONS COULD RESULT IN ACCIDENTAL AIRBAG DEPLOYMENT AND PERSONAL INJURY OR DEATH.** Measure the resistance of the Fused Ignition Switch Output Run-Start circuit between the PAB Indicator Run - Start Fuse and ground. Is the resistance below 100 ohms? Yes → Go To 6 No → Replace the Airbag Control Module in accordance with the Service Information. Perform __AIRBAG VERIFICATION TEST - VER 1.	All
6	Disconnect the Passenger Airbag On - Off Indicator connector. Measure the resistance of the Fused Ignition Switch Output Run-Start circuit between the PAB Indicator Run - Start Fuse and ground. Is the resistance below 100.0 ohms? Yes → Repair the Fused Ignition Switch Output Run-Start circuit shorted to ground and the Run-Start Indicator fuse. Perform __AIRBAG VERIFICATION TEST - VER 1. No → Go To 7	All

PASSENGER AIRBAG OFF INDICATOR CIRCUIT SHORT TO GROUND — Continued

TEST	ACTION	APPLICABILITY
7	Measure the resistance of the PAB OFF Indicator Driver circuit between the PAB Indicator connector and ground. Is the resistance below 100.0 ohms? Yes → Repair the Passenger Airbag Off Indicator Driver circuit short to ground. Perform __AIRBAG VERIFICATION TEST - VER 1. No → Replace the Passenger Off Indicator and the indicator run-start fuse. Perform __AIRBAG VERIFICATION TEST - VER 1.	All
8	Gain access to the Passenger Airbag On - Off Indicator connector. Is the Passenger Airbag Off Indicator connected to the dash harness? Yes → Go To 9 No → Connect the Passenger Airbag Off indicator to the dash harness connector. Perform __AIRBAG VERIFICATION TEST - VER 1.	All
9	Disconnect the PAB On-Off Indicator connector. **NOTE: Check connectors - Clean and repair as necessary.** Reinstall the previously removed Pab On-Off Indicator Run-Start Fuse. **WARNING: TO AVOID PERSONAL INJURY OR DEATH, TURN THE IGNITION ON, THEN RECONNECT THE BATTERY.** Measure the voltage of the Fused Ignition Switch Output Run-Start Circuit between the PAB On-Off Indicator connector ground. Is the voltage above 6.0 volts? Yes → Go To 10 No → Repair open Fused Ignition Switch Output Run-Start circuit. Perform __AIRBAG VERIFICATION TEST - VER 1.	All
10	**WARNING: TO AVOID PERSONAL INJURY OR DEATH, TURN THE IGNITION OFF, DISCONNECT THE BATTERY AND WAIT TWO MINUTES BEFORE PROCEEDING.** **WARNING: IF THE AIRBAG CONTROL MODULE IS DROPPED AT ANY TIME, IT MUST BE REPLACED. FAILURE TO TAKE THE PROPER PRECAUTIONS COULD RESULT IN ACCIDENTAL AIRBAG DEPLOYMENT AND PERSONAL INJURY OR DEATH.** Disconnect the Airbag Control Module connector **NOTE: Check connectors - Clean and repair as necessary.** Connect the appropriate Load Tool ACM Adaptor to the Airbag Control Module connector(s). Measure the resistance of the PAB Indicator Driver circuit between the ACM Adaptor and the PAB On - Off Switch connector. Is the resistance below 5.0 ohms? Yes → Go To 11 No → Repair the open Passenger Airbag Indicator Driver circuit. Perform __AIRBAG VERIFICATION TEST - VER 1.	All

PASSENGER AIRBAG OFF INDICATOR CIRCUIT SHORT TO GROUND — Continued

TEST	ACTION	APPLICABILITY
11	**WARNING: TO AVOID PERSONAL INJURY OR DEATH, TURN THE IGNITION OFF, DISCONNECT THE BATTERY AND WAIT TWO MINUTES BEFORE PROCEEDING.** Reconnect the PAB Indicator connector. **WARNING: IF THE AIRBAG CONTROL MODULE IS DROPPED AT ANY TIME, IT MUST BE REPLACED. FAILURE TO TAKE THE PROPER PRECAUTIONS COULD RESULT IN ACCIDENTAL AIRBAG DEPLOYMENT AND PERSONAL INJURY OR DEATH.** Connect a jumper wire between the ACM adaptor PAB Indicator Driver circuit and ground. turn ign on Does the PAB On-Off Indicator illuminate? Yes → Go To 12 No → Repair the open Passenger Airbag Indicator. Perform __AIRBAG VERIFICATION TEST - VER 1.	All
12	**WARNING: TO AVOID PERSONAL INJURY OR DEATH, TURN THE IGNITION OFF, DISCONNECT THE BATTERY AND WAIT TWO MINUTES BEFORE PROCEEDING.** **WARNING: IF THE AIRBAG CONTROL MODULE IS DROPPED AT ANY TIME, IT MUST BE REPLACED. FAILURE TO TAKE THE PROPER PRECAUTIONS CAN RESULT IN ACCIDENTAL AIRBAG DEPLOYMENT AND PERSONAL INJURY OR DEATH.** If there are no possible causes remaining, view repair. Repair Replace the Airbag Control Module in accordance with the Service Information. Perform __AIRBAG VERIFICATION TEST - VER 1. **NOTE: When reconnecting Airbag system components, the ignition must be turned off and the battery must be disconnected.**	All

PASSENGER AIRBAG OFF INDICATOR CIRCUIT SHORT TO GROUND — Continued

TEST	ACTION	APPLICABILITY
13	With the DRBIII®, record and erase all DTC's from all Airbag modules. If equipped with Passenger Airbag On - Off switch, read the DTC's in all switch positions. If any ACTIVE codes are present they must be resolved before diagnosing any stored codes. **WARNING: TO AVOID PERSONAL INJURY OR DEATH, TURN THE IGNITION OFF, DISCONNECT THE BATTERY AND WAIT TWO MINUTES BEFORE PROCEEDING.** Using the wiring diagram/schematic as a guide, inspect the wiring and connectors. Look for chaffed, pierced, pinched, or partially broken wires and broken, bent, pushed out, spread, corroded, or contaminated terminals. The following additional checks may assist you in identifying a possible intermittent problem. Reconnect any disconnected components and harness connector. **WARNING: TO AVOID PERSONAL INJURY OR DEATH, TURN THE IGNITION ON, THEN RECONNECT THE BATTERY.** With the DRBIII® monitor active codes as you work through the following steps. **WARNING: TO AVOID PERSONAL INJURY OR DEATH, MAINTAIN A SAFE DISTANCE FROM ALL AIRBAGS WHILE PERFORMING THE FOLLOWING STEPS.** Wiggle the wiring harness and connectors of the related airbag circuit or component. If codes are related to the Driver Airbag circuits, rotate the steering wheel from stop to stop. IF only stored codes return continue the test until the problem area has been isolated In the previous steps you have attempted to recreate the conditions responsible for setting active DTC in question. Are any ACTIVE DTCs present? Yes → Select appropriate symptom from Symptom List. No → No problem found at this time. Erase all codes before returning vehicle to customer.	All

Symptom List:

PASSENGER BTS OPEN
PASSENGER BTS SHORT TO BATTERY
PASSENGER BTS SHORT TO GROUND
PASSENGER BTS SHORT TOGETHER

Test Note: All symptoms listed above are diagnosed using the same tests. The title for the tests will be PASSENGER BTS OPEN.

When Monitored and Set Condition:

PASSENGER BTS OPEN

When Monitored: With the ignition on, the module monitors the Belt Tension Sensor signal.

Set Condition: This DTC will set if the BTS signal follows the reference voltage.

PASSENGER BTS SHORT TO BATTERY

When Monitored: With the ignition on, the module performs internal tests on the input signal from the BTS.

Set Condition: This DTC will set if the input signal from the BTS is greater than 233 A/D counts.

PASSENGER BTS SHORT TO GROUND

When Monitored: With the ignition on, the module performs internal tests on the input signal from the BTS.

Set Condition: This DTC will set if the input signal from the BTS is less than 13 A/D counts.

PASSENGER BTS SHORT TOGETHER

When Monitored: With the ignition on, the module performs internal tests on the input signal from the BTS.

Set Condition: This DTC will set if the module determines that any one of the three input lines to the BTS has the same value as another line. This fault will often be set with the BTS Short to Ground, BTS Short to Battery, and BTS Open faults.

POSSIBLE CAUSES
SENSOR SIGNAL AND GROUND SHORTED TOGETHER
BTS CONNECTOR DISCONNECTED
OCS BLADDER REPAIR KIT
STORED CODE OR INTERMITTENT CONDITION
ACTIVE CODE PRESENT

PASSENGER BTS OPEN — Continued

TEST	ACTION	APPLICABILITY
1	Turn the ignition on. **NOTE: Ensure the battery is fully charged.** **NOTE: For the purpose of this test, the AECM and ORC modules will be referred to as an ACM.** SELECT ACTIVE or STORED DTC: ACM - ACTIVE DTC Go To 2 ACM - STORED DTC Go To 8 **NOTE: When reconnecting Airbag system components, the ignition must be turned off and the battery must be disconnected.**	All
2	**WARNING: TO AVOID PERSONAL INJURY OR DEATH, TURN THE IGNITION OFF, DISCONNECT THE BATTERY AND WAIT TWO MINUTES BEFORE PROCEEDING.** Using the wiring diagram/schematic as a guide, inspect the wiring and connectors. Is the BTS disconnected? Yes → Go To 3 No → Go To 4	All
3	**WARNING: TO AVOID PERSONAL INJURY OR DEATH, TURN THE IGNITION OFF, DISCONNECT THE BATTERY AND WAIT TWO MINUTES BEFORE PROCEEDING.** If there are no possible causes remaining, view repair. Repair: Reconnect the BTS connector. Perform OCS VERIFICATION TEST - VER 1. **NOTE: When reconnecting Airbag system components, the ignition must be turned off and the battery must be disconnected.**	All
4	Disconnect the front passenger BTS connector. **NOTE: The following repair will cause Active DTCs to be set in the OCM, perform the Verification Required test to remove DTCs created by this repair.** Does the DRB report an active ″BTS OPEN DTC″ with no other active BTS DTCs? Yes → Go To 5 No → Go To 7	All
5	**WARNING: TO AVOID PERSONAL INJURY OR DEATH, TURN THE IGNITION OFF, DISCONNECT THE BATTERY AND WAIT TWO MINUTES BEFORE PROCEEDING.** Connect a jumper wire between the BTS Power circuit and Ground circuit at the seat harness BTS connector. **WARNING: TO AVOID PERSONAL INJURY OR DEATH, TURN IGNITION ON, THEN RECONNECT THE BATTERY.** With the DRBIII®, read the OCS active DTCs. Did DRB report Active BTS SHORTED DTCs change? Yes → Go To 6 No → Go To 7	All

PASSENGER BTS OPEN — Continued

TEST	ACTION	APPLICABILITY
6	**WARNING: TO AVOID PERSONAL INJURY OR DEATH, TURN THE IGNITION OFF, DISCONNECT THE BATTERY AND WAIT TWO MINUTES BEFORE PROCEEDING.** Connect a jumper wire between the BTS Signal circuit and ground circuit at the BTS connector. **WARNING: TO AVOID PERSONAL INJURY OR DEATH, TURN IGNITION ON, THEN RECONNECT THE BATTERY.** With the DRBIII®, read the OCS active DTCs. Did DRB display active BTS SHORTED TOGETHER DTCs? Yes → Replace the Front Passenger Seat Belt Retractor and BTS. Perform OCS VERIFICATION TEST - VER 1. No → Go To 7	All
7	**WARNING: TO AVOID PERSONAL INJURY OR DEATH, TURN THE IGNITION OFF, DISCONNECT THE BATTERY AND WAIT TWO MINUTES BEFORE PROCEEDING.** **WARNING: IF THE OCCUPANT CLASSIFICATION MODULE IS DROPPED AT ANY TIME, IT MUST BE REPLACED. FAILURE TO TAKE THE PROPER PRECAUTIONS COULD RESULT IN ACCIDENTAL AIRBAG DEPLOYMENT AND PERSONAL INJURY OR DEATH.** **WARNING: TO AVOID PERSONAL INJURY OR DEATH ON VEHICLES EQUIPPED WITH THE OCCUPANT CLASSIFICATION SYSTEM (OCS), ONLY THE OCCUPANT CLASSIFICATION MODULE (OCM) AND THE PASSENGER SEAT BLADDER AND CUSHION SERVICE KIT ARE THE ONLY PARTS SERVICED.** Follow all service information for replacing the Service Kit and performing the Verification Required test over again. **NOTE: the following repair will cause Active DTCs to be set in the OCM, perform the Verification Required test to remove DTCs created by this repair.** If there are no possible causes remaining, view repair. Repair: Replace the OCS Bladder Repair Kit in accordance with service information. Then perform the Verification Required test to remove DTC created by the repair. Perform OCS VERIFICATION TEST - VER 1. **NOTE: When reconnecting Airbag system components, the ignition must be turned off and the battery must be disconnected.**	All

PASSENGER BTS OPEN — Continued

TEST	ACTION	APPLICABILITY
8	With the DRBIII®, record and erase all DTC's from all Airbag modules. If equipped with Passenger Airbag On - Off switch, read the DTC's in all switch positions. If any ACTIVE codes are present they must be resolved before diagnosing any stored codes. **WARNING: TO AVOID PERSONAL INJURY OR DEATH, TURN THE IGNITION OFF, DISCONNECT THE BATTERY AND WAIT TWO MINUTES BEFORE PROCEEDING.** Using the wiring diagram/schematic as a guide, inspect the wiring and connectors. Look for chaffed, pierced, pinched, or partially broken wires and broken, bent, pushed out, spread, corroded, or contaminated terminals. The following additional checks may assist you in identifying a possible intermittent problem. Reconnect any disconnected components and harness connector. **WARNING: TO AVOID PERSONAL INJURY OR DEATH, TURN THE IGNITION ON, THEN RECONNECT THE BATTERY.** With the DRBIII® monitor active codes as you work through the following steps. Wiggle the wiring harness and connectors of the related airbag circuit or component. IF only stored codes return continue the test until the problem area has been isolated In the previous steps you have attempted to recreate the conditions responsible for setting active DTC in question. Are any ACTIVE DTCs present? Yes → Select appropriate symptom from Symptom List. No → No problem found at this time. Erase all codes before returning vehicle to customer.	All

Symptom List:

PASSENGER PRESSURE SENSOR OPEN
PASSENGER PRESSURE SENSOR SHORT GROUND
PASSENGER PRESSURE SENSOR SHORT TO BATTERY
PASSENGER PRESSURE SENSOR SHORT TOGETHER

Test Note: All symptoms listed above are diagnosed using the same tests. The title for the tests will be PASSENGER PRESSURE SENSOR OPEN.

When Monitored and Set Condition:

PASSENGER PRESSURE SENSOR OPEN

When Monitored: With ignition on, the module monitors the Pressure Sensor signal.

Set Condition: The DTC will set if the Pressure Sensor signal follows the reference voltage.

PASSENGER PRESSURE SENSOR SHORT GROUND

When Monitored: With the ignition on, the module performs internal tests on the input signal from the Pressure Sensor.

Set Condition: This DTC will set if the input signal from the Pressure Senor is more than 240 A/D counts for Pressure Sensor Stuck High or 249 A/D counts for Pressure Sensor Short to Ground.

PASSENGER PRESSURE SENSOR SHORT TO BATTERY

When Monitored: With the ignition on, the module performs internal tests on the input signal from the Pressure Sensor.

Set Condition: This DTC will set if the input signal from the Pressure Sensor is less than A/D counts.

PASSENGER PRESSURE SENSOR SHORT TOGETHER

When Monitored: With the ignition on, the module performs internal tests on the input signal from the Pressure Sensor.

Set Condition: This DTC will set if the module determines that any one of the three input lines to the Pressure Sensor has the same value as another line. This fault will often be set with the Short to Ground, Short to Battery, and Open faults DTCs.

POSSIBLE CAUSES
WIRING PROBLEM
OCS BLADDER REPAIR KIT
STORED CODE OR INTERMITTENT CONDITION
ACTIVE CODE PRESENT

PASSENGER PRESSURE SENSOR OPEN — Continued

TEST	ACTION	APPLICABILITY
1	Turn the ignition on. **NOTE: Ensure the battery is fully charged.** **NOTE: For the purpose of this test, the AECM and ORC modules will be referred to as an ACM.** SELECT ACTIVE or STORED DTC: ACM - ACTIVE DTC Go To 2 ACM - STORED DTC Go To 4 **NOTE: When reconnecting Airbag system components, the ignition must be turned off and the battery must be disconnected.**	All
2	**WARNING: TO AVOID PERSONAL INJURY OR DEATH, TURN THE IGNITION OFF, DISCONNECT THE BATTERY AND WAIT TWO MINUTES BEFORE PROCEEDING.** Using the wiring diagram/schematic as a guide, inspect the wiring and connectors. Is the Seat Weight Sensor disconnected? Yes → Connect the Passenger Seat Weight Sensor connector. Perform OCS VERIFICATION TEST - VER 1. No → Go To 3	All
3	**WARNING: TO AVOID PERSONAL INJURY OR DEATH, TURN THE IGNITION OFF, DISCONNECT THE BATTERY AND WAIT TWO MINUTES BEFORE PROCEEDING.** **WARNING: IF THE OCCUPANT CLASSIFICATION MODULE IS DROPPED AT ANY TIME, IT MUST BE REPLACED. FAILURE TO TAKE THE PROPER PRECAUTIONS COULD RESULT IN ACCIDENTAL AIRBAG DEPLOYMENT AND PERSONAL INJURY OR DEATH.** **WARNING: TO AVOID PERSONAL INJURY OR DEATH ON VEHICLES EQUIPPED WITH THE OCCUPANT CLASSIFICATION SYSTEM (OCS), ONLY THE OCCUPANT CLASSIFICATION MODULE (OCM) AND THE PASSENGER SEAT BLADDER AND CUSHION SERVICE KIT ARE THE ONLY PARTS SERVICED.** Follow all service information for replacing the Service Kit and performing the Verification Required test over again. **NOTE: the following repair will cause Active DTCs to be set in the OCM, perform the Verification Required test to remove DTCs created by this repair.** If there are no possible causes remaining, view repair. Repair: Replace the OCS Bladder Repair Kit in accordance with service information. Then perform the Verification Required test to remove DTC created by the repair. Perform OCS VERIFICATION TEST - VER 1. **NOTE: When reconnecting Airbag system components, the ignition must be turned off and the battery must be disconnected.**	All

PASSENGER PRESSURE SENSOR OPEN — Continued

TEST	ACTION	APPLICABILITY
4	With the DRBIII®, record and erase all DTC's from all Airbag modules. If equipped with Passenger Airbag On - Off switch, read the DTC's in all switch positions. If any ACTIVE codes are present they must be resolved before diagnosing any stored codes. **WARNING: TO AVOID PERSONAL INJURY OR DEATH, TURN THE IGNITION OFF, DISCONNECT THE BATTERY AND WAIT TWO MINUTES BEFORE PROCEEDING.** Using the wiring diagram/schematic as a guide, inspect the wiring and connectors. Look for chaffed, pierced, pinched, or partially broken wires and broken, bent, pushed out, spread, corroded, or contaminated terminals. The following additional checks may assist you in identifying a possible intermittent problem. Reconnect any disconnected components and harness connector. **WARNING: TO AVOID PERSONAL INJURY OR DEATH, TURN THE IGNITION ON, THEN RECONNECT THE BATTERY.** With the DRBIII® monitor active codes as you work through the following steps. Wiggle the wiring harness and connectors of the related airbag circuit or component. IF only stored codes return continue the test until the problem area has been isolated In the previous steps you have attempted to recreate the conditions responsible for setting active DTC in question. Are any ACTIVE DTCs present? Yes → Select appropriate symptom from Symptom List. No → No problem found at this time. Erase all codes before returning vehicle to customer.	All

Symptom:
PASSENGER SEAT BELT SWITCH CIRCUIT OPEN

When Monitored and Set Condition:

PASSENGER SEAT BELT SWITCH CIRCUIT OPEN

When Monitored: The ACM monitors the Seat Belt Buckle Switch circuit for an open condition.

Set Condition: The code will set if the ACM does not detect the correct circuit voltage.

POSSIBLE CAUSES
PASSENGER SBS OPEN
PASSENGER SEAT BELT SWITCH CIRCUITS OPEN
ACM, PASSENGER SEAT BELT SWITCH CIRCUIT OPEN
STORED CODE OR INTERMITTENT CONDITION
ACTIVE CODE PRESENT

TEST	ACTION	APPLICABILITY
1	Turn the ignition on. **NOTE: Ensure the battery is fully charged.** **NOTE: For the purpose of this test, the AECM and ORC modules will be referred to as an ACM.** SELECT ACTIVE or STORED DTC: ACM - ACTIVE DTC Go To 2 ACM - STORED DTC Go To 5 **NOTE: When reconnecting Airbag system components, the ignition must be turned off and the battery must be disconnected.**	All
2	Turn the ignition off. Disconnect the Passenger Seat Belt Switch. **NOTE: Check connectors - Clean and repair as necessary.** Turn the ignition on. Measure the voltage between Passenger Seat Belt Switch Line 1 and Line 2 circuits and ground. Is there voltage present on both circuits? Yes → Replace the Passenger Seat Belt Switch Buckle Assembly. Perform __AIRBAG VERIFICATION TEST - VER 1. No → Go To 3	All

PASSENGER SEAT BELT SWITCH CIRCUIT OPEN — Continued

TEST	ACTION	APPLICABILITY
3	**WARNING: TO AVOID PERSONAL INJURY OR DEATH, TURN IGNITION OFF, DISCONNECT THE BATTERY AND WAIT TWO MINUTES BEFORE PROCEEDING.** Disconnect the Airbag Control Module connector(s). **NOTE: Check connectors - Clean and repair as necessary.** Connect the appropriate Load Tool Adaptor to the Airbag Control Module connector. Measure the resistance of the Driver SBS Line 1 and line 2 circuits between the Passenger SBS harness connector and Airbag Load Tool Adaptor. Is the resistance below 1.0 ohms on both circuits? Yes → Go To 4 No → Repair the open Passenger Seat Belt Switch Line 1 or Line 2. Perform __AIRBAG VERIFICATION TEST - VER 1.	All
4	**WARNING: IF THE AIRBAG CONTROL MODULE IS DROPPED AT ANY TIME, IT MUST BE REPLACED. FAILURE TO TAKE THE PROPER PRECAUTIONS COULD RESULT IN ACCIDENTAL AIRBAG DEPLOYMENT AND PERSONAL INJURY OR DEATH.** If there are no possible causes remaining, view repair. Repair: Replace the Airbag Control Module in accordance with the Service information. Perform __AIRBAG VERIFICATION TEST - VER 1.	All
5	With the DRBIII®, record and erase all DTC's from all Airbag modules. If equipped with Passenger Airbag On - Off switch, read the DTC's in all switch positions. If any ACTIVE codes are present they must be resolved before diagnosing any stored codes. **WARNING: TO AVOID PERSONAL INJURY OR DEATH, TURN THE IGNITION OFF, DISCONNECT THE BATTERY AND WAIT TWO MINUTES BEFORE PROCEEDING.** Using the wiring diagram/schematic as a guide, inspect the wiring and connectors. Look for chaffed, pierced, pinched, or partially broken wires and broken, bent, pushed out, spread, corroded, or contaminated terminals. The following additional checks may assist you in identifying a possible intermittent problem. Reconnect any disconnected components and harness connector. **WARNING: TO AVOID PERSONAL INJURY OR DEATH, TURN THE IGNITION ON, THEN RECONNECT THE BATTERY.** With the DRBIII® monitor active codes as you work through the following steps. **WARNING: TO AVOID PERSONAL INJURY OR DEATH, MAINTAIN A SAFE DISTANCE FROM ALL AIRBAGS WHILE PERFORMING THE FOLLOWING STEPS.** Wiggle the wiring harness and connectors of the related airbag circuit or component. If codes are related to the Driver Airbag circuits, rotate the steering wheel from stop to stop. IF only stored codes return continue the test until the problem area has been isolated In the previous steps you have attempted to recreate the conditions responsible for setting active DTC in question. Are any ACTIVE DTCs present? Yes → Select appropriate symptom from Symptom List. No → No problem found at this time. Erase all codes before returning vehicle to customer.	All

Symptom:
PASSENGER SEAT BELT SWITCH SHORT TO BATTERY

When Monitored and Set Condition:

PASSENGER SEAT BELT SWITCH SHORT TO BATTERY

When Monitored: The ACM monitors the Seat Belt Buckle Switch circuit for an short to battery.

Set Condition: The code will set if the ACM detects high circuit voltage.

POSSIBLE CAUSES
PASSENGER SEAT BELT SWITCH CIRCUITS SHORTED TO BATTERY
PASSENGER SEAT BELT SWITCH SHORT TO BATTERY
ACM, PASSENGER SEAT BELT SWITCH SHORT TO BATTERY
STORED CODE OR INTERMITTENT CONDITION
ACTIVE CODE PRESENT

TEST	ACTION	APPLICABILITY
1	Turn the ignition on. **NOTE: Ensure the battery is fully charged.** **NOTE: For the purpose of this test, the AECM and ORC modules will be referred to as an ACM.** SELECT ACTIVE or STORED DTC: ACM - ACTIVE DTC Go To 2 ACM - STORED DTC Go To 5 **NOTE: When reconnecting Airbag system components, the ignition must be turned off and the battery must be disconnected.**	All
2	Turn the ignition off. **NOTE: Ensure the battery is fully charged.** Disconnect the Passenger Seat Belt Switch connector. **NOTE: Check connectors - Clean and repair as necessary.** Turn the ignition on. With the DRBIII®, read the active Airbag Control Module DTC's. Does the DRB show PASSENGER SBS CIRCUIT OPEN? Yes → Replace the Passenger Seat Belt Switch Buckle Assembly. Perform __AIRBAG VERIFICATION TEST - VER 1. No → Go To 3	All

PASSENGER SEAT BELT SWITCH SHORT TO BATTERY — Continued

TEST	ACTION	APPLICABILITY
3	**WARNING: TO AVOID PERSONAL INJURY OR DEATH, TURN IGNITION OFF, DISCONNECT THE BATTERY AND WAIT TWO MINUTES BEFORE PROCEEDING.** Disconnect the Airbag Control Module connector(s). **NOTE: Check connectors - Clean and repair as necessary.** **WARNING: IF THE AIRBAG CONTROL MODULE IS DROPPED AT ANY TIME, IT MUST BE REPLACED. FAILURE TO TAKE THE PROPER PRECAUTIONS COULD RESULT IN ACCIDENTAL AIRBAG DEPLOYMENT AND PERSONAL INJURY OR DEATH.** **WARNING: TO AVOID PERSONAL INJURY OR DEATH, TURN THE IGNITION ON, THEN RECONNECT THE BATTERY.** Measure the voltage on the Passenger SBS Line 1 and Line 2 circuits at the Passenger SBS connector. Is there any voltage present? Yes → Repair the Passenger Seat Belt Switch line 1 or line 2 shorted to battery. Perform __AIRBAG VERIFICATION TEST - VER 1. No → Go To 4	All
4	**WARNING: IF THE AIRBAG CONTROL MODULE IS DROPPED AT ANY TIME, IT MUST BE REPLACED. FAILURE TO TAKE THE PROPER PRECAUTIONS COULD RESULT IN ACCIDENTAL AIRBAG DEPLOYMENT AND PERSONAL INJURY OR DEATH.** If there are no possible causes remaining, view repair. Repair: Replace the Airbag Control Module in accordance with the Service information. Perform __AIRBAG VERIFICATION TEST - VER 1.	All

PASSENGER SEAT BELT SWITCH SHORT TO BATTERY — Continued

TEST	ACTION	APPLICABILITY
5	With the DRBIII®, record and erase all DTC's from all Airbag modules. If equipped with Passenger Airbag On - Off switch, read the DTC's in all switch positions. If any ACTIVE codes are present they must be resolved before diagnosing any stored codes. **WARNING: TO AVOID PERSONAL INJURY OR DEATH, TURN THE IGNITION OFF, DISCONNECT THE BATTERY AND WAIT TWO MINUTES BEFORE PROCEEDING.** Using the wiring diagram/schematic as a guide, inspect the wiring and connectors. Look for chaffed, pierced, pinched, or partially broken wires and broken, bent, pushed out, spread, corroded, or contaminated terminals. The following additional checks may assist you in identifying a possible intermittent problem. Reconnect any disconnected components and harness connector. **WARNING: TO AVOID PERSONAL INJURY OR DEATH, TURN THE IGNITION ON, THEN RECONNECT THE BATTERY.** With the DRBIII® monitor active codes as you work through the following steps. **WARNING: TO AVOID PERSONAL INJURY OR DEATH, MAINTAIN A SAFE DISTANCE FROM ALL AIRBAGS WHILE PERFORMING THE FOLLOWING STEPS.** Wiggle the wiring harness and connectors of the related airbag circuit or component. If codes are related to the Driver Airbag circuits, rotate the steering wheel from stop to stop. IF only stored codes return continue the test until the problem area has been isolated In the previous steps you have attempted to recreate the conditions responsible for setting active DTC in question. Are any ACTIVE DTCs present? Yes → Select appropriate symptom from Symptom List. No → No problem found at this time. Erase all codes before returning vehicle to customer.	All

Symptom:
PASSENGER SEAT BELT SWITCH SHORT TO GROUND

When Monitored and Set Condition:

PASSENGER SEAT BELT SWITCH SHORT TO GROUND

When Monitored: The ACM monitors the Seat Belt Buckle Switch circuit for a shorted together or shorted to ground condition.

Set Condition: The code will set if the ACM detects low circuit voltage.

POSSIBLE CAUSES
PASSENGER SEAT BELT SWITCH SHORT TOGETHER OR TO GROUND
PASSENGER SEAT BELT SWITCH CIRCUITS SHORTED TOGETHER
PASSENGER SEAT BELT SWITCH CIRCUITS SHORTED TO GROUND
ACM, PASSENGER SEAT BELT SWITCH SHORT TO GROUND
STORED CODE OR INTERMITTENT CONDITION
ACTIVE CODE PRESENT

TEST	ACTION	APPLICABILITY
1	TURN THE IGNITION ON. THIS IS A TEST. **NOTE: Ensure the battery is fully charged.** **NOTE: For the purpose of this test, the AECM and ORC modules will be referred to as an ACM.** SELECT ACTIVE or STORED DTC: ACM - ACTIVE DTC Go To 2 ACM - STORED DTC Go To 6 **NOTE: When reconnecting Airbag system components, the ignition must be turned off and the battery must be disconnected.**	All
2	Turn Ignition off. Disconnect the Passenger Seat Belt Switch connector. **NOTE: Check connectors - Clean and repair as necessary.** Turn Ignition on. With the DRBIII®, read the active Airbag Control Module DTC's. Does the DRB show PASSENGER SBS CIRCUIT OPEN? Yes → Replace the Passenger Seat Belt Switch Buckle Assembly. Perform __AIRBAG VERIFICATION TEST - VER 1. No → Go To 3	All

PASSENGER SEAT BELT SWITCH SHORT TO GROUND — Continued

TEST	ACTION	APPLICABILITY
3	**WARNING: TURN IGNITION OFF, DISCONNECT THE BATTERY AND WAIT TWO MINUTES BEFORE PROCEEDING.** Disconnect the Airbag Control Module connector(s). **NOTE: Check connectors - Clean and repair as necessary.** Measure the resistance between the Driver SBS Line 1 and line 2 circuit at the Passenger SBS connector. Is the resistance below 10K ohms? Yes → Repair the Passenger Seat Belt Switch Line 1 and Line 2 shorted together. Perform __AIRBAG VERIFICATION TEST - VER 1. No → Go To 4	All
4	**WARNING: TO AVOID PERSONAL INJURY OR DEATH, TURN IGNITION OFF, DISCONNECT THE BATTERY AND WAIT TWO MINUTES BEFORE PROCEEDING.** Disconnect the Airbag Control Module connector **NOTE: Check connectors - Clean and repair as necessary.** Measure the resistance of the Passenger SBS Line 1 and line 2 circuit between the Passenger SBS connector and ground. Is the resistance below 10K ohms on either circuit? Yes → Repair the Passenger Seat Belt Switch line 1 or line 2 shorted to ground. Perform __AIRBAG VERIFICATION TEST - VER 1. No → Go To 5	All
5	**WARNING: IF THE AIRBAG CONTROL MODULE IS DROPPED AT ANY TIME, IT MUST BE REPLACED. FAILURE TO TAKE THE PROPER PRECAUTIONS COULD RESULT IN ACCIDENTAL AIRBAG DEPLOYMENT AND PERSONAL INJURY OR DEATH.** If there are no possible causes remaining, view repair. Repair: Replace the Airbag Control Module in accordance with the Service information. Perform __AIRBAG VERIFICATION TEST - VER 1.	All

PASSENGER SEAT BELT SWITCH SHORT TO GROUND — Continued

TEST	ACTION	APPLICABILITY
6	With the DRBIII®, record and erase all DTC's from all Airbag modules. If equipped with Passenger Airbag On - Off switch, read the DTC's in all switch positions. If any ACTIVE codes are present they must be resolved before diagnosing any stored codes. **WARNING: TO AVOID PERSONAL INJURY OR DEATH, TURN THE IGNITION OFF, DISCONNECT THE BATTERY AND WAIT TWO MINUTES BEFORE PROCEEDING.** Using the wiring diagram/schematic as a guide, inspect the wiring and connectors. Look for chaffed, pierced, pinched, or partially broken wires and broken, bent, pushed out, spread, corroded, or contaminated terminals. The following additional checks may assist you in identifying a possible intermittent problem. Reconnect any disconnected components and harness connector. **WARNING: TO AVOID PERSONAL INJURY OR DEATH, TURN THE IGNITION ON, THEN RECONNECT THE BATTERY.** With the DRBIII® monitor active codes as you work through the following steps. **WARNING: TO AVOID PERSONAL INJURY OR DEATH, MAINTAIN A SAFE DISTANCE FROM ALL AIRBAGS WHILE PERFORMING THE FOLLOWING STEPS.** Wiggle the wiring harness and connectors of the related airbag circuit or component. If codes are related to the Driver Airbag circuits, rotate the steering wheel from stop to stop. IF only stored codes return continue the test until the problem area has been isolated In the previous steps you have attempted to recreate the conditions responsible for setting active DTC in question. Are any ACTIVE DTCs present? Yes → Select appropriate symptom from Symptom List. No → No problem found at this time. Erase all codes before returning vehicle to customer.	All

Symptom:
PASSENGER SEAT BELT SWITCH SHORT TOGETHER

When Monitored and Set Condition:

PASSENGER SEAT BELT SWITCH SHORT TOGETHER

When Monitored: With the ignition on the ACM monitors the Seat Belt Buckle Switch circuit for a shorted together.

Set Condition: The code will set if the ACM detects low circuit voltage.

POSSIBLE CAUSES
DRIVER SEAT BELT SWITCH SHORT TO GROUND
DRIVER SEAT BELT SWITCH CIRCUITS SHORT TO GROUND
ACM, DRIVER SEAT BELT SWITCH SHORT TO GROUND
STORED CODE OR INTERMITTENT CONDITION
ACTIVE CODE PRESENT

TEST	ACTION	APPLICABILITY
1	Turn the ignition on. **NOTE: Ensure the battery is fully charged.** **NOTE: For the purpose of this test, the AECM and ORC modules will be referred to as an ACM.** SELECT ACTIVE or STORED DTC: ACM - ACTIVE DTC Go To 2 ACM - STORED DTC Go To 5 **NOTE: When reconnecting Airbag system components, the ignition must be turned off and the battery must be disconnected.**	All
2	Turn Ignition off. Disconnect the Driver Seat Belt Switch connector(s). **NOTE: Check connectors - Clean and repair as necessary.** Turn Ignition on. With the DRBIII®, read the active Airbag Control Module DTC's. Does the DRB show DRIVER SEAT BELT CIRCUIT OPEN? Yes → Replace the Driver Seat Belt Switch Buckle Assembly. Perform __AIRBAG VERIFICATION TEST - VER 1. No → Go To 3	All

PASSENGER SEAT BELT SWITCH SHORT TOGETHER — Continued

TEST	ACTION	APPLICABILITY
3	Measure the resistance of the Driver SBS Line 1 and Line 2 circuits between the Driver SBS connector and ground. Is the resistance below 10K ohms on either circuit? Yes → Repair the Driver Seat Belt Switch line 1 or line 2 shorted to ground. Perform __AIRBAG VERIFICATION TEST - VER 1. No → Go To 4	All
4	**WARNING: IF THE AIRBAG CONTROL MODULE IS DROPPED AT ANY TIME, IT MUST BE REPLACED. FAILURE TO TAKE THE PROPER PRECAUTIONS COULD RESULT IN ACCIDENTAL AIRBAG DEPLOYMENT AND PERSONAL INJURY OR DEATH.** If there are no possible causes remaining, view repair. Repair: Replace the Airbag Control Module in accordance with the Service information. Perform __AIRBAG VERIFICATION TEST - VER 1.	All
5	With the DRBIII®, record and erase all DTC's from all Airbag modules. If equipped with Passenger Airbag On - Off switch, read the DTC's in all switch positions. If any ACTIVE codes are present they must be resolved before diagnosing any stored codes. **WARNING: TO AVOID PERSONAL INJURY OR DEATH, TURN THE IGNITION OFF, DISCONNECT THE BATTERY AND WAIT TWO MINUTES BEFORE PROCEEDING.** Using the wiring diagram/schematic as a guide, inspect the wiring and connectors. Look for chaffed, pierced, pinched, or partially broken wires and broken, bent, pushed out, spread, corroded, or contaminated terminals. The following additional checks may assist you in identifying a possible intermittent problem. Reconnect any disconnected components and harness connector. **WARNING: TO AVOID PERSONAL INJURY OR DEATH, TURN THE IGNITION ON, THEN RECONNECT THE BATTERY.** With the DRBIII® monitor active codes as you work through the following steps. **WARNING: TO AVOID PERSONAL INJURY OR DEATH, MAINTAIN A SAFE DISTANCE FROM ALL AIRBAGS WHILE PERFORMING THE FOLLOWING STEPS.** Wiggle the wiring harness and connectors of the related airbag circuit or component. If codes are related to the Driver Airbag circuits, rotate the steering wheel from stop to stop. IF only stored codes return continue the test until the problem area has been isolated In the previous steps you have attempted to recreate the conditions responsible for setting active DTC in question. Are any ACTIVE DTCs present? Yes → Select appropriate symptom from Symptom List. No → No problem found at this time. Erase all codes before returning vehicle to customer.	All

Symptom:
PASSENGER SEAT BELT TENSIONER CIRCUIT OPEN

When Monitored and Set Condition:

PASSENGER SEAT BELT TENSIONER CIRCUIT OPEN

When Monitored: With the ignition on, the ACM monitors the resistance of the Passenger Seat Belt Tensioner circuits.

Set Condition: When the ACM detects an open circuit or high resistance in the Passenger Seat Belt Tensioner circuits.

POSSIBLE CAUSES
PASSENGER SEAT BELT TENSIONER CIRCUIT OPEN
PASSENGER SEAT BELT TENSIONER LINE 1 OR LINE 2 CIRCUIT OPEN
ACM, PASSENGER SEAT BELT TENSIONER CIRCUIT OPEN
STORED CODE OR INTERMITTENT CONDITION
ACTIVE CODE PRESENT

TEST	ACTION	APPLICABILITY
1	Turn the ignition on. **NOTE: Ensure the battery is fully charged.** **NOTE: For the purpose of this test, the AECM and ORC modules will be referred to as an ACM.** SELECT ACTIVE or STORED DTC: ACM - ACTIVE DTC Go To 2 ACM - STORED DTC Go To 5 **NOTE: When reconnecting Airbag system components, the ignition must be turned off and the battery must be disconnected.**	All
2	**WARNING: TO AVOID PERSONAL INJURY OR DEATH, TURN IGNITION OFF, DISCONNECT THE BATTERY AND WAIT TWO MINUTES BEFORE PROCEEDING.** Disconnect the Passenger Seat Belt Tensioner connector. **NOTE: Check connectors - Clean and repair as necessary.** Connect the appropriate Load Tool to the Passenger Seat Belt Tensioner connector. **WARNING: TO AVOID PERSONAL INJURY OR DEATH, TURN IGNITION ON, THEN RECONNECT THE BATTERY.** With the DRBIII®, read the active Airbag Control Module DTC's. Does the DRBIII® display PASSENGER SBT CIRCUIT OPEN? Yes → Go To 3 No → Replace the Passenger Seat Belt Tensioner in accordance with the Service Information. Perform __AIRBAG VERIFICATION TEST - VER 1.	All

PASSENGER SEAT BELT TENSIONER CIRCUIT OPEN — Continued

TEST	ACTION	APPLICABILITY
3	**WARNING: TO AVOID PERSONAL INJURY OR DEATH, TURN IGNITION OFF, DISCONNECT THE BATTERY AND WAIT TWO MINUTES BEFORE PROCEEDING.** Disconnect the Load Tool from the Passenger SBT connector. Disconnect the Airbag control Module connector(s). **NOTE: Check connectors - Clean and repair as necessary.** Connect the appropriate Load Tool ACM Adaptor to the Airbag Control Module connector. Measure the resistance of the Passenger Seat Belt Tensioner Line 1 and Line 2 circuits between the Load Tool Adaptor and the Passenger SBT connector. Is the resistance below 1.0 ohms on either circuit ? Yes → Go To 4 No → Repair open or high resistance in Passenger Seat Belt Tensioner Line 1 or Line 2 circuits. Perform __AIRBAG VERIFICATION TEST - VER 1.	All
4	**WARNING: TO AVOID PERSONAL INJURY OR DEATH, TURN THE IGNITION OFF, DISCONNECT THE BATTERY AND WAIT TWO MINUTES BEFORE PROCEEDING.** **WARNING: IF THE AIRBAG CONTROL MODULE IS DROPPED AT ANY TIME, IT MUST BE REPLACED. FAILURE TO TAKE THE PROPER PRECAUTIONS COULD RESULT IN ACCIDENTAL AIRBAG DEPLOYMENT AND PERSONAL INJURY OR DEATH.** If there are no possible causes remaining, view repair. Repair: Replace the Airbag Control Module in accordance with the Service information. Perform __AIRBAG VERIFICATION TEST - VER 1.	All

PASSENGER SEAT BELT TENSIONER CIRCUIT OPEN — Continued

TEST	ACTION	APPLICABILITY
5	With the DRBIII®, record and erase all DTC's from all Airbag modules. If equipped with Passenger Airbag On - Off switch, read the DTC's in all switch positions. If any ACTIVE codes are present they must be resolved before diagnosing any stored codes. **WARNING: TO AVOID PERSONAL INJURY OR DEATH, TURN THE IGNITION OFF, DISCONNECT THE BATTERY AND WAIT TWO MINUTES BEFORE PROCEEDING.** Using the wiring diagram/schematic as a guide, inspect the wiring and connectors. Look for chaffed, pierced, pinched, or partially broken wires and broken, bent, pushed out, spread, corroded, or contaminated terminals. The following additional checks may assist you in identifying a possible intermittent problem. Reconnect any disconnected components and harness connector. **WARNING: TO AVOID PERSONAL INJURY OR DEATH, TURN THE IGNITION ON, THEN RECONNECT THE BATTERY.** With the DRBIII® monitor active codes as you work through the following steps. **WARNING: TO AVOID PERSONAL INJURY OR DEATH, MAINTAIN A SAFE DISTANCE FROM ALL AIRBAGS WHILE PERFORMING THE FOLLOWING STEPS.** Wiggle the wiring harness and connectors of the related airbag circuit or component. If codes are related to the Driver Airbag circuits, rotate the steering wheel from stop to stop. IF only stored codes return continue the test until the problem area has been isolated In the previous steps you have attempted to recreate the conditions responsible for setting active DTC in question. Are any ACTIVE DTCs present? Yes → Select appropriate symptom from Symptom List. No → No problem found at this time. Erase all codes before returning vehicle to customer.	All

Symptom:
PASSENGER SEAT BELT TENSIONER CIRCUIT SHORT

When Monitored and Set Condition:

PASSENGER SEAT BELT TENSIONER CIRCUIT SHORT

When Monitored: With the ignition on, the ACM monitors the resistance between the Passenger Seat Belt Tensioner circuits.

Set Condition: When the ACM detects low resistance in the Passenger Seat Belt Tensioner circuits.

POSSIBLE CAUSES
PASSENGER SEAT BELT TENSIONER LINE 1 SHORT TO LINE 2
PASSENGER SEAT BELT TENSIONER CIRCUIT SHORT
ACM, PASSENGER SEAT BELT TENSIONER CIRCUIT SHORT
STORED CODE OR INTERMITTENT CONDITION
ACTIVE CODE PRESENT

TEST	ACTION	APPLICABILITY
1	Turn the ignition on. **NOTE: Ensure the battery is fully charged.** **NOTE: For the purpose of this test, the AECM and ORC modules will be referred to as an ACM.** SELECT ACTIVE or STORED DTC: ACM - ACTIVE DTC Go To 2 ACM - STORED DTC Go To 5 **NOTE: When reconnecting Airbag system components, the ignition must be turned off and the battery must be disconnected.**	All
2	**WARNING: TO AVOID PERSONAL INJURY OR DEATH, TURN IGNITION OFF, DISCONNECT THE BATTERY AND WAIT TWO MINUTES BEFORE PROCEEDING.** Disconnect the Passenger Seat Belt Tensioner connector. **NOTE: Check connectors - Clean and repair as necessary.** Connect the appropriate Load Tool to the Passenger Seat Belt Tensioner connector. **WARNING: TO AVOID PERSONAL INJURY OR DEATH, TURN IGNITION ON, THEN RECONNECT THE BATTERY.** With the DRBIII®, read the active Airbag Control Module DTC's. Does the DRBIII® show PASSENGER SEAT BELT TENSIONER CIRCUIT SHORT? Yes → Go To 3 No → Replace the Passenger Seat Belt Tensioner in accordance with the Service Information. Perform __AIRBAG VERIFICATION TEST - VER 1.	All

PASSENGER SEAT BELT TENSIONER CIRCUIT SHORT — Continued

TEST	ACTION	APPLICABILITY
3	**WARNING: TO AVOID PERSONAL INJURY OR DEATH, TURN IGNITION OFF, DISCONNECT THE BATTERY AND WAIT TWO MINUTES BEFORE PROCEEDING.** Disconnect the Load Tool from the Passenger Seat Belt Tensioner connector. Disconnect the Airbag Control Module connector(s). **NOTE: Check connectors - Clean and repair as necessary.** Connect the appropriate Load Tool ACM Adaptor to the Airbag Control Module connector(s). Measure the resistance between the Passenger SBT Line 1 and line 2 circuit at the Passenger Seat Belt Tensioner connector. Is the resistance below 10K ohms? Yes → Repair the Passenger Seat Belt Tensioner Line 1 short to Line 2 circuit. Perform __AIRBAG VERIFICATION TEST - VER 1. No → Go To 4	All
4	**WARNING: TO AVOID PERSONAL INJURY OR DEATH, TURN THE IGNITION OFF, DISCONNECT THE BATTERY AND WAIT TWO MINUTES BEFORE PROCEEDING.** **WARNING: IF THE AIRBAG CONTROL MODULE IS DROPPED AT ANY TIME, IT MUST BE REPLACED. FAILURE TO TAKE THE PROPER PRECAUTIONS COULD RESULT IN ACCIDENTAL AIRBAG DEPLOYMENT AND PERSONAL INJURY OR DEATH.** If there are no possible causes remaining, view repair. Repair: Replace the Airbag Control Module in accordance with the Service Information. Perform __AIRBAG VERIFICATION TEST - VER 1.	All

PASSENGER SEAT BELT TENSIONER CIRCUIT SHORT — Continued

TEST	ACTION	APPLICABILITY
5	With the DRBIII®, record and erase all DTC's from all Airbag modules. If equipped with Passenger Airbag On - Off switch, read the DTC's in all switch positions. If any ACTIVE codes are present they must be resolved before diagnosing any stored codes. **WARNING: TO AVOID PERSONAL INJURY OR DEATH, TURN THE IGNITION OFF, DISCONNECT THE BATTERY AND WAIT TWO MINUTES BEFORE PROCEEDING.** Using the wiring diagram/schematic as a guide, inspect the wiring and connectors. Look for chaffed, pierced, pinched, or partially broken wires and broken, bent, pushed out, spread, corroded, or contaminated terminals. The following additional checks may assist you in identifying a possible intermittent problem. Reconnect any disconnected components and harness connector. **WARNING: TO AVOID PERSONAL INJURY OR DEATH, TURN THE IGNITION ON, THEN RECONNECT THE BATTERY.** With the DRBIII® monitor active codes as you work through the following steps. **WARNING: TO AVOID PERSONAL INJURY OR DEATH, MAINTAIN A SAFE DISTANCE FROM ALL AIRBAGS WHILE PERFORMING THE FOLLOWING STEPS.** Wiggle the wiring harness and connectors of the related airbag circuit or component. If codes are related to the Driver Airbag circuits, rotate the steering wheel from stop to stop. IF only stored codes return continue the test until the problem area has been isolated In the previous steps you have attempted to recreate the conditions responsible for setting active DTC in question. Are any ACTIVE DTCs present? Yes → Select appropriate symptom from Symptom List. No → No problem found at this time. Erase all codes before returning vehicle to customer.	All

Symptom:
PASSENGER SEAT BELT TENSIONER SHORT TO BATTERY

When Monitored and Set Condition:

PASSENGER SEAT BELT TENSIONER SHORT TO BATTERY

When Monitored: When the ignition is on, the ACM monitors the voltage of the Passenger Seat Belt Tensioner circuits.

Set Condition: When the ACM detects voltage on the Passenger Seat Belt Tensioner circuits.

POSSIBLE CAUSES
PASSENGER SEAT BELT TENSIONER SHORT TO BATTERY
PASSENGER SEAT BELT TENSIONER LINE 1 OR LINE 2 SHORT TO BATTERY
ACM, PASSENGER SBT SHORT TO BATTERY
STORED CODE OR INTERMITTENT CONDITION
ACTIVE CODE PRESENT

TEST	ACTION	APPLICABILITY
1	Turn the ignition on. **NOTE: Ensure the battery is fully charged.** **NOTE: For the purpose of this test, the AECM and ORC modules will be referred to as an ACM.** SELECT ACTIVE or STORED DTC: ACM - ACTIVE DTC Go To 2 ACM - STORED DTC Go To 5 **NOTE: When reconnecting Airbag system components, the ignition must be turned off and the battery must be disconnected.**	All
2	**WARNING: TO AVOID PERSONAL INJURY OR DEATH, TURN IGNITION OFF, DISCONNECT THE BATTERY AND WAIT TWO MINUTES BEFORE PROCEEDING.** Disconnect the Passenger Seat Belt Tensioner connector. **NOTE: Check connectors - Clean and repair as necessary.** Connect the appropriate Load Tool to the Passenger Seat Belt Tensioner connector. **WARNING: TO AVOID PERSONAL INJURY OR DEATH, TURN IGNITION ON, THEN RECONNECT THE BATTERY.** With the DRBIII®, read the active Airbag Control Module DTC's. Does the DRBIII® display PASSENGER SBT SHORT TO BATTERY? Yes → Go To 3 No → Replace the Passenger Seat Belt Tensioner in accordance with the Service Information. Perform __AIRBAG VERIFICATION TEST - VER 1.	All

PASSENGER SEAT BELT TENSIONER SHORT TO BATTERY — Continued

TEST	ACTION	APPLICABILITY
3	**WARNING: TO AVOID PERSONAL INJURY OR DEATH, TURN IGNITION OFF, DISCONNECT THE BATTERY AND WAIT TWO MINUTES BEFORE PROCEEDING.** Disconnect the Load Tool from the Passenger Seat Belt Tensioner connector. Disconnect the Airbag Control Module Connector(s). **NOTE: Check connectors - Clean and repair as necessary.** Connect the appropriate Load Tool ACM Adaptor to the Airbag Control Module connector(s). **WARNING: TO AVOID PERSONAL INJURY OR DEATH, TURN IGNITION ON, THEN RECONNECT THE BATTERY.** Measure the voltage of the Passenger SBT Line 1 and Line 2 circuits between the Passenger Seat Belt Tensioner connector and ground. Is there any voltage on either circuit? Yes → Repair the Passenger Seat Belt Tensioner Line 1 or Line 2 short to battery. Perform __AIRBAG VERIFICATION TEST - VER 1. No → Go To 4	All
4	**WARNING: TO AVOID PERSONAL INJURY OR DEATH, TURN THE IGNITION OFF, DISCONNECT THE BATTERY AND WAIT TWO MINUTES BEFORE PROCEEDING.** **WARNING: IF THE AIRBAG CONTROL MODULE IS DROPPED AT ANY TIME, IT MUST BE REPLACED. FAILURE TO TAKE THE PROPER PRECAUTIONS COULD RESULT IN ACCIDENTAL AIRBAG DEPLOYMENT AND PERSONAL INJURY OR DEATH.** If there are no possible causes remaining, view repair. Repair: Replace the Airbag Control Module in accordance with the Service Information. Perform __AIRBAG VERIFICATION TEST - VER 1.	All

PASSENGER SEAT BELT TENSIONER SHORT TO BATTERY — Continued

TEST	ACTION	APPLICABILITY
5	With the DRBIII®, record and erase all DTC's from all Airbag modules. If equipped with Passenger Airbag On - Off switch, read the DTC's in all switch positions. If any ACTIVE codes are present they must be resolved before diagnosing any stored codes. **WARNING: TO AVOID PERSONAL INJURY OR DEATH, TURN THE IGNITION OFF, DISCONNECT THE BATTERY AND WAIT TWO MINUTES BEFORE PROCEEDING.** Using the wiring diagram/schematic as a guide, inspect the wiring and connectors. Look for chaffed, pierced, pinched, or partially broken wires and broken, bent, pushed out, spread, corroded, or contaminated terminals. The following additional checks may assist you in identifying a possible intermittent problem. Reconnect any disconnected components and harness connector. **WARNING: TO AVOID PERSONAL INJURY OR DEATH, TURN THE IGNITION ON, THEN RECONNECT THE BATTERY.** With the DRBIII® monitor active codes as you work through the following steps. **WARNING: TO AVOID PERSONAL INJURY OR DEATH, MAINTAIN A SAFE DISTANCE FROM ALL AIRBAGS WHILE PERFORMING THE FOLLOWING STEPS.** Wiggle the wiring harness and connectors of the related airbag circuit or component. If codes are related to the Driver Airbag circuits, rotate the steering wheel from stop to stop. IF only stored codes return continue the test until the problem area has been isolated In the previous steps you have attempted to recreate the conditions responsible for setting active DTC in question. Are any ACTIVE DTCs present? Yes → Select appropriate symptom from Symptom List. No → No problem found at this time. Erase all codes before returning vehicle to customer.	All

Symptom:
PASSENGER SEAT BELT TENSIONER SHORT TO GROUND

When Monitored and Set Condition:

PASSENGER SEAT BELT TENSIONER SHORT TO GROUND

When Monitored: With the ignition on, the ACM monitors the resistance of the Passenger Seat Belt Tensioner circuits.

Set Condition: When the ACM detects la short to ground in either Passenger Seat Belt Tensioner circuits.

POSSIBLE CAUSES
PASSENGER SEAT BELT TENSIONER SHORT TO GROUND
PASSENGER SEAT BELT TENSIONER LINE 1 OR LINE 2 SHORTED TO GROUND
ACM, PASSENGER SBT SHORT TO GROUND
STORED CODE OR INTERMITTENT CONDITION
ACTIVE CODE PRESENT

TEST	ACTION	APPLICABILITY
1	Turn the ignition on. **NOTE: Ensure the battery is fully charged.** **NOTE: For the purpose of this test, the AECM and ORC modules will be referred to as an ACM.** SELECT ACTIVE or STORED DTC: ACM - ACTIVE DTC Go To 2 ACM - STORED DTC Go To 4 **NOTE: When reconnecting Airbag system components, the ignition must be turned off and the battery must be disconnected.**	All
2	**WARNING: TO AVOID PERSONAL INJURY OR DEATH, TURN IGNITION OFF, DISCONNECT THE BATTERY AND WAIT TWO MINUTES BEFORE PROCEEDING.** Disconnect the Passenger Seat Belt Tensioner connector. **NOTE: Check connectors - Clean and repair as necessary.** Connect the appropriate Load Tool to the Passenger Seat Belt Tensioner connector. **WARNING: TO AVOID PERSONAL INJURY OR DEATH, TURN IGNITION ON, THEN RECONNECT THE BATTERY.** With the DRBIII®, read the active Airbag Control Module DTC's. Does the DRBIII® display PASSENGER SBT SHORT TO GROUND? Yes → Go To 3 No → Replace the Passenger Seat Belt Tensioner in accordance with the Service Information. Perform __AIRBAG VERIFICATION TEST - VER 1.	All

PASSENGER SEAT BELT TENSIONER SHORT TO GROUND — Continued

TEST	ACTION	APPLICABILITY
3	**WARNING: TO AVOID PERSONAL INJURY OR DEATH, TURN IGNITION OFF, DISCONNECT THE BATTERY AND WAIT TWO MINUTES BEFORE PROCEEDING.** Disconnect the Load Tool from the Passenger Seat Belt Tensioner connector. Disconnect the Airbag Control Module Connector(s). **NOTE: Check connectors - Clean and repair as necessary.** Connect the appropriate Load Tool ACM Adaptor to the Airbag Control Module connector(s). Measure the resistance of the Passenger Seat Belt Tensioner Line 1 and Line 2 circuits between the Passenger SBT connector and ground. Is the resistance below 10K Ohms on either circuit? Yes → Repair the Passenger Seat Belt Tensioner Line 1 or Line 2 short to ground. Perform __AIRBAG VERIFICATION TEST - VER 1. No → Replace the Airbag Control Module in accordance with the Service Information. Perform __AIRBAG VERIFICATION TEST - VER 1.	All
4	With the DRBIII®, record and erase all DTC's from all Airbag modules. If equipped with Passenger Airbag On - Off switch, read the DTC's in all switch positions. If any ACTIVE codes are present they must be resolved before diagnosing any stored codes. **WARNING: TO AVOID PERSONAL INJURY OR DEATH, TURN THE IGNITION OFF, DISCONNECT THE BATTERY AND WAIT TWO MINUTES BEFORE PROCEEDING.** Using the wiring diagram/schematic as a guide, inspect the wiring and connectors. Look for chaffed, pierced, pinched, or partially broken wires and broken, bent, pushed out, spread, corroded, or contaminated terminals. The following additional checks may assist you in identifying a possible intermittent problem. Reconnect any disconnected components and harness connector. **WARNING: TO AVOID PERSONAL INJURY OR DEATH, TURN THE IGNITION ON, THEN RECONNECT THE BATTERY.** With the DRBIII® monitor active codes as you work through the following steps. **WARNING: TO AVOID PERSONAL INJURY OR DEATH, MAINTAIN A SAFE DISTANCE FROM ALL AIRBAGS WHILE PERFORMING THE FOLLOWING STEPS.** Wiggle the wiring harness and connectors of the related airbag circuit or component. If codes are related to the Driver Airbag circuits, rotate the steering wheel from stop to stop. IF only stored codes return continue the test until the problem area has been isolated In the previous steps you have attempted to recreate the conditions responsible for setting active DTC in question. Are any ACTIVE DTCs present? Yes → Select appropriate symptom from Symptom List. No → No problem found at this time. Erase all codes before returning vehicle to customer.	All

Symptom:
PASSENGER SEAT SENSOR FLUID LEVEL TOO LOW

When Monitored and Set Condition:

PASSENGER SEAT SENSOR FLUID LEVEL TOO LOW

When Monitored: With the ignition on, the module performs internal tests on the input signal from the Bladder assembly.

Set Condition: This DTC will set if the input signal from the PS is less than 19 - 30 A/D counts. There is probably a leak if a PS fault is also set

POSSIBLE CAUSES
OCS - SERVICE REPLACEMENT KIT

TEST	ACTION	APPLICABILITY
1	**WARNING: TO AVOID PERSONAL INJURY OR DEATH, TURN THE IGNITION OFF, DISCONNECT THE BATTERY AND WAIT TWO MINUTES BEFORE PROCEEDING.** **WARNING: IF THE OCCUPANT CLASSIFICATION MODULE IS DROPPED AT ANY TIME, IT MUST BE REPLACED. FAILURE TO TAKE THE PROPER PRECAUTIONS COULD RESULT IN ACCIDENTAL AIRBAG DEPLOYMENT AND PERSONAL INJURY OR DEATH.** If there are no possible causes remaining, view repair. Repair: Replace the OCS Bladder and Cushion Kit in accordance with service information. Then perform the Verification Required test to remove DTC created by the repair. Perform OCS VERIFICATION TEST - VER 1.	All

Symptom:
PASSENGER SQUIB 1 CIRCUIT OPEN

When Monitored and Set Condition:

PASSENGER SQUIB 1 CIRCUIT OPEN

When Monitored: With the ignition on, the ACM monitors the resistance of the Passenger Squib 1 circuits.

Set Condition: When the ACM detects an open circuit or high resistance on the Passenger Squib 1 circuits.

POSSIBLE CAUSES
PAB SQUIB 1 CIRCUIT OPEN
PAB SQUIB 1 LINE 1 OR LINE 2 CIRCUIT OPEN
ACM, PAB SQUIB 1 CIRCUIT OPEN
STORED CODE OR INTERMITTENT CONDITION
ACTIVE CODE PRESENT

TEST	ACTION	APPLICABILITY
1	Turn the ignition on. **NOTE: Ensure the battery is fully charged.** **NOTE: For the purpose of this test, the AECM and ORC modules will be referred to as an ACM.** SELECT ACTIVE or STORED DTC: ACM - ACTIVE DTC Go To 2 ACM - STORED DTC Go To 5 **NOTE: When reconnecting Airbag system components, the ignition must be turned off and the battery must be disconnected.**	All

PASSENGER SQUIB 1 CIRCUIT OPEN — Continued

TEST	ACTION	APPLICABILITY
2	**WARNING: TO AVOID PERSONAL INJURY OR DEATH, TURN THE IGNITION OFF, DISCONNECT THE BATTERY AND WAIT TWO MINUTES BEFORE PROCEEDING.** Disconnect the Passenger Airbag connector(s). **NOTE: Check connectors - Clean and repair as necessary.** **WARNING: DO NOT PLACE AN INTACT UNDEPLOYED AIRBAG FACE DOWN ON A HARD SURFACE, THE AIRBAG WILL PROPEL INTO THE AIR IF ACCIDENTALLY DEPLOYED. FAILURE TO TAKE THE PROPER PRECAUTIONS COULD RESULT IN ACCIDENTAL AIRBAG DEPLOYMENT AND PERSONAL INJURY OR DEATH.** Connect the Load Tool to the Passenger Airbag connector(s). **WARNING: TO AVOID PERSONAL INJURY OR DEATH, TURN IGNITION ON, THEN RECONNECT THE BATTERY.** With the DRBIII®, read the active Airbag Control Module DTC's. Does the DRBIII® show PASSENGER SQUIB 1 CIRCUIT OPEN? Yes → Go To 3 No → Replace the Passenger Airbag in accordance with the Service Information. Perform __AIRBAG VERIFICATION TEST - VER 1.	All
3	**WARNING: TO AVOID PERSONAL INJURY OR DEATH, TURN THE IGNITION OFF, DISCONNECT THE BATTERY AND WAIT TWO MINUTES BEFORE PROCEEDING.** Disconnect the Load Tool from the Passenger Airbag connector(s). Disconnect the Airbag Control module connector(s). **NOTE: Check connectors - Clean and repair as necessary.** Connect the Load Tool ACM Adaptor to the Airbag Control Module connector(s). Measure the resistance of the Passenger Squib 1 Line 1 and Line 2 circuit between the ACM Adaptor and the Passenger Airbag connector. Is the resistance below 1.0 ohms on both circuits? Yes → Go To 4 No → Repair open or high resistance in Passenger Squib 1 Line 1 or Line 2 circuits. Perform __AIRBAG VERIFICATION TEST - VER 1.	All
4	**WARNING: TO AVOID PERSONAL INJURY OR DEATH, TURN THE IGNITION OFF, DISCONNECT THE BATTERY AND WAIT TWO MINUTES BEFORE PROCEEDING.** **WARNING: IF THE AIRBAG CONTROL MODULE IS DROPPED AT ANY TIME, IT MUST BE REPLACED. FAILURE TO TAKE THE PROPER PRECAUTIONS COULD RESULT IN ACCIDENTAL AIRBAG DEPLOYMENT AND PERSONAL INJURY OR DEATH.** If there are no possible causes remaining, view repair. Repair: Replace the Airbag Control Module in accordance with Service Instructions. Perform __AIRBAG VERIFICATION TEST - VER 1.	All

PASSENGER SQUIB 1 CIRCUIT OPEN — Continued

TEST	ACTION	APPLICABILITY
5	With the DRBIII®, record and erase all DTC's from all Airbag modules. If equipped with Passenger Airbag On - Off switch, read the DTC's in all switch positions. If any ACTIVE codes are present they must be resolved before diagnosing any stored codes. **WARNING: TO AVOID PERSONAL INJURY OR DEATH, TURN THE IGNITION OFF, DISCONNECT THE BATTERY AND WAIT TWO MINUTES BEFORE PROCEEDING.** Using the wiring diagram/schematic as a guide, inspect the wiring and connectors. Look for chaffed, pierced, pinched, or partially broken wires and broken, bent, pushed out, spread, corroded, or contaminated terminals. The following additional checks may assist you in identifying a possible intermittent problem. Reconnect any disconnected components and harness connector. **WARNING: TO AVOID PERSONAL INJURY OR DEATH, TURN THE IGNITION ON, THEN RECONNECT THE BATTERY.** With the DRBIII® monitor active codes as you work through the following steps. **WARNING: TO AVOID PERSONAL INJURY OR DEATH, MAINTAIN A SAFE DISTANCE FROM ALL AIRBAGS WHILE PERFORMING THE FOLLOWING STEPS.** Wiggle the wiring harness and connectors of the related airbag circuit or component. If codes are related to the Driver Airbag circuits, rotate the steering wheel from stop to stop. IF only stored codes return continue the test until the problem area has been isolated In the previous steps you have attempted to recreate the conditions responsible for setting active DTC in question. Are any ACTIVE DTCs present? Yes → Select appropriate symptom from Symptom List. No → No problem found at this time. Erase all codes before returning vehicle to customer.	All

Symptom:
PASSENGER SQUIB 1 CIRCUIT SHORT

When Monitored and Set Condition:

PASSENGER SQUIB 1 CIRCUIT SHORT

When Monitored: With the ignition on, the ACM monitors the resistance between the Passenger Squib 1 circuits.

Set Condition: When the ACM detects low resistance in the Passenger Squib 1 circuits.

POSSIBLE CAUSES
PAB SQUIB 1 CIRCUIT SHORT
PAB SQUIB 1 LINE 1 SHORT TO LINE 2
ACM, PAB SQUIB 1 CIRCUIT SHORT
STORED CODE OR INTERMITTENT CONDITION
ACTIVE CODE PRESENT

TEST	ACTION	APPLICABILITY
1	Turn the ignition on. **NOTE: Ensure the battery is fully charged.** **NOTE: For the purpose of this test, the AECM and ORC modules will be referred to as an ACM.** SELECT ACTIVE or STORED DTC: ACM - ACTIVE DTC Go To 2 ACM - STORED DTC Go To 5 **NOTE: When reconnecting Airbag system components, the ignition must be turned off and the battery must be disconnected.**	All

PASSENGER SQUIB 1 CIRCUIT SHORT — Continued

TEST	ACTION	APPLICABILITY
2	**WARNING: TO AVOID PERSONAL INJURY OR DEATH, TURN THE IGNITION OFF, DISCONNECT THE BATTERY AND WAIT TWO MINUTES BEFORE PROCEEDING.** Disconnect the Passenger Airbag connector(s). **NOTE: Check connectors - Clean and repair as necessary.** **WARNING: DO NOT PLACE AN INTACT UNDEPLOYED AIRBAG FACE DOWN ON A HARD SURFACE, THE AIRBAG WILL PROPEL INTO THE AIR IF ACCIDENTALLY DEPLOYED. FAILURE TO TAKE THE PROPER PRECAUTIONS COULD RESULT IN ACCIDENTAL AIRBAG DEPLOYMENT AND PERSONAL INJURY OR DEATH.** Connect the appropriate Load Tool to the Passenger Airbag connector(s). **WARNING: TO AVOID PERSONAL INJURY OR DEATH, TURN THE IGNITION ON, THEN RECONNECT THE BATTERY.** With the DRBIII®, read the active Airbag Control Module DTC's. Does the DRBIII® show PASSENGER SQUIB 1 CIRCUIT SHORT? Yes → Go To 3 No → Replace the Passenger Airbag in accordance with the Service Information. Perform __AIRBAG VERIFICATION TEST - VER 1.	All
3	**WARNING: TO AVOID PERSONAL INJURY OR DEATH, TURN THE IGNITION OFF, DISCONNECT THE BATTERY AND WAIT TWO MINUTES BEFORE PROCEEDING.** Disconnect the Load Tool from the Passenger Airbag connector(s). Disconnect the Airbag Control Module connector(s). **NOTE: Check connectors - Clean and repair as necessary.** Connect the appropriate Load Tool Adapter to the Airbag Control Module connector(s). Measure the resistance between Passenger Squib 1 Line 1 and Line 2 circuits at the Passenger Airbag connector. Is the resistance below 10K ohms? Yes → Repair Passenger Squib 1 Line 1 circuit short to Passenger Squib 1 Line 2 circuit. Perform __AIRBAG VERIFICATION TEST - VER 1. No → Go To 4	All
4	**WARNING: TO AVOID PERSONAL INJURY OR DEATH, TURN THE IGNITION OFF, DISCONNECT THE BATTERY AND WAIT TWO MINUTES BEFORE PROCEEDING.** **WARNING: IF THE AIRBAG CONTROL MODULE IS DROPPED AT ANY TIME, IT MUST BE REPLACED. FAILURE TO TAKE THE PROPER PRECAUTIONS COULD RESULT IN ACCIDENTAL AIRBAG DEPLOYMENT AND PERSONAL INJURY OR DEATH.** If there are no possible causes remaining, view repair. Repair: Replace the Airbag Control Module in accordance with Service Information. Perform __AIRBAG VERIFICATION TEST - VER 1.	All

PASSENGER SQUIB 1 CIRCUIT SHORT — Continued

TEST	ACTION	APPLICABILITY
5	With the DRBIII®, record and erase all DTC's from all Airbag modules. If equipped with Passenger Airbag On - Off switch, read the DTC's in all switch positions. If any ACTIVE codes are present they must be resolved before diagnosing any stored codes. **WARNING: TO AVOID PERSONAL INJURY OR DEATH, TURN THE IGNITION OFF, DISCONNECT THE BATTERY AND WAIT TWO MINUTES BEFORE PROCEEDING.** Using the wiring diagram/schematic as a guide, inspect the wiring and connectors. Look for chaffed, pierced, pinched, or partially broken wires and broken, bent, pushed out, spread, corroded, or contaminated terminals. The following additional checks may assist you in identifying a possible intermittent problem. Reconnect any disconnected components and harness connector. **WARNING: TO AVOID PERSONAL INJURY OR DEATH, TURN THE IGNITION ON, THEN RECONNECT THE BATTERY.** With the DRBIII® monitor active codes as you work through the following steps. **WARNING: TO AVOID PERSONAL INJURY OR DEATH, MAINTAIN A SAFE DISTANCE FROM ALL AIRBAGS WHILE PERFORMING THE FOLLOWING STEPS.** Wiggle the wiring harness and connectors of the related airbag circuit or component. If codes are related to the Driver Airbag circuits, rotate the steering wheel from stop to stop. IF only stored codes return continue the test until the problem area has been isolated In the previous steps you have attempted to recreate the conditions responsible for setting active DTC in question. Are any ACTIVE DTCs present? Yes → Select appropriate symptom from Symptom List. No → No problem found at this time. Erase all codes before returning vehicle to customer.	All

Symptom:
PASSENGER SQUIB 1 SHORT TO BATTERY

When Monitored and Set Condition:

PASSENGER SQUIB 1 SHORT TO BATTERY

When Monitored: With the ignition on, the ACM monitors the voltage on the Passenger Squib 1 circuits.

Set Condition: When the ACM detects voltage on the Passenger Squib 1 circuits.

POSSIBLE CAUSES
PAB SQUIB 1 CIRCUITS SHORT TO BATTERY
PAB SQUIB 1 LINE 1 OR LINE 2 SHORT TO BATTERY
ACM, PAB SQUIB 1 CIRCUIT SHORT TO BATTERY
STORED CODE OR INTERMITTENT CONDITION
ACTIVE CODE PRESENT

TEST	ACTION	APPLICABILITY
1	Turn the ignition on. **NOTE: Ensure the battery is fully charged.** **NOTE: For the purpose of this test, the AECM and ORC modules will be referred to as an ACM.** SELECT ACTIVE or STORED DTC: ACM - ACTIVE DTC Go To 2 ACM - STORED DTC Go To 5 **NOTE: When reconnecting Airbag system components, the ignition must be turned off and the battery must be disconnected.**	All

PASSENGER SQUIB 1 SHORT TO BATTERY — Continued

TEST	ACTION	APPLICABILITY
2	**WARNING: TO AVOID PERSONAL INJURY OR DEATH, DISCONNECT THE BATTERY AND WAIT TWO MINUTES BEFORE PROCEEDING.** Disconnect the Passenger Airbag connector(s). **NOTE: Check connectors - Clean and repair as necessary.** **WARNING: DO NOT PLACE AN INTACT UNDEPLOYED AIRBAG FACE DOWN ON A HARD SURFACE, THE AIRBAG WILL PROPEL INTO THE AIR IF ACCIDENTALLY DEPLOYED. FAILURE TO TAKE THE PROPER PRECAUTIONS COULD RESULT IN ACCIDENTAL AIRBAG DEPLOYMENT AND PERSONAL INJURY OR DEATH.** Connect the appropriate Load Tool to the Passenger Airbag connector(s). **WARNING: TO AVOID PERSONAL INJURY OR DEATH, THE IGNITION ON, THEN RECONNECT THE BATTERY.** With the DRBIII®, read the active Airbag Control Module DTC's. Does the DRBIII® show PASSENGER SQUIB 1 CIRCUIT SHORT TO BATTERY? Yes → Go To 3 No → Replace Passenger Airbag in accordance with the Service Information. Perform __AIRBAG VERIFICATION TEST - VER 1.	All
3	**WARNING: TO AVOID PERSONAL INJURY OR DEATH, TURN THE IGNITION OFF, DISCONNECT THE BATTERY AND WAIT TWO MINUTES BEFORE PROCEEDING.** Disconnect the Load Tool from the Passenger Airbag connector(s). Disconnect the Airbag Control Module connector(s). **NOTE: Check connectors - Clean and repair as necessary.** Connect the appropriate Load Tool Adaptor to the Airbag Control Module connector(s). **WARNING: AVOID PERSONAL INJURY OR DEATH, TURN IGNITION ON, THEN RECONNECT THE BATTERY.** Measure the voltage on the Passenger Squib 1 Line 1 and Line 2 circuits between the Passenger Airbag connector and ground. Is there any voltage present? Yes → Repair Passenger Squib 1 Line 1 or Line 2 circuit short to battery. Perform __AIRBAG VERIFICATION TEST - VER 1. No → Go To 4	All
4	**WARNING: TO AVOID PERSONAL INJURY OR DEATH, TURN THE IGNITION OFF, DISCONNECT THE BATTERY AND WAIT TWO MINUTES BEFORE PROCEEDING.** **WARNING: IF THE AIRBAG CONTROL MODULE IS DROPPED AT ANY TIME, IT MUST BE REPLACED. FAILURE TO TAKE THE PROPER PRECAUTIONS COULD RESULT IN ACCIDENTAL AIRBAG DEPLOYMENT AND PERSONAL INJURY OR DEATH.** If there are no possible causes remaining, view repair. Repair: Replace the Airbag Control Module in accordance with Service Instructions. Perform __AIRBAG VERIFICATION TEST - VER 1.	All

PASSENGER SQUIB 1 SHORT TO BATTERY — Continued

TEST	ACTION	APPLICABILITY
5	With the DRBIII®, record and erase all DTC's from all Airbag modules. If equipped with Passenger Airbag On - Off switch, read the DTC's in all switch positions. If any ACTIVE codes are present they must be resolved before diagnosing any stored codes. **WARNING: TO AVOID PERSONAL INJURY OR DEATH, TURN THE IGNITION OFF, DISCONNECT THE BATTERY AND WAIT TWO MINUTES BEFORE PROCEEDING.** Using the wiring diagram/schematic as a guide, inspect the wiring and connectors. Look for chaffed, pierced, pinched, or partially broken wires and broken, bent, pushed out, spread, corroded, or contaminated terminals. The following additional checks may assist you in identifying a possible intermittent problem. Reconnect any disconnected components and harness connector. **WARNING: TO AVOID PERSONAL INJURY OR DEATH, TURN THE IGNITION ON, THEN RECONNECT THE BATTERY.** With the DRBIII® monitor active codes as you work through the following steps. **WARNING: TO AVOID PERSONAL INJURY OR DEATH, MAINTAIN A SAFE DISTANCE FROM ALL AIRBAGS WHILE PERFORMING THE FOLLOWING STEPS.** Wiggle the wiring harness and connectors of the related airbag circuit or component. If codes are related to the Driver Airbag circuits, rotate the steering wheel from stop to stop. IF only stored codes return continue the test until the problem area has been isolated In the previous steps you have attempted to recreate the conditions responsible for setting active DTC in question. Are any ACTIVE DTCs present? Yes → Select appropriate symptom from Symptom List. No → No problem found at this time. Erase all codes before returning vehicle to customer.	All

Symptom:
PASSENGER SQUIB 1 SHORT TO GROUND

When Monitored and Set Condition:

PASSENGER SQUIB 1 SHORT TO GROUND

When Monitored: With the ignition on, the ACM monitors the resistance of the Passenger Squib 1 circuits.

Set Condition: When the ACM detects a short to ground in either Passenger Squib 1 circuits.

POSSIBLE CAUSES
PAB SQUIB 1 CIRCUITS SHORT TO GROUND
PAB SQUIB 1 LINE 1 OR LINE 2 SHORT TO GROUND
ACM, PAB SQUIB 1 SHORT TO GROUND
STORED CODE OR INTERMITTENT CONDITION
ACTIVE CODE PRESENT

TEST	ACTION	APPLICABILITY
1	Turn the ignition on. **NOTE: Ensure the battery is fully charged.** **NOTE: For the purpose of this test, the AECM and ORC modules will be referred to as an ACM.** SELECT ACTIVE or STORED DTC: ACM - ACTIVE DTC Go To 2 ACM - STORED DTC Go To 5 **NOTE: When reconnecting Airbag system components, the ignition must be turned off and the battery must be disconnected.**	All

PASSENGER SQUIB 1 SHORT TO GROUND — Continued

TEST	ACTION	APPLICABILITY
2	**WARNING: TO AVOID PERSONAL INJURY OR DEATH, TURN THE IGNITION OFF, DISCONNECT THE BATTERY AND WAIT TWO MINUTES BEFORE PROCEEDING.** Disconnect the Passenger Airbag connector(s). **NOTE: Check connectors - Clean and repair as necessary.** **WARNING: DO NOT PLACE AN INTACT UNDEPLOYED AIRBAG FACE DOWN ON A HARD SURFACE, THE AIRBAG WILL PROPEL INTO THE AIR IF ACCIDENTALLY DEPLOYED. FAILURE TO TAKE THE PROPER PRECAUTIONS COULD RESULT IN ACCIDENTAL AIRBAG DEPLOYMENT AND PERSONAL INJURY OR DEATH.** Connect the appropriate Load Tool to the Passenger Airbag connector(s). **WARNING: TO AVOID PERSONAL INJURY OR DEATH, TURN THE IGNITION ON, THEN RECONNECT THE BATTERY.** With the DRBIII®, read the active Airbag Control Module DTC's. Does the DRBIII® show PASSENGER SQUIB 1 SHORT TO GROUND? Yes → Go To 3 No → Replace the Passenger Airbag in accordance with the Service Information. Perform __AIRBAG VERIFICATION TEST - VER 1.	All
3	**WARNING: TO AVOID PERSONAL INJURY OR DEATH, TURN THE IGNITION OFF, DISCONNECT THE BATTERY AND WAIT TWO MINUTES BEFORE PROCEEDING.** Disconnect the Load Tool from the Passenger Airbag connector(s). Disconnect the Airbag Control Module connector(s). **NOTE: Check connectors - Clean repair as necessary.** Connect the appropriate Load Tool Adaptor to the Airbag Control Module connector. Measure the resistance of the Passenger Squib 1 Line 1 or Line 2 circuit between the Passenger Airbag Module Connector and ground. Is the resistance below 10K ohms on either circuit? Yes → Repair Passenger Squib 1 Line 1 and Line 2 circuits for a short to ground. Perform __AIRBAG VERIFICATION TEST - VER 1. No → Go To 4	All
4	**WARNING: TO AVOID PERSONAL INJURY OR DEATH, TURN THE IGNITION OFF, DISCONNECT THE BATTERY AND WAIT TWO MINUTES BEFORE PROCEEDING.** **WARNING: IF THE AIRBAG CONTROL MODULE IS DROPPED AT ANY TIME, IT MUST BE REPLACED. FAILURE TO TAKE THE PROPER PRECAUTIONS COULD RESULT IN ACCIDENTAL AIRBAG DEPLOYMENT AND PERSONAL INJURY OR DEATH.** If there are no possible causes remaining, view repair. Repair: Replace the Airbag Control Module in accordance with Service Information. Perform __AIRBAG VERIFICATION TEST - VER 1.	All

PASSENGER SQUIB 1 SHORT TO GROUND — Continued

TEST	ACTION	APPLICABILITY
5	With the DRBIII®, record and erase all DTC's from all Airbag modules. If equipped with Passenger Airbag On - Off switch, read the DTC's in all switch positions. If any ACTIVE codes are present they must be resolved before diagnosing any stored codes. **WARNING: TO AVOID PERSONAL INJURY OR DEATH, TURN THE IGNITION OFF, DISCONNECT THE BATTERY AND WAIT TWO MINUTES BEFORE PROCEEDING.** Using the wiring diagram/schematic as a guide, inspect the wiring and connectors. Look for chaffed, pierced, pinched, or partially broken wires and broken, bent, pushed out, spread, corroded, or contaminated terminals. The following additional checks may assist you in identifying a possible intermittent problem. Reconnect any disconnected components and harness connector. **WARNING: TO AVOID PERSONAL INJURY OR DEATH, TURN THE IGNITION ON, THEN RECONNECT THE BATTERY.** With the DRBIII® monitor active codes as you work through the following steps. **WARNING: TO AVOID PERSONAL INJURY OR DEATH, MAINTAIN A SAFE DISTANCE FROM ALL AIRBAGS WHILE PERFORMING THE FOLLOWING STEPS.** Wiggle the wiring harness and connectors of the related airbag circuit or component. If codes are related to the Driver Airbag circuits, rotate the steering wheel from stop to stop. IF only stored codes return continue the test until the problem area has been isolated In the previous steps you have attempted to recreate the conditions responsible for setting active DTC in question. Are any ACTIVE DTCs present? Yes → Select appropriate symptom from Symptom List. No → No problem found at this time. Erase all codes before returning vehicle to customer.	All

Symptom:
PASSENGER SQUIB 2 CIRCUIT OPEN

When Monitored and Set Condition:

PASSENGER SQUIB 2 CIRCUIT OPEN

When Monitored: With the ignition on, the ACM monitors the resistance of the Passenger Squib 2 circuits.

Set Condition: When the ACM detects an open circuit or high resistance on the Passenger Squib 2 circuits.

POSSIBLE CAUSES
PASSENGER AIRBAG SQUIB 2 CIRCUIT OPEN
PASSENGER SQUIB 2 LINE 1 OR LINE 2 CIRCUIT OPEN
ACM, PASSENGER SQUIB 2 CIRCUIT OPEN
STORED CODE OR INTERMITTENT CONDITION
ACTIVE CODE PRESENT

TEST	ACTION	APPLICABILITY
1	Turn the ignition on. **NOTE: Ensure the battery is fully charged.** **NOTE: For the purpose of this test, the AECM and ORC modules will be referred to as an ACM.** SELECT ACTIVE or STORED DTC: ACM - ACTIVE DTC Go To 2 ACM - STORED DTC Go To 5 **NOTE: When reconnecting Airbag system components, the ignition must be turned off and the battery must be disconnected.**	All

PASSENGER SQUIB 2 CIRCUIT OPEN — Continued

TEST	ACTION	APPLICABILITY
2	**WARNING: TO AVOID PERSONAL INJURY OR DEATH, TURN THE IGNITION OFF, DISCONNECT THE BATTERY AND WAIT TWO MINUTES BEFORE PROCEEDING.** Disconnect the Passenger Airbag connector(s). **NOTE: Check connectors - Clean and repair as necessary.** **WARNING: DO NOT PLACE AN INTACT UNDEPLOYED AIRBAG FACE DOWN ON A HARD SURFACE, THE AIRBAG WILL PROPEL INTO THE AIR IF ACCIDENTALLY DEPLOYED. FAILURE TO TAKE THE PROPER PRECAUTIONS COULD RESULT IN ACCIDENTAL AIRBAG DEPLOYMENT AND PERSONAL INJURY OR DEATH.** Connect the appropriate Load Tool to the Passenger Airbag connector(s). **WARNING: TO AVOID PERSONAL INJURY OR DEATH, TURN THE IGNITION ON, THEN RECONNECT THE BATTERY.** With the DRBIII®, read the active Airbag Control Module DTC's. Does the DRBIII® show PASSENGER SQUIB 2 CIRCUIT OPEN? Yes → Go To 3 No → Replace the Passenger Airbag in accordance with the Service Information. Perform __AIRBAG VERIFICATION TEST - VER 1.	All
3	**WARNING: TO AVOID PERSONAL INJURY OR DEATH, TURN THE IGNITION OFF, DISCONNECT THE BATTERY AND WAIT TWO MINUTES BEFORE PROCEEDING.** Disconnect the Load Tool from the Passenger Airbag connector(s). Disconnect the Airbag Control Module connector(s). **NOTE: Check connectors - Clean and repair as necessary.** Connect the appropriate Load Tool adaptor to the Airbag Control Module connector(s). Measure the resistance of the Passenger Squib 2 Line 1 and Line 2 circuits between the ACM Adaptor and the Passenger Airbag connector. Is the resistance below 1.0 ohms on both circuits? Yes → Go To 4 No → Repair open or high resistance in Passenger Squib 2 Line 1 or Line 2 circuits. Perform __AIRBAG VERIFICATION TEST - VER 1.	All
4	**WARNING: TO AVOID PERSONAL INJURY OR DEATH, TURN THE IGNITION OFF, DISCONNECT THE BATTERY AND WAIT TWO MINUTES BEFORE PROCEEDING.** **WARNING: IF THE AIRBAG CONTROL MODULE IS DROPPED AT ANY TIME, IT MUST BE REPLACED. FAILURE TO TAKE THE PROPER PRECAUTIONS COULD RESULT IN ACCIDENTAL AIRBAG DEPLOYMENT AND PERSONAL INJURY OR DEATH.** If there are no possible causes remaining, view repair. Repair: Replace the Airbag Control Module in accordance with Service Information. Perform __AIRBAG VERIFICATION TEST - VER 1.	All

PASSENGER SQUIB 2 CIRCUIT OPEN — Continued

TEST	ACTION	APPLICABILITY
5	With the DRBIII®, record and erase all DTC's from all Airbag modules. If equipped with Passenger Airbag On - Off switch, read the DTC's in all switch positions. If any ACTIVE codes are present they must be resolved before diagnosing any stored codes. **WARNING: TO AVOID PERSONAL INJURY OR DEATH, TURN THE IGNITION OFF, DISCONNECT THE BATTERY AND WAIT TWO MINUTES BEFORE PROCEEDING.** Using the wiring diagram/schematic as a guide, inspect the wiring and connectors. Look for chaffed, pierced, pinched, or partially broken wires and broken, bent, pushed out, spread, corroded, or contaminated terminals. The following additional checks may assist you in identifying a possible intermittent problem. Reconnect any disconnected components and harness connector. **WARNING: TO AVOID PERSONAL INJURY OR DEATH, TURN THE IGNITION ON, THEN RECONNECT THE BATTERY.** With the DRBIII® monitor active codes as you work through the following steps. **WARNING: TO AVOID PERSONAL INJURY OR DEATH, MAINTAIN A SAFE DISTANCE FROM ALL AIRBAGS WHILE PERFORMING THE FOLLOWING STEPS.** Wiggle the wiring harness and connectors of the related airbag circuit or component. If codes are related to the Driver Airbag circuits, rotate the steering wheel from stop to stop. IF only stored codes return continue the test until the problem area has been isolated In the previous steps you have attempted to recreate the conditions responsible for setting active DTC in question. Are any ACTIVE DTCs present? Yes → Select appropriate symptom from Symptom List. No → No problem found at this time. Erase all codes before returning vehicle to customer.	All

Symptom:
PASSENGER SQUIB 2 CIRCUIT SHORT

When Monitored and Set Condition:

PASSENGER SQUIB 2 CIRCUIT SHORT

When Monitored: With the ignition on, the ACM monitors the resistance between the Passenger Squib 2 circuits.

Set Condition: When the ACM detects low resistance in the Passenger Squib 2 circuits.

POSSIBLE CAUSES
PASSENGER AIRBAG SQUIB 2 CIRCUIT SHORT
PASSENGER SQUIB 2 LINE 1 SHORT TO LINE 2
ACM, PASSENGER SQUIB 2 CIRCUIT SHORT
STORED CODE OR INTERMITTENT CONDITION
ACTIVE CODE PRESENT

TEST	ACTION	APPLICABILITY
1	Turn the ignition on. **NOTE: Ensure the battery is fully charged.** **NOTE: For the purpose of this test, the AECM and ORC modules will be referred to as an ACM.** SELECT ACTIVE or STORED DTC: ACM - ACTIVE DTC Go To 2 ACM - STORED DTC Go To 5 **NOTE: When reconnecting Airbag system components, the ignition must be turned off and the battery must be disconnected.**	All

PASSENGER SQUIB 2 CIRCUIT SHORT — Continued

TEST	ACTION	APPLICABILITY
2	**WARNING: TO AVOID PERSONAL INJURY OR DEATH, TURN THE IGNITION OFF, DISCONNECT THE BATTERY AND WAIT TWO MINUTES BEFORE PROCEEDING.** Disconnect the Passenger Airbag connector(s). **NOTE: Check connectors - Clean and repair as necessary.** **WARNING: DO NOT PLACE AN INTACT UNDEPLOYED AIRBAG FACE DOWN ON A HARD SURFACE, THE AIRBAG WILL PROPEL INTO THE AIR IF ACCIDENTALLY DEPLOYED. FAILURE TO TAKE THE PROPER PRECAUTIONS COULD RESULT IN ACCIDENTAL AIRBAG DEPLOYMENT AND PERSONAL INJURY OR DEATH.** Connect the appropriate Load Tool to the Passenger Airbag connector(s). **WARNING: TO AVOID PERSONAL INJURY OR DEATH, TURN THE IGNITION ON, THEN RECONNECT THE BATTERY.** With the DRBIII®, read the active Airbag Control Module DTC's. Does the DRBIII® show PASSENGER SQUIB 2 CIRCUIT SHORT? Yes → Go To 3 No → Replace Passenger Airbag in accordance with the Service Information. Perform __AIRBAG VERIFICATION TEST - VER 1.	All
3	**WARNING: TO AVOID PERSONAL INJURY OR DEATH, TURN THE IGNITION OFF, DISCONNECT THE BATTERY AND WAIT TWO MINUTES BEFORE PROCEEDING.** Disconnect the Load Tool from the Passenger Airbag connector(s). Disconnect the Airbag Control Module connector(s). **NOTE: Check connectors - Clean and repair as necessary.** Connect the appropriate Load Tool Adaptor to the Airbag Control Module connector(s). Measure the resistance between the Passenger Squib 2 Line 1 and line 2 circuits at the Passenger Airbag connector(s). Is the resistance below 10K ohms? Yes → Repair Passenger Squib 2 Line 1 circuit short to Passenger Squib 2 Line 2 circuit. Perform __AIRBAG VERIFICATION TEST - VER 1. No → Go To 4	All
4	**WARNING: TO AVOID PERSONAL INJURY OR DEATH, TURN THE IGNITION OFF, DISCONNECT THE BATTERY AND WAIT TWO MINUTES BEFORE PROCEEDING.** **WARNING: IF THE AIRBAG CONTROL MODULE IS DROPPED AT ANY TIME, IT MUST BE REPLACED. FAILURE TO TAKE THE PROPER PRECAUTIONS COULD RESULT IN ACCIDENTAL AIRBAG DEPLOYMENT AND PERSONAL INJURY OR DEATH.** If there are no possible causes remaining, view repair. Repair: Replace the Airbag Control Module in accordance with Service Information. Perform __AIRBAG VERIFICATION TEST - VER 1.	All

PASSENGER SQUIB 2 CIRCUIT SHORT — Continued

TEST	ACTION	APPLICABILITY
5	With the DRBIII®, record and erase all DTC's from all Airbag modules. If equipped with Passenger Airbag On - Off switch, read the DTC's in all switch positions. If any ACTIVE codes are present they must be resolved before diagnosing any stored codes. **WARNING: TO AVOID PERSONAL INJURY OR DEATH, TURN THE IGNITION OFF, DISCONNECT THE BATTERY AND WAIT TWO MINUTES BEFORE PROCEEDING.** Using the wiring diagram/schematic as a guide, inspect the wiring and connectors. Look for chaffed, pierced, pinched, or partially broken wires and broken, bent, pushed out, spread, corroded, or contaminated terminals. The following additional checks may assist you in identifying a possible intermittent problem. Reconnect any disconnected components and harness connector. **WARNING: TO AVOID PERSONAL INJURY OR DEATH, TURN THE IGNITION ON, THEN RECONNECT THE BATTERY.** With the DRBIII® monitor active codes as you work through the following steps. **WARNING: TO AVOID PERSONAL INJURY OR DEATH, MAINTAIN A SAFE DISTANCE FROM ALL AIRBAGS WHILE PERFORMING THE FOLLOWING STEPS.** Wiggle the wiring harness and connectors of the related airbag circuit or component. If codes are related to the Driver Airbag circuits, rotate the steering wheel from stop to stop. IF only stored codes return continue the test until the problem area has been isolated In the previous steps you have attempted to recreate the conditions responsible for setting active DTC in question. Are any ACTIVE DTCs present? Yes → Select appropriate symptom from Symptom List. No → No problem found at this time. Erase all codes before returning vehicle to customer.	All

Symptom:
PASSENGER SQUIB 2 SHORT TO BATTERY

When Monitored and Set Condition:

PASSENGER SQUIB 2 SHORT TO BATTERY

When Monitored: With the ignition on, the ACM monitors the voltage of the Passenger Squib 2 circuits.

Set Condition: When the ACM detects voltage on the Passenger Squib 2 circuits.

POSSIBLE CAUSES
PASSENGER AIRBAG SQUIB 2 CIRCUIT SHORT TO BATTERY
PASSENGER SQUIB 2 LINE 1 OR LINE 2 SHORT TO BATTERY
ACM, PASSENGER SQUIB 2 CIRCUIT SHORT TO BATTERY
STORED CODE OR INTERMITTENT CONDITION
ACTIVE CODE PRESENT

TEST	ACTION	APPLICABILITY
1	Turn the ignition on. **NOTE: Ensure the battery is fully charged.** **NOTE: For the purpose of this test, the AECM and ORC modules will be referred to as an ACM.** SELECT ACTIVE or STORED DTC: ACM - ACTIVE DTC Go To 2 ACM - STORED DTC Go To 5 **NOTE: When reconnecting Airbag system components, the ignition must be turned off and the battery must be disconnected.**	All

PASSENGER SQUIB 2 SHORT TO BATTERY — Continued

TEST	ACTION	APPLICABILITY
2	**WARNING: TO AVOID PERSONAL INJURY OR DEATH, TURN THE IGNITION OFF, DISCONNECT THE BATTERY AND WAIT TWO MINUTES BEFORE PROCEEDING.** Disconnect the Passenger Airbag connector(s). **NOTE: Check connectors - Clean and repair as necessary.** **WARNING: DO NOT PLACE AN INTACT UNDEPLOYED AIRBAG FACE DOWN ON A HARD SURFACE, THE AIRBAG WILL PROPEL INTO THE AIR IF ACCIDENTALLY DEPLOYED. FAILURE TO TAKE THE PROPER PRECAUTIONS COULD RESULT IN ACCIDENTAL AIRBAG DEPLOYMENT AND PERSONAL INJURY OR DEATH.** Connect the appropriate Load Tool to the Passenger Airbag connector(s). **WARNING: TO AVOID PERSONAL INJURY OR DEATH, TURN THE IGNITION ON, THEN RECONNECT THE BATTERY.** With the DRBIII®, read the active Airbag Control Module DTC's. Does the DRBIII® show PASSENGER SQUIB 2 SHORT TO BATTERY? Yes → Go To 3 No → Replace Passenger Airbag in accordance with the Service Information. Perform __AIRBAG VERIFICATION TEST - VER 1.	All
3	**WARNING: TO AVOID PERSONAL INJURY OR DEATH, TURN THE IGNITION OFF, DISCONNECT THE BATTERY AND WAIT TWO MINUTES BEFORE PROCEEDING.** Disconnect the Load Tool from the Passenger Airbag connector(s). Disconnect the Airbag Control Module connector(s). **NOTE: Check connectors - Clean and repair as necessary.** Connect the appropriate Load Tool Adaptor to the Airbag Control Module connector(s). **WARNING: TO AVOID PERSONAL INJURY OR DEATH, TURN THE IGNITION ON, THEN RECONNECT THE BATTERY.** Measure the voltage on the Passenger Squib 2 Line 1 and Line 2 circuits between the Passenger Airbag connector and ground. Is there any voltage present? Yes → Repair Passenger Squib 2 Line 1 or Line 2 circuit shorted to battery. Perform __AIRBAG VERIFICATION TEST - VER 1. No → Go To 4	All
4	**WARNING: TO AVOID PERSONAL INJURY OR DEATH, TURN THE IGNITION OFF, DISCONNECT THE BATTERY AND WAIT TWO MINUTES BEFORE PROCEEDING.** **WARNING: IF THE AIRBAG CONTROL MODULE IS DROPPED AT ANY TIME, IT MUST BE REPLACED. FAILURE TO TAKE THE PROPER PRECAUTIONS COULD RESULT IN ACCIDENTAL AIRBAG DEPLOYMENT AND PERSONAL INJURY OR DEATH.** If there are no possible causes remaining, view repair. Repair: Replace the Airbag Control Module in accordance with Service Information. Perform __AIRBAG VERIFICATION TEST - VER 1.	All

PASSENGER SQUIB 2 SHORT TO BATTERY — Continued

TEST	ACTION	APPLICABILITY
5	With the DRBIII®, record and erase all DTC's from all Airbag modules. If equipped with Passenger Airbag On - Off switch, read the DTC's in all switch positions. If any ACTIVE codes are present they must be resolved before diagnosing any stored codes. **WARNING: TO AVOID PERSONAL INJURY OR DEATH, TURN THE IGNITION OFF, DISCONNECT THE BATTERY AND WAIT TWO MINUTES BEFORE PROCEEDING.** Using the wiring diagram/schematic as a guide, inspect the wiring and connectors. Look for chaffed, pierced, pinched, or partially broken wires and broken, bent, pushed out, spread, corroded, or contaminated terminals. The following additional checks may assist you in identifying a possible intermittent problem. Reconnect any disconnected components and harness connector. **WARNING: TO AVOID PERSONAL INJURY OR DEATH, TURN THE IGNITION ON, THEN RECONNECT THE BATTERY.** With the DRBIII® monitor active codes as you work through the following steps. **WARNING: TO AVOID PERSONAL INJURY OR DEATH, MAINTAIN A SAFE DISTANCE FROM ALL AIRBAGS WHILE PERFORMING THE FOLLOWING STEPS.** Wiggle the wiring harness and connectors of the related airbag circuit or component. If codes are related to the Driver Airbag circuits, rotate the steering wheel from stop to stop. IF only stored codes return continue the test until the problem area has been isolated In the previous steps you have attempted to recreate the conditions responsible for setting active DTC in question. Are any ACTIVE DTCs present? Yes → Select appropriate symptom from Symptom List. No → No problem found at this time. Erase all codes before returning vehicle to customer.	All

Symptom:
PASSENGER SQUIB 2 SHORT TO GROUND

When Monitored and Set Condition:

PASSENGER SQUIB 2 SHORT TO GROUND

When Monitored: With the ignition on, the ACM monitors the resistance of the Passenger Squib 2 circuits.

Set Condition: When the ACM detects a short to ground in either Passenger Squib 2 circuits.

POSSIBLE CAUSES
PASSENGER AIRBAG SQUIB 2 CIRCUIT SHORT TO GROUND
PASSENGER SQUIB 2 LINE 1 OR LINE 2 SHORT TO GROUND
ACM, PASSENGER SQUIB 2 CIRCUIT SHORT TO GROUND
STORED CODE OR INTERMITTENT CONDITION
ACTIVE CODE PRESENT

TEST	ACTION	APPLICABILITY
1	Turn the ignition on. **NOTE: Ensure the battery is fully charged.** **NOTE: For the purpose of this test, the AECM and ORC modules will be referred to as an ACM.** SELECT ACTIVE or STORED DTC: ACM - ACTIVE DTC Go To 2 ACM - STORED DTC Go To 5 **NOTE: When reconnecting Airbag system components, the ignition must be turned off and the battery must be disconnected.**	All

PASSENGER SQUIB 2 SHORT TO GROUND — Continued

TEST	ACTION	APPLICABILITY
2	**WARNING: TO AVOID PERSONAL INJURY OR DEATH, TURN THE IGNITION OFF, DISCONNECT THE BATTERY AND WAIT TWO MINUTES BEFORE PROCEEDING.** Disconnect the Passenger Airbag connector(s). **NOTE: Check connectors - Clean and repair as necessary.** **WARNING: DO NOT PLACE AN INTACT UNDEPLOYED AIRBAG FACE DOWN ON A HARD SURFACE, THE AIRBAG WILL PROPEL INTO THE AIR IF ACCIDENTALLY DEPLOYED. FAILURE TO TAKE THE PROPER PRECAUTIONS COULD RESULT IN ACCIDENTAL AIRBAG DEPLOYMENT AND PERSONAL INJURY OR DEATH.** Connect the appropriate Load Tool to the Passenger Airbag connector(s). **WARNING: TO AVOID PERSONAL INJURY OR DEATH, TURN THE IGNITION ON, THEN RECONNECT THE BATTERY.** With the DRBIII®, read the active Airbag Control Module DTC's. Does the DRBIII® show PASSENGER SQUIB 2 CIRCUIT SHORT TO GROUND? Yes → Go To 3 No → Replace the Passenger Airbag in accordance with the Service Information. Perform __AIRBAG VERIFICATION TEST - VER 1.	All
3	**WARNING: TO AVOID PERSONAL INJURY OR DEATH, TURN THE IGNITION OFF, DISCONNECT THE BATTERY AND WAIT TWO MINUTES BEFORE PROCEEDING.** **WARNING: TO AVOID PERSONAL INJURY OR DEATH, DO NOT PLACE AN INTACT UNDEPLOYED AIRBAG FACE DOWN ON A HARD SURFACE, THE AIRBAG WILL PROPEL INTO THE AIR IF ACCIDENTALLY DEPLOYED.** Disconnect the Load Tool from the Passenger Airbag connector(s). Disconnect the Airbag Control Module connector(s). **NOTE: Check connectors - Clean repair as necessary.** Connect the appropriate Load Tool Adaptor to the Airbag Control Module connector(s). Measure the resistance of the Passenger Squib 2 Line 1 and Line 2 circuits between the Passenger Airbag Module connector and ground. Is the resistance below 10K ohms on either circuit? Yes → Repair Passenger Squib 2 Line 1 or Line 2 circuit for a short to ground. Perform __AIRBAG VERIFICATION TEST - VER 1. No → Go To 4	All
4	**WARNING: TO AVOID PERSONAL INJURY OR DEATH, TURN THE IGNITION OFF, DISCONNECT THE BATTERY AND WAIT TWO MINUTES BEFORE PROCEEDING.** **WARNING: IF THE AIRBAG CONTROL MODULE IS DROPPED AT ANY TIME, IT MUST BE REPLACED. FAILURE TO TAKE THE PROPER PRECAUTIONS COULD RESULT IN ACCIDENTAL AIRBAG DEPLOYMENT AND PERSONAL INJURY OR DEATH.** If there are no possible causes remaining, view repair. Repair: Replace the Airbag Control Module in accordance with Service Information. Perform __AIRBAG VERIFICATION TEST - VER 1.	All

PASSENGER SQUIB 2 SHORT TO GROUND — Continued

TEST	ACTION	APPLICABILITY
5	With the DRBIII®, record and erase all DTC's from all Airbag modules. If equipped with Passenger Airbag On - Off switch, read the DTC's in all switch positions. If any ACTIVE codes are present they must be resolved before diagnosing any stored codes. **WARNING: TO AVOID PERSONAL INJURY OR DEATH, TURN THE IGNITION OFF, DISCONNECT THE BATTERY AND WAIT TWO MINUTES BEFORE PROCEEDING.** Using the wiring diagram/schematic as a guide, inspect the wiring and connectors. Look for chaffed, pierced, pinched, or partially broken wires and broken, bent, pushed out, spread, corroded, or contaminated terminals. The following additional checks may assist you in identifying a possible intermittent problem. Reconnect any disconnected components and harness connector. **WARNING: TO AVOID PERSONAL INJURY OR DEATH, TURN THE IGNITION ON, THEN RECONNECT THE BATTERY.** With the DRBIII® monitor active codes as you work through the following steps. **WARNING: TO AVOID PERSONAL INJURY OR DEATH, MAINTAIN A SAFE DISTANCE FROM ALL AIRBAGS WHILE PERFORMING THE FOLLOWING STEPS.** Wiggle the wiring harness and connectors of the related airbag circuit or component. If codes are related to the Driver Airbag circuits, rotate the steering wheel from stop to stop. IF only stored codes return continue the test until the problem area has been isolated In the previous steps you have attempted to recreate the conditions responsible for setting active DTC in question. Are any ACTIVE DTCs present? Yes → Select appropriate symptom from Symptom List. No → No problem found at this time. Erase all codes before returning vehicle to customer.	All

Symptom:
POWER SUPPLY VOLTAGE LOW

When Monitored and Set Condition:

POWER SUPPLY VOLTAGE LOW

When Monitored: The ACM continuously monitors the Ignition Run - Start and Run Only circuits to guarantee that the Side Impact Sensors will have sufficient voltage to function properly.

Set Condition: Once both ignition feeds into the ACM are determined to be below 7.4 volts, with at least one above 5.5 volts. The code will remain set until at least one ignition circuit is above 8.0 volts.

POSSIBLE CAUSES
RUN OR RUN - START ACTIVE TROUBLE CODES
RUN AND RUN - START CIRCUITS VOLTAGE LOW
ACM, LOW SUPPLY VOLTAGE
STORED CODE OR INTERMITTENT CONDITION
ACTIVE CODE PRESENT

TEST	ACTION	APPLICABILITY
1	Turn the ignition on. Ensure the battery is fully charged. **NOTE: For the purpose of this test, the AECM and ORC modules will be referred to as an ACM.** Repair all Ignition Run and Run-Start circuit DTCs before performing this test. SELECT ACTIVE OR STORED DTC: ACM - ACTIVE DTC Go To 2 ACM - STORED DTC Go To 5 **NOTE: When reconnecting Airbag system components, the ignition must be turned off and the battery must be disconnected.**	All
2	With the DRBIII®, read the active DTCs. **NOTE: A Diagnostic trouble code will set if the voltage on the Ignition Run or Run - Start circuits is less than 5.5 volts** Verify that all Ignition Run and Run - Start circuits DTCs have been repaired before performing the ACTIVE Power Supply Voltage Low DTC. Any active Run or Run - Start codes? Yes → Refer to symptom list for problems related to Fused Ignition Switch Output Run and Run - Start circuits. Perform __AIRBAG VERIFICATION TEST - VER 1. No → Go To 3	All

POWER SUPPLY VOLTAGE LOW — Continued

TEST	ACTION	APPLICABILITY
3	**WARNING: TO AVOID PERSONAL INJURY OR DEATH, TURN THE IGNITION OFF, DISCONNECT THE BATTERY AND WAIT TWO MINUTES BEFORE PROCEEDING.** Disconnect the Airbag Control Module connector(s). **NOTE: Check connectors - Clean and repair as necessary.** **WARNING: IF THE AIRBAG CONTROL MODULE IS DROPPED AT ANY TIME, IT MUST BE REPLACED. FAILURE TO TAKE THE PROPER PRECAUTIONS COULD RESULT IN ACCIDENTAL AIRBAG DEPLOYMENT AND PERSONAL INJURY OR DEATH.** Connect the appropriate Load Tool ACM Adaptor to the Airbag Control Module connector. **WARNING: TO AVOID PERSONAL INJURY OR DEATH, TURN THE IGNITION ON, THEN RECONNECT THE BATTERY.** Using a 12-volt test light connected to ground, check the Run and Run - Start circuits at the ACM adaptor. The test light must illuminate brightly. Compare the brightness to that of a direct connection to the battery. Does the test light illuminate brightly on both circuits? Yes → Go To 4 No → Repair the high resistance in the Fused Ignition Switch Output Run and Run - Start circuits. Perform __AIRBAG VERIFICATION TEST - VER 1.	All
4	**WARNING: TO AVOID PERSONAL INJURY OR DEATH, TURN THE IGNITION OFF, DISCONNECT THE BATTERY AND WAIT TWO MINUTES BEFORE PROCEEDING.** **WARNING: IF THE AIRBAG CONTROL MODULE IS DROPPED AT ANY TIME, IT MUST BE REPLACED. FAILURE TO TAKE THE PROPER PRECAUTIONS COULD RESULT IN ACCIDENTAL AIRBAG DEPLOYMENT AND PERSONAL INJURY OR DEATH.** If there are no possible causes remaining, view repair. Repair Replace the Airbag Control Module in accordance with Service Instructions. Perform __AIRBAG VERIFICATION TEST - VER 1.	All

POWER SUPPLY VOLTAGE LOW — Continued

TEST	ACTION	APPLICABILITY
5	With the DRBIII®, record and erase all DTC's from all Airbag modules. If equipped with Passenger Airbag On - Off switch, read the DTC's in all switch positions. If any ACTIVE codes are present they must be resolved before diagnosing any stored codes. **WARNING: TO AVOID PERSONAL INJURY OR DEATH, TURN THE IGNITION OFF, DISCONNECT THE BATTERY AND WAIT TWO MINUTES BEFORE PROCEEDING.** Using the wiring diagram/schematic as a guide, inspect the wiring and connectors. Look for chaffed, pierced, pinched, or partially broken wires and broken, bent, pushed out, spread, corroded, or contaminated terminals. The following additional checks may assist you in identifying a possible intermittent problem. Reconnect any disconnected components and harness connector. **WARNING: TO AVOID PERSONAL INJURY OR DEATH, TURN THE IGNITION ON, THEN RECONNECT THE BATTERY.** With the DRBIII® monitor active codes as you work through the following steps. **WARNING: TO AVOID PERSONAL INJURY OR DEATH, MAINTAIN A SAFE DISTANCE FROM ALL AIRBAGS WHILE PERFORMING THE FOLLOWING STEPS.** Wiggle the wiring harness and connectors of the related airbag circuit or component. If codes are related to the Driver Airbag circuits, rotate the steering wheel from stop to stop. IF only stored codes return continue the test until the problem area has been isolated In the previous steps you have attempted to recreate the conditions responsible for setting active DTC in question. Are any ACTIVE DTCs present? Yes → Select appropriate symptom from Symptom List. No → No problem found at this time. Erase all codes before returning vehicle to customer.	All

Symptom:
RIGHT CURTAIN OR SEAT SQUIB CIRCUIT OPEN

When Monitored and Set Condition:

RIGHT CURTAIN OR SEAT SQUIB CIRCUIT OPEN

When Monitored: With the ignition on, the ACM monitors the resistance of the Right Curtain or Seat Squib circuits.

Set Condition: When the ACM detects an open circuit or high resistance on the Right Curtain or Seat Squib circuits.

POSSIBLE CAUSES
RIGHT CURTAIN OR SEAT AIRBAG CIRCUIT OPEN
RIGHT CURTAIN OR SEAT SQUIB LINE 1 OR LINE 2 CIRCUIT OPEN
ACM, RIGHT CURTAIN OR SEAT SQUIB CIRCUIT OPEN
STORED CODE OR INTERMITTENT CONDITION
ACTIVE CODE PRESENT

TEST	ACTION	APPLICABILITY
1	Turn the ignition on. **NOTE: Ensure the battery is fully charged.** **NOTE: For the purpose of this test, the AECM and ORC modules will be referred to as an ACM.** SELECT ACTIVE or STORED DTC: ACM - ACTIVE DTC Go To 2 IACM - STORED DTC Go To 5 **NOTE: When reconnecting Airbag system components, the ignition must be turned off and the battery must be disconnected.**	All

RIGHT CURTAIN OR SEAT SQUIB CIRCUIT OPEN — Continued

TEST	ACTION	APPLICABILITY
2	**WARNING: TO AVOID PERSONAL INJURY OR DEATH, TURN IGNITION OFF, DISCONNECT THE BATTERY AND WAIT TWO MINUTES BEFORE PROCEEDING.** Disconnect the Right Curtain or Seat Airbag connector. **NOTE: Check connectors - Clean and repair as necessary.** **WARNING: TO AVOID PERSONAL INJURY OR DEATH, DO NOT PLACE AN INTACT UNDEPLOYED CURTAIN AIRBAG FACE DOWN ON A HARD SURFACE, THE AIRBAG WILL PROPEL INTO THE AIR IF ACCIDENTALLY DEPLOYED.** Connect the appropriate Load Tool to the Right Curtain or Seat Airbag connector. **WARNING: TO AVOID PERSONAL INJURY OR DEATH, TURN IGNITION ON, THEN RECONNECT THE BATTERY.** With the DRBIII®, read active Airbag Control Module DTC's. Does the DRBIII® show RIGHT CURTAIN OR SEAT SQUIB CIRCUIT OPEN? Yes → Go To 3 No → Replace Right Curtain or Seat Airbag in accordance with the Service Information. Perform __AIRBAG VERIFICATION TEST - VER 1.	All
3	**WARNING: TO AVOID PERSONAL INJURY OR DEATH, TURN IGNITION OFF, DISCONNECT THE BATTERY AND WAIT TWO MINUTES BEFORE PROCEEDING.** Disconnect the Airbag Load Tool from the Right Curtain or Seat Airbag connector. Disconnect the Airbag Control Module Connector(s). **NOTE: Check connectors - Clean and repair as necessary.** Connect the appropriate Load Tool ACM Adaptor to the Airbag Control Module connector. Measure the resistance of the Right Curtain or Seat Squib Line 1 and Line 2 circuits between the Load Tool ACM adaptor and the Right Curtain or Seat Airbag connector. Is the resistance below 1.0 ohms on both circuits? Yes → Go To 4 No → Repair open or high resistance in the Right Curtain or Seat Squib Line 1 or Line 2 circuits. Perform __AIRBAG VERIFICATION TEST - VER 1.	All
4	**WARNING: TO AVOID PERSONAL INJURY OR DEATH, TURN THE IGNITION OFF, DISCONNECT THE BATTERY AND WAIT TWO MINUTES BEFORE PROCEEDING.** **WARNING: IF THE AIRBAG CONTROL MODULE IS DROPPED AT ANY TIME, IT MUST BE REPLACED. FAILURE TO TAKE THE PROPER PRECAUTIONS COULD RESULT IN ACCIDENTAL AIRBAG DEPLOYMENT AND PERSONAL INJURY OR DEATH.** If there are no possible causes remaining, view repair. Repair Replace the Airbag Control Module in accordance with the Service information. Perform __AIRBAG VERIFICATION TEST - VER 1.	All

RIGHT CURTAIN OR SEAT SQUIB CIRCUIT OPEN — Continued

TEST	ACTION	APPLICABILITY
5	With the DRBIII®, record and erase all DTC's from all Airbag modules. If equipped with Passenger Airbag On - Off switch, read the DTC's in all switch positions. If any ACTIVE codes are present they must be resolved before diagnosing any stored codes. **WARNING: TO AVOID PERSONAL INJURY OR DEATH, TURN THE IGNITION OFF, DISCONNECT THE BATTERY AND WAIT TWO MINUTES BEFORE PROCEEDING.** Using the wiring diagram/schematic as a guide, inspect the wiring and connectors. Look for chaffed, pierced, pinched, or partially broken wires and broken, bent, pushed out, spread, corroded, or contaminated terminals. The following additional checks may assist you in identifying a possible intermittent problem. Reconnect any disconnected components and harness connector. **WARNING: TO AVOID PERSONAL INJURY OR DEATH, TURN THE IGNITION ON, THEN RECONNECT THE BATTERY.** With the DRBIII® monitor active codes as you work through the following steps. **WARNING: TO AVOID PERSONAL INJURY OR DEATH, MAINTAIN A SAFE DISTANCE FROM ALL AIRBAGS WHILE PERFORMING THE FOLLOWING STEPS.** Wiggle the wiring harness and connectors of the related airbag circuit or component. If codes are related to the Driver Airbag circuits, rotate the steering wheel from stop to stop. IF only stored codes return continue the test until the problem area has been isolated In the previous steps you have attempted to recreate the conditions responsible for setting active DTC in question. Are any ACTIVE DTCs present? Yes → Select appropriate symptom from Symptom List. No → No problem found at this time. Erase all codes before returning vehicle to customer.	All

Symptom:
RIGHT CURTAIN OR SEAT SQUIB CIRCUIT SHORT

When Monitored and Set Condition:

RIGHT CURTAIN OR SEAT SQUIB CIRCUIT SHORT

When Monitored: With the ignition on, the ACM monitors the resistance between the Right Curtain or Seat Squib circuits.

Set Condition: When the ACM detects a low resistance between the Right Curtain or Seat Squib circuits.

POSSIBLE CAUSES
RIGHT CURTAIN OR SEAT SQUIB CIRCUIT SHORT
RIGHT CURTAIN OR SEAT SQUIB LINE 1 SHORT TO LINE 2
ACM, RIGHT CURTAIN OR SEAT SQUIB CIRCUIT SHORT
STORED CODE OR INTERMITTENT CONDITION
ACTIVE CODE PRESENT

TEST	ACTION	APPLICABILITY
1	Turn the ignition on. **NOTE: Ensure the battery is fully charged.** **NOTE: For the purpose of this test, the AECM and ORC modules will be referred to as an ACM.** SELECT ACTIVE or STORED DTC: ACM - ACTIVE DTC Go To 2 ACM - STORED DTC Go To 5 **NOTE: When reconnecting Airbag system components, the ignition must be turned off and the battery must be disconnected.**	All

RIGHT CURTAIN OR SEAT SQUIB CIRCUIT SHORT — Continued

TEST	ACTION	APPLICABILITY
2	**WARNING: TO AVOID PERSONAL INJURY OR DEATH, TURN THE IGNITION OFF, DISCONNECT THE BATTERY AND WAIT TWO MINUTES BEFORE PROCEEDING.** Disconnect the Right Curtain or Seat Airbag connector. **NOTE: Check connectors - Clean repair as necessary.** **WARNING: TO AVOID PERSONAL INJURY OR DEATH, DO NOT PLACE AN INTACT UNDEPLOYED CURTAIN AIRBAG FACE DOWN ON A HARD SURFACE, THE AIRBAG WILL PROPEL INTO THE AIR IF ACCIDENTALLY DEPLOYED.** Connect the appropriate Load Tool to the Right Curtain or Seat Airbag connector. **WARNING: TO AVOID PERSONAL INJURY OR DEATH, TURN IGNITION ON, THEN RECONNECT THE BATTERY.** With the DRBIII®, read active Airbag Control Module DTC's. Does the DRBIII® show RIGHT CURTAIN OR SEAT SQUIB CIRCUIT SHORT? Yes → Go To 3 No → Replace Right Curtain or Seat Airbag in accordance with the Service Information. Perform __AIRBAG VERIFICATION TEST - VER 1.	All
3	**WARNING: TO AVOID PERSONAL INJURY OR DEATH, TURN THE IGNITION OFF, DISCONNECT THE BATTERY AND WAIT TWO MINUTES BEFORE PROCEEDING.** Disconnect the Load Tool from the Right Curtain or Seat Airbag connector(s). Disconnect the Airbag Control Module connector **NOTE: Check connectors - Clean and repair as necessary.** **WARNING: TO AVOID PERSONAL INJURY OR DEATH, DO NOT PLACE AN INTACT UNDEPLOYED CURTAIN AIRBAG FACE DOWN ON A HARD SURFACE, THE AIRBAG WILL PROPEL INTO THE AIR IF ACCIDENTALLY DEPLOYED.** Connect the appropriate Load Tool ACM Adaptor to the ACM connector(s). Measure the resistance between the Right Curtain or Seat Squib Line 1 and Line 2 circuits at the Right Curtain or Seat Airbag connector. Is the resistance below 10K ohms? Yes → Repair Right Curtain or Seat Squib Line 1 short to Line 2 circuit. Perform __AIRBAG VERIFICATION TEST - VER 1. No → Go To 4	All
4	**WARNING: TO AVOID PERSONAL INJURY OR DEATH, TURN THE IGNITION OFF, DISCONNECT THE BATTERY AND WAIT TWO MINUTES BEFORE PROCEEDING.** **WARNING: IF THE AIRBAG CONTROL MODULE IS DROPPED AT ANY TIME, IT MUST BE REPLACED. FAILURE TO TAKE THE PROPER PRECAUTIONS COULD RESULT IN ACCIDENTAL AIRBAG DEPLOYMENT AND PERSONAL INJURY OR DEATH.** If there are no possible causes remaining, view repair. Repair Replace the Airbag Control Module in accordance with Service Information. Perform __AIRBAG VERIFICATION TEST - VER 1.	All

RIGHT CURTAIN OR SEAT SQUIB CIRCUIT SHORT — Continued

TEST	ACTION	APPLICABILITY
5	With the DRBIII®, record and erase all DTC's from all Airbag modules. If equipped with Passenger Airbag On - Off switch, read the DTC's in all switch positions. If any ACTIVE codes are present they must be resolved before diagnosing any stored codes. **WARNING: TO AVOID PERSONAL INJURY OR DEATH, TURN THE IGNITION OFF, DISCONNECT THE BATTERY AND WAIT TWO MINUTES BEFORE PROCEEDING.** Using the wiring diagram/schematic as a guide, inspect the wiring and connectors. Look for chaffed, pierced, pinched, or partially broken wires and broken, bent, pushed out, spread, corroded, or contaminated terminals. The following additional checks may assist you in identifying a possible intermittent problem. Reconnect any disconnected components and harness connector. **WARNING: TO AVOID PERSONAL INJURY OR DEATH, TURN THE IGNITION ON, THEN RECONNECT THE BATTERY.** With the DRBIII® monitor active codes as you work through the following steps. **WARNING: TO AVOID PERSONAL INJURY OR DEATH, MAINTAIN A SAFE DISTANCE FROM ALL AIRBAGS WHILE PERFORMING THE FOLLOWING STEPS.** Wiggle the wiring harness and connectors of the related airbag circuit or component. If codes are related to the Driver Airbag circuits, rotate the steering wheel from stop to stop. IF only stored codes return continue the test until the problem area has been isolated In the previous steps you have attempted to recreate the conditions responsible for setting active DTC in question. Are any ACTIVE DTCs present? Yes → Select appropriate symptom from Symptom List. No → No problem found at this time. Erase all codes before returning vehicle to customer.	All

Symptom:
RIGHT CURTAIN OR SEAT SQUIB SHORT TO BATTERY

When Monitored and Set Condition:

RIGHT CURTAIN OR SEAT SQUIB SHORT TO BATTERY

When Monitored: With the ignition on, the ACM monitors the voltage of the Right Curtain or Seat Squib circuits.

Set Condition: When the ACM detects voltage on the Right Curtain or Seat Squib circuits.

POSSIBLE CAUSES
RIGHT CURTAIN OR SEAT AIRBAG SHORT TO BATTERY
RIGHT CURTAIN OR SEAT SQUIB LINE 1 OR LINE 2 SHORTED TO BATTERY
ACM, RIGHT CURTAIN OR SEAT SQUIB SHORT TO BATTERY
STORED CODE OR INTERMITTENT CONDITION
ACTIVE CODE PRESENT

TEST	ACTION	APPLICABILITY
1	Turn the ignition on. **NOTE: Ensure the battery is fully charged.** **NOTE: For the purpose of this test, the AECM and ORC modules will be referred to as an ACM.** SELECT ACTIVE or STORED DTC: ACM - ACTIVE DTC Go To 2 ACM - STORED DTC Go To 5 **NOTE: When reconnecting Airbag system components, the ignition must be turned off and the battery must be disconnected.**	All

RIGHT CURTAIN OR SEAT SQUIB SHORT TO BATTERY — Continued

TEST	ACTION	APPLICABILITY
2	**WARNING: TO AVOID PERSONAL INJURY OR DEATH, TURN IGNITION OFF, DISCONNECT THE BATTERY AND WAIT TWO MINUTES BEFORE PROCEEDING.** Disconnect the Right Curtain or Seat Airbag connector(s). **NOTE: Check connectors - Clean and repair as necessary.** **WARNING: TO AVOID PERSONAL INJURY OR DEATH, DO NOT PLACE AN INTACT UNDEPLOYED CURTAIN AIRBAG FACE DOWN ON A HARD SURFACE, THE AIRBAG WILL PROPEL INTO THE AIR IF ACCIDENTALLY DEPLOYED, AND COULD RESULT IN SERIOUS OR FATAL INJURY.** Connect the appropriate Load Tool to the Right Curtain or Seat Airbag connector. **WARNING: TO AVOID PERSONAL INJURY OR DEATH, TURN IGNITION ON, THEN RECONNECT THE BATTERY.** With the DRBIII®, read active Airbag Control Module DTC's. Does the DRBIII® display RIGHT CURTAIN OR SEAT SQUIB SHORT TO BATTERY? Yes → Go To 3 No → Replace Right Curtain or Seat Airbag in accordance with the Service Information. Perform __AIRBAG VERIFICATION TEST - VER 1.	All
3	**WARNING: TO AVOID PERSONAL INJURY OR DEATH, TURN IGNITION OFF, DISCONNECT THE BATTERY AND WAIT TWO MINUTES BEFORE PROCEEDING.** Disconnect the Airbag Load Tool from the Right Curtain or Seat Squib connector. Disconnect the Airbag Control Module connector(s). **NOTE: Check connectors - Clean and repair as necessary.** Connect the appropriate Load Tool ACM Adaptor to the ACM connector. **WARNING: TO AVOID PERSONAL INJURY OR DEATH, TURN IGNITION ON, THEN RECONNECT THE BATTERY.** Measure the voltage of the Right Curtain or Seat Squib Line 1 and Line 2 circuits between the Right Curtain or Seat Airbag connector and ground. Is any voltage present on either circuit? Yes → Repair Right Curtain or Seat Squib Line 1 or Line 2 short to battery. Perform __AIRBAG VERIFICATION TEST - VER 1. No → Go To 4	All
4	**WARNING: TO AVOID PERSONAL INJURY OR DEATH, TURN THE IGNITION OFF, DISCONNECT THE BATTERY AND WAIT TWO MINUTES BEFORE PROCEEDING.** **WARNING: IF THE AIRBAG CONTROL MODULE IS DROPPED AT ANY TIME, IT MUST BE REPLACED. FAILURE TO TAKE THE PROPER PRECAUTIONS COULD RESULT IN ACCIDENTAL AIRBAG DEPLOYMENT AND PERSONAL INJURY OR DEATH.** If there are no possible causes remaining, view repair. Repair Replace the Airbag Control Module in accordance with Service Information. Perform __AIRBAG VERIFICATION TEST - VER 1.	All

RIGHT CURTAIN OR SEAT SQUIB SHORT TO BATTERY — Continued

TEST	ACTION	APPLICABILITY
5	With the DRBIII®, record and erase all DTC's from all Airbag modules. If equipped with Passenger Airbag On - Off switch, read the DTC's in all switch positions. If any ACTIVE codes are present they must be resolved before diagnosing any stored codes. **WARNING: TO AVOID PERSONAL INJURY OR DEATH, TURN THE IGNITION OFF, DISCONNECT THE BATTERY AND WAIT TWO MINUTES BEFORE PROCEEDING.** Using the wiring diagram/schematic as a guide, inspect the wiring and connectors. Look for chaffed, pierced, pinched, or partially broken wires and broken, bent, pushed out, spread, corroded, or contaminated terminals. The following additional checks may assist you in identifying a possible intermittent problem. Reconnect any disconnected components and harness connector. **WARNING: TO AVOID PERSONAL INJURY OR DEATH, TURN THE IGNITION ON, THEN RECONNECT THE BATTERY.** With the DRBIII® monitor active codes as you work through the following steps. **WARNING: TO AVOID PERSONAL INJURY OR DEATH, MAINTAIN A SAFE DISTANCE FROM ALL AIRBAGS WHILE PERFORMING THE FOLLOWING STEPS.** Wiggle the wiring harness and connectors of the related airbag circuit or component. If codes are related to the Driver Airbag circuits, rotate the steering wheel from stop to stop. IF only stored codes return continue the test until the problem area has been isolated In the previous steps you have attempted to recreate the conditions responsible for setting active DTC in question. Are any ACTIVE DTCs present? Yes → Select appropriate symptom from Symptom List. No → No problem found at this time. Erase all codes before returning vehicle to customer.	All

Symptom:
RIGHT CURTAIN OR SEAT SQUIB SHORT TO GROUND

When Monitored and Set Condition:

RIGHT CURTAIN OR SEAT SQUIB SHORT TO GROUND

When Monitored: With the ignition on, the ACM monitors the resistance of the Right Curtain or Seat Squib circuits.

Set Condition: When the ACM detects low resistance in either Right Curtain or Seat Squib circuits.

POSSIBLE CAUSES
RIGHT CURTAIN OR SEAT SQUIB SHORT TO GROUND
RIGHT CURTAIN OR SEAT SQUIB LINE 1 OR LINE 2 SHORT TO GROUND
STORED CODE OR INTERMITTENT CONDITION
ACTIVE CODE PRESENT

TEST	ACTION	APPLICABILITY
1	Turn the ignition on. **NOTE: Ensure the battery is fully charged.** **NOTE: For the purpose of this test, the AECM and ORC modules will be referred to as an ACM.** SELECT ACTIVE or STORED DTC: ACM - ACTIVE DTC Go To 2 ACM - STORED DTC Go To 4 **NOTE: When reconnecting Airbag system components, the ignition must be turned off and the battery must be disconnected.**	All

RIGHT CURTAIN OR SEAT SQUIB SHORT TO GROUND — Continued

TEST	ACTION	APPLICABILITY
2	**WARNING: TO AVOID PERSONAL INJURY OR DEATH, TURN IGNITION OFF, DISCONNECT THE BATTERY AND WAIT TWO MINUTES BEFORE PROCEEDING.** Disconnect the Right Curtain or Seat Airbag connector(s). **NOTE: Check connectors - Clean and repair as necessary.** **WARNING: TO AVOID PERSONAL INJURY OR DEATH, DO NOT PLACE AN INTACT UNDEPLOYED CURTAIN AIRBAG FACE DOWN ON A HARD SURFACE, THE AIRBAG WILL PROPEL INTO THE AIR IF ACCIDENTALLY DEPLOYED.** Connect the appropriate Load Tool to the Right Curtain or Seat Airbag connector(s). **WARNING: TO AVOID PERSONAL INJURY OR DEATH, TURN IGNITION ON, THEN RECONNECT THE BATTERY.** With the DRBIII®, read active Airbag Control Module DTC's. Does the DRBIII® display RIGHT CURTAIN OR SEAT SQUIB SHORT TO GROUND? Yes → Go To 3 No → Replace the Right Curtain or Seat Airbag in accordance with Service Instructions. Perform __AIRBAG VERIFICATION TEST - VER 1.	All
3	**WARNING: TO AVOID PERSONAL INJURY OR DEATH, TURN IGNITION OFF, DISCONNECT THE BATTERY AND WAIT TWO MINUTES BEFORE PROCEEDING.** Disconnect the Airbag Control Module connector(s). Disconnect the Load Tool from the Right Seat Airbag connector(s). **NOTE: Check connectors - Clean and repair as necessary.** **WARNING: TO AVOID PERSONAL INJURY OR DEATH, DO NOT PLACE AN INTACT UNDEPLOYED CURTAIN AIRBAG FACE DOWN ON A HARD SURFACE, THE AIRBAG WILL PROPEL INTO THE AIR IF ACCIDENTALLY DEPLOYED.** Connect the appropriate Load Tool ACM Adaptor to the ACM connector(s). Measure the resistance of the Right Curtain or Seat Squib Line 1 and Line 2 circuits between the Right Curtain or Seat Squib connector and ground. Is the resistance below 10K ohms on either circuit? Yes → Repair Right Curtain or Seat Squib Line 1 or Line 2 short to ground. Perform __AIRBAG VERIFICATION TEST - VER 1. No → Go To 4	All

RIGHT CURTAIN OR SEAT SQUIB SHORT TO GROUND — Continued

TEST	ACTION	APPLICABILITY
4	With the DRBIII®, record and erase all DTC's from all Airbag modules. If equipped with Passenger Airbag On - Off switch, read the DTC's in all switch positions. If any ACTIVE codes are present they must be resolved before diagnosing any stored codes. **WARNING: TO AVOID PERSONAL INJURY OR DEATH, TURN THE IGNITION OFF, DISCONNECT THE BATTERY AND WAIT TWO MINUTES BEFORE PROCEEDING.** Using the wiring diagram/schematic as a guide, inspect the wiring and connectors. Look for chaffed, pierced, pinched, or partially broken wires and broken, bent, pushed out, spread, corroded, or contaminated terminals. The following additional checks may assist you in identifying a possible intermittent problem. Reconnect any disconnected components and harness connector. **WARNING: TO AVOID PERSONAL INJURY OR DEATH, TURN THE IGNITION ON, THEN RECONNECT THE BATTERY.** With the DRBIII® monitor active codes as you work through the following steps. **WARNING: TO AVOID PERSONAL INJURY OR DEATH, MAINTAIN A SAFE DISTANCE FROM ALL AIRBAGS WHILE PERFORMING THE FOLLOWING STEPS.** Wiggle the wiring harness and connectors of the related airbag circuit or component. If codes are related to the Driver Airbag circuits, rotate the steering wheel from stop to stop. IF only stored codes return continue the test until the problem area has been isolated In the previous steps you have attempted to recreate the conditions responsible for setting active DTC in question. Are any ACTIVE DTCs present? Yes → Select appropriate symptom from Symptom List. No → No problem found at this time. Erase all codes before returning vehicle to customer.	All

Symptom:
VEHICLE BODY STYLE MISMATCH

When Monitored and Set Condition:

VEHICLE BODY STYLE MISMATCH

When Monitored: When the ignition is on, the ACM monitors the PCI Bus for the VIN message containing the vehicle body style from the Powertrain Control Module. The PCM transmits the VIN message every 14 seconds.

Set Condition: With ignition on, If the ACM does not receive 2 consecutive matching (vehicle Body Style) VIN messages on the bus the code will set.

POSSIBLE CAUSES
PCM, PCI COMMUNICATION FAILURE
VEHICLE BODY STYLE MISMATCH
ACM, VEHICLE BODY STYLE MISMATCH
STORED CODE OR INTERMITTENT CONDITION
ACTIVE CODE PRESENT

TEST	ACTION	APPLICABILITY
1	Turn the ignition on. Ensure the battery is fully charged. **NOTE: For the purpose of this test, the AECM and ORC modules will be referred to as an ACM.** SELECT ACTIVE or STORED DTC: ACM - ACTIVE DTC Go To 2 ACM - STORED DTC Go To 5 **NOTE: When reconnecting Airbag system components, the ignition must be turned off and the battery must be disconnected.**	All
2	Turn the ignition on. Connect the DRBIII® to the data link connector and select PASSIVE RESTRAINTS, AIRBAG, SYSTEM TEST. With the DRBIII®, read the PCM Active on the Bus:. Does the DRB show PCM ACTIVE ON THE BUS:? Yes → Go To 3 No → Refer to category COMMUNICATION CATEGORY and select the related symptom. Perform __AIRBAG VERIFICATION TEST - VER 1.	All

VEHICLE BODY STYLE MISMATCH — Continued

TEST	ACTION	APPLICABILITY
3	With the DRB select ENGINE, MISCELLANEOUS, SELECT MISC FUNCTION, and then CHECK VIN to read the Vehicle Identification Number in the Powertrain Control Module. Compare the VIN displayed on the DRB screen and the Vehicle VIN plate. Does the VIN plate and the PCM VIN match? Yes → Go To 4 No → Replace the Powertrain Control Module and program with the correct vehicle identification number. Perform __AIRBAG VERIFICATION TEST - VER 1.	All
4	**WARNING: TO AVOID PERSONAL INJURY OR DEATH, TURN THE IGNITION OFF, DISCONNECT THE BATTERY AND WAIT TWO MINUTES BEFORE PROCEEDING.** **WARNING: IF THE AIRBAG CONTROL MODULE IS DROPPED AT ANY TIME, IT MUST BE REPLACED. FAILURE TO TAKE THE PROPER PRECAUTIONS COULD RESULT IN ACCIDENTAL AIRBAG DEPLOYMENT AND PERSONAL INJURY OR DEATH.** If there are no possible causes remaining, view repair. Repair Replace the Airbag Control Module in accordance with Service Instructions. Perform __AIRBAG VERIFICATION TEST - VER 1. **NOTE: When reconnecting airbag system components the Ignition must be turned off and the Battery must be disconnected.**	All

VEHICLE BODY STYLE MISMATCH — Continued

TEST	ACTION	APPLICABILITY
5	With the DRBIII®, record and erase all DTC's from all Airbag modules. If equipped with Passenger Airbag On - Off switch, read the DTC's in all switch positions. If any ACTIVE codes are present they must be resolved before diagnosing any stored codes. **WARNING: TO AVOID PERSONAL INJURY OR DEATH, TURN THE IGNITION OFF, DISCONNECT THE BATTERY AND WAIT TWO MINUTES BEFORE PROCEEDING.** Using the wiring diagram/schematic as a guide, inspect the wiring and connectors. Look for chaffed, pierced, pinched, or partially broken wires and broken, bent, pushed out, spread, corroded, or contaminated terminals. The following additional checks may assist you in identifying a possible intermittent problem. Reconnect any disconnected components and harness connector. **WARNING: TO AVOID PERSONAL INJURY OR DEATH, TURN THE IGNITION ON, THEN RECONNECT THE BATTERY.** With the DRBIII® monitor active codes as you work through the following steps. **WARNING: TO AVOID PERSONAL INJURY OR DEATH, MAINTAIN A SAFE DISTANCE FROM ALL AIRBAGS WHILE PERFORMING THE FOLLOWING STEPS.** Wiggle the wiring harness and connectors of the related airbag circuit or component. If codes are related to the Driver Airbag circuits, rotate the steering wheel from stop to stop. IF only stored codes return continue the test until the problem area has been isolated In the previous steps you have attempted to recreate the conditions responsible for setting active DTC in question. Are any ACTIVE DTCs present? Yes → Select appropriate symptom from Symptom List. No → No problem found at this time. Erase all codes before returning vehicle to customer.	All

Symptom:
VIN MISMATCH

When Monitored and Set Condition:

VIN MISMATCH

When Monitored: At ignition on, the OCM monitors the PCI Bus for the Current VIN message.

Set Condition: This DTC will set if the OCM detects that the Orignal VIN stored in the module does not match the Current VIN broadcast on the PCI bus or if the VIN broadcast on the bus is blank.

POSSIBLE CAUSES
OCS VERIFICATION VER 1
REPAIR IS COMPLETE
PCM, PCI COMMUNICATION FAILURE
WRONG OR MISSING VIN MESSAGE
PCM VIN AND VEHICLE VIN MISMATCH
ORIGINAL AND CURRENT VIN MISMATCH
OCS SERVICE REPAIR KIT PRESENT
OCS BLADDER SERVICE KIT
WRONG OCS EQUIPMENT FOR THIS VEHICLE

TEST	ACTION	APPLICABILITY
1	Turn the ignition on. **NOTE: Ensure the battery is fully charged.** **NOTE: For the purpose of this test, the AECM and ORC modules will be referred to as an ACM.** SELECT ACTIVE or STORED DTC: OCM - ACTIVE DTC Go To 2 OCM - STORED DTC Go To 9 **NOTE: When reconnecting Airbag system components, the ignition must be turned off and the battery must be disconnected.**	All
2	Turn the ignition on. Connect the DRBIII® to the data link connector and select PASSIVE RESTRAINTS, AIRBAG, SYSTEM TEST. With the DRBIII®, read the PCM Active on the Bus:? Does the DRB show PCM ACTIVE ON THE BUS:? Yes → Go To 3 No → Refer to symptom list and select the related symptom NO RESPONSE FROM OCM or OCM BUS +/- SIGNAL OPEN.	All

VIN MISMATCH — Continued

TEST	ACTION	APPLICABILITY
3	With the DRB, select the OCS VIN VERIFICATION to view the Original VIN and Current VIN. Is the Current VIN message missing? Yes → Replace the Powertrain Control Module and program with the correct vehicle identification number. No → Go To 4	All
4	With the DRB select ENGINE, MISCELLANEOUS, SELECT MISC FUNCTION, and then CHECK VIN to read the Vehicle Identification Number in the Powertrain Control Module. Compare the VIN displayed on the DRB screen and the Vehicle VIN plate. Does the VIN plate and the PCM VIN match? Yes → Go To 5 No → Replace the Powertrain Control Module and program with the correct vehicle identification number.	All
5	With the DRB, select the OCS VIN VERIFICATION to view the Original VIN and current VIN. Does the ORIGINAL and CURRENT VIN match? Yes → Replace and program the PCM Module in accordance with the Service Information. No → Go To 6	All
6	**NOTE: The Bladder and Cushion Service Kit component are calibrated together and should not be disconnected.** **WARNING: TO AVOID PERSONAL INJURY OR DEATH. DO NOT REPLACE THE OCM TO REPAIR A VEHICLE BODY STYLE MISMATCH DTC.** **NOTE: SWAPPING A COMPLETE FRONT PASSENGER SEAT INCLUDING ALL INSTALLED OCS COMPONENTS CAN CAUSE THIS DTC.** Select Repair Options: Return original seat and OCS equippment. Go To 7 Replace Bladder Service KIT. Go To 8 Swap complete seat from another vehicle. Perform the CLEAR VIN procedure using the DRB. Perform OCS VERIFICATION TEST - VER 1.	All

VIN MISMATCH — Continued

TEST	ACTION	APPLICABILITY
7	**WARNING: TO AVOID PERSONAL INJURY OR DEATH ON VEHICLES EQUIPPED WITH THE OCCUPANT CLASSIFICATION SYSTEM (OCS), ONLY THE OCCUPANT CLASSIFICATION MODULE (OCM) AND THE PASSENGER SEAT BLADDER AND CUSHION SERVICE KIT ARE THE ONLY PARTS SERVICED.** Follow all service information for replacing the Service Kit and performing the Verification Required test over again. **NOTE: the following repair will cause Active DTCs to be set in the OCM, perform the Verification Required test to remove DTCs created by this repair.** **WARNING: TO AVOID PERSONAL INJURY OR DEATH. DO NOT REPLACE THE OCM TO REPAIR A VEHICLE BODY STYLE MISMATCH.** If there are no possible causes remaining, view repair. Repair Return original OCS equipment to this vehicle or replace Bladder Service Kit in accordance with service information. Then perform the Verification Required test to remove the DTCs created by the repair. Perform OCS VERIFICATION TEST - VER 1. **NOTE: When reconnecting Airbag system components, the ignition must be turned off and the battery must be disconnected.**	All
8	**WARNING: TO AVOID PERSONAL INJURY OR DEATH, TURN THE IGNITION OFF, DISCONNECT THE BATTERY AND WAIT TWO MINUTES BEFORE PROCEEDING.** **WARNING: IF THE OCCUPANT CLASSIFICATION MODULE IS DROPPED AT ANY TIME, IT MUST BE REPLACED. FAILURE TO TAKE THE PROPER PRECAUTIONS COULD RESULT IN ACCIDENTAL AIRBAG DEPLOYMENT AND PERSONAL INJURY OR DEATH.** **WARNING: TO AVOID PERSONAL INJURY OR DEATH ON VEHICLES EQUIPPED WITH THE OCCUPANT CLASSIFICATION SYSTEM (OCS), ONLY THE OCCUPANT CLASSIFICATION MODULE (OCM) AND THE PASSENGER SEAT BLADDER AND CUSHION SERVICE KIT ARE THE ONLY PARTS SERVICED.** Follow all service information for replacing the Service Kit and performing the Verification Required test over again. **NOTE: the following repair will cause Active DTCs to be set in the OCM, perform the Verification Required test to remove DTCs created by this repair.** If there are no possible causes remaining, view repair. Repair: Replace the OCS Bladder Service Kit in accordance with service information. Then perform the Verification Required test to remove DTC created by the repair. Perform OCS VERIFICATION TEST - VER 1. **NOTE: When reconnecting Airbag system components, the ignition must be turned off and the battery must be disconnected.**	All

VIN MISMATCH — Continued

TEST	ACTION	APPLICABILITY
9	Remove any special tools or jumper wires and reconnect all previously disconnected components - except the Battery. **WARNING: TO AVOID PERSONAL INJURY OR DEATH, TURN THE IGNITION ON, THEN RECONNECT THE BATTERY.** Connect the DRBIII® to the Data Link Connector - use the most current software available. Use the DRBIII® and erase the stored codes in all airbag system modules. Turn the ignition off, and wait 15 seconds, then turn the ignition on. Wait one minute, and read active codes and if there are none present read the stored codes. Note: Read the DTC's in ACM and OCM. If the DRBIII® shows any active or stored codes, return to the Symptom list and follow path specified for that trouble code. If no active or stored codes are present, the repair is complete. Are any active DTC present? Yes → Return to the Symptom list and follow path specified for the trouble code. No → Repair is complete.	All

Symptom:
*AIRBAG INDICATOR ON WITHOUT ACTIVE TROUBLE CODES

POSSIBLE CAUSES
AIRBAG WARNING INDICATOR ON WITHOUT ACTIVE TROUBLE CODES
INSTRUMENT CLUSTER PROBLEMS

TEST	ACTION	APPLICABILITY
1	**NOTE: Ensure the battery is fully charged.** Turn the ignition on. Make sure that all active DTC's have been repaired before performing this procedure. With the DRBIII® select the PASSIVE RESTRAINTS, AIRBAG, MONITOR DISPLAY and read the WARNING LAMP STATES. With no active DTCs, Does the LAMP REQ by ACM monitor show ON? Yes → Replace the Airbag Control Module in accordance with Service Instructions. Perform __AIRBAG VERIFICATION TEST - VER 1. No → Refer to INSTRUMENT CLUSTER CATEGORY symptom list for problems related to Instrument Cluster. Perform __AIRBAG VERIFICATION TEST - VER 1. **NOTE: When reconnecting Airbag system components, the ignition must be turned off and the battery must be disconnected.**	All

Symptom:
ALL OUTPUTS SHORT

When Monitored and Set Condition:

ALL OUTPUTS SHORT

When Monitored: Ignition in RUN and IOD fuse installed.

Set Condition: The radio has sensed a short on the output for more than 10 seconds.

POSSIBLE CAUSES
DETERMINE FAULT
FRONT SHORTED SPEAKER
REAR SHORTED SPEAKER
(+) CIRCUIT SHORTED TO GROUND
(-) CIRCUIT SHORTED TO GROUND
SPEAKER (+) & (-) CIRCUITS SHORTED TOGETHER
SPEAKER SECTION OF RADIO

TEST	ACTION	APPLICABILITY
1	Turn the ignition on. Turn the Radio on. With the DRBIII®, erase the audio DTC's. Cycle the ignition switch from off to on and wait 10 seconds. With the DRBIII®, read the audio DTC's. Does the DRBIII® display ALL OUTPUTS SHORT? Yes → Go To 2 No → Refer to the wiring diagrams located in the service information to help isolate a possible intermittent short. Perform BODY VERIFICATION TEST - VER 1.	All

ALL OUTPUTS SHORT — Continued

TEST	ACTION	APPLICABILITY
2	Turn the ignition off. **NOTE: Perform this procedure after disconnecting each front speaker connector.** Disconnect each front speaker harness connector one at a time. Turn the ignition on. Turn the radio on. With the DRBIII®, erase the audio DTCs. Cycle the ignition switch from off to on and wait 10 seconds. With the DRBIII®, read DTC's. Does the DRBIII® display ALL OUTPUTS SHORT with all the front speakers disconnected? Yes → Go To 3 No → Replace the Speaker that when disconnected the DTC did not reset. Note: On the premium system, check the I/P speaker circuits between the front door speaker and the I/P speaker for a short to ground or shorted together condition before replacing speaker. Perform BODY VERIFICATION TEST - VER 1.	All
3	Turn the ignition off. **NOTE: Perform this procedure after disconnecting each rear speaker connector.** Disconnect each rear speaker harness connector one at a time. Turn the ignition on. Turn the radio on. With the DRBIII®, erase the audio DTCs. Cycle the ignition switch from off to on and wait 10 seconds. With the DRBIII®, read DTC's. Does the DRBIII® display ALL OUTPUTS SHORT with all the rear speakers disconnected? Yes → Go To 4 No → Replace Speaker that when disconnected the DTC did not reset. Note: On the premium system, check the rear speaker ckts between the rear door speaker and the rear pillar speaker for a short to ground or shorted together condition before replacing speaker. Perform BODY VERIFICATION TEST - VER 1.	All
4	Turn the ignition off. Disconnect each front and rear speaker harness connector. Disconnect the Radio C1 harness connector. Measure the resistance between ground and each speaker (+) circuit. Is the resistance below 1000.0 (1K) ohms? Yes → Repair the speaker (+) circuit for a short to ground. Perform BODY VERIFICATION TEST - VER 1. No → Go To 5	All

ALL OUTPUTS SHORT — Continued

TEST	ACTION	APPLICABILITY
5	Turn the ignition off. Disconnect each front and rear speaker harness connector. Disconnect the Radio C1 harness connector. Measure the resistance between ground and each speaker (-) circuit. Is the resistance below 1000.0 (1K) ohms? Yes → Repair the speaker (-) circuit for a short to ground. Perform BODY VERIFICATION TEST - VER 1. No → Go To 6	All
6	Turn the ignition off. Disconnect each front and rear speaker harness connector. Disconnect the Radio C1 harness connector. Measure the resistance between each speaker (+) circuit and each speaker (-) circuit. Is the resistance below 1000.0 (1K) ohms for any of the measurements? Yes → Repair the speaker circuits shorted together. Perform BODY VERIFICATION TEST - VER 1. No → Go To 7	All
7	If there are no possible causes remaining, view repair. Repair Replace the Radio. Perform BODY VERIFICATION TEST - VER 1.	All

Symptom List:

CASSETTE PLAYER INOP
CD MECHANICAL FAILURE
NO PCI TRANSMISSION
REAR TRANSMITTER FAILURE
***AM/FM SWITCH INOPERATIVE**
***ANY STATION PRESET SWITCH INOPERATIVE**
***BALANCE INOPERATIVE**
***CD EJECT SWITCH INOPERATIVE**
***EQUALIZER INOPERATIVE**
***FADER INOPERATIVE**
***FF/RW SWITCH INOPERATIVE**
***HOUR/MINUTE SWITCHES INOPERATIVE**
***PAUSE/PLAY SWITCH INOPERATIVE**
***PWR SWITCH INOPERATIVE**
***SCAN SWITCH INOPERATIVE**
***SEEK SWITCH INOPERATIVE**
***SET SWITCH INOPERATIVE**
***TAPE EJECT SWITCH INOPERATIVE**
***TIME SWITCH INOPERATIVE**
***TUNE SWITCH INOPERATIVE**

Test Note: All symptoms listed above are diagnosed using the same tests. The title for the tests will be CASSETTE PLAYER INOP.

When Monitored and Set Condition:

CASSETTE PLAYER INOP

When Monitored: Continuously with the ignition and radio turned on.

Set Condition: The code will set if the radio detects a internal cassette failure.

CD MECHANICAL FAILURE

When Monitored: Continuously with the ignition and CD player turned on.

Set Condition: The code will set if the radio detects a CD mechanical failure.

REAR TRANSMITTER FAILURE

When Monitored: Continuously with the ignition and radio turned on.

Set Condition: The code will set if the radio detects a internal rear transmitter failure.

CASSETTE PLAYER INOP — Continued

POSSIBLE CAUSES
INTERNAL FAILURE

TEST	ACTION	APPLICABILITY
1	**NOTE: If a DTC is set, erase the DTC and attempt to reset the DTC. If DTC resets, follow this test.** This is an internal radio failure. View repair Repair Replace the Radio. Perform BODY VERIFICATION TEST - VER 1.	All

Symptom:
CD CHANGER MECHANICAL FAILURE

When Monitored and Set Condition:

CD CHANGER MECHANICAL FAILURE

When Monitored: Continuously with the ignition and CD Changer turned on.

Set Condition: The code will set if the CD Changer detects a mechanical failure.

POSSIBLE CAUSES
INTERNAL FAILURE

TEST	ACTION	APPLICABILITY
1	**NOTE: Erase DTC and attempt to reset. If DTC resets, follow this test.** This is an internal CD Changer failure. View repair Repair Replace the CD Changer. Perform BODY VERIFICATION TEST - VER 1.	All

Symptom:
CD CHANGER READ FAILURE

When Monitored and Set Condition:

CD CHANGER READ FAILURE

When Monitored: Continuously with the ignition and CD Changer turned on.

Set Condition: The code will set if a CD that is not formatted as a music CD is installed in the CD Changer.

POSSIBLE CAUSES
CD CHANGER READ FAILURE

TEST	ACTION	APPLICABILITY
1	Replace the problem CD with a good, clean, unscratched, music CD. Turn the radio on and select the good CD. With the DRBIII®, read DTC's. Does the DRBIII® display CD CHANGER READ FAILURE? Yes → Replace the CD Changer. Perform BODY VERIFICATION TEST - VER 1. No → Test Complete.	All

Symptom:
CD CHANGER TEMPERATURE HIGH

When Monitored and Set Condition:

CD CHANGER TEMPERATURE HIGH

When Monitored: Continuously with the ignition and CD Changer turned on.

Set Condition: The code will set if the temperature inside the CD Changer is above +65° C (+145° F).

POSSIBLE CAUSES
HIGH TEMPERATURE FAILURE

TEST	ACTION	APPLICABILITY
1	With the DRBIII®, erase the audio DTC's. Start the engine and allow the engine to reach normal operating temperature. If the vehicle has been in the hot sunlight or extreme cold move the vehicle indoors and open the doors to allow the inside temperature to stabilize. The CD Changer will operate between -23° C and 65° C (-10° F and +145° F). With the DRBIII®, read DTC's. Does the DRBIII® display CD CHANGER TEMPERATURE HIGH? Yes → Replace the CD Changer. Perform BODY VERIFICATION TEST - VER 1. No → Test Complete.	All

Symptom:
CD PLAY FAILURE

When Monitored and Set Condition:

CD PLAY FAILURE

When Monitored: Continuously with the ignition and the radio CD player turned on.

Set Condition: The code will set if a CD that is not formatted as a music CD or is scratched, dirty so the radio can not play the CD.

POSSIBLE CAUSES
CD PLAY FAILURE

TEST	ACTION	APPLICABILITY
1	Replace the problem CD with a good, clean, unscratched, music CD. Turn the radio CD player on. With the DRBIII®, read DTC's. Does the DRBIII® display CD PLAY FAILURE? Yes → Replace the Radio. Perform BODY VERIFICATION TEST - VER 1. No → Test Complete.	All

Symptom:
CD READ FAILURE

When Monitored and Set Condition:

CD READ FAILURE

When Monitored: Continuously with the ignition and the radio CD player turned on.

Set Condition: The code will set if a CD that is not formatted as a music CD is installed in the radio CD player.

POSSIBLE CAUSES
CD READ FAILURE

TEST	ACTION	APPLICABILITY
1	Replace the problem CD with a good, clean, unscratched, music CD. Turn the radio CD player on. With the DRBIII®, read DTC's. Does the DRBIII® display CD READ FAILURE? Yes → Replace the Radio. Perform BODY VERIFICATION TEST - VER 1. No → Test Complete.	All

Symptom:
CD TEMPERATURE HIGH

When Monitored and Set Condition:

CD TEMPERATURE HIGH

When Monitored: Continuously with the ignition and the radio CD player turned on.

Set Condition: The code will set if the temperature inside the radio CD player is above +85° C (+185° F).

POSSIBLE CAUSES
HIGH TEMPERATURE FAILURE

TEST	ACTION	APPLICABILITY
1	With the DRBIII®, erase the audio DTC's. Start the engine and allow the engine to reach normal operating temperature. If the vehicle has been in the hot sunlight or extreme cold move the vehicle indoors and open the doors to allow the inside temperature to stabilize. The radio CD player will operate between -30° C and 85° C (-22° F and +185° F). With the DRBIII®, read DTC's. Does the DRBIII® display CD TEMPERATURE HIGH? Yes → Replace the Radio. Perform BODY VERIFICATION TEST - VER 1. No → Test Complete.	All

Symptom:
GPS ANTENNA NOT CONNECTED

When Monitored and Set Condition:

GPS ANTENNA NOT CONNECTED

When Monitored: With the ignition on and the radio in navigation mode.

Set Condition: The radio does not detect a GPS antenna connection.

POSSIBLE CAUSES
BAD ANTENNA CONNECTION
ANTENNA
RADIO

TEST	ACTION	APPLICABILITY
1	Turn the ignition off. Disconnect the GPS Antenna connector. Inspect the GPS Antenna connection. Was the Antenna connection clean and tight? Yes → Go To 2 No → Repair Antenna connection as needed. Perform BODY VERIFICATION TEST - VER 1.	All
2	Refer to the Audio System in the service information and test the Antenna in accordance with the service procedure. Is the Antenna ok? Yes → Go To 3 No → Repair or replace the Antenna assembly as necessary. Perform BODY VERIFICATION TEST - VER 1.	All
3	**NOTE: Reconnect all previously disconnected components.** **NOTE: Move vehicle outside approximately 30ft from any structure.** Turn the ignition and Radio on. With the DRBIII®, erase the audio DTC's and operate the navigation system. With the DRBIII®, read the audio DTC's. Did this DTC reset? Yes → Replace the Radio in accordance with the service information. Perform BODY VERIFICATION TEST - VER 1. No → Test Complete.	All

Symptom:
LOW VOLTAGE LEVEL

When Monitored and Set Condition:

LOW VOLTAGE LEVEL

When Monitored:

Set Condition: The radio detects lower than normal voltage.

POSSIBLE CAUSES
CHECK CHARGING SYSTEM
CHECK VOLTAGE LEVEL AT RADIO
RADIO

TEST	ACTION	APPLICABILITY
1	Check the charging system in accordance with the service information. Is the charging system operating properly? Yes → Go To 2 No → Refer to the appropriate service information and repair as necessary. Perform BODY VERIFICATION TEST - VER 1.	All
2	Turn the ignition off. Disconnect the Radio harness connector. Start the engine. Measure the voltage of each Fused B+ circuit and the Fused Ignition Switch Output circuit. Is the voltage above or approximately 14 volts for each measurement? Yes → Go To 3 No → Repair the circuit for high resistance. Perform BODY VERIFICATION TEST - VER 1.	All
3	**Note: Reconnect all previously disconnected components.** Turn the ignition and Radio on. With the DRBIII®, erase the audio DTC's. Start the engine. With the DRBIII®, read the audio DTC's. Did this DTC reset? Yes → Replace the Radio. Perform BODY VERIFICATION TEST - VER 1. No → Test Complete.	All

Symptom List:

NBS OUTPUT 1 OPEN
NBS OUTPUT 2 OPEN

Test Note: All symptoms listed above are diagnosed using the same tests. The title for the tests will be NBS OUTPUT 1 OPEN.

When Monitored and Set Condition:

NBS OUTPUT 1 OPEN

When Monitored: Continuously.

Set Condition: If the FCM detects no voltage present on the NBS relay control circuit.

NBS OUTPUT 2 OPEN

When Monitored: Continuously.

Set Condition: If the FCM detects no voltage present on the NBS relay control circuit.

POSSIBLE CAUSES
CHECK DTCS
FUSED B+ CIRCUIT OPEN
NBS RELAY OPEN
NBS RELAY CONTROL CIRCUIT OPEN
FRONT CONTROL MODULE

TEST	ACTION	APPLICABILITY
1	Turn the ignition on. **NOTE: If neither DTC will reset or is active, refer to the wiring diagrams located in the service information to help isolate a possible intermittent condition.** With the DRB, read the FCM DTC's. Are both the NBS Output 1 Open and the NBS Output 2 Open DTC's set? Yes → Go To 2 No → Replace the Front Control Module in accordance with the Service Information. Perform BODY VERIFICATION TEST - VER 1.	All
2	Remove the NBS Relay from the IPM. Using a 12-volt test light connected to ground, probe cavity 86 of the NBS Relay connector. Is the test light illuminated? Yes → Go To 3 No → Check IPM Fuse #14 for an open. If OK, replace the Integrated Power Module (IPM). Perform BODY VERIFICATION TEST - VER 1.	All

NBS OUTPUT 1 OPEN — Continued

TEST	ACTION	APPLICABILITY
3	Turn the ignition off. Install a substitute relay in place of the NBS Relay. With the DRB, erase DTCs. Turn the ignition on. Turn the Radio on. With the DRB, read DTCs. Did these DTCs reset? Yes → Go To 4 No → Replace the original NBS Relay. Perform BODY VERIFICATION TEST - VER 1.	All
4	Turn the ignition off. Remove the Front Control Module from the IPM. Remove the NBS Relay from the IPM. Measure the resistance of the NBS Relay Control circuit between the FCM connector cavity 11 and the NBS Relay connector cavity 85. Is the resistance below 5.0 ohms? Yes → Replace the Front Control Module in accordance with the Service Information. Perform BODY VERIFICATION TEST - VER 1. No → Replace the power distribution center portion of the IPM in accordance with the service information. Perform BODY VERIFICATION TEST - VER 1.	All

Symptom List:

NBS OUTPUT 1 SHORT TO BATT
NBS OUTPUT 2 SHORT TO BATT

Test Note: All symptoms listed above are diagnosed using the same tests. The title for the tests will be NBS OUTPUT 1 SHORT TO BATT.

When Monitored and Set Condition:

NBS OUTPUT 1 SHORT TO BATT

When Monitored: With the ignition on and the Radio on.

Set Condition: The FCM detects excessive current when attempting to close the NBS relay.

NBS OUTPUT 2 SHORT TO BATT

When Monitored: With the ignition on and the Radio on.

Set Condition: The FCM detects excessive current when attempting to close the NBS relay.

POSSIBLE CAUSES
CHECK DTCS
NBS RELAY SHORTED
NBS RELAY CONTROL CIRCUIT SHORTED TO BATTERY
FRONT CONTROL MODULE

TEST	ACTION	APPLICABILITY
1	Turn the ignition on. Turn the Radio on. **NOTE: If neither DTC will reset or is active, refer to the wiring diagrams located in the service information to help isolate a possible intermittent condition.** With the DRB, read the FCM DTC's. Are both the NBS Output 1 Short to Batt and the NBS Output 2 Short to Batt DTC's set? Yes → Go To 2 No → Replace the Front Control Module in accordance with the Service Information. Perform BODY VERIFICATION TEST - VER 1.	All

NBS OUTPUT 1 SHORT TO BATT — Continued

TEST	ACTION	APPLICABILITY
2	Turn the ignition off. Install a substitute relay in place of the NBS Relay. With the DRB, erase DTCs. Turn the ignition on. Turn the Radio on. With the DRB, read DTCs. Did these DTCs reset? Yes → Go To 3 No → Replace the original NBS Relay. Perform BODY VERIFICATION TEST - VER 1.	All
3	Turn the ignition off. Remove the Front Control Module from the IPM. Remove the NBS Relay from the IPM. Turn the ignition on. Using a 12-volt test light connected to ground, probe the NBS Relay connector cavity 85. Is the test light illuminated? Yes → Replace the power distribution center portion of the IPM in accordance with the service information. Perform BODY VERIFICATION TEST - VER 1. No → Replace the Front Control Module in accordance with the Service Information. Perform BODY VERIFICATION TEST - VER 1.	All

Symptom:
NO ANTENNA CONNECTION

When Monitored and Set Condition:

NO ANTENNA CONNECTION

When Monitored: With the ignition on and the radio in seek up/down mode.

Set Condition: With the radio in seek mode for two minutes and the radio does not detect an antenna connection or does not receive a radio station signal.

POSSIBLE CAUSES
BAD ANTENNA CONNECTION
TEST ANTENNA
RADIO

TEST	ACTION	APPLICABILITY
1	Turn the ignition off. Disconnect the Radio Antenna connector. Inspect the Radio Antenna connection. Was the Antenna connection clean and tight? Yes → Go To 2 No → Repair Antenna connection as needed. Perform BODY VERIFICATION TEST - VER 1.	All
2	Refer to the Audio System in the service information and test the Antenna in accordance with the service procedure. Is the Antenna ok? Yes → Go To 3 No → Repair or replace the Antenna assembly as necessary. Perform BODY VERIFICATION TEST - VER 1.	All
3	**NOTE: Reconnect all previously disconnected components.** Turn the ignition and Radio on. **NOTE: Move vehicle outside approximately 30ft from any structure.** With the DRBIII®, erase the audio DTC's, put the radio in seek up and seek down mode for approximately 2 minutes before proceeding. With the DRBIII®, read the audio DTC's. Did this DTC reset? Yes → Replace the Radio. Perform BODY VERIFICATION TEST - VER 1. No → Test Complete.	All

Symptom:

NO COMMUNICATION WITH BCM

When Monitored and Set Condition:

NO COMMUNICATION WITH BCM

When Monitored: With the ignition in run, and the IOD fuse installed.

Set Condition:

POSSIBLE CAUSES
ATTEMPT TO COMMUNICATE WITH THE BCM
RADIO

TEST	ACTION	APPLICABILITY
1	Turn the ignition on. With the DRBIII®, attempt to communicate with the BCM. Was the DRBIII® able to I/D or communicate with the BCM? Yes → Go To 2 No → Refer to the Communication category for the related symptom(s). Perform BODY VERIFICATION TEST - VER 1.	All
2	With the DRBIII®, erase DTC's. Cycle the ignition switch from off to on and wait approximately 1 minute. With the DRBIII®, read DTC's. Did this DTC reset? Yes → Replace the Radio in accordance with the service information. Perform BODY VERIFICATION TEST - VER 1. No → Test Complete.	All

Symptom:
POWER AMP SHUTDOWN

When Monitored and Set Condition:

POWER AMP SHUTDOWN

When Monitored: Ignition in RUN and IOD fuse installed.

Set Condition: The radio has sensed a short on the output for more than 10 seconds.

POSSIBLE CAUSES
DETERMINE FAULT
FRONT SHORTED SPEAKER
REAR SHORTED SPEAKER
(+) CIRCUIT SHORTED TO GROUND
(-) CIRCUIT SHORTED TO GROUND
SPEAKER (+) & (-) CIRCUITS SHORTED TOGETHER
SPEAKER SECTION OF RADIO

TEST	ACTION	APPLICABILITY
1	Turn the ignition on. Turn the Radio on. With the DRBIII®, erase the audio DTC's. Cycle the ignition switch from off to on and wait 10 seconds. With the DRBIII®, read the audio DTC's. Does the DRBIII® display POWER AMP SHUTDOWN? Yes → Go To 2 No → Refer to the wiring diagrams located in the service information to help isolate a possible intermittent short. Perform BODY VERIFICATION TEST - VER 1.	All

POWER AMP SHUTDOWN — Continued

TEST	ACTION	APPLICABILITY
2	Turn the ignition off. **NOTE: Perform this procedure after disconnecting each front speaker connector.** Disconnect each front speaker harness connector one at a time. Turn the ignition on. Turn the radio on. With the DRBIII®, erase the audio DTCs. Cycle the ignition switch from off to on and wait 10 seconds. With the DRBIII®, read DTC's. Does the DRBIII® display POWER AMP SHUTDOWN with all the front speakers disconnected? Yes → Go To 3 No → Replace the Speaker that when disconnected the DTC did not reset. Note: On the premium system, check the I/P speaker circuits between the front door speaker and the I/P speaker for a short to ground or shorted together condition before replacing speaker. Perform BODY VERIFICATION TEST - VER 1.	All
3	Turn the ignition off. **NOTE: Perform this procedure after disconnecting each rear speaker connector.** Disconnect each rear speaker harness connector one at a time. Turn the ignition on. Turn the radio on. With the DRBIII®, erase the audio DTCs. Cycle the ignition switch from off to on and wait 10 seconds. With the DRBIII®, read DTC's. Does the DRBIII® display POWER AMP SHUTDOWN with all the rear speakers disconnected? Yes → Go To 4 No → Replace Speaker that when disconnected the DTC did not reset. Note: On the premium system, check the rear speaker ckts between the rear door speaker and the rear pillar speaker for a short to ground or shorted together condition before replacing speaker. Perform BODY VERIFICATION TEST - VER 1.	All
4	Turn the ignition off. Disconnect each front and rear speaker harness connector. Disconnect the Radio C1 harness connector. Measure the resistance between ground and each speaker (+) circuit. Is the resistance below 1000.0 (1K) ohms? Yes → Repair the speaker (+) circuit for a short to ground. Perform BODY VERIFICATION TEST - VER 1. No → Go To 5	All

POWER AMP SHUTDOWN — Continued

TEST	ACTION	APPLICABILITY
5	Turn the ignition off. Disconnect each front and rear speaker harness connector. Disconnect the Radio C1 harness connector. Measure the resistance between ground and each speaker (-) circuit. Is the resistance below 1000.0 (1K) ohms? Yes → Repair the speaker (-) circuit for a short to ground. Perform BODY VERIFICATION TEST - VER 1. No → Go To 6	All
6	Turn the ignition off. Disconnect each front and rear speaker harness connector. Disconnect the Radio C1 harness connector. Measure the resistance between each speaker (+) circuit and each speaker (-) circuit. Is the resistance below 1000.0 (1K) ohms for any of the measurements? Yes → Repair the speaker circuits shorted together. Perform BODY VERIFICATION TEST - VER 1. No → Go To 7	All
7	If there are no possible causes remaining, view repair. Repair Replace the Radio. Perform BODY VERIFICATION TEST - VER 1.	All

Symptom:
RADIO AND NAV GPS ANTENNA NOT CONNECTED

POSSIBLE CAUSES
BAD ANTENNA CONNECTION
ANTENNA
RADIO

TEST	ACTION	APPLICABILITY
1	Turn the ignition off. Disconnect the Antenna connectors. Inspect the Antenna connections. Was the Antenna connections clean and tight? Yes → Go To 2 No → Repair the Antenna connections as needed. Perform BODY VERIFICATION TEST - VER 1.	All
2	Refer to the Audio System in the service information and test the Antennas in accordance with the service procedure. Are the Antennas ok? Yes → Go To 3 No → Repair or replace the Antenna assemblies as necessary. Perform BODY VERIFICATION TEST - VER 1.	All
3	**NOTE: Reconnect all previously disconnected components.** **NOTE: Move vehicle outside approximately 30ft from any structure.** Turn the ignition and Radio on. With the DRBIII®, erase the audio DTC's and operate the radio and the navigation system. With the DRBIII®, read the audio DTC's. Did this DTC reset? Yes → Replace the Radio in accordance with the service information. Perform BODY VERIFICATION TEST - VER 1. No → Test Complete.	All

Symptom:
REMOTE RADIO SWITCH STUCK

When Monitored and Set Condition:

REMOTE RADIO SWITCH STUCK

When Monitored: With the ignition on.

Set Condition: The code will set if the BCM detects a stuck switch or a short to ground on the Radio Control MUX circuit for more than 10 seconds.

POSSIBLE CAUSES
INTERMITTENT CONDITION
LEFT REMOTE RADIO SWITCH SHORTED TO GROUND
RIGHT REMOTE RADIO SWITCH SHORTED TO GROUND
RADIO CONTROL MUX CIRCUIT SHORTED TO GROUND AT THE SWITCH
RADIO CONTROL MUX CIRCUIT SHORTED TO THE RETURN CIRCUIT AT THE SWITCH
CLOCKSPRING SHORTED TO GROUND
RADIO CONTROL MUX CIRCUIT SHORTED TO GROUND
RADIO CONTROL MUX CKT SHORTED TO THE RADIO CONTROL MUX RETURN CKT
BODY CONTROL MODULE

TEST	ACTION	APPLICABILITY
1	With the DRB, erase DTC's. Cycle the ignition switch from off to on and wait approximately 1 minute. With the DRB, read DTC's. Did this DTC reset? Yes → Go To 2 No → Refer to the wiring diagrams located in the service information to help isolate a possible intermittent short. Perform BODY VERIFICATION TEST - VER 1.	All
2	**WARNING: Turn the ignition off, disconnect the battery and wait 2 minutes before proceeding.** **CAUTION: Do not place an intact undeployed airbag module face down on a hard surface, the airbag module will propel into the air if accidently deployed.** Remove the Driver Airbag Module. Disconnect the Left Remote Radio Switch harness connector. Turn the ignition on, reconnect the battery. With the DRB, enter Body Computer then Sensors and monitor the Radio Control SW voltage. Is the voltage approximately 5.0 volts? Yes → Replace the Left Remote Radio Switch. Perform BODY VERIFICATION TEST - VER 1. No → Go To 3	All

REMOTE RADIO SWITCH STUCK — Continued

TEST	ACTION	APPLICABILITY
3	**WARNING: Turn the ignition off, disconnect the battery and wait 2 minutes before proceeding.** **CAUTION: Do not place an intact undeployed airbag module face down on a hard surface, the airbag module will propel into the air if accidently deployed.** Remove the Driver Airbag Module. Disconnect the Right Remote Radio Switch harness connector. Turn the ignition on, reconnect the battery. With the DRB, enter Body Computer then Sensors and monitor the Radio Control SW voltage. Is the voltage approximately 5.0 volts? Yes → Replace the Right Remote Radio Switch. Perform BODY VERIFICATION TEST - VER 1. No → Go To 4	All
4	Turn the ignition off. Disconnect the Clockspring C4 harness connector. Turn the ignition on. With the DRB, enter Body Computer then Sensors and monitor the Radio Control SW voltage. Is the voltage approximately 5.0 volts? Yes → Go To 5 No → Go To 6	All
5	Turn the ignition off. Disconnect the Clockspring C4 harness connector. **NOTE: Ensure both remote radio switches are disconnected.** Measure the resistance between ground and each Radio Control MUX circuit at the clockspring C4 harness connector. Is the resistance below 5.0 ohms? Yes → Repair the Radio Control MUX circuit for a short to ground between the clockspring and the remote radio switches. Perform BODY VERIFICATION TEST - VER 1. No → Repair the Radio Control MUX circuit for a short to the Radio Control MUX Return circuit between the clockspring and the remote radio switches. Perform BODY VERIFICATION TEST - VER 1.	All
6	Turn the ignition off. Disconnect the Clockspring C1 harness connector. Turn the ignition on. With the DRB, enter Body Computer then Sensors and monitor the Radio Control SW voltage. Is the voltage approximately 5.0 volts? Yes → Replace the Clockspring in accordance with the service information. Perform BODY VERIFICATION TEST - VER 1. No → Go To 7	All

REMOTE RADIO SWITCH STUCK — Continued

TEST	ACTION	APPLICABILITY
7	Turn the ignition off. Disconnect the Clockspring C1 harness connector. Disconnect the applicable BCM harness connector. Measure the resistance between ground and the Radio Control MUX circuit. Is the resistance below 5.0 ohms? Yes → Repair the Radio Control MUX circuit for a short to ground between the clockspring and the BCM. Perform BODY VERIFICATION TEST - VER 1. No → Go To 8	All
8	Turn the ignition off. Disconnect the Clockspring C1 harness connector. Disconnect the applicable BCM harness connectors. Measure the resistance between the Radio Control MUX circuit and the Radio Control MUX Return circuit. Is the resistance below 5.0 ohms? Yes → Repair the Radio Control MUX circuit for a short to the Radio Control MUX Return circuit between the clockspring and the BCM. Perform BODY VERIFICATION TEST - VER 1. No → Go To 9	All
9	If there are no possible causes remaining, view repair. Repair Replace the Body Control Module in accordance with the service information. Perform BODY VERIFICATION TEST - VER 1.	All

Symptom:
*REMOTE RADIO CONTROLS INOPERATIVE

POSSIBLE CAUSES
OPEN RADIO CONTROL MUX CIRCUIT AT THE SWITCH
OPEN RADIO CONTROL MUX RETURN CIRCUIT AT THE SWITCH
REMOTE RADIO SWITCH
BODY CONTROL MODULE - INTERNAL SHORT
OPEN CLOCKSPRING
OPEN RADIO CONTROL MUX CIRCUIT
OPEN RADIO CONTROL MUX RETURN CIRCUIT
BODY CONTROL MODULE - OPEN INTERNAL

TEST	ACTION	APPLICABILITY
1	**NOTE: If any DTCs are set, diagnose the DTC before continuing.** Turn the ignition and radio on. Operate both remote radio switches. Are both remote radio control switches inoperative? Yes → Go To 2 No → Go To 7	All
2	Turn the ignition off. Disconnect the Clockspring C1 harness connector. Turn the ignition on. With the DRB, enter Body Computer then Sensors and monitor the Radio Control SW voltage. Is the voltage approximately 5.0 volts? Yes → Go To 3 No → Replace the Body Control Module in accordance with the service information. Perform BODY VERIFICATION TEST - VER 1.	All
3	Turn the ignition off. Disconnect the Clockspring C1 harness connector. Turn the ignition on. Connect a jumper wire between cavity 1 and cavity 2 at the Clockspring C1 connector. With the DRB, enter Body Computer then Sensors and monitor the Radio Control SW voltage. Is the voltage approximately 0.0 volts? Yes → Check the circuits between the clockspring connector and the splice for an open. If ok, replace the Clockspring. Perform BODY VERIFICATION TEST - VER 1. No → Go To 4	All

*REMOTE RADIO CONTROLS INOPERATIVE — Continued

TEST	ACTION	APPLICABILITY
4	Turn the ignition off. Disconnect the Clockspring C1 harness connector. Disconnect the applicable BCM harness connector. Measure the resistance of the Radio Control MUX circuit between the BCM connector and the Clockspring connector. Is the resistance below 5.0 ohms? Yes → Go To 5 No → Repair the Radio Control MUX circuit for an open between the clockspring and the BCM. Perform BODY VERIFICATION TEST - VER 1.	All
5	Turn the ignition off. Disconnect the Clockspring C1 harness connector. Disconnect the applicable BCM harness connector. Measure the resistance of the Radio Control MUX Return circuit between the BCM connector and the Clockspring connector. Is the resistance below 5.0 ohms? Yes → Go To 6 No → Repair the Radio Control MUX Return circuit for an open between the clockspring and the BCM. Perform BODY VERIFICATION TEST - VER 1.	All
6	If there are no possible causes remaining, view repair. Repair Replace the Body Control Module in accordance with the service information. Perform BODY VERIFICATION TEST - VER 1.	All
7	**WARNING: Turn the ignition off, disconnect the battery and wait 2 minutes before proceeding.** **CAUTION: Do not place an intact undeployed airbag module face down on a hard surface, the airbag module will propel into the air if accidently deployed.** Remove the Driver Airbag Module. Disconnect both remote radio switch harness connectors. Turn the ignition on, reconnect the battery. Measure the voltage of the Radio Control MUX circuit at the inoperative remote radio switch. Is the voltage approximately 5.0 volts? Yes → Go To 8 No → Repair the Radio Control MUX circuit for an open between the inoperative switch and the splice. Perform BODY VERIFICATION TEST - VER 1.	All

*REMOTE RADIO CONTROLS INOPERATIVE — Continued

TEST	ACTION	APPLICABILITY
8	**WARNING: Turn the ignition off, disconnect the battery and wait 2 minutes before proceeding.** **CAUTION: Do not place an intact undeployed airbag module face down on a hard surface, the airbag module will propel into the air if accidently deployed.** Remove the Driver Airbag Module. Disconnect both remote radio switch harness connectors. Disconnect the Clockspring C4 harness connector. Measure the resistance of the Radio Control MUX Return circuit between the inoperative remote radio switch and the clockspring connector. Is the resistance below 5.0 ohms? Yes → Go To 9 No → Repair the Radio Control MUX Return circuit for an open between the inoperative switch and the clockspring. Perform BODY VERIFICATION TEST - VER 1.	All
9	If there are no possible causes remaining, view repair. Repair Replace the inoperative Remote Radio Switch. Perform BODY VERIFICATION TEST - VER 1.	All

Symptom:

AC PRESSURE TOO HIGH (ACTIVE)

When Monitored and Set Condition:

AC PRESSURE TOO HIGH (ACTIVE)

When Monitored: With the ignition on and the IOD fuse installed. Also monitored during the Cooldown Test.

Set Condition: This DTC is set if the ATC reads the A/C Pressure Sensor value and it is above 250 A/D counts.

POSSIBLE CAUSES
PCM/ECM DTC(S) PRESENT
ATC

TEST	ACTION	APPLICABILITY
1	**NOTE: Ensure that the A/C refrigerant system is properly charged per the Service Information.** Turn the ignition on. With the DRBIII®, read PCM/ECM DTCs. Does the DRBIII® display any PCM/ECM DTCs? Yes → Refer to Powertrain Diagnostic information for the related symptom(s). With the DRBIII®, reset the ATC after repair is complete. Perform BODY VERIFICATION TEST - VER 1. No → Replace the ATC. With the DRBIII®, reset the ATC after repair is complete. Perform BODY VERIFICATION TEST - VER 1.	All

Symptom List:

AC PRESSURE TOO HIGH (STORED)
DRIVER BLEND DOOR NOT RESPONDING (STORED)
DRIVER BLEND DOOR RANGE TOO LARGE (STORED)
DRIVER BLEND DOOR TRAVEL TOO SMALL (STORED)
EVAP TEMP SENSOR OPEN (STORED)
EVAP TEMP SENSOR SHORTED (STORED)
FRONT IR SENSOR AND CONTROL HEAD MISMATCH (STORED)
FRONT IR SENSOR CHANGE TOO LARGE (STORED)
FRONT IR SENSOR HIGH (STORED)
FRONT IR SENSOR LOW (STORED)
FRONT IR SENSOR NOT CALIBRATED (STORED)
FRONT KEYBOARD COMMUNICATION FAULT (STORED)
FRONT KEYBOARD FAULT (STORED)
FRONT MODE DOOR NOT RESPONDING (STORED)
FRONT MODE DOOR TRAVEL TOO LARGE (STORED)
FRONT MODE DOOR TRAVEL TOO SMALL (STORED)
PASS BLEND DOOR NOT RESPONDING (STORED)
PASS BLEND DOOR TRAVEL TOO LARGE (STORED)
PASS BLEND DOOR TRAVEL TOO SMALL (STORED)
PCI BUS SHORTED HIGH (STORED)
PCI BUS SHORTED LOW (STORED)
REAR BLEND DOOR NOT RESPONDING (STORED)
REAR BLEND DOOR RANGE TOO LARGE (STORED)
REAR BLEND DOOR TRAVEL TOO SMALL (STORED)
REAR FAN POT OPEN (STORED)
REAR FAN POT SHORTED (STORED)
REAR KEYBOARD FAULT (STORED)
REAR MODE DOOR NOT RESPONDING (STORED)
REAR MODE DOOR TRAVEL TOO LARGE (STORED)
REAR MODE DOOR TRAVEL TOO SMALL (STORED)
REAR MODE POT OPEN (STORED)
REAR MODE POT SHORTED (STORED)
RECIRC DOOR NOT RESPONDING (STORED)
RECIRC DOOR TRAVEL TOO LARGE (STORED)
RECIRC DOOR TRAVEL TOO SMALL (STORED)

Test Note: All symptoms listed above are diagnosed using the same tests. The title for the tests will be AC PRESSURE TOO HIGH (STORED).

When Monitored and Set Condition:

AC PRESSURE TOO HIGH (STORED) — Continued

AC PRESSURE TOO HIGH (STORED)

When Monitored: With the ignition on and the IOD fuse installed. Also monitored during the Cooldown Test.

Set Condition: This DTC is set if the ATC reads the A/C Pressure Sensor value and it is above 250 A/D counts.

DRIVER BLEND DOOR NOT RESPONDING (STORED)

When Monitored: With the ignition on and the IOD fuse installed.

Set Condition: This DTC is set if the ATC does not receive feedback pulses within 5 seconds of the drive voltage being applied.

DRIVER BLEND DOOR RANGE TOO LARGE (STORED)

When Monitored: With the ignition on and the IOD fuse installed.

Set Condition: This DTC is set when the ATC monitors the travel range during system initialization and the measured range is greater than expected.

DRIVER BLEND DOOR TRAVEL TOO SMALL (STORED)

When Monitored: With the ignition on and the IOD fuse installed.

Set Condition: This DTC is set when the ATC monitors the travel range during system initialization and the measured range is less than expected.

EVAP TEMP SENSOR OPEN (STORED)

When Monitored: With the ignition on and the IOD fuse installed.

Set Condition: This DTC is displayed if the ATC detects an abnormally high voltage on the evaporator temperature sensor signal.

EVAP TEMP SENSOR SHORTED (STORED)

When Monitored: With the ignition on and the IOD fuse installed.

Set Condition: This DTC is displayed if the ATC detects an abnormally low voltage on the evaporator temperature sensor signal.

FRONT IR SENSOR AND CONTROL HEAD MISMATCH (STORED)

When Monitored: With the ignition on and the IOD fuse installed.

Set Condition: This DTC is set if the correct ATC head is not paired with the correct IR module (i.e. left hand ATC head paired with right hand IR module).

FRONT IR SENSOR CHANGE TOO LARGE (STORED)

When Monitored: With the ignition on and the IOD fuse installed.

Set Condition: This DTC will set if the ATC head detects a temperature difference greater than 50 degrees between the front IR sensors.

AC PRESSURE TOO HIGH (STORED) — Continued

FRONT IR SENSOR HIGH (STORED)

When Monitored: With the ignition on and the IOD fuse installed.

Set Condition: This DTC is set if the ATC reads the Front IR Sensor value and it is above 250 A/D counts.

FRONT IR SENSOR LOW (STORED)

When Monitored: With the ignition on and the IOD fuse installed.

Set Condition: This DTC is set if the ATC reads the Front IR Sensor value and it is below 5 A/D counts.

FRONT IR SENSOR NOT CALIBRATED (STORED)

When Monitored: With the ignition on and the IOD fuse installed.

Set Condition: This DTC is set if the ATC cannot read the IR sensor values or the IR sensor values are not within a defined range of the HVAC air door motor counts.

FRONT KEYBOARD COMMUNICATION FAULT (STORED)

When Monitored: With the ignition on and the IOD fuse installed.

Set Condition: This DTC will set if there is an internal fault in the ATC head.

FRONT KEYBOARD FAULT (STORED)

When Monitored: With the ignition on and the IOD fuse installed.

Set Condition: This DTC will set if there is an internal fault in the ATC head.

FRONT MODE DOOR NOT RESPONDING (STORED)

When Monitored: With the ignition on and the IOD fuse installed.

Set Condition: This DTC is set if the ATC does not receive feedback pulses within 5 seconds of the drive voltage being applied.

FRONT MODE DOOR TRAVEL TOO LARGE (STORED)

When Monitored: With the ignition on and the IOD fuse installed.

Set Condition: This DTC is set when the ATC monitors the travel range during system initialization and the measured range is greater than expected.

FRONT MODE DOOR TRAVEL TOO SMALL (STORED)

When Monitored: With the ignition on and the IOD fuse installed.

Set Condition: This DTC is set when the ATC monitors the travel range during system initialization and the measured range is less than expected.

PASS BLEND DOOR NOT RESPONDING (STORED)

When Monitored: With the ignition on and the IOD fuse installed.

Set Condition: This DTC is set if the ATC does not receive feedback pulses within 5 seconds of the drive voltage being applied.

AC PRESSURE TOO HIGH (STORED) — Continued

PASS BLEND DOOR TRAVEL TOO LARGE (STORED)

When Monitored: With the ignition on and the IOD fuse installed.

Set Condition: This DTC is set when the ATC monitors the travel range during system initialization and the measured range is greater than expected.

PASS BLEND DOOR TRAVEL TOO SMALL (STORED)

When Monitored: With the ignition on and the IOD fuse installed.

Set Condition: This DTC is set when the ATC monitors the travel range during system initialization and the measured range is less than expected.

PCI BUS SHORTED HIGH (STORED)

When Monitored: With the ignition on.

Set Condition: This DTC is set if the ATC detects a short to voltage on the PCI Bus circuit.

PCI BUS SHORTED LOW (STORED)

When Monitored: With the ignition on.

Set Condition: This DTC is set if the ATC detects a short to ground on the PCI Bus circuit.

REAR BLEND DOOR NOT RESPONDING (STORED)

When Monitored: With the ignition on and the IOD fuse installed.

Set Condition: This DTC is set if the ATC does not receive feedback pulses within 5 seconds of the drive voltage being applied.

REAR BLEND DOOR RANGE TOO LARGE (STORED)

When Monitored: With the ignition on and the IOD fuse installed.

Set Condition: This DTC is set when the ATC monitors the travel range during system initialization and the measured range is greater than expected.

REAR BLEND DOOR TRAVEL TOO SMALL (STORED)

When Monitored: With the ignition on and the IOD fuse installed.

Set Condition: This DTC is set when the ATC monitors the travel range during system initialization and the measured range is less than expected.

REAR FAN POT OPEN (STORED)

When Monitored: With the ignition on and the IOD fuse installed.

Set Condition: This DTC is set if the ATC reads the rear blower switch value and it is above 250 A/D counts.

REAR FAN POT SHORTED (STORED)

When Monitored: With the ignition on and the IOD fuse installed.

Set Condition: This DTC is set if the ATC reads the rear fan switch value and it is below 5 A/D counts.

AC PRESSURE TOO HIGH (STORED) — Continued

REAR KEYBOARD FAULT (STORED)

When Monitored: With the ignition on and the IOD fuse installed.

Set Condition: This DTC will set if there is an internal fault in the ATC head.

REAR MODE DOOR NOT RESPONDING (STORED)

When Monitored: With the ignition on and the IOD fuse installed.

Set Condition: This DTC is set if the ATC does not receive feedback pulses within 5 seconds of the drive voltage being applied.

REAR MODE DOOR TRAVEL TOO LARGE (STORED)

When Monitored: With the ignition on and the IOD fuse installed.

Set Condition: This DTC is set when the ATC monitors the travel range during system initialization and the measured range is greater than expected.

REAR MODE DOOR TRAVEL TOO SMALL (STORED)

When Monitored: With the ignition on and the IOD fuse installed.

Set Condition: This DTC is set when the ATC monitors the travel range during system initialization and the measured range is less than expected.

REAR MODE POT OPEN (STORED)

When Monitored: With the ignition on and the IOD fuse installed.

Set Condition: This DTC is set if the ATC reads the rear mode select switch value and it is above 250 A/D counts.

REAR MODE POT SHORTED (STORED)

When Monitored: With the ignition on and the IOD fuse installed.

Set Condition: This DTC is set if the ATC reads the rear mode select switch value and it is below 5 A/D counts.

RECIRC DOOR NOT RESPONDING (STORED)

When Monitored: Ignition in RUN and IOD fuse installed.

Set Condition: This DTC is set when the ATC does not receive feedback pulses within 5 seconds of the drive voltage being applied.

RECIRC DOOR TRAVEL TOO LARGE (STORED)

When Monitored: Ignition in RUN and IOD fuse installed.

Set Condition: This DTC is set when the ATC monitors the travel range during system initialization and the measured range is greater than expected.

AC PRESSURE TOO HIGH (STORED) — Continued

RECIRC DOOR TRAVEL TOO SMALL (STORED)

When Monitored: Ignition in RUN and IOD fuse installed.

Set Condition: This DTC is set when the ATC monitors the travel range during system initialization and the measured range is less than expected.

POSSIBLE CAUSES
CHECK FOR ACTIVE ATC DTCS
AC COOLDOWN TEST FAULT MESSAGE(S) PRESENT
STORED CODES TEST COMPLETE

TEST	ACTION	APPLICABILITY
1	**NOTE: Active codes must be resolved before diagnosing stored codes.** **NOTE: Anytime a code becomes active proceed to the conclusion question.** **NOTE: If multiple codes appear, diagnose those that relate to a short circuit first.** Start the engine. Press the ATC Power switch on. Turn the front blower control to the low speed position. If equipped, turn the rear blower control to the Rear Control position. Set the Driver, Pass, and, if equipped, Rear temperature controls to 60°F (16°C). Monitor the DRBIII® for active ATC DTCs while performing the following test steps. Press the recirculation mode switch on, wait 30 seconds, and then press it off. Press the A/C mode switch on, wait 30 seconds, and then press it off. Press the rear defogger switch on, wait 30 seconds, and then press it off. Set the Driver temperature control to the max heat setting, wait 30 seconds, and then set it to the max cool setting. Repeat this step for the Pass and, if equipped, Rear temperature controls. Turn the mode control to each position for 30 seconds and then turn it back to the panel position. Press the Auto HI switch, wait 30 seconds, and then press the Auto LO switch. When function is complete, turn the front blower control to the low speed position. If equipped, on the Rear ATC Control, set the rear temperature control to the max heat setting, wait 30 seconds, and then set it to the max cool setting. If equipped, on the Rear ATC Control, turn the mode control to each position for 30 seconds. With the DRBIII® in ATC, Miscellaneous, reset the ATC. Does the DRBIII® display any active ATC DTCs? Yes → Return to the symptom list and choose the symptom(s) Perform BODY VERIFICATION TEST - VER 1. No → Go To 2	All

AC PRESSURE TOO HIGH (STORED) — Continued

TEST	ACTION	APPLICABILITY
2	**WARNING: DO NOT OPERATE THE DCHA IN AN ENCLOSED AREA SUCH AS A GARAGE THAT DOES NOT HAVE EXHAUST VENTILATION FACILITIES. ALWAYS VENT THE DCHA's EXHAUST WHEN OPERATING THE DCHA. FAILURE TO FOLLOW THESE INSTRUCTIONS CAN RESULT IN PERSONAL INJURY OR DEATH.** **NOTE: For RG vehicles equipped with a Diesel Cabin Heater Assist (DCHA), refer to Venting the DCHA's Exhaust under Cabin Heater in the General Information portion of this manual for proper exhaust venting instructions.** **NOTE: The AC Cooldown Test is actuated with the DRBIII®. The test checks A/C system performance based on evaporator temperature sensor input. It also forces the ATC to initiate a Cabin Heater Activation request when the vehicle is equipped with a DCHA.** **NOTE: The A/C related portion of this test will not run if ambient temp is below 12°C (53°F). However, the forced Cabin Heater activation will occur even if the A/C portion of this test fails to initiate because test criteria was not met.** **NOTE: The A/C related portion of this test will pass if evap temp drops 6.7°C (20°F) within 2 minutes of starting this test.** **NOTE: Only A/C related messages display on the DRBIII® after running this test. These messages will clear after paging back out of this test. Therefore, it is important to note all of the test messages before doing so.** **NOTE: Running this test will cause DELAY & Snowflake VF sgmnts on ATC to flash for 162 secs (RG w/DCHA only). If A/C related portion of this test fails, DELAY & Snowflake VF sgmnts will continue to flash until vehicle is driven more than 3 miles.** Start the engine. Press the ATC's Power switch on. Turn the Mode control to the panel position. Verify that the front blower motor and, if equipped, rear blower motor operate correctly in all speeds from each control. Diagnose and repair all blower related faults before proceeding with this test. Turn the Front Blower control to the high speed position. Set the Driver, Pass, and, if equipped, Rear temperature controls to 72°F (22°C). **CAUTION: Do not activate the A/C Cooldown Test with the engine off. Failure to follow these instructions can result in internal damage to the DCHA Heater Module.** **NOTE: Do not disconnect the vehicle's battery or the DCHA's main power supply while the DCHA is in operation or in run-down mode. Failure to follow these instructions can result in excess emissions from the DCHA during heater operation.** **NOTE: Before actuating the AC Cooldown Test, verify that the A/C compressor is not running, If the compressor is running, turn the A/C off and allow the evaporator to warm up before proceeding with the test.** **NOTE: The DCHA, if equipped, will operate for approximately 7 minutes. 3 minutes to run and 4 minutes to purge.** With the DRBIII® in ATC, Systems Tests, perform the AC Cooldown Test. Does the DRBIII® display any Cooldown Test fault messages? Yes → Return to the symptom list and choose the symptom(s) Perform BODY VERIFICATION TEST - VER 1. No → No problem found at this time. Perform BODY VERIFICATION TEST - VER 1.	All

Symptom:
COOLDOWN TEST FAILED

When Monitored and Set Condition:

COOLDOWN TEST FAILED

When Monitored: When executing the Cooldown Test.

Set Condition: This DTC is set if the A/C system is unable to bring the evaporator temperature down 6.7°C (20°F) within two minutes.

POSSIBLE CAUSES
OTHER COOLDOWN TEST FAULT MESSAGES PRESENT
ATC DTC(S) PRESENT
CHECK THE PCM/ECM FOR DTCS
A/C SYSTEM TESTING

TEST	ACTION	APPLICABILITY
1	**CAUTION: The work area ambient temperature must be above 15.6°C (60°F) to test A/C system operation.** Are any other fault messages displayed with the Cooldown Test Failed message? Yes → Return to the symptom list and choose the symptom(s). After the repair is complete, rerun the Cooldown Test. Perform BODY VERIFICATION TEST - VER 1. No → Go To 2	All
2	**CAUTION: The work area ambient temperature must be above 15.6°C (60°F) to test A/C system operation.** Turn the ignition on. With the DRBIII®, read ATC DTCs. Does the DRBIII® display any ATC DTCs? Yes → Return to the symptom list and choose the symptom(s). After the repair is complete, rerun the Cooldown Test. Perform BODY VERIFICATION TEST - VER 1. No → Go To 3	All

COOLDOWN TEST FAILED — Continued

TEST	ACTION	APPLICABILITY
3	**CAUTION: The work area ambient temperature must be above 15.6°C (60°F) to test A/C system operation.** Turn the ignition on. With the DRBIII®, check the PCM/ECM for DTCs. Are any PCM/ECM DTCs present? Yes → Refer to Powertrain Diagnostic information for the related symptom(s). After the repair is complete, rerun the Cooldown Test. Perform BODY VERIFICATION TEST - VER 1. No → Refer to the Service Information for additional Cooldown Test related diagnostic information and testing procedures. After the repair is complete, rerun the Cooldown Test. Perform BODY VERIFICATION TEST - VER 1.	All

Symptom:
DRIVER BLEND DOOR NOT RESPONDING (ACTIVE)

When Monitored and Set Condition:

DRIVER BLEND DOOR NOT RESPONDING (ACTIVE)

When Monitored: With the ignition on and the IOD fuse installed.

Set Condition: This DTC is set if the ATC does not receive feedback pulses within 5 seconds of the drive voltage being applied.

POSSIBLE CAUSES
DRIVER BLEND DOOR DRIVER CIRCUIT (A) SHORTED TO GROUND
DRIVER BLEND DOOR DRIVER CIRCUIT (B) SHORTED TO GROUND
DRIVER BLEND DOOR DRIVER CIRCUITS (A) AND (B) SHORTED TOGETHER
DRIVER BLEND DOOR DRIVER CIRCUIT (A) OPEN
DRIVER BLEND DOOR DRIVER CIRCUIT (B) OPEN
ATC
DRIVER BLEND DOOR ACTUATOR

TEST	ACTION	APPLICABILITY
1	Turn the ignition off. Disconnect the Driver Blend Door Actuator harness connector. Disconnect the ATC C1 harness connector. Measure the resistance between ground and the Driver Blend Door Driver (A) circuit. Is the resistance above 100k ohms? Yes → Go To 2 No → Repair the Driver Blend Door Driver (A) circuit for a short to ground. With the DRBIII®, reset the ATC after repair is complete. Perform BODY VERIFICATION TEST - VER 1.	All
2	Turn the ignition off. Disconnect the Driver Blend Door Actuator harness connector. Disconnect the ATC C1 harness connector. Measure the resistance between ground and the Driver Blend Door Driver (B) circuit. Is the resistance above 100k ohms? Yes → Go To 3 No → Repair the Driver Blend Door Driver (B) circuit for a short to ground. With the DRBIII®, reset the ATC after repair is complete. Perform BODY VERIFICATION TEST - VER 1.	All

DRIVER BLEND DOOR NOT RESPONDING (ACTIVE) — Continued

TEST	ACTION	APPLICABILITY
3	Turn the ignition off. Disconnect the Driver Blend Door Actuator harness connector. Disconnect the ATC C1 harness connector. Measure the resistance between the Driver Blend Door Driver (A) and (B) circuits. Is the resistance above 100k ohms? Yes → Go To 4 No → Repair the Driver Blend Door Driver (A) and (B) circuits for a short together. With the DRBIII®, reset the ATC after repair is complete. Perform BODY VERIFICATION TEST - VER 1.	All
4	Turn the ignition off. Disconnect the Driver Blend Door Actuator harness connector. Disconnect the ATC C1 harness connector. Measure the resistance of the Driver Blend Door Driver (A) circuit. Is the resistance below 5.0 ohms? Yes → Go To 5 No → Repair the Driver Blend Door Driver (A) circuit for an open. With the DRBIII®, reset the ATC after repair is complete. Perform BODY VERIFICATION TEST - VER 1.	All
5	Turn the ignition off. Disconnect the Driver Blend Door Actuator harness connector. Disconnect the ATC C1 harness connector. Measure the resistance of the Driver Blend Door Driver (B) circuit. Is the resistance below 5.0 ohms? Yes → Go To 6 No → Repair the Driver Blend Door Driver (B) circuit for an open. With the DRBIII®, reset the ATC after repair is complete. Perform BODY VERIFICATION TEST - VER 1.	All
6	Turn the ignition off. Disconnect the ATC C1 harness connector. Measure the resistance between the Driver Blend Door Driver (A) and (B) circuits. Is the resistance between 26.0 and 46.0 ohms? Yes → Replace the ATC. With the DRBIII®, reset the ATC after repair is complete. Perform BODY VERIFICATION TEST - VER 1. No → Go To 7	All
7	If there are no possible causes remaining, view repair. Repair Replace the Driver Blend Door Actuator. With the DRBIII®, reset the ATC after repair is complete. Perform BODY VERIFICATION TEST - VER 1.	All

Symptom:
DRIVER BLEND DOOR TRAVEL TOO LARGE (ACTIVE)

When Monitored and Set Condition:

DRIVER BLEND DOOR TRAVEL TOO LARGE (ACTIVE)

When Monitored: With the ignition on and the IOD fuse installed.

Set Condition: This DTC is set when the ATC monitors the travel range during system initialization and the measured range is greater than expected.

POSSIBLE CAUSES
CHECK THE ATC FOR DTCS
DRIVER BLEND DOOR ACTUATOR
DRIVER BLEND DOOR LINKAGE
ATC

TEST	ACTION	APPLICABILITY
1	Turn the ignition on. With the DRB, read the active ATC DTCs. Is the DRIVER BLEND DOOR NOT RESPONDING DTC set? Yes → Return to the symptom list and choose the symptom. With the DRBIII®, reset the ATC after repair is complete. Perform BODY VERIFICATION TEST - VER 1. No → Go To 2	All
2	Turn the ignition off. Remove the Driver Blend Door Actuator. By hand, attempt to rotate the driver blend door motor in both directions. Did the blend door actuator turn in either direction? Yes → Replace the Driver Blend Door Actuator. With the DRBIII®, reset the ATC after repair is complete. Perform BODY VERIFICATION TEST - VER 1. No → Go To 3	All
3	Remove the Driver Blend Door Actuator. Rotate the blend door (door only). Note: This should rotate approximately 45 degrees from stop to stop. Inspect the blend door linkage for excessive wear or missing linkage. Were any mechanical problems found? Yes → Repair or replace the driver blend door/linkage as necessary. With the DRBIII®, reset the ATC after repair is complete. Perform BODY VERIFICATION TEST - VER 1. No → Replace the ATC. With the DRBIII®, reset the ATC after repair is complete. Perform BODY VERIFICATION TEST - VER 1.	All

Symptom:
DRIVER BLEND DOOR TRAVEL TOO SMALL (ACTIVE)

When Monitored and Set Condition:

DRIVER BLEND DOOR TRAVEL TOO SMALL (ACTIVE)

When Monitored: With the ignition on and the IOD fuse installed.

Set Condition: This DTC is set when the ATC monitors the travel range during system initialization and the measured range is less than expected.

POSSIBLE CAUSES
CHECK THE ATC FOR DTCS
ATC
OBSTRUCTED BLEND DOOR
DRIVER BLEND DOOR ACTUATOR

TEST	ACTION	APPLICABILITY
1	Turn the ignition on. With the DRB, read the active ATC DTCs. Is the DRIVER BLEND DOOR NOT RESPONDING DTC set? Yes → Return to the symptom list and choose the symptom. With the DRBIII®, reset the ATC after repair is complete. Perform BODY VERIFICATION TEST - VER 1. No → Go To 2	All
2	Turn the ignition off. Disconnect the Driver Blend Door Actuator harness connector. Connect a 12-volt Test Light between the Driver Blend Door Actuator harness connector cavities. Turn the ignition on. While monitoring the test light, press the driver blend control to change the setting from lo to hi. **Note: Observe test light for approximately 30 seconds.** Does the test light start to flash and stay flashing? Yes → Go To 3 No → Replace the ATC. With the DRBIII®, reset the ATC after repair is complete. Perform BODY VERIFICATION TEST - VER 1.	All

DRIVER BLEND DOOR TRAVEL TOO SMALL (ACTIVE) — Continued

TEST	ACTION	APPLICABILITY
3	Remove the Driver Blend Door Actuator. Rotate the blend door (door only). Note: This should rotate approximately 45 degrees from stop to stop. Does the blend door move smoothly in both directions? Yes → Replace the Driver Blend Door Actuator. With the DRBIII®, reset the ATC after repair is complete. Perform BODY VERIFICATION TEST - VER 1. No → Repair or replace the driver blend door as necessary. With the DRBIII®, reset the ATC after repair is complete. Perform BODY VERIFICATION TEST - VER 1.	All

Symptom:
EEPROM CHECKSUM ERROR (ACTIVE)

When Monitored and Set Condition:

EEPROM CHECKSUM ERROR (ACTIVE)

When Monitored: Ignition in RUN and IOD fuse installed after a battery disconnect.

Set Condition: This DTC is set if the calculated check sum does not match the stored value.

POSSIBLE CAUSES
ATC - EEPROM CHECKSUM ERROR

TEST	ACTION	APPLICABILITY
1	When this code is present, the ATC must be replaced. View repair. Repair Replace the ATC. With the DRBIII®, reset the ATC after repair is complete. Perform BODY VERIFICATION TEST - VER 1.	All

Symptom:

EVAP TEMP SENSOR OPEN (ACTIVE)

When Monitored and Set Condition:

EVAP TEMP SENSOR OPEN (ACTIVE)

When Monitored: With the ignition on and the IOD fuse installed. Also, during the Cooldown Test.

Set Condition: This DTC is displayed if the ATC detects an abnormally high voltage on the evaporator temperature sensor signal. Evap Temp Sensor Open is also displayed as a Cooldown Test Message if the ATC detects an abnormally high voltage on the evaporator temperature sensor signal during the Cooldown Test.

POSSIBLE CAUSES
EVAPORATOR TEMPERATURE SENSOR SIGNAL CIRCUIT SHORTED TO VOLTAGE
EVAPORATOR TEMP SENSOR SIGNAL CKT SHORTED TO BLOWER MOTOR CONTROL CKT
EVAP TEMP SENSOR SIGNAL CKT SHORTED TO REAR BLOWER MOTOR CONTROL CKT
ATC
ATC
EVAPORATOR TEMPERATURE SENSOR SIGNAL CIRCUIT OPEN
SENSOR GROUND CIRCUIT OPEN
EVAPORATOR TEMPERATURE SENSOR

TEST	ACTION	APPLICABILITY
1	Turn the ignition off. Disconnect the ATC C2 harness connector. Turn the ignition on. Measure the voltage of the Evaporator Temperature Sensor Signal circuit. Is there any voltage present? Yes → Repair the Evaporator Temperature Sensor Signal circuit for a short to voltage. With the DRBIII®, reset the ATC after repair is complete. Perform BODY VERIFICATION TEST - VER 1. No → Go To 2	All
2	Turn the ignition off. Disconnect the ATC C2 harness connector. Measure the resistance between the Evaporator Temperature Sensor Signal circuit and the Blower Motor Control circuit. Is the resistance below 10K ohms? Yes → Repair the Evaporator Temperature Sensor Signal circuit for a short to the Blower Motor Control circuit. With the DRBIII®, reset the ATC after repair is complete. Perform BODY VERIFICATION TEST - VER 1. No → Go To 3	All

EVAP TEMP SENSOR OPEN (ACTIVE) — Continued

TEST	ACTION	APPLICABILITY
3	Turn the ignition off. Disconnect the ATC C2 harness connector. Measure the resistance between the Evaporator Temperature Sensor Signal circuit and the Rear Blower Motor Control circuit. Is the resistance below 10K ohms? Yes → Repair the Evaporator Temperature Sensor Signal circuit for a short to the Rear Blower Motor Control circuit. With the DRBIII®, reset the ATC after repair is complete. Perform BODY VERIFICATION TEST - VER 1. No - For RS Vehicles Go To 4 No - For RG Vehicles Go To 5	All
4	Turn the ignition off. Disconnect the ATC C2 harness connector. Measure the resistance between the Evaporator Temperature Sensor Signal circuit and the Sensor Ground circuit. The approximate circuit resistance should be: **NOTE: The following specifications are for RS vehicles only.** 1,468 ohms @ 40°C (104°F). 1,800 ohms @ 35°C (95°F). 2,221 ohms @ 30°C (86°F). 2,757 ohms @ 25°C (77°F). 3,443 ohms @ 20°C (68°F). 4,330 ohms @ 15°C (59°F). 5,485 ohms @ 10°C (50°F). 7,354 ohms @ 4°C (39°F). 8,130 ohms @ 2°C (36°F). Is the resistance within the specifications? Yes → Replace the ATC in accordance with the Service Information. With the DRBIII®, reset the ATC after repair is complete. Perform BODY VERIFICATION TEST - VER 1. No → Go To 6	All

EVAP TEMP SENSOR OPEN (ACTIVE) — Continued

TEST	ACTION	APPLICABILITY
5	Turn the ignition off. Disconnect the ATC C2 harness connector. Measure the resistance between the Evaporator Temperature Sensor Signal circuit and the Sensor Ground circuit. The approximate circuit resistance should be: **NOTE: The following specifications are for RG vehicles only.** 5,900 ohms @ 38°C (100°F). 6,600 ohms @ 35°C (95°F). 7,400 ohms @ 32°C (90°F). 8,300 ohms @ 29°C (85°F). 9,400 ohms @ 27°C (80°F). 10,600 ohms @ 24°C (75°F). 11,900 ohms @ 21°C (70°F). 13,500 ohms @ 18°C (65°F). 15,300 ohms @ 16°C (60°F). 17,500 ohms @ 13°C (55°F). 19,900 ohms @ 10°C (50°F). 22,800 ohms @ 7°C (45°F). 26,100 ohms @ 4°C (40°F). 30,000 ohms @ 2°C (35°F). 34,600 ohms @ -1°C (30°F). Is the resistance within the specifications? Yes → Replace the ATC in accordance with the Service Information. With the DRBIII®, reset the ATC after repair is complete. Perform BODY VERIFICATION TEST - VER 1. No → Go To 6	All
6	Turn the ignition off. Disconnect the ATC C2 harness connector. Disconnect the in-line C202 harness connector. Measure the resistance of the Evaporator Temperature Sensor Signal circuit between the ATC C2 harness connector and the in-line C202 harness connector. Is the resistance below 5.0 ohms? Yes → Go To 7 No → Repair the Evaporator Temperature Sensor Signal circuit between the ATC C2 harness connector and the in-line C202 harness connector (HVAC side) for an open. With the DRBIII®, reset the ATC after repair is complete. Perform BODY VERIFICATION TEST - VER 1.	All

EVAP TEMP SENSOR OPEN (ACTIVE) — Continued

TEST	ACTION	APPLICABILITY
7	Turn the ignition off. Disconnect the ATC C2 harness connector. Disconnect the in-line C202 harness connector. Measure the resistance of the Sensor Ground circuit between the ATC C2 harness connector and the in-line C202 harness connector. Is the resistance below 5.0 ohms? Yes → Check the wiring harness between the in-line C202 harness connector (plenum side) and the Evap Temp Sensor for an open. Repair as necessary. If Ok, replace the Evaporator Temperature Sensor. With the DRBIII®, reset the ATC after repair is complete. Perform BODY VERIFICATION TEST - VER 1. No → Repair the Sensor Ground circuit between the ATC C2 harness connector and the in-line C202 harness connector (HVAC side) for an open. With the DRBIII®, reset the ATC after repair is complete. Perform BODY VERIFICATION TEST - VER 1.	All

Symptom:
EVAP TEMP SENSOR SHORTED (ACTIVE)

When Monitored and Set Condition:

EVAP TEMP SENSOR SHORTED (ACTIVE)

When Monitored: With the ignition on and the IOD fuse installed. Also, during the Cooldown Test.

Set Condition: This DTC is displayed if the ATC detects an abnormally low voltage on the evaporator temperature sensor signal. Evap Temp Sensor Shorted is also displayed as a Cooldown Test Message if the ATC detects an abnormally low voltage on the evaporator temperature sensor signal during the Cooldown Test.

POSSIBLE CAUSES
EVAPORATOR TEMPERATURE SENSOR
EVAPORATOR TEMPERATURE SENSOR SIGNAL CIRCUIT SHORT TO GROUND
EVAPORATOR TEMPERATURE SENSOR SIGNAL CIRCUIT SHORT TO SENSOR GROUND CIRCUIT
ATC

TEST	ACTION	APPLICABILITY
1	Turn the ignition off. Disconnect the in-line C202 harness connector. Turn the ignition on. With the DRBIII® in Automatic Temperature Control, monitor Active DTCs. Does the DRBIII® display: Evap Sensor Open? Yes → Check the Evap Temp Sensor Signal circuit between the in-line C202 harness connector (plenum side) and the Evap Temp Sensor for a short to ground. Repair as necessary. If Ok, replace the Evaporator Temperature Sensor. With the DRBIII®, reset the ATC after repair is complete. Perform BODY VERIFICATION TEST - VER 1. No → Go To 2	All
2	Turn the ignition off. Disconnect the ATC C2 harness connector. Disconnect the in-line C202 harness connector. Measure the resistance between ground and the Evaporator Temperature Sensor Signal circuit (HVAC side). Is the resistance above 100k ohms? Yes → Go To 3 No → Repair the Evaporator Temperature Sensor Signal circuit between the ATC C2 harness connector and the in-line C202 harness connector (HVAC side) for a short to ground. With the DRBIII®, reset the ATC after repair is complete. Perform BODY VERIFICATION TEST - VER 1.	All

EVAP TEMP SENSOR SHORTED (ACTIVE) — Continued

TEST	ACTION	APPLICABILITY
3	Turn the ignition off. Disconnect the ATC C2 harness connector. Disconnect the in-line C202 harness connector. Measure the resistance between the Evaporator Temperature Sensor Signal circuit and the Sensor Ground circuit (HVAC side). Is the resistance above 100k ohms? Yes → Replace the ATC. With the DRBIII®, reset the ATC after repair is complete. Perform BODY VERIFICATION TEST - VER 1. No → Repair the Evaporator Temperature Sensor Signal circuit between the ATC C2 harness connector and the in-line C202 harness connector (HVAC side) for a short to Sensor Ground. With the DRBIII®, reset the ATC after repair is complete. Perform BODY VERIFICATION TEST - VER 1.	All

Symptom List:

FRONT AND REAR BLOWER OUTPUT 1 OPEN
FRONT AND REAR BLOWER OUTPUT 2 OPEN

Test Note: All symptoms listed above are diagnosed using the same tests. The title for the tests will be FRONT AND REAR BLOWER OUTPUT 1 OPEN.

When Monitored and Set Condition:

FRONT AND REAR BLOWER OUTPUT 1 OPEN

When Monitored: Continuously.

Set Condition: If the FCM detects no voltage present on the Front/Rear Blower Motor Relay Control circuit.

FRONT AND REAR BLOWER OUTPUT 2 OPEN

When Monitored: Continuously.

Set Condition: If the FCM detects no voltage present on the Front/Rear Blower Motor Relay Control circuit.

POSSIBLE CAUSES
FRONT & REAR BLOWER OUTPUT 1/2 OPEN

TEST	ACTION	APPLICABILITY
1	View repair. Repair Refer to symptom Front and Rear Blower Output 1 Open or symptom Front and Rear Blower Output 2 Open in the Heating & A/C category. Perform BODY VERIFICATION TEST - VER 1.	All

Symptom List:

FRONT AND REAR BLOWER OUTPUT 1 SHORT TO BATT
FRONT AND REAR BLOWER OUTPUT 2 SHORT TO BATT

Test Note: All symptoms listed above are diagnosed using the same tests. The title for the tests will be FRONT AND REAR BLOWER OUTPUT 1 SHORT TO BATT.

When Monitored and Set Condition:

FRONT AND REAR BLOWER OUTPUT 1 SHORT TO BATT

When Monitored: With the ignition on.

Set Condition: The FCM detects excessive current when attempting to close the Front/ Rear Blower Motor Relays.

FRONT AND REAR BLOWER OUTPUT 2 SHORT TO BATT

When Monitored: With the ignition on.

Set Condition: The FCM detects excessive current when attempting to close the Front/ Rear Blower Motor Relays.

POSSIBLE CAUSES
FRONT & REAR BLOWER OUTPUT 1/2 SHORT TO BATT

TEST	ACTION	APPLICABILITY
1	View repair. Repair Refer to symptom Front and Rear Blower Output 1 Short to Batt or symptom Front and Rear Blower Output 2 Short to Batt in the Heating & A/C category. Perform BODY VERIFICATION TEST - VER 1.	All

Symptom List:

FRONT IR SENSOR AND CONTROL HEAD MISMATCH (ACTIVE)
FRONT IR SENSOR CHANGE TOO LARGE (ACTIVE)
FRONT IR SENSOR HIGH (ACTIVE)
FRONT IR SENSOR LOW (ACTIVE)

Test Note: All symptoms listed above are diagnosed using the same tests. The title for the tests will be FRONT IR SENSOR AND CONTROL HEAD MISMATCH (ACTIVE).

When Monitored and Set Condition:

FRONT IR SENSOR AND CONTROL HEAD MISMATCH (ACTIVE)

When Monitored: With the ignition on and the IOD fuse installed.

Set Condition: This DTC is set if the correct ATC head is not paired with the correct IR module (i.e. left hand ATC head paired with right hand IR module).

FRONT IR SENSOR CHANGE TOO LARGE (ACTIVE)

When Monitored: With the ignition on and the IOD fuse installed.

Set Condition: This DTC will set if the ATC head detects a temperature difference greater than 50 degrees between the front IR sensors.

FRONT IR SENSOR HIGH (ACTIVE)

When Monitored: With the ignition on and the IOD fuse installed.

Set Condition: This DTC is set if the ATC reads the Front IR Sensor value and it is above 250 A/D counts.

FRONT IR SENSOR LOW (ACTIVE)

When Monitored: With the ignition on and the IOD fuse installed.

Set Condition: This DTC is set if the ATC reads the Front IR Sensor value and it is below 5 A/D counts.

POSSIBLE CAUSES
ATC REMOTE SENSOR

TEST	ACTION	APPLICABILITY
1	This DTC indicates a fault in the ATC Remote Sensor. View repair. Repair Replace the ATC Remote Sensor. With the DRBIII®, reset the ATC after repair is complete. Perform BODY VERIFICATION TEST - VER 1.	All

Symptom List:

FRONT IR SENSOR NOT CALIBRATED (ACTIVE)
FRONT KEYBOARD FAULT (ACTIVE)

Test Note: All symptoms listed above are diagnosed using the same tests. The title for the tests will be FRONT IR SENSOR NOT CALIBRATED (ACTIVE).

When Monitored and Set Condition:

FRONT IR SENSOR NOT CALIBRATED (ACTIVE)

When Monitored: With the ignition on and the IOD fuse installed.

Set Condition: This DTC is set if the ATC cannot read the IR sensor values or the IR sensor values are not within a defined range of the HVAC air door motor counts.

FRONT KEYBOARD FAULT (ACTIVE)

When Monitored: With the ignition on and the IOD fuse installed.

Set Condition: This DTC will set if there is an internal fault in the ATC head.

POSSIBLE CAUSES
ATC - PROTECTED IGNITION CIRCUIT FAULT
KDB 2 CLOCK CIRCUIT SHORTED TO VOLTAGE
KDB 2 DATA CIRCUIT SHORTED TO GROUND
KDB 2 DATA CIRCUIT SHORTED TO VOLTAGE
PROTECTED IGNITION CIRCUIT OPEN
SENSOR RETURN CIRCUIT OPEN
KDB 2 CLOCK CIRCUIT SHORTED TO GROUND
KDB 2 DATA CIRCUIT OPEN
ATC - KDB 2 DATA CIRCUIT FAULT
ATC - SENSOR RETURN CIRCUIT FAULT
KDB 2 CLOCK CIRCUIT OPEN
ATC - KDB 2 CLOCK CIRCUIT FAULT
ATC REMOTE SENSOR

FRONT IR SENSOR NOT CALIBRATED (ACTIVE) — Continued

TEST	ACTION	APPLICABILITY
1	Turn the ignition off. Disconnect the ATC Remote Sensor harness connector. Turn the ignition on. Measure the voltage of the Protected Ignition circuit. Is the voltage above 10.0 volts? Yes → Go To 2 No → Go To 16	All
2	Turn the ignition off. Disconnect the ATC Remote Sensor harness connector. Turn the ignition on. Measure the voltage of the KDB 2 Data circuit. Is the voltage above 10.0 volts? Yes → Go To 3 No → Go To 13	All
3	Turn the ignition off. Disconnect the ATC Remote Sensor harness connector. Disconnect the ATC C3 harness connector. Turn the ignition on. Measure the voltage of the KDB 2 Data circuit. Is the voltage above 1.0 volt? Yes → Repair the KDB 2 Data circuit for a short to voltage. With the DRBIII®, reset the ATC after repair is complete. Perform BODY VERIFICATION TEST - VER 1. No → Go To 4	All
4	Turn the ignition off. Disconnect the ATC Remote Sensor harness connector. Use Scope input cable CH7058, Cable to Probe adapter CH7062, and the red and black test probes. Connect the scope input cable to the channel one connector on the DRB. Attach the red and black leads and the cable to probe adapter to the scope input cable. Select Lab Scope. Select Live. Select 12 volt square wave. Press F2 for Scope. Press F2 and use the arrows to set the voltage range to 20 volts, the Offset to 4.0, and the Probe to x10. Press F2 again and set the divisions to 40ms/Div, then press F2 again when complete. Connect the Black lead to the chassis ground. Connect the Red lead to the KDB 2 Clock circuit in the ATC Remote Sensor harness connector. Turn the ignition on. Observe the voltage display on the DRB Lab Scope. **NOTE: The lab scope pattern should look similar to the example given in the support material and cycle from approximately 0 volts to 8.0 volts.** Did the lab scope pattern and voltage react as noted above? Yes → Go To 5 No → Go To 9	All

FRONT IR SENSOR NOT CALIBRATED (ACTIVE) — Continued

TEST	ACTION	APPLICABILITY
5	Turn the ignition off. Disconnect the ATC Remote Sensor harness connector. Measure the resistance between ground and the Sensor Return circuit. Is the resistance below 10 ohms? Yes → Go To 6 No → Go To 7	All
6	If there are no possible causes remaining, view repair. Repair Replace the ATC Remote Sensor. With the DRBIII®, reset the ATC after repair is complete. Perform BODY VERIFICATION TEST - VER 1.	All
7	Turn the ignition off. Disconnect the ATC Remote Sensor harness connector. Measure the resistance of the Sensor Return circuit. Is the resistance below 5.0 ohms? Yes → Go To 8 No → Repair the Sensor Return circuit for an open. With the DRBIII®, reset the ATC after repair is complete. Perform BODY VERIFICATION TEST - VER 1.	All
8	If there are no possible causes remaining, view repair. Repair Replace the ATC. With the DRBIII®, reset the ATC after repair is complete. Perform BODY VERIFICATION TEST - VER 1.	All
9	Turn the ignition off. Disconnect the ATC Remote Sensor harness connector. Disconnect the ATC C3 harness connector. Turn the ignition on. Measure the voltage of the KDB 2 Clock circuit. Is the voltage above 1.0 volt? Yes → Repair the KDB 2 Clock circuit for a short to voltage. With the DRBIII®, reset the ATC after repair is complete. Perform BODY VERIFICATION TEST - VER 1. No → Go To 10	All
10	Turn the ignition off. Disconnect the ATC Remote Sensor harness connector. Disconnect the ATC C3 harness connector. Measure the resistance between ground and the KDB 2 Clock circuit. Is the resistance above 100k ohms? Yes → Go To 11 No → Repair the KDB 2 Clock circuit for a short to ground. With the DRBIII®, reset the ATC after repair is complete. Perform BODY VERIFICATION TEST - VER 1.	All

FRONT IR SENSOR NOT CALIBRATED (ACTIVE) — Continued

TEST	ACTION	APPLICABILITY
11	Turn the ignition off. Disconnect the ATC Remote Sensor harness connector. Disconnect the ATC C3 harness connector. Measure the resistance of the KDB 2 Clock circuit. Is the resistance below 5.0 ohms? Yes → Go To 12 No → Repair the KDB 2 Clock circuit for an open. With the DRBIII®, reset the ATC after repair is complete. Perform BODY VERIFICATION TEST - VER 1.	All
12	If there are no possible causes remaining, view repair. Repair Replace the ATC. With the DRBIII®, reset the ATC after repair is complete. Perform BODY VERIFICATION TEST - VER 1.	All
13	Turn the ignition off. Disconnect the ATC Remote Sensor harness connector. Disconnect the ATC C3 harness connector. Measure the resistance between ground and the KDB 2 Data circuit. Is the resistance above 100k ohms? Yes → Go To 14 No → Repair the KDB 2 Data circuit for a short to ground. With the DRBIII®, reset the ATC after repair is complete. Perform BODY VERIFICATION TEST - VER 1.	All
14	Turn the ignition off. Disconnect the ATC Remote Sensor harness connector. Disconnect the ATC C3 harness connector. Measure the resistance of the KDB 2 Data circuit. Is the resistance below 5.0 ohms? Yes → Go To 15 No → Repair the KDB 2 Data circuit for an open. With the DRBIII®, reset the ATC after repair is complete. Perform BODY VERIFICATION TEST - VER 1.	All
15	If there are no possible causes remaining, view repair. Repair Replace the ATC. With the DRBIII®, reset the ATC after repair is complete. Perform BODY VERIFICATION TEST - VER 1.	All

FRONT IR SENSOR NOT CALIBRATED (ACTIVE) — Continued

TEST	ACTION	APPLICABILITY
16	Turn the ignition off. Disconnect the ATC Remote Sensor harness connector. Disconnect the ATC C3 harness connector. Measure the resistance of the Protected Ignition circuit. Is the resistance below 5.0 ohms? Yes → Replace the ATC. With the DRBIII®, reset the ATC after repair is complete. Perform BODY VERIFICATION TEST - VER 1. No → Repair the Protected Ignition circuit for an open. With the DRBIII®, reset the ATC after repair is complete. Perform BODY VERIFICATION TEST - VER 1.	All

Symptom:
FRONT KEYBOARD COMMUNICATION FAULT (ACTIVE)

When Monitored and Set Condition:

FRONT KEYBOARD COMMUNICATION FAULT (ACTIVE)

When Monitored: With the ignition on and the IOD fuse installed.

Set Condition: This DTC will set if there is an internal fault in the ATC head.

POSSIBLE CAUSES
ATC

TEST	ACTION	APPLICABILITY
1	This DTC indicates a fault in the ATC. View repair. Repair Replace the ATC. With the DRBIII®, reset the ATC after repair is complete. Perform BODY VERIFICATION TEST - VER 1.	All

Symptom:
FRONT MODE DOOR NOT RESPONDING (ACTIVE)

When Monitored and Set Condition:

FRONT MODE DOOR NOT RESPONDING (ACTIVE)

When Monitored: With the ignition on and the IOD fuse installed.

Set Condition: This DTC is set if the ATC does not receive feedback pulses within 5 seconds of the drive voltage being applied.

POSSIBLE CAUSES
MODE DOOR DRIVER CIRCUIT (A) SHORTED TO GROUND
MODE DOOR DRIVER CIRCUIT (B) SHORTED TO GROUND
MODE DOOR DRIVER CIRCUITS (A) AND (B) SHORTED TOGETHER
MODE DOOR DRIVER CIRCUIT (A) OPEN
MODE DOOR DRIVER CIRCUIT (B) OPEN
ATC
MODE DOOR ACTUATOR

TEST	ACTION	APPLICABILITY
1	Turn the ignition off. Disconnect the Mode Door Actuator harness connector. Disconnect the ATC C1 harness connector. Measure the resistance between ground and the Mode Door Driver (A) circuit. Is the resistance above 100k ohms? Yes → Go To 2 No → Repair the Mode Door Driver (A) circuit for a short to ground. With the DRBIII®, reset the ATC after repair is complete. Perform BODY VERIFICATION TEST - VER 1.	All
2	Turn the ignition off. Disconnect the Mode Door Actuator harness connector. Disconnect the ATC C1 harness connector. Measure the resistance between ground and the Mode Door Driver (B) circuit. Is the resistance above 100k ohms? Yes → Go To 3 No → Repair the Mode Door Driver (B) circuit for a short to ground. With the DRBIII®, reset the ATC after repair is complete. Perform BODY VERIFICATION TEST - VER 1.	All

FRONT MODE DOOR NOT RESPONDING (ACTIVE) — Continued

TEST	ACTION	APPLICABILITY
3	Turn the ignition off. Disconnect the Mode Door Actuator harness connector. Disconnect the ATC C1 harness connector. Measure the resistance between the Mode Door Driver (B) circuit and the Mode Door Driver (A) circuit. Is the resistance above 100k ohms? Yes → Go To 4 No → Repair the Mode Door Driver (A) and (B) circuits for a short together. With the DRBIII®, reset the ATC after repair is complete. Perform BODY VERIFICATION TEST - VER 1.	All
4	Turn the ignition off. Disconnect the Mode Door Actuator harness connector. Disconnect the ATC C1 harness connector. Measure the resistance of the Mode Door Driver (A) circuit. Is the resistance below 5.0 ohms? Yes → Go To 5 No → Repair the Mode Door Driver (A) circuit for an open. With the DRBIII®, reset the ATC after repair is complete. Perform BODY VERIFICATION TEST - VER 1.	All
5	Turn the ignition off. Disconnect the Mode Door Actuator harness connector. Disconnect the ATC C1 harness connector. Measure the resistance of the Mode Door Driver (B) circuit. Is the resistance below 5.0 ohms? Yes → Go To 6 No → Repair the Mode Door Driver (B) circuit for an open. With the DRBIII®, reset the ATC after repair is complete. Perform BODY VERIFICATION TEST - VER 1.	All
6	Turn the ignition off. Disconnect the ATC C1 harness connector. Measure the resistance between the Mode Door Driver (A) circuit and the Mode Door Driver (B) circuit. Is the resistance between 26.0 and 46.0 ohms? Yes → Replace the ATC. With the DRBIII®, reset the ATC after repair is complete. Perform BODY VERIFICATION TEST - VER 1. No → Go To 7	All
7	If there are no possible causes remaining, view repair. Repair Replace the Mode Door Actuator. With the DRBIII®, reset the ATC after repair is complete. Perform BODY VERIFICATION TEST - VER 1.	All

Symptom:
FRONT MODE DOOR TRAVEL TOO LARGE (ACTIVE)

When Monitored and Set Condition:

FRONT MODE DOOR TRAVEL TOO LARGE (ACTIVE)

When Monitored: With the ignition on and the IOD fuse installed.

Set Condition: This DTC is set when the ATC monitors the travel range during system initialization and the measured range is greater than expected.

POSSIBLE CAUSES
CHECK THE ATC FOR DTCS
MODE DOOR ACTUATOR
MODE DOOR LINKAGE
ATC

TEST	ACTION	APPLICABILITY
1	Turn the ignition on. With the DRB, read the active ATC DTCs. Is the FRONT MODE DOOR NOT RESPONDING DTC set? Yes → Return to the symptom list and choose the symptom. With the DRBIII®, reset the ATC after repair is complete. Perform BODY VERIFICATION TEST - VER 1. No → Go To 2	All
2	Turn the ignition off. Remove the Mode Door Actuator. By hand, attempt to rotate the Mode Door Actuator in both directions. Did the Mode Door Actuator turn in either direction? Yes → Replace the Mode Door Actuator. With the DRBIII®, reset the ATC after repair is complete. Perform BODY VERIFICATION TEST - VER 1. No → Go To 3	All
3	Remove the Mode Door Actuator. Rotate the mode doors (doors only). Note: These should rotate approximately 45 degrees from stop to stop. Inspect the mode door linkage for excessive wear or missing linkage. Were any mechanical problems found? Yes → Repair or replace the mode door/linkage as necessary. With the DRBIII®, reset the ATC after repair is complete. Perform BODY VERIFICATION TEST - VER 1. No → Replace the ATC. With the DRBIII®, reset the ATC after repair is complete. Perform BODY VERIFICATION TEST - VER 1.	All

Symptom:
FRONT MODE DOOR TRAVEL TOO SMALL (ACTIVE)

When Monitored and Set Condition:

FRONT MODE DOOR TRAVEL TOO SMALL (ACTIVE)

When Monitored: With the ignition on and the IOD fuse installed.

Set Condition: This DTC is set when the ATC monitors the travel range during system initialization and the measured range is less than expected.

POSSIBLE CAUSES
CHECK THE ATC FOR DTCS
ATC
OBSTRUCTED MODE DOOR
MODE DOOR ACTUATOR

TEST	ACTION	APPLICABILITY
1	Turn the ignition on. With the DRB, read the active ATC DTCs. Is the FRONT MODE DOOR NOT RESPONDING DTC set? Yes → Return to the symptom list and choose the symptom. With the DRBIII®, reset the ATC after repair is complete. Perform BODY VERIFICATION TEST - VER 1. No → Go To 2	All
2	Turn the ignition off. Disconnect the Mode Door Actuator harness connector. Connect a 12-volt Test Light between the Mode Door Actuator harness connector cavities. Turn the ignition on. While monitoring the test light, turn the mode control knob to each position. **Note: Observe test light for approximately 30 seconds.** Does the test light start to flash and stay flashing? Yes → Go To 3 No → Replace the ATC. With the DRBIII®, reset the ATC after repair is complete. Perform BODY VERIFICATION TEST - VER 1.	All
3	Remove the Mode Door Actuator. Rotate the mode doors (doors only). Note: These should rotate approximately 45 degrees from stop to stop. Do the mode doors move smoothly in both directions? Yes → Replace the Mode Door Actuator. With the DRBIII®, reset the ATC after repair is complete. Perform BODY VERIFICATION TEST - VER 1. No → Repair or replace the mode door as necessary. With the DRBIII®, reset the ATC after repair is complete. Perform BODY VERIFICATION TEST - VER 1.	All

Symptom:

INVALID CONDITIONS FOR COOLDOWN TEST, EVAP TEMPERATURE TOO LOW

When Monitored and Set Condition:

INVALID CONDITIONS FOR COOLDOWN TEST, EVAP TEMPERATURE TOO LOW

When Monitored: When executing the Cooldown Test.

Set Condition: This message will be displayed if the A/C - Heater Control Module sees evaporator temperature below 12.7°C (55°F) when executing the Cooldown Test.

POSSIBLE CAUSES
EVAPORATOR TEMPERATURE TOO LOW
ATC DTC(S) PRESENT
CHECK THE PCM/ECM FOR DTCS
EVAPORATOR TEMPERATURE SENSOR
SENSOR GROUND CIRCUIT HIGH RESISTANCE
EVAPORATOR TEMPERATURE SENSOR SIGNAL CIRCUIT HIGH RESISTANCE
AUTOMATIC TEMPERATURE CONTROL

TEST	ACTION	APPLICABILITY
1	**CAUTION: The work area ambient temperature must be above 15.6°C (60°F) to test A/C system operation.** Start the engine. Turn the A/C off. Turn the Blower on high. Allow the blower to run for 5 minutes to ensure that the Evaporator Temperature Sensor temperature is above 12.7°C (55°F). With the DRBIII®, actuate the Cooldown Test. Does the DRBIII® display: Cooldown Test Too Cold To Start? Yes → Go To 2 No → Perform additional testing as necessary. Perform BODY VERIFICATION TEST - VER 1.	All
2	**CAUTION: The work area ambient temperature must be above 15.6°C (60°F) to test A/C system operation.** Turn the ignition on. With the DRBIII®, read ATC DTCs. Does the DRBIII® display any ATC DTCs? Yes → Return to the symptom list and choose the symptom(s). After the repair is complete, with the DRBIII®, erase the DTC(s). Cycle the ignition switch. With the DRBIII®, reset the ATC. With the DRBIII®, actuate the Cooldown Test. Perform BODY VERIFICATION TEST - VER 1. No → Go To 3	All

INVALID CONDITIONS FOR COOLDOWN TEST, EVAP TEMPERATURE TOO LOW — Continued

TEST	ACTION	APPLICABILITY
3	**CAUTION: The work area ambient temperature must be above 15.6°C (60°F) to test A/C system operation.** Turn the ignition on. With the DRBIII®, check the PCM/ECM for DTCs. Are any DTCs present? Yes → Refer to the Powertrain Diagnostic information for the related symptom(s). After the repair is complete, with the DRBIII®, erase the DTC(s). Cycle the ignition switch. With the DRBIII®, reset the ATC. With the DRBIII®, accuate the Cooldown Test. Perform BODY VERIFICATION TEST - VER 1. No → Go To 4	All
4	Turn the ignition off. Disconnect the Evaporator Temperature Sensor harness connector. Turn the ignition on. With the DRBIII® in Sensor Display, read the Evaporator Temperature Sensor voltage. Is the voltage above 4.9 volts? Yes → Go To 5 No → Go To 6	All
5	Turn the ignition off. Disconnect the Evaporator Temperature Sensor harness connector. Connect a jumper wire between the Evaporator Temperature Sensor Signal circuit and the Sensor Ground circuit at the Evaporator Temperature Sensor harness connector. Turn the ignition on. With the DRBIII® in Sensor Display, read the Evaporator Temperature Sensor voltage. Is the voltage 0.0 volts? Yes → Replace the Evaporator Temperature Sensor in accordance with the Service Information. After the repair is complete, with the DRBIII®, reset the ATC. With the DRBIII®, accuate the Cooldown Test. Perform BODY VERIFICATION TEST - VER 1. No → Go To 6	All
6	**NOTE: Ensure that the Evaporator Temperature Sensor harness connector is connected to the Evaporator Temperature Sensor.** **NOTE: Ensure that the voltmeter leads meet the terminals in the connector and that there is good terminal to wire connection.** **NOTE: Ensure the voltmeter leads are connected for positive polarity.** Back probe the Sensor Ground circuit between the Evaporator Temperature Sensor harness connector and the ATC harness connector. Turn the ignition on. Is the voltage below 0.10 volt? Yes → Go To 7 No → Repair the high resistance in the Sensor Ground circuit. After the repair is complete, with the DRBIII®, reset the ATC. With the DRBIII®, accuate the Cooldown Test. Perform BODY VERIFICATION TEST - VER 1.	All

INVALID CONDITIONS FOR COOLDOWN TEST, EVAP TEMPERATURE TOO LOW — Continued

TEST	ACTION	APPLICABILITY
7	**NOTE: Ensure that the Evaporator Temperature Sensor harness connector is connected to the Evaporator Temperature Sensor.** **NOTE: Ensure the voltmeter leads meet the terminals in the connector and that there is good terminal to wire connection.** **NOTE: Ensure the voltmeter leads are connected for positive polarity** Back probe the Evaporator Temperature Sensor Signal circuit between the Evaporator Temperature Sensor harness connector and the ATC harness connector. Turn the ignition on. Is the voltage below 0.10 volt? Yes → Replace the Automatic Temperature Control. After the repair is complete, with the DRBIII®, reset the ATC. With the DRBIII®, accuate the Cooldown Test. Perform BODY VERIFICATION TEST - VER 1. No → Repair the high resistance in the Evaporator Temperature Sensor Signal circuit. After the repair is complete, with the DRBIII®, reset the ATC. With the DRBIII®, accuate the Cooldown Test. Perform BODY VERIFICATION TEST - VER 1.	All

Symptom:

PASS BLEND DOOR NOT RESPONDING (ACTIVE)

When Monitored and Set Condition:

PASS BLEND DOOR NOT RESPONDING (ACTIVE)

When Monitored: With the ignition on and the IOD fuse installed.

Set Condition: This DTC is set if the ATC does not receive feedback pulses within 5 seconds of the drive voltage being applied.

POSSIBLE CAUSES
PASSENGER BLEND DOOR DRIVER CIRCUIT (A) SHORTED TO GROUND
PASSENGER BLEND DOOR DRIVER CIRCUIT (B) SHORTED TO GROUND
PASSENGER BLEND DOOR DRIVER CIRCUITS (A) AND (B) SHORTED TOGETHER
PASSENGER BLEND DOOR DRIVER CIRCUIT (A) OPEN
PASSENGER BLEND DOOR DRIVER CIRCUIT (B) OPEN
ATC
PASSENGER BLEND DOOR ACTUATOR

TEST	ACTION	APPLICABILITY
1	Turn the ignition off. Disconnect the ATC C1 harness connector. Measure the resistance between ground and the Passenger Blend Door Driver (A) circuit. Is the resistance above 100k ohms? Yes → Go To 2 No → Repair the Passenger Blend Door Driver (A) circuit for a short to ground. With the DRBIII®, reset the ATC after repair is complete. Perform BODY VERIFICATION TEST - VER 1.	All
2	Turn the ignition off. Disconnect the ATC C1 harness connector. Measure the resistance between ground and the Passenger Blend Door Driver (B) circuit. Is the resistance above 100k ohms? Yes → Go To 3 No → Repair the Passenger Blend Door Driver (B) circuit for a short to ground. With the DRBIII®, reset the ATC after repair is complete. Perform BODY VERIFICATION TEST - VER 1.	All

PASS BLEND DOOR NOT RESPONDING (ACTIVE) — Continued

TEST	ACTION	APPLICABILITY
3	Turn the ignition off. Disconnect the Passenger Blend Door Actuator harness connector. Disconnect the ATC C1 harness connector. Measure the resistance between the Passenger Blend Door Driver (A) and (B) circuits. Is the resistance above 100k ohms? Yes → Go To 4 No → Repair the Passenger Blend Door Driver (A) and (B) circuits for a short together. With the DRBIII®, reset the ATC after repair is complete. Perform BODY VERIFICATION TEST - VER 1.	All
4	Turn the ignition off. Disconnect the Passenger Blend Door Actuator harness connector. Disconnect the ATC C1 harness connector. Measure the resistance of the Passenger Blend Door Driver (A) circuit. Is the resistance below 5.0 ohms? Yes → Go To 5 No → Repair the Passenger Blend Door Driver (A) circuit for an open. With the DRBIII®, reset the ATC after repair is complete. Perform BODY VERIFICATION TEST - VER 1.	All
5	Turn the ignition off. Disconnect the Passenger Blend Door Actuator harness connector. Disconnect the ATC C1 harness connector. Measure the resistance of the Passenger Blend Door Driver (B) circuit. Is the resistance below 5.0 ohms? Yes → Go To 6 No → Repair the Passenger Blend Door Driver (B) circuit for an open. With the DRBIII®, reset the ATC after repair is complete. Perform BODY VERIFICATION TEST - VER 1.	All
6	Turn the ignition off. Disconnect the ATC C1 harness connector. Measure the resistance between the Passenger Blend Door Driver (A) and (B) circuits. Is the resistance between 26.0 and 46.0 ohms? Yes → Replace the ATC. With the DRBIII®, reset the ATC after repair is complete. Perform BODY VERIFICATION TEST - VER 1. No → Go To 7	All
7	If there are no possible causes remaining, view repair. Repair Replace the Passenger Blend Door Actuator. With the DRBIII®, reset the ATC after repair is complete. Perform BODY VERIFICATION TEST - VER 1.	All

Symptom:
PASS BLEND DOOR TRAVEL TOO LARGE (ACTIVE)

When Monitored and Set Condition:

PASS BLEND DOOR TRAVEL TOO LARGE (ACTIVE)

When Monitored: With the ignition on and the IOD fuse installed.

Set Condition: This DTC is set when the ATC monitors the travel range during system initialization and the measured range is greater than expected.

POSSIBLE CAUSES
CHECK THE ATC FOR DTCS
PASSENGER BLEND DOOR ACTUATOR
PASSENGER BLEND DOOR LINKAGE
ATC

TEST	ACTION	APPLICABILITY
1	Turn the ignition on. With the DRB, read the active ATC DTCs. Is the PASSENGER BLEND DOOR NOT RESPONDING DTC set? Yes → Return to the symptom list and choose the symptom. With the DRBIII®, reset the ATC after repair is complete. Perform BODY VERIFICATION TEST - VER 1. No → Go To 2	All
2	Turn the ignition off. Remove the Passenger Blend Door Actuator. By hand, attempt to rotate the Passenger Blend Door Actuator in both directions. Did the blend door actuator turn in either direction? Yes → Replace the Passenger Blend Door Actuator. With the DRBIII®, reset the ATC after repair is complete. Perform BODY VERIFICATION TEST - VER 1. No → Go To 3	All
3	Remove the Passenger Blend Door Actuator. Rotate the blend door (door only). Note: This should rotate approximately 45 degrees from stop to stop. Inspect the blend door linkage for excessive wear or missing linkage. Were any mechanical problems found? Yes → Repair or replace the blend door/linkage as necessary. With the DRBIII®, reset the ATC after repair is complete. Perform BODY VERIFICATION TEST - VER 1. No → Replace the ATC. With the DRBIII®, reset the ATC after repair is complete. Perform BODY VERIFICATION TEST - VER 1.	All

Symptom:
PASS BLEND DOOR TRAVEL TOO SMALL (ACTIVE)

When Monitored and Set Condition:

PASS BLEND DOOR TRAVEL TOO SMALL (ACTIVE)

When Monitored: With the ignition on and the IOD fuse installed.

Set Condition: This DTC is set when the ATC monitors the travel range during system initialization and the measured range is less than expected.

POSSIBLE CAUSES
CHECK THE ATC FOR DTCS
ATC
OBSTRUCTED BLEND DOOR
PASSENGER BLEND DOOR ACTUATOR

TEST	ACTION	APPLICABILITY
1	Turn the ignition on. With the DRB, read the active ATC DTCs. Is the PASSENGER BLEND DOOR NOT RESPONDING DTC set? Yes → Return to the symptom list and choose the symptom. With the DRBIII®, reset the ATC after repair is complete. Perform BODY VERIFICATION TEST - VER 1. No → Go To 2	All
2	Turn the ignition off. Disconnect the Passenger Blend Door Actuator harness connector. Connect a 12-volt Test Light between the Passenger Blend Door Driver (A) and (B) circuits in the Passenger Blend Door Actuator harness connector. Turn the ignition on. While monitoring the test light, press the passenger blend control to change the setting from lo to hi. **Note: Observe test light for approximately 30 seconds.** Does the test light start to flash and stay flashing? Yes → Go To 3 No → Replace the ATC. With the DRBIII®, reset the ATC after repair is complete. Perform BODY VERIFICATION TEST - VER 1.	All

PASS BLEND DOOR TRAVEL TOO SMALL (ACTIVE) — Continued

TEST	ACTION	APPLICABILITY
3	Remove the Passenger Blend Door Actuator. Rotate the blend door (door only). Note: This should rotate approximately 45 degrees from stop to stop. Does the blend door move smoothly in both directions? Yes → Replace the Passenger Blend Door Actuator. With the DRBIII®, reset the ATC after repair is complete. Perform BODY VERIFICATION TEST - VER 1. No → Repair or replace the Passenger Blend Door as necessary. With the DRBIII®, reset the ATC after repair is complete. Perform BODY VERIFICATION TEST - VER 1.	All

Symptom List:

PCI BUS SHORTED HIGH (ACTIVE)
PCI BUS SHORTED LOW (ACTIVE)

Test Note: All symptoms listed above are diagnosed using the same tests. The title for the tests will be PCI BUS SHORTED HIGH (ACTIVE).

When Monitored and Set Condition:

PCI BUS SHORTED HIGH (ACTIVE)

When Monitored: With the ignition on.

Set Condition: This DTC is set if the ATC detects a short to voltage on the PCI Bus circuit.

PCI BUS SHORTED LOW (ACTIVE)

When Monitored: With the ignition on.

Set Condition: This DTC is set if the ATC detects a short to ground on the PCI Bus circuit.

POSSIBLE CAUSES
DTC CONDITION

TEST	ACTION	APPLICABILITY
1	**NOTE: For this code to be active, the DRB will not be able to communicate with any modules on the vehicle (except the PCM/ECM).** **NOTE: If this code is set and active it will be necessary to replace the Automatic Temperature Control Module for displaying a false DTC.** **NOTE: If this code is NOT active do not perform this test.** If there are no possible causes remaining, view repair. Repair Replace the ATC. With the DRBIII®, reset the ATC after repair is complete. Perform BODY VERIFICATION TEST - VER 1.	All

Symptom:
REAR BLEND DOOR NOT RESPONDING (ACTIVE)

When Monitored and Set Condition:

REAR BLEND DOOR NOT RESPONDING (ACTIVE)

When Monitored: With the ignition on and the IOD fuse installed.

Set Condition: This DTC is set if the ATC does not receive feedback pulses within 5 seconds of the drive voltage being applied.

POSSIBLE CAUSES
REAR BLEND DOOR DRIVER CIRCUIT (A) SHORTED TO GROUND
REAR BLEND DOOR DRIVER CIRCUIT (B) SHORTED TO GROUND
REAR BLEND DOOR DRIVER CIRCUITS (A) AND (B) SHORTED TOGETHER
REAR BLEND DOOR DRIVER CIRCUIT (A) OPEN
REAR BLEND DOOR DRIVER CIRCUIT (B) OPEN
ATC
REAR BLEND DOOR ACTUATOR

TEST	ACTION	APPLICABILITY
1	Turn the ignition off. Disconnect the Rear Blend Door Actuator harness connector. Disconnect the ATC C1 harness connector. Measure the resistance between ground and the Rear Blend Door Driver (A) circuit. Is the resistance above 100k ohms? Yes → Go To 2 No → Repair the Rear Blend Door Driver (A) circuit for a short to ground. With the DRBIII®, reset the ATC after repair is complete. Perform BODY VERIFICATION TEST - VER 1.	All
2	Turn the ignition off. Disconnect the Rear Blend Door Actuator harness connector. Disconnect the ATC C1 harness connector. Measure the resistance between ground and the Rear Blend Door Driver (B) circuit. Is the resistance above 100k ohms? Yes → Go To 3 No → Repair the Rear Blend Door Driver (B) circuit for a short to ground. With the DRBIII®, reset the ATC after repair is complete. Perform BODY VERIFICATION TEST - VER 1.	All

REAR BLEND DOOR NOT RESPONDING (ACTIVE) — Continued

TEST	ACTION	APPLICABILITY
3	Turn the ignition off. Disconnect the Rear Blend Door Actuator harness connector. Disconnect the ATC C1 harness connectors. Measure the resistance between the Rear Blend Door Driver (A) and (B) circuits. Is the resistance above 100k ohms? Yes → Go To 4 No → Repair the Rear Blend Door Driver (A) and (B) circuits for a short together. With the DRBIII®, reset the ATC after repair is complete. Perform BODY VERIFICATION TEST - VER 1.	All
4	Turn the ignition off. Disconnect the Rear Blend Door Actuator harness connector. Disconnect the ATC C1 harness connector. Measure the resistance of the Rear Blend Door Driver (A) circuit. Is the resistance below 5.0 ohms? Yes → Go To 5 No → Repair the Rear Blend Door Driver (A) circuit for an open. With the DRBIII®, reset the ATC after repair is complete. Perform BODY VERIFICATION TEST - VER 1.	All
5	Turn the ignition off. Disconnect the Rear Blend Door Actuator harness connector. Disconnect the ATC C1 harness connector. Measure the resistance of the Rear Blend Door Driver (B) circuit. Is the resistance below 5.0 ohms? Yes → Go To 6 No → Repair the Rear Blend Door Driver (B) circuit for an open. With the DRBIII®, reset the ATC after repair is complete. Perform BODY VERIFICATION TEST - VER 1.	All
6	Turn the ignition off. Disconnect the ATC C1 harness connector. Measure the resistance between the Rear Blend Door Driver (A) and (B) circuits. Is the resistance between 26.0 and 46.0 ohms? Yes → Replace the ATC. With the DRBIII®, reset the ATC after repair is complete. Perform BODY VERIFICATION TEST - VER 1. No → Go To 7	All
7	If there are no possible causes remaining, view repair. Repair Replace the Rear Blend Door Actuator. With the DRBIII®, reset the ATC after repair is complete. Perform BODY VERIFICATION TEST - VER 1.	All

Symptom:
REAR BLEND DOOR TRAVEL TOO LARGE (ACTIVE)

When Monitored and Set Condition:

REAR BLEND DOOR TRAVEL TOO LARGE (ACTIVE)

When Monitored: With the ignition on and the IOD fuse installed.

Set Condition: This DTC is set when the ATC monitors the travel range during system initialization and the measured range is greater than expected.

POSSIBLE CAUSES
CHECK THE ATC FOR DTCS
REAR BLEND DOOR ACTUATOR
REAR BLEND DOOR LINKAGE
ATC

TEST	ACTION	APPLICABILITY
1	Turn the ignition on. With the DRB, read the active ATC DTC's. Is the REAR BLEND DOOR NOT RESPONDING DTC set? Yes → Return to the symptom list and choose the symptom. With the DRBIII®, reset the ATC after repair is complete. Perform BODY VERIFICATION TEST - VER 1. No → Go To 2	All
2	Turn the ignition off. Remove the Rear Blend Door Actuator. By hand, attempt to rotate the Rear Blend Door Actuator in both directions. Did the blend door actuator turn in either direction? Yes → Replace the Rear Blend Door Actuator. With the DRBIII®, reset the ATC after repair is complete. Perform BODY VERIFICATION TEST - VER 1. No → Go To 3	All
3	Remove the Rear Blend Door Actuator. Rotate the blend door (door only). Note: This should rotate approximately 45 degrees from stop to stop. Inspect the blend door linkage for excessive wear or missing linkage. Were any mechanical problems found? Yes → Repair or replace the rear blend door/linkage as necessary. With the DRBIII®, reset the ATC after repair is complete. Perform BODY VERIFICATION TEST - VER 1. No → Replace the ATC. With the DRBIII®, reset the ATC after repair is complete. Perform BODY VERIFICATION TEST - VER 1.	All

Symptom:
REAR BLEND DOOR TRAVEL TOO SMALL (ACTIVE)

When Monitored and Set Condition:

REAR BLEND DOOR TRAVEL TOO SMALL (ACTIVE)

When Monitored: With the ignition on and the IOD fuse installed.

Set Condition: This DTC is set when the ATC monitors the travel range during system initialization and the measured range is less than expected.

POSSIBLE CAUSES
CHECK THE ATC FOR DTCS
ATC
OBSTRUCTED BLEND DOOR
REAR BLEND DOOR ACTUATOR

TEST	ACTION	APPLICABILITY
1	Turn the ignition on. With the DRB, read the active ATC DTCs. Is the REAR BLEND DOOR NOT RESPONDING DTC set? Yes → Return to the symptom list and choose the symptom. With the DRBIII®, reset the ATC after repair is complete. Perform BODY VERIFICATION TEST - VER 1. No → Go To 2	All
2	Turn the ignition off. Disconnect the Rear Blend Door Actuator harness connector. Connect a 12-volt Test Light across the Rear Blend Door Actuator harness connector. Turn the ignition on. While monitoring the test light, press the rear blend control to change the setting from lo to hi. **Note: Observe test light for approximately 30 seconds.** Does the test light start to flash and stay flashing? Yes → Go To 3 No → Replace the ATC. With the DRBIII®, reset the ATC after repair is complete. Perform BODY VERIFICATION TEST - VER 1.	All
3	Remove the Rear Blend Door Actuator. Rotate the blend door (door only). Note: This should rotate approximately 45 degrees from stop to stop. Does the rear blend door move smoothly in both directions? Yes → Replace the Rear Blend Door Actuator. With the DRBIII®, reset the ATC after repair is complete. Perform BODY VERIFICATION TEST - VER 1. No → Repair or replace the blend door as necessary. With the DRBIII®, reset the ATC after repair is complete. Perform BODY VERIFICATION TEST - VER 1.	All

Symptom List:

REAR FAN POT OPEN (ACTIVE)
REAR FAN POT SHORTED (ACTIVE)
REAR MODE POT OPEN (ACTIVE)
REAR MODE POT SHORTED (ACTIVE)

Test Note: All symptoms listed above are diagnosed using the same tests. The title for the tests will be REAR FAN POT OPEN (ACTIVE).

When Monitored and Set Condition:

REAR FAN POT OPEN (ACTIVE)

When Monitored: With the ignition on and the IOD fuse installed.

Set Condition: This DTC is set if the ATC reads the rear blower switch value and it is above 250 A/D counts.

REAR FAN POT SHORTED (ACTIVE)

When Monitored: With the ignition on and the IOD fuse installed.

Set Condition: This DTC is set if the ATC reads the rear fan switch value and it is below 5 A/D counts.

REAR MODE POT OPEN (ACTIVE)

When Monitored: With the ignition on and the IOD fuse installed.

Set Condition: This DTC is set if the ATC reads the rear mode select switch value and it is above 250 A/D counts.

REAR MODE POT SHORTED (ACTIVE)

When Monitored: With the ignition on and the IOD fuse installed.

Set Condition: This DTC is set if the ATC reads the rear mode select switch value and it is below 5 A/D counts.

POSSIBLE CAUSES
REAR ATC SWITCH

TEST	ACTION	APPLICABILITY
1	This DTC indicates a fault in the Rear ATC Switch. View repair. Repair Replace the Rear ATC Switch. With the DRBIII®, reset the ATC after repair is complete. Perform BODY VERIFICATION TEST - VER 1.	All

Symptom:
REAR KEYBOARD FAULT (ACTIVE)

When Monitored and Set Condition:

REAR KEYBOARD FAULT (ACTIVE)

When Monitored: With the ignition on and the IOD fuse installed.

Set Condition: This DTC will set if there is an internal fault in the ATC head.

POSSIBLE CAUSES
BCM
IGNITION SWITCH (RUN) CIRCUIT OPEN
KDB CLOCK CIRCUIT SHORTED TO VOLTAGE
KDB DATA CIRCUIT SHORTED TO GROUND
KDB DATA CIRCUIT SHORTED TO VOLTAGE
KDB CLOCK CIRCUIT SHORTED TO GROUND
KDB DATA CIRCUIT OPEN
ATC - KDB DATA CIRCUIT FAULT
KDB CLOCK CIRCUIT OPEN
ATC - KDB CLOCK CIRCUIT FAULT
REAR ATC SWITCH GROUND CIRCUIT OPEN
REAR AUTOMATIC TEMPERATURE CONTROL SWITCH

TEST	ACTION	APPLICABILITY
1	Turn the ignition off. Disconnect the Rear Automatic Temperature Control Switch harness connector. Measure the resistance of the Rear ATC Switch Ground circuit. Is the resistance below 5.0 ohms? Yes → Go To 2 No → Repair the Rear ATC Switch Ground circuit for an open. With the DRBIII®, reset the ATC after repair is complete. Perform BODY VERIFICATION TEST - VER 1.	All
2	Turn the ignition off. Disconnect the Rear Automatic Temperature Control Switch harness connector. Turn the ignition on. Measure the voltage of the Ignition Switch (Run) circuit. Is the voltage above 10.0 volts? Yes → Go To 3 No → Go To 14	All

REAR KEYBOARD FAULT (ACTIVE) — Continued

TEST	ACTION	APPLICABILITY
3	Turn the ignition off. Disconnect the Rear Automatic Temperature Control Switch harness connector. Turn the ignition on. Measure the voltage of the KDB Data circuit. Is the voltage above 10.0 volts? Yes → Go To 4 No → Go To 11	All
4	Turn the ignition off. Disconnect the Rear Automatic Temperature Control Switch harness connector. Disconnect the ATC C2 harness connector. Turn the ignition on. Measure the voltage of the KDB Data circuit. Is the voltage above 1.0 volt? Yes → Repair the KDB Data circuit for a short to voltage. With the DRBIII®, reset the ATC after repair is complete. Perform BODY VERIFICATION TEST - VER 1. No → Go To 5	All
5	Turn the ignition off. Disconnect the Rear Automatic Temperature Control Switch harness connector. Use Scope input cable CH7058, Cable to Probe adapter CH7062, and the red and black test probes. Connect the scope input cable to the channel one connector on the DRB. Attach the red and black leads and the cable to probe adapter to the scope input cable. Select Lab Scope. Select Live. Select 12 volt square wave. Press F2 for Scope. Press F2 and use the arrows to set the voltage range to 20 volts, the Offset to 4.0, and the Probe to x10. Press F2 again and set the divisions to 40ms/Div, then press F2 again when complete. Connect the Black lead to the chassis ground. Connect the Red lead to the KDB Clock circuit in the Rear Automatic Temperature Control Switch harness connector. Turn the ignition on. Observe the voltage display on the DRB Lab Scope. **NOTE: The lab scope pattern should look similar to the example given in the support material and cycle from approximately 0 volts to 8.0 volts.** Did the lab scope pattern and voltage react as noted above? Yes → Go To 6 No → Go To 7	All
6	If there are no possible causes remaining, view repair. Repair Replace the Rear Automatic Temperature Control Switch. With the DRBIII®, reset the ATC after repair is complete. Perform BODY VERIFICATION TEST - VER 1.	All

REAR KEYBOARD FAULT (ACTIVE) — Continued

TEST	ACTION	APPLICABILITY
7	Turn the ignition off. Disconnect the Rear Automatic Temperature Control Switch harness connector. Disconnect the ATC C2 harness connector. Turn the ignition on. Measure the voltage of the KDB Clock circuit. Is the voltage above 1.0 volt? Yes → Repair the KDB Clock circuit for a short to voltage. With the DRBIII®, reset the ATC after repair is complete. Perform BODY VERIFICATION TEST - VER 1. No → Go To 8	All
8	Turn the ignition off. Disconnect the Rear Automatic Temperature Control Switch harness connector. Disconnect the ATC C2 harness connector. Measure the resistance between ground and the KDB Clock circuit. Is the resistance above 100k ohms? Yes → Go To 9 No → Repair the KDB Clock circuit for a short to ground. With the DRBIII®, reset the ATC after repair is complete. Perform BODY VERIFICATION TEST - VER 1.	All
9	Turn the ignition off. Disconnect the Rear Automatic Temperature Control Switch harness connector. Disconnect the ATC C2 harness connector. Measure the resistance of the KDB Clock circuit. Is the resistance below 5.0 ohms? Yes → Go To 10 No → Repair the KDB Clock circuit for an open. With the DRBIII®, reset the ATC after repair is complete. Perform BODY VERIFICATION TEST - VER 1.	All
10	If there are no possible causes remaining, view repair. Repair Replace the ATC. With the DRBIII®, reset the ATC after repair is complete. Perform BODY VERIFICATION TEST - VER 1.	All
11	Turn the ignition off. Disconnect the Rear Automatic Temperature Control Switch harness connector. Disconnect the ATC C2 harness connector. Measure the resistance between ground and the KDB Data circuit. Is the resistance above 100k ohms? Yes → Go To 12 No → Repair the KDB Data circuit for a short to ground. With the DRBIII®, reset the ATC after repair is complete. Perform BODY VERIFICATION TEST - VER 1.	All

REAR KEYBOARD FAULT (ACTIVE) — Continued

TEST	ACTION	APPLICABILITY
12	Turn the ignition off. Disconnect the Rear Automatic Temperature Control Switch harness connector. Disconnect the ATC C2 harness connector. Measure the resistance of the KDB Data circuit. Is the resistance below 5.0 ohms? Yes → Go To 13 No → Repair the KDB Data circuit for an open. With the DRBIII®, reset the ATC after repair is complete. Perform BODY VERIFICATION TEST - VER 1.	All
13	If there are no possible causes remaining, view repair. Repair Replace the ATC. With the DRBIII®, reset the ATC after repair is complete. Perform BODY VERIFICATION TEST - VER 1.	All
14	Turn the ignition off. Disconnect the Rear Automatic Temperature Control Switch harness connector. Disconnect the BCM C4 harness connector. Measure the resistance of the Ignition Switch (Run) circuit. Is the resistance below 5.0 ohms? Yes → Replace the BCM. With the DRBIII®, reset the ATC after repair is complete. Perform BODY VERIFICATION TEST - VER 1. No → Repair the Ignition Switch (Run) circuit for an open. With the DRBIII®, reset the ATC after repair is complete. Perform BODY VERIFICATION TEST - VER 1.	All

Symptom:
REAR MODE DOOR NOT RESPONDING (ACTIVE)

When Monitored and Set Condition:

REAR MODE DOOR NOT RESPONDING (ACTIVE)

When Monitored: With the ignition on and the IOD fuse installed.

Set Condition: This DTC is set if the ATC does not receive feedback pulses within 5 seconds of the drive voltage being applied.

POSSIBLE CAUSES
REAR MODE DOOR DRIVER CIRCUIT (A) SHORTED TO GROUND
REAR MODE DOOR DRIVER CIRCUIT (B) SHORTED TO GROUND
REAR MODE DOOR DRIVER CIRCUITS (A) AND (B) SHORTED TOGETHER
REAR MODE DOOR DRIVER CIRCUIT (A) OPEN
REAR MODE DOOR DRIVER CIRCUIT (B) OPEN
ATC
REAR MODE DOOR ACTUATOR

TEST	ACTION	APPLICABILITY
1	Turn the ignition off. Disconnect the ATC C1 harness connector. Measure the resistance between ground and the Rear Mode Door Driver (A) circuit. Is the resistance above 100k ohms? Yes → Go To 2 No → Repair the Rear Mode Door Driver (A) circuit for a short to ground. With the DRBIII®, reset the ATC after repair is complete. Perform BODY VERIFICATION TEST - VER 1.	All
2	Turn the ignition off. Disconnect the ATC C1 harness connector. Measure the resistance between ground and the Rear Mode Door Driver (B) circuit. Is the resistance above 100k ohms? Yes → Go To 3 No → Repair the Rear Mode Door Driver (B) circuit for a short to ground. With the DRBIII®, reset the ATC after repair is complete. Perform BODY VERIFICATION TEST - VER 1.	All

REAR MODE DOOR NOT RESPONDING (ACTIVE) — Continued

TEST	ACTION	APPLICABILITY
3	Turn the ignition off. Disconnect the ATC C1 harness connector. Measure the resistance between the Rear Mode Door Driver (A) and (B) circuits. Is the resistance above 100k ohms? Yes → Go To 4 No → Repair the Rear Mode Door Driver (A) and (B) circuits for a short together. With the DRBIII®, reset the ATC after repair is complete. Perform BODY VERIFICATION TEST - VER 1.	All
4	Turn the ignition off. Disconnect the ATC C1 harness connector. Disconnect the Rear Mode Door Actuator harness connector. Measure the resistance of the Rear Mode Door Driver (A) circuit. Is the resistance below 5.0 ohms? Yes → Go To 5 No → Repair the Rear Mode Door Driver (A) circuit for an open. With the DRBIII®, reset the ATC after repair is complete. Perform BODY VERIFICATION TEST - VER 1.	All
5	Turn the ignition off. Disconnect the ATC C1 harness connector. Disconnect the Rear Mode Door Actuator harness connector. Measure the resistance of the Rear Mode Door Driver (B) circuit. Is the resistance below 5.0 ohms? Yes → Go To 6 No → Repair the Rear Mode Door Driver (B) circuit for an open. With the DRBIII®, reset the ATC after repair is complete. Perform BODY VERIFICATION TEST - VER 1.	All
6	Turn the ignition off. Disconnect the ATC C1 harness connector. Measure the resistance between the Rear Mode Door Driver (A) and (B) circuits. Is the resistance between 26.0 and 46.0 ohms? Yes → Replace the ATC. With the DRBIII®, reset the ATC after repair is complete. Perform BODY VERIFICATION TEST - VER 1. No → Go To 7	All
7	If there are no possible causes remaining, view repair. Repair Replace the Rear Mode Door Actuator. With the DRBIII®, reset the ATC after repair is complete. Perform BODY VERIFICATION TEST - VER 1.	All

Symptom:
REAR MODE DOOR TRAVEL TOO LARGE (ACTIVE)

When Monitored and Set Condition:

REAR MODE DOOR TRAVEL TOO LARGE (ACTIVE)

When Monitored: With the ignition on and the IOD fuse installed.

Set Condition: This DTC is set when the ATC monitors the travel range during system initialization and the measured range is greater than expected.

POSSIBLE CAUSES
CHECK THE ATC FOR DTCS
REAR MODE DOOR ACTUATOR
REAR MODE DOOR LINKAGE
ATC

TEST	ACTION	APPLICABILITY
1	Turn the ignition on. With the DRB, read the active ATC DTCs. Is the REAR MODE DOOR NOT RESPONDING DTC set? Yes → Return to the symptom list and choose the symptom. With the DRBIII®, reset the ATC after repair is complete. Perform BODY VERIFICATION TEST - VER 1. No → Go To 2	All
2	Turn the ignition off. Remove the Rear Mode Door Actuator. By hand, attempt to rotate the Rear Mode Door Actuator in both directions. Did the mode door actuator turn in either direction? Yes → Replace the Rear Mode Door Actuator. With the DRBIII®, reset the ATC after repair is complete. Perform BODY VERIFICATION TEST - VER 1. No → Go To 3	All
3	Remove the Rear Mode Door Actuator. Rotate the mode door (door only). Note: This should rotate approximately 45 degrees from stop to stop. Inspect the rear mode door linkage for excessive wear or missing linkage. Were any mechanical problems found? Yes → Repair or replace the rear mode door/linkage as necessary. With the DRBIII®, reset the ATC after repair is complete. Perform BODY VERIFICATION TEST - VER 1. No → Replace the ATC. With the DRBIII®, reset the ATC after repair is complete. Perform BODY VERIFICATION TEST - VER 1.	All

Symptom:
REAR MODE DOOR TRAVEL TOO SMALL (ACTIVE)

When Monitored and Set Condition:

REAR MODE DOOR TRAVEL TOO SMALL (ACTIVE)

When Monitored: With the ignition on and the IOD fuse installed.

Set Condition: This DTC is set when the ATC monitors the travel range during system initialization and the measured range is less than expected.

POSSIBLE CAUSES
CHECK THE ATC FOR DTCS
ATC
OBSTRUCTED MODE DOOR
REAR MODE DOOR ACTUATOR

TEST	ACTION	APPLICABILITY
1	Turn the ignition on. With the DRB, read the active ATC DTCs. Is the REAR MODE DOOR NOT RESPONDING DTC set? Yes → Return to the symptom list and choose the symptom. With the DRBIII®, reset the ATC after repair is complete. Perform BODY VERIFICATION TEST - VER 1. No → Go To 2	All
2	Turn the ignition off. Disconnect the Rear Mode Door Actuator harness connector. Connect a 12-volt Test Light between the rear mode door driver (A) and (B) circuits in the Rear A/C Heater Unit harness connector. Turn the ignition on. While monitoring the test light, turn the rear mode control to each position. **Note: Observe test light for approximately 30 seconds.** Does the test light start to flash and stay flashing? Yes → Go To 3 No → Replace the ATC. With the DRBIII®, reset the ATC after repair is complete. Perform BODY VERIFICATION TEST - VER 1.	All
3	Remove the Rear Mode Door Actuator. Rotate the blend door (door only). Note: This should rotate approximately 45 degrees from stop to stop. Does the rear mode door move smoothly in both directions? Yes → Replace the Rear Mode Door Actuator. With the DRBIII®, reset the ATC after repair is complete. Perform BODY VERIFICATION TEST - VER 1. No → Repair or replace the Rear Mode Door as necessary. With the DRBIII®, reset the ATC after repair is complete. Perform BODY VERIFICATION TEST - VER 1.	All

Symptom:
RECIRC DOOR NOT RESPONDING (ACTIVE)

When Monitored and Set Condition:

RECIRC DOOR NOT RESPONDING (ACTIVE)

When Monitored: Ignition in RUN and IOD fuse installed.

Set Condition: This DTC is set when the ATC does not receive feedback pulses within 5 seconds of the drive voltage being applied.

POSSIBLE CAUSES
RECIRC DOOR DRIVER CIRCUIT (A) SHORTED TO GROUND
RECIRC DOOR DRIVER CIRCUIT (B) SHORTED TO GROUND
RECIRC DOOR DRIVER CIRCUITS (A) AND (B) SHORTED TOGETHER
RECIRC DOOR DRIVER CIRCUIT (A) OPEN
RECIRC DOOR DRIVER CIRCUIT (B) OPEN
ATC
RECIRCULATION DOOR ACTUATOR

TEST	ACTION	APPLICABILITY
1	Turn the ignition off. Disconnect the Recirculation Door Actuator harness connector. Disconnect the ATC C1 harness connector. Measure the resistance between ground and the Recirculation Door Driver (A) circuit. Is the resistance above 100k ohms? Yes → Go To 2 No → Repair the Recirculation Door Driver (A) circuit for a short to ground. With the DRBIII®, reset the ATC after repair is complete. Perform BODY VERIFICATION TEST - VER 1.	All
2	Turn the ignition off. Disconnect the Recirculation Door Actuator harness connector. Disconnect the ATC C1 harness connector. Measure the resistance between ground and the Recirculation Door Driver (B) circuit. Is the resistance above 100k ohms? Yes → Go To 3 No → Repair the Recirculation Door Driver (B) circuit for a short to ground. With the DRBIII®, reset the ATC after repair is complete. Perform BODY VERIFICATION TEST - VER 1.	All

RECIRC DOOR NOT RESPONDING (ACTIVE) — Continued

TEST	ACTION	APPLICABILITY
3	Turn the ignition off. Disconnect the Recirculation Door Actuator harness connector. Disconnect the ATC C1 harness connector. Measure the resistance between the Recirculation Door Driver (A) and (B) circuits. Is the resistance above 100k ohms? Yes → Go To 4 No → Repair the Recirculation Door Driver (A) and (B) circuits for a short together. With the DRBIII®, reset the ATC after repair is complete. Perform BODY VERIFICATION TEST - VER 1.	All
4	Turn the ignition off. Disconnect the Recirculation Door Actuator harness connector. Disconnect the ATC C1 harness connector. Measure the resistance of the Recirculation Door Driver (A) circuit. Is the resistance below 5.0 ohms? Yes → Go To 5 No → Repair the Recirculation Door Driver (A) circuit for an open. With the DRBIII®, reset the ATC after repair is complete. Perform BODY VERIFICATION TEST - VER 1.	All
5	Turn the ignition off. Disconnect the Recirculation Door Actuator harness connector. Disconnect the ATC C1 harness connector. Measure the resistance of the Recirculation Door Driver (B) circuit. Is the resistance below 5.0 ohms? Yes → Go To 6 No → Repair the Recirculation Door Driver (B) circuit for an open. With the DRBIII®, reset the ATC after repair is complete. Perform BODY VERIFICATION TEST - VER 1.	All
6	Turn the ignition off. Disconnect the ATC C1 harness connector. Measure the resistance between the Recirculation Door Driver (A) and (B) circuits. Is the resistance between 26.0 and 46.0 ohms? Yes → Replace the ATC. With the DRBIII®, reset the ATC after repair is complete. Perform BODY VERIFICATION TEST - VER 1. No → Go To 7	All
7	If there are no possible causes remaining, view repair. Repair Replace the Recirculation Door Actuator. With the DRBIII®, reset the ATC after repair is complete. Perform BODY VERIFICATION TEST - VER 1.	All

Symptom:
RECIRC DOOR TRAVEL TOO LARGE (ACTIVE)

When Monitored and Set Condition:

RECIRC DOOR TRAVEL TOO LARGE (ACTIVE)

When Monitored: Ignition in RUN and IOD fuse installed.

Set Condition: This DTC is set when the ATC monitors the travel range during system initialization and the measured range is greater than expected.

POSSIBLE CAUSES
CHECK THE ATC FOR DTCS
RECIRCULATION DOOR ACTUATOR
RECIRCULATION DOOR LINKAGE
ATC

TEST	ACTION	APPLICABILITY
1	Turn the ignition on. With the DRB, read the active ATC DTCs. Is the RECIRC DOOR NOT RESPONDING DTC set? Yes → Return to the symptom list and choose the symptom. With the DRBIII®, reset the ATC after repair is complete. Perform BODY VERIFICATION TEST - VER 1. No → Go To 2	All
2	Turn the ignition off. Remove the Recirculation Door Actuator. By hand, attempt to rotate the Recirculation Door Actuator in both directions. Did the Recirculation Door Actuator turn in either direction? Yes → Replace the Recirculation Door Actuator. With the DRBIII®, reset the ATC after repair is complete. Perform BODY VERIFICATION TEST - VER 1. No → Go To 3	All
3	Remove the Recirculation Door Actuator. Rotate the recirculation door (door only). Note: This should rotate approximately 45 degrees from stop to stop. Inspect the recirculation door linkage for excessive wear or missing linkage. Were any mechanical problems found? Yes → Repair or replace the recirculation door/linkage as necessary. With the DRBIII®, reset the ATC after repair is complete. Perform BODY VERIFICATION TEST - VER 1. No → Replace the ATC. With the DRBIII®, reset the ATC after repair is complete. Perform BODY VERIFICATION TEST - VER 1.	All

Symptom:
RECIRC DOOR TRAVEL TOO SMALL (ACTIVE)

When Monitored and Set Condition:

RECIRC DOOR TRAVEL TOO SMALL (ACTIVE)

When Monitored: Ignition in RUN and IOD fuse installed.

Set Condition: This DTC is set when the ATC monitors the travel range during system initialization and the measured range is less than expected.

POSSIBLE CAUSES
CHECK THE ATC FOR DTCS
ATC
OBSTRUCTED RECIRC DOOR
RECIRCULATION DOOR ACTUATOR

TEST	ACTION	APPLICABILITY
1	Turn the ignition on. With the DRB, read the active ATC DTCs. Is the RECIRC DOOR NOT RESPONDING DTC set? Yes → Return to the symptom list and choose the symptom. With the DRBIII®, reset the ATC after repair is complete. Perform BODY VERIFICATION TEST - VER 1. No → Go To 2	All
2	Turn the ignition off. Disconnect the Recirculation Door Actuator harness connector. Connect a 12-volt Test Light between the Recirculation Door Driver (A) and (B) circuits. Turn the ignition on. While monitoring the test light, press the recirculation control button from off to on. **Note: Observe test light for approximately 30 seconds.** Does the test light start to flash and stay flashing? Yes → Go To 3 No → Replace the ATC. With the DRBIII®, reset the ATC after repair is complete. Perform BODY VERIFICATION TEST - VER 1.	All
3	Remove the Recirculation Door Actuator. Rotate the recirculation door (door only). Note: This should rotate approximately 45 degrees from stop to stop. Does the recirculation door move smoothly in both directions? Yes → Replace the Recirculation Door Actuator. With the DRBIII®, reset the ATC after repair is complete. Perform BODY VERIFICATION TEST - VER 1. No → Repair or replace the recirculation door as necessary. With the DRBIII®, reset the ATC after repair is complete. Perform BODY VERIFICATION TEST - VER 1.	All

Symptom:
*ATC HEAD LED(S)/BACK LIGHTING INOPERATIVE

POSSIBLE CAUSES
CHECK FOR ATC DTCS
CHECK FOR BCM DTCS
ATC - LED(S) INOPERATIVE
ATC - BACK LIGHTING INOPERATIVE
PANEL LAMPS DRIVER CIRCUIT OPEN
BODY CONTROL MODULE - PANEL LAMPS DRIVER OPEN

TEST	ACTION	APPLICABILITY
1	Turn the ignition on. With the DRBIII®, read ATC DTCs. Does the DRBIII® display any ATC DTCs? Yes → Return to the symptom list and choose the symptom(s). With the DRBIII®, reset the ATC after repair is complete. Perform BODY VERIFICATION TEST - VER 1. No → Go To 2	All
2	Turn the ignition on. With the DRBIII®, read the BCM DTCs. Does DRBIII® display Headlamp Switch: Mismatch; STG; Open; or Panel Dim Output Short? Yes → Refer to symptoms Headlamp Switch Mismatch, Headlamp Switch Shorted To Ground, and Headlamp Switch Open in the Exterior Lighting catagory. Refer to symptom Panel Dimming Output Short in the Instrument Cluster catagory. With the DRBIII®, reset the ATC after repair is complete. Perform BODY VERIFICATION TEST - VER 1. No → Go To 3	All
3	Turn the ignition on. Turn the ATC Power switch on. **NOTE: Compare with a known good ATC Head.** Operate all ATC switches (Front Fan, Rear System, Temp, Mode, A/C, Recirc, Rear Defog) while looking at the display and lights on the ATC Head. Are all of the LEDs operating properly? Yes → Go To 4 No → Replace the ATC in accordance with the Service Information. With the DRBIII®, reset the ATC after repair is complete. Perform BODY VERIFICATION TEST - VER 1.	All

*ATC HEAD LED(S)/BACK LIGHTING INOPERATIVE — Continued

TEST	ACTION	APPLICABILITY
4	Turn the ignition off. Rotate the Panel Lamps Dimmer switch to the off position. Disconnect the ATC C2 harness connector. Turn the park lamps on. Measure the voltage of the Panel Lamps Driver circuit while rotating the Panel Lamps Dimmer switch from the off position to the full brightness position. Does the voltage change from approximately 2.5 volts to 11.5 volts? Yes → Replace the ATC in accordance with the Service Information. With the DRBIII®, reset the ATC after repair is complete. Perform BODY VERIFICATION TEST - VER 1. No → Go To 5	All
5	Turn the ignition off. Disconnect the ATC C2 harness connector. Disconnect the Body Control Module C4 harness connector. Measure the resistance of the Panel Lamps Driver circuit between the ATC C2 harness connector and the Body Control Module C4 harness connector. Is the resistance below 5 ohms? Yes → Replace the Body Control Module in accordance with the Service Information. With the DRBIII®, reset the ATC after repair is complete. Perform BODY VERIFICATION TEST - VER 1. No → Repair the Panel Lamps Driver circuit for an open. With the DRBIII®, reset the ATC after repair is complete. Perform BODY VERIFICATION TEST - VER 1.	All

Symptom:

***FRONT BLOWER MOTOR INOPERATIVE**

POSSIBLE CAUSES
FRONT CONTROL MODULE (FCM) DTC(S) PRESENT
IPM FUSE #10
FUSED FRONT BLOWER MOTOR RELAY OUTPUT CIRCUIT SHORTED TO GROUND
BLOWER MOTOR SHORTED TO GROUND
FRONT BLOWER POWER MODULE SHORTRD TO GROUND
GROUND CIRCUIT OPEN
BLOWER MOTOR CONTROL CIRCUIT SHORTED TO VOLTAGE
BLOWER MOTOR CONTROL CIRCUIT OPEN
FRONT BLOWER POWER MODULE OPEN
AUTOMATIC TEMPERATURE CONTROL MODULE OPEN
CHECK BLOWER MOTOR OPERATION
FRONT BLOWER POWER MODULE OPEN
IPM - OPEN CIRCUIT
IPM - OPEN CIRCUIT
FRONT BLOWER MOTOR RELAY
IPM - OPEN CIRCUIT
FUSED FRONT BLOWER MOTOR RELAY OUTPUT CIRCUIT OPEN

TEST	ACTION	APPLICABILITY
1	With the DRBIII® in FCM, read the active DTCs. Are any active FCM DTCs present? Yes → For FCM DTCs related to the blower relay circuits, refer to the Heating & A/C catagory. For all other FCM DTCs, refer to the symptom list in the related catagory. With the DRBIII®, reset the ATC after repair is complete. Perform BODY VERIFICATION TEST - VER 1. No → Go To 2	All
2	Turn the ignition off. Remove and inspect Intelligent Power Module (IPM) Fuse #10. Is the fuse open? Yes → Go To 3 No → Go To 6	All

*FRONT BLOWER MOTOR INOPERATIVE — Continued

TEST	ACTION	APPLICABILITY
3	Replace IPM Fuse #10. Turn the ignition on. Operate the blower motor in all speeds. Start the engine and operate the ATC system in all modes and speeds. Does the blower motor operate properly without blowing the fuse? Yes → Refer to the wiring diagrams located in the service information to help isolate a possible intermittent short to ground condition. With the DRBIII®, reset the ATC after repair is complete. Perform BODY VERIFICATION TEST - VER 1. No → Go To 4	All
4	Turn the ignition off. Disconnect the Front Blower Power Module C1 harness connector. Measure the resistance between ground and the Fused Front Blower Motor Relay Output circuit. Is the resistance below 10K ohms? Yes → Repair the Fused Front Blower Motor Relay Output circuit for a short to ground. Replace IPM Fuse #10. With the DRBIII®, reset the ATC after repair is complete. Perform BODY VERIFICATION TEST - VER 1. No → Go To 5	All
5	Turn the ignition off. Replace IPM Fuse #10. Disconnect the Front Blower Power Module C1 harness connector. Disconnect the Front Blower Power Module C2 harness connector. Connect a jumper wire between the Fused Front Blower Motor Relay Output circuit in the Front Blower Power Module C1 harness connector and the DB wire in the Front Blower Power Module C2 harness connector. Connect a jumper wire between the Ground circuit in the Front Blower Power Module C1 harness connector and the DB/YL wire in the Front Blower Power Module C2 harness connector. Turn the ignition on. Does the Blower Motor operate at full speed without blowing the fuse? Yes → Replace the Front Blower Power Module in accordance with the Service Information. Replace IPM Fuse #10. With the DRBIII®, reset the ATC after repair is complete. Perform BODY VERIFICATION TEST - VER 1. No → Replace the Blower Motor in accordance with the Service Information. Replace IPM Fuse #10. With the DRBIII®, reset the ATC after repair is complete. Perform BODY VERIFICATION TEST - VER 1.	All
6	Ensure IPM Fuse #10 is installed. Disconnect the Front Blower Power Module C1 harness connector. Turn the ignition on. **NOTE: The test light must illuminate brightly. Compare the brightness to that of a direct connection to the battery.** Using a 12-volt test light connected to ground, back probe the Fused Front Blower Motor Relay Output circuit in the Front Blower Power Module C1 harness connector. Does the test light illuminate brightly? Yes → Go To 7 No → Go To 13	All

*FRONT BLOWER MOTOR INOPERATIVE — Continued

TEST	ACTION	APPLICABILITY
7	Turn the ignition off. Disconnect the Front Blower Power Module C1 harness connector. Measure the resistance between ground and the Ground circuit. Is the resistance below 5.0 ohms? Yes → Go To 8 No → Repair the Ground circuit for an open. With the DRBIII®, reset the ATC after repair is complete. Perform BODY VERIFICATION TEST - VER 1.	All
8	Turn the ignition off. Disconnect the Front Blower Power Module C1 harness connector. Disconnect the Automatic Temperature Control Module C2 harness connector. Turn the ignition on. Measure the voltage of the Blower Motor Control circuit. Is there any voltage present? Yes → Repair the Blower Motor Control circuit for a short to voltage. With the DRBIII®, reset the ATC after repair is complete. Perform BODY VERIFICATION TEST - VER 1. No → Go To 9	All
9	Turn the ignition off. Disconnect the Front Blower Power Module C1 harness connector. Disconnect the Automatic Temperature Control Module C2 harness connector. Measure the resistance of the Blower Motor Control circuit between the Front Blower Power Module C1 harness connector and the Automatic Temperature Control Module C2 harness connector. Is the resistance below 5.0 ohms? Yes → Go To 10 No → Repair the Blower Motor Control circuit for an open. With the DRBIII®, reset the ATC after repair is complete. Perform BODY VERIFICATION TEST - VER 1.	All
10	Turn the ignition off. Make sure that the Front Blower Power Module C1 harness connector is connected to the Front Blower Power Module. Make sure that the Automatic Temperature Control Module C2 harness connector is connected to the Automatic Temperature Control Module. Start the engine. Press the ATC Power Switch on. Set the blower switch to the LO speed position. While back probing, measure the voltage of the Blower Motor Control circuit in the Automatic Temperature Control Module C2 harness connector. Is the voltage above 10.0 volts? Yes → Go To 11 No → Replace the Front Blower Power Module in accordance with the Service Information. With the DRBIII®, reset the ATC after repair is complete. Perform BODY VERIFICATION TEST - VER 1.	All

*FRONT BLOWER MOTOR INOPERATIVE — Continued

TEST	ACTION	APPLICABILITY
11	Turn the ignition off. Reconnect all previously disconnected components. Connect the DRBIII® X10 Scope Probe CH7061 to Channel 1 on the DRBIII®. Select the following from the DRBIII® menu: PEP Module Tools; Lab Scope; Live Data; and Lab Scope. Press F2 and then press Enter. Using the left/right arrow keys, set the time to 10ms/Div. Press F2. Using the up/down arrow keys, set the voltage range to +20.0v. Press Enter to move the cursor to Probe. Using the up/down arrow keys, set the Probe to X10. Press F2. Start the engine. Press the ATC Power switch on. Using the X10 Scope Probe, back probe the Blower Motor Control circuit in the Front Blower Power Module C1 harness connector. **NOTE: The Blower Power Module provides a 10.0 volt signal to the ATC Module over the Blower Motor Control circuit. The ATC Module provides a variable duty cycle ground to the 10.0 volt signal based on input from the blower control switch.** **NOTE: When the blower control switch is set to LO speed, the ATC Module provides a short duty cycle (less time grounding the signal voltage).** **NOTE: As higher blower speeds are requested, the ATC Module increases the duty cycle (more time grounding the signal voltage).** **NOTE: When the blower control switch reaches HI speed, the duty cycle increases to where the signal pattern is almost a flat line (with brief voltage spikes).** Set the blower switch to LO speed then slowly move it to HI speed while observing the DRBIII® display. The voltage on the scope patten should cycle from approximately 2.0 volts (duty cycle on) to 10.0 volts (duty cycle off) for all blower speeds. The duty cycle pattern should change smoothly as the blower switch is turned from LO to HI. The duty cycle on time should change from approximately 8 ms at LO speed, to 15 ms at medium speed, and to 25 ms at HI speed. Does the DRBIII® display the voltage range and duty cycle as described above? Yes → Go To 12 No → Replace the Automatic Temperature Control Module in accordance with the Service Information. With the DRBIII®, reset the ATC after repair is complete. Perform BODY VERIFICATION TEST - VER 1.	All

*FRONT BLOWER MOTOR INOPERATIVE — Continued

TEST	ACTION	APPLICABILITY
12	Turn the ignition off. Disconnect the Front Blower Power Module C1 harness connector. Disconnect the Front Blower Power Module C2 harness connector. Connect a jumper wire between the Fused Front Blower Motor Relay Output circuit in the Front Blower Power Module C1 harness connector and the DB wire in the Front Blower Power Module C2 harness connector. Connect a jumper wire between the Ground circuit in the Front Blower Power Module C1 harness connector and the DB/YL wire in the Front Blower Power Module C2 harness connector. Turn the ignition on. Does the Blower Motor operate at full speed? Yes → Replace the Front Blower Power Module in accordance with the Service Information. With the DRBIII®, reset the ATC after repair is complete. Perform BODY VERIFICATION TEST - VER 1. No → Replace the Blower Motor in accordance with the Service Information. With the DRBIII®, reset the ATC after repair is complete. Perform BODY VERIFICATION TEST - VER 1.	All
13	Turn the ignition off. Remove the Front Blower Motor Relay from the IPM. **NOTE: The test light must illuminate brightly. Compare the brightness to that of a direct connection to the battery.** Using a 12-volt test light connected to ground, probe cavity 30 of the Front Blower Motor Relay connector. Does the test light illuminate brightly? Yes → Go To 14 No → Replace the IPM in accordance with the Service Information. With the DRBIII®, reset the ATC after repair is complete. Perform BODY VERIFICATION TEST - VER 1.	All
14	Turn the ignition off. Remove the Front Blower Motor Relay from the IPM. Remove IPM Fuse #10. Measure the resistance between cavity 87 of the Front Blower Motor Relay connector and IPM Fuse #10 (power input cavity). Is the resistance below 5 ohms? Yes → Go To 15 No → Replace the IPM in accordance with the Service Information. With the DRBIII®, reset the ATC after repair is complete. Perform BODY VERIFICATION TEST - VER 1.	All

*FRONT BLOWER MOTOR INOPERATIVE — Continued

TEST	ACTION	APPLICABILITY
15	Turn the ignition off. Make sure that the Front Blower Motor Relay is installed. Remove IPM Fuse #10. Turn the ignition on. **NOTE: The test light must illuminate brightly. Compare the brightness to that of a direct connection to the battery.** Using a 12-volt test light connected to ground, probe IPM Fuse #10 (power input cavity). Does the test light illuminate brightly? Yes → Go To 16 No → Replace the Front Blower Motor Relay in accordance with the Service Information. With the DRBIII®, reset the ATC after repair is complete. Perform BODY VERIFICATION TEST - VER 1.	All
16	Turn the ignition off. Remove IPM Fuse #10. Disconnect the IPM C6 harness connector. Measure the resistance between IPM Fuse #10 (power output cavity) and cavity 7 of the IPM C6 connector (IPM side). Is the resistance below 5 ohms? Yes → Repair the Fused Front Blower Motor Relay Output circuit for an open. With the DRBIII®, reset the ATC after repair is complete. Perform BODY VERIFICATION TEST - VER 1. No → Replace the IPM in accordance with the Service Information. With the DRBIII®, reset the ATC after repair is complete. Perform BODY VERIFICATION TEST - VER 1.	All

Symptom:

***FRONT BLOWER RUNS AT ONLY ONE SPEED**

POSSIBLE CAUSES
BLOWER MOTOR CONTROL CIRCUIT SHORTED TO GROUND
AUTOMATIC TEMPERATURE CONTROL MODULE
FRONT BLOWER POWER MODULE

TEST	ACTION	APPLICABILITY
1	**CAUTION: The ATC will clamp the blower speed if the PCM disables A/C compressor operation due to low or high A/C pressure, immanent overheat detection, or an overheat condition. Verify that none of these conditions exist before diagnosing blower concerns.** Turn the ignition off. Disconnect the Front Blower Power Module C1 harness connector. Disconnect the Automatic Temperature Control Module C2 harness connector. Measure the resistance between ground and the Blower Motor Control circuit. Is the resistance below 10K ohms? Yes → Repair the Blower Motor Control circuit for a short to ground. With the DRBIII®, reset the ATC after repair is complete. Perform BODY VERIFICATION TEST - VER 1. No → Go To 2	All

*FRONT BLOWER RUNS AT ONLY ONE SPEED — Continued

TEST	ACTION	APPLICABILITY
2	Turn the ignition off. Reconnect all previously disconnected components. Connect the DRBIII® X10 Scope Probe CH7061 to Channel 1 on the DRBIII®. Select the following from the DRBIII® menu: PEP Module Tools; Lab Scope; Live Data; and Lab Scope. Press F2 and then press Enter. Using the left/right arrow keys, set the time to 10ms/Div. Press F2. Using the up/down arrow keys, set the voltage range to +20.0v. Press Enter to move the cursor to Probe. Using the up/down arrow keys, set the Probe to X10. Press F2. Start the engine. Press the ATC Power switch on. Using the X10 Scope Probe, back probe the Blower Motor Control circuit in the Front Blower Power Module C1 harness connector. **NOTE: The Blower Power Module provides a 10.0 volt signal to the ATC Module over the Blower Motor Control circuit. The ATC Module provides a variable duty cycle ground to the 10.0 volt signal based on input from the blower control switch.** **NOTE: When the blower control switch is set to LO speed, the ATC Module provides a short duty cycle (less time grounding the signal voltage).** **NOTE: As higher blower speeds are requested, the ATC Module increases the duty cycle (more time grounding the signal voltage).** **NOTE: When the blower control switch reaches HI speed, the duty cycle increases to where the signal pattern is almost a flat line (with brief voltage spikes).** Set the blower switch to LO speed then slowly move it to HI speed while observing the DRBIII® display. The voltage on the scope patten should cycle from approximately 2.0 volts (duty cycle on) to 10.0 volts (duty cycle off) for all blower speeds. The duty cycle pattern should change smoothly as the blower switch is turned from LO to HI. The duty cycle on time should change from approximately 8 ms at LO speed, to 15 ms at medium speed, and to 25 ms at HI speed. Does the DRBIII® display the voltage range and duty cycle as described above? Yes → Replace the Front Blower Power Module in accordance with the Service Information. With the DRBIII®, reset the ATC after repair is complete. Perform BODY VERIFICATION TEST - VER 1. No → Replace the Automatic Temperature Control Module in accordance with the Service Information. With the DRBIII®, reset the ATC after repair is complete. Perform BODY VERIFICATION TEST - VER 1.	All

Symptom:

***HVAC SYSTEM TEST**

POSSIBLE CAUSES
ATTEMPT TO COMMUNICATE WITH THE PCM/ECM, THE BCM, AND THE FCM
CHECK FOR HVAC RELATED DTCS IN THE PCM/ECM
CHECK FOR BCM DTCS
CHECK FOR FCM DTCS
CHECK FOR ACTIVE ATC DTCS
CHECK FOR AC COOLDOWN TEST FAULT MESSAGES
CHECK FOR HVAC RELATED DTCS IN THE PCM/ECM
MANUAL A/C SYSTEM TEST

TEST	ACTION	APPLICABILITY
1	Turn the ignition on. With the DRBIII®, attempt to communicate with the Powertrain/Engine Control Module. With the DRBIII®, attempt to communicate with the Body Control Module. With the DRBIII®, attempt to communicate with the Front Control Module. Was the DRBIII® able to communicate with the PCM/ECM, the BCM, and the FCM? Yes → Go To 2 No → Refer to the communication category for the related symptom(s). Perform BODY VERIFICATION TEST - VER 1.	All
2	With the DRBIII®, read Powertrain/Engine Computer DTC's. Are any HVAC related DTCs present? Yes → Refer to the Powertrain Diagnostic Procedures Manual for the related symptom(s). Perform BODY VERIFICATION TEST - VER 1. No → Go To 3	All
3	With the DRBIII®, read Body Computer DTC's. Are any DTCs present? Yes → Refer to the appropriate catagory for the related symptom(s). Perform BODY VERIFICATION TEST - VER 1. No → Go To 4	All
4	With the DRBIII®, read Front Control Module DTC's. Are any DTCs present? Yes → For FCM DTCs related to the blower relay circuits, refer to the Heating & A/C catagory. For all other FCM DTCs, refer to the symptom list in the related catagory. Perform BODY VERIFICATION TEST - VER 1. No → Go To 5	All

*HVAC SYSTEM TEST — Continued

TEST	ACTION	APPLICABILITY
5	**NOTE: Active codes must be resolved before diagnosing stored codes.** **NOTE: Anytime a code becomes active proceed to the conclusion question.** **NOTE: If multiple codes appear, diagnose those that relate to a short circuit first.** Start the engine. Press the ATC Power switch on. Turn the front blower control to the low speed position. If equipped, turn the rear blower control to the Rear Control position. Set the Driver, Pass, and, if equipped, Rear temperature controls to 60°F (16°C). Monitor the DRBIII® for active ATC DTCs while performing the following test steps. Press the recirculation mode switch on, wait 30 seconds, and then press it off. Press the A/C mode switch on, wait 30 seconds, and then press it off. Press the rear defogger switch on, wait 30 seconds, and then press it off. Set the Driver temperature control to the max heat setting, wait 30 seconds, and then set it to the max cool setting. Repeat this step for the Pass and, if equipped, Rear temperature controls. Turn the mode control to each position for 30 seconds and then turn it back to the panel position. Press the Auto HI switch, wait 30 seconds, and then press the Auto LO switch. When function is complete, turn the front blower control to the low speed position. If equipped, on the Rear ATC Control, set the rear temperature control to the max heat setting, wait 30 seconds, and then set it to the max cool setting. If equipped, on the Rear ATC Control, turn the mode control to each position for 30 seconds. With the DRBIII® in ATC, Miscellaneous, reset the ATC. Does the DRBIII® display any active ATC DTCs? Yes → Return to the symptom list and choose the symptom(s) Perform BODY VERIFICATION TEST - VER 1. No → Go To 6	All

*HVAC SYSTEM TEST — Continued

TEST	ACTION	APPLICABILITY
6	**WARNING: DO NOT OPERATE THE DCHA IN AN ENCLOSED AREA SUCH AS A GARAGE THAT DOES NOT HAVE EXHAUST VENTILATION FACILITIES. ALWAYS VENT THE DCHA's EXHAUST WHEN OPERATING THE DCHA. FAILURE TO FOLLOW THESE INSTRUCTIONS CAN RESULT IN PERSONAL INJURY OR DEATH.** **NOTE: For RG vehicles equipped with a Diesel Cabin Heater Assist (DCHA), refer to Venting the DCHA's Exhaust under Cabin Heater in the General Information portion of this manual for proper exhaust venting instructions.** **NOTE: The AC Cooldown Test is actuated with the DRBIII®. The test checks A/C system performance based on evaporator temperature sensor input. It also forces the ATC to initiate a Cabin Heater Activation request when the vehicle is equipped with a DCHA.** **NOTE: The A/C related portion of this test will not run if ambient temp is below 12°C (53°F). However, the forced Cabin Heater activation will occur even if the A/C portion of this test fails to initiate because test criteria was not met.** **NOTE: The A/C related portion of this test will pass if evap temp drops 6.7°C (20°F) within 2 minutes of starting this test.** **NOTE: Only A/C related messages display on the DRBIII® after running this test. These messages will clear after paging back out of this test. Therefore, it is important to note all of the test messages before doing so.** **NOTE: Running this test will cause DELAY & Snowflake VF sgmnts on ATC to flash for 162 secs (RG w/DCHA only). If A/C related portion of this test fails, DELAY & Snowflake VF sgmnts will continue to flash until vehicle is driven more than 3 miles.** Start the engine. Press the ATC's Power switch on. Turn the Mode control to the panel position. Verify that the front blower motor and, if equipped, rear blower motor operate correctly in all speeds from each control. Diagnose and repair all blower related faults before proceeding with this test. Turn the Front Blower control to the high speed position. Set the Driver, Pass, and, if equipped, Rear temperature controls to 72°F (22°C). **CAUTION: Do not activate the A/C Cooldown Test with the engine off. Failure to follow these instructions can result in internal damage to the DCHA Heater Module.** **NOTE: Do not disconnect the vehicle's battery or the DCHA's main power supply while the DCHA is in operation or in run-down mode. Failure to follow these instructions can result in excess emissions from the DCHA during heater operation.** **NOTE: Before actuating the AC Cooldown Test, verify that the A/C compressor is not running, If the compressor is running, turn the A/C off and allow the evaporator to warm up before proceeding with the test.** **NOTE: The DCHA, if equipped, will operate for approximately 7 minutes. 3 minutes to run and 4 minutes to purge.** With the DRBIII® in ATC, Systems Tests, perform the AC Cooldown Test. Does the DRBIII® display any Cooldown Test fault messages? Yes → Return to the symptom list and choose the symptom(s) Perform BODY VERIFICATION TEST - VER 1. No → Go To 7	All

*HVAC SYSTEM TEST — Continued

TEST	ACTION	APPLICABILITY
7	With the DRBIII®, read PCM/ECM DTC's. Are any HVAC related DTCs present? Yes → Refer to the Powertrain Diagnostic Procedures Manual for the related symptom(s). Perform BODY VERIFICATION TEST - VER 1. No → Recheck the climate control system performance. Refer to Service Information for additional information. Perform BODY VERIFICATION TEST - VER 1.	All

Symptom:
*REAR ATC SWITCH LED(S)/BACK LIGHTING INOPERATIVE

POSSIBLE CAUSES
CHECK FOR ATC DTCS
CHECK FOR BCM DTCS
REAR ATC SWITCH - LED(S) INOPERATIVE
REAR ATC SWITCH - BACK LIGHTING INOPERATIVE
PANEL LAMPS DRIVER CIRCUIT OPEN
BODY CONTROL MODULE - PANEL LAMPS DRIVER OPEN

TEST	ACTION	APPLICABILITY
1	Turn the ignition on. With the DRBIII®, read ATC DTCs. Does the DRBIII® display any ATC DTCs? Yes → Return to the symptom list and choose the symptom(s). With the DRBIII®, reset the ATC after repair is complete. Perform BODY VERIFICATION TEST - VER 1. No → Go To 2	All
2	Turn the ignition on. With the DRBIII®, read the BCM DTCs. Does DRBIII® display Headlamp Switch: Mismatch; STG; Open; or Panel Dim Output Short? Yes → Refer to symptoms Headlamp Switch Mismatch, Headlamp Switch Shorted To Ground, and Headlamp Switch Open in the Exterior Lighting catagory. Refer to symptom Panel Dimming Output Short in the Instrument Cluster catagory. With the DRBIII®, reset the ATC after repair is complete. Perform BODY VERIFICATION TEST - VER 1. No → Go To 3	All
3	Turn the ignition on. Turn the ATC Power switch on. Turn the Rear System switch on the ATC Head to the Rear Control position. Turn the Fan switch on the Rear ATC Switch to the Auto position. Set the Rear Temp to the HI setting. **NOTE: Compare with a known good Rear ATC Switch.** While looking at the display on the Rear ATC Switch, press and hold the Temp Up/Down control in the Down position. Are all segments of the LEDs operating properly as the temperature changes from HI to LO? Yes → Go To 4 No → Replace the Rear ATC Switch in accordance with the Service Information. With the DRBIII®, reset the ATC after repair is complete. Perform BODY VERIFICATION TEST - VER 1.	All

*REAR ATC SWITCH LED(S)/BACK LIGHTING INOPERATIVE — Continued

TEST	ACTION	APPLICABILITY
4	Turn the ignition off. Rotate the Panel Lamps Dimmer switch to the off position. Disconnect the Rear ATC Switch harness connector. Turn the park lamps on. Measure the voltage of the Panel Lamps Driver circuit while rotating the Panel Lamps Dimmer switch from the off position to the full brightness position. Does the voltage change from approximately 2.5 volts to 11.5 volts? Yes → Replace the Rear ATC Switch in accordance with the Service Information. With the DRBIII®, reset the ATC after repair is complete. Perform BODY VERIFICATION TEST - VER 1. No → Go To 5	All
5	Turn the ignition off. Disconnect the Rear ATC Switch harness connector. Disconnect the Body Control Module C3 harness connector. Measure the resistance of the Panel Lamps Driver circuit between the Rear ATC Switch harness connector and the Body Control Module C3 harness connector. Is the resistance below 5 ohms? Yes → Replace the Body Control Module in accordance with the Service Information. With the DRBIII®, reset the ATC after repair is complete. Perform BODY VERIFICATION TEST - VER 1. No → Repair the Panel Lamps Driver circuit for an open. With the DRBIII®, reset the ATC after repair is complete. Perform BODY VERIFICATION TEST - VER 1.	All

Symptom:

***REAR BLOWER MOTOR INOPERATIVE**

POSSIBLE CAUSES
FRONT CONTROL MODULE (FCM) DTC(S) PRESENT
IPM FUSE #12
FUSED REAR BLOWER RELAY OUTPUT CIRCUIT SHORTED TO GROUND
BLOWER MOTOR SHORTED TO GROUND
REAR BLOWER MOTOR POWER MODULE SHORTRD TO GROUND
GROUND CIRCUIT OPEN
REAR BLOWER MOTOR CONTROL CIRCUIT SHORTED TO VOLTAGE
REAR BLOWER MOTOR CONTROL CIRCUIT OPEN
REAR BLOWER MOTOR POWER MODULE OPEN
AUTOMATIC TEMPERATURE CONTROL MODULE OPEN
CHECK BLOWER MOTOR OPERATION
REAR BLOWER MOTOR POWER MODULE OPEN
IPM - OPEN CIRCUIT
IPM - OPEN CIRCUIT
REAR BLOWER MOTOR RELAY
IPM - OPEN CIRCUIT
FUSED REAR BLOWER MOTOR RELAY OUTPUT CIRCUIT OPEN

TEST	ACTION	APPLICABILITY
1	With the DRBIII® in FCM, read the active DTCs. Are any active FCM DTCs present? Yes → For FCM DTCs related to the blower relay circuits, refer to the Heating & A/C catagory. For all other FCM DTCs, refer to the symptom list in the related catagory. With the DRBIII®, reset the ATC after repair is complete. Perform BODY VERIFICATION TEST - VER 1. No → Go To 2	All
2	Turn the ignition off. Remove and inspect Intelligent Power Module (IPM) Fuse #12. Is the fuse open? Yes → Go To 3 No → Go To 6	All

*REAR BLOWER MOTOR INOPERATIVE — Continued

TEST	ACTION	APPLICABILITY
3	Replace IPM Fuse #12. Turn the ignition on. Operate the blower motor in all speeds. Start the engine and operate the ATC system in all modes and speeds. Does the blower motor operate properly without blowing the fuse? Yes → Refer to the wiring diagrams located in the service information to help isolate a possible intermittent short to ground condition. With the DRBIII®, reset the ATC after repair is complete. Perform BODY VERIFICATION TEST - VER 1. No → Go To 4	All
4	Turn the ignition off. Disconnect the Rear Blower Motor Power Module C1 harness connector. Measure the resistance between ground and the Fused Rear Blower Relay Output circuit. Is the resistance below 10K ohms? Yes → Repair the Fused Rear Blower Relay Output circuit for a short to ground. Replace IPM Fuse #12. With the DRBIII®, reset the ATC after repair is complete. Perform BODY VERIFICATION TEST - VER 1. No → Go To 5	All
5	Turn the ignition off. Replace IPM Fuse #12. Disconnect the Rear Blower Motor Power Module C1 harness connector. Disconnect the Rear Blower Motor Power Module C2 harness connector. Connect a jumper wire between the Fused Rear Blower Relay Output circuit in the Rear Blower Motor Power Module C1 harness connector and the Power Feed circuit in the Rear Blower Motor Power Module C2 harness connector. Connect a jumper wire between the Ground circuit in the Rear Blower Motor Power Module C1 harness connector and the Ground circuit in the Rear Blower Motor Power Module C2 harness connector. Turn the ignition on. Does the Blower Motor operate at full speed without blowing the fuse? Yes → Replace the Rear Blower Motor Power Module in accordance with the Service Information. Replace IPM Fuse #12. With the DRBIII®, reset the ATC after repair is complete. Perform BODY VERIFICATION TEST - VER 1. No → Replace the Blower Motor in accordance with the Service Information. Replace IPM Fuse #12. With the DRBIII®, reset the ATC after repair is complete. Perform BODY VERIFICATION TEST - VER 1.	All
6	Ensure IPM Fuse #12 is installed. Disconnect the Rear Blower Motor Power Module C1 harness connector. Turn the ignition on. **NOTE: The test light must illuminate brightly. Compare the brightness to that of a direct connection to the battery.** Using a 12-volt test light connected to ground, back probe the Fused Rear Blower Relay Output circuit in the Rear Blower Motor Power Module C1 harness connector. Does the test light illuminate brightly? Yes → Go To 7 No → Go To 13	All

*REAR BLOWER MOTOR INOPERATIVE — Continued

TEST	ACTION	APPLICABILITY
7	Turn the ignition off. Disconnect the Rear Blower Motor Power Module C1 harness connector. Measure the resistance between ground and the Ground circuit. Is the resistance below 5.0 ohms? Yes → Go To 8 No → Repair the Ground circuit for an open. With the DRBIII®, reset the ATC after repair is complete. Perform BODY VERIFICATION TEST - VER 1.	All
8	Turn the ignition off. Disconnect the Rear Blower Motor Power Module C1 harness connector. Disconnect the Automatic Temperature Control Module C2 harness connector. Turn the ignition on. Measure the voltage of the Rear Blower Motor Control circuit. Is there any voltage present? Yes → Repair the Rear Blower Motor Control circuit for a short to voltage. With the DRBIII®, reset the ATC after repair is complete. Perform BODY VERIFICATION TEST - VER 1. No → Go To 9	All
9	Turn the ignition off. Disconnect the Rear Blower Motor Power Module C1 harness connector. Disconnect the Automatic Temperature Control Module C2 harness connector. Measure the resistance of the Rear Blower Motor Control circuit between the Rear Blower Motor Power Module C1 harness connector and the Automatic Temperature Control Module C2 harness connector. Is the resistance below 5.0 ohms? Yes → Go To 10 No → Repair the Rear Blower Motor Control circuit for an open. With the DRBIII®, reset the ATC after repair is complete. Perform BODY VERIFICATION TEST - VER 1.	All
10	Turn the ignition off. Make sure that the Rear Blower Motor Power Module C1 harness connector is connected to the Rear Blower Motor Power Module. Make sure that the Automatic Temperature Control Module C2 harness connector is connected to the Automatic Temperature Control Module. Start the engine. Press the ATC Power switch on. Set the Rear System switch on the ATC module to the Rear Control position. Set the blower switch on the Rear ATC Control panel to LO speed. While back probing, measure the voltage of the Rear Blower Motor Control circuit in the Automatic Temperature Control Module C2 harness connector. Is the voltage above 10.0 volts? Yes → Go To 11 No → Replace the Rear Blower Motor Power Module in accordance with the Service Information. With the DRBIII®, reset the ATC after repair is complete. Perform BODY VERIFICATION TEST - VER 1.	All

*REAR BLOWER MOTOR INOPERATIVE — Continued

TEST	ACTION	APPLICABILITY
11	Turn the ignition off. Reconnect all previously disconnected components. Connect the DRBIII® X10 Scope Probe CH7061 to Channel 1 on the DRBIII®. Select the following from the DRBIII® menu: PEP Module Tools; Lab Scope; Live Data; and Lab Scope. Press F2 and then press Enter. Using the left/right arrow keys, set the time to 10ms/Div. Press F2. Using the up/down arrow keys, set the voltage range to +20.0v. Press Enter to move the cursor to Probe. Using the up/down arrow keys, set the Probe to X10. Press F2. Start the engine. Press the ATC Power switch on. Set the Rear System switch on the ATC module to the Rear Control position. Using the X10 Scope Probe, back probe the Rear Blower Motor Control circuit in the Automatic Temperature Control Module C2 harness connector. **NOTE: The Rear Blower Motor Power Module provides a 10.0 volt signal to the ATC Module over the Rear Blower Motor Control circuit. The ATC Module provides a variable duty cycle ground to the 10.0 volt signal based on input from the Rear Blower switch.** **NOTE: When the Rear Blower switch is set to LO speed, the ATC Module provides a short duty cycle (less time grounding the signal voltage).** **NOTE: As higher blower speeds are requested, the ATC Module increases the duty cycle (more time grounding the signal voltage).** **NOTE: When the Rear Blower switch reaches HI speed, the duty cycle increases to where the signal pattern is almost a flat line (with brief voltage spikes).** Set the blower switch on the Rear ATC Control panel to LO speed then slowly move it to HI speed while observing the DRBIII® display. The voltage on the scope patten should cycle from approximately 2.0 volts (duty cycle on) to 10.0 volts (duty cycle off) for all blower speeds. The duty cycle pattern should change smoothly as the Rear Blower switch is turned from LO to HI. The duty cycle on time should change from approximately 8 ms at LO speed, to 15 ms at medium speed, and to 25 ms at HI speed. Does the DRBIII® display the voltage range and duty cycle as described above? Yes → Go To 12 No → Replace the Automatic Temperature Control Module in accordance with the Service Information. With the DRBIII®, reset the ATC after repair is complete. Perform BODY VERIFICATION TEST - VER 1.	All

*REAR BLOWER MOTOR INOPERATIVE — Continued

TEST	ACTION	APPLICABILITY
12	Turn the ignition off. Disconnect the Rear Blower Motor Power Module C1 harness connector. Disconnect the Rear Blower Motor Power Module C2 harness connector. Connect a jumper wire between the Fused Rear Blower Relay Output circuit in the Rear Blower Motor Power Module C1 harness connector and the Power Feed circuit in the Rear Blower Motor Power Module C2 harness connector. Connect a jumper wire between the Ground circuit in the Rear Blower Motor Power Module C1 harness connector and the Ground circuit in the Rear Blower Motor Power Module C2 harness connector. Turn the ignition on. Does the Blower Motor operate at full speed? Yes → Replace the Rear Blower Motor Power Module in accordance with the Service Information. With the DRBIII®, reset the ATC after repair is complete. Perform BODY VERIFICATION TEST - VER 1. No → Replace the Blower Motor in accordance with the Service Information. With the DRBIII®, reset the ATC after repair is complete. Perform BODY VERIFICATION TEST - VER 1.	All
13	Turn the ignition off. Remove the Rear Blower Motor Relay from the IPM. **NOTE: The test light must illuminate brightly. Compare the brightness to that of a direct connection to the battery.** Using a 12-volt test light connected to ground, probe cavity 30 of the Rear Blower Motor Relay connector. Does the test light illuminate brightly? Yes → Go To 14 No → Replace the IPM in accordance with the Service Information. With the DRBIII®, reset the ATC after repair is complete. Perform BODY VERIFICATION TEST - VER 1.	All
14	Turn the ignition off. Remove the Rear Blower Motor Relay from the IPM. Remove IPM Fuse #12. Measure the resistance between cavity 87 of the Rear Blower Motor Relay connector and IPM Fuse #12 (power input cavity). Is the resistance below 5 ohms? Yes → Go To 15 No → Replace the IPM in accordance with the Service Information. With the DRBIII®, reset the ATC after repair is complete. Perform BODY VERIFICATION TEST - VER 1.	All

*REAR BLOWER MOTOR INOPERATIVE — Continued

TEST	ACTION	APPLICABILITY
15	Turn the ignition off. Make sure that the Rear Blower Motor Relay is installed. Remove IPM Fuse #12. Turn the ignition on. **NOTE: The test light must illuminate brightly. Compare the brightness to that of a direct connection to the battery.** Using a 12-volt test light connected to ground, probe IPM Fuse #12 (power input cavity). Does the test light illuminate brightly? Yes → Go To 16 No → Replace the Rear Blower Motor Relay in accordance with the Service Information. With the DRBIII®, reset the ATC after repair is complete. Perform BODY VERIFICATION TEST - VER 1.	All
16	Turn the ignition off. Remove IPM Fuse #12. Disconnect the IPM C8 harness connector. Measure the resistance between IPM Fuse #12 (power output cavity) and cavity 7 of the IPM C8 connector (IPM side). Is the resistance below 5 ohms? Yes → Repair the Fused Rear Blower Motor Relay Output circuit for an open. With the DRBIII®, reset the ATC after repair is complete. Perform BODY VERIFICATION TEST - VER 1. No → Replace the IPM in accordance with the Service Information. With the DRBIII®, reset the ATC after repair is complete. Perform BODY VERIFICATION TEST - VER 1.	All

Symptom:

***REAR BLOWER RUNS AT ONLY ONE SPEED**

POSSIBLE CAUSES
REAR BLOWER MOTOR CONTROL CIRCUIT SHORTED TO GROUND
AUTOMATIC TEMPERATURE CONTROL MODULE
REAR BLOWER MOTOR POWER MODULE

TEST	ACTION	APPLICABILITY
1	Turn the ignition off. Disconnect the Rear Blower Motor Power Module C1 harness connector. Disconnect the Automatic Temperature Control Module C2 harness connector. Measure the resistance between ground and the Rear Blower Motor Control circuit. Is the resistance below 10K ohms? Yes → Repair the Rear Blower Motor Control circuit for a short to ground. With the DRBIII®, reset the ATC after repair is complete. Perform BODY VERIFICATION TEST - VER 1. No → Go To 2	All

*REAR BLOWER RUNS AT ONLY ONE SPEED — Continued

TEST	ACTION	APPLICABILITY
2	Turn the ignition off. Reconnect all previously disconnected components. Connect the DRBIII® X10 Scope Probe CH7061 to Channel 1 on the DRBIII®. Select the following from the DRBIII® menu: PEP Module Tools; Lab Scope; Live Data; and Lab Scope. Press F2 and then press Enter. Using the left/right arrow keys, set the time to 10ms/Div. Press F2. Using the up/down arrow keys, set the voltage range to +20.0v. Press Enter to move the cursor to Probe. Using the up/down arrow keys, set the Probe to X10. Press F2. Start the engine. Press the ATC Power switch on. Set the Rear System switch on the ATC module to the Rear Control position. Using the X10 Scope Probe, back probe the Rear Blower Motor Control circuit in the Automatic Temperature Control Module C2 harness connector. **NOTE: The Rear Blower Motor Power Module provides a 10.0 volt signal to the ATC Module over the Rear Blower Motor Control circuit. The ATC Module provides a variable duty cycle ground to the 10.0 volt signal based on input from the Rear Blower switch.** **NOTE: When the Rear Blower switch is set to LO speed, the ATC Module provides a short duty cycle (less time grounding the signal voltage).** **NOTE: As higher blower speeds are requested, the ATC Module increases the duty cycle (more time grounding the signal voltage).** **NOTE: When the Rear Blower switch reaches HI speed, the duty cycle increases to where the signal pattern is almost a flat line (with brief voltage spikes).** Set the blower switch on the Rear ATC Control panel to LO speed then slowly move it to HI speed while observing the DRBIII® display. The voltage on the scope patten should cycle from approximately 2.0 volts (duty cycle on) to 10.0 volts (duty cycle off) for all blower speeds. The duty cycle pattern should change smoothly as the Rear Blower switch is turned from LO to HI. The duty cycle on time should change from approximately 8 ms at LO speed, to 15 ms at medium speed, and to 25 ms at HI speed. Does the DRBIII® display the voltage range and duty cycle as described above? Yes → Replace the Rear Blower Motor Power Module in accordance with the Service Information. With the DRBIII®, reset the ATC after repair is complete. Perform BODY VERIFICATION TEST - VER 1. No → Replace the Automatic Temperature Control Module in accordance with the Service Information. With the DRBIII®, reset the ATC after repair is complete. Perform BODY VERIFICATION TEST - VER 1.	All

Symptom List:

A. CABIN HEATER PRE-TEST
CABIN HEATER CONTROL CIRCUIT OPEN (STORED)
CABIN HEATER CONTROL CIRCUIT SHORT TO BATTERY (STORED)

Test Note: All symptoms listed above are diagnosed using the same tests. The title for the tests will be A. CABIN HEATER PRE-TEST.

When Monitored and Set Condition:

CABIN HEATER CONTROL CIRCUIT OPEN (STORED)

When Monitored: When the DCHA system is off.

Set Condition: The DCHA Low Side Driver inside the FCM expects to see a system voltage of 13.8 volts through the DCHA relay coil when the DCHA system is off. This DTC will set if the FCM sees a voltage below 3.5 volts on the Cabin Heater Assist Control circuit during this time.

CABIN HEATER CONTROL CIRCUIT SHORT TO BATTERY (STORED)

When Monitored: During DCHA activation and operation.

Set Condition: This DTC will set if the FCM sees between 5.0 and 15.0 volts on the Cabin Heater Assist Control circuit.

POSSIBLE CAUSES
NO RESPONSE FROM CABIN HEATER MODULE
DTC(S) PRESENT
CABIN HEATER INOPERABLE FROM A/C - HEATER MODULE (MTC)
CABIN HEATER INOPERABLE FROM AUTO TEMP CONTROL (ATC)
STORED DCHA DTC(S) TEST COMPLETE

A. CABIN HEATER PRE-TEST — Continued

TEST	ACTION	APPLICABILITY
1	**WARNING: DO NOT OPERATE THE DCHA IN AN ENCLOSED AREA SUCH AS A GARAGE THAT DOES NOT HAVE EXHAUST VENTILATION FACILITIES. ALWAYS VENT THE DCHA's EXHAUST WHEN OPERATING THE DCHA. FAILURE TO FOLLOW THESE INSTRUCTIONS CAN RESULT IN PERSONAL INJURY OR DEATH.** **CAUTION: When using a powered exhaust ventilation system, do not attach the exhaust ventilation hose directly to the DCHA exhaust pipe. Too much suction can prevent DCHA operation.** When using a powered exhaust ventilation system, affix the ventilation hose to the DCHA exhaust pipe or to the vehicle in such a manor that the end of the ventilation hose remains approximately three inches away from the end of the DCHA exhaust pipe. When using a non-powered exhaust ventilation system, affix the ventilation hose directly to the DCHA exhaust pipe. Turn the ignition on. With the DRBIII®, attempt to communicate with the Cabin Heater Module. Does the DRBIII® display: No Response From Cabin Heater Module? Yes → Refer to Communication for the related symptom. Perform CABIN HEATER VERIFICATION TEST - VER 1. No → Go To 2	All
2	**WARNING: DO NOT OPERATE THE DCHA IN AN ENCLOSED AREA SUCH AS A GARAGE THAT DOES NOT HAVE EXHAUST VENTILATION FACILITIES. ALWAYS VENT THE DCHA's EXHAUST WHEN OPERATING THE DCHA. FAILURE TO FOLLOW THESE INSTRUCTIONS CAN RESULT IN PERSONAL INJURY OR DEATH.** Turn the ignition on. With the DRBIII®, read Cabin Heater DTCs. Is DTC B1813 Heater In Lockout Mode present? Yes → Go To 3 No → Go To 4	All
3	**WARNING: DO NOT OPERATE THE DCHA IN AN ENCLOSED AREA SUCH AS A GARAGE THAT DOES NOT HAVE EXHAUST VENTILATION FACILITIES. ALWAYS VENT THE DCHA's EXHAUST WHEN OPERATING THE DCHA. FAILURE TO FOLLOW THESE INSTRUCTIONS CAN RESULT IN PERSONAL INJURY OR DEATH.** Start the engine. Allow the engine to idle. Turn the ATC's or MTC's Power switch on. Turn the Blower control to the high speed position. On MTC, set the Blend control to the max heat position. On ATC, set the Driver temperature control to HI (max heat). Remove Cabin Heater Fuse #15 from the IPM for a minimum of five seconds, then reinstall the fuse. The DCHA may attempt to start. Turn the Blower control off and turn the ATC's or MTC's Power switch off. Turn the engine off. View repair Repair Go To 4	All

A. CABIN HEATER PRE-TEST — Continued

TEST	ACTION	APPLICABILITY
4	**WARNING: DO NOT OPERATE THE DCHA IN AN ENCLOSED AREA SUCH AS A GARAGE THAT DOES NOT HAVE EXHAUST VENTILATION FACILITIES. ALWAYS VENT THE DCHA's EXHAUST WHEN OPERATING THE DCHA. FAILURE TO FOLLOW THESE INSTRUCTIONS CAN RESULT IN PERSONAL INJURY OR DEATH.** **WARNING: ALLOW THE DCHA ASSEMBLY TO COOL BEFORE PERFORMING A COMPONENT INSPECTION/REPAIR/REPLACEMENT. FAILURE TO FOLLOW THESE INSTRUCTIONS CAN RESULT IN PERSONAL INJURY OR DEATH.** **NOTE: The DCHA Control will store up to three DTCs in its memory.** **NOTE: If the DCHA Control detects a new fault in the DCHA system, one that is not already stored in its memory, the DCHA Control will clear the oldest of the three stored DTCs, and it will store the new fault's DTC.** **NOTE: If the DCHA control detects a reoccurrence of a stored fault, the DCHA control will overwrite that fault's DTC with the most recent occurrence.** Turn the ignition on. On MTC, set the Blend control to the max cool position. On ATC, set the Driver temperature control to LO (max cool). Turn the ATC's or MTC's Power switch off. With the DRBIII®, record and erase Cabin Heater and FCM DTCs. Start the engine. Allow the engine to idle. Turn the ATC's or MTC's Power switch on. Turn the Blower control to the high speed position. **CAUTION: Do not activate the DCHA Field Mode Test with the engine off. Failure to follow these instructions can result in internal damage to the DCHA Heater Module.** **NOTE: Do not disconnect the vehicle's battery or the DCHA's main power supply while the DCHA is in operation or in run-down mode. Failure to follow these instructions can result in excess emissions from the DCHA during heater operation.** With the DRBIII® in Cabin Heater, Systems Tests, select Field Mode and press Enter. The test will run for approx 8.5 minutes. On MTC, set the Blend control to the max heat position. Upon completion of the Field Mode Test, proceed as follows: On ATC, set the Driver temperature control to HI (max heat). Upon completion of the Field Mode Test, proceed as follows: With the DRBIII®, read Cabin Heater and Active FCM DTCs. Turn the Blower control off and turn the ATC's or MTC's Power switch off. Turn the engine off. Are any DTCs present? Yes → Return to the symptom list and choose the DTC(s). Diagnose and repair all FCM faults prior to diagnosing DCHA faults. If DTC B1813 Heater In Lockout Mode reset with other DTC(s), reset the heater before diagnosing the other DTC(s). Perform CABIN HEATER VERIFICATION TEST - VER 1. No → Go To 5	All

A. CABIN HEATER PRE-TEST — Continued

TEST	ACTION	APPLICABILITY
5	Is the symptom Cabin Heater inoperable from the ATC or from the MTC? Yes - MTC Refer to symptom *Cabin Heater Inoperable From A/C - Heater Module (MTC) in the Cabin Heater category. Perform CABIN HEATER VERIFICATION TEST - VER 1. Yes - ATC Refer to symptom *Cabin Heater Inoperable From Auto Temp Control (ATC) in the Cabin Heater category. Perform CABIN HEATER VERIFICATION TEST - VER 1. No → Let DCHA cool. Inspect fuel line, intake & exhaust, & coolant hoses for restrictions, obstructions, loose clamps, leakage, etc. Check connectors. Clean & repair as necessary. Refer to Service Manual for additional symptom based diagnosis, if necessary. Perform CABIN HEATER VERIFICATION TEST - VER 1.	All

Symptom:
B1000 CONTROL UNIT ERRONEOUS

When Monitored and Set Condition:

B1000 CONTROL UNIT ERRONEOUS

When Monitored: During DCHA activation.

Set Condition: This DTC will set if a fault occurs with the DCHA Control Unit's memory.

POSSIBLE CAUSES
DCHA CONTROL UNIT FAULT

TEST	ACTION	APPLICABILITY
1	**WARNING: DO NOT OPERATE THE DCHA IN AN ENCLOSED AREA SUCH AS A GARAGE THAT DOES NOT HAVE EXHAUST VENTILATION FACILITIES. ALWAYS VENT THE DCHA's EXHAUST WHEN OPERATING THE DCHA. FAILURE TO FOLLOW THESE INSTRUCTIONS CAN RESULT IN PERSONAL INJURY OR DEATH.** **WARNING: ALLOW THE DCHA ASSEMBLY TO COOL BEFORE PERFORMING A COMPONENT INSPECTION/REPAIR/REPLACEMENT. FAILURE TO FOLLOW THESE INSTRUCTIONS CAN RESULT IN PERSONAL INJURY OR DEATH.** **CAUTION: DO NOT PERFORM THIS TEST UNLESS DIRECTED HERE BY THE CABIN HEATER PRE-TEST. ALWAYS PERFORM THE CABIN HEATER PRE-TEST PRIOR TO PERFORMING ANY OTHER CABIN HEATER TEST FOR THE RESULT TO BE VALID.** Turn the ignition off. View repair Repair Replace the DCHA Heater Module in accordance with the Service Information. Perform CABIN HEATER VERIFICATION TEST - VER 1.	All

Symptom List:

B1800 NO START
B1801 FLAME OUT: DURING HEATING CYCLE
B1801 FLAME OUT: UNSTABLE OPERATION

Test Note: All symptoms listed above are diagnosed using the same tests. The title for the tests will be B1800 NO START.

When Monitored and Set Condition:

B1800 NO START

When Monitored: After DCHA activation.

Set Condition: This DTC will set if the Flame Sensor resistance is not within the expected parameters 160 seconds after activation.

B1801 FLAME OUT: DURING HEATING CYCLE

When Monitored: After DCHA activation, and during subsequent start attempts.

Set Condition: This DTC will set if the Flame Sensor resistance is not within the expected parameters.

B1801 FLAME OUT: UNSTABLE OPERATION

When Monitored: After DCHA activation.

Set Condition: This DTC will set if the Flame Sensor resistance is not within the expected parameters.

POSSIBLE CAUSES
LOW FUEL LEVEL IN VEHICLE'S FUEL TANK
DOSING PUMP INOPERABLE, NO DOSING PUMP DTCS SET
DCHA FUEL LINE RESTRICTED/LEAKING/DAMAGED
DOSING PUMP
DCHA AIR INTAKE/EXHAUST RESTRICTED
DCHA HEATER MODULE FAULT

B1800 NO START — Continued

TEST	ACTION	APPLICABILITY
1	**WARNING: DO NOT OPERATE THE DCHA IN AN ENCLOSED AREA SUCH AS A GARAGE THAT DOES NOT HAVE EXHAUST VENTILATION FACILITIES. ALWAYS VENT THE DCHA's EXHAUST WHEN OPERATING THE DCHA. FAILURE TO FOLLOW THESE INSTRUCTIONS CAN RESULT IN PERSONAL INJURY OR DEATH.** **CAUTION: DO NOT PERFORM THIS TEST UNLESS DIRECTED HERE BY THE CABIN HEATER PRE-TEST. ALWAYS PERFORM THE CABIN HEATER PRE-TEST PRIOR TO PERFORMING ANY OTHER CABIN HEATER TEST FOR THE RESULT TO BE VALID.** Verify that there is more than an 1/8 of a tank of fuel in the vehicle's fuel tank. Is there more than an 1/8 of a tank of fuel in the vehicle's fuel tank? Yes → Go To 2 No → Add fuel to the vehicle's fuel tank to bring the fuel level above 1/8 of a tank. Perform CABIN HEATER VERIFICATION TEST - VER 1.	All
2	**WARNING: DO NOT OPERATE THE DCHA IN AN ENCLOSED AREA SUCH AS A GARAGE THAT DOES NOT HAVE EXHAUST VENTILATION FACILITIES. ALWAYS VENT THE DCHA's EXHAUST WHEN OPERATING THE DCHA. FAILURE TO FOLLOW THESE INSTRUCTIONS CAN RESULT IN PERSONAL INJURY OR DEATH.** **WARNING: ALLOW THE DCHA ASSEMBLY TO COOL BEFORE PERFORMING A COMPONENT INSPECTION/REPAIR/REPLACEMENT. FAILURE TO FOLLOW THESE INSTRUCTIONS CAN RESULT IN PERSONAL INJURY OR DEATH.** Turn the ignition on. **CAUTION: Do not actuate the Dosing Pump more than two times. Doing so will put excess fuel in the DCHA Heater Module and cause smoke to emit from the DCHA exhaust pipe when heater activation occurs.** With the DRBIII® in Actuators, select Dosing Pump. Listen for the pump to run. A clicking noise should be heard coming from the pump. Press Page Back and select No to stop the Dosing Pump actuation. Does the Dosing Pump run when actuated? Yes → Go To 3 No → Replace the Dosing Pump in accordance with the Service Information. Perform CABIN HEATER VERIFICATION TEST - VER 1.	All

B1800 NO START — Continued

TEST	ACTION	APPLICABILITY
3	**WARNING: DO NOT OPERATE THE DCHA IN AN ENCLOSED AREA SUCH AS A GARAGE THAT DOES NOT HAVE EXHAUST VENTILATION FACILITIES. ALWAYS VENT THE DCHA's EXHAUST WHEN OPERATING THE DCHA. FAILURE TO FOLLOW THESE INSTRUCTIONS CAN RESULT IN PERSONAL INJURY OR DEATH.** **WARNING: ALLOW THE DCHA ASSEMBLY TO COOL BEFORE PERFORMING A COMPONENT INSPECTION/REPAIR/REPLACEMENT. FAILURE TO FOLLOW THESE INSTRUCTIONS CAN RESULT IN PERSONAL INJURY OR DEATH.** Turn the ignition off. Inspect the DCHA fuel line exterior for restrictions, leakage, and damage. Verify that the DCHA fuel line is installed correctly. **NOTE: Waxed fuel can obstruct the fuel line and reduce flow. Check for the appropriate winter grade fuel and replace as necessary.** Check for obstructions in the fuel line. Refer to Fuel Line, Cleaning in the Service Information. Is the DCHA fuel line Ok? Yes → Go To 4 No → Repair the DCHA fuel line as necessary in accordance with the Service Information. Perform CABIN HEATER VERIFICATION TEST - VER 1.	All
4	**WARNING: DO NOT OPERATE THE DCHA IN AN ENCLOSED AREA SUCH AS A GARAGE THAT DOES NOT HAVE EXHAUST VENTILATION FACILITIES. ALWAYS VENT THE DCHA's EXHAUST WHEN OPERATING THE DCHA. FAILURE TO FOLLOW THESE INSTRUCTIONS CAN RESULT IN PERSONAL INJURY OR DEATH.** **WARNING: ALLOW THE DCHA ASSEMBLY TO COOL BEFORE PERFORMING A COMPONENT INSPECTION/REPAIR/REPLACEMENT. FAILURE TO FOLLOW THESE INSTRUCTIONS CAN RESULT IN PERSONAL INJURY OR DEATH.** Turn the ignition off. Disconnect the Dosing Pump rubber insulators from the splash shield. Disconnect the fuel line from the fuel outlet side of the Dosing Pump. Using a suitable length of fuel line, connect one end to the fuel outlet side of the Dosing Pump and place the other end in a suitable container. Turn the ignition on. **CAUTION: For the result of this test to be valid, actuate the Dosing Pump Prime twice if the DCHA fuel supply line was drained and then not primed prior to performing this test.** **NOTE: Allow the Dosing Pump Prime to run the full 45 seconds.** With the DRBIII® in System Tests, select Dosing Pump Prime. When the Dosing Pump Prime is complete, measure the amount of fuel in the container. Does the Dosing Pump output approx 14 ml (0.5 oz) of fuel in a single Dosing Pump Prime activation? Yes → Go To 5 No → Replace the Dosing Pump in accordance with the Service Information. Perform CABIN HEATER VERIFICATION TEST - VER 1.	All

B1800 NO START — Continued

TEST	ACTION	APPLICABILITY
5	**WARNING: DO NOT OPERATE THE DCHA IN AN ENCLOSED AREA SUCH AS A GARAGE THAT DOES NOT HAVE EXHAUST VENTILATION FACILITIES. ALWAYS VENT THE DCHA's EXHAUST WHEN OPERATING THE DCHA. FAILURE TO FOLLOW THESE INSTRUCTIONS CAN RESULT IN PERSONAL INJURY OR DEATH.** **WARNING: ALLOW THE DCHA ASSEMBLY TO COOL BEFORE PERFORMING A COMPONENT INSPECTION/REPAIR/REPLACEMENT. FAILURE TO FOLLOW THESE INSTRUCTIONS CAN RESULT IN PERSONAL INJURY OR DEATH.** Turn the ignition off. Inspect the DCHA air intake pipe and exhaust pipe for restrictions and obstructions. Is the DCHA air intake pipe and exhaust pipe Ok? Yes → Replace the DCHA Heater Module in accordance with the Service Information. Perform CABIN HEATER VERIFICATION TEST - VER 1. No → Repair the DCHA air intake/exhaust as necessary in accordance with the Service Information. Perform CABIN HEATER VERIFICATION TEST - VER 1.	All

Symptom:

B1802 POWER SUPPLY OUT OF RANGE: LOW VOLTAGE THRESHOLD

When Monitored and Set Condition:

B1802 POWER SUPPLY OUT OF RANGE: LOW VOLTAGE THRESHOLD

When Monitored: With the engine running.

Set Condition: This DTC will set if the DCHA's power supply voltage drops below 10.0 volts for longer than 20 seconds.

POSSIBLE CAUSES
FIELD MODE TEST RUN WITH THE ENGINE OFF
VEHICLE'S BATTERY SYSTEM
VEHICLE'S CHARGING SYSTEM NOT OPERATING PROPERLY
DCHA CONTROL UNIT FAULT
FUSED B+ CIRCUIT HIGH RESISTANCE
DCHA CONTROL UNIT FAULT

TEST	ACTION	APPLICABILITY
1	**WARNING: DO NOT OPERATE THE DCHA IN AN ENCLOSED AREA SUCH AS A GARAGE THAT DOES NOT HAVE EXHAUST VENTILATION FACILITIES. ALWAYS VENT THE DCHA's EXHAUST WHEN OPERATING THE DCHA. FAILURE TO FOLLOW THESE INSTRUCTIONS CAN RESULT IN PERSONAL INJURY OR DEATH.** **CAUTION: DO NOT PERFORM THIS TEST UNLESS DIRECTED HERE BY THE CABIN HEATER PRE-TEST. ALWAYS PERFORM THE CABIN HEATER PRE-TEST PRIOR TO PERFORMING ANY OTHER CABIN HEATER TEST FOR THE RESULT TO BE VALID.** Was the Field Mode Test run with the engine off? Yes → Rerun the Field Mode Test exactly as it is described in Test 4 of the Cabin Heater Pre-Test. If DTC B1802 resets, Go To Test #2 of this symptom. Otherwise, perform other diagnosis and testing as necessary. Perform CABIN HEATER VERIFICATION TEST - VER 1. No → Go To 2	All

B1802 POWER SUPPLY OUT OF RANGE: LOW VOLTAGE THRESHOLD — Continued

TEST	ACTION	APPLICABILITY
2	**WARNING: DO NOT OPERATE THE DCHA IN AN ENCLOSED AREA SUCH AS A GARAGE THAT DOES NOT HAVE EXHAUST VENTILATION FACILITIES. ALWAYS VENT THE DCHA's EXHAUST WHEN OPERATING THE DCHA. FAILURE TO FOLLOW THESE INSTRUCTIONS CAN RESULT IN PERSONAL INJURY OR DEATH.** Turn the ignition off. Inspect the vehicle's battery terminals, cable terminals, and cables for corrosion and damage in accordance with the Service Information. Test the vehicle's battery in accordance with the Service Information. Is the vehicle's battery system Ok? Yes → Go To 3 No → Clean/repair the vehicle's battery system in accordance with the Service Information. Perform CABIN HEATER VERIFICATION TEST - VER 1.	All
3	**WARNING: DO NOT OPERATE THE DCHA IN AN ENCLOSED AREA SUCH AS A GARAGE THAT DOES NOT HAVE EXHAUST VENTILATION FACILITIES. ALWAYS VENT THE DCHA's EXHAUST WHEN OPERATING THE DCHA. FAILURE TO FOLLOW THESE INSTRUCTIONS CAN RESULT IN PERSONAL INJURY OR DEATH.** Check the vehicle's charging system for proper operation in accordance with the Service Information. Is the vehicle's charging system operating properly? Yes → Go To 4 No → Repair the vehicle's charging system in accordance with the Service Information. Perform CABIN HEATER VERIFICATION TEST - VER 1.	All
4	**WARNING: DO NOT OPERATE THE DCHA IN AN ENCLOSED AREA SUCH AS A GARAGE THAT DOES NOT HAVE EXHAUST VENTILATION FACILITIES. ALWAYS VENT THE DCHA's EXHAUST WHEN OPERATING THE DCHA. FAILURE TO FOLLOW THESE INSTRUCTIONS CAN RESULT IN PERSONAL INJURY OR DEATH.** **WARNING: ALLOW THE DCHA ASSEMBLY TO COOL BEFORE PERFORMING A COMPONENT INSPECTION/REPAIR/REPLACEMENT. FAILURE TO FOLLOW THESE INSTRUCTIONS CAN RESULT IN PERSONAL INJURY OR DEATH.** Turn the ignition on. With the DRBIII® in Sensors, record the DCHA Operating Voltage. Disconnect the Cabin Heater Assist C1 harness connector. Measure the voltage between the Fused B+ circuit and ground. Is there more than 1.0 volt difference between the Operating Voltage and the Fused B+ voltage? Yes → Replace the DCHA Heater Module in accordance with the Service Information. Perform CABIN HEATER VERIFICATION TEST - VER 1. No → Go To 5	All

B1802 POWER SUPPLY OUT OF RANGE: LOW VOLTAGE THRESHOLD — Continued

TEST	ACTION	APPLICABILITY
5	**WARNING: DO NOT OPERATE THE DCHA IN AN ENCLOSED AREA SUCH AS A GARAGE THAT DOES NOT HAVE EXHAUST VENTILATION FACILITIES. ALWAYS VENT THE DCHA's EXHAUST WHEN OPERATING THE DCHA. FAILURE TO FOLLOW THESE INSTRUCTIONS CAN RESULT IN PERSONAL INJURY OR DEATH.** **WARNING: ALLOW THE DCHA ASSEMBLY TO COOL BEFORE PERFORMING A COMPONENT INSPECTION/REPAIR/REPLACEMENT. FAILURE TO FOLLOW THESE INSTRUCTIONS CAN RESULT IN PERSONAL INJURY OR DEATH.** Make sure that the Cabin Heater Assist C1 harness connector is connected to the DCHA. Connect a suitable voltmeter to the vehicle's battery. Position the voltmeter where it can be monitored while operating the DRBIII®. Turn the ignition on. On MTC, set the Blend control to the max cool position. On ATC, set the Driver temperature control to LO (max cool). Turn the ATC's or MTC's Power switch off. Start the engine. Allow the engine to idle. Turn the ATC's or MTC's Power switch on. Turn the Blower control to the high speed position. **CAUTION: Do not activate the DCHA Field Mode Test with the engine off. Failure to follow these instructions can result in internal damage to the DCHA Heater Module.** **NOTE: Do not disconnect the vehicle's battery or the DCHA's main power supply while the DCHA is in operation or in run-down mode. Failure to follow these instructions can result in excess emissions from the DCHA during heater operation.** With the DRBIII® in Cabin Heater, Systems Tests, select Field Mode and press Enter. The test will run for approx 8.5 minutes. On MTC, set the Blend control to the max heat position. On ATC, set the Driver temperature control to HI (max heat). With the DRBIII® in Sensors, monitor the DCHA Operating Voltage and the voltmeter while the Field Mode Test is running. Upon completion of the Field Mode Test proceed as follows: Turn the Blower control off and turn the ATC's or MTC's Power switch off. Turn the engine off. Was there more than 1.5 volts difference between Operating & battery voltage during the test? Yes → Repair the high resistance in the Fused B+ circuit. Perform CABIN HEATER VERIFICATION TEST - VER 1. No → Replace the DCHA Heater Module in accordance with the Service Information. Perform CABIN HEATER VERIFICATION TEST - VER 1.	All

Symptom:

B1802 POWER SUPPLY OUT OF RANGE: VOLTAGE ABOVE 15.5 VOLTS

When Monitored and Set Condition:

B1802 POWER SUPPLY OUT OF RANGE: VOLTAGE ABOVE 15.5 VOLTS

When Monitored: With the engine running.

Set Condition: This DTC will set if the DCHA's power supply voltage exceeds 15.5 volts for longer than six seconds.

POSSIBLE CAUSES
VEHICLE'S CHARGING SYSTEM OVERCHARGING
DCHA CONTROL UNIT FAULT

TEST	ACTION	APPLICABILITY
1	**WARNING: DO NOT OPERATE THE DCHA IN AN ENCLOSED AREA SUCH AS A GARAGE THAT DOES NOT HAVE EXHAUST VENTILATION FACILITIES. ALWAYS VENT THE DCHA's EXHAUST WHEN OPERATING THE DCHA. FAILURE TO FOLLOW THESE INSTRUCTIONS CAN RESULT IN PERSONAL INJURY OR DEATH.** **WARNING: ALLOW THE DCHA ASSEMBLY TO COOL BEFORE PERFORMING A COMPONENT INSPECTION/REPAIR/REPLACEMENT. FAILURE TO FOLLOW THESE INSTRUCTIONS CAN RESULT IN PERSONAL INJURY OR DEATH.** **CAUTION: DO NOT PERFORM THIS TEST UNLESS DIRECTED HERE BY THE CABIN HEATER PRE-TEST. ALWAYS PERFORM THE CABIN HEATER PRE-TEST PRIOR TO PERFORMING ANY OTHER CABIN HEATER TEST FOR THE RESULT TO BE VALID.** Check the vehicle's charging system for proper operation in accordance with the Service Information. Is the vehicle's charging system operating properly? Yes → Replace the DCHA Heater Module in accordance with the Service Information. Perform CABIN HEATER VERIFICATION TEST - VER 1. No → Repair the vehicle's charging system in accordance with the Service Information. Perform CABIN HEATER VERIFICATION TEST - VER 1.	All

Symptom:
B1803 FLAME DETECTED PRIOR TO COMBUSTION

When Monitored and Set Condition:

B1803 FLAME DETECTED PRIOR TO COMBUSTION

When Monitored: During DCHA start up.

Set Condition: This DTC will set if the Flame Sensor resistance is not within the expected parameters.

POSSIBLE CAUSES
FLAME SENSOR FAULT

TEST	ACTION	APPLICABILITY
1	**WARNING: DO NOT OPERATE THE DCHA IN AN ENCLOSED AREA SUCH AS A GARAGE THAT DOES NOT HAVE EXHAUST VENTILATION FACILITIES. ALWAYS VENT THE DCHA's EXHAUST WHEN OPERATING THE DCHA. FAILURE TO FOLLOW THESE INSTRUCTIONS CAN RESULT IN PERSONAL INJURY OR DEATH.** **WARNING: ALLOW THE DCHA ASSEMBLY TO COOL BEFORE PERFORMING A COMPONENT INSPECTION/REPAIR/REPLACEMENT. FAILURE TO FOLLOW THESE INSTRUCTIONS CAN RESULT IN PERSONAL INJURY OR DEATH.** **CAUTION: DO NOT PERFORM THIS TEST UNLESS DIRECTED HERE BY THE CABIN HEATER PRE-TEST. ALWAYS PERFORM THE CABIN HEATER PRE-TEST PRIOR TO PERFORMING ANY OTHER CABIN HEATER TEST FOR THE RESULT TO BE VALID.** Turn the ignition off. View repair Repair Replace the DCHA Heater Module in accordance with the Service Information. Perform CABIN HEATER VERIFICATION TEST - VER 1.	All

Symptom:

B1811 HEATER OVERHEATED

When Monitored and Set Condition:

B1811 HEATER OVERHEATED

When Monitored: After DCHA activation, when the system is in a steady state of operation.

Set Condition: This DTC will set if the Coolant Temperature Sensor resistance is not within the expected parameters (coolant temperature in the Heater Module exceeds 125°C [257°F]).

POSSIBLE CAUSES
DCHA HEATER MODULE FAULT
DCHA COOLANT HOSES RESTRICTED/LEAKING/DAMAGED
ENGINE'S COOLING SYSTEM FAULT
DCHA CONTROL UNIT FAULT
B1811 CLEARED, ADDITIONAL DTC(S) PRESENT

TEST	ACTION	APPLICABILITY
1	**WARNING: DO NOT OPERATE THE DCHA IN AN ENCLOSED AREA SUCH AS A GARAGE THAT DOES NOT HAVE EXHAUST VENTILATION FACILITIES. ALWAYS VENT THE DCHA's EXHAUST WHEN OPERATING THE DCHA. FAILURE TO FOLLOW THESE INSTRUCTIONS CAN RESULT IN PERSONAL INJURY OR DEATH.** **WARNING: ALLOW THE DCHA ASSEMBLY TO COOL BEFORE PERFORMING A COMPONENT INSPECTION/REPAIR/REPLACEMENT. FAILURE TO FOLLOW THESE INSTRUCTIONS CAN RESULT IN PERSONAL INJURY OR DEATH.** **CAUTION: DO NOT PERFORM THIS TEST UNLESS DIRECTED HERE BY THE CABIN HEATER PRE-TEST. ALWAYS PERFORM THE CABIN HEATER PRE-TEST PRIOR TO PERFORMING ANY OTHER CABIN HEATER TEST FOR THE RESULT TO BE VALID.** Turn the ignition off. **NOTE: If there is an internal leak in the Heater Module, a continuous loud chunking or grinding noise may have been heard coming from the DCHA assembly during the Field Mode test.** Check for engine coolant continuously flowing out of the DCHA exhaust pipe. Is engine coolant coming out of the DCHA exhaust pipe? Yes → Replace the DCHA Heater Module in accordance with the Service Information. Perform CABIN HEATER VERIFICATION TEST - VER 1. No → Go To 2	All

B1811 HEATER OVERHEATED — Continued

TEST	ACTION	APPLICABILITY
2	**WARNING: DO NOT OPERATE THE DCHA IN AN ENCLOSED AREA SUCH AS A GARAGE THAT DOES NOT HAVE EXHAUST VENTILATION FACILITIES. ALWAYS VENT THE DCHA's EXHAUST WHEN OPERATING THE DCHA. FAILURE TO FOLLOW THESE INSTRUCTIONS CAN RESULT IN PERSONAL INJURY OR DEATH.** **WARNING: ALLOW THE DCHA ASSEMBLY TO COOL BEFORE PERFORMING A COMPONENT INSPECTION/REPAIR/REPLACEMENT. FAILURE TO FOLLOW THESE INSTRUCTIONS CAN RESULT IN PERSONAL INJURY OR DEATH.** Turn the ignition off. Inspect the DCHA coolant hoses for restrictions, leakage, and damage. Are the DCHA coolant hoses Ok? Yes → Go To 3 No → Repair the DCHA coolant hoses as necessary in accordance with the Service Information. Perform CABIN HEATER VERIFICATION TEST - VER 1.	All
3	**WARNING: DO NOT OPERATE THE DCHA IN AN ENCLOSED AREA SUCH AS A GARAGE THAT DOES NOT HAVE EXHAUST VENTILATION FACILITIES. ALWAYS VENT THE DCHA's EXHAUST WHEN OPERATING THE DCHA. FAILURE TO FOLLOW THESE INSTRUCTIONS CAN RESULT IN PERSONAL INJURY OR DEATH.** Check that the engine's cooling system is operating properly in accordance with the Service Information. Is the engine's cooling system operating properly? Yes → Go To 4 No → Repair the engine's cooling system in accordance with the Service Information. Perform CABIN HEATER VERIFICATION TEST - VER 1.	All
4	**WARNING: DO NOT OPERATE THE DCHA IN AN ENCLOSED AREA SUCH AS A GARAGE THAT DOES NOT HAVE EXHAUST VENTILATION FACILITIES. ALWAYS VENT THE DCHA's EXHAUST WHEN OPERATING THE DCHA. FAILURE TO FOLLOW THESE INSTRUCTIONS CAN RESULT IN PERSONAL INJURY OR DEATH.** Start the engine. Allow the engine to reach normal operating temperature. Turn the engine off. Allow the engine's coolant to cool down to a temperature of 50°C (122°F). Start the engine. Allow the engine to reach normal operating temperature. Turn the engine off. View repair Repair Go To 5	All

B1811 HEATER OVERHEATED — Continued

TEST	ACTION	APPLICABILITY
5	**WARNING: DO NOT OPERATE THE DCHA IN AN ENCLOSED AREA SUCH AS A GARAGE THAT DOES NOT HAVE EXHAUST VENTILATION FACILITIES. ALWAYS VENT THE DCHA's EXHAUST WHEN OPERATING THE DCHA. FAILURE TO FOLLOW THESE INSTRUCTIONS CAN RESULT IN PERSONAL INJURY OR DEATH.** Start the engine. Allow the engine to idle. Turn the ATC's or MTC's Power switch on. Turn the Blower control to the high speed position. On MTC, set the Blend control to the max heat position. On ATC, set the Driver temperature control to HI (max heat). Remove the Cabin Heater fuse #15 from the IPM for a minimum of five seconds, then reinstall the fuse. The DCHA may attempt to start. Turn the Blower control off and turn the ATC's or MTC's Power switch off. Turn the engine off. View repair Repair Go To 6	All

B1811 HEATER OVERHEATED — Continued

TEST	ACTION	APPLICABILITY
6	**WARNING: DO NOT OPERATE THE DCHA IN AN ENCLOSED AREA SUCH AS A GARAGE THAT DOES NOT HAVE EXHAUST VENTILATION FACILITIES. ALWAYS VENT THE DCHA's EXHAUST WHEN OPERATING THE DCHA. FAILURE TO FOLLOW THESE INSTRUCTIONS CAN RESULT IN PERSONAL INJURY OR DEATH.** **NOTE: The DCHA Control will store up to three DTCs in its memory.** **NOTE: If the DCHA Control detects a new fault in the DCHA system, one that is not already stored in its memory, the DCHA Control will clear the oldest of the three stored DTCs, and it will store the new fault's DTC.** **NOTE: If the DCHA control detects a reoccurrence of a stored fault, the DCHA control will overwrite that fault's DTC with the most recent occurrence.** Turn the ignition on. On MTC, set the Blend control to the max cool position. On ATC, set the Driver temperature control to LO (max cool). Turn the ATC's or MTC's Power switch off. With the DRBIII®, erase Cabin Heater DTCs. Start the engine. Allow the engine to idle. Turn the ATC's or MTC's Power switch on. Turn the Blower control to the high speed position. **CAUTION: Do not activate the DCHA Field Mode Test with the engine off. Failure to follow these instructions can result in internal damage to the DCHA Heater Module.** **NOTE: Do not disconnect the vehicle's battery or the DCHA's main power supply while the DCHA is in operation or in run-down mode. Failure to follow these instructions can result in excess emissions from the DCHA during heater operation.** With the DRBIII® in Cabin Heater, Systems Tests, select Field Mode and press Enter. The test will run for approx 8.5 minutes. On MTC, set the Blend control to the max heat position. Upon completion of the Field Mode Test, proceed as follows: On ATC, set the Driver temperature control to HI (max heat). Upon completion of the Field Mode Test, proceed as follows: With the DRBIII®, read Cabin Heater and Active FCM DTCs. Turn the Blower control off and turn the ATC's or MTC's Power switch off. Turn the engine off. Are any DTCs present? Yes, B1811 & B1813 reset Replace the DCHA Heater Module in accordance with the Service Information. Perform CABIN HEATER VERIFICATION TEST - VER 1. Yes, B1811 Cleared, Other DTC(s) Present Return to the symptom list and choose the DTC(s). Perform CABIN HEATER VERIFICATION TEST - VER 1. No → Test Complete.	All

Symptom:
B1813 HEATER IN LOCKOUT MODE

When Monitored and Set Condition:

B1813 HEATER IN LOCKOUT MODE

When Monitored: During DCHA activation.

Set Condition: This DTC will set if six continuous attempts to start heater operation fail due to one or more faults in the DCHA system.

POSSIBLE CAUSES
B1813 AND ADDITIONAL DTC(S) PRESENT
B1813 RESET, NO ADDITIONAL DTC(S) PRESENT
B1813 CLEARED, ADDITIONAL DTC(S) PRESENT
STORED DCHA DTC(S) TEST COMPLETE

TEST	ACTION	APPLICABILITY
1	**WARNING: DO NOT OPERATE THE DCHA IN AN ENCLOSED AREA SUCH AS A GARAGE THAT DOES NOT HAVE EXHAUST VENTILATION FACILITIES. ALWAYS VENT THE DCHA's EXHAUST WHEN OPERATING THE DCHA. FAILURE TO FOLLOW THESE INSTRUCTIONS CAN RESULT IN PERSONAL INJURY OR DEATH.** Start the engine. Allow the engine to idle. Turn the ATC's or MTC's Power switch on. Turn the Blower control to the high speed position. On MTC, set the Blend control to the max heat position. On ATC, set the Driver temperature control to HI (max heat). Remove Cabin Heater Fuse #15 from the IPM for a minimum of five seconds, then reinstall the fuse. The DCHA may attempt to start. Turn the Blower control off and turn the ATC's or MTC's Power switch off. Turn the engine off. View repair Repair Go To 2	All

B1813 HEATER IN LOCKOUT MODE — Continued

TEST	ACTION	APPLICABILITY
2	**WARNING: DO NOT OPERATE THE DCHA IN AN ENCLOSED AREA SUCH AS A GARAGE THAT DOES NOT HAVE EXHAUST VENTILATION FACILITIES. ALWAYS VENT THE DCHA's EXHAUST WHEN OPERATING THE DCHA. FAILURE TO FOLLOW THESE INSTRUCTIONS CAN RESULT IN PERSONAL INJURY OR DEATH.** **NOTE: The DCHA Control will store up to three DTCs in its memory.** **NOTE: If the DCHA Control detects a new fault in the DCHA system, one that is not already stored in its memory, the DCHA Control will clear the oldest of the three stored DTCs, and it will store the new fault's DTC.** **NOTE: If the DCHA control detects a reoccurrence of a stored fault, the DCHA control will overwrite that fault's DTC with the most recent occurrence.** Turn the ignition on. On MTC, set the Blend control to the max cool position. On ATC, set the Driver temperature control to LO (max cool). Turn the ATC's or MTC's Power switch off. With the DRBIII®, record and erase Cabin Heater DTCs. Start the engine. Allow the engine to idle. Turn the ATC's or MTC's Power switch on. Turn the Blower control to the high speed position. **CAUTION: Do not activate the DCHA Field Mode Test with the engine off. Failure to follow these instructions can result in internal damage to the DCHA Heater Module.** **NOTE: Do not disconnect the vehicle's battery or the DCHA's main power supply while the DCHA is in operation or in run-down mode. Failure to follow these instructions can result in excess emissions from the DCHA during heater operation.** With the DRBIII® in Cabin Heater, Systems Tests, select Field Mode and press Enter. The test will run for approx 8.5 minutes. On MTC, set the Blend control to the max heat position. Upon completion of the Field Mode Test, proceed as follows: On ATC, set the Driver temperature control to HI (max heat). Upon completion of the Field Mode Test, proceed as follows: With the DRBIII®, read Cabin Heater and Active FCM DTCs. Turn the Blower control off and turn the ATC's or MTC's Power switch off. Turn the engine off. Are any DTCs present? Yes, B1813 & Other DTC(s) Present Return to the symptom list and choose the additional DTC(s) first, then diagnose B1813. Perform CABIN HEATER VERIFICATION TEST - VER 1. Yes, B1813 Reset with No Other DTC(s) Allow DCHA to cool. Inspect DCHA intake & exhaust pipes for restrictions & obstructions. Repair as necessary. After repair, repeat Test 2 of this procedure. If intake & exhaust pipes are Ok, replace DCHA Heater Module in accordance with Service Info. Perform CABIN HEATER VERIFICATION TEST - VER 1. Yes, B1813 Cleared, Other DTC(s) Present Return to the symptom list and choose the DTC(s). Perform CABIN HEATER VERIFICATION TEST - VER 1.	All

B1813 HEATER IN LOCKOUT MODE — Continued

TEST	ACTION	APPLICABILITY
	No → Allow DCHA to cool. Inspect fuel line & coolant hoses for restrictions, obstructions, loose clamps, leakage, etc. Repair as necessary. Check connectors. Clean & repair as necessary. Refer to Service Manual for additional symptom diagnosis, if necessary. Perform CABIN HEATER VERIFICATION TEST - VER 1.	

Symptom:
B1820 DOSING PUMP CIRCUIT: OPEN OR SHORT TO BATTERY

When Monitored and Set Condition:

B1820 DOSING PUMP CIRCUIT: OPEN OR SHORT TO BATTERY

When Monitored: With the ignition on.

Set Condition: This DTC will set if the DCHA Control detects no-load voltage on the Dosing Pump circuit output pin.

POSSIBLE CAUSES
DOSING PUMP CONTROL CIRCUIT SHORTED HIGH
DOSING PUMP CONTROL CIRCUIT OPEN
GROUND CIRCUIT OPEN
DOSING PUMP
DCHA CONTROL UNIT FAULT

TEST	ACTION	APPLICABILITY
1	**WARNING: DO NOT OPERATE THE DCHA IN AN ENCLOSED AREA SUCH AS A GARAGE THAT DOES NOT HAVE EXHAUST VENTILATION FACILITIES. ALWAYS VENT THE DCHA's EXHAUST WHEN OPERATING THE DCHA. FAILURE TO FOLLOW THESE INSTRUCTIONS CAN RESULT IN PERSONAL INJURY OR DEATH.** **WARNING: ALLOW THE DCHA ASSEMBLY TO COOL BEFORE PERFORMING A COMPONENT INSPECTION/REPAIR/REPLACEMENT. FAILURE TO FOLLOW THESE INSTRUCTIONS CAN RESULT IN PERSONAL INJURY OR DEATH.** **CAUTION: DO NOT PERFORM THIS TEST UNLESS DIRECTED HERE BY THE CABIN HEATER PRE-TEST. ALWAYS PERFORM THE CABIN HEATER PRE-TEST PRIOR TO PERFORMING ANY OTHER CABIN HEATER TEST FOR THE RESULT TO BE VALID.** **NOTE: If present, diagnose and repair DTC B1811 Heater Overheated and any other conditions relating to overheating before diagnosing this DTC.** Turn the ignition off. **NOTE: Check connectors - Clean/repair as necessary.** Disconnect the Cabin Heater Assist C1 harness connector. Turn the ignition on. Measure the voltage between the Dosing Pump Control circuit and ground. Is there any voltage present? Yes → Repair the Dosing Pump Control circuit for a short to voltage. Perform CABIN HEATER VERIFICATION TEST - VER 1. No → Go To 2	All

B1820 DOSING PUMP CIRCUIT: OPEN OR SHORT TO BATTERY — Continued

TEST	ACTION	APPLICABILITY
2	**WARNING: DO NOT OPERATE THE DCHA IN AN ENCLOSED AREA SUCH AS A GARAGE THAT DOES NOT HAVE EXHAUST VENTILATION FACILITIES. ALWAYS VENT THE DCHA's EXHAUST WHEN OPERATING THE DCHA. FAILURE TO FOLLOW THESE INSTRUCTIONS CAN RESULT IN PERSONAL INJURY OR DEATH.** **WARNING: ALLOW THE DCHA ASSEMBLY TO COOL BEFORE PERFORMING A COMPONENT INSPECTION/REPAIR/REPLACEMENT. FAILURE TO FOLLOW THESE INSTRUCTIONS CAN RESULT IN PERSONAL INJURY OR DEATH.** Turn the ignition off. **NOTE: Check connectors - Clean/repair as necessary.** Disconnect the Cabin Heater Assist C1 harness connector. **NOTE: Check connectors - Clean/repair as necessary.** Disconnect the Dosing Pump harness connector. Measure the resistance of the Dosing Pump Control circuit between the Dosing Pump harness connector and the Cabin Heater Assist C1 harness connector. Is the resistance below 5.0 ohms? Yes → Go To 3 No → Repair the Dosing Pump Control circuit for an open. Perform CABIN HEATER VERIFICATION TEST - VER 1.	All
3	**WARNING: DO NOT OPERATE THE DCHA IN AN ENCLOSED AREA SUCH AS A GARAGE THAT DOES NOT HAVE EXHAUST VENTILATION FACILITIES. ALWAYS VENT THE DCHA's EXHAUST WHEN OPERATING THE DCHA. FAILURE TO FOLLOW THESE INSTRUCTIONS CAN RESULT IN PERSONAL INJURY OR DEATH.** **WARNING: ALLOW THE DCHA ASSEMBLY TO COOL BEFORE PERFORMING A COMPONENT INSPECTION/REPAIR/REPLACEMENT. FAILURE TO FOLLOW THESE INSTRUCTIONS CAN RESULT IN PERSONAL INJURY OR DEATH.** Turn the ignition off. **NOTE: Check connectors - Clean/repair as necessary.** Disconnect the Cabin Heater Assist C2 harness connector. **NOTE: Check connectors - Clean/repair as necessary.** Disconnect the Dosing Pump harness connector. Measure the resistance of the Ground circuit between the Dosing Pump harness connector and the Cabin Heater Assist C2 harness connector. Is the resistance below 5.0 ohms? Yes → Go To 4 No → Repair the Ground circuit for an open. Perform CABIN HEATER VERIFICATION TEST - VER 1.	All

B1820 DOSING PUMP CIRCUIT: OPEN OR SHORT TO BATTERY — Continued

TEST	ACTION	APPLICABILITY
4	**WARNING: DO NOT OPERATE THE DCHA IN AN ENCLOSED AREA SUCH AS A GARAGE THAT DOES NOT HAVE EXHAUST VENTILATION FACILITIES. ALWAYS VENT THE DCHA's EXHAUST WHEN OPERATING THE DCHA. FAILURE TO FOLLOW THESE INSTRUCTIONS CAN RESULT IN PERSONAL INJURY OR DEATH.** **WARNING: ALLOW THE DCHA ASSEMBLY TO COOL BEFORE PERFORMING A COMPONENT INSPECTION/REPAIR/REPLACEMENT. FAILURE TO FOLLOW THESE INSTRUCTIONS CAN RESULT IN PERSONAL INJURY OR DEATH.** Turn the ignition off. **NOTE: Check connectors - Clean/repair as necessary.** Disconnect the Dosing Pump harness connector. Disconnect the Dosing Pump rubber insulators from the splash shield. Measure the resistance of the Dosing Pump. Is the resistance between 3.0 and 10.0 ohms? Yes → Replace the DCHA Heater Module in accordance with the Service Information. Perform CABIN HEATER VERIFICATION TEST - VER 1. No → Replace the Dosing Pump in accordance with the Service Information. Perform CABIN HEATER VERIFICATION TEST - VER 1.	All

Symptom:

B1820 DOSING PUMP CIRCUIT: SHORT TO GROUND

When Monitored and Set Condition:

B1820 DOSING PUMP CIRCUIT: SHORT TO GROUND

When Monitored: During Dosing Pump activation.

Set Condition: This DTC will set if the DCHA Control detects a high current draw on the Dosing Pump circuit output pin.

POSSIBLE CAUSES
DOSING PUMP SHORTED TO GROUND
DOSING PUMP CONTROL CIRCUIT SHORTED TO THE GROUND CIRCUIT
DOSING PUMP CONTROL CIRCUIT SHORTED TO GROUND
DCHA CONTROL UNIT FAULT

B1820 DOSING PUMP CIRCUIT: SHORT TO GROUND — Continued

TEST	ACTION	APPLICABILITY
1	**WARNING: DO NOT OPERATE THE DCHA IN AN ENCLOSED AREA SUCH AS A GARAGE THAT DOES NOT HAVE EXHAUST VENTILATION FACILITIES. ALWAYS VENT THE DCHA's EXHAUST WHEN OPERATING THE DCHA. FAILURE TO FOLLOW THESE INSTRUCTIONS CAN RESULT IN PERSONAL INJURY OR DEATH.** **WARNING: ALLOW THE DCHA ASSEMBLY TO COOL BEFORE PERFORMING A COMPONENT INSPECTION/REPAIR/REPLACEMENT. FAILURE TO FOLLOW THESE INSTRUCTIONS CAN RESULT IN PERSONAL INJURY OR DEATH.** **CAUTION: DO NOT PERFORM THIS TEST UNLESS DIRECTED HERE BY THE CABIN HEATER PRE-TEST. ALWAYS PERFORM THE CABIN HEATER PRE-TEST PRIOR TO PERFORMING ANY OTHER CABIN HEATER TEST FOR THE RESULT TO BE VALID.** **NOTE: If present, diagnose and repair DTC B1811 Heater Overheated and any other conditions relating to overheating before diagnosing this DTC.** Turn the ignition off. **NOTE: Check connectors - Clean/repair as necessary.** Disconnect the Dosing Pump harness connector. Turn the ignition on. On MTC, set the Blend control to the max cool position. On ATC, set the Driver temperature control to LO (max cool). Turn the ATC's or MTC's Power switch off. With the DRBIII®, erase Cabin Heater DTCs. Start the engine. Allow the engine to idle. Turn the ATC's or MTC's Power switch on. Turn the Blower control to the high speed position. **CAUTION: Do not activate the DCHA Field Mode Test with the engine off. Failure to follow these instructions can result in internal damage to the DCHA Heater Module.** **NOTE: Do not disconnect the vehicle's battery or the DCHA's main power supply while the DCHA is in operation or in run-down mode. Failure to follow these instructions can result in excess emissions from the DCHA during heater operation.** With the DRBIII® in Cabin Heater, Systems Tests, select Field Mode and press Enter. The test will run for approx 8.5 minutes. On MTC, set the Blend control to the max heat position. Upon completion of the Field Mode Test, proceed as follows: On ATC, set the Driver temperature control to HI (max heat). Upon completion of the Field Mode Test, proceed as follows: With the DRBIII®, read Cabin Heater DTCs. Turn the Blower control off and turn the ATC's or MTC's Power switch off. Turn the engine off. Is DTC B1820 Dosing Pump Circuit: Short to Ground present? Yes → Go To 2 No → Replace the Dosing Pump in accordance with the Service Information. Perform CABIN HEATER VERIFICATION TEST - VER 1.	All

B1820 DOSING PUMP CIRCUIT: SHORT TO GROUND — Continued

TEST	ACTION	APPLICABILITY
2	**WARNING: DO NOT OPERATE THE DCHA IN AN ENCLOSED AREA SUCH AS A GARAGE THAT DOES NOT HAVE EXHAUST VENTILATION FACILITIES. ALWAYS VENT THE DCHA's EXHAUST WHEN OPERATING THE DCHA. FAILURE TO FOLLOW THESE INSTRUCTIONS CAN RESULT IN PERSONAL INJURY OR DEATH.** **WARNING: ALLOW THE DCHA ASSEMBLY TO COOL BEFORE PERFORMING A COMPONENT INSPECTION/REPAIR/REPLACEMENT. FAILURE TO FOLLOW THESE INSTRUCTIONS CAN RESULT IN PERSONAL INJURY OR DEATH.** Turn the ignition off. Disconnect the battery in accordance with the Service information. **NOTE: Check connectors - Clean/repair as necessary.** Disconnect the Dosing Pump harness connector. **NOTE: Check connectors - Clean/repair as necessary.** Disconnect the Cabin Heater Assist C1 and C2 harness connectors. Measure the resistance between the Dosing Pump Control circuit and the Ground circuit. Is the resistance below 10K ohms? Yes → Repair the Dosing Pump Control circuit for a short to the Ground circuit. Perform CABIN HEATER VERIFICATION TEST - VER 1. No → Go To 3	All
3	**WARNING: DO NOT OPERATE THE DCHA IN AN ENCLOSED AREA SUCH AS A GARAGE THAT DOES NOT HAVE EXHAUST VENTILATION FACILITIES. ALWAYS VENT THE DCHA's EXHAUST WHEN OPERATING THE DCHA. FAILURE TO FOLLOW THESE INSTRUCTIONS CAN RESULT IN PERSONAL INJURY OR DEATH.** **WARNING: ALLOW THE DCHA ASSEMBLY TO COOL BEFORE PERFORMING A COMPONENT INSPECTION/REPAIR/REPLACEMENT. FAILURE TO FOLLOW THESE INSTRUCTIONS CAN RESULT IN PERSONAL INJURY OR DEATH.** Turn the ignition off. Disconnect the battery in accordance with the Service information. **NOTE: Check connectors - Clean/repair as necessary.** Disconnect the Dosing Pump harness connector. **NOTE: Check connectors - Clean/repair as necessary.** Disconnect the Cabin Heater Assist C1 harness connector. Measure the resistance between ground and the Dosing Pump Control circuit. Is the resistance below 10K ohms? Yes → Repair the Dosing Pump Control circuit for a short to ground. Perform CABIN HEATER VERIFICATION TEST - VER 1. No → Replace the DCHA Heater Module in accordance with the Service Information. Perform CABIN HEATER VERIFICATION TEST - VER 1.	All

Symptom List:

B1821 COMBUSTION AIR FAN CIRCUIT: OPEN
B1821 COMBUSTION AIR FAN CIRCUIT: SHORT TO GROUND

Test Note: All symptoms listed above are diagnosed using the same tests. The title for the tests will be B1821 COMBUSTION AIR FAN CIRCUIT: OPEN.

When Monitored and Set Condition:

B1821 COMBUSTION AIR FAN CIRCUIT: OPEN

When Monitored: After DCHA activation, when the system is in a steady state of operation.

Set Condition: This DTC will set if the DCHA Control detects no-load voltage on the Combustion Air Fan circuit output pin.

B1821 COMBUSTION AIR FAN CIRCUIT: SHORT TO GROUND

When Monitored: After DCHA activation, when the system is in a steady state of operation.

Set Condition: This DTC will set if the DCHA Control detects a high current draw on the Combustion Air Fan circuit output pin.

POSSIBLE CAUSES
COMBUSTION AIR FAN/DCHA CONTROL UNIT FAULT

TEST	ACTION	APPLICABILITY
1	**WARNING: DO NOT OPERATE THE DCHA IN AN ENCLOSED AREA SUCH AS A GARAGE THAT DOES NOT HAVE EXHAUST VENTILATION FACILITIES. ALWAYS VENT THE DCHA's EXHAUST WHEN OPERATING THE DCHA. FAILURE TO FOLLOW THESE INSTRUCTIONS CAN RESULT IN PERSONAL INJURY OR DEATH.** **WARNING: ALLOW THE DCHA ASSEMBLY TO COOL BEFORE PERFORMING A COMPONENT INSPECTION/REPAIR/REPLACEMENT. FAILURE TO FOLLOW THESE INSTRUCTIONS CAN RESULT IN PERSONAL INJURY OR DEATH.** **CAUTION: DO NOT PERFORM THIS TEST UNLESS DIRECTED HERE BY THE CABIN HEATER PRE-TEST. ALWAYS PERFORM THE CABIN HEATER PRE-TEST PRIOR TO PERFORMING ANY OTHER CABIN HEATER TEST FOR THE RESULT TO BE VALID.** **NOTE: If present, diagnose and repair DTC B1801 Flame Out before diagnosing this DTC.** Turn the ignition off. View repair Repair Replace the DCHA Heater Module in accordance with the Service Information. Perform CABIN HEATER VERIFICATION TEST - VER 1.	All

Symptom List:

B1822 GLOW PIN/FLAME SENSOR: OPEN
B1822 GLOW PIN/FLAME SENSOR: SHORT TO GROUND

Test Note: All symptoms listed above are diagnosed using the same tests. The title for the tests will be B1822 GLOW PIN/FLAME SENSOR: OPEN.

When Monitored and Set Condition:

B1822 GLOW PIN/FLAME SENSOR: OPEN

When Monitored: After DCHA activation.

Set Condition: This DTC will set if the Glow Pin resistance is not within the expected parameters.

B1822 GLOW PIN/FLAME SENSOR: SHORT TO GROUND

When Monitored: After DCHA activation, when the system is in a steady state of operation.

Set Condition: This DTC will set if the Glow Pin resistance is not within the expected parameters.

POSSIBLE CAUSES
GLOW PIN/HEATER MODULE FAULT

TEST	ACTION	APPLICABILITY
1	**WARNING: DO NOT OPERATE THE DCHA IN AN ENCLOSED AREA SUCH AS A GARAGE THAT DOES NOT HAVE EXHAUST VENTILATION FACILITIES. ALWAYS VENT THE DCHA's EXHAUST WHEN OPERATING THE DCHA. FAILURE TO FOLLOW THESE INSTRUCTIONS CAN RESULT IN PERSONAL INJURY OR DEATH.** **WARNING: ALLOW THE DCHA ASSEMBLY TO COOL BEFORE PERFORMING A COMPONENT INSPECTION/REPAIR/REPLACEMENT. FAILURE TO FOLLOW THESE INSTRUCTIONS CAN RESULT IN PERSONAL INJURY OR DEATH.** **CAUTION: DO NOT PERFORM THIS TEST UNLESS DIRECTED HERE BY THE CABIN HEATER PRE-TEST. ALWAYS PERFORM THE CABIN HEATER PRE-TEST PRIOR TO PERFORMING ANY OTHER CABIN HEATER TEST FOR THE RESULT TO BE VALID.** Turn the ignition off. View repair Repair Replace the DCHA Heater Module in accordance with the Service Information. Perform CABIN HEATER VERIFICATION TEST - VER 1.	All

Symptom List:

B1823 WATER PUMP CIRCUIT: OPEN
B1823 WATER PUMP CIRCUIT: SHORT TO GROUND

Test Note: All symptoms listed above are diagnosed using the same tests. The title for the tests will be B1823 WATER PUMP CIRCUIT: OPEN.

When Monitored and Set Condition:

B1823 WATER PUMP CIRCUIT: OPEN

When Monitored: During DCHA activation and operation.

Set Condition: This fault is erroneous for this DCHA assembly.

B1823 WATER PUMP CIRCUIT: SHORT TO GROUND

When Monitored: During DCHA activation and operation.

Set Condition: This fault is erroneous for this DCHA assembly.

POSSIBLE CAUSES
DCHA CONTROL UNIT FAULT

TEST	ACTION	APPLICABILITY
1	**WARNING: DO NOT OPERATE THE DCHA IN AN ENCLOSED AREA SUCH AS A GARAGE THAT DOES NOT HAVE EXHAUST VENTILATION FACILITIES. ALWAYS VENT THE DCHA's EXHAUST WHEN OPERATING THE DCHA. FAILURE TO FOLLOW THESE INSTRUCTIONS CAN RESULT IN PERSONAL INJURY OR DEATH.** **WARNING: ALLOW THE DCHA ASSEMBLY TO COOL BEFORE PERFORMING A COMPONENT INSPECTION/REPAIR/REPLACEMENT. FAILURE TO FOLLOW THESE INSTRUCTIONS CAN RESULT IN PERSONAL INJURY OR DEATH.** **CAUTION: DO NOT PERFORM THIS TEST UNLESS DIRECTED HERE BY THE CABIN HEATER PRE-TEST. ALWAYS PERFORM THE CABIN HEATER PRE-TEST PRIOR TO PERFORMING ANY OTHER CABIN HEATER TEST FOR THE RESULT TO BE VALID.** Turn the ignition off. View repair Repair Replace the DCHA Heater Module in accordance with the Service Information. Perform CABIN HEATER VERIFICATION TEST - VER 1.	All

Symptom:
B1824 FAN SWITCH LINE SHORT TO GROUND

When Monitored and Set Condition:

B1824 FAN SWITCH LINE SHORT TO GROUND

When Monitored: During DCHA activation and operation.

Set Condition: This fault is erroneous for this DCHA assembly.

POSSIBLE CAUSES
DCHA CONTROL UNIT FAULT

TEST	ACTION	APPLICABILITY
1	**WARNING: DO NOT OPERATE THE DCHA IN AN ENCLOSED AREA SUCH AS A GARAGE THAT DOES NOT HAVE EXHAUST VENTILATION FACILITIES. ALWAYS VENT THE DCHA's EXHAUST WHEN OPERATING THE DCHA. FAILURE TO FOLLOW THESE INSTRUCTIONS CAN RESULT IN PERSONAL INJURY OR DEATH.** **WARNING: ALLOW THE DCHA ASSEMBLY TO COOL BEFORE PERFORMING A COMPONENT INSPECTION/REPAIR/REPLACEMENT. FAILURE TO FOLLOW THESE INSTRUCTIONS CAN RESULT IN PERSONAL INJURY OR DEATH.** **CAUTION: DO NOT PERFORM THIS TEST UNLESS DIRECTED HERE BY THE CABIN HEATER PRE-TEST. ALWAYS PERFORM THE CABIN HEATER PRE-TEST PRIOR TO PERFORMING ANY OTHER CABIN HEATER TEST FOR THE RESULT TO BE VALID.** Turn the ignition off. View repair Repair Replace the DCHA Heater Module in accordance with the Service Information. Perform CABIN HEATER VERIFICATION TEST - VER 1.	All

Symptom:
CABIN HEATER CONTROL CIRCUIT OPEN (ACTIVE)

When Monitored and Set Condition:

CABIN HEATER CONTROL CIRCUIT OPEN (ACTIVE)

When Monitored: When the DCHA system is off

Set Condition: The DCHA Low Side Driver inside the FCM expects to see a system voltage of 13.8 volts through the DCHA relay coil when the DCHA system is off. This DTC will set if the FCM sees a voltage below 3.5 volts on the Cabin Heater Assist Control circuit during this time.

POSSIBLE CAUSES
NO RESPONSE FROM CABIN HEATER MODULE
CABIN HEATER ASSIST CONTROL CIRCUIT OPEN TO IPM
IPM, OPEN CIRCUIT
FCM, OPEN CIRCUIT
FCM FAULT
CABIN HEATER ASSIST CONTROL CIRCUIT SHORTED TO THE GROUND CIRCUIT
CABIN HEATER ASSIST CONTROL CIRCUIT SHORTED TO GROUND
CABIN HEATER ASSIST CONTROL CIRCUIT OPEN
DCHA CONTROL UNIT FAULT

TEST	ACTION	APPLICABILITY
1	**WARNING: DO NOT OPERATE THE DCHA IN AN ENCLOSED AREA SUCH AS A GARAGE THAT DOES NOT HAVE EXHAUST VENTILATION FACILITIES. ALWAYS VENT THE DCHA's EXHAUST WHEN OPERATING THE DCHA. FAILURE TO FOLLOW THESE INSTRUCTIONS CAN RESULT IN PERSONAL INJURY OR DEATH.** Turn the ignition on. With the DRBIII®, attempt to communicate with the Cabin Heater Module. Does the DRBIII® display: No Response From Cabin Heater Module? Yes → Refer to Communication for the related symptom. Perform CABIN HEATER VERIFICATION TEST - VER 1. No → Go To 2	All

CABIN HEATER CONTROL CIRCUIT OPEN (ACTIVE) — Continued

TEST	ACTION	APPLICABILITY
2	**WARNING: DO NOT OPERATE THE DCHA IN AN ENCLOSED AREA SUCH AS A GARAGE THAT DOES NOT HAVE EXHAUST VENTILATION FACILITIES. ALWAYS VENT THE DCHA's EXHAUST WHEN OPERATING THE DCHA. FAILURE TO FOLLOW THESE INSTRUCTIONS CAN RESULT IN PERSONAL INJURY OR DEATH.** Turn the ignition off. **NOTE: Check connectors - Clean/repair as necessary.** While back probing, measure the voltage of the Cabin Heater Assist Control circuit in the In-Line C330 harness connector. Is battery voltage present? Yes → Go To 3 No → Go To 5	All
3	**WARNING: DO NOT OPERATE THE DCHA IN AN ENCLOSED AREA SUCH AS A GARAGE THAT DOES NOT HAVE EXHAUST VENTILATION FACILITIES. ALWAYS VENT THE DCHA's EXHAUST WHEN OPERATING THE DCHA. FAILURE TO FOLLOW THESE INSTRUCTIONS CAN RESULT IN PERSONAL INJURY OR DEATH.** Turn the ignition off. Disconnect the battery in accordance with the Service information. **NOTE: Check connectors - Clean/repair as necessary.** Disconnect the IPM C3 harness connector. **NOTE: Check connectors - Clean/repair as necessary.** Disconnect the In-Line C330 harness connector. Measure the resistance of the Cabin Heater Assist Control circuit between the In-Line C330 harness connector and the IPM C3 harness connector. Is the resistance below 5.0 ohms? Yes → Go To 4 No → Repair the Cabin Heater Assist Control circuit for an open. Perform CABIN HEATER VERIFICATION TEST - VER 1.	All
4	**WARNING: DO NOT OPERATE THE DCHA IN AN ENCLOSED AREA SUCH AS A GARAGE THAT DOES NOT HAVE EXHAUST VENTILATION FACILITIES. ALWAYS VENT THE DCHA's EXHAUST WHEN OPERATING THE DCHA. FAILURE TO FOLLOW THESE INSTRUCTIONS CAN RESULT IN PERSONAL INJURY OR DEATH.** Turn the ignition off. Disconnect the battery in accordance with the Service information. Remove the FCM in accordance with the Service Information. **NOTE: Check connectors - Clean/repair as necessary.** Disconnect the IPM C3 harness connector. Measure the resistance of the Cabin Heater Assist Control circuit in the IPM (between IPM Cavity 11 for the C3 harness connector and IPM Cavity 15 for the FCM connector). Is the resistance below 5.0 ohms? Yes → Replace the FCM in accordance with the Service Information. Perform CABIN HEATER VERIFICATION TEST - VER 1. No → Replace the IPM in accordance with the Service Information. Perform CABIN HEATER VERIFICATION TEST - VER 1.	All

CABIN HEATER CONTROL CIRCUIT OPEN (ACTIVE) — Continued

TEST	ACTION	APPLICABILITY
5	**WARNING: DO NOT OPERATE THE DCHA IN AN ENCLOSED AREA SUCH AS A GARAGE THAT DOES NOT HAVE EXHAUST VENTILATION FACILITIES. ALWAYS VENT THE DCHA's EXHAUST WHEN OPERATING THE DCHA. FAILURE TO FOLLOW THESE INSTRUCTIONS CAN RESULT IN PERSONAL INJURY OR DEATH.** Turn the ignition off. Disconnect the battery in accordance with the Service information. Remove the FCM in accordance with the Service Information. Ensure the IPM and Cabin Heater harness connectors are connected. Reconnect the battery in accordance with the Service information. While back probing, measure the voltage of the Cabin Heater Assist Control circuit in the In-Line C330 harness connector. Is battery voltage present? Yes → Replace the FCM in accordance with the Service Information. Perform CABIN HEATER VERIFICATION TEST - VER 1. No → Go To 6	All
6	**WARNING: DO NOT OPERATE THE DCHA IN AN ENCLOSED AREA SUCH AS A GARAGE THAT DOES NOT HAVE EXHAUST VENTILATION FACILITIES. ALWAYS VENT THE DCHA's EXHAUST WHEN OPERATING THE DCHA. FAILURE TO FOLLOW THESE INSTRUCTIONS CAN RESULT IN PERSONAL INJURY OR DEATH.** **WARNING: ALLOW THE DCHA ASSEMBLY TO COOL BEFORE PERFORMING A COMPONENT INSPECTION/REPAIR/REPLACEMENT. FAILURE TO FOLLOW THESE INSTRUCTIONS CAN RESULT IN PERSONAL INJURY OR DEATH.** Turn the ignition off. Disconnect the battery in accordance with the Service information. **NOTE: Check connectors - Clean/repair as necessary.** Disconnect the IPM C3 harness connector. **NOTE: Check connectors - Clean/repair as necessary.** Disconnect the Cabin Heater Assist C1, C2, and Dosing Pump harness connectors. Measure the resistance between the Cabin Heater Assist Control circuit and the Ground circuit. Is the resistance below 10K ohms? Yes → Repair the Cabin Heater Assist Control circuit for a short to the Ground circuit. Perform CABIN HEATER VERIFICATION TEST - VER 1. No → Go To 7	All

CABIN HEATER CONTROL CIRCUIT OPEN (ACTIVE) — Continued

TEST	ACTION	APPLICABILITY
7	**WARNING: DO NOT OPERATE THE DCHA IN AN ENCLOSED AREA SUCH AS A GARAGE THAT DOES NOT HAVE EXHAUST VENTILATION FACILITIES. ALWAYS VENT THE DCHA's EXHAUST WHEN OPERATING THE DCHA. FAILURE TO FOLLOW THESE INSTRUCTIONS CAN RESULT IN PERSONAL INJURY OR DEATH.** **WARNING: ALLOW THE DCHA ASSEMBLY TO COOL BEFORE PERFORMING A COMPONENT INSPECTION/REPAIR/REPLACEMENT. FAILURE TO FOLLOW THESE INSTRUCTIONS CAN RESULT IN PERSONAL INJURY OR DEATH.** Turn the ignition off. Disconnect the battery in accordance with the Service information. **NOTE: Check connectors - Clean/repair as necessary.** Disconnect the IPM C3 harness connector. **NOTE: Check connectors - Clean/repair as necessary.** Disconnect the Cabin Heater Assist C1 harness connector. Measure the resistance between ground and the Cabin Heater Assist Control circuit. Is the resistance below 10K ohms? Yes → Repair the Cabin Heater Assist Control circuit for a short to ground. Perform CABIN HEATER VERIFICATION TEST - VER 1. No → Go To 8	All
8	**WARNING: DO NOT OPERATE THE DCHA IN AN ENCLOSED AREA SUCH AS A GARAGE THAT DOES NOT HAVE EXHAUST VENTILATION FACILITIES. ALWAYS VENT THE DCHA's EXHAUST WHEN OPERATING THE DCHA. FAILURE TO FOLLOW THESE INSTRUCTIONS CAN RESULT IN PERSONAL INJURY OR DEATH.** **WARNING: ALLOW THE DCHA ASSEMBLY TO COOL BEFORE PERFORMING A COMPONENT INSPECTION/REPAIR/REPLACEMENT. FAILURE TO FOLLOW THESE INSTRUCTIONS CAN RESULT IN PERSONAL INJURY OR DEATH.** Turn the ignition off. Disconnect the battery in accordance with the Service information. **NOTE: Check connectors - Clean/repair as necessary.** Disconnect the IPM C3 harness connector. **NOTE: Check connectors - Clean/repair as necessary.** Disconnect the Cabin Heater Assist C1 harness connector. Measure the resistance of the Cabin Heater Assist Control circuit between the Cabin Heater Assist C1 harness connector and the IPM C3 harness connector. Is the resistance below 5.0 ohms? Yes → Replace the DCHA Heater Module in accordance with the Service Information. Perform CABIN HEATER VERIFICATION TEST - VER 1. No → Repair the Cabin Heater Assist Control circuit for an open. Perform CABIN HEATER VERIFICATION TEST - VER 1.	All

Symptom:

CABIN HEATER CONTROL CIRCUIT SHORT TO BATTERY (ACTIVE)

When Monitored and Set Condition:

CABIN HEATER CONTROL CIRCUIT SHORT TO BATTERY (ACTIVE)

When Monitored: During DCHA activation and operation.

Set Condition: This DTC will set if the FCM sees a voltage between 5.0 and 15.0 volts on the Cabin Heater Assist Control circuit.

POSSIBLE CAUSES
DCHA CONTROL UNIT FAULT
CABIN HEATER ASSIST CONTROL CIRCUIT SHORTED TO THE FUSED B(+) CIRCUIT
FCM FAULT
CABIN HEATER ASSIST CONTROL CIRCUIT SHORTED HIGH

TEST	ACTION	APPLICABILITY
1	**WARNING: DO NOT OPERATE THE DCHA IN AN ENCLOSED AREA SUCH AS A GARAGE THAT DOES NOT HAVE EXHAUST VENTILATION FACILITIES. ALWAYS VENT THE DCHA's EXHAUST WHEN OPERATING THE DCHA. FAILURE TO FOLLOW THESE INSTRUCTIONS CAN RESULT IN PERSONAL INJURY OR DEATH.** **WARNING: ALLOW THE DCHA ASSEMBLY TO COOL BEFORE PERFORMING A COMPONENT INSPECTION/REPAIR/REPLACEMENT. FAILURE TO FOLLOW THESE INSTRUCTIONS CAN RESULT IN PERSONAL INJURY OR DEATH.** Turn the ignition off. **NOTE: Check connectors - Clean/repair as necessary.** Disconnect the Cabin Heater Assist C1 harness connector. Turn the ignition on. With the DRBIII® in FCM, read the active DTCs. Is the Cabin Heater Relay Short To Battery DTC still active? Yes → Go To 2 No → Replace the DCHA Heater Module in accordance with the Service Information. Perform CABIN HEATER VERIFICATION TEST - VER 1.	All

CABIN HEATER CONTROL CIRCUIT SHORT TO BATTERY (ACTIVE) — Continued

TEST	ACTION	APPLICABILITY
2	**WARNING: DO NOT OPERATE THE DCHA IN AN ENCLOSED AREA SUCH AS A GARAGE THAT DOES NOT HAVE EXHAUST VENTILATION FACILITIES. ALWAYS VENT THE DCHA's EXHAUST WHEN OPERATING THE DCHA. FAILURE TO FOLLOW THESE INSTRUCTIONS CAN RESULT IN PERSONAL INJURY OR DEATH.** **WARNING: ALLOW THE DCHA ASSEMBLY TO COOL BEFORE PERFORMING A COMPONENT INSPECTION/REPAIR/REPLACEMENT. FAILURE TO FOLLOW THESE INSTRUCTIONS CAN RESULT IN PERSONAL INJURY OR DEATH.** Turn the ignition off. **NOTE: Check connectors - Clean/repair as necessary.** Disconnect the Cabin Heater Assist C1 harness connector. Turn the ignition on. Measure the voltage between the Cabin Heater Assist Control circuit and ground. Is there any voltage present? Yes → Go To 3 No → Replace the FCM in accordance with the Service Information. Perform CABIN HEATER VERIFICATION TEST - VER 1.	All
3	**WARNING: DO NOT OPERATE THE DCHA IN AN ENCLOSED AREA SUCH AS A GARAGE THAT DOES NOT HAVE EXHAUST VENTILATION FACILITIES. ALWAYS VENT THE DCHA's EXHAUST WHEN OPERATING THE DCHA. FAILURE TO FOLLOW THESE INSTRUCTIONS CAN RESULT IN PERSONAL INJURY OR DEATH.** **WARNING: ALLOW THE DCHA ASSEMBLY TO COOL BEFORE PERFORMING A COMPONENT INSPECTION/REPAIR/REPLACEMENT. FAILURE TO FOLLOW THESE INSTRUCTIONS CAN RESULT IN PERSONAL INJURY OR DEATH.** Turn the ignition off. Disconnect the battery in accordance with the Service information. **NOTE: Check connectors - Clean/repair as necessary.** Disconnect the IPM C3 harness connector. **NOTE: Check connectors - Clean/repair as necessary.** Disconnect the Cabin Heater Assist C1 and C2 harness connectors. Measure the resistance between the Cabin Heater Assist Control circuit and the Fused B(+) circuit. Is the resistance below 10K ohms? Yes → Repair the Cabin Heater Assist Control circuit for a short to the Fused B(+) circuit. Perform CABIN HEATER VERIFICATION TEST - VER 1. No → Go To 4	All

CABIN HEATER CONTROL CIRCUIT SHORT TO BATTERY (ACTIVE) — Continued

TEST	ACTION	APPLICABILITY
4	**WARNING: DO NOT OPERATE THE DCHA IN AN ENCLOSED AREA SUCH AS A GARAGE THAT DOES NOT HAVE EXHAUST VENTILATION FACILITIES. ALWAYS VENT THE DCHA's EXHAUST WHEN OPERATING THE DCHA. FAILURE TO FOLLOW THESE INSTRUCTIONS CAN RESULT IN PERSONAL INJURY OR DEATH.** **WARNING: ALLOW THE DCHA ASSEMBLY TO COOL BEFORE PERFORMING A COMPONENT INSPECTION/REPAIR/REPLACEMENT. FAILURE TO FOLLOW THESE INSTRUCTIONS CAN RESULT IN PERSONAL INJURY OR DEATH.** Turn the ignition off. Disconnect the battery in accordance with the Service Information. Remove the FCM in accordance with the Service Information. Reconnect the IPM C3 harness connector. Reconnect the battery in accordance with the Service Information. Turn the ignition on. **NOTE: Check connectors - Clean/repair as necessary.** Disconnect the Cabin Heater Assist C1 harness connector. Measure the voltage between the Cabin Heater Assist Control circuit and ground. Is there any voltage present? Yes → Repair the Cabin Heater Assist Control circuit for a short to voltage. Perform CABIN HEATER VERIFICATION TEST - VER 1. No → Replace the FCM in accordance with the Service Information. Perform CABIN HEATER VERIFICATION TEST - VER 1.	All

Symptom:

***CABIN HEATER INOPERABLE FROM A/C - HEATER MODULE (MTC)**

POSSIBLE CAUSES
DCHA ACTIVATION CRITERIA NOT MET
NO PCI BUS COMMUNICATION WITH FCM/HVAC MODULE
FCM OR HAVC DTCS PRESENT
FCM FAULT
A/C - HEATER CONTROL MODULE FAULT

TEST	ACTION	APPLICABILITY
1	**WARNING: DO NOT OPERATE THE DCHA IN AN ENCLOSED AREA SUCH AS A GARAGE THAT DOES NOT HAVE EXHAUST VENTILATION FACILITIES. ALWAYS VENT THE DCHA's EXHAUST WHEN OPERATING THE DCHA. FAILURE TO FOLLOW THESE INSTRUCTIONS CAN RESULT IN PERSONAL INJURY OR DEATH.** **CAUTION: DO NOT PERFORM THIS TEST UNLESS DIRECTED HERE BY THE CABIN HEATER PRE-TEST. ALWAYS PERFORM THE CABIN HEATER PRE-TEST PRIOR TO PERFORMING ANY OTHER CABIN HEATER TEST FOR THE RESULT TO BE VALID.** Verify that all of the following criteria was met during the attempt to activate the DCHA from the A/C - Heater Control Module. The engine was running. The engine's coolant temperature was below 66°C (151°F). The vehicle's fuel tank had more than 1/8 of a tank of fuel. The A/C - Heater Control Module's Power switch was on. The Blend Control was set above 90% reheat. Was all criteria met during the attempt to activate the DCHA from the A/C - Heater Control Module? Yes → Go To 2 No → Attempt to activate the DCHA when all of the operating criteria are met. Perform CABIN HEATER VERIFICATION TEST - VER 1.	All
2	**WARNING: DO NOT OPERATE THE DCHA IN AN ENCLOSED AREA SUCH AS A GARAGE THAT DOES NOT HAVE EXHAUST VENTILATION FACILITIES. ALWAYS VENT THE DCHA's EXHAUST WHEN OPERATING THE DCHA. FAILURE TO FOLLOW THESE INSTRUCTIONS CAN RESULT IN PERSONAL INJURY OR DEATH.** Turn the ignition on. With the DRBIII®, attempt to communicate with the FCM and the HVAC Module. Was the DRBIII® able to communicate with the FCM and the HVAC Module? Yes → Go To 3 No → Refer to Communication for the related symptom(s) Perform CABIN HEATER VERIFICATION TEST - VER 1.	All

*CABIN HEATER INOPERABLE FROM A/C - HEATER MODULE (MTC) — Continued

TEST	ACTION	APPLICABILITY
3	**WARNING: DO NOT OPERATE THE DCHA IN AN ENCLOSED AREA SUCH AS A GARAGE THAT DOES NOT HAVE EXHAUST VENTILATION FACILITIES. ALWAYS VENT THE DCHA's EXHAUST WHEN OPERATING THE DCHA. FAILURE TO FOLLOW THESE INSTRUCTIONS CAN RESULT IN PERSONAL INJURY OR DEATH.** Turn the ignition on. With the DRBIII®, check for FCM and HVAC DTCs. Does the DRBIII® display any FCM or HVAC DTCs? Yes → For FCM DTCs, return to the symptom list and choose the symptom(s). Also, refer to Ignition, Power, Accessory category for related symptom(s). For HVAC DTCs, refer to Heater & A/C for related symptom(s). Perform CABIN HEATER VERIFICATION TEST - VER 1. No → Go To 4	All
4	**WARNING: DO NOT OPERATE THE DCHA IN AN ENCLOSED AREA SUCH AS A GARAGE THAT DOES NOT HAVE EXHAUST VENTILATION FACILITIES. ALWAYS VENT THE DCHA's EXHAUST WHEN OPERATING THE DCHA. FAILURE TO FOLLOW THESE INSTRUCTIONS CAN RESULT IN PERSONAL INJURY OR DEATH.** Start the engine. Allow the engine to idle. Turn the A/C - Heater Control Module's Power switch on. Turn the Blower control to the high speed position. **CAUTION: Do not activate the Diesel Cabin Heater Test with the engine off. Failure to follow these instructions can result in internal damage to the DCHA Heater Module.** **NOTE: Do not disconnect the vehicle's battery or the DCHA's main power supply while the DCHA is in operation or in run-down mode. Failure to follow these instructions can result in excess emissions from the DCHA during heater operation.** With the DRBIII® in HVAC, Systems Tests, select Diesel Cabin Heater Test and press #1. With the DRBIII® in HVAC, Systems Tests, Diesel Cabin Heater Test, read the Cabin Heater Status. Does the Status display: On? Yes → Replace the FCM in accordance with the Service Information. Perform CABIN HEATER VERIFICATION TEST - VER 1. No → Replace the A/C - Heater Control Module in accordance with the Service Information. Perform CABIN HEATER VERIFICATION TEST - VER 1.	All

Symptom:

***CABIN HEATER INOPERABLE FROM AUTO TEMP CONTROL (ATC)**

POSSIBLE CAUSES
DCHA ACTIVATION CRITERIA NOT MET
NO PCI BUS COMMUNICATION WITH FCM/ATC
FCM OR ATC DTCS PRESENT
FCM FAULT
AUTO TEMP CONTROL FAULT

TEST	ACTION	APPLICABILITY
1	**WARNING: DO NOT OPERATE THE DCHA IN AN ENCLOSED AREA SUCH AS A GARAGE THAT DOES NOT HAVE EXHAUST VENTILATION FACILITIES. ALWAYS VENT THE DCHA's EXHAUST WHEN OPERATING THE DCHA. FAILURE TO FOLLOW THESE INSTRUCTIONS CAN RESULT IN PERSONAL INJURY OR DEATH.** **CAUTION: DO NOT PERFORM THIS TEST UNLESS DIRECTED HERE BY THE CABIN HEATER PRE-TEST. ALWAYS PERFORM THE CABIN HEATER PRE-TEST PRIOR TO PERFORMING ANY OTHER CABIN HEATER TEST FOR THE RESULT TO BE VALID.** Verify that all of the following criteria was met during the attempt to activate the DCHA from the Auto Temp Control. The VIN indicates that the vehicle has a diesel engine. The vehicle's odometer read more than 5 miles. The engine's speed was above 500 rpm. The engine's coolant temperature was below 66°C (151°F). The vehicle's fuel tank had more than 1/8 of a tank of fuel. The Auto Temp Control's Power switch was on. The Driver temperature control was set above 22°C (72°F). Was all criteria met during the attempt to activate the DCHA from the Auto Temp Control? Yes → Go To 2 No → Attempt to activate the DCHA when all of the operating criteria are met. Perform CABIN HEATER VERIFICATION TEST - VER 1.	All
2	**WARNING: DO NOT OPERATE THE DCHA IN AN ENCLOSED AREA SUCH AS A GARAGE THAT DOES NOT HAVE EXHAUST VENTILATION FACILITIES. ALWAYS VENT THE DCHA's EXHAUST WHEN OPERATING THE DCHA. FAILURE TO FOLLOW THESE INSTRUCTIONS CAN RESULT IN PERSONAL INJURY OR DEATH.** Turn the ignition on. With the DRBIII®, attempt to communicate with the FCM and the ATC. Was the DRBIII® able to communicate with the FCM and the ATC? Yes → Go To 3 No → Refer to Communication for the related symptom(s) Perform CABIN HEATER VERIFICATION TEST - VER 1.	All

*CABIN HEATER INOPERABLE FROM AUTO TEMP CONTROL (ATC) — Continued

TEST	ACTION	APPLICABILITY
3	**WARNING: DO NOT OPERATE THE DCHA IN AN ENCLOSED AREA SUCH AS A GARAGE THAT DOES NOT HAVE EXHAUST VENTILATION FACILITIES. ALWAYS VENT THE DCHA's EXHAUST WHEN OPERATING THE DCHA. FAILURE TO FOLLOW THESE INSTRUCTIONS CAN RESULT IN PERSONAL INJURY OR DEATH.** Turn the ignition on. With the DRBIII®, check for FCM and ATC DTCs. Does the DRBIII® display any FCM or ATC DTCs? Yes → For FCM DTCs, return to the symptom list and choose the symptom(s). Also, refer to Ignition, Power, Accessory category for related symptom(s). For ATC DTCs, refer to Automatic Temperature Control for related symptom(s). Perform CABIN HEATER VERIFICATION TEST - VER 1. No → Go To 4	All

*CABIN HEATER INOPERABLE FROM AUTO TEMP CONTROL (ATC) — Continued

TEST	ACTION	APPLICABILITY
4	**WARNING: DO NOT OPERATE THE DCHA IN AN ENCLOSED AREA SUCH AS A GARAGE THAT DOES NOT HAVE EXHAUST VENTILATION FACILITIES. ALWAYS VENT THE DCHA's EXHAUST WHEN OPERATING THE DCHA. FAILURE TO FOLLOW THESE INSTRUCTIONS CAN RESULT IN PERSONAL INJURY OR DEATH.** **NOTE: The AC Cooldown Test is actuated with the DRBIII®. The test checks A/C system performance based on evaporator temperature sensor input. It also forces the ATC to initiate a Cabin Heater Activation request when the vehicle is equipped with a DCHA.** **NOTE: The A/C related portion of this test will not run if ambient temp is below 12°C (53°F). However, the forced Cabin Heater activation will occur even if the A/C portion of this test fails to initiate because test criteria was not met.** **NOTE: The A/C related portion of this test will pass if evap temp drops 6.7°C (20°F) within 2 minutes of starting this test.** **NOTE: Only A/C related messages display on the DRBIII® after running this test. These messages will clear after paging back out of this test. Therefore, it is important to note all of the test messages before doing so.** **NOTE: Running this test will cause the DELAY & Snowflake VF segments on the ATC to flash for 162 seconds. If the A/C related portion of this test fails, the DELAY & Snowflake VF segmnts will continue to flash until the vehicle is driven more than 3 miles.** Start the engine. Press the ATC's Power switch on. Turn the Front Blower control to the high speed position. **CAUTION: Do not activate the A/C Cooldown Test with the engine off. Failure to follow these instructions can result in internal damage to the DCHA Heater Module.** **NOTE: Do not disconnect the vehicle's battery or the DCHA's main power supply while the DCHA is in operation or in run-down mode. Failure to follow these instructions can result in excess emissions from the DCHA during heater operation.** **NOTE: Before actuating the AC Cooldown Test, verify that the A/C compressor is not running, If the compressor is running, turn the A/C off and allow the evaporator to warm up before proceeding with the test.** **NOTE: The DCHA will operate for approximately 7 minutes. 3 minutes to run and 4 minutes to purge.** With the DRBIII® in ATC, Systems Tests, perform the AC Cooldown Test. Then, select Page Back, Page Back, Monitor Display, and PCI Bus Info ATC. View the ″RG DCHA Req″ monitor. Does the Rg DCHA Req monitor display ON? Yes → Replace the FCM in accordance with the Service Information. Perform CABIN HEATER VERIFICATION TEST - VER 1. No → Replace the Auto Temp Control in accordance with the Service Information. Perform CABIN HEATER VERIFICATION TEST - VER 1.	All

Symptom:

***CHIME INOPERATIVE**

POSSIBLE CAUSES
USE DRB TO ACTUATE CHIME
CHIME DRIVER CIRCUIT - OPEN
CHIME DRIVER CIRCUIT - SHORT TO GROUND
CHIME DRIVER CIRCUIT - SHORT TO VOLTAGE
INSTRUMENT CLUSTER
BCM

TEST	ACTION	APPLICABILITY
1	With the DRBIII®, actuate the CHIME. (BCM actuator) Does chime sound a warning? Yes → The chime operates as it should. Check other reasons for the chime being inoperative and select from the symptom list. Perform BODY VERIFICATION TEST - VER 1. No → Go To 2	All
2	Disconnect the Instrument Cluster harness connector(s). Disconnect the BCM harness connector(s). Using a 12-volt test light connected to 12-volts, check the chime driver circuit for a short to ground. Does the test light illuminate brightly? Yes → Repair the chime driver circuit for a short to ground. Perform BODY VERIFICATION TEST - VER 1. No → Go To 3	All
3	Disconnect the Instrument Cluster harness connector(s). Disconnect the BCM harness connector(s). Using a DVOM connected to ground, check the chime driver circuit for a short to voltage. Is the voltage above 5.0 volts? Yes → Repair the chime driver circuit for a short to voltage. Perform BODY VERIFICATION TEST - VER 1. No → Go To 4	All
4	Reconnect the BCM if disconnected in previous step. Disconnect the Instrument Cluster harness connectors. Using a 12-volt test light connected to 12-volts, check the chime driver circuit at the Instrument Cluster connector. With the DRBIII®, actuate the CHIME. (BCM actuator) Does the test light illuminate ON and OFF? Yes → Replace the Instrument Cluster. Perform BODY VERIFICATION TEST - VER 1. No → Go To 5	All

*CHIME INOPERATIVE — Continued

TEST	ACTION	APPLICABILITY
5	Disconnect the Instrument Cluster harness connectors. Disconnect the BCM harness connector(s). Measure the resistance of the chime driver circuit between the Instrument Cluster connector and the BCM connector. Is the resistance below 5.0 ohms? No → Repair the chime driver circuit for an open, between the Instrument Cluster and the BCM. Perform BODY VERIFICATION TEST - VER 1. Yes → Replace the BCM. Perform BODY VERIFICATION TEST - VER 1.	All

Symptom:

***KEY IN IGNITION AND DRIVER'S DOOR OPEN CHIME NOT OPERATING PROPERLY**

POSSIBLE CAUSES
DRB CHIME ACTUATOR
DRIVER DOOR AJAR STATUS
IGNITION SWITCH
BODY CONTROL MODULE

TEST	ACTION	APPLICABILITY
1	With the DRBIII®, actuate the CHIME. (BCM actuator) Does chime sound a warning? Yes → Go To 2 No → Refer to symptom Chime Inoperative in the Chime category. Perform BODY VERIFICATION TEST - VER 1.	All
2	Open the driver door. With the DRB, in Input/Outputs, read the ″DR DOOR AJAR SW″ state. Does the DRB display ″DR DOOR AJAR SW: CLOSED″? Yes → Go To 3 No → Refer to symptom list for problems related to Door Ajar. Perform BODY VERIFICATION TEST - VER 1.	All
3	With the DRBIII® in BCM Inputs/Outputs, read the Key in Ign Sw state while inserting the key in and out of the ignition switch. Does the DRBIII® display change from open to closed? Yes → Replace and program the Body Control Module in accordance with the Service Information. Perform BODY VERIFICATION TEST - VER 1. No → Check the Ignition Lock Cylinder for damage. If OK replace the Ignition Switch. Perform BODY VERIFICATION TEST - VER 1.	All

Symptom:

***PROBLEM WITH THE VEHICLE SPEED WARNING CHIME**

POSSIBLE CAUSES
INCORRECT COUNTRY CODE PROGRAMMED IN BCM
BODY CONTROL MODULE

TEST	ACTION	APPLICABILITY
1	Note: The high speed warning chime is for Gulf Coast Countries only. With the DRBIII® in Miscellaneous check the Body Control Module country code setting. Is the country code incorrect? Yes → Program the correct country code setting. Perform BODY VERIFICATION TEST - VER 1. No → Replace and program the Body Control Module in accordance with the Service Information. Perform BODY VERIFICATION TEST - VER 1.	All

Symptom:
APM MESSAGES NOT RECEIVED

When Monitored and Set Condition:

APM MESSAGES NOT RECEIVED

When Monitored: With the ignition in run, and the IOD fuse installed.

Set Condition: The BCM does not receive any messages from the module for at least 0.125 seconds.

POSSIBLE CAUSES
ATTEMPT TO COMMUNICATE WITH THE MEMORY SEAT/MIRROR/ADJUSTABLE PEDALS MODULE
BODY CONTROL MODULE

TEST	ACTION	APPLICABILITY
1	Turn the ignition on. With the DRB, attempt to communicate with the Memory Seat/Mirror/Adjustable Pedals Module. Was the DRB able to I/D or communicate with the module? Yes → Go To 2 No → Refer to the Communication category for the related symptom(s). Perform BODY VERIFICATION TEST - VER 1.	All
2	With the DRB, erase DTC's. Cycle the ignition switch from off to on and wait approximately 1 minute. With the DRB, read DTC's. Did this DTC reset? Yes → Replace the Body Control Module in accordance with the service information. Perform BODY VERIFICATION TEST - VER 1. No → Test Complete.	All

Symptom:
ATC MODULE MESSAGES NOT RECEIVED

When Monitored and Set Condition:

ATC MODULE MESSAGES NOT RECEIVED

When Monitored: With the ignition in run, and the IOD fuse installed.

Set Condition: The BCM does not receive any messages from the Automatic Temperature Control (ATC) module for at least 0.125 seconds.

POSSIBLE CAUSES
ATTEMPT TO COMMUNICATE WITH THE AUTOMATIC TEMPERATURE CONTROL MODULE
BODY CONTROL MODULE

TEST	ACTION	APPLICABILITY
1	Turn the ignition on. With the DRB, enter Body then Automatic Temp Control. Was the DRB able to I/D or communicate with the ATC? Yes → Go To 2 No → Refer to the Communication category for the related symptom(s). Perform BODY VERIFICATION TEST - VER 1.	All
2	With the DRB, erase DTC's. Cycle the ignition switch from off to on and wait approximately 1 minute. With the DRB, read DTC's. Did this DTC reset? Yes → Replace the Body Control Module in accordance with the service information. Perform BODY VERIFICATION TEST - VER 1. No → Test Complete.	All

Symptom:
AUDIO MESSAGES NOT RECEIVED

When Monitored and Set Condition:

AUDIO MESSAGES NOT RECEIVED

When Monitored: With the ignition in run, and the IOD fuse installed.

Set Condition: The BCM does not receive any messages from the radio for at least 5 seconds.

POSSIBLE CAUSES
ATTEMPT TO COMMUNICATE WITH THE RADIO
BODY CONTROL MODULE

TEST	ACTION	APPLICABILITY
1	Turn the ignition on. With the DRB, attempt to communicate with the Radio. Was the DRB able to I/D or communicate with the Radio? Yes → Go To 2 No → Refer to the Communication category for the related symptom(s). Perform BODY VERIFICATION TEST - VER 1.	All
2	With the DRB, erase DTC's. Cycle the ignition switch from off to on and wait approximately 1 minute. With the DRB, read DTC's. Did this DTC reset? Yes → Replace the Body Control Module in accordance with the service information. Perform BODY VERIFICATION TEST - VER 1. No → Test Complete.	All

Symptom List:

BCM, PCI BUS SHORTED TO BATTERY
BCM, PCI BUS SHORTED TO GROUND
FCM, PCI BUS SHORTED TO BATTERY
FCM, PCI BUS SHORTED TO GROUND

Test Note: All symptoms listed above are diagnosed using the same tests. The title for the tests will be BCM, PCI BUS SHORTED TO BATTERY.

When Monitored and Set Condition:

BCM, PCI BUS SHORTED TO BATTERY

When Monitored: Continuously

Set Condition: Anytime the BCM detects a short to battery on the PCI Bus circuit.

BCM, PCI BUS SHORTED TO GROUND

When Monitored: Continuously

Set Condition: Anytime the BCM detects a short to ground on the PCI Bus circuit.

FCM, PCI BUS SHORTED TO BATTERY

When Monitored: Continuously

Set Condition: Anytime the FCM detects a short to battery on the PCI Bus circuit.

FCM, PCI BUS SHORTED TO GROUND

When Monitored: Continuously

Set Condition: Anytime the FCM detects a short to ground on the PCI Bus circuit.

POSSIBLE CAUSES
INTERMITTENT CONDITION

BCM, PCI BUS SHORTED TO BATTERY — Continued

TEST	ACTION	APPLICABILITY
1	**NOTE: For this code to be active, the DRB will not be able to communicate with any modules on the vehicle (except the PCM/ECM).** **NOTE: Clear the code. If this code continues to set and the DRB can still communicate with the module, it will be necessary to replace the module.** **WARNING: WHEN THE ENGINE IS OPERATING, DO NOT STAND IN A DIRECT LINE WITH THE FAN. DO NOT PUT YOUR HANDS NEAR THE PULLEYS, BELTS OR FAN. DO NOT WEAR LOOSE CLOTHING.** **NOTE: The conditions that set the DTC are not present at this time. The following list may help in identifying the intermittent condition.** With the engine running at normal operating temperature, wiggle the wiring harnesses. This is to try and duplicate the complete bus failure condition. Refer to any Technical Service Bulletins (TSB) that may apply. Visually inspect the related wiring harness. Look for any chafed, pierced, pinched, or partially broken wires. Visually inspect the related wiring harness connectors. Look for broken, bent, pushed out, or corroded terminals. Were any of the above conditions present? Yes → Repair as necessary. Perform BODY VERIFICATION TEST - VER 1. No → Test Complete.	All

Symptom:

COUNTRY CODE NOT PROGRAMMED

POSSIBLE CAUSES
SELECT CORRECT COUNTRY CODE

TEST	ACTION	APPLICABILITY
1	With the DRB, enter Body Computer, Miscellaneous then Change Country Code. Select the correct country code for the vehicle. With the DRB, erase BCM DTC's. Cycle the ignition switch from off to on and wait approximately 1 minute. With the DRB, read BCM DTC's. Did this DTC reset? Yes → Replace the Body Control Module in accordance with the service information. Perform BODY VERIFICATION TEST - VER 1. No → Test Complete.	All

Symptom:
FCM MESSAGES NOT RECEIVED

When Monitored and Set Condition:

FCM MESSAGES NOT RECEIVED

When Monitored: With the ignition in run, and the IOD fuse installed.

Set Condition: The BCM does not receive any messages from the Front Control Module (FCM) for at least 5 seconds.

POSSIBLE CAUSES
ATTEMPT TO COMMUNICATE WITH THE FRONT CONTROL MODULE
BODY CONTROL MODULE

TEST	ACTION	APPLICABILITY
1	Turn the ignition on. With the DRB, attempt to communicate with the FCM. Was the DRB able to I/D or communicate with the FCM? Yes → Go To 2 No → Refer to the Communication category for the related symptom(s). Perform BODY VERIFICATION TEST - VER 1.	All
2	With the DRB, erase DTC's. Cycle the ignition switch from off to on and wait approximately 1 minute. With the DRB, read DTC's. Did this DTC reset? Yes → Replace the Body Control Module in accordance with the service information. Perform BODY VERIFICATION TEST - VER 1. No → Test Complete.	All

Symptom:
FCM, BCM COMMUNICATION FAULT

When Monitored and Set Condition:

FCM, BCM COMMUNICATION FAULT

When Monitored: With the ignition in run, and the IOD fuse installed.

Set Condition: The FCM does not receive any messages from the Body Control Module (BCM) for at least 5 seconds.

POSSIBLE CAUSES
ATTEMPT TO COMMUNICATE WITH THE BCM
FRONT CONTROL MODULE

TEST	ACTION	APPLICABILITY
1	Turn the ignition on. With the DRB, attempt to communicate with the BCM. Was the DRB able to I/D or communicate with the BCM? Yes → Go To 2 No → Refer to the Communication category for the related symptom(s). Perform BODY VERIFICATION TEST - VER 1.	All
2	With the DRB, erase DTC's. Cycle the ignition switch from off to on and wait approximately 1 minute. With the DRB, read DTC's. Did this DTC reset? Yes → Replace the Front Control Module in accordance with the service information. Perform BODY VERIFICATION TEST - VER 1. No → Test Complete.	All

Symptom:
FCM, HVAC COMMUNICATION FAULT

When Monitored and Set Condition:

FCM, HVAC COMMUNICATION FAULT

When Monitored: With the ignition in run, and the IOD fuse installed.

Set Condition: The FCM does not receive any messages from the Automatic Temperature Control (ATC) module or the A/C Heater Control (MTC) for at least 20 seconds.

POSSIBLE CAUSES
ATTEMPT TO COMMUNICATE WITH THE HVAC
FRONT CONTROL MODULE

TEST	ACTION	APPLICABILITY
1	Turn the ignition on. With the DRB, attempt to communicate with the A/C Heater Control (MTC) or the Automatic Temp Control (ATC). Was the DRB able to I/D or communicate with the HVAC or the ATC? Yes → Go To 2 No → Refer to the Communication category for the related symptom(s). Perform BODY VERIFICATION TEST - VER 1.	All
2	With the DRB, erase DTC's. Cycle the ignition switch from off to on and wait approximately 1 minute. With the DRB, read DTC's. Did this DTC reset? Yes → Replace the Front Control Module in accordance with the service information. Perform BODY VERIFICATION TEST - VER 1. No → Test Complete.	All

Symptom:
FCM, PCI INTERNAL FAULT

When Monitored and Set Condition:

FCM, PCI INTERNAL FAULT

When Monitored: Continuously.

Set Condition: The DTC will set if the FCM detects an internal fault.

POSSIBLE CAUSES
FCM, PCI INTERNAL FAULT

TEST	ACTION	APPLICABILITY
1	Connect the DRB to the Data Link Connector. Turn the ignition on. With the DRB, erase FCM DTC's. Turn the ignition off then turn the ignition on. With the DRB, read FCM DTC's. Did this DTC reset? Yes → Replace the Front Control Module in accordance with the service information. Perform BODY VERIFICATION TEST - VER 1. No → Test Complete.	All

Symptom:
FCM, PCM COMMUNICATION FAULT

When Monitored and Set Condition:

FCM, PCM COMMUNICATION FAULT

When Monitored: With the ignition in run, and the IOD fuse installed.

Set Condition: The FCM does not receive any messages from the PCM for at least 5 seconds.

POSSIBLE CAUSES
PCM COMMUNICATION FAULT
ATTEMPT TO COMMUNICATE WITH THE PCM
PCI BUS CIRCUIT OPEN
POWERTRAIN CONTROL MODULE

TEST	ACTION	APPLICABILITY
1	Turn the ignition on. With the DRB, enter Instrument Cluster, System Tests then PCM Monitor. Does the DRB display: PCM is active on BUS? Yes → Erase the DTC, if DTC resets, replace the Front Control Module in accordance with the service information. Perform BODY VERIFICATION TEST - VER 1. No → Go To 2	All
2	Turn the ignition on. With the DRB, attempt to communicate with the PCM. Was the DRB able to communicate with the PCM? Yes → Go To 3 No → Refer to the communication category and perform the appropriate symptom. Perform BODY VERIFICATION TEST - VER 1.	All

FCM, PCM COMMUNICATION FAULT — Continued

TEST	ACTION	APPLICABILITY
3	Turn the ignition off. Disconnect the PCM harness connector. Note: If equipped with NGC follow the caution below. **CAUTION: DO NOT PROBE THE PCM HARNESS CONNECTORS. PROBING THE PCM HARNESS CONNECTORS WILL DAMAGE THE PCM TERMINALS RESULTING IN POOR TERMINAL TO PIN CONNECTION. INSTALL MILLER SPECIAL TOOL #8815 TO PERFORM DIAGNOSIS.** Measure the resistance of the PCI Bus circuit between the DLC and the PCM connector. Is the resistance below 5.0 ohms? Yes → Replace and program the Powertrain Control Module in accordance with the Service Information. Perform BODY VERIFICATION TEST - VER 1. No → Repair the PCI Bus circuit for an open. Perform BODY VERIFICATION TEST - VER 1.	All

Symptom:
FCM, RADIO COMMUNICATION FAULT

When Monitored and Set Condition:

FCM, RADIO COMMUNICATION FAULT

When Monitored: With the ignition in run, and the IOD fuse installed.

Set Condition: The FCM does not receive any messages from the radio for at least 5 seconds.

POSSIBLE CAUSES
ATTEMPT TO COMMUNICATE WITH THE RADIO
FRONT CONTROL MODULE

TEST	ACTION	APPLICABILITY
1	Turn the ignition on. With the DRB, attempt to communicate with the Radio. Was the DRB able to I/D or communicate with the Radio? Yes → Go To 2 No → Refer to the Communication category for the related symptom(s). Perform BODY VERIFICATION TEST - VER 1.	All
2	With the DRB, erase DTC's. Cycle the ignition switch from off to on and wait approximately 1 minute. With the DRB, read DTC's. Did this DTC reset? Yes → Replace the Front Control Module in accordance with the service information. Perform BODY VERIFICATION TEST - VER 1. No → Test Complete.	All

Symptom:
FCM, TCM COMMUNICATION FAULT

When Monitored and Set Condition:

FCM, TCM COMMUNICATION FAULT

When Monitored: With the ignition in run, and the IOD fuse installed.

Set Condition: The FCM does not receive any messages from the Transmission Control Module (TCM) for at least 5 seconds.

POSSIBLE CAUSES
ATTEMPT TO COMMUNICATE WITH THE TCM
FRONT CONTROL MODULE

TEST	ACTION	APPLICABILITY
1	Turn the ignition on. With the DRB, attempt to communicate with the TCM. Was the DRB able to I/D or communicate with the TCM? Yes → Go To 2 No → Refer to the Communication category for the related symptom(s). Perform BODY VERIFICATION TEST - VER 1.	All
2	With the DRB, erase DTC's. Cycle the ignition switch from off to on and wait approximately 1 minute. With the DRB, read DTC's. Did this DTC reset? Yes → Replace the Front Control Module in accordance with the service information. Perform BODY VERIFICATION TEST - VER 1. No → Test Complete.	All

Symptom:
INTERNAL BCM FAILURE

When Monitored and Set Condition:

INTERNAL BCM FAILURE

When Monitored: The BCM detects an internal fault for 10 seconds.

Set Condition: The DTC will set if the BCM detects an internal fault.

POSSIBLE CAUSES
INTERNAL BCM FAILURE

TEST	ACTION	APPLICABILITY
1	Connect the DRB to the Data Link Connector. Turn the ignition on. With the DRB, erase BCM DTC's. Turn the ignition off then turn the ignition on. With the DRB, read BCM DTC's. Did this DTC reset? Yes → Replace the Body Control Module in accordance with the service information. Perform BODY VERIFICATION TEST - VER 1. No → Test Complete.	All

Symptom:
LEFT PSD MESSAGES NOT RECEIVED

When Monitored and Set Condition:

LEFT PSD MESSAGES NOT RECEIVED

When Monitored: When the Body Control Module is awake.

Set Condition: The BCM does not sense a response from the Left Power Sliding Door Module.

POSSIBLE CAUSES
CHECK FOR DTCS
VERIFY DTC
ATTEMPT TO COMMUNICATE WITH THE LEFT SLIDING DOOR CONTROL MODULE
BODY CONTROL MODULE

TEST	ACTION	APPLICABILITY
1	Turn the ignition on. With the DRBIII®, read BCM DTC's. Are any IOD Wakeup power sliding door DTC's set? Yes → Refer to symptom list for problems related to the IOD wakeup circuit. Perform BODY VERIFICATION TEST - VER 1. No → Go To 2	All
2	Turn the ignition on. With the DRBIII®, erase DTC's. Operate the left power sliding door with either the key fob or the overhead console. With the DRBIII®, read BCM DTC's. Did this DTC reset? Yes → Go To 3 No → The condition that caused this DTC is currently not present. Use the wiring diagrams/schematic as a guide, and inspect the related wiring harness for a possible intermittent. Perform BODY VERIFICATION TEST - VER 1.	All
3	Turn the ignition on. With the DRB, attempt to communicate with the Left Sliding Door Control Module. Was the DRB able to I/D or communicate with the Left Sliding Door Control Module? Yes → Go To 4 No → Refer to the Communication category for the related symptom(s). Perform BODY VERIFICATION TEST - VER 1.	All

LEFT PSD MESSAGES NOT RECEIVED — Continued

TEST	ACTION	APPLICABILITY
4	With the DRB, erase DTC's. Cycle the ignition switch from off to on and wait approximately 1 minute. Operate the left power sliding door with either the key fob or the overhead console. With the DRB, read DTC's. Did this DTC reset? Yes → Replace the Body Control Module in accordance with the service information. Perform BODY VERIFICATION TEST - VER 1. No → Test Complete.	All

Symptom:
LIFTGATE MODULE MESSAGES NOT RECEIVED

When Monitored and Set Condition:

LIFTGATE MODULE MESSAGES NOT RECEIVED

When Monitored: When the Body Control Module is awake.

Set Condition: The BCM does not sense a response from the Power Liftgate Control Module.

POSSIBLE CAUSES
CHECK FOR DTCS
VERIFY DTC
ATTEMPT TO COMMUNICATE WITH THE POWER LIFTGATE MODULE
BODY CONTROL MODULE

TEST	ACTION	APPLICABILITY
1	Turn the ignition on. With the DRBIII®, read BCM DTC's. Are any IOD Wakeup power liftgate DTC's set? Yes → Refer to symptom list for problems related to the IOD wakeup circuit. Perform BODY VERIFICATION TEST - VER 1. No → Go To 2	All
2	Turn the ignition on. With the DRBIII®, erase DTC's. Operate the liftgate with either the key fob or the overhead console. With the DRBIII®, read BCM DTC's. Did this DTC reset? Yes → Go To 3 No → The condition that caused this DTC is currently not present. Use the wiring diagrams/schematic as a guide, and inspect the related wiring harness for a possible intermittent. Perform BODY VERIFICATION TEST - VER 1.	All
3	Turn the ignition on. With the DRB, attempt to communicate with the Power Liftgate Module. Was the DRB able to I/D or communicate with the Power Liftgate Module? Yes → Go To 4 No → Refer to the Communication category for the related symptom(s). Perform BODY VERIFICATION TEST - VER 1.	All

LIFTGATE MODULE MESSAGES NOT RECEIVED — Continued

TEST	ACTION	APPLICABILITY
4	With the DRB, erase DTC's. Cycle the ignition switch from off to on and wait approximately 1 minute. Operate the liftgate with either the key fob or the overhead console. With the DRB, read DTC's. Did this DTC reset? Yes → Replace the Body Control Module in accordance with the service information. Perform BODY VERIFICATION TEST - VER 1. No → Test Complete.	All

Symptom:
MIC MESSAGES NOT RECEIVED

When Monitored and Set Condition:

MIC MESSAGES NOT RECEIVED

When Monitored: With the ignition in run, and the IOD fuse installed.

Set Condition: The BCM does not receive any messages from the Instrument Cluster (MIC) for at least 5 seconds.

POSSIBLE CAUSES
CHECK FOR DTCS
VERIFY DTC
ATTEMPT TO COMMUNICATE WITH THE MIC
BODY CONTROL MODULE

TEST	ACTION	APPLICABILITY
1	Turn the ignition on. With the DRBIII®, read BCM DTC's. Are any IOD Wakeup Cluster DTC's set? Yes → Refer to symptom list for problems related to the IOD wakeup circuit. Perform BODY VERIFICATION TEST - VER 1. No → Go To 2	All
2	Turn the ignition on. With the DRBIII®, erase DTC's. With the DRBIII®, read BCM DTC's. Did this DTC reset? Yes → Go To 3 No → The condition that caused this DTC is currently not present. Use the wiring diagrams/schematic as a guide, and inspect the related wiring harness for a possible intermittent. Perform BODY VERIFICATION TEST - VER 1.	All
3	Turn the ignition on. With the DRBIII®, attempt to communicate with the Instrument Cluster (MIC). Was the DRBIII® able to I/D or communicate with the Instrument Cluster (MIC)? Yes → Go To 4 No → Refer to the Communication category for the related symptom(s). Perform BODY VERIFICATION TEST - VER 1.	All

MIC MESSAGES NOT RECEIVED — Continued

TEST	ACTION	APPLICABILITY
4	With the DRBIII®, erase DTC's. Cycle the ignition switch from off to on and wait approximately 1 minute. With the DRBIII®, read DTC's. Did this DTC reset? Yes → Replace the Body Control Module in accordance with the service information. Perform BODY VERIFICATION TEST - VER 1. No → Test Complete.	All

Symptom:
MSM MESSAGES NOT RECEIVED

When Monitored and Set Condition:

MSM MESSAGES NOT RECEIVED

When Monitored: With the ignition in run, and the IOD fuse installed.

Set Condition: The BCM does not receive any messages from the memory module for at least 0.125 seconds.

POSSIBLE CAUSES
ATTEMPT TO COMMUNICATE WITH THE MEMORY MODULE
BODY CONTROL MODULE

TEST	ACTION	APPLICABILITY
1	Turn the ignition on. With the DRB, attempt to communicate with the memory module. Was the DRB able to I/D or communicate with the memory module? Yes → Go To 2 No → Refer to the Communication category for the related symptom(s). Perform BODY VERIFICATION TEST - VER 1.	All
2	With the DRB, erase DTC's. Cycle the ignition switch from off to on and wait approximately 1 minute. With the DRB, read DTC's. Did this DTC reset? Yes → Replace the Body Control Module in accordance with the service information. Perform BODY VERIFICATION TEST - VER 1. No → Test Complete.	All

Symptom:
ORC MESSAGES NOT RECEIVED

When Monitored and Set Condition:

ORC MESSAGES NOT RECEIVED

When Monitored: With the ignition in run, and the IOD fuse installed.

Set Condition: The BCM does not receive any messages from the Occupant Restraint Controller (ORC) for at least 5 seconds.

POSSIBLE CAUSES
ATTEMPT TO COMMUNICATE WITH THE OCCUPANT RESTRAINT CONTROLLER
BODY CONTROL MODULE

TEST	ACTION	APPLICABILITY
1	Turn the ignition on. With the DRB, attempt to communicate with the ORC. Was the DRB able to I/D or communicate with the ORC? Yes → Go To 2 No → Refer to the Communication category for the related symptom(s). Perform BODY VERIFICATION TEST - VER 1.	All
2	With the DRB, erase DTC's. Cycle the ignition switch from off to on and wait approximately 1 minute. With the DRB, read DTC's. Did this DTC reset? Yes → Replace the Body Control Module in accordance with the service information. Perform BODY VERIFICATION TEST - VER 1. No → Test Complete.	All

Symptom:
OTIS MODULE MESSAGE MISMATCH

When Monitored and Set Condition:

OTIS MODULE MESSAGE MISMATCH

When Monitored: With the ignition on.

Set Condition:

POSSIBLE CAUSES
INTERMITTENT CONDITION
OTIS COMMUNICATION
OTIS MODULE
BODY CONTROL MODULE

TEST	ACTION	APPLICABILITY
1	**NOTE: All communication DTC(s) that may have set along with this DTC must be diagnosed before continuing.** With the DRBIII®, erase the DTC. Cycle the ignition on and off several times, leaving the ignition on for at least 15 seconds. With the DRBIII®, read DTCs. Did this DTC reset? Yes → Go To 2 No → Go To 4	All
2	Turn the ignition on. With the DRBIII®, attempt to communicate with the overhead console. Can communication be established with the module? Yes → Go To 3 No → Refer to the Communication Category and perform the appropriate symptom. Perform BODY VERIFICATION TEST - VER 1.	All

OTIS MODULE MESSAGE MISMATCH — Continued

TEST	ACTION	APPLICABILITY
3	Turn the ignition off. Install a substitute overhead console in place of the original module. With the DRBIII®, erase DTCs. Turn the ignition on. Cycle the ignition on and off, leaving the ignition in the on position for at least 15 seconds each time. With the DRBIII®, read DTCs. Did this DTC reset? Yes → Replace the Body Control Module in accordance with the service information. Perform BODY VERIFICATION TEST - VER 1. No → Replace the overhead console in accordance with the service information. Perform BODY VERIFICATION TEST - VER 1.	All
4	**NOTE: The conditions that set the DTC are not present at this time. The following list may help in identifying the intermittent condition.** With the engine running at normal operating temperature, monitor the DRB parameters related to the DTC while wiggling the wiring harness. Look for parameter values to change and/or a DTC to set. Refer to any Technical Service Bulletins (TSB) that may apply. Visually inspect the related wiring harness. Look for any chafed, pierced, pinched, or partially broken wires. Visually inspect the related wiring harness connectors. Look for broken, bent, pushed out, or corroded terminals. Were any of the above conditions present? Yes → Repair as necessary. Perform BODY VERIFICATION TEST - VER 1. No → Test Complete.	All

Symptom:
OTIS MODULE MESSAGES NOT RECEIVED

When Monitored and Set Condition:

OTIS MODULE MESSAGES NOT RECEIVED

When Monitored: With the ignition in run, and the IOD fuse installed.

Set Condition: The BCM does not receive any messages from the overhead console for at least 5 seconds.

POSSIBLE CAUSES
ATTEMPT TO COMMUNICATE WITH THE OTIS
BODY CONTROL MODULE

TEST	ACTION	APPLICABILITY
1	Turn the ignition on. With the DRB, attempt to communicate with the overhead console. Was the DRB able to I/D or communicate with the overhead console? Yes → Go To 2 No → Refer to the Communication category for the related symptom(s). Perform BODY VERIFICATION TEST - VER 1.	All
2	With the DRB, erase DTC's. Cycle the ignition switch from off to on and wait approximately 1 minute. With the DRB, read DTC's. Did this DTC reset? Yes → Replace the Body Control Module in accordance with the service information. Perform BODY VERIFICATION TEST - VER 1. No → Test Complete.	All

Symptom:
PCI INTERNAL HARDWARE FAILURE

POSSIBLE CAUSES
PCI INTERNAL HARDWARE FAILURE

TEST	ACTION	APPLICABILITY
1	Connect the DRB to the Data Link Connector. Turn the ignition on. With the DRB, erase BCM DTC's. Turn the ignition off then turn the ignition on. With the DRB, read BCM DTC's. Did this DTC reset? Yes → Replace the Body Control Module in accordance with the service information. Perform BODY VERIFICATION TEST - VER 1. No → Test Complete.	All

Symptom:
PCM MESSAGES NOT RECEIVED

When Monitored and Set Condition:

PCM MESSAGES NOT RECEIVED

When Monitored: With the ignition in run, and the IOD fuse installed.

Set Condition: The BCM does not receive any messages from the PCM for at least 5 seconds.

POSSIBLE CAUSES
PCM MESSAGE NOT RECEIVED
ATTEMPT TO COMMUNICATE WITH THE PCM
PCI BUS CIRCUIT OPEN
POWERTRAIN CONTROL MODULE

TEST	ACTION	APPLICABILITY
1	Turn the ignition on. With the DRBIII®, enter Instrument Cluster, System Tests then PCM Monitor. Does the DRBIII® display: PCM is active on BUS? Yes → Erase the DTC, if DTC resets, replace the Body Control Module in accordance with the service information. Perform BODY VERIFICATION TEST - VER 1. No → Go To 2	All
2	Turn the ignition on. With the DRBIII®, attempt to communicate with the PCM. Was the DRBIII® able to communicate with the PCM? Yes → Go To 3 No → Refer to the communication category and perform the appropriate symptom. Perform BODY VERIFICATION TEST - VER 1.	All

PCM MESSAGES NOT RECEIVED — Continued

TEST	ACTION	APPLICABILITY
3	Turn the ignition off. Disconnect the PCM harness connector. Note: If equipped with NGC follow the caution below. **CAUTION: DO NOT PROBE THE PCM HARNESS CONNECTORS. PROBING THE PCM HARNESS CONNECTORS WILL DAMAGE THE PCM TERMINALS RESULTING IN POOR TERMINAL TO PIN CONNECTION. INSTALL MILLER SPECIAL TOOL #8815 TO PERFORM DIAGNOSIS.** Measure the resistance of the PCI Bus circuit between the DLC and the PCM connector. Is the resistance below 5.0 ohms? Yes → Replace and program the Powertrain Control Module in accordance with the Service Information. Perform BODY VERIFICATION TEST - VER 1. No → Repair the PCI Bus circuit for an open. Perform BODY VERIFICATION TEST - VER 1.	All

Symptom:
RADIO MEM MSG NOT RECEIVED

When Monitored and Set Condition:

RADIO MEM MSG NOT RECEIVED

When Monitored: With the ignition in run, and the IOD fuse installed.

Set Condition: The BCM does not receive any radio memory messages.

POSSIBLE CAUSES
ATTEMPT TO COMMUNICATE WITH THE RADIO
CHECK THE MEMORY SYSTEM
BODY CONTROL MODULE

TEST	ACTION	APPLICABILITY
1	Turn the ignition on. With the DRB, attempt to communicate with the Radio. Was the DRB able to I/D or communicate with the Radio? Yes → Go To 2 No → Refer to the Communication category for the related symptom(s). Perform BODY VERIFICATION TEST - VER 1.	All
2	Turn the ignition on. Operate the memory seat system. Did the memory seat system operate properly? Yes → Go To 3 No → Refer to the Memory Seat category and perform the appropriate symptom. Perform BODY VERIFICATION TEST - VER 1.	All
3	With the DRB, erase DTC's. Cycle the ignition switch from off to on and wait approximately 1 minute. With the DRB, read DTC's. Did this DTC reset? Yes → Replace the Body Control Module in accordance with the service information. Perform BODY VERIFICATION TEST - VER 1. No → Test Complete.	All

Symptom:

RIGHT PSD MESSAGES NOT RECEIVED

When Monitored and Set Condition:

RIGHT PSD MESSAGES NOT RECEIVED

When Monitored: When the Body Control Module is awake.

Set Condition: The BCM does not sense a response from the Right Power Sliding Door Module.

POSSIBLE CAUSES
CHECK FOR DTCS
VERIFY DTC
ATTEMPT TO COMMUNICATE WITH THE RIGHT SLIDING DOOR CONTROL MODULE
BODY CONTROL MODULE

TEST	ACTION	APPLICABILITY
1	Turn the ignition on. With the DRBIII®, read BCM DTC's. Are any IOD Wakeup power sliding door DTC's set? Yes → Refer to symptom list for problems related to the IOD wakeup circuit. Perform BODY VERIFICATION TEST - VER 1. No → Go To 2	All
2	Turn the ignition on. With the DRBIII®, erase DTC's. Operate the right power sliding door with either the key fob or the overhead console. With the DRBIII®, read BCM DTC's. Did this DTC reset? Yes → Go To 3 No → The condition that caused this DTC is currently not present. Use the wiring diagrams/schematic as a guide, and inspect the related wiring harness for a possible intermittent. Perform BODY VERIFICATION TEST - VER 1.	All
3	Turn the ignition on. With the DRB, attempt to communicate with the Right Sliding Door Control Module. Was the DRB able to I/D or communicate with the Right Sliding Door Control Module? Yes → Go To 4 No → Refer to the Communication category for the related symptom(s). Perform BODY VERIFICATION TEST - VER 1.	All

RIGHT PSD MESSAGES NOT RECEIVED — Continued

TEST	ACTION	APPLICABILITY
4	With the DRB, erase DTC's. Cycle the ignition switch from off to on and wait approximately 1 minute. Operate the right power sliding door with either the key fob or the overhead console. With the DRB, read DTC's. Did this DTC reset? Yes → Replace the Body Control Module in accordance with the service information. Perform BODY VERIFICATION TEST - VER 1. No → Test Complete.	All

Symptom:
SKIM (SKREEM) MESSAGES NOT RECEIVED

When Monitored and Set Condition:

SKIM (SKREEM) MESSAGES NOT RECEIVED

When Monitored: With the ignition in run, and the IOD fuse installed.

Set Condition: The BCM does not receive any messages from the Sentry Key Remote Entry Module (SKREEM) for at least 5 seconds.

POSSIBLE CAUSES
ATTEMPT TO COMMUNICATE WITH THE SENTRY KEY REMOTE ENTRY MODULE
BODY CONTROL MODULE

TEST	ACTION	APPLICABILITY
1	Turn the ignition on. With the DRB, attempt to communicate with the SKREEM. Was the DRB able to I/D or communicate with the SKREEM? Yes → Go To 2 No → Refer to the Communication category for the related symptom(s). Perform BODY VERIFICATION TEST - VER 1.	All
2	With the DRB, erase DTC's. Cycle the ignition switch from off to on and wait approximately 1 minute. With the DRB, read DTC's. Did this DTC reset? Yes → Replace the Body Control Module in accordance with the service information. Perform BODY VERIFICATION TEST - VER 1. No → Test Complete.	All

Symptom:
TCM MESSAGES NOT RECEIVED

When Monitored and Set Condition:

TCM MESSAGES NOT RECEIVED

When Monitored: With the ignition in run, and the IOD fuse installed.

Set Condition: The BCM does not receive any messages from the Transmission Control Module (TCM) for at least 5 seconds.

POSSIBLE CAUSES
ATTEMPT TO COMMUNICATE WITH THE TCM
BODY CONTROL MODULE

TEST	ACTION	APPLICABILITY
1	Turn the ignition on. With the DRBIII®, attempt to communicate with the Transmission Control Module. Was the DRBIII® able to I/D or communicate with the TCM? Yes → Go To 2 No → Refer to the Communication category for the related symptom(s). Perform BODY VERIFICATION TEST - VER 1.	All
2	With the DRBIII®, erase DTC's. Cycle the ignition switch from off to on and wait approximately 1 minute. With the DRBIII®, read DTC's. Did this DTC reset? Yes → Replace the Body Control Module in accordance with the service information. Perform BODY VERIFICATION TEST - VER 1. No → Test Complete.	All

Symptom:

***NO RESPONSE FROM AMPLIFIER**

POSSIBLE CAUSES
FUSED ACCESSORY RELAY OUTPUT CIRCUIT OPEN
FUSED B(+) CKT OPEN
OPEN GROUND CIRCUIT
OPEN PCI BUS CIRCUIT
AMPLIFIER

TEST	ACTION	APPLICABILITY
1	Turn the ignition off. Disconnect the Amplifier C2 harness connector. Using a 12-volt test light connected to ground, probe each Fused B+ circuit. Is the test light illuminated for each circuit? Yes → Go To 2 No → Repair the Fused B+ circuit for an open or short. Refer to the wiring diagrams in the service information. Perform BODY VERIFICATION TEST - VER 1.	All
2	Turn the ignition off. Disconnect the Amplifier C2 harness connector. Using a 12-volt test light connected to 12-volts, probe each ground circuit. Is the test light illuminated for each circuit? Yes → Go To 3 No → Repair the Ground circuit for an open. Perform BODY VERIFICATION TEST - VER 1.	All
3	Turn the ignition off. Disconnect the Amplifier C2 harness connector. Turn the ignition on. Using a 12-volt test light connected to ground, probe Fused Accessory Relay Output circuit. Is the test light illuminated? Yes → Go To 4 No → Repair the Fused Accessory Relay Output circuit for an open or short. Refer to the wiring diagrams in the service information. Perform BODY VERIFICATION TEST - VER 1.	All

*NO RESPONSE FROM AMPLIFIER — Continued

TEST	ACTION	APPLICABILITY
4	**Note: Ensure there is PCI Bus communication with other modules on the vehicle before proceeding. If not, refer to the symptom list from the menu and repair as necessary.** Disconnect the Amplifier C2 harness connector. Use Scope input cable CH7058, Cable to Probe adapter CH7062, and the red and black test probes. Connect the scope input cable to the channel one connector on the DRB. Attach the red and black leads and the cable to probe adapter to the scope input cable. With the DRBIII® select Pep Module Tools. Select lab scope. Select Live Data. Select 12 volt square wave. Press F2 for Scope. Press F2 and use the down arrow to set voltage range to 20 volts. Press F2 again when complete. Connect the Black lead to the chassis ground. Connect the Red lead to the PCI Bus circuit in the Amplifier connector. Turn the ignition on. Observe the voltage display on the DRB Lab Scope. Does the voltage pulse from 0 to approximately 7.5 volts? Yes → Replace the Amplifier in accordance with the service information. Perform BODY VERIFICATION TEST - VER 1. No → Repair the PCI Bus circuit for an open. Perform BODY VERIFICATION TEST - VER 1.	All

Symptom:

***NO RESPONSE FROM AUTOMATIC TEMPERATURE CONTROL MODULE**

POSSIBLE CAUSES
ATTEMPT TO COMMUNICATE WITH THE BCM
GROUND CIRCUIT OPEN
FUSED (B+) CKT OPEN
FUSED IGNITION SWITCH OUTPUT CIRCUIT OPEN
OPEN PCI BUS CIRCUIT
AUTOMATIC TEMPERATURE CONTROL MODULE

TEST	ACTION	APPLICABILITY
1	Turn the ignition on. With the DRB, enter Body then Body Computer. Was the DRB able to I/D or communicate with the BCM? Yes → Go To 2 No → Refer to the symptom list for problems related to no communication with the BCM. Perform BODY VERIFICATION TEST - VER 1.	All
2	Turn the ignition off. Disconnect the ATC C2 harness connector. Using a 12-volt test light connected to 12-volts, probe the Ground circuit. Is the test light illuminated? Yes → Go To 3 No → Repair the Ground circuit for an open. Perform BODY VERIFICATION TEST - VER 1.	All
3	Turn the ignition off. Disconnect the ATC C2 harness connector. Using a 12-volt test light connected to ground, probe the Fused B+ circuit. Is the test light illuminated? Yes → Go To 4 No → Repair the Fused B+ circuit for an open or short. Refer to the wiring diagrams in the service information. Perform BODY VERIFICATION TEST - VER 1.	All
4	Turn the ignition off. Disconnect the ATC C2 harness connector. Turn the ignition on. Using a 12-volt test light connected to ground, probe the Fused Ignition Switch Output circuit. Is the test light illuminated? Yes → Go To 5 No → Repair the Fused Ignition Switch Output circuit for an open or short. Refer to the wiring diagrams in the service information. Perform BODY VERIFICATION TEST - VER 1.	All

*NO RESPONSE FROM AUTOMATIC TEMPERATURE CONTROL MODULE — Continued

TEST	ACTION	APPLICABILITY
5	**Note: Ensure there is PCI Bus communication with other modules on the vehicle before proceeding. If not, refer to the symptom list from the menu and repair as necessary.** Disconnect the ATC C2 harness connector. Use Scope input cable CH7058, Cable to Probe adapter CH7062, and the red and black test probes. Connect the scope input cable to the channel one connector on the DRB. Attach the red and black leads and the cable to probe adapter to the scope input cable. With the DRBIII® select Pep Module Tools. Select lab scope. Select Live Data. Select 12 volt square wave. Press F2 for Scope. Press F2 and use the down arrow to set voltage range to 20 volts. Press F2 again when complete. Connect the Black lead to the chassis ground. Connect the Red lead to the PCI Bus circuit in the ATC connector. Turn the ignition on. Observe the voltage display on the DRB Lab Scope. Does the voltage pulse from 0 to approximately 7.5 volts? Yes → Go To 6 No → Repair the PCI Bus circuit for an open. Perform BODY VERIFICATION TEST - VER 1.	All
6	If there are no possible causes remaining, view repair. Repair Replace the Automatic Temperature Control Module in accordance with the service information. Perform BODY VERIFICATION TEST - VER 1.	All

Symptom:

***NO RESPONSE FROM BODY CONTROL MODULE**

POSSIBLE CAUSES
ATTEMPT TO COMMUNICATE WITH ANOTHER MODULE
FUSED (B+) CKT OPEN
OPEN GROUND CIRCUIT(S)
OPEN PCI BUS CIRCUIT
BODY CONTROL MODULE

TEST	ACTION	APPLICABILITY
1	Turn the ignition on. With the DRB, attempt to communicate with the Occupant Restraint Controller (ORC). With the DRB, attempt to communicate with the Instrument Cluster. Was the DRB able to I/D or communicate with the ORC and the MIC? Yes → Go To 2 No → Refer to symptom list for problems related to the PCI Bus Communication Failure. Perform BODY VERIFICATION TEST - VER 1.	All
2	Turn the ignition off. Disconnect the BCM C2 harness connector. Using a 12-volt test light connected to ground, probe the Fused B+ circuit. Is the test light illuminated? Yes → Go To 3 No → Check fuse #14 in the IPM for an open. If ok, repair the Fused B+ circuit for an open or short. Refer to the wiring diagrams in the service information. Perform BODY VERIFICATION TEST - VER 1.	All
3	Turn the ignition off. Disconnect the BCM C2 harness connector. Using a 12-volt test light connected to 12-volts, probe both Ground circuits. Is the test light illuminated for each circuit? Yes → Go To 4 No → Repair the Ground circuit(s) for an open. Perform BODY VERIFICATION TEST - VER 1.	All

*NO RESPONSE FROM BODY CONTROL MODULE — Continued

TEST	ACTION	APPLICABILITY
4	**Note: Ensure there is PCI Bus communication with other modules on the vehicle before proceeding. If not, refer to the symptom list from the menu and repair as necessary.** Disconnect the BCM C3 harness connector. Use Scope input cable CH7058, Cable to Probe adapter CH7062, and the red and black test probes. Connect the scope input cable to the channel one connector on the DRB. Attach the red and black leads and the cable to probe adapter to the scope input cable. With the DRBIII® select Pep Module Tools. Select lab scope. Select Live Data. Select 12 volt square wave. Press F2 for Scope. Press F2 and use the down arrow to set voltage range to 20 volts. Press F2 again when complete. Connect the Black lead to the chassis ground. Connect the Red lead to the PCI Bus circuit in the BCM connector. Turn the ignition on. Observe the voltage display on the DRB Lab Scope. Does the voltage pulse from 0 to approximately 7.5 volts? Yes → Go To 5 No → Repair the PCI Bus circuit for an open. Perform BODY VERIFICATION TEST - VER 1.	All
5	If there are no possible causes remaining, view repair. Repair Replace the Body Control Module in accordance with the service information. Perform BODY VERIFICATION TEST - VER 1.	All

Symptom:

***NO RESPONSE FROM CABIN HEATER ASSIST - DIESEL ONLY**

POSSIBLE CAUSES
ATTEMPT TO COMMUNICATE WITH THE ECM
FUSED B+ CIRCUIT OPEN
GROUND CIRCUIT OPEN
SCI TRANSMIT CIRCUIT OPEN
CABIN HEATER ASSIST

TEST	ACTION	APPLICABILITY
1	Turn the ignition on. With the DRB, attempt to communicate with the ECM. Was the DRB able to I/D or communicate with the ECM? Yes → Go To 2 No → Refer to the symptom list for problems related to no communication with the ECM. Perform CABIN HEATER VERIFICATION TEST - VER 1.	All
2	Turn the ignition off. Disconnect the Cabin Heater Assist C2 harness connector. Using a 12-volt test light connected to ground, probe the Fused B+ circuit. Is the test light illuminated? Yes → Go To 3 No → Check the IPM Fuse #15 for an open. If open, check for a short to ground on the Fused B+ circuit. If not open, repair the Fused B+ circuit for an open. Perform CABIN HEATER VERIFICATION TEST - VER 1.	All
3	Turn the ignition off. Disconnect the Cabin Heater Assist C2 harness connector. Using a 12-volt test light connected to 12-volts, probe the ground circuit. Is the test light illuminated? Yes → Go To 4 No → Repair the ground circuit for an open. Perform CABIN HEATER VERIFICATION TEST - VER 1.	All
4	Turn the ignition off. Disconnect the Cabin Heater Assist C1 harness connector. Disconnect the DRB from the DLC. Measure the resistance of the SCI Transmit circuit between the Cabin Heater Assist connector and the DLC. Is the resistance below 5.0 ohms? Yes → Go To 5 No → Repair the SCI Transmit circuit for an open. Perform CABIN HEATER VERIFICATION TEST - VER 1.	All

*NO RESPONSE FROM CABIN HEATER ASSIST - DIESEL ONLY — Continued

TEST	ACTION	APPLICABILITY
5	If there are no possible causes remaining, view repair. Repair Replace the Cabin Heater Assist in accordance with the service information. Perform CABIN HEATER VERIFICATION TEST - VER 1.	All

Symptom:

*NO RESPONSE FROM CONTROLLER ANTILOCK BRAKE

POSSIBLE CAUSES
NO RESPONSE FROM CAB
GROUND CIRCUIT OPEN
OPEN FUSED IGNITION SWITCH OUTPUT CIRCUIT
OPEN PCI BUS CIRCUIT
CONTROLLER ANTILOCK BRAKE

TEST	ACTION	APPLICABILITY
1	Turn the ignition on. **Note: As soon as one or more module communicates with the DRB, answer the question.** With the DRB, attempt to communicate with the Occupant Restraint Controller (ORC). With the DRB, attempt to communicate with the Body Control Module (BCM). Was the DRB able to I/D or establish communications with either of the modules? Yes → Go To 2 No → Refer to the Communications category and perform the symptom PCI Bus Communication Failure. Perform ABS VERIFICATION TEST - VER 1.	All
2	Turn the ignition off. Disconnect the CAB harness connector. Using a 12-volt test light connected to 12-volts, probe both ground circuits. Is the test light illuminated for each circuit? Yes → Go To 3 No → Repair the ground circuit(s) for an open. Perform ABS VERIFICATION TEST - VER 1.	All
3	Turn the ignition off. Disconnect the CAB harness connector. Turn the ignition on. Using a 12-volt test light connected to ground, probe the Fused Ignition Switch Output circuit. Is the test light illuminated? Yes → Go To 4 No → Repair the Fused Ignition Switch Output circuit for an open. Perform ABS VERIFICATION TEST - VER 1.	All

*NO RESPONSE FROM CONTROLLER ANTILOCK BRAKE — Continued

TEST	ACTION	APPLICABILITY
4	**Note: Ensure there is PCI Bus communication with other modules on the vehicle before proceeding. If not, refer to the symptom list from the menu and repair as necessary.** Disconnect the CAB harness connector. Use Scope input cable CH7058, Cable to Probe adapter CH7062, and the red and black test probes. Connect the scope input cable to the channel one connector on the DRB. Attach the red and black leads and the cable to probe adapter to the scope input cable. With the DRBIII® select Pep Module Tools. Select lab scope. Select Live Data. Select 12 volt square wave. Press F2 for Scope. Press F2 and use the down arrow to set voltage range to 20 volts. Press F2 again when complete. Connect the Black lead to the chassis ground. Connect the Red lead to the PCI Bus circuit in the CAB connector. Turn the ignition on. Observe the voltage display on the DRB Lab Scope. Does the voltage pulse from 0 to approximately 7.5 volts? Yes → Go To 5 No → Repair the PCI Bus circuit for an open. Perform ABS VERIFICATION TEST - VER 1.	All
5	If there are no possible causes remaining, view repair. Repair Replace the Controller Antilock Brake in accordance with the Service Information. Perform ABS VERIFICATION TEST - VER 1.	All

Symptom:

*NO RESPONSE FROM ECM (PCI BUS) - DIESEL ONLY

POSSIBLE CAUSES
ECM PCI NO RESPONSE
PCI BUS CIRCUIT OPEN
ENGINE CONTROL MODULE

TEST	ACTION	APPLICABILITY
1	Turn the ignition on. **NOTE: As soon as one or more module communicates with the DRB, answer the question.** With the DRB, enter Body then Body Computer. With the DRB, enter Anti-Lock Brakes. With the DRB, enter Body then Electro/Mechanical Cluster (MIC). With the DRB, enter Passive Restraints then Airbag. Were you able to establish communications with any of the modules? Yes → Go To 2 No → Refer to symptom PCI Bus Communication Failure in the Communications category. Perform ROAD TEST VERIFICATION - VER-2.	All
2	With the DRB read ECM Diagnostic Trouble Codes. This is to ensure power and grounds to the ECM are operational. **NOTE: If the DRB will not read ECM DTCs, follow the NO RESPONSE TO ECM (SCI only) symptom path, if vehicle will start. For NO START Conditions follow the no start symptom in the powertrain diagnostic information.** Turn the ignition off. Disconnect the ECM harness connectors. Use Scope input cable CH7058, Cable to Probe adapter CH7062, and the red and black test probes. Connect the scope input cable to the channel one connector on the DRB. Attach the red and black leads and the cable to probe adapter to the scope input cable. With the DRBIII® select Pep Module Tools. Select lab scope. Select Live Data. Select 12 volt square wave. Press F2 for Scope. Press F2 and use the down arrow to set voltage range to 20 volts. Press F2 again when complete. Connect the Black lead to ground. Connect the Red lead to the PCI Bus circuit in the ECM connector. Turn the ignition on. Observe the voltage display on the DRB Lab Scope. Does the voltage pulse from 0 to approximately 7.5 volts? Yes → Replace and program the Engine Control Module in accordance with the Service Information. Perform ROAD TEST VERIFICATION - VER-2. No → Repair the PCI Bus circuit for an open. Perform ROAD TEST VERIFICATION - VER-2.	All

Symptom:

***NO RESPONSE FROM ECM (SCI ONLY) - DIESEL ONLY**

POSSIBLE CAUSES
CHECK ECM POWERS AND GROUNDS
CABIN HEATER ASSIST
SCI TRANSMIT CIRCUIT SHORTED TO VOLTAGE
SCI TRANSMIT CIRCUIT SHORTED TO GROUND
SCI TRANSMIT CIRCUIT OPEN
ENGINE CONTROL MODULE

TEST	ACTION	APPLICABILITY
1	Perform the symptom Checking ECM Power and Ground Circuits in the Driveability category. Did the vehicle pass this test? Yes → Go To 2 No → Repair as necessary. Perform ROAD TEST VERIFICATION - VER-2.	All
2	Turn the ignition off. Disconnect the ECM harness connectors. Disconnect the DRB from the DLC. Measure the resistance between ground and the SCI Transmit circuit. Is the resistance below 5.0 ohms? Yes → Go To 3 No → Go To 4	All
3	Turn the ignition off. Disconnect the Cabin Heater Assist C1 harness connector. Measure the resistance between ground and the SCI Transmit circuit. Is the resistance below 5.0 ohms? Yes → Repair the SCI Transmit circuit for a short to ground. Perform ROAD TEST VERIFICATION - VER-2. No → Replace the Cabin Heater Assist in accordance with the service information. Perform ROAD TEST VERIFICATION - VER-2.	All
4	Turn the ignition off. Disconnect the DRB from the DLC. Disconnect the ECM harness connectors. Disconnect the Cabin Heater Assist C1 harness connector. Turn the ignition on. Measure the voltage of the SCI Transmit circuit at the DLC connector (cav 7). Is the voltage above 1.0 volt? Yes → Repair the SCI Transmit circuit for a short to voltage. Perform ROAD TEST VERIFICATION - VER-2. No → Go To 5	All

*NO RESPONSE FROM ECM (SCI ONLY) - DIESEL ONLY — Continued

TEST	ACTION	APPLICABILITY
5	Turn the ignition off. Disconnect the ECM harness connectors. Disconnect the DRB from the DLC. Measure the resistance of the SCI Transmit circuit between the ECM connector and the DLC. Is the resistance below 5.0 ohms? Yes → Go To 6 No → Repair the SCI Transmit circuit for an open. Perform ROAD TEST VERIFICATION - VER-2.	All
6	If there are no possible causes remaining, view repair. Repair Replace and program the Engine Control Module in accordance with the Service Information. Perform ROAD TEST VERIFICATION - VER-2.	All

Symptom:

***NO RESPONSE FROM FRONT CONTROL MODULE**

POSSIBLE CAUSES
ATTEMPT TO COMMUNICATE WITH ANOTHER MODULE
OPEN GROUND CIRCUIT(S)
OPEN PCI BUS CIRCUIT
FRONT CONTROL MODULE

TEST	ACTION	APPLICABILITY
1	Turn the ignition on. With the DRB, attempt to communicate with the Occupant Restraint Controller (ORC). With the DRB, attempt to communicate with the Controller Antilock Brake (CAB) module. With the DRB, attempt to communicate with the Body Control Module (BCM). Was the DRB able to I/D or communicate with any of the modules? Yes → Go To 2 No → Refer to symptom list for problems related to the PCI Bus Communication Failure. Perform BODY VERIFICATION TEST - VER 1.	All
2	Turn the ignition off. Remove the Front Control Module from the IPM. Using a 12-volt test light connected to 12-volts, probe both Ground circuits. Is the test light illuminated for each circuit? Yes → Go To 3 No → Repair the Ground circuit(s) for an open. Perform BODY VERIFICATION TEST - VER 1.	All

*NO RESPONSE FROM FRONT CONTROL MODULE — Continued

TEST	ACTION	APPLICABILITY
3	**Note: Ensure there is PCI Bus communication with other modules on the vehicle before proceeding. If not, refer to the symptom list from the menu and repair as necessary.** Remove the Front Control Module from the IPM. Use Scope input cable CH7058, Cable to Probe adapter CH7062, and the red and black test probes. Connect the scope input cable to the channel one connector on the DRB. Attach the red and black leads and the cable to probe adapter to the scope input cable. With the DRBIII® select Pep Module Tools. Select lab scope. Select Live Data. Select 12 volt square wave. Press F2 for Scope. Press F2 and use the down arrow to set voltage range to 20 volts. Press F2 again when complete. Connect the Black lead to the chassis ground. Connect the Red lead to the PCI Bus circuit in the FCM connector. Turn the ignition on. Observe the voltage display on the DRB Lab Scope. Does the voltage pulse from 0 to approximately 7.5 volts? Yes → Go To 4 No → Repair the PCI Bus circuit for an open. Perform BODY VERIFICATION TEST - VER 1.	All
4	If there are no possible causes remaining, view repair. Repair Replace the Front Control Module in accordance with the service information. Perform BODY VERIFICATION TEST - VER 1.	All

Symptom:

***NO RESPONSE FROM HANDS FREE MODULE**

POSSIBLE CAUSES
ATTEMPT TO COMMUNICATE WITH THE RADIO
GROUND CIRCUIT OPEN
FUSED B(+) CIRCUIT OPEN
OPEN PCI BUS CIRCUIT
HANDS FREE MODULE

TEST	ACTION	APPLICABILITY
1	Turn the ignition on. With the DRBIII®, attempt to communicate with the radio. Was the DRBIII® able to I/D or communicate with the Radio? Yes → Go To 2 No → Refer to the symptom list for problems related to no communication with the Radio Perform BODY VERIFICATION TEST - VER 1.	All
2	Turn the ignition off. Disconnect the Hands Free Module C1 harness connector. Using a 12-volt test light connected to 12-volts, probe the ground circuit. Is the test light illuminated? Yes → Go To 3 No → Repair the ground circuit for an open. Perform BODY VERIFICATION TEST - VER 1.	All
3	Turn the ignition off. Disconnect the Hands Free Module C1 harness connector. Using a 12-volt test light connected to ground, probe the Fused B(+) circuit. Is the test light illuminated? Yes → Go To 4 No → Repair the Fused B+ circuit for an open. Perform BODY VERIFICATION TEST - VER 1.	All

*NO RESPONSE FROM HANDS FREE MODULE — Continued

TEST	ACTION	APPLICABILITY
4	**Note: Ensure there is PCI Bus communication with other modules on the vehicle before proceeding. If not, refer to the symptom list from the menu and repair as necessary.** Disconnect the Hands Free Module C2 harness connector. Use Scope input cable CH7058, Cable to Probe adapter CH7062, and the red and black test probes. Connect the scope input cable to the channel one connector on the DRB. Attach the red and black leads and the cable to probe adapter to the scope input cable. With the DRBIII® select Pep Module Tools. Select lab scope. Select Live Data. Select 12 volt square wave. Press F2 for Scope. Press F2 and use the down arrow to set voltage range to 20 volts. Press F2 again when complete. Connect the Black lead to the chassis ground. Connect the Red lead to the PCI Bus circuit in the Hands Free Module connector. Turn the ignition on. Observe the voltage display on the DRB Lab Scope. Does the voltage pulse from 0 to approximately 7.5 volts? Yes → Replace the Hands Free Module in accordance with the Service Information. Perform BODY VERIFICATION TEST - VER 1. No → Repair the PCI Bus circuit for an open. If OK, replace the Radio. Perform BODY VERIFICATION TEST - VER 1.	All

Symptom:

***NO RESPONSE FROM HVAC**

POSSIBLE CAUSES
ATTEMPT TO COMMUNICATE WITH THE BCM
GROUND CIRCUIT OPEN
IGNITION SWITCH OUTPUT CIRCUIT OPEN
OPEN PCI BUS CIRCUIT
A/C HEATER CONTROL

TEST	ACTION	APPLICABILITY
1	Turn the ignition on. With the DRB, enter Body then Body Computer. Was the DRB able to I/D or communicate with the BCM? Yes → Go To 2 No → Refer to the symptom list for problems related to no communication with the BCM. Perform BODY VERIFICATION TEST - VER 1.	All
2	Turn the ignition off. Disconnect the A/C Heater Control C1 harness connector. Using a 12-volt test light connected to 12-volts, probe the ground circuit. Is the test light illuminated? Yes → Go To 3 No → Repair the Ground circuit for an open. Perform BODY VERIFICATION TEST - VER 1.	All
3	Turn the ignition off. Disconnect the A/C Heater Control C1 harness connector. Turn the ignition on. Using a 12-volt test light connected to ground, probe the Ignition Switch Output circuit. Is the test light illuminated? Yes → Go To 4 No → Repair the Ignition Switch Output circuit for an open or short. Perform BODY VERIFICATION TEST - VER 1.	All

*NO RESPONSE FROM HVAC — Continued

TEST	ACTION	APPLICABILITY
4	**Note: Ensure there is PCI Bus communication with other modules on the vehicle before proceeding. If not, refer to the symptom list from the menu and repair as necessary.** Disconnect the A/C Heater Control C1 harness connector. Use Scope input cable CH7058, Cable to Probe adapter CH7062, and the red and black test probes. Connect the scope input cable to the channel one connector on the DRB. Attach the red and black leads and the cable to probe adapter to the scope input cable. With the DRBIII® select Pep Module Tools. Select lab scope. Select Live Data. Select 12 volt square wave. Press F2 for Scope. Press F2 and use the down arrow to set voltage range to 20 volts. Press F2 again when complete. Connect the Black lead to the chassis ground. Connect the Red lead to the PCI Bus circuit in the A/C Heater Control connector. Turn the ignition on. Observe the voltage display on the DRB Lab Scope. Does the voltage pulse from 0 to approximately 7.5 volts? Yes → Go To 5 No → Repair the PCI Bus circuit for an open. Perform BODY VERIFICATION TEST - VER 1.	All
5	If there are no possible causes remaining, view repair. Repair Replace the A/C Heater Control in accordance with the service information. Perform BODY VERIFICATION TEST - VER 1.	All

Symptom:

***NO RESPONSE FROM INSTRUMENT CLUSTER**

POSSIBLE CAUSES
ATTEMPT TO COMMUNICATE WITH THE BCM
OPEN GROUND CIRCUIT
OPEN FUSED B+ CIRCUIT
OPEN PCI BUS CIRCUIT
INSTRUMENT CLUSTER WAKE UP SENSE CKT OPEN
INSTRUMENT CLUSTER WAKE UP SENSE CKT INTERNALLY OPEN
INSTRUMENT CLUSTER WAKE UP SENSE CKT SHORTED TO VOLTAGE
INSTRUMENT CLUSTER WAKE UP SENSE CKT INTERNALLY SHORTED TO VOLTAGE
INSTRUMENT CLUSTER
BODY CONTROL MODULE

TEST	ACTION	APPLICABILITY
1	Turn the ignition on. With the DRB, enter Body then Body Computer. Was the DRB able to I/D or communicate with the BCM? Yes → Go To 2 No → Refer to the symptom list for problems related to no communication with the BCM. Perform BODY VERIFICATION TEST - VER 1.	All
2	Turn the ignition off. Disconnect the Instrument Cluster harness connector. Using a 12-volt test light connected to 12-volts, probe both ground circuits. Is the test light illuminated for each circuit? Yes → Go To 3 No → Repair the ground circuit for an open. Perform BODY VERIFICATION TEST - VER 1.	All
3	Turn the ignition off. Disconnect the Instrument Cluster harness connector. Using a 12-volt test light connected to ground, probe the Fused B+ circuit. Is the test light illuminated? Yes → Go To 4 No → Repair the Fused B+ circuit for an open. Perform BODY VERIFICATION TEST - VER 1.	All

*NO RESPONSE FROM INSTRUMENT CLUSTER — Continued

TEST	ACTION	APPLICABILITY
4	**Note: Ensure there is PCI Bus communication with other modules on the vehicle before proceeding. If not, refer to the symptom list from the menu and repair as necessary.** Disconnect the Instrument Cluster harness connector. Use Scope input cable CH7058, Cable to Probe adapter CH7062, and the red and black test probes. Connect the scope input cable to the channel one connector on the DRB. Attach the red and black leads and the cable to probe adapter to the scope input cable. With the DRBIII® select Pep Module Tools. Select lab scope. Select Live Data. Select 12 volt square wave. Press F2 for Scope. Press F2 and use the down arrow to set voltage range to 20 volts. Press F2 again when complete. Connect the Black lead to the chassis ground. Connect the Red lead to the PCI Bus circuit in the Instrument Cluster connector. Turn the ignition on. Observe the voltage display on the DRB Lab Scope. Does the voltage pulse from 0 to approximately 7.5 volts? Yes → Go To 5 No → Repair the PCI Bus circuit for an open. Perform BODY VERIFICATION TEST - VER 1.	All
5	Turn the ignition off. Reconnect the Instrument Cluster harness connector. Disconnect the BCM C4 harness connector. Turn the ignition on. Measure the voltage of the Instrument Cluster Wake Up Sense circuit in the BCM C4 connector. Is the voltage above 10.0 volts? Yes → Go To 6 No → Go To 9	All
6	Turn the ignition off. Disconnect the BCM C4 harness connector. Turn the ignition on. Using a 12-volt test light connected to ground, probe the Instrument Cluster Wake Up Sense circuit. Is the test light illuminated? Yes → Go To 7 No → Go To 8	All

*NO RESPONSE FROM INSTRUMENT CLUSTER — Continued

TEST	ACTION	APPLICABILITY
7	Turn the ignition off. Disconnect the BCM C4 harness connector. Disconnect the Instrument Cluster harness connector. Turn the ignition on. Using a 12-volt test light connected to ground, probe the Instrument Cluster Wake Up Sense circuit. Is the test light illuminated? Yes → Repair the Instrument Cluster Wake Up Sense circuit for a short to voltage. Perform BODY VERIFICATION TEST - VER 1. No → Replace the Instrument Cluster in accordance with the service information. Perform BODY VERIFICATION TEST - VER 1.	All
8	Turn the ignition off. Reconnect the BCM C4 harness connector. Disconnect the Instrument Cluster harness connector. Measure the resistance between ground and the Instrument Cluster Wake Up Sense circuit at the Instrument Cluster connector. Open and close a door. This is done to ensure the BCM is awake. Is the resistance below 50.0 ohms? Yes → Replace the Instrument Cluster in accordance with the service information. Perform BODY VERIFICATION TEST - VER 1. No → Replace the Body Control Module in accordance with the service information. Perform BODY VERIFICATION TEST - VER 1.	All
9	Turn the ignition off. Disconnect the Instrument Cluster harness connector. Disconnect the BCM C4 harness connector. Measure the resistance of the Instrument Cluster Wake Up Sense circuit between the BCM C4 connector and the MIC connector. Is the resistance below 5.0 ohms? Yes → Replace the Instrument Cluster in accordance with the service information. Perform BODY VERIFICATION TEST - VER 1. No → Repair the Instrument Cluster Wake Up Sense circuit for an open. Perform BODY VERIFICATION TEST - VER 1.	All

Symptom:

***NO RESPONSE FROM LEFT SLIDING DOOR CONTROL MODULE**

POSSIBLE CAUSES
ATTEMPT TO COMMUNICATE WITH THE BCM
FUSED B(+) CIRCUIT OPEN
GROUND CIRCUIT OPEN
DOOR MOTOR HALL EFFECT SUPPLY SHORT TO GROUND
PCI BUS CIRCUIT OPEN
DOOR MOTOR HALL EFFECT SENSOR SHORT TO GROUND
LEFT SLIDING DOOR WAKE UP SIGNAL WIRE OPEN
LEFT SLIDING DOOR WAKE UP SIGNAL WIRE SHORT TO VOLTAGE
BODY CONTROL MODULE - LEFT SLIDING DOOR WAKE UP GROUND OPEN
LEFT SLIDING DOOR CONTROL MODULE - OPEN

TEST	ACTION	APPLICABILITY
1	Turn the ignition on. With the DRBIII, enter Body then Body Computer. **NOTE: If communications can be established, check for any power sliding door wake up circuit related DTCs. If any are set, perform those related DTCs before proceeding.** Was the DRBIII able to I/D or communicate with the BCM? Yes → Go To 2 No → Refer to the symptom list for problems related to no communication with the BCM. Perform BODY VERIFICATION TEST - VER 1.	All
2	Turn the ignition off. Remove the left sliding door inner trim panel and gain access to the Left Sliding Door Control Module but do not disconnect. While back probing, measure the voltage of the Fused B(+) circuit in the C1 connector. Is the voltage above 11.0 volts? Yes → Go To 3 No → Repair the Fused B(+) circuit for an open. Perform BODY VERIFICATION TEST - VER 1.	All
3	Turn the ignition off. Disconnect the Left Sliding Door Control Module C1 harness connector. Using a 12-volt test light connected to 12-volts, check the Ground circuit. Does the test light illuminate brightly? Yes → Go To 4 No → Repair the Ground circuit for an open. Perform BODY VERIFICATION TEST - VER 1.	All

*NO RESPONSE FROM LEFT SLIDING DOOR CONTROL MODULE — Continued

TEST	ACTION	APPLICABILITY
4	**Note: Ensure there is PCI Bus communication with other modules on the vehicle before proceeding. If not, refer to the symptom list from the menu and repair as necessary.** Disconnect the Left Sliding Door Control Module C2 harness connector. Use Scope input cable CH7058, Cable to Probe adapter CH7062, and the red and black test probes. Connect the scope input cable to the channel one connector on the DRB. Attach the red and black leads and the cable to probe adapter to the scope input cable. With the DRBIII® select Pep Module Tools. Select lab scope. Select Live Data. Select 12 volt square wave. Press F2 for Scope. Press F2 and use the down arrow to set voltage range to 20 volts. Press F2 again when complete. Connect the Black lead to the chassis ground. Connect the Red lead to the PCI Bus circuit in the Left Sliding Door Control Module C2 connector. Turn the ignition on. Observe the voltage display on the DRB Lab Scope. Does the voltage pulse from 0 to approximately 7.5 volts? Yes → Go To 5 No → Repair the PCI Bus circuit for an open. Perform BODY VERIFICATION TEST - VER 1.	All
5	Turn the ignition off. Disconnect the Left Sliding Door Control Module C2 harness connector. Measure the resistance between Ground and the Left Door Motor Hall Effect Supply circuit. Is the resistance below 1000.0 ohms?? No → Go To 6 Yes → Repair the Door Motor Hall Effect Supply circuit for a short to ground. Perform BODY VERIFICATION TEST - VER 1.	All
6	Turn the ignition off. Disconnect the Left Sliding Door Control Module C2 harness connector. Measure the resistance between the Sensor Ground and the Left Door Motor Hall Effect Supply circuit in the C2 connector.. Is the resistance below 1000.0 ohms?? No → Go To 7 Yes → Disconnect the Sliding Door Motor connector and re-measure the resistance for a shorted harness from the Door Motor Hall Effect Supply circuit to the Sensor Ground circuit. If the harness is okay, replace the Sliding Door Motor. Perform BODY VERIFICATION TEST - VER 1.	All

*NO RESPONSE FROM LEFT SLIDING DOOR CONTROL MODULE — Continued

TEST	ACTION	APPLICABILITY
7	Turn the ignition off. Disconnect the Left Sliding Door Control Module C2 harness connector. Turn the ignition on. Measure the resistance between ground and the Left Sliding Door Wake Up Signal circuit. Is the resistance below 50.0 ohms? Yes → Go To 8 No → Go To 9	All
8	Turn the ignition off. Disconnect the Body Control Module C3 harness connector. Disconnect the Left Sliding Door Module C2 harness connector. Turn the ignition on. Measure the voltage of the Left Sliding Door Wake Up Signal circuit. Is there any voltage present? Yes → Repair the Left Sliding Door Wake Up Signal wire for a short to voltage. Perform BODY VERIFICATION TEST - VER 1. No → Replace the Left Sliding Door Control Module in accordance with the service information. Perform BODY VERIFICATION TEST - VER 1.	All
9	Turn the ignition off. Disconnect the Body Control Module C3 harness connector. Disconnect the Left Sliding Door Control Module C2 harness connector. Measure the resistance of the Left Sliding Door Wake Up Signal circuit between the BCM C3 connector and the Left Sliding Door Control Module C2 connector. Is the resistance below 5.0 ohms? Yes → Replace the Body Control Module in accordance with the service information. Perform BODY VERIFICATION TEST - VER 1. No → Repair the Left Sliding Door Wake Up Signal wire for an open. Perform BODY VERIFICATION TEST - VER 1.	All

Symptom:

***NO RESPONSE FROM MEMORY SEAT/MIRROR/ADJUSTABLE PEDALS MODULE**

POSSIBLE CAUSES
ATTEMPT TO COMMUNICATE WITH THE BCM
FUSED B+ CIRCUIT OPEN
GROUND CIRCUIT OPEN
OPEN PCI BUS CIRCUIT
MEMORY SEAT/MIRROR/ADJUSTABLE PEDALS MODULE

TEST	ACTION	APPLICABILITY
1	Turn the ignition on. With the DRB, enter Body then Body Computer. Was the DRB able to I/D or communicate with the BCM? Yes → Go To 2 No → Refer to the symptom list for problems related to no communication with the BCM. Perform MEMORY SYSTEM VERIFICATION TEST - VER 1.	All
2	Turn the ignition off. Disconnect the Memory Seat/Mirror/Adjustable Pedals Module C4 harness connector. Using a 12-volt test light connected to ground, probe the Fused B(+) circuit. Is the test light illuminated? Yes → Go To 3 No → Check the Power Seat Circuit Breaker for an open or short. If ok, repair the Fused B(+) circuit for an open or short. Perform MEMORY SYSTEM VERIFICATION TEST - VER 1.	All
3	Turn the ignition off. Disconnect the Memory Seat/Mirror/Adjustable Pedals Module C4 harness connector. Using a 12-volt test light connected to 12-volts, probe the Ground circuit. Is the test light illuminated? Yes → Go To 4 No → Repair the ground circuit for an open. Perform MEMORY SYSTEM VERIFICATION TEST - VER 1.	All

*NO RESPONSE FROM MEMORY SEAT/MIRROR/ADJUSTABLE PEDALS MODULE — Continued

TEST	ACTION	APPLICABILITY
4	**Note: Ensure there is PCI Bus communication with other modules on the vehicle before proceeding. If not, refer to the symptom list from the menu and repair as necessary.** Turn the ignition off. Disconnect the Memory Seat/Mirror/Adjustable Pedals Module C1 harness connector. Use Scope input cable CH7058, Cable to Probe adapter CH7062, and the red and black test probes. Connect the scope input cable to the channel one connector on the DRB. Attach the red and black leads and the cable to probe adapter to the scope input cable. With the DRBIII® select Pep Module Tools. Select lab scope. Select Live Data. Select 12 volt square wave. Press F2 for Scope. Press F2 and use the down arrow to set voltage range to 20 volts. Press F2 again when complete. Connect the Black lead to the chassis ground. Connect the Red lead to the PCI Bus circuit in the Memory Seat/Mirror/Adjustable Pedals Module connector. Turn the ignition on. Observe the voltage display on the DRB Lab Scope. Does the voltage pulse from 0 to approximately 7.5 volts? Yes → Go To 5 No → Repair the PCI Bus circuit for an open. Perform MEMORY SYSTEM VERIFICATION TEST - VER 1.	All
5	If there are no possible causes remaining, view repair. Repair Replace the Memory Seat/Mirror/Adjustable Pedals Module in accordance with the service information. Perform MEMORY SYSTEM VERIFICATION TEST - VER 1.	All

Symptom:

*NO RESPONSE FROM OCCUPANT CLASSIFICATION MODULE

POSSIBLE CAUSES
ORC RUN-START DRIVER CIRCUIT OPEN
GROUND CIRCUIT OPEN
PCI BUS CIRCUIT OPEN
OCCUPANT CLASSIFICATION MODULE

TEST	ACTION	APPLICABILITY
1	Ensure that the battery is fully charged. **WARNING: TO AVOID PERSONAL INJURY OR DEATH, TURN THE IGNITION OFF, DISCONNECT THE BATTERY AND WAIT TWO MINUTES BEFORE PROCEEDING.** Disconnect the Occupant Classification Module harness connector. Turn the ignition on and then reconnect the Battery. Using a 12-volt test light connected to ground, probe the ORC Run-Start Driver circuit. Is the test light illuminated? Yes → Go To 2 No → Repair the ORC Run-Start Driver circuit for an open. Perform __AIRBAG VERIFICATION TEST - VER 1. **NOTE: When reconnecting airbag system components, the ignition must be turned off and the battery must be disconnected.**	All
2	**Ensure that the battery is fully charged.** **WARNING: TO AVOID PERSONAL INJURY OR DEATH, TURN THE IGNITION OFF, DISCONNECT THE BATTERY AND WAIT TWO MINUTES BEFORE PROCEEDING.** Disconnect the Occupant Classification Module harness connector. Using a 12-volt test light connected to 12-volts, probe the ground circuit. **NOTE: Make sure test light is connected to the Battery positive terminal.** Is the test light illuminated? Yes → Go To 3 No → Repair the Ground circuit for an open. Perform __AIRBAG VERIFICATION TEST - VER 1. **When reconnecting Airbag system components, the ignition must be turned off and the battery must be disconnected.**	All

*NO RESPONSE FROM OCCUPANT CLASSIFICATION MODULE — Continued

TEST	ACTION	APPLICABILITY
3	**Note: Ensure there is PCI bus communication with other modules. If not, refer to the PCI Bus Communication Failure symptom and repair as necessary.** **WARNING: TO AVOID PERSONAL INJURY OR DEATH, TURN THE IGNITION OFF, DISCONNECT THE BATTERY AND WAIT TWO MINUTES BEFORE PROCEEDING.** Disconnect the Occupant Classification Module harness connector. Turn the ignition on and then reconnect the Battery. Use Scope input cable CH7058, Cable to Probe adapter CH7062, and the red and black test probes. Connect the scope input cable to the channel one connector on the DRB. Attach the red and black leads and the cable to probe adapter to the scope input cable. With the DRBIII® select Pep Module Tools. Select lab scope. Select Live Data. Select 12 volt square wave. Press F2 for Scope. Press F2 and use the down arrow to set voltage range to 20 volts. Press F2 again when complete. Connect the Black lead to the chassis ground. Connect the Red lead to the PCI Bus circuit. Observe the voltage display on the DRBIII® Lab Scope. Does the voltage pulse from 0 to approximately 7.5 volts? Yes → Replace the Occupant Classification Module in accordance with the Service lnformation. Perform __AIRBAG VERIFICATION TEST - VER 1. No → Repair the PCI Bus circuit for an open. Perform __AIRBAG VERIFICATION TEST - VER 1.	All

Symptom:
*NO RESPONSE FROM OCCUPANT RESTRAINT CONTROLLER

POSSIBLE CAUSES
CHECKING FOR VOLTAGE
GROUND CIRCUIT OPEN
PCI BUS CIRCUIT OPEN
OCCUPANT RESTRAINT CONTROLLER

TEST	ACTION	APPLICABILITY
1	**NOTE: Check the FCM for DTC's. If DTC's are present, go to the appropriate category and perform the DTC.** Ensure that the battery is fully charged. **WARNING: TO AVOID PERSONAL INJURY OR DEATH, TURN THE IGNITION OFF, DISCONNECT THE BATTERY AND WAIT TWO MINUTES BEFORE PROCEEDING.** Disconnect the ORC C2 harness connector. Connect the appropriate Load Tool ACM Adapter to the ORC connector Turn the ignition on and then reconnect the Battery. Using a 12-volt test light connected to ground, probe the ORC Run Only Driver Circuit and the ORC Run/Start Driver Circuit at the ORC connector. NOTE: One open circuit will not cause a NO RESPONSE condition. Is the test light illuminated on both circuits? Yes → Go To 2 No → Repair the ORC Run Only Driver and the ORC Run/Start Driver circuits for an open. Perform __AIRBAG VERIFICATION TEST - VER 1. **NOTE: When reconnecting airbag system components, the ignition must be turned off and the battery must be disconnected.**	All
2	**Ensure that the battery is fully charged.** **WARNING: TO AVOID PERSONAL INJURY OR DEATH, TURN THE IGNITION OFF, DISCONNECT THE BATTERY AND WAIT TWO MINUTES BEFORE PROCEEDING.** Disconnect the ORC C2 harness connector. Connect the appropriate Load Tool ACM Adapter to the ORC connector. Using a 12-volt test light connected to 12-volts, probe the ground circuit. **NOTE: Make sure test light is connected to the Battery positive terminal.** Is the test light illuminated? Yes → Go To 3 No → Repair the Ground circuit for an open. Perform __AIRBAG VERIFICATION TEST - VER 1. **When reconnecting Airbag system components, the ignition must be turned off and the battery must be disconnected.**	All

*NO RESPONSE FROM OCCUPANT RESTRAINT CONTROLLER — Continued

TEST	ACTION	APPLICABILITY
3	**Note: Ensure there is PCI bus communication with other modules. If not, refer to the PCI Bus Communication Failure symptom and repair as necessary.** **WARNING: TO AVOID PERSONAL INJURY OR DEATH, TURN THE IGNITION OFF, DISCONNECT THE BATTERY AND WAIT TWO MINUTES BEFORE PROCEEDING.** Disconnect the ORC C2 harness connector. Connect the appropriate Load Tool ACM Adapter to the ORC connector. Turn the ignition on and then reconnect the Battery. Use Scope input cable CH7058, Cable to Probe adapter CH7062, and the red and black test probes. Connect the scope input cable to the channel one connector on the DRB. Attach the red and black leads and the cable to probe adapter to the scope input cable. With the DRBIII® select Pep Module Tools. Select lab scope. Select Live Data. Select 12 volt square wave. Press F2 for Scope. Press F2 and use the down arrow to set voltage range to 20 volts. Press F2 again when complete. Connect the Black lead to the chassis ground. Connect the Red lead to the PCI Bus circuit in the ORC connector. Observe the voltage display on the DRB Lab Scope. Does the voltage pulse from 0 to approximately 7.5 volts? Yes → Go To 4 No → Repair the PCI Bus circuit for an open. Perform __AIRBAG VERIFICATION TEST - VER 1.	All
4	If there are no possible causes remaining, view repair. Repair Replace the Occupant Restraint Controller in accordance with the Service information. Perform __AIRBAG VERIFICATION TEST - VER 1.	All

Symptom:

*NO RESPONSE FROM OVERHEAD CONSOLE

POSSIBLE CAUSES
GROUND CIRCUIT OPEN
FUSED IGNITION SWITCH OUTPUT CIRCUIT OPEN
FUSED B+ CIRCUIT OPEN
OPEN PCI BUS CIRCUIT
OVERHEAD CONSOLE

TEST	ACTION	APPLICABILITY
1	Turn the ignition off. Disconnect the Overhead Console harness connector. Using a 12-volt test light connected to 12-volts, probe the ground circuit (cav 4). Is the test light illuminated? Yes → Go To 2 No → Repair the ground circuit for an open. Perform BODY VERIFICATION TEST - VER 1.	All
2	Turn the ignition off. Disconnect the Overhead Console harness connector. Turn the ignition on. Using a 12-volt test light connected to ground, probe the Fused Ignition Switch Output circuit. Is the test light illuminated? Yes → Go To 3 No → Repair the Fused Ignition Switch Output circuit for an open. Refer to the wiring diagrams located in the Service Information. Perform BODY VERIFICATION TEST - VER 1.	All
3	Turn the ignition off. Disconnect the Overhead Console harness connector. Using a 12-volt test light connected to ground, probe the Fused B+ circuit. Is the test light illuminated? Yes → Go To 4 No → Repair the Fused B+ circuit for an open. Refer to the wiring diagrams located in the Service Information. Perform BODY VERIFICATION TEST - VER 1.	All

*NO RESPONSE FROM OVERHEAD CONSOLE — Continued

TEST	ACTION	APPLICABILITY
4	**Note: Ensure there is PCI Bus communication with other modules on the vehicle before proceeding. If not, refer to the symptom list from the menu and repair as necessary.** Disconnect the Overhead Console harness connector. Use Scope input cable CH7058, Cable to Probe adapter CH7062, and the red and black test probes. Connect the scope input cable to the channel one connector on the DRB. Attach the red and black leads and the cable to probe adapter to the scope input cable. With the DRBIII® select Pep Module Tools. Select lab scope. Select Live Data. Select 12 volt square wave. Press F2 for Scope. Press F2 and use the down arrow to set voltage range to 20 volts. Press F2 again when complete. Connect the Black lead to the chassis ground. Connect the Red lead to the PCI Bus circuit in the Overhead Console connector. Turn the ignition on. Observe the voltage display on the DRB Lab Scope. Does the voltage pulse from 0 to approximately 7.5 volts? Yes → Go To 5 No → Repair the PCI Bus circuit for an open. Perform BODY VERIFICATION TEST - VER 1.	All
5	If there are no possible causes remaining, view repair. Repair Replace the Overhead Console in accordance with the service information. Perform BODY VERIFICATION TEST - VER 1.	All

Symptom:
*NO RESPONSE FROM PARK ASSIST MODULE

POSSIBLE CAUSES
ATTEMPT TO COMMUNICATE WITH THE BCM
GROUND CIRCUIT OPEN
FUSED IGNITION SWITCH OUTPUT CIRCUIT OPEN
OPEN PCI BUS CIRCUIT
PARK ASSIST MODULE

TEST	ACTION	APPLICABILITY
1	Turn the ignition on. With the DRBIII®, attempt to communicate with the BCM. Was the DRBIII® able to I/D or communicate with the BCM? Yes → Go To 2 No → Refer to the symptom list for problems related to no communication with the BCM. Perform BODY VERIFICATION TEST - VER 1.	All
2	Turn the ignition off. Disconnect the Park Assist Module harness connector. Using a 12-volt test light connected to 12-volts, probe each ground circuit. Is the test light illuminated for each circuit? Yes → Go To 3 No → Repair the ground circuit for an open. Perform BODY VERIFICATION TEST - VER 1.	All
3	Turn the ignition off. Disconnect the Park Assist Module harness connector. Turn the ignition on. Using a 12-volt test light connected to ground, probe the Fused Ignition Switch Output circuit. Is the test light illuminated? Yes → Go To 4 No → Repair the Fused Ignition Switch Output circuit for an open. Perform BODY VERIFICATION TEST - VER 1.	All

*NO RESPONSE FROM PARK ASSIST MODULE — Continued

TEST	ACTION	APPLICABILITY
4	**Note: Ensure there is PCI Bus communication with other modules on the vehicle before proceeding. If not, refer to the symptom list from the menu and repair as necessary.** Disconnect the Park Assist Module harness connector. Use Scope input cable CH7058, Cable to Probe adapter CH7062, and the red and black test probes. Connect the scope input cable to the channel one connector on the DRB. Attach the red and black leads and the cable to probe adapter to the scope input cable. With the DRBIII® select Pep Module Tools. Select lab scope. Select Live Data. Select 12 volt square wave. Press F2 for Scope. Press F2 and use the down arrow to set voltage range to 20 volts. Press F2 again when complete. Connect the Black lead to the chassis ground. Connect the Red lead to the PCI Bus circuit in the Park Assist Module connector. Turn the ignition on. Observe the voltage display on the DRB Lab Scope. Does the voltage pulse from 0 to approximately 7.5 volts? Yes → Replace the Park Assist Module in accordance with the Service Information. Perform BODY VERIFICATION TEST - VER 1. No → Repair the PCI Bus circuit for an open. Perform BODY VERIFICATION TEST - VER 1.	All

Symptom:

*NO RESPONSE FROM PCM (PCI BUS) - NGC

POSSIBLE CAUSES
PCM PCI NO RESPONSE
POWERTRAIN CONTROL MODULE
PCI BUS CIRCUIT OPEN

TEST	ACTION	APPLICABILITY
1	Turn the ignition on. **NOTE: As soon as one or more module communicates with the DRB, answer the question.** With the DRB, enter Body then Body Computer With the DRB, enter Body then Electro/Mechanical Cluster (MIC). With the DRB, enter Passive Restraints then Airbag. Were you able to establish communications with any of the modules? Yes → Go To 2 No → Refer to symptom PCI Bus Communication Failure in the Communications category. Perform POWERTRAIN VERIFICATION TEST VER - 1 - NGC.	All
2	With the DRB read the Powertrain DTC's. This is to ensure power and grounds to the PCM are operational. **NOTE: If the DRB will not read PCM DTC's, follow the NO RESPONSE TO PCM (PCM SCI only) symptom path.** Turn the ignition off. Disconnect the PCM harness connectors. **CAUTION: DO NOT PROBE THE PCM HARNESS CONNECTORS. PROBING THE PCM HARNESS CONNECTORS WILL DAMAGE THE PCM TERMINALS RESULTING IN POOR TERMINAL TO PIN CONNECTION. INSTALL MILLER SPECIAL TOOL #8815 TO PERFORM DIAGNOSIS.** Use Scope input cable CH7058, Cable to Probe adapter CH7062, and the red and black test probes. Connect the scope input cable to the channel one connector on the DRB. Attach the red and black leads and the cable to probe adapter to the scope input cable. With the DRBIII® select Pep Module Tools. Select lab scope. Select Live Data. Select 12 volt square wave. Press F2 for Scope. Press F2 and use the down arrow to set voltage range to 20 volts. Press F2 again when complete. Connect the Black lead to the chassis ground. Connect the Red lead to the PCI Bus circuit in the appropriate terminal of special tool #8815. Turn the ignition on. Observe the voltage display on the DRB Lab Scope. Does the voltage pulse from 0 to approximately 7.5 volts? Yes → Replace and program the Powertrain Control Module in accordance with the Service Information. Perform POWERTRAIN VERIFICATION TEST VER - 1 - NGC. No → Repair the PCI Bus circuit for an open. Perform POWERTRAIN VERIFICATION TEST VER - 1 - NGC.	All

Symptom:

*NO RESPONSE FROM PCM (PCM SCI ONLY) - NGC

POSSIBLE CAUSES
CHECK PCM POWERS AND GROUNDS
PCM SCI TRANSMIT CIRCUIT SHORTED TO VOLTAGE
PCM SCI RECEIVE CIRCUIT SHORTED TO VOLTAGE
PCM SCI CIRCUITS SHORTED TOGETHER
PCM SCI TRANSMIT CIRCUIT SHORTED TO GROUND
PCM SCI RECEIVE CIRCUIT SHORTED TO GROUND
PCM SCI RECEIVE CIRCUIT OPEN
PCM SCI TRANSMIT CIRCUIT OPEN
POWERTRAIN CONTROL MODULE

TEST	ACTION	APPLICABILITY
1	Perform the symptom Checking PCM Power and Ground Circuits in the Driveability category. **NOTE: With the DRBIII® in the generic scan tool mode, attempt to communicate with the PCM.** **NOTE: If the DRBIII® can communicate with the PCM in the generic scan tool mode, it may not be necessary to perform this step.** Did the vehicle pass this test? Yes → Go To 2 No → Repair as necessary. Perform POWERTRAIN VERIFICATION TEST VER - 1 - NGC.	All
2	Turn the ignition off. Disconnect the DRBIII® from the DLC. Disconnect the PCM harness connectors. Turn the ignition on. Measure the voltage of the PCM SCI Transmit circuit at the Data Link harness connector (cav 7). Is the voltage above 1.0 volt? Yes → Repair the PCM SCI Transmit circuit for a short to voltage. Perform POWERTRAIN VERIFICATION TEST VER - 1 - NGC. No → Go To 3	All
3	Turn the ignition off. Disconnect the DRBIII® from the DLC. Disconnect the PCM harness connectors. Turn the ignition on. Measure the voltage of the PCM SCI Receive circuit at the Data Link harness connector (cav 12). Is the voltage above 1.0 volt? Yes → Repair the PCM SCI Receive circuit for a short to voltage. Perform POWERTRAIN VERIFICATION TEST VER - 1 - NGC. No → Go To 4	All

*NO RESPONSE FROM PCM (PCM SCI ONLY) - NGC — Continued

TEST	ACTION	APPLICABILITY
4	Turn the ignition off. Disconnect the DRBIII® from the DLC. Disconnect the PCM harness connectors. Measure the resistance between the PCM SCI Transmit circuit and the PCM SCI Receive circuit at the Data Link harness connector (cavs 7 and 12). Is the resistance below 5.0 ohms? Yes → Repair the short between the PCM SCI Transmit and the PCM SCI Receive circuits. Perform POWERTRAIN VERIFICATION TEST VER - 1 - NGC. No → Go To 5	All
5	Turn the ignition off. Disconnect the PCM harness connectors. Disconnect the DRBIII® from the DLC. Measure the resistance between ground and the PCM SCI Transmit circuit at the Data Link harness connector (cav 7). Is the resistance below 5.0 ohms? Yes → Repair the PCM SCI Transmit circuit for a short to ground. Perform POWERTRAIN VERIFICATION TEST VER - 1 - NGC. No → Go To 6	All
6	Turn the ignition off. Disconnect the PCM harness connector. Disconnect the DRBIII® from the DLC. Measure the resistance between ground and the PCM SCI Receive circuit in the Data Link harness connector (cav 12). Is the resistance below 5.0 ohms? Yes → Repair the PCM SCI Receive circuit for a short to ground. Perform POWERTRAIN VERIFICATION TEST VER - 1 - NGC. No → Go To 7	All
7	Turn the ignition off. Disconnect the PCM harness connector. Disconnect the DRBIII® from the DLC. **CAUTION: DO NOT PROBE THE PCM HARNESS CONNECTORS. PROBING THE PCM HARNESS CONNECTORS WILL DAMAGE THE PCM TERMINALS RESULTING IN POOR TERMINAL TO PIN CONNECTION. INSTALL MILLER SPECIAL TOOL #8815 TO PERFORM DIAGNOSIS.** Measure the resistance of the PCM SCI Receive circuit from the Data Link harness connector (cav 12) to the appropriate terminal of special tool #8815. Is the resistance below 5.0 ohms? Yes → Go To 8 No → Repair the PCM SCI Receive circuit for an open. Perform POWERTRAIN VERIFICATION TEST VER - 1 - NGC.	All

*NO RESPONSE FROM PCM (PCM SCI ONLY) - NGC — Continued

TEST	ACTION	APPLICABILITY
8	Turn the ignition off. Disconnect the PCM harness connector. Disconnect the DRBIII® from the DLC. **CAUTION: DO NOT PROBE THE PCM HARNESS CONNECTORS. PROBING THE PCM HARNESS CONNECTORS WILL DAMAGE THE PCM TERMINALS RESULTING IN POOR TERMINAL TO PIN CONNECTION. INSTALL MILLER SPECIAL TOOL #8815 TO PERFORM DIAGNOSIS.** Measure the resistance of the PCM SCI Transmit circuit from the Data Link harness connector (cav 7) to the appropriate terminal of special tool #8815. Is the resistance below 5.0 ohms? Yes → Go To 9 No → Repair the PCM SCI Transmit circuit for an open. Perform POWERTRAIN VERIFICATION TEST VER - 1 - NGC.	All
9	If there are no possible causes remaining, view repair. Repair Replace and program the Powertrain Control Module in accordance with the Service Information. Perform POWERTRAIN VERIFICATION TEST VER - 1 - NGC.	All

Symptom:

*NO RESPONSE FROM POWER LIFTGATE MODULE

POSSIBLE CAUSES
ATTEMPT TO COMMUNICATE WITH THE BCM
FUSED B(+) CIRCUIT OPEN
GROUND CIRCUIT OPEN
LIFTGATE HALL EFFECT SENSOR SHORT TO GROUND
LIFTGATE HALL EFFECT SUPPLY SHORT TO GROUND
BODY CONTROL MODULE - LIFTGATE WAKE UP GROUND OPEN
LIFTGATE MODULE WAKE UP SIGNAL WIRE OPEN
LIFTGATE MODULE WAKE UP SIGNAL WIRE SHORT TO VOLTAGE
PCI BUS CIRCUIT OPEN
POWER LIFTGATE MODULE - OPEN

TEST	ACTION	APPLICABILITY
1	Turn the ignition on. With the DRBIII, enter Body then Body Computer. **NOTE: If communications can be established, check for any liftgate wake up circuit related DTCs. If any are set, perform those related DTCs before proceeding.** Was the DRBIII able to I/D or communicate with the BCM? Yes → Go To 2 No → Refer to the symptom list for problems related to no communication with the BCM. Perform BODY VERIFICATION TEST - VER 1.	All
2	Turn the ignition off. Remove the liftgate trim panel to gain access to the Power Liftgate Module but do not disconnect. While back probing, measure the voltage of the Fused B(+) circuit. Is the voltage above 11.0 volts? Yes → Go To 3 No → Repair the Fused B(+) circuit for an open. Perform BODY VERIFICATION TEST - VER 1.	All
3	Turn the ignition off. Disconnect the Power Liftgate Module C1 harness connector. Using a 12-volt test light connected to 12-volts, check the Ground circuit. Does the test light illuminate brightly? Yes → Go To 4 No → Repair the Ground circuit for an open. Perform BODY VERIFICATION TEST - VER 1.	All

*NO RESPONSE FROM POWER LIFTGATE MODULE — Continued

TEST	ACTION	APPLICABILITY
4	**Note: Ensure there is PCI Bus communication with other modules on the vehicle before proceeding. If not, refer to the symptom list from the menu and repair as necessary.** Disconnect the Power Liftgate Module C2 harness connector. Use Scope input cable CH7058, Cable to Probe adapter CH7062, and the red and black test probes. Connect the scope input cable to the channel one connector on the DRB. Attach the red and black leads and the cable to probe adapter to the scope input cable. With the DRBIII® select Pep Module Tools. Select lab scope. Select Live Data. Select 12 volt square wave. Press F2 for Scope. Press F2 and use the down arrow to set voltage range to 20 volts. Press F2 again when complete. Connect the Black lead to the chassis ground. Connect the Red lead to the PCI Bus circuit in the Power Liftgate Module C2 connector. Turn the ignition on. Observe the voltage display on the DRB Lab Scope. Does the voltage pulse from 0 to approximately 7.5 volts? Yes → Go To 5 No → Repair the PCI Bus circuit for an open. Perform BODY VERIFICATION TEST - VER 1.	All
5	Turn the ignition off. Disconnect the Power Liftgate Module C2 harness connector. Measure the resistance between Ground and the Liftgate Hall Effect Supply circuit. Is the resistance below 1000.0 ohms?? No → Go To 6 Yes → Repair the Liftgate Hall Effect Supply circuit for a short to ground. Perform BODY VERIFICATION TEST - VER 1.	All
6	Turn the ignition off. Disconnect the Power Liftgate Module C2 harness connector. Measure the resistance between the Sensor Ground and the Power Liftgate Hall Effect Supply circuit in the C2 connector.. Is the resistance below 1000.0 ohms?? No → Go To 7 Yes → Disconnect the Power Liftgate Motor connector and re-measure the resistance for a shorted harness from the Liftgate Hall Effect Supply circuit to the Sensor Ground circuit in the connector. If the harness is okay, replace the Power Liftgate Motor. Perform BODY VERIFICATION TEST - VER 1.	All
7	Turn the ignition off. Disconnect the Power Liftgate Module C2 harness connector. Turn the ignition on. Measure the resistance between ground and the Liftgate Module Wake Up Signal circuit. Is the resistance below 50.0 ohms? Yes → Go To 8 No → Go To 9	All

*NO RESPONSE FROM POWER LIFTGATE MODULE — Continued

TEST	ACTION	APPLICABILITY
8	Turn the ignition off. Disconnect the Body Control Module C2 harness connector. Disconnect the Power Liftgate Module C2 harness connector. Turn the ignition on. Measure the voltage of the Liftgate Module Wake Up Signal circuit. Is there any voltage present? Yes → Repair the Liftgate Module Wake Up Signal wire for a short to voltage. Perform BODY VERIFICATION TEST - VER 1. No → Replace the Power Liftgate Module in accordance with the service information. Perform BODY VERIFICATION TEST - VER 1.	All
9	Turn the ignition off. Disconnect the Body Control Module C2 harness connector. Disconnect the Power Liftgate Module C2 harness connector. Measure the resistance of the Liftgate Module Wake Up Signal circuit between the BCM C2 connector and the Power Liftgate Module C2 connector. Is the resistance below 5.0 ohms? Yes → Replace the Body Control Module in accordance with the service information. Perform BODY VERIFICATION TEST - VER 1. No → Repair the Liftgate Module Wake Up Signal wire for an open. Perform BODY VERIFICATION TEST - VER 1.	All

Symptom:
*NO RESPONSE FROM RADIO

POSSIBLE CAUSES
NO RESPONSE FROM RADIO
OPEN FUSED ACCESSORY RELAY OUTPUT CIRCUIT
OPEN FUSED B+ CIRCUIT
GROUND CIRCUIT OPEN
OPEN PCI BUS CIRCUIT
RADIO

TEST	ACTION	APPLICABILITY
1	Turn the ignition on. **Note: As soon as one or more module communicates with the DRB, answer the question.** With the DRB, attempt to communicate with the Occupant Restraint Controller (ORC). With the DRB, attempt to communicate with the Body Control Module (BCM). Was the DRB able to I/D or establish communications with either of the modules? Yes → Go To 2 No → Refer to the Communications category and perform the symptom PCI Bus Communication Failure. Perform BODY VERIFICATION TEST - VER 1.	All
2	Turn the ignition off. Disconnect the Radio C1 harness connector. Turn the ignition on. Using a 12-volt test light connected to ground, probe the Fused Accessory Relay Output circuit. Is the test light illuminated? Yes → Go To 3 No → Check fuse #5 in the IPM for an open. If ok, repair the Fused Accessory Relay Output circuit for an open or short. Refer to the wiring diagrams located in the Service Information. Perform BODY VERIFICATION TEST - VER 1.	All
3	Turn the ignition off. Disconnect the Radio C1 harness connector. Using a 12-volt test light connected to ground, probe both Fused B+ circuits. Is the test light illuminated for each circuit? Yes → Go To 4 No → Check fuse #14 in the IPM for an open. If ok, repair the Fused B+ circuit for an open or short. Refer to the wiring diagrams located in the Service Information. Perform BODY VERIFICATION TEST - VER 1.	All

*NO RESPONSE FROM RADIO — Continued

TEST	ACTION	APPLICABILITY
4	Turn the ignition off. Disconnect the Radio C1 harness connector. Using a 12-volt test light connected to 12-volts, probe both ground circuits. Is the test light illuminated for each circuit? Yes → Go To 5 No → Repair the ground circuit for an open. Perform BODY VERIFICATION TEST - VER 1.	All
5	**Note: Ensure there is PCI Bus communication with other modules on the vehicle before proceeding. If not, refer to the symptom list from the menu and repair as necessary.** Disconnect the Radio C1 harness connector. Use Scope input cable CH7058, Cable to Probe adapter CH7062, and the red and black test probes. Connect the scope input cable to the channel one connector on the DRB. Attach the red and black leads and the cable to probe adapter to the scope input cable. With the DRBIII® select Pep Module Tools. Select lab scope. Select Live Data. Select 12 volt square wave. Press F2 for Scope. Press F2 and use the down arrow to set voltage range to 20 volts. Press F2 again when complete. Connect the Black lead to the chassis ground. Connect the Red lead to the PCI Bus circuit in the Radio connector. Turn the ignition on. Observe the voltage display on the DRB Lab Scope. Does the voltage pulse from 0 to approximately 7.5 volts? Yes → Go To 6 No → Repair the PCI Bus circuit for an open. Perform BODY VERIFICATION TEST - VER 1.	All
6	If there are no possible causes remaining, view repair. Repair Replace the Radio. Perform BODY VERIFICATION TEST - VER 1.	All

Symptom:

***NO RESPONSE FROM RIGHT SLIDING DOOR CONTROL MODULE**

POSSIBLE CAUSES
ATTEMPT TO COMMUNICATE WITH THE BCM
FUSED B(+) CIRCUIT OPEN
GROUND CIRCUIT OPEN
DOOR MOTOR HALL EFFECT SUPPLY SHORT TO GROUND
PCI BUS CIRCUIT OPEN
DOOR MOTOR HALL EFFECT SENSOR SHORT TO GROUND
RIGHT SLIDING DOOR WAKE UP SIGNAL WIRE OPEN
RIGHT SLIDING DOOR WAKE UP SIGNAL WIRE SHORT TO VOLTAGE
BODY CONTROL MODULE - RIGHT SLIDING DOOR WAKE UP GROUND OPEN
RIGHT POWER SLIDING DOOR MODULE - OPEN

TEST	ACTION	APPLICABILITY
1	Turn the ignition on. With the DRBIII, enter Body then Body Computer. **NOTE: If communications can be established, check for any power sliding door wake up circuit related DTCs. If any are set, perform those related DTCs before proceeding.** Was the DRBIII able to I/D or communicate with the BCM? Yes → Go To 2 No → Refer to the symptom list for problems related to no communication with the BCM. Perform BODY VERIFICATION TEST - VER 1.	All
2	Turn the ignition off. Disconnect the Right Sliding Door Control Module C1 harness connector. Measure the voltage of the Fused B(+) circuit. Is the voltage above 10.0 volts? Yes → Go To 3 No → Repair the Fused B(+) circuit for an open. Perform BODY VERIFICATION TEST - VER 1.	All
3	Turn the ignition off. Disconnect the Right Sliding Door Control Module C1 harness connector. Using a 12-volt test light connected to 12-volts, check the Ground circuit. Does the test light illuminate brightly? Yes → Go To 4 No → Repair the Ground circuit for an open. Perform BODY VERIFICATION TEST - VER 1.	All

*NO RESPONSE FROM RIGHT SLIDING DOOR CONTROL MODULE — Continued

TEST	ACTION	APPLICABILITY
4	**Note: Ensure there is PCI Bus communication with other modules on the vehicle before proceeding. If not, refer to the symptom list from the menu and repair as necessary.** Disconnect the Right Sliding Door Control Module C2 harness connector. Use Scope input cable CH7058, Cable to Probe adapter CH7062, and the red and black test probes. Connect the scope input cable to the channel one connector on the DRB. Attach the red and black leads and the cable to probe adapter to the scope input cable. With the DRBIII® select Pep Module Tools. Select lab scope. Select Live Data. Select 12 volt square wave. Press F2 for Scope. Press F2 and use the down arrow to set voltage range to 20 volts. Press F2 again when complete. Connect the Black lead to the chassis ground. Connect the Red lead to the PCI Bus circuit in the Right Sliding Door Control Module C2 connector. Turn the ignition on. Observe the voltage display on the DRB Lab Scope. Does the voltage pulse from 0 to approximately 7.5 volts? Yes → Go To 5 No → Repair the PCI Bus circuit for an open. Perform BODY VERIFICATION TEST - VER 1.	All
5	Turn the ignition off. Disconnect the Right Sliding Door Control Module C2 harness connector. Measure the resistance between Ground and the Right Door Motor Hall Effect Supply circuit. Is the resistance below 1000.0 ohms?? No → Go To 6 Yes → Repair the Door Motor Hall Effect Supply circuit for a short to ground. Perform BODY VERIFICATION TEST - VER 1.	All
6	Turn the ignition off. Disconnect the Right Sliding Door Control Module C2 harness connector. Measure the resistance between the Sensor Ground and the Right Door Motor Hall Effect Supply circuit in the C2 connector.. Is the resistance below 1000.0 ohms?? No → Go To 7 Yes → Disconnect the Sliding Door Motor connector and re-measure the resistance for a shorted harness from the Door Motor Hall Effect Supply circuit to the Sensor Ground circuit. If the harness is okay, replace the Sliding Door Motor. Perform BODY VERIFICATION TEST - VER 1.	All

*NO RESPONSE FROM RIGHT SLIDING DOOR CONTROL MODULE — Continued

TEST	ACTION	APPLICABILITY
7	Turn the ignition off. Disconnect the Right Sliding Door Control Module C2 harness connector. Turn the ignition on. Measure the resistance between ground and the Right Sliding Door Wake Up Signal circuit. Is the resistance below 50.0 ohms? Yes → Go To 8 No → Go To 9	All
8	Turn the ignition off. Disconnect the Body Control Module C3 harness connector. Disconnect the Right Sliding Door Module C2 harness connector. Turn the ignition on. Measure the voltage of the Right Sliding Door Wake Up Signal circuit. Is there any voltage present? Yes → Repair the Right Sliding Door Wake Up Signal wire for a short to voltage. Perform BODY VERIFICATION TEST - VER 1. No → Replace the Right Sliding Door Control Module in accordance with the service information. Perform BODY VERIFICATION TEST - VER 1.	All
9	Turn the ignition off. Disconnect the Body Control Module C3 harness connector. Disconnect the Right Sliding Door Control Module C2 harness connector. Measure the resistance of the Right Sliding Door Wake Up Signal circuit between the BCM C3 connector and the Right Sliding Door Control Module C2 connector. Is the resistance below 5.0 ohms? Yes → Replace the Body Control Module in accordance with the service information. Perform BODY VERIFICATION TEST - VER 1. No → Repair the Right Sliding Door Wake Up Signal wire for an open. Perform BODY VERIFICATION TEST - VER 1.	All

Symptom:

***NO RESPONSE FROM SENTRY KEY REMOTE ENTRY MODULE**

POSSIBLE CAUSES
ATTEMPT TO COMMUNICATE WITH THE BCM
GROUND CIRCUIT OPEN
FUSED IGNITION SWITCH OUTPUT CIRCUIT OPEN
FUSED B(+) CIRCUIT OPEN
OPEN PCI BUS CIRCUIT
SENTRY KEY REMOTE ENTRY MODULE

TEST	ACTION	APPLICABILITY
1	Turn the ignition on. With the DRB, enter Body then Body Computer. Was the DRB able to I/D or communicate with the BCM? Yes → Go To 2 No → Refer to the symptom list for problems related to no communication with the BCM. Perform SKREEM VERIFICATION TEST - VER 1A.	All
2	Turn the ignition off. Disconnect the SKREEM harness connector. Using a 12-volt test light connected to 12-volts, probe the Ground circuit. Is the test light illuminated? Yes → Go To 3 No → Repair the ground circuit for an open. Perform SKREEM VERIFICATION TEST - VER 1A.	All
3	Turn the ignition off. Disconnect the SKREEM harness connector. Turn the ignition on. Using a 12-volt test light connected to ground, probe the Fused Ignition Switch Output circuit. Is the test light illuminated? Yes → Go To 4 No → Repair the Fused Ignition Switch Output circuit for an open. Perform SKREEM VERIFICATION TEST - VER 1A.	All
4	Turn the ignition off. Disconnect the SKREEM harness connector. Using a 12-volt test light connected to ground, probe the Fused B(+) circuit. Is the test light illuminated? Yes → Go To 5 No → Repair the Fused B+ circuit for an open. Perform SKREEM VERIFICATION TEST - VER 1A.	All

*NO RESPONSE FROM SENTRY KEY REMOTE ENTRY MODULE — Continued

TEST	ACTION	APPLICABILITY
5	**Note: Ensure there is PCI Bus communication with other modules on the vehicle before proceeding. If not, refer to the symptom list from the menu and repair as necessary.** Disconnect the SKREEM harness connector. Use Scope input cable CH7058, Cable to Probe adapter CH7062, and the red and black test probes. Connect the scope input cable to the channel one connector on the DRBIII®. Attach the red and black leads and the cable to probe adapter to the scope input cable. With the DRBIII® select Pep Module Tools. Select lab scope. Select Live Data. Select 12 volt square wave. Press F2 for Scope. Press F2 and use the down arrow to set voltage range to 20 volts. Press F2 again when complete. Connect the Black lead to the chassis ground. Connect the Red lead to the PCI Bus circuit in the SKREEM connector. Turn the ignition on. Observe the voltage display on the DRBIII® Lab Scope. Does the voltage pulse from 0 to approximately 7.5 volts? Yes → Go To 6 No → Repair the PCI Bus circuit for an open. Perform SKREEM VERIFICATION TEST - VER 1A.	All
6	If there are no possible causes remaining, view repair. Repair Replace and program the Sentry Key Remote Entry Module in accordance with the Service Information. Perform SKREEM VERIFICATION TEST - VER 1A.	All

Symptom:

***NO RESPONSE FROM THATCHAM ALARM MODULE**

POSSIBLE CAUSES
ATTEMPT TO COMMUNICATE WITH THE BCM
GROUND CIRCUIT OPEN
FUSED IGNITION SWITCH OUTPUT CIRCUIT OPEN
FUSED B+ CIRCUIT OPEN
OPEN PCI BUS CIRCUIT
THATCHAM ALARM MODULE

TEST	ACTION	APPLICABILITY
1	Turn the ignition on. With the DRB, enter Body then Body Computer. Was the DRB able to I/D or communicate with the BCM? Yes → Go To 2 No → Refer to the symptom list for problems related to no communication with the BCM. Perform BODY VERIFICATION TEST - VER 1.	All
2	Turn the ignition off. Disconnect the Thatcham Alarm Module harness connector. Using a 12-volt test light connected to 12-volts, probe the ground circuit. Is the test light illuminated? Yes → Go To 3 No → Repair the Ground circuit for an open. Perform BODY VERIFICATION TEST - VER 1.	All
3	Turn the ignition off. Disconnect the Thatcham Alarm Module harness connector. Turn the ignition on. Using a 12-volt test light connected to ground, probe the Fused Ignition Switch Output circuit. Is the test light illuminated? Yes → Go To 4 No → Repair the Fused Ignition Switch Output circuit for an open or short. Perform BODY VERIFICATION TEST - VER 1.	All
4	Turn the ignition off. Disconnect the Thatcham Alarm Module harness connector. Using a 12-volt test light connected to ground, probe the Fused B+ circuit. Is the test light illuminated? Yes → Go To 5 No → Repair the Fused B+ circuit for an open or short. Perform BODY VERIFICATION TEST - VER 1.	All

*NO RESPONSE FROM THATCHAM ALARM MODULE — Continued

TEST	ACTION	APPLICABILITY
5	**Note: Ensure there is PCI Bus communication with other modules on the vehicle before proceeding. If not, refer to the symptom list from the menu and repair as necessary.** Disconnect the Thatcham Alarm Module harness connector. Use Scope input cable CH7058, Cable to Probe adapter CH7062, and the red and black test probes. Connect the scope input cable to the channel one connector on the DRB. Attach the red and black leads and the cable to probe adapter to the scope input cable. With the DRBIII® select Pep Module Tools. Select lab scope. Select Live Data. Select 12 volt square wave. Press F2 for Scope. Press F2 and use the down arrow to set voltage range to 20 volts. Press F2 again when complete. Connect the Black lead to the chassis ground. Connect the Red lead to the PCI Bus circuit in the Thatcham Alarm Module connector. Turn the ignition on. Observe the voltage display on the DRB Lab Scope. Does the voltage pulse from 0 to approximately 7.5 volts? Yes → Replace the Thatcham Alarm Module in accordance with the service information. Perform BODY VERIFICATION TEST - VER 1. No → Repair the PCI Bus circuit for an open. Perform BODY VERIFICATION TEST - VER 1.	All

Symptom:

*NO RESPONSE FROM TRANSMISSION CONTROL MODULE - EATX (DIESEL)

POSSIBLE CAUSES
NO RESPONSE FROM TRANSMISSION CONTROL MODULE
FCM OUTPUT (RUN/ST) CIRCUIT OPEN
FUSED IGNITION SWITCH OUTPUT (START) CIRCUIT OPEN
FUSED IGNITION SWITCH OUTPUT (START) CIRCUIT SHORT
FUSED B(+) CIRCUIT OPEN
GROUND CIRCUIT(S) OPEN
OPEN PCI BUS CIRCUIT
TRANSMISSION CONTROL MODULE

TEST	ACTION	APPLICABILITY
1	Ignition on, engine not running. **Note: As soon as one or more module communicates with the DRB, answer the question.** With the DRB, attempt to communicate with the Occupant Restraint Controller. With the DRB, attempt to communicate with the Body Control Module (BCM). Was the DRB able to I/D or establish communications with either of the modules? Yes → Go To 2 No → Refer to the Body Communication category and perform the symptom PCI Bus Communication Failure. Perform 41TE TRANSMISSION VERIFICATION TEST - VER 1.	All
2	Turn the ignition off to the lock position. Disconnect the TCM harness connector. Ignition on, engine not running. Using a 12-volt test light connected to ground, probe the FCM Output (Run/St) circuit. **NOTE: The test light must illuminate brightly. Compare the brightness to that of a direct connection to the battery.** Does the test light illuminate brightly? Yes → Go To 3 No → Repair the FCM Output (Run/St) circuit for an open. Refer to the wiring diagrams location in the Service Information. Perform 41TE TRANSMISSION VERIFICATION TEST - VER 1.	All

*NO RESPONSE FROM TRANSMISSION CONTROL MODULE - EATX (DIESEL) — Continued

TEST	ACTION	APPLICABILITY
3	Turn the ignition off to the lock position. Disconnect the TCM harness connector. Remove the starter relay from the IPM. Using a 12-volt test light connected to ground, probe the Fused Ignition Switch Output (Start) circuit. **NOTE: The test light must illuminate brightly. Compare the brightness to that of a direct connection to the battery.** Observe the test light while momentarily turning the ignition switch to the Start position. Does the test light illuminate brightly? Yes → Go To 4 No → Repair the Fused Ignition Switch Output (Start) circuit for an open. Refer to the wiring diagrams located in the Service Information. Perform 41TE TRANSMISSION VERIFICATION TEST - VER 1. **Note: Reinstall the original Starter Relay.**	All
4	Turn the ignition off to the lock position. Disconnect the TCM harness connector. Remove the starter relay from the IPM. With a voltmeter in the millivolt scale, measure the voltage of the Fused Ignition Switch Output (Start) circuit. **NOTE: A no response condition can exist if voltage is present on this circuit with the ignition switch in any position except for the Start position.** **NOTE: Voltage up to .080 millivolts can cause this condition.** **NOTE: Check for after market components that could cause this condition.** Perform this step with the Ignition Switch in every position except for the Start position. Is any voltage present? Yes → Repair the Fused Ignition Switch Output (Start) circuit for a short to voltage. Refer to the wiring diagrams located in the Service Information. Perform 41TE TRANSMISSION VERIFICATION TEST - VER 1. No → Go To 5 **Note: Reinstall the original Starter Relay.**	All
5	Turn the ignition off. Disconnect the TCM harness connector. Using a 12-volt test light connected to ground, check the Fused B(+) circuit. **NOTE: The test light must illuminate brightly. Compare the brightness to that of a direct connection to the battery.** Does the test light illuminate brightly? Yes → Go To 6 No → Repair the Fused B(+) circuit for an open. Refer to the wiring diagrams located in the Service Information. Perform 41TE TRANSMISSION VERIFICATION TEST - VER 1.	All

*NO RESPONSE FROM TRANSMISSION CONTROL MODULE - EATX (DIESEL) — Continued

TEST	ACTION	APPLICABILITY
6	Turn the ignition off to the lock position. Disconnect the TCM harness connector. Using a 12-volt test light connected to 12-volts, check each ground circuit in the TCM harness connector. **NOTE: The test light must illuminate brightly. Compare the brightness to that of a direct connection to the battery.** Does the test light illuminate brightly at all the ground circuits? Yes → Go To 7 No → Repair the Ground circuit(s) for an open. Check the main ground connection to engine block and/or chassis. Refer to the wiring diagrams located in the Service Information. Perform 41TE TRANSMISSION VERIFICATION TEST - VER 1.	All
7	**Note: Ensure there is PCI Bus communication with other modules on the vehicle before proceeding. If not, refer to the symptom list from the menu and repair as necessary.** Disconnect the TCM harness connector. Use Scope input cable CH7058, Cable to Probe adapter CH7062, and the red and black test probes. Connect the scope input cable to the channel one connector on the DRB. Attach the red and black leads and the cable to probe adapter to the scope input cable. With the DRBIII® select Pep Module Tools. Select lab scope. Select Live Data. Select 12 volt square wave. Press F2 for Scope. Press F2 and use the down arrow to set voltage range to 20 volts. Press F2 again when complete. Connect the Black lead to the chassis ground. Connect the Red lead to the PCI Bus circuit in the TCM connector. Turn the ignition on. Observe the voltage display on the DRB Lab Scope. Does the voltage pulse from 0 to approximately 7.5 volts? Yes → Go To 8 No → Repair the PCI Bus circuit for an open. Perform 41TE TRANSMISSION VERIFICATION TEST - VER 1.	All
8	Using the schematics as a guide, inspect the wiring and connectors. Repair as necessary. Pay particular attention to all power and ground circuits. If there are no possible causes remaining, view repair. Repair Replace the Transmission Control Module in accordance with the service information. WITH THE DRBIII® PERFORM QUICK LEARN AND REPROGRAM PINION FACTOR. Perform 41TE TRANSMISSION VERIFICATION TEST - VER 1.	All

Symptom:

*NO RESPONSE FROM TRANSMISSION CONTROL MODULE - NGC

POSSIBLE CAUSES
NO RESPONSE FROM TRANSMISSION CONTROL MODULE
FUSED IGNITION SWITCH OUTPUT CIRCUIT OPEN
FUSED B(+) CIRCUIT OPEN
GROUND CIRCUIT(S) OPEN
PCI BUS CIRCUIT OPEN
POWERTRAIN CONTROL MODULE

TEST	ACTION	APPLICABILITY
1	Turn the ignition on. **Note: As soon as one or more module communicates with the DRB, answer the question.** With the DRB, attempt to communicate with the Instrument Cluster. With the DRB, attempt to communicate with the Occupant Restraint Controller. Was the DRB able to I/D or establish communications with both of the modules? Yes → Go To 2 No → Refer to the Communications category and perform the appropriate symptom. Perform 40/41TE (NGC) TRANSMISSION VERIFICATION TEST - VER 1.	All
2	Turn the ignition off. Disconnect the PCM harness connectors. **CAUTION: DO NOT PROBE THE PCM HARNESS CONNECTORS. PROBING THE PCM HARNESS CONNECTORS WILL DAMAGE THE PCM TERMINALS RESULTING IN POOR TERMINAL TO PIN CONNECTION. INSTALL MILLER SPECIAL TOOL #8815 TO PERFORM DIAGNOSIS.** Turn the ignition on. Using a 12-volt test light connected to ground, probe the Fused Ignition Switch Output circuit and the FCM output (cavs 11 and 12) in the appropriate terminal of special tool #8815. **NOTE: The test light must illuminate brightly. Compare the brightness to that of a direct connection to the battery.** Is the test light illuminated for both circuits? Yes → Go To 3 No → Repair the Fused Ignition Switch Output circuit or the FCM Output circuit for an open. Refer to the wiring diagrams located in the Service Information. Perform 40/41TE (NGC) TRANSMISSION VERIFICATION TEST - VER 1.	All

*NO RESPONSE FROM TRANSMISSION CONTROL MODULE - NGC — Continued

TEST	ACTION	APPLICABILITY
3	Turn the ignition off. Disconnect the PCM harness connectors. **CAUTION: DO NOT PROBE THE PCM HARNESS CONNECTORS. PROBING THE PCM HARNESS CONNECTORS WILL DAMAGE THE PCM TERMINALS RESULTING IN POOR TERMINAL TO PIN CONNECTION. INSTALL MILLER SPECIAL TOOL #8815 TO PERFORM DIAGNOSIS.** Using a 12-volt test light connected to ground, probe the Fused B(+) circuit in the appropriate terminal of special tool #8815. **NOTE: The test light must illuminate brightly. Compare the brightness to that of a direct connection to the battery.** Is the test light illuminated? Yes → Go To 4 No → Repair the Fused B(+) circuit for an open. Refer to the wiring diagrams located in the Service Information. Perform 40/41TE (NGC) TRANSMISSION VERIFICATION TEST - VER 1.	All
4	Turn the ignition off. Disconnect the PCM harness connectors. **CAUTION: DO NOT PROBE THE PCM HARNESS CONNECTORS. PROBING THE PCM HARNESS CONNECTORS WILL DAMAGE THE PCM TERMINALS RESULTING IN POOR TERMINAL TO PIN CONNECTION. INSTALL MILLER SPECIAL TOOL #8815 TO PERFORM DIAGNOSIS.** Using a 12-volt test light connected to 12-volts, probe each ground circuit in the appropriate terminal of special tool #8815. **NOTE: The test light must illuminate brightly. Compare the brightness to that of a direct connection to the battery.** Is the light illuminated at all ground circuits? Yes → Go To 5 No → Repair the Ground circuit(s) for an open. Check the main ground connection to engine block and/or chassis. Refer to the wiring diagrams located in the Service Information. Perform 40/41TE (NGC) TRANSMISSION VERIFICATION TEST - VER 1.	All

*NO RESPONSE FROM TRANSMISSION CONTROL MODULE - NGC — Continued

TEST	ACTION	APPLICABILITY
5	**Note: Ensure there is PCI Bus communication with other modules on the vehicle before proceeding. If not, refer to the symptom list from the menu and repair as necessary.** Disconnect the PCM harness connectors. **CAUTION: DO NOT PROBE THE PCM HARNESS CONNECTORS. PROBING THE PCM HARNESS CONNECTORS WILL DAMAGE THE PCM TERMINALS RESULTING IN POOR TERMINAL TO PIN CONNECTION. INSTALL MILLER SPECIAL TOOL #8815 TO PERFORM DIAGNOSIS.** Use Scope input cable CH7058, Cable to Probe adapter CH7062, and the red and black test probes. Connect the scope input cable to the channel one connector on the DRB. Attach the red and black leads and the cable to probe adapter to the scope input cable. With the DRBIII® select Pep Module Tools. Select lab scope. Select Live Data. Select 12 volt square wave. Press F2 for Scope. Press F2 and use the down arrow to set voltage range to 20 volts. Press F2 again when complete. Connect the Black lead to the chassis ground. Connect the Red lead to the PCI Bus circuit in the appropriate terminal of special tool #8815. Turn the ignition on. Observe the voltage display on the DRB Lab Scope. Does the voltage pulse from 0 to approximately 7.5 volts? Yes → Go To 6 No → Repair the PCI Bus circuit for an open. Perform 40/41TE (NGC) TRANSMISSION VERIFICATION TEST - VER 1.	All
6	Using the schematics as a guide, inspect the wiring and connectors. Repair as necessary. Pay particular attention to all power and ground circuits. If there are no possible causes remaining, view repair. Repair Replace and program the Powertrain Control Module in accordance with the service information. WITH THE DRBIII® PERFORM QUICK LEARN AND REPROGRAM PINION FACTOR. Perform 40/41TE (NGC) TRANSMISSION VERIFICATION TEST - VER 1.	All

Symptom:
*PCI BUS COMMUNICATION FAILURE

POSSIBLE CAUSES
WIRING HARNESS INTERMITTENT
OPEN PCI BUS CIRCUIT AT THE DATA LINK CONNECTOR (DLC)
PCI BUS CIRCUIT SHORTED TO VOLTAGE
MODULE SHORT TO VOLTAGE
PCI BUS CIRCUIT SHORTED TO GROUND
MODULE SHORT TO GROUND

TEST	ACTION	APPLICABILITY
1	**Note: Determine which modules this vehicle is equipped with before beginning.** **Note: When attempting to communicate with any of the modules on this vehicle, the DRB will display 1 of 2 different communication errors: a NO RESPONSE message or a BUS +/- SIGNALS OPEN message.** Turn the ignition on. Using the DRB, attempt to communicate with the following control modules: Airbag Control Module Body Control Module MIC (INSTRUMENT CLUSTER) Was the DRBIII® able to communicate with one or more Module(s)? Yes → Go To 2 No → Go To 3	All
2	Turn the ignition off. **Note: Visually inspect the related wiring harness. Look for any chafed, pierced, pinched, or partially broken wires.** **Note: Visually inspect the related wire harness connectors. Look for broken, bent, pushed out, or corroded terminals.** **Note: If the DRB can not communicate with a single module, refer to the category list for the related symptom.** Were any problems found? Yes → Repair wiring harness/connectors as necessary. Perform BODY VERIFICATION TEST - VER 1. No → Test Complete.	All

*PCI BUS COMMUNICATION FAILURE — Continued

TEST	ACTION	APPLICABILITY
3	Turn the ignition off. Disconnect the PCM/ECM harness connector. Note: If equipped with NGC follow the caution below. **CAUTION: DO NOT PROBE THE PCM HARNESS CONNECTORS. PROBING THE PCM HARNESS CONNECTORS WILL DAMAGE THE PCM TERMINALS RESULTING IN POOR TERMINAL TO PIN CONNECTION. INSTALL MILLER SPECIAL TOOL #8815 TO PERFORM DIAGNOSIS.** Disconnect the DRB from the Data Link Connector (DLC). Disconnect the negative battery cable. Measure the resistance of the PCI Bus circuit between the Data Link Connector (DLC) and the PCM/ECM harness connector. Is the resistance below 5.0 ohms? Yes → Go To 4 No → Repair the PCI Bus circuit for an open. Perform BODY VERIFICATION TEST - VER 1.	All
4	**NOTE: Reconnect the PCM/ECM harness connector and the negative battery cable.** Turn the ignition on. Measure the voltage of the PCI Bus circuit at the Data Link Connector (DLC). Is the voltage above 7.0 volts? Yes → Go To 5 No → Go To 6	All
5	Turn the ignition off. Using a voltmeter, connect one end to the PCI Bus circuit at the DLC, and the other end to ground. **Note: When performing the next step turn the ignition off (wait one minute) before disconnecting any module. When the module is disconnected turn the ignition on to check for a short to voltage.** Turn the ignition on. While monitoring the voltmeter, disconnect each module the vehicle is equipped with one at a time. Is the voltage steadily above 7.0 volts with all the modules disconnected? Yes → Repair the PCI Bus circuit for a short to voltage. Perform BODY VERIFICATION TEST - VER 1. No → Replace the module that when disconnected the short to voltage was eliminated. Perform BODY VERIFICATION TEST - VER 1.	All

*PCI BUS COMMUNICATION FAILURE — Continued

TEST	ACTION	APPLICABILITY
6	Turn the ignition off. Disconnect the negative battery cable. Using a ohmmeter, connect one end to the PCI Bus circuit at the DLC, and the other end to ground. While monitoring the ohmmeter, disconnect each module the vehicle is equipped with one at a time. **NOTE: Total bus resistance to ground thru all of the modules is typically between 350 to 1000 ohms. The more modules on the bus, the lower the total bus resistance will be.** Is the resistance below 150.0 ohms with all the modules disconnected? Yes → Repair the PCI Bus circuit for a short to ground. Perform BODY VERIFICATION TEST - VER 1. No → Replace the module that when disconnected the short to ground was eliminated. Perform BODY VERIFICATION TEST - VER 1.	All

Symptom:

*HOOD AJAR CIRCUIT OPEN (EXPORT ONLY)

POSSIBLE CAUSES
HOOD AJAR SWITCH GROUND CIRCUIT OPEN
INTERMITTENT CONDITION
HOOD AJAR SWITCH
HOOD AJAR SWITCH SENSE CIRCUIT OPEN
BODY CONTROL MODULE INTERNAL MALFUNCTION

TEST	ACTION	APPLICABILITY
1	Open the Hood. With the DRBIII® in Inputs/Outputs, read the HOOD AJAR SW state. Does the DRBIII® display CLOSED? Yes → The condition that caused this symptom is currently not present. Inspect the related wiring harness for a possible intermittent condition. Look for any chafed, pierced, pinched or partially broken wires. Perform BODY VERIFICATION TEST - VER 1. No → Go To 2	All
2	Disconnect the Hood Ajar switch connector. Using a 12-volt Test Light connected to 12-volts, test the Ground circuit for continuity. Does the light illuminate? Yes → Go To 3 No → Repair the Ground circuit for an open. Perform BODY VERIFICATION TEST - VER 1.	All
3	Disconnect the Hood Ajar Switch connector. With the DRBIII® in Inputs/Outputs, read the HOOD AJAR SW state. Connect a jumper wire between Sense circuit and the Ground circuit. Does the DRBIII® display HOOD AJAR SW: CLOSED? Yes → Replace the Hood Ajar Switch. Perform BODY VERIFICATION TEST - VER 1. No → Go To 4	All
4	Disconnect the Body Control Module C3 harness connector. Disconnect the Hood Ajar Switch harness connector. Measure the resistance of the Hood Ajar Switch Sense circuit between the BCM C3 connector and the Hood Ajar Switch connector. Is the resistance below 5.0 ohms? Yes → Replace the Body Control Module. Perform BODY VERIFICATION TEST - VER 1. No → Repair the Hood Ajar Switch Sense circuit for an open. Perform BODY VERIFICATION TEST - VER 1.	All

Symptom:

*HOOD AJAR CIRCUIT SHORTED TO GROUND (EXPORT ONLY)

POSSIBLE CAUSES
HOOD AJAR SWITCH SHORTED TO GROUND
HOOD AJAR SWITCH SENSE CIRCUIT SHORTED TO GROUND
BODY CONTROL MODULE INTERNAL MALFUNCTION

TEST	ACTION	APPLICABILITY
1	With the DRBIII® in Inputs/Outputs, read the HOOD AJAR SW state. Disconnect the Hood Ajar Switch harness connector. With the DRBIII® in Inputs/Outputs, read the HOOD AJAR SW state. Does the Switch State change from CLOSED to OPEN? Yes → Replace the Hood Ajar Switch. Perform BODY VERIFICATION TEST - VER 1. No → Go To 2	All
2	Disconnect the Body Control Module C3 harness connector. Disconnect the Hood Ajar Switch harness connector. Using a 12-volt Test Light connected to 12-volts, test the Sense circuit for a short to ground. Does the Test Light illuminate? Yes → Repair the Hood Ajar Switch Sense circuit for a short to ground. Perform BODY VERIFICATION TEST - VER 1. No → Replace the Body Control Module. Perform BODY VERIFICATION TEST - VER 1.	All

Symptom:

***LEFT FRONT DOOR AJAR SWITCH SENSE CIRCUIT OPEN**

POSSIBLE CAUSES
INTERMITTENT CONDITION
LEFT FRONT DOOR AJAR SWITCH GROUND CIRCUIT OPEN
LEFT FRONT DOOR (LOCK MOTOR) AJAR SWITCH
LEFT FRONT DOOR AJAR SWITCH SENSE CIRCUIT OPEN
BODY CONTROL MODULE INTERNAL MALFUNCTION

TEST	ACTION	APPLICABILITY
1	Open the driver door. With the DRBIII® in Inputs/Outputs, read the DR DOOR AJAR SW state. Does the DRBIII® display CLOSED? Yes → The condition that caused this symptom is currently not present. Inspect the related wiring harness for a possible intermittent condition. Look for any chafed, pierced, pinched or partially broken wires. Perform BODY VERIFICATION TEST - VER 1. No → Go To 2	All
2	Disconnect the Left Front Door (Lock Motor) Ajar Switch harness connector. Using a 12-volt Test Light connected to 12-volts, test the Ground circuit for continuity. Does the light illuminate? Yes → Go To 3 No → Repair the Ground circuit for an open. Perform BODY VERIFICATION TEST - VER 1.	All
3	Disconnect the Left Front Door (Lock Motor) Ajar Switch harness connector. With the DRBIII® in Inputs/Outputs, read the DR DOOR AJAR SW state. Connect a jumper wire between Sense circuit and the Ground circuit. Does the DRBIII® display DR DOOR AJAR SW: CLOSED? Yes → Replace the Left Front Door (Lock Motor) Ajar Switch. Perform BODY VERIFICATION TEST - VER 1. No → Go To 4	All
4	Disconnect the Body Control Module C3 harness connector. Disconnect the Left Front Door (Lock Motor) Ajar Switch harness connector. Measure the resistance of the Sense circuit between the BCM C3 connector and the Door Ajar connector. Is the resistance below 5.0 ohms? Yes → Replace the Body Control Module. Perform BODY VERIFICATION TEST - VER 1. No → Repair the Left Front Door Ajar Switch Sense circuit for an open. Perform BODY VERIFICATION TEST - VER 1.	All

Symptom:

***LEFT FRONT DOOR AJAR SWITCH SENSE CIRCUIT SHORTED TO GROUND**

POSSIBLE CAUSES
LEFT FRONT DOOR (LOCK MOTOR) AJAR SWITCH SHORTED TO GROUND
LEFT FRONT DOOR AJAR SWITCH SENSE CIRCUIT SHORTED TO GROUND
BODY CONTROL MODULE INTERNAL MALFUNCTION

TEST	ACTION	APPLICABILITY
1	With the DRBIII® in Inputs/Outputs, read the DR DOOR AJAR SW state. Disconnect the Left Front Door (Lock Motor) Ajar Switch harness connector. With the DRBIII® in Inputs/Outputs, read the DR DOOR AJAR SW state. Did the Switch State change from CLOSED to OPEN? Yes → Replace the Left Front Door (Lock Motor) Ajar Switch. Perform BODY VERIFICATION TEST - VER 1. No → Go To 2	All
2	Disconnect the Body Control Module C3 harness connector. Disconnect the Left Front Door (Lock Motor) Ajar Switch harness connector. Using a 12-volt Test Light connected to 12-volts, test the Sense circuit for a short to ground. Does the Test Light illuminate? Yes → Repair the Left Front Door Ajar Switch Sense circuit for a short to ground. Perform BODY VERIFICATION TEST - VER 1. No → Replace the Body Control Module. Perform BODY VERIFICATION TEST - VER 1.	All

Symptom:

***LEFT SLIDING DOOR AJAR SWITCH SENSE CIRCUIT OPEN**

POSSIBLE CAUSES
GROUND CIRCUIT OPEN
LEFT SLIDING DOOR AJAR SWITCH SENSE CIRCUIT OPEN
LEFT SLIDING DOOR AJAR SWITCH SENSE CIRCUIT OPEN
BODY CONTROL MODULE INTERNAL MALFUNCTION
LEFT SLIDING DOOR LOCK MOTOR/AJAR SWITCH (LATCH ASSY).

TEST	ACTION	APPLICABILITY
1	Disconnect the Left Sliding Door harness connector at the bottom of the door. Connect a jumper wire between the Left Sliding Door Ajar Switch Sense circuit and ground. With the DRBIII® in Inputs/Outputs, read the LSLIDE DR AJAR SW state. Did the Switch State change from OPEN to CLOSED? Yes → Go To 2 No → Go To 4	All
2	Reconnect the Left Sliding Door Lock Motor/Ajar Switch connector at the bottom of the door. Remove the door panel from the sliding door. Disconnect the Left Sliding Door Lock Motor/Ajar or Latch Sensing Switch connector at the door mechanism. Connect a jumper wire between the Left Sliding Door Ajar Switch Sense circuit and ground. With the DRBIII® in Inputs/Outputs, read the LSLIDE DR AJAR SW state. Did the Switch State change from OPEN to CLOSED? Yes → Go To 3 No → Repair the Left Sliding Door Lock Motor/Ajar Switch harness for an open between the door mechanism and the intermediate harness connector at the bottom of the door. Perform BODY VERIFICATION TEST - VER 1.	All
3	Disconnect the Left Sliding Door Lock Motor/Ajar Switch connector at the door mechanism. Connect a jumper wire between the Left Sliding Door Ajar Switch Sense circuit and the Ground circuit. With the DRBIII® in Inputs/Outputs, read the LSLIDE DR AJAR SW state. Did the Switch State change from OPEN to CLOSED? Yes → Replace the Sliding Door Lock Motor/Ajar Switch (or Latch Sensing Switch).. Perform BODY VERIFICATION TEST - VER 1. No → Repair the Ground circuit for an open. Perform BODY VERIFICATION TEST - VER 1.	All

*LEFT SLIDING DOOR AJAR SWITCH SENSE CIRCUIT OPEN — Continued

TEST	ACTION	APPLICABILITY
4	Disconnect the Left Sliding Door Lock Motor/Ajar or Latch Sensing Switch harness connector at the bottom of the sliding door. Disconnect the BCM C3 connector. Back probe a jumper wire from the Left Sliding Door Ajar Switch Sense circuit at the BCM to ground. Measure the resistance of the Left Sliding Door Ajar Switch Sense circuit between the BCM C3 connector and the Sliding Door intermediate connector. Is the resistance below 5.0 ohms? No → Repair the Left Sliding Door Ajar Switch Sense circuit for an open between the intermediate connector and the Body Control Module. Perform BODY VERIFICATION TEST - VER 1. Yes → Replace the Body Control Module. Perform BODY VERIFICATION TEST - VER 1.	All

Symptom:

***LEFT SLIDING DOOR AJAR SWITCH SENSE CIRCUIT SHORTED TO GROUND**

POSSIBLE CAUSES
LEFT SLIDING DOOR LOCK MOTOR/AJAR SWITCH SHORTED TO GROUND
LEFT SLIDING DOOR AJAR SWITCH SENSE CIRCUIT SHORTED TO GROUND
BODY CONTROL MODULE INTERNAL MALFUNCTION
LEFT SLIDING DOOR LOCK MOTOR/AJAR SWITCH (LATCH ASSY).

TEST	ACTION	APPLICABILITY
1	With the DRBIII® in Inputs/Outputs, read the LSLIDE DR AJAR SW state. Disconnect the Left Sliding Door harness connector at the bottom of the door. With the DRBIII® in Inputs/Outputs, read the LSLIDE DR AJAR SW state. Did the Switch State change from CLOSED to OPEN? Yes → Go To 2 No → Go To 3	All
2	Reconnect the Left Sliding Door harness connector at the bottom of the door. Remove the door panel from the sliding door. Disconnect the Left Sliding Door Lock Motor/Ajar or Latch Sensing Switch connector at the door mechanism. With the DRBIII® in Inputs/Outputs, read the LSLIDE DR AJAR SW state. Did the Switch State change from CLOSED to OPEN? Yes → Replace the Sliding Door Lock Motor/Ajar Switch or Latch Assembly. Perform BODY VERIFICATION TEST - VER 1. No → Repair the Left Sliding Door Lock Motor/Ajar Switch harness for a short to ground between the door mechanism and the intermediate harness connector at the bottom of the door. Perform BODY VERIFICATION TEST - VER 1.	All
3	Disconnect the Body Control Module C3 harness connector. Disconnect the Left Sliding Door harness connector at the bottom of the sliding door. Using a 12-volt Test Light connected to 12-volts, test the Sense circuit for a short to ground. Does the Test Light illuminate? Yes → Repair the Left Sliding Door Ajar Switch Sense circuit for a short to ground. Perform BODY VERIFICATION TEST - VER 1. No → Replace the Body Control Module. Perform BODY VERIFICATION TEST - VER 1.	All

Symptom:
*LIFTGATE AJAR CIRCUIT OPEN

POSSIBLE CAUSES
INTERMITTENT CONDITION
LIFTGATE AJAR SWITCH GROUND CIRCUIT OPEN
LIFTGATE AJAR SWITCH (CINCH/RELEASE MOTOR)
LIFTGATE AJAR SWITCH SENSE CIRCUIT OPEN
BODY CONTROL MODULE INTERNAL MALFUNCTION

TEST	ACTION	APPLICABILITY
1	Open the Liftgate. With the DRBIII® in Inputs/Outputs, read the LIFTGATE AJAR SW state. Does the DRBIII® display CLOSED? Yes → The condition that caused this symptom is currently not present. Inspect the related wiring harness for a possible intermittent condition. Look for any chafed, pierced, pinched or partially broken wires. Perform BODY VERIFICATION TEST - VER 1. No → Go To 2	All
2	**NOTE: If Power Liftgate equipped the ajar switch is in the Liftgate Cinch/ Release Motor.** Disconnect the Liftgate Ajar switch connector. Using a 12-volt Test Light connected to 12-volts, test the Ground circuit for continuity. Does the light illuminate? Yes → Go To 3 No → Repair the Ground circuit for an open. Perform BODY VERIFICATION TEST - VER 1.	All
3	Disconnect the Liftgate Ajar Switch connector. With the DRBIII® in Inputs/Outputs, read the LIFTGATE AJAR SW state. Connect a jumper wire between Sense circuit and the Ground circuit. Does the DRBIII® display LIFTGATE AJAR SW: CLOSED? Yes → Replace the Liftgate Ajar Switch or Cinch/Release Motor (Latch). Perform BODY VERIFICATION TEST - VER 1. No → Go To 4	All
4	Disconnect the Body Control Module C3 harness connector. Disconnect the Liftgate Ajar Switch harness connector. Measure the resistance of the Sense circuit between the BCM C3 connector and the Liftgate Ajar Switch connector.. Is the resistance below 5.0 ohms? Yes → Replace the Body Control Module. Perform BODY VERIFICATION TEST - VER 1. No → Repair the Liftgate Ajar Switch Sense circuit for an open. Perform BODY VERIFICATION TEST - VER 1.	All

Symptom:

*LIFTGATE AJAR CIRCUIT SHORTED TO GROUND

POSSIBLE CAUSES
LIFTGATE AJAR SWITCH SHORTED TO GROUND
LIFTGATE AJAR SWITCH SENSE CIRCUIT SHORTED TO GROUND
BODY CONTROL MODULE INTERNAL MALFUNCTION

TEST	ACTION	APPLICABILITY
1	With the DRBIII® in Inputs/Outputs, read the LIFTGATE AJAR SW state. **NOTE: If Power Liftgate equipped the ajar switch is in the Liftgate Cinch/ Release Motor.** Disconnect the Liftgate Ajar Switch harness connector. With the DRBIII® in Inputs/Outputs, read the LIFTGATE AJAR SW state. Does the Switch State change from CLOSED to OPEN? Yes → Replace the Liftgate Ajar Switch or Latch Assembly. Perform BODY VERIFICATION TEST - VER 1. No → Go To 2	All
2	Disconnect the Body Control Module C3 harness connector. Disconnect the Liftgate Ajar Switch harness connector. Using a 12-volt Test Light connected to 12-volts, test the Sense circuit for a short to ground. Does the Test Light illuminate? Yes → Repair the Liftgate Ajar Switch Sense circuit for a short to ground. Perform BODY VERIFICATION TEST - VER 1. No → Replace the Body Control Module. Perform BODY VERIFICATION TEST - VER 1.	All

Symptom:

***RIGHT FRONT DOOR AJAR SWITCH SENSE CIRCUIT OPEN**

POSSIBLE CAUSES
INTERMITTENT CONDITION
RIGHT FRONT DOOR AJAR SWITCH GROUND CIRCUIT OPEN
RIGHT FRONT DOOR (LOCK MOTOR) AJAR SWITCH
RIGHT FRONT DOOR AJAR SWITCH SENSE CIRCUIT OPEN
BODY CONTROL MODULE INTERNAL MALFUNCTION

TEST	ACTION	APPLICABILITY
1	Open the passenger door. With the DRBIII® in Inputs/Outputs, read the PASS DOOR AJAR SW state. Does the DRBIII® display CLOSED? Yes → The condition that caused this symptom is currently not present. Inspect the related wiring harness for a possible intermittent condition. Look for any chafed, pierced, pinched or partially broken wires. Perform BODY VERIFICATION TEST - VER 1. No → Go To 2	All
2	Disconnect the Right Front Door (Lock Motor) Ajar Switch harness connector. Using a 12-volt Test Light connected to 12-volts, test the Ground circuit for continuity. Does the light illuminate? Yes → Go To 3 No → Repair the Ground circuit for an open. Perform BODY VERIFICATION TEST - VER 1.	All
3	Disconnect the Right Front Door (Lock Motor) Ajar Switch harness connector. With the DRBIII® in Inputs/Outputs, read the PASS DOOR AJAR SW state. Connect a jumper wire between Sense circuit and the Ground circuit. Does the DRBIII® display PASS DOOR AJAR SW: CLOSED? Yes → Replace the Right Front Door (Lock Motor) Ajar Switch. Perform BODY VERIFICATION TEST - VER 1. No → Go To 4	All
4	Disconnect the Body Control Module C3 harness connector. Disconnect the Right Front Door (Lock Motor) Ajar Switch harness connector. Measure the resistance of the Sense circuit between the BCM C3 connector and the Door Ajar connector. Is the resistance below 5.0 ohms? Yes → Replace the Body Control Module. Perform BODY VERIFICATION TEST - VER 1. No → Repair the Right Front Door Ajar Switch Sense circuit for an open. Perform BODY VERIFICATION TEST - VER 1.	All

Symptom:

***RIGHT FRONT DOOR AJAR SWITCH SENSE CIRCUIT SHORTED TO GROUND**

POSSIBLE CAUSES
RIGHT FRONT DOOR (LOCK MOTOR) AJAR SWITCH SHORTED TO GROUND
RIGHT FRONT DOOR AJAR SWITCH SENSE CIRCUIT SHORTED TO GROUND
BODY CONTROL MODULE INTERNAL MALFUNCTION

TEST	ACTION	APPLICABILITY
1	With the DRBIII® in Inputs/Outputs, read the PASS DOOR AJAR SW state. Disconnect the Right Front Door (Lock Motor) Ajar Switch harness connector. With the DRBIII® in Inputs/Outputs, read the PASS DOOR AJAR SW state. Did the Switch State change from CLOSED to OPEN? Yes → Replace the Right Front Door (Lock Motor) Ajar Switch. Perform BODY VERIFICATION TEST - VER 1. No → Go To 2	All
2	Disconnect the Body Control Module C3 harness connector. Disconnect the Right Front Door (Lock Motor) Ajar Switch harness connector. Using a 12-volt Test Light connected to 12-volts, test the Sense circuit for a short to ground. Does the Test Light illuminate? Yes → Repair the Right Front Door Ajar Switch Sense circuit for a short to ground. Perform BODY VERIFICATION TEST - VER 1. No → Replace the Body Control Module. Perform BODY VERIFICATION TEST - VER 1.	All

Symptom:

***RIGHT SLIDING DOOR AJAR CIRCUIT OPEN**

POSSIBLE CAUSES
GROUND CIRCUIT OPEN
RIGHT SLIDING DOOR AJAR SWITCH SENSE CIRCUIT OPEN
RIGHT SLIDING DOOR AJAR SWITCH SENSE CIRCUIT OPEN
BODY CONTROL MODULE INTERNAL MALFUNCTION
RIGHT SLIDING DOOR LOCK MOTOR/AJAR SWITCH (LATCH ASSY)

TEST	ACTION	APPLICABILITY
1	Disconnect the Right Sliding Door harness connector at the bottom of the door. Connect a jumper wire between the Right Sliding Door Ajar Switch Sense circuit and ground. With the DRBIII® in Inputs/Outputs, read the RSLIDE DR AJAR SW state. Did the Switch State change from OPEN to CLOSED? Yes → Go To 2 No → Go To 4	All
2	Reconnect the Right Sliding Door harness connector at the bottom of the door. Remove the door panel from the sliding door. Disconnect the Right Sliding Door Lock Motor/Ajar Switch (Latch Assy) connector at the door mechanism. Connect a jumper wire between the Right Sliding Door Ajar Switch Sense circuit and ground. With the DRBIII® in Inputs/Outputs, read the RSLIDE DR AJAR SW state. Did the Switch State change from OPEN to CLOSED? Yes → Go To 3 No → Repair the Right Sliding Door Lock Motor/Ajar Switch harness for an open between the door mechanism and the intermediate harness connector at the bottom of the door. Perform BODY VERIFICATION TEST - VER 1.	All
3	Disconnect the Right Sliding Door Lock Motor/Ajar Switch connector at the door mechanism. Connect a jumper wire between the Right Sliding Door Ajar Switch Sense circuit and the Ground circuit. With the DRBIII® in Inputs/Outputs, read the RSLIDE DR AJAR SW state. Did the Switch State change from OPEN to CLOSED? Yes → Replace the Sliding Door Lock Motor/Ajar Switch or Latch Assembly. Perform BODY VERIFICATION TEST - VER 1. No → Repair the Ground circuit for an open. Perform BODY VERIFICATION TEST - VER 1.	All

*RIGHT SLIDING DOOR AJAR CIRCUIT OPEN — Continued

TEST	ACTION	APPLICABILITY
4	Disconnect the Right Sliding Door harness connector at the bottom of the sliding door. Disconnect the BCM C3 connector. Back probe a jumper wire from the Right Sliding Door Ajar Switch Sense circuit at the BCM to ground. Measure the resistance of the Right Sliding Door Ajar Switch Sense circuit between the BCM C3 connector and the Sliding Door harness intermediate connector. Is the resistance below 5.0 ohms? No → Repair the Right Sliding Door Ajar Switch Sense circuit for an open between the intermediate connector and the Body Control Module. Perform BODY VERIFICATION TEST - VER 1. Yes → Replace the Body Control Module. Perform BODY VERIFICATION TEST - VER 1.	All

Symptom:

***RIGHT SLIDING DOOR AJAR CIRCUIT SHORTED TO GROUND**

POSSIBLE CAUSES
RIGHT SLIDING DOOR LOCK MOTOR/AJAR SWITCH SHORTED TO GROUND
RIGHT SLIDING DOOR AJAR SWITCH SENSE CIRCUIT SHORTED TO GROUND
BODY CONTROL MODULE INTERNAL MALFUNCTION
RIGHT SLIDING DOOR LOCK MOTOR/AJAR SWITCH (LATCH ASSY)

TEST	ACTION	APPLICABILITY
1	With the DRBIII® in Inputs/Outputs, read the RSLIDE DR AJAR SW state. Disconnect the Right Sliding Door harness connector at the bottom of the door. With the DRBIII® in Inputs/Outputs, read the RSLIDE DR AJAR SW state. Did the Switch State change from CLOSED to OPEN? Yes → Go To 2 No → Go To 3	All
2	Reconnect the Right Sliding Door harness connector at the bottom of the door. Remove the door panel from the sliding door. Disconnect the Right Sliding Door Lock Motor/Ajar Switch (Latch Assy) connector at the door mechanism. With the DRBIII® in Inputs/Outputs, read the RSLIDE DR AJAR SW state. Did the Switch State change from CLOSED to OPEN? Yes → Replace the Sliding Door Lock Motor/Ajar Switch or Latch Assembly. Perform BODY VERIFICATION TEST - VER 1. No → Repair the Right Sliding Door Lock Motor/Ajar Switch harness for a short to ground between the door mechanism and the intermediate harness connector at the bottom of the door. Perform BODY VERIFICATION TEST - VER 1.	All
3	Disconnect the Body Control Module C3 harness connector. Disconnect the Right Sliding Door harness connector at the bottom of the sliding door. Using a 12-volt Test Light connected to 12-volts, test the Sense circuit for a short to ground. Does the Test Light illuminate? Yes → Repair the Right Sliding Door Ajar Switch Sense circuit for a short to ground. Perform BODY VERIFICATION TEST - VER 1. No → Replace the Body Control Module. Perform BODY VERIFICATION TEST - VER 1.	All

Symptom:
EBL RUN ONLY RELAY OPEN

When Monitored and Set Condition:

EBL RUN ONLY RELAY OPEN

When Monitored: Continuously with the ignition on.

Set Condition: The FCM has detected an open in the Defogger Relay Control circuit.

POSSIBLE CAUSES
OPEN B+ TO RELAY
VERIFY ACTIVE DTC
MISSING RELAY
FRONT CONTROL MODULE
DEFOGGER RELAY
INTELLIGENT POWER MODULE

TEST	ACTION	APPLICABILITY
1	Turn the ignition on. With the DRBIII®, erase the current Front Control Module DTC's. Turn the ignition off, wait 10 seconds then turn the ignition on. With the DRBIII®, read the current Front Control Module DTC's. Does the DRBIII® display EBL RUN ONLY RELAY OPEN trouble code? Yes → Go To 2 No → The condition that caused this symptom is currently not present at this time. Perform BODY VERIFICATION TEST - VER 1.	All
2	Turn the ignition off. Check the IPM to make certain the Defogger Relay is present. Is the Defogger Relay present? Yes → Go To 3 No → Replace the missing Defogger Relay. Perform BODY VERIFICATION TEST - VER 1.	All
3	Remove the Defogger Relay from the IPM. Measure the voltage of pin 86 in the Defogger Relay socket. Is the voltage above 10.0 volts? Yes → Go To 4 No → Repair/replace open B+ to relay as necessary. Perform BODY VERIFICATION TEST - VER 1.	All

EBL RUN ONLY RELAY OPEN — Continued

TEST	ACTION	APPLICABILITY
4	Turn the ignition off. Install a known good relay in place of the Defogger Relay. Turn the ignition on. Attempt to operate the rear window defogger. With the DRBIII®, read the current Front Control Module DTC's. Does the DTC reset? Yes → Go To 5 No → Replace the Defogger Relay. Perform BODY VERIFICATION TEST - VER 1.	All
5	Turn the ignition off. Disconnect the Front Control Module from the Fuse and Relay Center. Remove the Defogger Relay. Measure the resistance of the Defogger Relay Control circuit in the Fuse and Relay Center. Is the resistance below 5.0 ohms? Yes → Replace the Front Control Module. Perform BODY VERIFICATION TEST - VER 1. No → Replace the Fuse and Relay Center. Perform BODY VERIFICATION TEST - VER 1.	All

Symptom:
EBL RUN ONLY RELAY SHORTED TO BATTERY

When Monitored and Set Condition:

EBL RUN ONLY RELAY SHORTED TO BATTERY

When Monitored: Continuously with the ignition on.

Set Condition: The FCM has detected a short to battery voltage in the Defogger Relay Control circuit.

POSSIBLE CAUSES
VERIFY ACTIVE DTC
FRONT CONTROL MODULE
INTELLIGENT POWER MODULE
DEFOGGER RELAY

TEST	ACTION	APPLICABILITY
1	Turn the ignition on. With the DRBIII®, erase the current Front Control Module DTC's. Turn the ignition off, wait 10 seconds then turn the ignition on. With the DRBIII®, read the current Front Control Module DTC's. Does the DRBIII® display EBL RUN ONLY RELAY SHORTED TO BATTERY trouble code? Yes → Go To 2 No → The condition that caused this symptom is currently not present at this time. Perform BODY VERIFICATION TEST - VER 1.	All
2	Turn the ignition off. Install a known good relay in place of the Defogger Relay. Turn the ignition on. Attempt to operate the Rear Window Defogger. With the DRBIII®, read the current Front Control Module DTCs. Did the DTC reset? Yes → Go To 3 No → Replace the Defogger Relay. Perform BODY VERIFICATION TEST - VER 1.	All
3	Turn the ignition off. Remove the Defogger Relay from the IPM. Remove the Front Control Module from the IPM. Measure the voltage of the Defogger Relay Control circuit. Is the voltage above 1.0 volts? Yes → Replace the Fuse and Relay Center. Perform BODY VERIFICATION TEST - VER 1. No → Replace the Front Control Module. Perform BODY VERIFICATION TEST - VER 1.	All

Symptom:
BACKUP LAMP OUTPUT OPEN

When Monitored and Set Condition:

BACKUP LAMP OUTPUT OPEN

When Monitored: Trans in reverse.

Set Condition: Voltage output status is Low.

POSSIBLE CAUSES
INTERMITTENT CONDITION
GROUND CIRCUIT
BACKUP LAMP OPEN
BACKUP LAMP DRIVER CIRCUIT OPEN
BODY CONTROL MODULE

TEST	ACTION	APPLICABILITY
1	Turn the ignition on. With the DRBIII®, clear all BCM, IPM DTC's. Actuate the Backup Lamps. With the DRBIII®, read the DTC information. Does the DRBIII® read: Backup Lamp Output Open? Yes → Go To 2 No → The condition that caused the symptom is currently not present. Inspect the related wiring for a possible intermittent condition. Look for terminal push out or any chafed, pierced, pinched, or partially broken wires. Perform BODY VERIFICATION TEST - VER 1.	All
2	Turn the ignition off Disconnect the inoperative rear tail lamp harness connector. Using a 12-volt test light connected to 12-volts, check the ground circuit. Does the test light illuminate brightly? Yes → Go To 3 No → Repair the Ground Circuit. Perform BODY VERIFICATION TEST - VER 1.	All

BACKUP LAMP OUTPUT OPEN — Continued

TEST	ACTION	APPLICABILITY
3	Turn the ignition off. Disconnect the inoperative rear tail lamp harness connector. Turn the ignition on. Engage the transmission to reverse. Using a 12-volt test light connected to ground, check the Backup Lamps Output circuit. Does the test light illuminate brightly? Yes → Replace the applicable Backup Lamp. Perform BODY VERIFICATION TEST - VER 1. No → Go To 4	All
4	Turn the ignition off. Disconnect the applicable Body Control Module harness connector. Disconnect the inoperative rear tail lamp harness connector. Measure the resistance of the Backup Lamp Driver Circuit. Is the resistance above 5.0 ohms? Yes → Repair the Backup Lamp Driver Circuit for an open condition. Perform BODY VERIFICATION TEST - VER 1. No → Replace the Body Control Module. Perform BODY VERIFICATION TEST - VER 1.	All

Symptom:
BACKUP LAMP OUTPUT SHORT

When Monitored and Set Condition:

BACKUP LAMP OUTPUT SHORT

When Monitored: With the transmission in reverse.

Set Condition: When voltage output status is Low.

POSSIBLE CAUSES
INTERMITTENT CONDITION
BACKUP LAMP
BACKUP LAMP DRIVER CIRCUIT SHORT TO GROUND
BODY CONTROL MODULE

TEST	ACTION	APPLICABILITY
1	Turn the ignition on. With the DRBIII®, clear all BCM DTC's. Place the transmission in reverse. With the DRBIII®, read the DTC information. Does the DRBIII® read: Backup Lamp Output Short? Yes → Go To 2 No → The condition that caused the symptom is currently not present. Inspect the related wiring for a possible intermittent condition. Look for any chafed, pierced,pinched, or partially broken wires. Perform BODY VERIFICATION TEST - VER 1.	All
2	Turn the ignition on. Place the transmission in reverse. Using a 12-volt test light connected to ground, check the Backup Lamp Output circuit. Does the test light illuminate brightly? Yes → Replace the Backup Lamp. Perform BODY VERIFICATION TEST - VER 1. No → Go To 3	All
3	Turn the ignition off. Disconnect the applicable Body Control Module harness connector. Disconnect both rear tail lamp harness connector. Measure the resistance of the Backup Lamp Driver circuit and ground. Is the resistance below 5.0 ohms? Yes → Repair the Backup Lamp Driver circuit for a short to ground. Perform BODY VERIFICATION TEST - VER 1. No → Replace the Body Control Module. Perform BODY VERIFICATION TEST - VER 1.	All

Symptom:
FRONT FOG LAMP RELAY OPEN

When Monitored and Set Condition:

FRONT FOG LAMP RELAY OPEN

When Monitored: Ignition On.

Set Condition: The IPM detects high current from the fog lamp relay control circuit.

POSSIBLE CAUSES
MISSING RELAY
OPEN FUSE
FOG LAMP RELAY
INTERMITTENT CONDITION
FOG LAMP RELAY CONTROL CIRCUIT OPEN
FRONT CONTROL MODULE
INTELLIGENT POWER MODULE

TEST	ACTION	APPLICABILITY
1	Turn the ignition on. With the DRBIII®, clear all IPM DTC's. Turn the Fog Lamps on. With the DRBIII®, read the DTC information. Does the DRBIII® read: Front Fog Lamp Relay Open? Yes → Go To 2 No → Go To 5	All
2	Turn the ignition off. Check the IPM to make certain the Fog Lamp Relay is present. Is the Fog Lamp Relay present? Yes → Go To 3 No → Replace the missing Fog Lamp Relay. Perform BODY VERIFICATION TEST - VER 1.	All
3	Turn the ignition off. Install a known good relay in place of the fog lamp relay. Turn the Fog Lamps On. Do the Fog Lamps operate normally? Yes → Replace the Fog Lamp Relay. Perform BODY VERIFICATION TEST - VER 1. No → Go To 4	All

FRONT FOG LAMP RELAY OPEN — Continued

TEST	ACTION	APPLICABILITY
4	Turn the ignition off Remove the Fog Lamp Relay. Measure the voltage of the Fused B+ circuit of the fog lamp relay. Is the voltage above 10 volts? Yes → Replace the Front Control Module. Perform BODY VERIFICATION TEST - VER 1. No → Replace the Intelligent Power Module. Perform BODY VERIFICATION TEST - VER 1.	All
5	Turn the ignition off. Check the IPM Fog Lamp fuse #1. Is the fuse open? Yes → Replace the open fuse. Perform BODY VERIFICATION TEST - VER 1. No → Go To 6	All
6	Turn the ignition off. Disconnect the Front Control Module from the IPM. Remove the Fog Lamp Relay. Measure the resistance of the Fog Lamp Relay Control Circuit. Is the resistance below 5.0 ohms? Yes → The condition that caused the symptom is currently not present. Inspect the related wiring for a possible intermittent condition. Look for any chafed, pierced,pinched, or partially broken wires. Perform BODY VERIFICATION TEST - VER 1. No → Repair the Fog Lamp Relay Control Circuit. Perform BODY VERIFICATION TEST - VER 1.	All

Symptom:
FRONT FOG LAMP SHORTED TO BATTERY

When Monitored and Set Condition:

FRONT FOG LAMP SHORTED TO BATTERY

When Monitored: Ignition On.

Set Condition: When a battery fault condition is present.

POSSIBLE CAUSES
INTERMITTENT CONDITION
FOG LAMP RELAY
FRONT CONTROL MODULE
INTELLIGENT POWER MODULE

TEST	ACTION	APPLICABILITY
1	Turn the ignition on. With the DRBIII®, clear all IPM DTC's. Turn the Fog Lamps on. With the DRBIII®, read the DTC information. Does the DRBIII® read: Front Fog Lamp Shorted To Battery? Yes → Go To 2 No → The condition that caused the symptom is currently not present. Inspect the related wiring for a possible intermittent condition. Look for any chafed, pierced,pinched, or partially broken wires. Perform BODY VERIFICATION TEST - VER 1.	All
2	Turn the ignition off. Remove and install a known good relay in place of the Fog Lamp Relay. Do the Fog Lamps operate normally? Yes → Replace the Fog Lamp Relay. Perform BODY VERIFICATION TEST - VER 1. No → Go To 3	All
3	Turn the ignition off. Remove the Fog Lamp Relay from the IPM. Remove the Front Control Module from the IPM. Measure the voltage of the Fog Lamp Relay Control circuit and ground. Is the voltage above 1.0 volts? Yes → Replace the Intelligent Power Module. Perform BODY VERIFICATION TEST - VER 1. No → Replace the Front Control Module. Perform BODY VERIFICATION TEST - VER 1.	All

Symptom:
HEADLAMP SWITCH MISMATCH

When Monitored and Set Condition:

HEADLAMP SWITCH MISMATCH

When Monitored: Ignition ON

Set Condition: Headlamp switch is in Auto mode and the vehicle is not EC Mirror equipped.

POSSIBLE CAUSES
VERIFY AUTO HEADLAMP SWITCH
INTERMITTENT WIRING AND CONNECTORS
BODY CONTROL MODULE

TEST	ACTION	APPLICABILITY
1	Turn the ignition on. With the DRBIII®, record and erase DTC's. Turn the headlamps to the Auto position. With the DRBIII®, read DTCs. Does the DRBIII® display HEADLAMP SWITCH MISMATCH? Yes → Go To 2 No → Go To 4	All
2	Inspect the vehicles side view mirrors. Is this vehicle equipped with Electro chromatic mirrors? Yes → Go To 3 No → Replace the Auto Headlamp Switch with a non Auto Headlamp Switch. Perform BODY VERIFICATION TEST - VER 1.	All
3	If there are no possible causes remaining, view repair. Repair Replace and program the Body Control Module in accordance with the Service Information. Perform BODY VERIFICATION TEST - VER 1.	All
4	The conditions necessary to set this DTC are not present at this time. Using the schematics as a guide, inspect the wiring and connectors specific to this circuit. Wiggle the wiring while checking for shorts and open circuits. Were there any problems found? Yes → Repair as necessary. Perform BODY VERIFICATION TEST - VER 1. No → Test Complete.	All

Symptom:
HEADLAMP SWITCH OPEN

When Monitored and Set Condition:

HEADLAMP SWITCH OPEN

When Monitored: Ignition ON

Set Condition: A Sensor voltage is over 4.8 volts for more than .0625 seconds.

POSSIBLE CAUSES
INTERMITTENT WIRING AND CONNECTORS
HEADLAMP SWITCH MUX CIRCUIT OPEN
HEADLAMP SWITCH MUX RETURN CIRCUIT OPEN
HEADLAMP SWITCH OPEN
BODY CONTROL MODULE

TEST	ACTION	APPLICABILITY
1	Turn the ignition on. With the DRBIII®, record and erase DTC's. Turn the headlamps to the ON position. With the DRBIII®, read DTCs. Does the DRBIII® display HEADLAMP SWITCH OPEN? Yes → Go To 2 No → Go To 5	All
2	Turn the ignition off. Disconnect the Headlamp Switch harness connector. Connect a jumper wire between the Headlamp Switch MUX circuit and the Headlamp Switch MUX Return circuit in the Headlamp Switch harness connector. Turn the ignition on. With the DRBIII®, select Body, Body Controller and read the Headlamp Switch volts. Does the DRBIII® Headlamp Switch Sensor voltage read less than 0.5 Volts? Yes → Replace the Headlamp Switch in accordance with the Service Information. Perform BODY VERIFICATION TEST - VER 1. No → Go To 3	All

HEADLAMP SWITCH OPEN — Continued

TEST	ACTION	APPLICABILITY
3	Turn the ignition off to the lock position. Disconnect the applicable Body Control Module harness connector. Disconnect the Headlamp Switch harness connector. **Note: Check connectors - Clean/repair as necessary.** Measure the resistance of the Headlamp Switch MUX circuit from the Body Control Module connector to the Headlamp Switch harness connector. Is the resistance above 5.0 ohms? Yes → Repair the Headlamp Switch MUX circuit for an open. Perform BODY VERIFICATION TEST - VER 1. No → Go To 4	All
4	Turn the ignition off to the lock position. Disconnect the applicable Body Control Module harness connector. Disconnect the Headlamp Switch harness connector. **Note: Check connectors - Clean/repair as necessary.** Measure the resistance of the Headlamp Switch MUX Return circuit from the Body Control Module connector to the Headlamp Switch harness connector. Is the resistance above 5.0 ohms? Yes → Repair the Headlamp Switch MUX Return circuit for an open. Perform BODY VERIFICATION TEST - VER 1. No → Replace the Body Control Module in accordance with the Service Information. Perform BODY VERIFICATION TEST - VER 1.	All
5	The conditions necessary to set this DTC are not present at this time. Using the schematics as a guide, inspect the wiring and connectors specific to this circuit. Wiggle the wiring while checking for shorts and open circuits. Were there any problems found? Yes → Repair as necessary. Perform BODY VERIFICATION TEST - VER 1. No → Test Complete.	All

Symptom:
HEADLAMP SWITCH SHORT TO GROUND

When Monitored and Set Condition:

HEADLAMP SWITCH SHORT TO GROUND

When Monitored: Ignition ON

Set Condition: A Sensor voltage is below 0.488 volts for more than 0.0625 seconds.

POSSIBLE CAUSES
HEADLAMP SWITCH SHORTED
INTERMITTENT WIRING AND CONNECTORS
HEADLAMP SWITCH MUX CIRCUIT SHORT TO GROUND
HEADLAMP SWITCH MUX CIRCUIT SHORT TO MUX RETURN CIRCUIT
BODY CONTROL MODULE

TEST	ACTION	APPLICABILITY
1	Turn the ignition on. With the DRBIII®, record and erase DTC's. Turn the headlamps to the ON position. With the DRBIII®, read DTCs. Does the DRBIII® display HEADLAMP SWITCH SHORT TO GROUND? Yes → Go To 2 No → Go To 5	All
2	Turn the ignition off. Disconnect the Headlamp Switch harness connector. Turn the ignition on. With the DRBIII®, select Body, Body Control Module and read the Headlamp Switch Sensor voltage.. Does the DRB display a Headlamp Switch Voltage of more than 4.8 volts? Yes → Replace the Headlamp Switch in accordance with the Service Information. Perform BODY VERIFICATION TEST - VER 1. No → Go To 3	All
3	Turn the ignition off to the lock position. Disconnect the applicable Body Control Module harness connector. Disconnect the Headlamp Switch harness connector. **Note: Check connectors - Clean/repair as necessary.** Measure the resistance between ground and the Headlamp Switch MUX circuit. Is the resistance less than 5.0 ohms? Yes → Repair the Headlamp Switch MUX Circuit for a short to ground. Perform BODY VERIFICATION TEST - VER 1. No → Go To 4	All

HEADLAMP SWITCH SHORT TO GROUND — Continued

TEST	ACTION	APPLICABILITY
4	Turn the ignition off to the lock position. Disconnect the Body Control Module harness connector. Disconnect the Headlamp Switch harness connector. **Note: Check connectors - Clean/repair as necessary.** Measure the resistance between the Headlamp Switch MUX Return circuit and the Headlamp Switch MUX circuit. Is the resistance less than 5.0 ohms? Yes → Repair the Headlamp Switch MUX circuit for a short to the Headlamp Switch MUX Return circuit. Perform BODY VERIFICATION TEST - VER 1. No → Replace the Body Control Module in accordance with the Service Information. Perform BODY VERIFICATION TEST - VER 1.	All
5	The conditions necessary to set this DTC are not present at this time. Using the schematics as a guide, inspect the wiring and connectors specific to this circuit. Wiggle the wiring while checking for shorts and open circuits. Were there any problems found? Yes → Repair as necessary. Perform BODY VERIFICATION TEST - VER 1. No → Test Complete.	All

Symptom:
HIGH BEAM SWITCH INPUT OPEN

When Monitored and Set Condition:

HIGH BEAM SWITCH INPUT OPEN

When Monitored: Ignition On.

Set Condition: When voltage is above 4.8 volts.

POSSIBLE CAUSES
INTERMITTENT CONDITION
MULTIFUNCTION SWITCH
HIGH BEAM SWITCH MUX CIRCUIT OPEN
MULTIFUNCTION SWITCH MUX RETURN CIRCUIT OPEN
BODY CONTROL MODULE

TEST	ACTION	APPLICABILITY
1	Turn the ignition on. With the DRBIII®, clear all BCM DTC's. Turn the Headlamps On. Actuate the High Beams. With the DRBIII®, read the DTC information. Does the DRBIII® read: High Beam Switch Input Open? Yes → Go To 2 No → The condition that caused the symptom is currently not present. Inspect the related wiring for a possible intermittent condition. Look for any chafed, pierced,pinched, or partially broken wires. Perform BODY VERIFICATION TEST - VER 1.	All
2	Turn the ignition off Disconnect the Multifunction Switch harness connector. Connect a jumper wire between the High Beam Switch MUX circuit and the Multifunction Switch MUX Return circuit in the Multifunction Switch connector. Turn the ignition on. With the DRBIII®, read the Multifunction Switch voltage. Is the display voltage below 0.5 volts? Yes → Replace the Multifunction Switch. Perform BODY VERIFICATION TEST - VER 1. No → Go To 3	All

HIGH BEAM SWITCH INPUT OPEN — Continued

TEST	ACTION	APPLICABILITY
3	Turn the ignition off. Disconnect the applicable Body Control Module harness connector. Disconnect the Multifunction Switch harness connector. Measure the resistance of the High Beam Switch MUX circuit from the Body Control Module connector to the Multifunction Switch harness connector. Is the resistance above 5.0 ohms? Yes → Repair the High Beam Switch MUX circuit for an open. Perform BODY VERIFICATION TEST - VER 1. No → Go To 4	All
4	Turn the ignition off. Disconnect the applicable Body Control Module harness connector. Disconnect the Multifunction Switch harness connector. Measure the resistance of the Multifunction Switch MUX Return circuit from the Body Control Module connector to the Multifunction Switch harness connector. Is the resistance above 5.0 ohms? Yes → Repair the Multifunction Switch MUX Return circuit for an open. Perform BODY VERIFICATION TEST - VER 1. No → Replace the Body Control Module. Perform BODY VERIFICATION TEST - VER 1.	All

Symptom:
HIGH BEAM SWITCH INPUT SHORT

When Monitored and Set Condition:

HIGH BEAM SWITCH INPUT SHORT

When Monitored: Ignition On.

Set Condition: When voltage is below 0.488 volts.

POSSIBLE CAUSES
INTERMITTENT CONDITION
MULTIFUNCTION SWITCH
HIGH BEAM SWITCH MUX CIRCUIT SHORT TO GROUND
HIGH BEAM SWITCH MUX SHORT TO MUX RETURN CIRCUIT
BODY CONTROL MODULE

TEST	ACTION	APPLICABILITY
1	Turn the ignition on. With the DRBIII®, clear all BCM DTC's. Actuate the High Beams. With the DRBIII®, read the DTC information. Does the DRBIII® read: High Beam Switch Input Short? Yes → Go To 2 No → The condition that caused the symptom is currently not present. Inspect the related wiring for a possible intermittent condition. Look for any chafed, pierced,pinched, or partially broken wires. Perform BODY VERIFICATION TEST - VER 1.	All
2	Turn the ignition off. Disconnect the Multifunction Switch harness connector. Turn the ignition on. With the DRBIII®, read the Multifunction Switch voltage. Is the voltage above 4.8 volts? Yes → Replace the Multifunction Switch. Perform BODY VERIFICATION TEST - VER 1. No → Go To 3	All
3	Turn the ignition off. Disconnect the applicable Body Control Module harness connector. Disconnect the Multifunction Switch Harness connector. Measure the resistance between the High Beam Switch MUX circuit and ground. Is the resistance below 5.0 ohms? Yes → Repair the High Beam Switch MUX circuit for a short to ground. Perform BODY VERIFICATION TEST - VER 1. No → Go To 4	All

HIGH BEAM SWITCH INPUT SHORT — Continued

TEST	ACTION	APPLICABILITY
4	Turn the ignition off. Disconnect the applicable Body Control Module harness connector. Disconnect the Multifunction Switch harness connector. Measure the resistance between the Multifunction Switch MUX Return circuit and the High Beam Switch MUX circuit. Is the resistance below 5.0 ohms? Yes → Repair the High Beam Switch MUX circuit for a short to the Multifunction Switch MUX Return circuit. Perform BODY VERIFICATION TEST - VER 1. No → Test Complete.	All

Symptom:
LEFT FRONT TURN SIGNAL OUTPUT OPEN

When Monitored and Set Condition:

LEFT FRONT TURN SIGNAL OUTPUT OPEN

When Monitored: Ignition On and left turn signal On.

Set Condition: When output voltage status is LOW.

POSSIBLE CAUSES
INTERMITTENT CONDITION
GROUND CIRCUIT OPEN
TURN SIGNAL LAMP OPEN
LEFT TURN SIGNAL OUTPUT CIRCUIT OPEN
BODY CONTROL MODULE

TEST	ACTION	APPLICABILITY
1	Turn the ignition on. With the DRBIII®, clear all BCM DTC's. Actuate the Turn Signals. With the DRBIII®, read the DTC information. Does the DRBIII® read: Left Front Turn Signal Output Open? Yes → Go To 2 No → The condition that caused the symptom is currently not present. Inspect the related wiring for a possible intermittent condition. Look for any chafed, pierced,pinched, or partially broken wires. Perform BODY VERIFICATION TEST - VER 1.	All
2	Turn the ignition off Disconnect the Left Front Turn Signal harness connector. Using a 12-volt test light connected to 12-volts, check the ground circuit. Does the test light illuminate brightly? Yes → Go To 3 No → Repair the Ground Circuit. Perform BODY VERIFICATION TEST - VER 1.	All
3	Turn the ignition off. Disconnect the Left Front Turn Signal Lamp connector. Turn the ignition on. Turn the Left Turn Signal on. Using a 12-volt test light connected to ground, check the Left Front Turn Signal Output circuit. Does the test light illuminate brightly? Yes → Replace the Turn Signal Lamp. Perform BODY VERIFICATION TEST - VER 1. No → Go To 4	All

LEFT FRONT TURN SIGNAL OUTPUT OPEN — Continued

TEST	ACTION	APPLICABILITY
4	Turn the ignition off. Disconnect the BCM C2 harness connector. Disconnect the left front turn signal lamp harness connector. Measure the resistance of the Left Front Turn Signal Output Circuit and ground. Is the resistance above 5.0 ohms? Yes → Repair the Left Front Turn Signal Output Circuit for an open condition. Perform BODY VERIFICATION TEST - VER 1. No → Replace the Body Control Module. Perform BODY VERIFICATION TEST - VER 1.	All

Symptom:
LEFT FRONT TURN SIGNAL OUTPUT SHORT

When Monitored and Set Condition:

LEFT FRONT TURN SIGNAL OUTPUT SHORT

When Monitored: Ignition and left turn signal On.

Set Condition: When output voltage status is Low.

POSSIBLE CAUSES
INTERMITTENT CONDITION
LEFT FRONT TURN SIGNAL OUTPUT SHORT TO GROUND
TURN SIGNAL LAMP
BODY CONTROL MODULE

TEST	ACTION	APPLICABILITY
1	Turn the ignition on. With the DRBIII®, clear all BCM DTC's. Actuate the Turn Signals. With the DRBIII®, read the DTC information. Does the DRBIII® read: Left Front Turn Signal Output Short? Yes → Go To 2 No → The condition that caused the symptom is currently not present. Inspect the related wiring for a possible intermittent condition. Look for any chafed, pierced,pinched, or partially broken wires. Perform BODY VERIFICATION TEST - VER 1.	All
2	Turn the ignition off. Disconnect the Left Front Turn Signal Lamp connector. Disconnect the BCM C2 harness connector. Measure the resistance between the Left Front Turn Signal Output circuit and ground. Is the resistance below 100.0 ohms? Yes → Repair the Left Front Turn Signal Output circuit for a short to ground. Perform BODY VERIFICATION TEST - VER 1. No → Go To 3	All

LEFT FRONT TURN SIGNAL OUTPUT SHORT — Continued

TEST	ACTION	APPLICABILITY
3	Turn the ignition off. Disconnect the Left Front Turn Signal Lamp connector. Turn the ignition on. Turn the Left Turn Signal on. Using a 12-volt test light connected to ground, check the Left Front Turn Signal Output circuit. Does the test light illuminate brightly? Yes → Replace the Turn Signal Lamp. Perform BODY VERIFICATION TEST - VER 1. No → Replace the Body Control Module. Perform BODY VERIFICATION TEST - VER 1.	All

Symptom:
LEFT HIGH BEAM HEADLAMP CIRCUIT OPEN

POSSIBLE CAUSES
FRONT CONTROL MODULE
GROUND CIRCUIT OPEN
LEFT HEADLAMP
LEFT HIGH BEAM DRIVER CIRCUIT OPEN
WIRING HARNESS INSPECTION

TEST	ACTION	APPLICABILITY
1	Turn the ignition on. With the DRB, erase the Front Control Module DTC's. Turn the headlamps on. Switch the headlamps between high beam and low beam several times, pausing for 5 seconds in each position. With the DRB, read Front Control Module DTC's. Is this DTC present? Yes → Go To 2 No → Go To 5	All
2	Turn the ignition off. Disconnect the Left Headlamp harness connector. Using a 12-volt test light connected to 12-volts, check the Ground circuit. **NOTE: The test light must illuminate brightly. Compare the brightness to that of a direct connection to the battery.** Does the test light illuminate brightly? Yes → Go To 3 No → Repair the Ground circuit for an open. Perform BODY VERIFICATION TEST - VER 1.	All
3	Turn the ignition off. Disconnect the Left Headlamp. Disconnect the Front Control Module from the Intelligent Power Module. Measure the resistance of the Left High Beam Driver circuit. Is the resistance below 10.0 ohms? Yes → Go To 4 No → Repair the Left High Beam Driver circuit for an open. Perform BODY VERIFICATION TEST - VER 1.	All

LEFT HIGH BEAM HEADLAMP CIRCUIT OPEN — Continued

TEST	ACTION	APPLICABILITY
4	Turn the ignition off. Disconnect the Left Headlamp harness connector. Using a 12-volt test light connected to ground, check the Left High Beam Driver circuit in the Left Headlamp harness connector. Turn the high beam headlamps on. **NOTE: The test light must illuminate brightly. Compare the brightness to that of a direct connection to the battery.** Does the test light illuminate brightly? Yes → Replace the Left Headlamp Bulb. Perform BODY VERIFICATION TEST - VER 1. No → Replace the Front Control Module. Perform BODY VERIFICATION TEST - VER 1.	All
5	Turn the ignition off. **NOTE: Visually inspect the related wiring harness and circuits. Look for any chafed, pierced, pinched, or partially broken wires.** **NOTE: Visually inspect the related wiring harness connectors. Look for broken, bent, pushed out, or corroded terminals.** **Note: Refer to any Technical Service Bulletins (TSB) that may apply.** Were any problems found? Yes → Repair as necessary. Perform BODY VERIFICATION TEST - VER 1. No → Test Complete.	All

Symptom:
LEFT HIGH BEAM HEADLAMP CIRCUIT SHORTED TO GROUND

POSSIBLE CAUSES
FRONT CONTROL MODULE
LEFT HEADLAMP
LEFT HIGH BEAM DRIVER CIRCUIT SHORTED TO GROUND
WIRING PROBLEM
WIRING HARNESS INSPECTION

TEST	ACTION	APPLICABILITY
1	Turn the ignition on. With the DRB, erase the Front Control Module DTC's. Turn the headlamps on. Switch the headlamps between high beam and low beam several times, pausing for 5 seconds in each position. With the DRB, read Front Control Module DTC's. Is this DTC present? Yes → Go To 2 No → Go To 5	All
2	Turn the ignition off. Disconnect the Left Headlamp. Disconnect the Front Control Module from the Intelligent Power Module. Measure the resistance between Ground and the Left High Beam Driver circuit. Is the resistance below 100.0 ohms? Yes → Repair the Left High Beam Driver circuit for a short to ground Perform BODY VERIFICATION TEST - VER 1. No → Go To 3	All
3	Turn the ignition off. Turn the Headlamps off. Install a substitute Headlamp Bulb in place of the Left Headlamp Bulb. Turn the ignition on. With the DRB, erase the Front Control Module DTC's. Turn the headlamps on. Switch the headlamps between high beam and low beam several times, pausing for 5 seconds in each position. With the DRB, read Front Control Module DTC's. Does the DRB display this DTC? Yes → Go To 4 No → Replace the original Left Headlamp Bulb. Perform BODY VERIFICATION TEST - VER 1.	All

LEFT HIGH BEAM HEADLAMP CIRCUIT SHORTED TO GROUND — Continued

TEST	ACTION	APPLICABILITY
4	Turn the ignition off. Inspect the wiring and connectors associated with the Left High Beam Driver circuit. Were any problems found? Yes → Repair as necessary. Perform BODY VERIFICATION TEST - VER 1. No → Replace the Front Control Module. Perform BODY VERIFICATION TEST - VER 1.	All
5	Turn the ignition off. **NOTE: Visually inspect the related wiring harness and circuits. Look for any chafed, pierced, pinched, or partially broken wires.** **NOTE: Visually inspect the related wiring harness connectors. Look for broken, bent, pushed out, or corroded terminals.** **Note: Refer to any Technical Service Bulletins (TSB) that may apply.** Were any problems found? Yes → Repair as necessary. Perform BODY VERIFICATION TEST - VER 1. No → Test Complete.	All

Symptom:
LEFT HIGH BEAM HEADLAMP CIRCUIT SHORTED TO VOLTAGE

POSSIBLE CAUSES
FRONT CONTROL MODULE
GROUND CIRCUIT OPEN
HIGH BEAM AND LOW BEAM DRIVERS CIRCUITS SHORTED TOGETHER
LEFT HEADLAMP
LEFT HIGH BEAM DRIVER CIRCUIT SHORTED TO VOLTAGE
WIRING PROBLEM
WIRING HARNESS INSPECTION

TEST	ACTION	APPLICABILITY
1	Turn the ignition on. With the DRB, erase the Front Control Module DTC's. Turn the headlamps on. Switch the headlamps between high beam and low beam several times, pausing for 5 seconds in each position. With the DRB, read Front Control Module DTC's. Is this DTC present? Yes → Go To 2 No → Go To 7	All
2	Turn the ignition off. Disconnect the Left Headlamp harness connector. Using a 12-volt test light connected to 12-volts, check the Ground circuit. **NOTE: The test light must illuminate brightly. Compare the brightness to that of a direct connection to the battery.** Does the test light illuminate brightly? Yes → Go To 3 No → Repair the Ground circuit for an open. Perform BODY VERIFICATION TEST - VER 1.	All
3	Turn the ignition off. Disconnect the Left Headlamp harness connector. Disconnect the Front Control Module. Measure the resistance between the Left High Beam Driver circuit and the Left Low Beam Driver circuit at the Left Headlamp harness connector. Is the resistance below 100.0 ohms? Yes → Repair the Left High Beam Driver circuit for a short to the Left Low Beam Driver circuit. Perform BODY VERIFICATION TEST - VER 1. No → Go To 4	All

LEFT HIGH BEAM HEADLAMP CIRCUIT SHORTED TO VOLTAGE — Continued

TEST	ACTION	APPLICABILITY
4	Turn the ignition off. Disconnect the Left Headlamp harness connector. Disconnect the Front Control Module. Turn the ignition on. Measure the voltage of the Left High Beam Driver circuit. Is the voltage below 1.0 volt? Yes → Go To 5 No → Repair the Left High Beam Driver circuit for a short to voltage. Perform BODY VERIFICATION TEST - VER 1.	All
5	Turn the ignition off. Turn the Headlamps off. Install a substitute Headlamp Bulb in place of the Left Headlamp Bulb. Turn the ignition on. With the DRB, erase the Front Control Module DTC's. Turn the headlamps on. Switch the headlamps between high beam and low beam several times, pausing for 5 seconds in each position. With the DRB, read Front Control Module DTC's. Does the DRB display this DTC? Yes → Go To 6 No → Replace the original Left Headlamp Bulb. Perform BODY VERIFICATION TEST - VER 1.	All
6	Turn the ignition off. Inspect the wiring and connectors associated with the Left High Beam Driver circuit. Were any problems found? Yes → Repair as necessary. Perform BODY VERIFICATION TEST - VER 1. No → Replace the Front Control Module. Perform BODY VERIFICATION TEST - VER 1.	All
7	Turn the ignition off. **NOTE: Visually inspect the related wiring harness and circuits. Look for any chafed, pierced, pinched, or partially broken wires.** **NOTE: Visually inspect the related wiring harness connectors. Look for broken, bent, pushed out, or corroded terminals.** **Note: Refer to any Technical Service Bulletins (TSB) that may apply.** Were any problems found? Yes → Repair as necessary. Perform BODY VERIFICATION TEST - VER 1. No → Test Complete.	All

Symptom:
LEFT LOW BEAM HEADLAMP CIRCUIT OPEN

POSSIBLE CAUSES
FRONT CONTROL MODULE
GROUND CIRCUIT OPEN
LEFT HEADLAMP
LEFT LOW BEAM DRIVER CIRCUIT OPEN
WIRING HARNESS INSPECTION

TEST	ACTION	APPLICABILITY
1	Turn the ignition on. With the DRB, erase the Front Control Module DTC's. Turn the headlamps on. Switch the headlamps between high beam and low beam several times, pausing for 5 seconds in each position. With the DRB, read Front Control Module DTC's. Is this DTC present? Yes → Go To 2 No → Go To 5	All
2	Turn the ignition off. Disconnect the Left Headlamp harness connector. Using a 12-volt test light connected to 12-volts, check the Ground circuit. **NOTE: The test light must illuminate brightly. Compare the brightness to that of a direct connection to the battery.** Does the test light illuminate brightly? Yes → Go To 3 No → Repair the Ground circuit for an open. Perform BODY VERIFICATION TEST - VER 1.	All
3	Turn the ignition off. Disconnect the Left Headlamp. Disconnect the Front Control Module from the Intelligent Power Module. Measure the resistance of the Left Low Beam Driver circuit. Is the resistance below 10.0 ohms? Yes → Go To 4 No → Repair the Left Low Beam Driver circuit for an open. Perform BODY VERIFICATION TEST - VER 1.	All

LEFT LOW BEAM HEADLAMP CIRCUIT OPEN — Continued

TEST	ACTION	APPLICABILITY
4	Turn the ignition off. Disconnect the Left Headlamp harness connector. Using a 12-volt test light connected to ground, check the Left Low Beam Driver circuit in the Left Headlamp harness connector. **NOTE: The test light must illuminate brightly. Compare the brightness to that of a direct connection to the battery.** Turn the low beam headlamps on. Does the test light illuminate brightly? Yes → Replace the Left Headlamp Bulb. Perform BODY VERIFICATION TEST - VER 1. No → Replace the Front Control Module. Perform BODY VERIFICATION TEST - VER 1.	All
5	Turn the ignition off. **NOTE: Visually inspect the related wiring harness and circuits. Look for any chafed, pierced, pinched, or partially broken wires.** **NOTE: Visually inspect the related wiring harness connectors. Look for broken, bent, pushed out, or corroded terminals.** **Note: Refer to any Technical Service Bulletins (TSB) that may apply.** Were any problems found? Yes → Repair as necessary. Perform BODY VERIFICATION TEST - VER 1. No → Test Complete.	All

Symptom:
LEFT LOW BEAM HEADLAMP CIRCUIT SHORTED TO GROUND

POSSIBLE CAUSES
FRONT CONTROL MODULE
LEFT HEADLAMP
LEFT LOW BEAM DRIVER CIRCUIT SHORTED TO GROUND
WIRING PROBLEM
WIRING HARNESS INSPECTION

TEST	ACTION	APPLICABILITY
1	Turn the ignition on. With the DRB, erase the Front Control Module DTC's. Turn the headlamps on. Switch the headlamps between high beam and low beam several times, pausing for 5 seconds in each position. With the DRB, read Front Control Module DTC's. Is this DTC present? Yes → Go To 2 No → Go To 5	All
2	Turn the ignition off. Disconnect the Left Headlamp. Disconnect the Front Control Module from the Intelligent Power Module. Measure the resistance between Ground and the Left Low Beam Driver circuit. Is the resistance below 100.0 ohms? Yes → Repair the Left Low Beam Driver circuit for a short to ground Perform BODY VERIFICATION TEST - VER 1. No → Go To 3	All
3	Turn the ignition off. Turn the Headlamps off. Install a substitute Headlamp Bulb in place of the Left Headlamp Bulb. Turn the ignition on. With the DRB, erase the Front Control Module DTC's. Turn the headlamps on. Switch the headlamps between high beam and low beam several times, pausing for 5 seconds in each position. With the DRB, read Front Control Module DTC's. Does the DRB display this DTC? Yes → Go To 4 No → Replace the original Left Headlamp Bulb. Perform BODY VERIFICATION TEST - VER 1.	All

LEFT LOW BEAM HEADLAMP CIRCUIT SHORTED TO GROUND — Continued

TEST	ACTION	APPLICABILITY
4	Turn the ignition off. Inspect the wiring and connectors associated with the Left Low Beam Driver circuit. Were any problems found? Yes → Repair as necessary. Perform BODY VERIFICATION TEST - VER 1. No → Test Complete.	All
5	Turn the ignition off. **NOTE: Visually inspect the related wiring harness and circuits. Look for any chafed, pierced, pinched, or partially broken wires.** **NOTE: Visually inspect the related wiring harness connectors. Look for broken, bent, pushed out, or corroded terminals.** **Note: Refer to any Technical Service Bulletins (TSB) that may apply.** Were any problems found? Yes → Repair as necessary. Perform BODY VERIFICATION TEST - VER 1. No → Test Complete.	All

Symptom:

LEFT LOW BEAM HEADLAMP CIRCUIT SHORTED TO VOLTAGE

POSSIBLE CAUSES
FRONT CONTROL MODULE
GROUND CIRCUIT OPEN
HIGH BEAM AND LOW BEAM DRIVERS CIRCUITS SHORTED TOGETHER
LEFT HEADLAMP
LEFT LOW BEAM DRIVER CIRCUIT SHORTED TO VOLTAGE
WIRING PROBLEM
WIRING HARNESS INSPECTION

TEST	ACTION	APPLICABILITY
1	Turn the ignition on. With the DRB, erase the Front Control Module DTC's. Turn the headlamps on. Switch the headlamps between high beam and low beam several times, pausing for 5 seconds in each position. With the DRB, read Front Control Module DTC's. Is this DTC present? Yes → Go To 2 No → Go To 7	All
2	Turn the ignition off. Disconnect the Left Headlamp harness connector. Using a 12-volt test light connected to 12-volts, check the Ground circuit. **NOTE: The test light must illuminate brightly. Compare the brightness to that of a direct connection to the battery.** Does the test light illuminate brightly? Yes → Go To 3 No → Repair the Ground circuit for an open. Perform BODY VERIFICATION TEST - VER 1.	All
3	Turn the ignition off. Disconnect the Left Headlamp harness connector. Disconnect the Front Control Module. Measure the resistance between the Left High Beam Driver circuit and the Left Low Beam Driver circuit at the Left Headlamp harness connector. Is the resistance below 100.0 ohms? Yes → Repair the Left High Beam Driver circuit for a short to the Left Low Beam Driver circuit. Perform BODY VERIFICATION TEST - VER 1. No → Go To 4	All

LEFT LOW BEAM HEADLAMP CIRCUIT SHORTED TO VOLTAGE — Continued

TEST	ACTION	APPLICABILITY
4	Turn the ignition off. Disconnect the Left Headlamp harness connector. Disconnect the Front Control Module. Turn the ignition on. Measure the voltage of the Left Low Beam Driver circuit. Is the voltage below 1.0 volt? Yes → Go To 5 No → Repair the Left Low Beam Driver circuit for a short to voltage. Perform BODY VERIFICATION TEST - VER 1.	All
5	Turn the ignition off. Turn the Headlamps off. Install a substitute Headlamp in place of the Left Headlamp. Turn the ignition on. With the DRB, erase the Front Control Module DTC's. Turn the headlamps on. Switch the headlamps between high beam and low beam several times, pausing for 5 seconds in each position. With the DRB, read Front Control Module DTC's. Does the DRB display this DTC? Yes → Go To 6 No → Replace the original Left Headlamp Bulb. Perform BODY VERIFICATION TEST - VER 1.	All
6	Turn the ignition off. Inspect the wiring and connectors associated with the Left Low Beam Driver circuit. Were any problems found? Yes → Repair as necessary. Perform BODY VERIFICATION TEST - VER 1. No → Replace the Front Control Module. Perform BODY VERIFICATION TEST - VER 1.	All
7	Turn the ignition off. **NOTE: Visually inspect the related wiring harness and circuits. Look for any chafed, pierced, pinched, or partially broken wires.** **NOTE: Visually inspect the related wiring harness connectors. Look for broken, bent, pushed out, or corroded terminals.** **Note: Refer to any Technical Service Bulletins (TSB) that may apply.** Were any problems found? Yes → Repair as necessary. Perform BODY VERIFICATION TEST - VER 1. No → Test Complete.	All

Symptom:
LEFT REAR TURN SIGNAL OUTPUT OPEN

When Monitored and Set Condition:

LEFT REAR TURN SIGNAL OUTPUT OPEN

When Monitored: Ignition and left turn signal On.

Set Condition: When Output voltage status is LOW.

POSSIBLE CAUSES
INTERMITTENT CONDITION
GROUND CIRCUIT OPEN
TURN SIGNAL LAMP OPEN
LEFT REAR TURN SIGNAL OUTPUT CIRCUIT OPEN
BODY CONTROL MODULE

TEST	ACTION	APPLICABILITY
1	Turn the ignition on. With the DRBIII®, clear all BCM DTC's. Actuate the Turn Signals. With the DRBIII®, read the DTC information. Does the DRBIII® read: Left Rear Turn Signal Output Open? Yes → Go To 2 No → The condition that caused the symptom is currently not present. Inspect the related wiring for a possible intermittent condition. Look for any chafed, pierced,pinched, or partially broken wires. Perform BODY VERIFICATION TEST - VER 1.	All
2	Turn the ignition off. Disconnect the Left Rear Turn Signal harness connector. Using a 12-volt test light connected to 12-volts, check the ground circuit. Does the test light illuminate brightly? Yes → Go To 3 No → Repair the Ground Circuit. Perform BODY VERIFICATION TEST - VER 1.	All
3	Turn the ignition off. Disconnect the Left Rear Turn Signal Lamp connector. Turn the ignition on. Turn the Left Turn Signal on. Using a 12-volt test light connected to ground, check the Left Rear Turn Signal Output circuit. Does the test light illuminate brightly? Yes → Replace the Turn Signal Lamp. Perform BODY VERIFICATION TEST - VER 1. No → Go To 4	All

LEFT REAR TURN SIGNAL OUTPUT OPEN — Continued

TEST	ACTION	APPLICABILITY
4	Turn the ignition off. Disconnect the Body Control Module C2 connector. Disconnect the left rear tail lamp connector. Measure the resistance of the Left Rear Turn Signal Driver Circuit to ground. Is the resistance above 5.0 ohms? Yes → Repair the Left Rear Turn Signal Driver Circuit for an open condition. Perform BODY VERIFICATION TEST - VER 1. No → Replace the Body Control Module. Perform BODY VERIFICATION TEST - VER 1.	All

Symptom:
LEFT REAR TURN SIGNAL OUTPUT SHORT

When Monitored and Set Condition:

LEFT REAR TURN SIGNAL OUTPUT SHORT

When Monitored: Ignition and left turn signal On.

Set Condition: When output voltage status is Low.

POSSIBLE CAUSES
INTERMITTENT CONDITION
LEFT REAR TURN SIGNAL DRIVER CIRCUIT SHORT TO GROUND
TURN SIGNAL LAMP
BODY CONTROL MODULE

TEST	ACTION	APPLICABILITY
1	Turn the ignition on. With the DRBIII®, clear all BCM DTC's. Actuate the Turn Signals. With the DRBIII®, read the DTC information. Does the DRBIII® read: Left Rear Turn Signal Output Short? Yes → Go To 2 No → The condition that caused the symptom is currently not present. Inspect the related wiring for a possible intermittent condition. Look for any chafed, pierced,pinched, or partially broken wires. Perform BODY VERIFICATION TEST - VER 1.	All
2	Turn the ignition off. Disconnect the Left Rear Turn Signal Lamp connector. Disconnect the BCM harness connector. Measure the resistance between the Left Rear Turn Signal Driver circuit and ground. Is the resistance below 100.0 ohms? Yes → Repair the Left Rear Turn Signal Driver circuit for a short to ground. Perform BODY VERIFICATION TEST - VER 1. No → Go To 3	All

LEFT REAR TURN SIGNAL OUTPUT SHORT — Continued

TEST	ACTION	APPLICABILITY
3	Turn the ignition off. Disconnect the Left Rear Turn Signal Lamp connector. Turn the ignition on. Turn the Left Turn Signal on. Using a 12-volt test light connected to ground, check the Left Rear Turn Signal Driver circuit. Does the test light illuminate brightly? Yes → Replace the Turn Signal Lamp. Perform BODY VERIFICATION TEST - VER 1. No → Replace the Body Control Module. Perform BODY VERIFICATION TEST - VER 1.	All

Symptom:

LEFT SIDE PARK LAMP OPEN

When Monitored and Set Condition:

LEFT SIDE PARK LAMP OPEN

When Monitored: Anytime the FCM is active.

Set Condition: When B+ voltage is below 10.0 volts.

POSSIBLE CAUSES
INTERMITTENT CONDITION
GROUND CIRCUIT
PARK LAMP
PARK LAMP FUSE #2
PARK LAMP RELAY
PARK LAMP OUTPUT CIRCUIT OPEN
FRONT CONTROL MODULE
INTELLIGENT POWER MODULE

TEST	ACTION	APPLICABILITY
1	Turn the ignition on. With the DRBIII®, clear all FCM DTC's. Turn the Park Lamps on. With the DRBIII®, read the DTC information. Does the DRBIII® read: Left Side Park Lamp Fuse Outage? Yes → Go To 2 No → The condition that caused the symptom is currently not present. Inspect the related wiring for a possible intermittent condition. Look for any chafed, pierced,pinched, or partially broken wires. Perform BODY VERIFICATION TEST - VER 1.	All
2	Turn the ignition off Disconnect the left front Park Lamp harness connector. Using a 12-volt test light connected to 12-volts, check the ground circuit. Does the test light illuminate brightly? Yes → Go To 3 No → Repair the Ground Circuit. Perform BODY VERIFICATION TEST - VER 1.	All

LEFT SIDE PARK LAMP OPEN — Continued

TEST	ACTION	APPLICABILITY
3	Turn the ignition off. Disconnect the left front park lamp connector. Turn the ignition on. Turn the Park Lamps on. Using a 12-volt test light connected to ground, check the Park Lamp Output circuit. Does the test light illuminate brightly? Yes → Replace the Park Lamp. Perform BODY VERIFICATION TEST - VER 1. No → Go To 4	All
4	Turn the ignition off. Check the IPM Park Lamp Fuse #2. Is the Fuse open? Yes → Replace the Park Lamp Fuse #2. Perform BODY VERIFICATION TEST - VER 1. No → Go To 5	All
5	Turn the ignition off. Install a known good relay in place of the Park Lamp Relay. Turn the Park Lamps on. Do the Park Lamps operate normally? Yes → Replace the Park Lamp Relay. Perform BODY VERIFICATION TEST - VER 1. No → Go To 6	All
6	Turn the ignition off. Disconnect the IPM harness connector. Measure the resistance of the Park Lamp Output Circuit to ground. Is the resistance below 5.0 ohms? Yes → Repair the Park Lamp Output Circuit for an open condition. Perform BODY VERIFICATION TEST - VER 1. No → Go To 7	All
7	Turn the ignition off. Remove the Park Lamp Relay. Measure the voltage of the Fused B+ circuit of the Park Lamp Relay. Is the voltage above 10.0 volts? Yes → Replace the Front Control Module. Perform BODY VERIFICATION TEST - VER 1. No → Replace the Intelligent Power Module. Perform BODY VERIFICATION TEST - VER 1.	All

Symptom:

PARK LAMP OUTPUT 1 OPEN

When Monitored and Set Condition:

PARK LAMP OUTPUT 1 OPEN

When Monitored: Ignition on.

Set Condition: The IPM detects high current from the Park Lamp Relay Control circuit.

POSSIBLE CAUSES
MISSING RELAY
OPEN FUSE
PARK LAMP RELAY
INTERMITTENT CONDITION
RIGHT FRONT FUSED PARK LAMP RELAY OUTPUT CIRCUIT OPEN
FRONT CONTROL MODULE
INTELLIGENT POWER MODULE

TEST	ACTION	APPLICABILITY
1	Turn the ignition on. With the DRBIII®, clear all IPM DTC's. Turn the Park Lamps on. With the DRBIII®, read the DTC information. Does the DRBIII® read: Park Lamp Output 1 Open? Yes → Go To 2 No → Go To 6	All
2	Turn the ignition off. Check the IPM to make certain the Park Lamp Relay is present. Is the Park Lamp Relay present? Yes → Go To 3 No → Replace the missing Park Lamp Relay. Perform BODY VERIFICATION TEST - VER 1.	All
3	Turn the ignition off. Check the IPM Park Lamp fuse #3. Is the fuse open? Yes → Replace the open fuse. Perform BODY VERIFICATION TEST - VER 1. No → Go To 4	All

PARK LAMP OUTPUT 1 OPEN — Continued

TEST	ACTION	APPLICABILITY
4	Turn the ignition off. Install a known good relay in place of the park lamp relay. Turn the Park Lamps On. Do the Park Lamps operate normally? Yes → Replace the Park Lamp Relay. Perform BODY VERIFICATION TEST - VER 1. No → Go To 5	All
5	Turn the ignition off Remove the Park Lamp Relay. Measure the voltage of the Fused B+ circuit of the park lamp relay. Is the voltage above 10 volts? Yes → Replace the Front Control Module. Perform BODY VERIFICATION TEST - VER 1. No → Replace the Intelligent Power Module. Perform BODY VERIFICATION TEST - VER 1.	All
6	Turn the ignition off. Disconnect the Front Control Module from the IPM. Remove the Park Lamp Relay. Measure the resistance of the Park Lamp Relay Control Circuit. Is the resistance below 5.0 ohms? Yes → The condition that caused the symptom is currently not present. Inspect the related wiring for a possible intermittent condition. Look for any chafed, pierced,pinched, or partially broken wires. Perform BODY VERIFICATION TEST - VER 1. No → Repair the Right Front Fused Park Lamp Relay Output circuit for an open condition. Perform BODY VERIFICATION TEST - VER 1.	All

Symptom:
PARK LAMP OUTPUT 1 SHORT TO BATTERY

When Monitored and Set Condition:

PARK LAMP OUTPUT 1 SHORT TO BATTERY

When Monitored: Ignition on.

Set Condition: When a battery fault condition is present.

POSSIBLE CAUSES
INTERMITTENT CONDITION
PARK LAMP RELAY
FRONT CONTROL MODULE
INTELLIGENT POWER MODULE

TEST	ACTION	APPLICABILITY
1	Turn the ignition on. With the DRBIII®, clear all FCM DTC's. Turn the Park Lamps on. With the DRBIII®, read the DTC information. Does the DRBIII® read: Park Lamp Output 1 Short to BATT? Yes → Go To 2 No → The condition that caused the symptom is currently not present. Inspect the related wiring for a possible intermittent condition. Look for any chafed, pierced,pinched, or partially broken wires. Perform BODY VERIFICATION TEST - VER 1.	All
2	Turn the ignition off. Remove and install a known good relay in place of the Park Lamp Relay. Do the Park Lamps operate normally? Yes → Replace the Park Lamp Relay. Perform BODY VERIFICATION TEST - VER 1. No → Go To 3	All
3	Turn the ignition off. Remove the Park Lamp Relay from the IPM. Remove the Front Control Module from the IPM. Measure the voltage of the Park Lamp Relay Control circuit and ground. Is the voltage above 1.0 volts? Yes → Replace the Intelligent Power Module. Perform BODY VERIFICATION TEST - VER 1. No → Replace the Front Control Module. Perform BODY VERIFICATION TEST - VER 1.	All

Symptom:

PARK LAMP OUTPUT 2 OPEN

When Monitored and Set Condition:

PARK LAMP OUTPUT 2 OPEN

When Monitored: Ignition on.

Set Condition: The IPM detects high current from the Park Lamp Relay Control circuit.

POSSIBLE CAUSES
MISSING RELAY
OPEN FUSE
PARK LAMP RELAY
INTERMITTENT CONDITION
LEFT FRONT FUSED PARK LAMP RELAY OUTPUT CIRCUIT OPEN
FRONT CONTROL MODULE
INTELLIGENT POWER MODULE

TEST	ACTION	APPLICABILITY
1	Turn the ignition on. With the DRBIII®, clear all IPM DTC's. Turn the Park Lamps on. With the DRBIII®, read the DTC information. Does the DRBIII® read: Park Lamp Output 2 Open Yes → Go To 2 No → Go To 6	All
2	Turn the ignition off. Check the IPM to make certain the Park Lamp Relay is present. Is the Park Lamp Relay present? Yes → Go To 3 No → Replace the missing Park Lamp Relay. Perform BODY VERIFICATION TEST - VER 1.	All
3	Turn the ignition off. Check the IPM Park Lamp fuse #2. Is the fuse open? Yes → Replace the open fuse. Perform BODY VERIFICATION TEST - VER 1. No → Go To 4	All

PARK LAMP OUTPUT 2 OPEN — Continued

TEST	ACTION	APPLICABILITY
4	Turn the ignition off. Install a known good relay in place of the park lamp relay. Turn the Park Lamps On. Do the Park Lamps operate normally? Yes → Replace the Park Lamp Relay. Perform BODY VERIFICATION TEST - VER 1. No → Go To 5	All
5	Turn the ignition off Remove the Park Lamp Relay. Measure the voltage of the Fused B+ circuit of the park lamp relay. Is the voltage above 10 volts? Yes → Replace the Front Control Module. Perform BODY VERIFICATION TEST - VER 1. No → Replace the Intelligent Power Module. Perform BODY VERIFICATION TEST - VER 1.	All
6	Turn the ignition off. Disconnect the Front Control Module from the IPM. Remove the Park Lamp Relay. Measure the resistance of the Park Lamp Relay Control Circuit. Is the resistance below 5.0 ohms? Yes → The condition that caused the symptom is currently not present. Inspect the related wiring for a possible intermittent condition. Look for any chafed, pierced,pinched, or partially broken wires. Perform BODY VERIFICATION TEST - VER 1. No → Repair the Left Front Fused Park Lamp Relay Output Circuit for an open condition. Perform BODY VERIFICATION TEST - VER 1.	All

Symptom:

PARK LAMP OUTPUT 2 SHORT TO BATTERY

When Monitored and Set Condition:

PARK LAMP OUTPUT 2 SHORT TO BATTERY

When Monitored: Ignition on.

Set Condition: When a battery fault condition is present.

POSSIBLE CAUSES
INTERMITTENT CONDITION
PARK LAMP RELAY
FRONT CONTROL MODULE
INTELLIGENT POWER MODULE

TEST	ACTION	APPLICABILITY
1	Turn the ignition on. With the DRBIII®, clear all FCM DTC's. Turn the Park Lamps on. With the DRBIII®, read the DTC information. Does the DRBIII® read: Park Lamp Output 2 Short to BATT Yes → Go To 2 No → The condition that caused the symptom is currently not present. Inspect the related wiring for a possible intermittent condition. Look for any chafed, pierced,pinched, or partially broken wires. Perform BODY VERIFICATION TEST - VER 1.	All
2	Turn the ignition off. Remove and install a known good relay in place of the Park Lamp Relay. Do the Park Lamps operate normally? Yes → Replace the Park Lamp Relay. Perform BODY VERIFICATION TEST - VER 1. No → Go To 3	All
3	Turn the ignition off. Remove the Park Lamp Relay from the IPM. Remove the Front Control Module from the IPM. Measure the voltage of the Park Lamp Relay Control circuit and ground. Is the voltage above 1.0 volts? Yes → Replace the Intelligent Power Module. Perform BODY VERIFICATION TEST - VER 1. No → Replace the Front Control Module. Perform BODY VERIFICATION TEST - VER 1.	All

Symptom:
RIGHT FRONT TURN SIGNAL OUTPUT OPEN

When Monitored and Set Condition:

RIGHT FRONT TURN SIGNAL OUTPUT OPEN

When Monitored: Ignition and right turn signal On.

Set Condition: When the output voltage status is LOW.

POSSIBLE CAUSES
INTERMITTENT CONDITION
GROUND CIRCUIT OPEN
TURN SIGNAL LAMP OPEN
RIGHT FRONT TURN SIGNAL DRIVER CIRCUIT OPEN
BODY CONTROL MODULE
INTELLIGENT POWER MODULE

TEST	ACTION	APPLICABILITY
1	Turn the ignition on. With the DRBIII®, clear all BCM DTC's. Actuate the Turn Signals. With the DRBIII®, read the DTC information. Does the DRBIII® read: Right Front Turn Signal Output Open? Yes → Go To 2 No → The condition that caused the symptom is currently not present. Inspect the related wiring for a possible intermittent condition. Look for any chafed, pierced,pinched, or partially broken wires. Perform BODY VERIFICATION TEST - VER 1.	All
2	Turn the ignition off. Disconnect the Right Front Turn Signal harness connector. Using a 12-volt test light connected to 12-volts, check the ground circuit. Does the test light illuminate brightly? Yes → Go To 3 No → Repair the Ground Circuit. Perform BODY VERIFICATION TEST - VER 1.	All

RIGHT FRONT TURN SIGNAL OUTPUT OPEN — Continued

TEST	ACTION	APPLICABILITY
3	Turn the ignition off. Disconnect the Right Front Turn Signal Lamp connector. Turn the ignition on. Turn the Right Turn Signal on. Using a 12-volt test light connected to ground, check the Right Front Turn Signal Output circuit. Does the test light illuminate brightly? Yes → Replace the Turn Signal Lamp. Perform BODY VERIFICATION TEST - VER 1. No → Go To 4	All
4	Turn the ignition off. Disconnect the Body Control Module C2 connector. Measure the resistance of the Right Front Turn Signal Driver Circuit to ground. Is the resistance above 5.0 ohms? Yes → Repair the Right Front Turn Signal Driver Circuit for an open condition. Perform BODY VERIFICATION TEST - VER 1. No → Go To 5	All
5	Turn the ignition off. Disconnect the Body Control Module C2 harness connector. Disconnect the IPM C8 harness connector. Measure the resistance of the Right Front Turn Signal Driver Circuit and ground. Is the resistance below 5.0 ohms? Yes → Replace the Body Control Module. Perform BODY VERIFICATION TEST - VER 1. No → Replace the Intelligent Power Module. Perform BODY VERIFICATION TEST - VER 1.	All

Symptom:
RIGHT FRONT TURN SIGNAL OUTPUT SHORT

When Monitored and Set Condition:

RIGHT FRONT TURN SIGNAL OUTPUT SHORT

When Monitored: Anytime the IPM is active.

Set Condition: When output voltage status is Low.

POSSIBLE CAUSES
INTERMITTENT CONDITION
RIGHT FRONT TURN SIGNAL OUTPUT SHORT TO GROUND
TURN SIGNAL LAMP
INTELLIGENT POWER MODULE

TEST	ACTION	APPLICABILITY
1	Turn the ignition on. With the DRBIII®, clear all IPM DTC's. Actuate the Turn Signals. With the DRBIII®, read the DTC information. Does the DRBIII® read: Right Front Turn Signal Output Short? Yes → Go To 2 No → The condition that caused the symptom is currently not present. Inspect the related wiring for a possible intermittent condition. Look for any chafed, pierced,pinched, or partially broken wires. Perform BODY VERIFICATION TEST - VER 1.	All
2	Turn the ignition off. Disconnect the Right Front Turn Signal Lamp connector. Disconnect the IPM harness connector. Measure the resistance between the Right Front Turn Signal Output circuit and ground. Is the resistance below 100.0 ohms? Yes → Repair the Right Front Turn Signal Output circuit for a short to ground. Perform BODY VERIFICATION TEST - VER 1. No → Go To 3	All

RIGHT FRONT TURN SIGNAL OUTPUT SHORT — Continued

TEST	ACTION	APPLICABILITY
3	Turn the ignition off. Disconnect the Right Front Turn Signal Lamp connector. Turn the ignition on. Turn the Right Turn Signal on. Using a 12-volt test light connected to ground, check the Right Front Turn Signal Output circuit. Does the test light illuminate brightly? Yes → Replace the Turn Signal Lamp. Perform BODY VERIFICATION TEST - VER 1. No → Replace the Intelligent Power Module. Perform BODY VERIFICATION TEST - VER 1.	All

Symptom:
RIGHT HIGH BEAM HEADLAMP CIRCUIT OPEN

POSSIBLE CAUSES
FRONT CONTROL MODULE
GROUND CIRCUIT OPEN
RIGHT HEADLAMP
RIGHT HIGH BEAM DRIVER CIRCUIT OPEN
WIRING HARNESS INSPECTION

TEST	ACTION	APPLICABILITY
1	Turn the ignition on. With the DRB, erase the Front Control Module DTC's. Turn the headlamps on. Switch the headlamps between high beam and low beam several times, pausing for 5 seconds in each position. With the DRB, read Front Control Module DTC's. Is this DTC present? Yes → Go To 2 No → Go To 5	All
2	Turn the ignition off. Disconnect the Right Headlamp harness connector. Using a 12-volt test light connected to 12-volts, check the Ground circuit. **NOTE: The test light must illuminate brightly. Compare the brightness to that of a direct connection to the battery.** Does the test light illuminate brightly? Yes → Go To 3 No → Repair the Ground circuit for an open. Perform BODY VERIFICATION TEST - VER 1.	All
3	Turn the ignition off. Disconnect the Right Headlamp. Disconnect the Front Control Module from the Intelligent Power Module. Measure the resistance of the Right High Beam Driver circuit. Is the resistance below 10.0 ohms? Yes → Go To 4 No → Repair the Right High Beam Driver circuit for an open. Perform BODY VERIFICATION TEST - VER 1.	All

RIGHT HIGH BEAM HEADLAMP CIRCUIT OPEN — Continued

TEST	ACTION	APPLICABILITY
4	Turn the ignition off. Disconnect the Right Headlamp harness connector. Using a 12-volt test light connected to ground, check the Right High Beam Driver circuit in the Right Headlamp harness connector. **NOTE: The test light must illuminate brightly. Compare the brightness to that of a direct connection to the battery.** Turn the high beam headlamps on. Does the test light illuminate brightly? Yes → Replace the Right Headlamp Bulb. Perform BODY VERIFICATION TEST - VER 1. No → Replace the Front Control Module. Perform BODY VERIFICATION TEST - VER 1.	All
5	Turn the ignition off. **NOTE: Visually inspect the related wiring harness and circuits. Look for any chafed, pierced, pinched, or partially broken wires.** **NOTE: Visually inspect the related wiring harness connectors. Look for broken, bent, pushed out, or corroded terminals.** **Note: Refer to any Technical Service Bulletins (TSB) that may apply.** Were any problems found? Yes → Repair as necessary. Perform BODY VERIFICATION TEST - VER 1. No → Test Complete.	All

Symptom:
RIGHT HIGH BEAM HEADLAMP CIRCUIT SHORTED TO GROUND

POSSIBLE CAUSES
FRONT CONTROL MODULE
RIGHT HEADLAMP
RIGHT HIGH BEAM DRIVER CIRCUIT SHORTED TO GROUND
WIRING PROBLEM
WIRING HARNESS INSPECTION

TEST	ACTION	APPLICABILITY
1	Turn the ignition on. With the DRB, erase the Front Control Module DTC's. Turn the headlamps on. Switch the headlamps between high beam and low beam several times, pausing for 5 seconds in each position. With the DRB, read Front Control Module DTC's. Is this DTC present? Yes → Go To 2 No → Go To 5	All
2	Turn the ignition off. Disconnect the Right Headlamp. Disconnect the Front Control Module from the Intelligent Power Module. Measure the resistance between Ground and the Right High Beam Driver circuit. Is the resistance below 100.0 ohms? Yes → Repair the Right High Beam Driver circuit for a short to ground Perform BODY VERIFICATION TEST - VER 1. No → Go To 3	All
3	Turn the ignition off. Turn the Headlamps off. Install a substitute Headlamp Bulb in place of the Right Headlamp Bulb. Turn the ignition on. With the DRB, erase the Front Control Module DTC's. Turn the headlamps on. Switch the headlamps between high beam and low beam several times, pausing for 5 seconds in each position. With the DRB, read Front Control Module DTC's. Does the DRB display this DTC? Yes → Go To 4 No → Replace the original Right Headlamp Bulb. Perform BODY VERIFICATION TEST - VER 1.	All

RIGHT HIGH BEAM HEADLAMP CIRCUIT SHORTED TO GROUND — Continued

TEST	ACTION	APPLICABILITY
4	Turn the ignition off. Inspect the wiring and connectors associated with the Right High Beam Driver circuit. Were any problems found? Yes → Repair as necessary. Perform BODY VERIFICATION TEST - VER 1. No → Replace the Front Control Module. Perform BODY VERIFICATION TEST - VER 1.	All
5	Turn the ignition off. **NOTE: Visually inspect the related wiring harness and circuits. Look for any chafed, pierced, pinched, or partially broken wires.** **NOTE: Visually inspect the related wiring harness connectors. Look for broken, bent, pushed out, or corroded terminals.** **Note: Refer to any Technical Service Bulletins (TSB) that may apply.** Were any problems found? Yes → Repair as necessary. Perform BODY VERIFICATION TEST - VER 1. No → Test Complete.	All

Symptom:

RIGHT HIGH BEAM HEADLAMP CIRCUIT SHORTED TO VOLTAGE

POSSIBLE CAUSES
FRONT CONTROL MODULE
GROUND CIRCUIT OPEN
HIGH BEAM AND LOW BEAM DRIVERS CIRCUITS SHORTED TOGETHER
RIGHT HEADLAMP
RIGHT HIGH BEAM DRIVER CIRCUIT SHORTED TO VOLTAGE
WIRING PROBLEM
WIRING HARNESS INSPECTION

TEST	ACTION	APPLICABILITY
1	Turn the ignition on. With the DRB, erase the Front Control Module DTC's. Turn the headlamps on. Switch the headlamps between high beam and low beam several times, pausing for 5 seconds in each position. With the DRB, read Front Control Module DTC's. Is this DTC present? Yes → Go To 2 No → Go To 7	All
2	Turn the ignition off. Disconnect the Right Headlamp harness connector. Using a 12-volt test light connected to 12-volts, check the Ground circuit. Does the test light illuminate brightly? Yes → Go To 3 No → Repair the Ground circuit for an open. Perform BODY VERIFICATION TEST - VER 1.	All
3	Turn the ignition off. Disconnect the Right Headlamp harness connector. Disconnect the Front Control Module. Measure the resistance between the Right High Beam Driver circuit and the Right Low Beam Driver circuit at the Right Headlamp harness connector. Is the resistance below 100.0 ohms? Yes → Repair the Right High Beam Driver circuit for a short to the Right Low Beam Driver circuit. Perform BODY VERIFICATION TEST - VER 1. No → Go To 4	All

RIGHT HIGH BEAM HEADLAMP CIRCUIT SHORTED TO VOLTAGE — Continued

TEST	ACTION	APPLICABILITY
4	Turn the ignition off. Disconnect the Right Headlamp harness connector. Disconnect the Front Control Module. Turn the ignition on. Measure the voltage of the Right High Beam Driver circuit. Is the voltage below 1.0 volt? Yes → Go To 5 No → Repair the Right High Beam Driver circuit for a short to voltage. Perform BODY VERIFICATION TEST - VER 1.	All
5	Turn the ignition off. Turn the Headlamps off. Install a substitute Headlamp Bulb in place of the Right Headlamp Bulb. Turn the ignition on. With the DRB, erase the Front Control Module DTC's. Turn the headlamps on. Switch the headlamps between high beam and low beam several times, pausing for 5 seconds in each position. With the DRB, read Front Control Module DTC's. Does the DRB display this DTC? Yes → Go To 6 No → Replace the original Right Headlamp Bulb. Perform BODY VERIFICATION TEST - VER 1.	All
6	Turn the ignition off. Inspect the wiring and connectors associated with the Right High Beam Driver circuit. Were any problems found? Yes → Repair as necessary. Perform BODY VERIFICATION TEST - VER 1. No → Replace the Front Control Module. Perform BODY VERIFICATION TEST - VER 1.	All
7	Turn the ignition off. **NOTE: Visually inspect the related wiring harness and circuits. Look for any chafed, pierced, pinched, or partially broken wires.** **NOTE: Visually inspect the related wiring harness connectors. Look for broken, bent, pushed out, or corroded terminals.** **Note: Refer to any Technical Service Bulletins (TSB) that may apply.** Were any problems found? Yes → Repair as necessary. Perform BODY VERIFICATION TEST - VER 1. No → Test Complete.	All

Symptom:
RIGHT LOW BEAM HEADLAMP CIRCUIT OPEN

POSSIBLE CAUSES
FRONT CONTROL MODULE
GROUND CIRCUIT OPEN
RIGHT HEADLAMP
RIGHT LOW BEAM DRIVER CIRCUIT OPEN
WIRING HARNESS INSPECTION

TEST	ACTION	APPLICABILITY
1	Turn the ignition on. With the DRB, erase the Front Control Module DTC's. Turn the headlamps on. Switch the headlamps between high beam and low beam several times, pausing for 5 seconds in each position. With the DRB, read Front Control Module DTC's. Is this DTC present? Yes → Go To 2 No → Go To 5	All
2	Turn the ignition off. Disconnect the Right Headlamp harness connector. Using a 12-volt test light connected to 12-volts, check the Ground circuit. **NOTE: The test light must illuminate brightly. Compare the brightness to that of a direct connection to the battery.** Does the test light illuminate brightly? Yes → Go To 3 No → Repair the Ground circuit for an open. Perform BODY VERIFICATION TEST - VER 1.	All
3	Turn the ignition off. Disconnect the Right Headlamp. Disconnect the Front Control Module from the Intelligent Power Module. Measure the resistance of the Right Low Beam Driver circuit. Is the resistance below 10.0 ohms? Yes → Go To 4 No → Repair the Right Low Beam Driver circuit for an open. Perform BODY VERIFICATION TEST - VER 1.	All

RIGHT LOW BEAM HEADLAMP CIRCUIT OPEN — Continued

TEST	ACTION	APPLICABILITY
4	Turn the ignition off. Disconnect the Right Headlamp harness connector. Using a 12-volt test light connected to ground, check the Right Low Beam Driver circuit in the Right Headlamp harness connector. **NOTE: The test light must illuminate brightly. Compare the brightness to that of a direct connection to the battery.** Turn the low beam headlamps on. Does the test light illuminate brightly? Yes → Replace the Right Headlamp Bulb. Perform BODY VERIFICATION TEST - VER 1. No → Replace the Front Control Module. Perform BODY VERIFICATION TEST - VER 1.	All
5	Turn the ignition off. **NOTE: Visually inspect the related wiring harness and circuits. Look for any chafed, pierced, pinched, or partially broken wires.** **NOTE: Visually inspect the related wiring harness connectors. Look for broken, bent, pushed out, or corroded terminals.** **Note: Refer to any Technical Service Bulletins (TSB) that may apply.** Were any problems found? Yes → Repair as necessary. Perform BODY VERIFICATION TEST - VER 1. No → Test Complete.	All

Symptom:
RIGHT LOW BEAM HEADLAMP CIRCUIT SHORTED TO GROUND

POSSIBLE CAUSES
FRONT CONTROL MODULE
RIGHT HEADLAMP
RIGHT LOW BEAM DRIVER CIRCUIT SHORTED TO GROUND
WIRING PROBLEM
WIRING HARNESS INSPECTION

TEST	ACTION	APPLICABILITY
1	Turn the ignition on. With the DRB, erase the Front Control Module DTC's. Turn the headlamps on. Switch the headlamps between high beam and low beam several times, pausing for 5 seconds in each position. With the DRB, read Front Control Module DTC's. Is this DTC present? Yes → Go To 2 No → Go To 5	All
2	Turn the ignition off. Disconnect the Right Headlamp. Disconnect the Front Control Module from the Intelligent Power Module. Measure the resistance between Ground and the Right Low Beam Driver circuit. Is the resistance below 100.0 ohms? Yes → Repair the Right Low Beam Driver circuit for a short to ground Perform BODY VERIFICATION TEST - VER 1. No → Go To 3	All
3	Turn the ignition off. Turn the Headlamps off. Install a substitute Headlamp Bulb in place of the Right Headlamp Bulb. Turn the ignition on. With the DRB, erase the Front Control Module DTC's. Turn the headlamps on. Switch the headlamps between high beam and low beam several times, pausing for 5 seconds in each position. With the DRB, read Front Control Module DTC's. Does the DRB display this DTC? Yes → Go To 4 No → Replace the original Right Headlamp Bulb. Perform BODY VERIFICATION TEST - VER 1.	All

RIGHT LOW BEAM HEADLAMP CIRCUIT SHORTED TO GROUND — Continued

TEST	ACTION	APPLICABILITY
4	Turn the ignition off. Inspect the wiring and connectors associated with the Right Low Beam Driver circuit. Were any problems found? Yes → Repair as necessary. Perform BODY VERIFICATION TEST - VER 1. No → Replace the Front Control Module. Perform BODY VERIFICATION TEST - VER 1.	All
5	Turn the ignition off. **NOTE: Visually inspect the related wiring harness and circuits. Look for any chafed, pierced, pinched, or partially broken wires.** **NOTE: Visually inspect the related wiring harness connectors. Look for broken, bent, pushed out, or corroded terminals.** **Note: Refer to any Technical Service Bulletins (TSB) that may apply.** Were any problems found? Yes → Repair as necessary. Perform BODY VERIFICATION TEST - VER 1. No → Test Complete.	All

Symptom:

RIGHT LOW BEAM HEADLAMP CIRCUIT SHORTED TO VOLTAGE

POSSIBLE CAUSES
FRONT CONTROL MODULE
GROUND CIRCUIT OPEN
HIGH BEAM AND LOW BEAM DRIVERS CIRCUITS SHORTED TOGETHER
RIGHT HEADLAMP
RIGHT LOW BEAM DRIVER CIRCUIT SHORTED TO VOLTAGE
WIRING PROBLEM
WIRING HARNESS INSPECTION

TEST	ACTION	APPLICABILITY
1	Turn the ignition on. With the DRB, erase the Front Control Module DTC's. Turn the headlamps on. Switch the headlamps between high beam and low beam several times, pausing for 5 seconds in each position. With the DRB, read Front Control Module DTC's. Is this DTC present? Yes → Go To 2 No → Go To 7	All
2	Turn the ignition off. Disconnect the Right Headlamp harness connector. Using a 12-volt test light connected to 12-volts, check the Ground circuit. Does the test light illuminate brightly? Yes → Go To 3 No → Repair the Ground circuit for an open. Perform BODY VERIFICATION TEST - VER 1.	All
3	Turn the ignition off. Disconnect the Right Headlamp harness connector. Disconnect the Front Control Module. Measure the resistance between the Right High Beam Driver circuit and the Right Low Beam Driver circuit at the Right Headlamp harness connector. Is the resistance below 100.0 ohms? Yes → Repair the Right High Beam Driver circuit for a short to the Right Low Beam Driver circuit. Perform BODY VERIFICATION TEST - VER 1. No → Go To 4	All

RIGHT LOW BEAM HEADLAMP CIRCUIT SHORTED TO VOLTAGE — Continued

TEST	ACTION	APPLICABILITY
4	Turn the ignition off. Disconnect the Right Headlamp harness connector. Disconnect the Front Control Module. Turn the ignition on. Measure the voltage of the Right Low Beam Driver circuit. Is the voltage below 1.0 volt? Yes → Go To 5 No → Repair the Right Low Beam Driver circuit for a short to voltage. Perform BODY VERIFICATION TEST - VER 1.	All
5	Turn the ignition off. Turn the Headlamps off. Install a substitute Headlamp Bulb in place of the Right Headlamp Bulb. Turn the ignition on. With the DRB, erase the Front Control Module DTC's. Turn the headlamps on. Switch the headlamps between high beam and low beam several times, pausing for 5 seconds in each position. With the DRB, read Front Control Module DTC's. Does the DRB display this DTC? Yes → Go To 6 No → Replace the original Right Headlamp Bulb. Perform BODY VERIFICATION TEST - VER 1.	All
6	Turn the ignition off. Inspect the wiring and connectors associated with the Right Low Beam Driver circuit. Were any problems found? Yes → Repair as necessary. Perform BODY VERIFICATION TEST - VER 1. No → Replace the Front Control Module. Perform BODY VERIFICATION TEST - VER 1.	All
7	Turn the ignition off. **NOTE: Visually inspect the related wiring harness and circuits. Look for any chafed, pierced, pinched, or partially broken wires.** **NOTE: Visually inspect the related wiring harness connectors. Look for broken, bent, pushed out, or corroded terminals.** **Note: Refer to any Technical Service Bulletins (TSB) that may apply.** Were any problems found? Yes → Repair as necessary. Perform BODY VERIFICATION TEST - VER 1. No → Test Complete.	All

Symptom:
RIGHT REAR TURN SIGNAL OUTPUT OPEN

When Monitored and Set Condition:

RIGHT REAR TURN SIGNAL OUTPUT OPEN

When Monitored: Ignition On.

Set Condition: When output voltage status is LOW.

POSSIBLE CAUSES
INTERMITTENT CONDITION
GROUND CIRCUIT
TURN SIGNAL LAMP
RIGHT REAR TURN SIGNAL DRIVER CIRCUIT OPEN
BODY CONTROL MODULE

TEST	ACTION	APPLICABILITY
1	Turn the ignition on. With the DRBIII®, clear all BCM DTC's. Actuate the Turn Signals. With the DRBIII®, read the DTC information. Does the DRBIII® read: Right Rear Turn Signal Output Open? Yes → Go To 2 No → The condition that caused the symptom is currently not present. Inspect the related wiring for a possible intermittent condition. Look for any chafed, pierced,pinched, or partially broken wires. Perform BODY VERIFICATION TEST - VER 1.	All
2	Turn the ignition off. Disconnect the Right Rear Turn Signal harness connector. Using a 12-volt test light connected to 12-volts, check the ground circuit. Does the test light illuminate brightly? Yes → Go To 3 No → Repair the Ground Circuit. Perform BODY VERIFICATION TEST - VER 1.	All
3	Turn the ignition off. Disconnect the Right Rear Turn Signal Lamp connector. Turn the ignition on. Turn the Right Turn Signal on. Using a 12-volt test light connected to ground, check the Right Rear Turn Signal Output circuit. Does the test light illuminate brightly? Yes → Replace the Turn Signal Lamp. Perform BODY VERIFICATION TEST - VER 1. No → Go To 4	All

RIGHT REAR TURN SIGNAL OUTPUT OPEN — Continued

TEST	ACTION	APPLICABILITY
4	Turn the ignition off. Disconnect the Body Control Module C2 connector. Measure the resistance of the Right Rear Turn Signal Driver Circuit to ground. Is the resistance above 5.0 ohms? Yes → Repair the Right Rear Turn Signal Driver Circuit for an open condition. Perform BODY VERIFICATION TEST - VER 1. No → Replace the Body Control Module. Perform BODY VERIFICATION TEST - VER 1.	All

Symptom:
RIGHT REAR TURN SIGNAL OUTPUT SHORT

When Monitored and Set Condition:

RIGHT REAR TURN SIGNAL OUTPUT SHORT

When Monitored: Anytime the BCM is active.

Set Condition: When output voltage status is Low.

POSSIBLE CAUSES
INTERMITTENT CONDITION
RIGHT REAR TURN SIGNAL DRIVER CIRCUIT SHORT TO GROUND
TURN SIGNAL LAMP
BODY CONTROL MODULE

TEST	ACTION	APPLICABILITY
1	Turn the ignition on. With the DRBIII®, clear all BCM DTC's. Actuate the Turn Signals. With the DRBIII®, read the DTC information. Does the DRBIII® read: Right Rear Turn Signal Output Short? Yes → Go To 2 No → The condition that caused the symptom is currently not present. Inspect the related wiring for a possible intermittent condition. Look for any chafed, pierced,pinched, or partially broken wires. Perform BODY VERIFICATION TEST - VER 1.	All
2	Turn the ignition off. Disconnect the Right Rear Turn Signal Lamp connector. Disconnect the BCM harness connector. Measure the resistance between the Right Rear Turn Signal Driver circuit and ground. Is the resistance below 100.0 ohms? Yes → Repair the Right Rear Turn Signal Driver circuit for a short to ground. Perform BODY VERIFICATION TEST - VER 1. No → Go To 3	All

RIGHT REAR TURN SIGNAL OUTPUT SHORT — Continued

TEST	ACTION	APPLICABILITY
3	Turn the ignition off. Disconnect the Right Rear Turn Signal Lamp connector. Turn the ignition on. Turn the Right Turn Signal on. Using a 12-volt test light connected to ground, check the Right Rear Turn Signal Driver circuit. Does the test light illuminate brightly? Yes → Replace the Turn Signal Lamp. Perform BODY VERIFICATION TEST - VER 1. No → Replace the Body Control Module. Perform BODY VERIFICATION TEST - VER 1.	All

Symptom:
RIGHT SIDE PARK LAMP OPEN

When Monitored and Set Condition:

RIGHT SIDE PARK LAMP OPEN

When Monitored: Anytime the FCM is active.

Set Condition: When B+ voltage is below 10.0 volts.

POSSIBLE CAUSES
INTERMITTENT CONDITION
GROUND CIRCUIT
PARK LAMP
PARK LAMP FUSE #3
PARK LAMP OUTPUT CIRCUIT OPEN
PARK LAMP RELAY
FRONT CONTROL MODULE
INTELLIGENT POWER MODULE

TEST	ACTION	APPLICABILITY
1	Turn the ignition on. With the DRBIII®, clear all IPM DTC's. Turn the Park Lamps on. With the DRBIII®, read the DTC information. Does the DRBIII® read: Right Side Park Lamp Fuse Outage? Yes → Go To 2 No → The condition that caused the symptom is currently not present. Inspect the related wiring for a possible intermittent condition. Look for any chafed, pierced,pinched, or partially broken wires. Perform BODY VERIFICATION TEST - VER 1.	All
2	Turn the ignition off Disconnect the right front Park Lamp harness connector. Using a 12-volt test light connected to 12-volts, check the ground circuit. Does the test light illuminate brightly? Yes → Go To 3 No → Repair the Ground Circuit. Perform BODY VERIFICATION TEST - VER 1.	All

RIGHT SIDE PARK LAMP OPEN — Continued

TEST	ACTION	APPLICABILITY
3	Turn the ignition off. Disconnect the right front park lamp connector. Turn the ignition on. Turn the Park Lamps on. Using a 12-volt test light connected to ground, check the Park Lamp Output circuit. Does the test light illuminate brightly? Yes → Replace the Park Lamp. Perform BODY VERIFICATION TEST - VER 1. No → Go To 4	All
4	Turn the ignition off. Check the IPM Park Lamp Fuse #3. Is the Fuse open? Yes → Replace the Park Lamp Fuse #3. Perform BODY VERIFICATION TEST - VER 1. No → Go To 5	All
5	Turn the ignition off. Install a known good relay in place of the Park Lamp Relay. Turn the Park Lamps on. Do the Park Lamps operate normally? Yes → Replace the Park Lamp Relay. Perform BODY VERIFICATION TEST - VER 1. No → Go To 6	All
6	Turn the ignition off. Disconnect the IPM harness connector. Measure the resistance of the Park Lamp Output circuit to ground. Is the resistance above 5.0 ohms? Yes → Repair the Park Lamp Output circuit for an open condition. Perform BODY VERIFICATION TEST - VER 1. No → Go To 7	All
7	Turn the ignition off. Remove the Park Lamp Relay. Measure the voltage of the Fused B+ circuit of the Park Lamp Relay. Is the voltage above 10.0 volts? Yes → Replace the Front Control Module. Perform BODY VERIFICATION TEST - VER 1. No → Replace the Intelligent Power Module. Perform BODY VERIFICATION TEST - VER 1.	All

Symptom:
TURN SIGNAL SWITCH INPUT OPEN

When Monitored and Set Condition:

TURN SIGNAL SWITCH INPUT OPEN

When Monitored: Ignition on.

Set Condition: When voltage is below 4.8 volts.

POSSIBLE CAUSES
INTERMITTENT CONDITION
MULTIFUNCTION SWITCH
TURN SIGNAL SWITCH MUX CIRCUIT OPEN
MULTIFUNCTION SWITCH MUX RETURN CIRCUIT OPEN
BODY CONTROL MODULE

TEST	ACTION	APPLICABILITY
1	Turn the ignition on. With the DRBIII®, clear all BCM DTC's. Actuate the turn signals. With the DRBIII®, read the DTC information. Does the DRBIII® read: Turn Signal Switch Input Open? Yes → Go To 2 No → The condition that caused the symptom is currently not present. Inspect the related wiring for a possible intermittent condition. Look for any chafed, pierced,pinched, or partially broken wires. Perform BODY VERIFICATION TEST - VER 1.	All
2	Turn the ignition off. Disconnect the Multifunction Switch harness connector. Connect a jumper wire between the Turn Signal Switch MUX circuit and the Multifunction Switch MUX Return circuit in the Multifunction Switch connector. Turn the ignition on. With the DRBIII®, read the Multifunction Switch voltage. Is the display voltage below 0.5 volts? Yes → Replace the Multifunction Switch. Perform BODY VERIFICATION TEST - VER 1. No → Go To 3	All

TURN SIGNAL SWITCH INPUT OPEN — Continued

TEST	ACTION	APPLICABILITY
3	Turn the ignition off. Disconnect the applicable Body Control Module harness connector. Disconnect the Multifunction Switch harness connector. Measure the resistance of the Turn Signal Switch MUX circuit from the Body Control Module connector to the Multifunction Switch harness connector. Is the resistance above 5.0 ohms? Yes → Repair the Turn Signal Switch MUX circuit for an open. Perform BODY VERIFICATION TEST - VER 1. No → Go To 4	All
4	Turn the ignition off. Disconnect the applicable Body Control Module harness connector. Disconnect the Multifunction Switch harness connector. Measure the resistance of the Multifunction Switch MUX Return circuit from the Body Control Module connector to the Multifunction Switch harness connector. Is the resistance above 5.0 ohms? Yes → Repair the Multifunction Switch MUX Return circuit for an open. Perform BODY VERIFICATION TEST - VER 1. No → Replace the Body Control Module. Perform BODY VERIFICATION TEST - VER 1.	All

Symptom:
TURN SIGNAL SWITCH INPUT SHORT

When Monitored and Set Condition:

TURN SIGNAL SWITCH INPUT SHORT

When Monitored: Ignition on.

Set Condition: When Input voltage falls below 0.196 volts for 62.5 msec..

POSSIBLE CAUSES
INTERMITTENT CONDITION
MULTIFUNCTION SWITCH
TURN SIGNAL SWITCH MUX CIRCUIT SHORT TO GROUND
TURN SIGNAL SWITCH MUX SHORT TO MUX RETURN CIRCUIT.
MULTIFUNCTION SWITCH MUX RETURN CIRCUIT SHORT TO GROUND
BODY CONTROL MODULE

TEST	ACTION	APPLICABILITY
1	Turn the ignition on. With the DRBIII®, clear all BCM DTC's. Actuate the Turn Signals on. With the DRBIII®, read the DTC information. Does the DRBIII® read: Turn Signal Switch Input Short? Yes → Go To 2 No → The condition that caused the symptom is currently not present. Inspect the related wiring for a possible intermittent condition. Look for any chafed, pierced,pinched, or partially broken wires. Perform BODY VERIFICATION TEST - VER 1.	All
2	Turn the ignition off. Disconnect the Multifunction Switch harness connector. Turn the ignition on. With the DRBIII®, read the Multifunction Switch voltage. Is the voltage above 4.8 volts? Yes → Replace the Multifunction Switch. Perform BODY VERIFICATION TEST - VER 1. No → Go To 3	All
3	Turn the ignition off. Disconnect the Body Control Module harness connector. Disconnect the Multifunction Switch harness connector. Measure the resistance between the Turn Signal Switch MUX circuit and ground. Is the resistance below 5.0 ohms? Yes → Repair the Turn Signal Switch MUX circuit for a short to ground. Perform BODY VERIFICATION TEST - VER 1. No → Go To 4	All

TURN SIGNAL SWITCH INPUT SHORT — Continued

TEST	ACTION	APPLICABILITY
4	Turn the ignition off. Disconnect the applicable Body Control Module harness connector. Disconnect the Multifunction Switch harness connector. Measure the resistance between the Multifunction Switch MUX Return circuit and the Turn Signal Switch MUX circuit. Is the resistance below 5.0 ohms? Yes → Repair the Turn Signal Switch MUX circuit for a short to the Multifunction Switch MUX Return circuit. Perform BODY VERIFICATION TEST - VER 1. No → Go To 5	All
5	Turn the ignition off. Disconnect the applicable Body Control Module harness connector. Disconnect the Multifunction Switch harness connector. Measure the resistance between the Multifunction Switch MUX Return circuit and ground. Is the resistance below 5.0 ohms? Yes → Repair the Multifunction Switch MUX Return circuit for a short to ground. Perform BODY VERIFICATION TEST - VER 1. No → Replace the Body Control Module. Perform BODY VERIFICATION TEST - VER 1.	All

Symptom List:

A/C SWITCH FAULT (ACTIVE) - MTC
CHECKSUM FAILURE (ACTIVE) - MTC
DEFOG SWITCH FAULT (ACTIVE) - MTC
POWER SWITCH FAULT (ACTIVE) - MTC
REAR WIPER WASHER SWITCH FAULT (ACTIVE) - MTC
RECIRC SWITCH FAULT (ACTIVE) - MTC

Test Note: All symptoms listed above are diagnosed using the same tests. The title for the tests will be A/C SWITCH FAULT (ACTIVE) - MTC.

When Monitored and Set Condition:

A/C SWITCH FAULT (ACTIVE) - MTC

When Monitored: With the ignition on.

Set Condition: This DTC will set if the A/C switch stays closed for 10 minutes.

CHECKSUM FAILURE (ACTIVE) - MTC

When Monitored: With the ignition on.

Set Condition: This DTC will set if the calculated check sum does not match the stored value.

DEFOG SWITCH FAULT (ACTIVE) - MTC

When Monitored: With the ignition on.

Set Condition: This DTC will set if the EBL switch stays closed for 10 minutes.

POWER SWITCH FAULT (ACTIVE) - MTC

When Monitored: With the ignition on.

Set Condition: This DTC will set if the Power switch stays closed for 10 minutes.

REAR WIPER WASHER SWITCH FAULT (ACTIVE) - MTC

When Monitored: With the ignition on.

Set Condition: This DTC will set if the Rear Wiper/Washer switch stays closed for 10 minutes.

RECIRC SWITCH FAULT (ACTIVE) - MTC

When Monitored: With the ignition on.

Set Condition: This DTC will set if the Recirc switch stays closed for 10 minutes.

A/C SWITCH FAULT (ACTIVE) - MTC — Continued

POSSIBLE CAUSES
A/C - HEATER CONTROL MODULE

TEST	ACTION	APPLICABILITY
1	View repair Repair Replace the A/C - Heater Control Module in accordance with the Service Information. Perform BODY VERIFICATION TEST - VER 1.	All

Symptom List:

A/C SWITCH FAULT (STORED) - MTC
BACKLIGHT DIMMING RX FAILURE (STORED) - MTC
BLEND OVERCURRENT (STORED) - MTC
CHECKSUM FAILURE (STORED) - MTC
DEFOG SWITCH FAULT (STORED) - MTC
EVAPORATOR TEMPERATURE SENSOR CIRCUIT OPEN (STORED) - MTC
EVAPORATOR TEMPERATURE SENSOR CIRCUIT SHORT (STORED) - MTC
LOOPBACK TEST FAILURE (STORED) - MTC
MODE OVERCURRENT (STORED) - MTC
NO FUEL LEVEL MESSAGE RECEIVED (STORED) - MTC
PCM COMMUNICATION FAILURE (STORED) - MTC
POWER SWITCH FAULT (STORED) - MTC
REAR BLEND OVERCURRENT (STORED) - MTC
REAR BLEND POT CIRCUIT OPEN (STORED) - MTC
REAR BLEND POT CIRCUIT SHORT (STORED) - MTC
REAR MODE OVERCURRENT (STORED) - MTC
REAR WIPER WASHER SWITCH FAULT (STORED) - MTC
RECIRC OVERCURRENT (STORED) - MTC
RECIRC SWITCH FAULT (STORED) - MTC
TX FAILURE (STORED) - MTC
VEHICLE ODOMETER FAILURE (STORED) - MTC
ZONE OVERCURRENT (STORED) - MTC

Test Note: All symptoms listed above are diagnosed using the same tests. The title for the tests will be A/C SWITCH FAULT (STORED) - MTC.

When Monitored and Set Condition:

A/C SWITCH FAULT (STORED) - MTC

When Monitored: With the ignition on.

Set Condition: This DTC will set if the A/C switch stays closed for 10 minutes.

BACKLIGHT DIMMING RX FAILURE (STORED) - MTC

When Monitored: With the ignition on.

Set Condition: If the A/C - Heater Control Module does not receive the dimming function message from the BCM for more than 5 seconds, then the A/C - Heater Control Module LEDs will default to full brightness and the DTC will set.

A/C SWITCH FAULT (STORED) - MTC — Continued

BLEND OVERCURRENT (STORED) - MTC

When Monitored: When actuator movement is requested.

Set Condition: This DTC will set if the A/C - Heater Control Module detects an excessive current draw on any of the door driver circuits while attempting to drive the passenger blend door actuator. Only one overcurrent DTC can set per ignition cycle.

CHECKSUM FAILURE (STORED) - MTC

When Monitored: With the ignition on.

Set Condition: This DTC will set if the calculated check sum does not match the stored value.

DEFOG SWITCH FAULT (STORED) - MTC

When Monitored: With the ignition on.

Set Condition: This DTC will set if the EBL switch stays closed for 10 minutes.

EVAPORATOR TEMPERATURE SENSOR CIRCUIT OPEN (STORED) - MTC

When Monitored: With the ignition on.

Set Condition: This DTC will set if the A/C - Heater Control Module sees abnormally high voltage on the Evaporator Temperature Sensor Signal circuit.

EVAPORATOR TEMPERATURE SENSOR CIRCUIT SHORT (STORED) - MTC

When Monitored: With the ignition on.

Set Condition: This DTC will set if the A/C - Heater Control Module sees abnormally low voltage on the Evaporator Temperature Sensor Signal circuit.

LOOPBACK TEST FAILURE (STORED) - MTC

When Monitored: When the A/C - Heater Control Module executes an internal loopback test.

Set Condition: If the A/C - Heater Control Module fails to send a message, or none of the expected messages arrive for 5 seconds, an internal loopback test is executed. If the internal loopback test fails, the DTC will set.

MODE OVERCURRENT (STORED) - MTC

When Monitored: When actuator movement is requested.

Set Condition: This DTC will set if the A/C - Heater Control Module detects an excessive current draw on any of the door driver circuits while attempting to drive this actuator. Only one overcurrent DTC can set per ignition cycle.

NO FUEL LEVEL MESSAGE RECEIVED (STORED) - MTC

When Monitored: With the ignition on.

Set Condition: This DTC will set if the A/C - Heater Control Module does not receive the Fuel Level message from the PCM for more than 5 seconds.

A/C SWITCH FAULT (STORED) - MTC — Continued

PCM COMMUNICATION FAILURE (STORED) - MTC

When Monitored: With the ignition on.

Set Condition: This DTC will set if the A/C - Heater Control Module does not receive the Fuel message from the PCM for more than 5 seconds.

POWER SWITCH FAULT (STORED) - MTC

When Monitored: With the ignition on.

Set Condition: This DTC will set if the Power switch stays closed for 10 minutes.

REAR BLEND OVERCURRENT (STORED) - MTC

When Monitored: When actuator movement is requested.

Set Condition: This DTC will set if the A/C - Heater Control Module detects an excessive current draw on any of the door driver circuits while attempting to drive this actuator. Only one overcurrent DTC can set per ignition cycle.

REAR BLEND POT CIRCUIT OPEN (STORED) - MTC

When Monitored: With the ignition on.

Set Condition: This DTC will set if the A/C - Heater Control Module sees voltage above 4.88 volts on the Rear Temperature Feedback Signal circuit.

REAR BLEND POT CIRCUIT SHORT (STORED) - MTC

When Monitored: When the ignition is on.

Set Condition: This DTC will set if the A/C - Heater Control Module sees voltage below 0.25 volts on the Rear Temperature Feedback Signal circuit.

REAR MODE OVERCURRENT (STORED) - MTC

When Monitored: When actuator movement is requested.

Set Condition: This DTC will set if the A/C - Heater Control Module detects an excessive current draw on any of the door driver circuits while attempting to drive this actuator. Only one overcurrent DTC can set per ignition cycle.

REAR WIPER WASHER SWITCH FAULT (STORED) - MTC

When Monitored: With the ignition on.

Set Condition: This DTC will set if the Rear Wiper/Washer switch stays closed for 10 minutes.

RECIRC OVERCURRENT (STORED) - MTC

When Monitored: When actuator movement is requested.

Set Condition: This DTC will set if the A/C - Heater Control Module detects an excessive current draw on any of the door driver circuits while attempting to drive this actuator. Only one overcurrent DTC can set per ignition cycle.

A/C SWITCH FAULT (STORED) - MTC — Continued

RECIRC SWITCH FAULT (STORED) - MTC

When Monitored: With the ignition on.

Set Condition: This DTC will set if the Recirc switch stays closed for 10 minutes.

TX FAILURE (STORED) - MTC

When Monitored: When the ignition is on.

Set Condition: This DTC will set if the A/C - Heater Control Module is unable to send a message.

VEHICLE ODOMETER FAILURE (STORED) - MTC

When Monitored: With the ignition on.

Set Condition: This DTC will set if the A/C - Heater Control Module does not receive the Vehicle Odometer message from the PCM for more than 5 seconds.

ZONE OVERCURRENT (STORED) - MTC

When Monitored: When actuator movement is requested.

Set Condition: This DTC will set if the A/C - Heater Control Module detects an excessive current draw on any of the door driver circuits while attempting to drive the driver (zone) blend door actuator. Only one overcurrent DTC can set per ignition cycle.

POSSIBLE CAUSES
CHECK FOR ACTIVE HVAC DTCS AND SYSTEM TESTS FAULT MESSAGES
STORED CODE(S) TEST COMPLETE

A/C SWITCH FAULT (STORED) - MTC — Continued

TEST	ACTION	APPLICABILITY
1	**CAUTION: The evaporator temperature must be above 12.7°C (55°F) and the work area ambient temperature must be above 21.1°C (70°F) to test the A/C system operation.** **NOTE: Active codes must be resolved before diagnosing stored codes.** **NOTE: Anytime a DTC becomes active, or a Cooldown Test fault message, Actuator Circuit Test fault message, or HVAC Door Recalibration fault message is displayed, proceed to the conclusion question.** **NOTE: If multiple codes appear, diagnose those that relate to a short circuit first.** Start the engine. On RG vehicles, press the A/C - Heater Control power switch on. Turn the mode select control to the panel position. Verify that the front blower motor and, if equipped, rear blower motor operates correctly in all speeds from each control. Diagnose and repair all blower related faults before proceeding with this test. Turn the front blower motor control to the high speed position. **NOTE: Before actuating the AC Cooldown Test, verify that the A/C compressor is not running. If the compressor is running, turn the A/C off and allow the evaporator to warm up before proceeding with the test.** With the DRBIII® in HVAC, System Tests, actuate the AC Cooldown Test. Turn the front blower motor control to the low speed position. If equipped, turn the rear blower motor control to the rear position. Set the passenger blend control to the full cold position. If equipped, set the zone/driver blend control to the full cold position. If equipped, on the Rear Blower Rear Control, set the rear blend/mode control to the full cold position. Monitor the DRBIII® for active HVAC DTCs while performing the following test steps. Turn the mode select control to the defrost position, wait 30 seconds, and then turn it back to the panel position. Press the recirculation mode switch on, wait 30 seconds, and then press it off. Press the A/C mode switch on, wait 30 seconds, and then press it off. Press the rear window defogger switch on, wait 30 seconds, and then press it off. Move the passenger blend control from full cold to full hot, wait 30 seconds, and then move it back to full cold. If equipped, move the zone/driver blend control from full cold to full hot, wait 30 seconds, and then move it back to full cold. If equipped, on the Rear Blower Rear Control, move the rear blend/mode control from full cold to full hot, wait 30 seconds, and then move it back to full cold. On RS vehicles, press and hold the Rear Wiper/Washer switch for approximately 3 seconds, and then release the switch. On RS vehicles, press the Rear Wiper/Washer switch on, wait 30 seconds, and then press it off. With the DRBIII® in HVAC, System Tests, actuate the Actuator Circuit Test. With the DRBIII® in HVAC, System Tests, actuate the HVAC Door Recalibration Test. Does the DRBIII® display any active HVAC DTC(s) or System Tests fault message(s)? Yes → Return to the symptom list and choose the symptom(s). Perform BODY VERIFICATION TEST - VER 1. No → No problem found at this time. Perform BODY VERIFICATION TEST - VER 1.	All

Symptom List:

ACT CKT TEST PASSED, OVERCURRENT DTCS ACTIVE - MTC
BLEND CIRCUIT SHORTED TO GROUND - MTC
BLEND CIRCUIT SHORTED TO IGN OR BATT - MTC
COMMON DRIVER SHORTED TO GROUND - MTC
COMMON DRIVER SHORTED TO IGN OR BATT - MTC
MODE CIRCUIT SHORTED TO GROUND - MTC
MODE CIRCUIT SHORTED TO IGN OR BATT - MTC
REAR BLEND CIRCUIT SHORTED TO GROUND - MTC
REAR BLEND CIRCUIT SHORTED TO IGN OR BATT - MTC
REAR MODE CIRCUIT SHORTED TO GROUND - MTC
REAR MODE CIRCUIT SHORTED TO IGN OR BATT - MTC
RECIRC CIRCUIT SHORTED TO GROUND - MTC
RECIRC CIRCUIT SHORTED TO IGN OR BATT - MTC
SHORT TOO COMPLEX - MTC
ZONE CIRCUIT SHORTED TO GROUND - MTC
ZONE CIRCUIT SHORTED TO IGN OR BATT - MTC

Test Note: All symptoms listed above are diagnosed using the same tests. The title for the tests will be ACT CKT TEST PASSED, OVERCURRENT DTCS ACTIVE - MTC.

When Monitored and Set Condition:

ACT CKT TEST PASSED, OVERCURRENT DTCS ACTIVE - MTC

When Monitored: When the Actuator Circuit Test is executed.

Set Condition: If two or more drivelines shorted together.

BLEND CIRCUIT SHORTED TO GROUND - MTC

When Monitored: When the Actuator Circuit Test is executed.

Set Condition: This message will set if the A/C - Heater Control detects a short low on the Passenger Blend Door Driver circuit.

BLEND CIRCUIT SHORTED TO IGN OR BATT - MTC

When Monitored: When the Actuator Circuit Test is executed.

Set Condition: This message will set if the A/C - Heater Control detects a short high on the Passenger Blend Door Driver circuit.

COMMON DRIVER SHORTED TO GROUND - MTC

When Monitored: When the Actuator Circuit Test is executed.

Set Condition: This message will set if the A/C - Heater Control detects a short low on the Common Door Driver circuit.

ACT CKT TEST PASSED, OVERCURRENT DTCS ACTIVE - MTC — Continued

COMMON DRIVER SHORTED TO IGN OR BATT - MTC

When Monitored: When the Actuator Circuit Test is executed.

Set Condition: This message will set if the A/C - Heater Control detects a short high on the Common Door Driver circuit.

MODE CIRCUIT SHORTED TO GROUND - MTC

When Monitored: When the Actuator Circuit Test is executed.

Set Condition: This message will set if the A/C - Heater Control detects a short low on the Mode Door Driver circuit.

MODE CIRCUIT SHORTED TO IGN OR BATT - MTC

When Monitored: When the Actuator Circuit Test is executed.

Set Condition: This message will set if the A/C - Heater Control detects a short high on the Mode Door Driver circuit.

REAR BLEND CIRCUIT SHORTED TO GROUND - MTC

When Monitored: When the Actuator Circuit Test is executed.

Set Condition: This message will set if the A/C - Heater Control detects a short low on the Rear Blend Door Driver circuit.

REAR BLEND CIRCUIT SHORTED TO IGN OR BATT - MTC

When Monitored: When the Actuator Circuit Test is executed.

Set Condition: This message will set if the A/C - Heater Control detects a short high on the Rear Blend Door Driver circuit.

REAR MODE CIRCUIT SHORTED TO GROUND - MTC

When Monitored: When the Actuator Circuit Test is executed.

Set Condition: This message will set if the A/C - Heater Control detects a short low on the Rear Mode Door Driver circuit.

REAR MODE CIRCUIT SHORTED TO IGN OR BATT - MTC

When Monitored: When the Actuator Circuit Test is executed.

Set Condition: This message will set if the A/C - Heater Control detects a short high on the Rear Mode Door Driver circuit.

RECIRC CIRCUIT SHORTED TO GROUND - MTC

When Monitored: When the Actuator Circuit Test is executed.

Set Condition: This message will set if the A/C - Heater Control detects a short low on the Recirculation Door Driver circuit.

ACT CKT TEST PASSED, OVERCURRENT DTCS ACTIVE - MTC — Continued

RECIRC CIRCUIT SHORTED TO IGN OR BATT - MTC

When Monitored: When the Actuator Circuit Test is executed.

Set Condition: This message will set if the A/C - Heater Control detects a short high on the Recirculation Door Driver circuit.

SHORT TOO COMPLEX - MTC

When Monitored: When the Actuator Circuit Test is executed.

Set Condition: This message will set if the A/C - Heater Control detects more than three drivers being shorted in the same direction (for example, four drivers, all shorted to ground) or if two or more drivers are shorted with at least one driver shorted to ignition/battery and one driver shorted to ground.

ZONE CIRCUIT SHORTED TO GROUND - MTC

When Monitored: When the Actuator Circuit Test is executed.

Set Condition: This message will set if the A/C - Heater Control detects a short low on the Driver (Zone) Blend Door Driver circuit.

ZONE CIRCUIT SHORTED TO IGN OR BATT - MTC

When Monitored: When the Actuator Circuit Test is executed.

Set Condition: This message will set if the A/C - Heater Control detects a short high on the Driver (Zone) Blend Door Driver circuit.

POSSIBLE CAUSES
DOOR DRIVER CIRCUIT SHORTED LOW
DOOR ACTUATOR SHORTED
DOOR DRIVER CIRCUIT SHORTED HIGH
A/C - HEATER CONTROL MODULE
INTERMITTENT WIRING PROBLEM
DOOR DRIVER CIRCUITS SHORTED HIGH
DOOR DRIVER CIRCUITS SHORTED LOW
DOOR DRIVER CIRCUITS SHORTED TOGETHER
DOOR DRIVER CIRCUITS SHORTED TO COMMON DOOR DRIVER CIRCUIT
DOOR ACTUATORS SHORTED
A/C - HEATER CONTROL MODULE
INTERMITTENT WIRING PROBLEM

ACT CKT TEST PASSED, OVERCURRENT DTCS ACTIVE - MTC — Continued

TEST	ACTION	APPLICABILITY
1	**CAUTION: Shorted rear door driver circuits can cause additional Actuator Circuit Test messages to set for circuits where no condition exists to cause a fault.** **CAUTION: To ensure a proper diagnosis, repair all Short Too Complex messages first, all rear door driver ckt related msgs second, all common door driver ckt related msgs third, and all front door driver ckt related msgs last.** **CAUTION: The DRBIII® can display up to three Actuator Circuit Test messages at a time. After repairing each Actuator Circuit Test message, cycle the ignition switch, then rerun the Actuator Circuit Test to ensure no new messages exist.** **CAUTION: If Overcurrent DTCs are active and the DRBIII ® displays Actuator Circuit Test Passed, proceed to Act Ckt Test Pass, Overcurrent DTCs Activ when asked Which Actuator Circuit Test Message Is Present.** Which Actuator Circuit Test message is present? XXX Driver/Ckt Short to Gnd Go To 2 XXX Driver/Ckt Short to Ign or Batt Go To 4 Short Too Complex Go To 6 XXX Drv/Ckt Short to Gnd & to Ign or Bat Go To 8 Act Ckt Test Pass, Overcurrent DTCs Acti Go To 8	All
2	Turn the ignition off. Disconnect the A/C - Heater Control C1 harness connector. Measure the resistance between ground and the applicable door driver circuit. Is the resistance below 10K ohms? Yes → Repair the door driver circuit for a short to ground. Perform BODY VERIFICATION TEST - VER 1. No → Go To 3	All
3	Turn the ignition off. Disconnect the A/C - Heater Control C1 harness connector. For a door actuator in the front A/C - heater housing assembly, measure the resistance between the Common Door Driver circuit and the applicable door driver circuit. For a door actuator in the rear A/C - heater housing assembly, measure the resistance between the Rear Common Door Driver circuit and the applicable door driver circuit. Is the resistance below 30.0 ohms? Yes → Replace the door actuator in accordance with the Service Information. Perform BODY VERIFICATION TEST - VER 1. No → Go To 5	All

ACT CKT TEST PASSED, OVERCURRENT DTCS ACTIVE - MTC — Continued

TEST	ACTION	APPLICABILITY
4	Turn the ignition off. Disconnect the A/C - Heater Control C1 harness connector. Turn the ignition on. Measure the voltage between the applicable door driver circuit and ground. Is there any voltage present? Yes → Repair the door driver circuit for a short to voltage. Perform BODY VERIFICATION TEST - VER 1. No → Go To 5	All
5	Turn the ignition off. Ensure that the A/C - Heater Control C1 harness connector is connected to the A/C - Heater Control Module. Turn the ignition on. With the DRBIII® in HVAC, System Tests, actuate the Actuator Circuit Test. What message does the DRBIII® display? Same msg as from start of test Replace the A/C - Heater Control Module in accordance with the Service Information. Perform BODY VERIFICATION TEST - VER 1. Different msg than from start of test Using the wiring diagram as a guide, inspect the wiring & connectors for conditions causing an intermittent short that set the original test msg. Repair as necessary. If DRB displays a msg for a different door driver ckt, return to Test 1 of this Symptom. Perform BODY VERIFICATION TEST - VER 1.	All
6	Turn the ignition off. Disconnect the A/C - Heater Control C1 harness connector. Turn the ignition on. Measure the voltage between each of the door driver circuits and ground. Is there any voltage present on any of the circuits? Yes → Repair all door driver circuits with voltage present for a short to voltage. Perform BODY VERIFICATION TEST - VER 1. No → Go To 7	All
7	Turn the ignition off. Disconnect the A/C - Heater Control C1 harness connector. Measure the resistance between ground and each of the door driver circuits. Is the resistance below 10K ohms on any of the circuits? Yes → Repair all door driver circuits with a resistance below 10K ohms for a short to ground. Perform BODY VERIFICATION TEST - VER 1. No → Go To 8	All

ACT CKT TEST PASSED, OVERCURRENT DTCS ACTIVE - MTC — Continued

TEST	ACTION	APPLICABILITY
8	Turn the ignition off. Disconnect the A/C - Heater Control C1 harness connector. **NOTE: If the Actuator Circuit Test messages, displayed on the DRBIII®, identified which circuits are shorted together, then only measure the resistance between those circuits. Otherwise, proceed as follows:** Measure the resistance between the Recirculation Door Driver ckt and, if applicable, the Driver Blend Door Driver ckt, Passenger Blend Door Driver ckt, Rear Blend Door Driver ckt, Mode Door Driver ckt, and the Rear Mode Door Driver ckt. Measure the resistance between the Driver Blend Door Driver ckt and, if applicable, the Passenger Blend Door Driver ckt, Rear Blend Door Driver ckt, Mode Door Driver ckt, and the Rear Mode Door Driver ckt. Measure the resistance between the Mode Door Driver ckt and, if applicable, the Passenger Blend Door Driver ckt, Rear Blend Door Driver ckt, and the Rear Mode Door Driver ckt. If applicable, measure the resistance between the Passenger Blend Door Driver ckt and the Rear Blend Door Driver ckt and the Rear Mode Door Driver ckt. If applicable, measure the resistance between the Rear Blend Door Driver circuit and the Rear Mode Door Driver circuit. If applicable, measure the resistance between the Common Door Driver ckt and the Rear Blend Door Driver ckt and the Rear Mode Door Driver ckt. If applicable, measure the resistance between the Rear Common Door Driver ckt and the Recirculation Door Driver ckt, Driver Blend Door Driver ckt, Passenger Blend Door Driver ckt, and the Mode Door Driver ckt. Is the resistance below 10K ohms on any of the circuits? Yes → Repair the door driver circuits with a resistance below 10K ohms for a short together. Perform BODY VERIFICATION TEST - VER 1. No → Go To 9	All
9	Turn the ignition off. Disconnect the A/C - Heater Control C1 harness connector. Measure the resistance between the Common Door Driver ckt and, if applicable, the Recirculation Door Driver ckt, Driver Blend Door Driver ckt, Passenger Blend Door Driver ckt, and the Mode Door Driver ckt. If applicable, measure the resistance between the Rear Common Door Driver ckt and the Rear Mode Door Driver ckt and the Rear Blend Door Driver ckt. Is the resistance below 30.0 ohms on any of the circuits? Yes → Go To 10 No → Go To 11	All

ACT CKT TEST PASSED, OVERCURRENT DTCS ACTIVE - MTC — Continued

TEST	ACTION	APPLICABILITY
10	Turn the ignition off. Disconnect the A/C - Heater Control C1 harness connector. Disconnect all door actuator harness connectors whose circuit resistance was below 30.0 ohms. For a door actuator in the front A/C - heater housing assembly, measure the resistance between the Common Door Driver circuit and each applicable door driver circuit. For a door actuator in the rear A/C - heater housing assembly, measure the resistance between the Rear Common Door Driver circuit and each applicable door driver circuit. Is the resistance below 10K ohms on any of the circuits? Yes → Repair the door driver circuits with a resistance below 10K ohms for a short to the Common Door Driver circuit or Rear Common Door Driver circuit. Perform BODY VERIFICATION TEST - VER 1. No → Replace all door actuators with a resistance below 30.0 ohms in accordance with the Service Information. Perform BODY VERIFICATION TEST - VER 1.	All
11	Turn the ignition off. Ensure that the A/C - Heater Control C1 harness connector is connected to the A/C - Heater Control Module. Turn the ignition on. With the DRBIII® in HVAC, System Tests, actuate the Actuator Circuit Test. What message does the DRBIII® display? Same msg as from start of test Replace the A/C - Heater Control Module in accordance with the Service Information. Perform BODY VERIFICATION TEST - VER 1. Different msg than from start of test Using the wiring diagram as a guide, inspect the wiring & connectors for conditions causing an intermittent short that set the original test msg. Repair as necessary. If DRB displays a msg for a different door driver ckt, return to Test 1 of this Symptom. Perform BODY VERIFICATION TEST - VER 1.	All

Symptom:
BACKLIGHT DIMMING RX FAILURE (ACTIVE) - MTC

When Monitored and Set Condition:

BACKLIGHT DIMMING RX FAILURE (ACTIVE) - MTC

When Monitored: With the ignition on.

Set Condition: If the A/C - Heater Control Module does not receive the dimming function message from the BCM for more than 5 seconds, then the A/C - Heater Control Module LEDs will default to full brightness and the DTC will set.

POSSIBLE CAUSES
ADDITIONAL CODE(S) PRESENT
A/C - HEATER CONTROL MODULE
BODY CONTROL MODULE - NO DIM MESSAGE TO A/C - HEATER CONTROL MODULE

TEST	ACTION	APPLICABILITY
1	Turn the ignition on. With the DRBIII®, read the BCM codes. Does DRBIII® display Headlamp Switch: Mismatch; STG; Open; or Panel Dim Output Short? Yes → Refer to symptoms Headlamp Switch Mismatch, Headlamp Switch Shorted To Ground, and Headlamp Switch Open in the Exterior Lighting category. Refer to symptom Panel Dimming Output Short in the Instrument Cluster category. Perform BODY VERIFICATION TEST - VER 1. No → Go To 2	All
2	Turn the ignition on. With the DRBIII® in Monitor Display, PCI Bus Messages, look for the VF DIM Msg Present. Does the DRB display: VF DIM Msg present: Yes? Yes → Replace the A/C - Heater Control Module in accordance with the Service Information. Perform BODY VERIFICATION TEST - VER 1. No → Replace the Body Control Module in accordance with the Service Information. Perform BODY VERIFICATION TEST - VER 1.	All

Symptom List:

BLEND CALIBRATION FAULT - MTC
MODE CALIBRATION FAULT - MTC
REAR BLEND CALIBRATION FAULT - MTC
REAR MODE CALIBRATION FAULT - MTC
RECIRCULATION CALIBRATION FAULT - MTC
ZONE CALIBRATION FAULT - MTC

Test Note: All symptoms listed above are diagnosed using the same tests. The title for the tests will be BLEND CALIBRATION FAULT - MTC.

When Monitored and Set Condition:

BLEND CALIBRATION FAULT - MTC

When Monitored: When the HVAC Door Recalibration is executed.

Set Condition: If the passenger blend door's span is found outside the tolerance due to: open door actuator electrical circuits; a bad door actuator; broken door linkage; a bound up door; door actuator electrical circuits shorted to voltage; door actuator electrical circuits shorted to ground. A short to voltage or ground on the door actuator electrical circuits will also set door actuator overcurrent faults.

MODE CALIBRATION FAULT - MTC

When Monitored: When the HVAC Door Recalibration is executed.

Set Condition: If the mode door's span is found outside the tolerance due to: open door actuator electrical circuits; a bad door actuator; broken door linkage; a bound up door; door actuator electrical circuits shorted to voltage; door actuator electrical circuits shorted to ground. A short to voltage or ground on the door actuator electrical circuits will also set door actuator overcurrent faults.

REAR BLEND CALIBRATION FAULT - MTC

When Monitored: When the HVAC Door Recalibration is executed.

Set Condition: If the rear blend door's span is found outside the tolerance due to: open door actuator electrical circuits; a bad door actuator; broken door linkage; a bound up door; door actuator electrical circuits shorted to voltage; door actuator electrical circuits shorted to ground. A short to voltage or ground on the door actuator electrical circuits will also set door actuator overcurrent faults.

REAR MODE CALIBRATION FAULT - MTC

When Monitored: When the HVAC Door Recalibration is executed.

Set Condition: If the rear mode door's span is found outside the tolerance due to: open door actuator electrical circuits; a bad door actuator; broken door linkage; a bound up door; door actuator electrical circuits shorted to voltage; door actuator electrical circuits shorted to ground. A short to voltage or ground on the door actuator electrical circuits will also set door actuator overcurrent faults.

BLEND CALIBRATION FAULT - MTC — Continued

RECIRCULATION CALIBRATION FAULT - MTC

When Monitored: When the HVAC Door Recalibration is executed.

Set Condition: If the recirculation door's span is found outside the tolerance due to: open door actuator electrical circuits; a bad door actuator; broken door linkage; a bound up door; door actuator electrical circuits shorted to voltage; door actuator electrical circuits shorted to ground. A short to voltage or ground on the door actuator electrical circuits will also set door actuator overcurrent faults.

ZONE CALIBRATION FAULT - MTC

When Monitored: When the HVAC Door Recalibration is executed.

Set Condition: If the driver (zone) blend door's span is found outside the tolerance due to: open door actuator electrical circuits; a bad door actuator; broken door linkage; a bound up door; door actuator electrical circuits shorted to voltage; door actuator electrical circuits shorted to ground. A short to voltage or ground on the door actuator electrical circuits will also set door actuator overcurrent faults.

POSSIBLE CAUSES
CHECK FOR ACTUATOR CIRCUIT TEST FAULT MESSAGES
CHECK FOR ACTIVE HVAC DTCS
MODE LINKAGE/DOOR BINDING
PASSENGER BLEND LINKAGE/DOOR BINDING
DRIVER BLEND LINKAGE/DOOR BINDING
RECIRCULATION LINKAGE/DOOR BINDING
REAR MODE LINKAGE/DOOR BINDING
REAR BLEND LINKAGE/DOOR BINDING
A/C - HEATER CONTROL MODULE
DOOR ACTUATOR DRIVER CIRCUIT OPEN
COMMON DOOR DRIVER CIRCUIT OPEN
DOOR ACTUATOR
A/C - HEATER CONTROL MODULE
REAR DOOR ACTUATOR DRIVER CIRCUIT OPEN
REAR COMMON DOOR DRIVER CIRCUIT OPEN
DOOR ACTUATOR
BROKEN ACTUATOR/LINKAGE/DOOR

BLEND CALIBRATION FAULT - MTC — Continued

TEST	ACTION	APPLICABILITY
1	**NOTE: All Actuator Circuit Test fault messages and Overcurrent DTCs must be repaired before diagnosing Calibration fault messages.** Turn the ignition on. With the DRBIII® in HVAC, System Tests, actuate the Actuator Circuit Test. Does the DRBIII® display any Actuator Circuit Test fault messages? Yes → Return to the symptom list and choose the symptom(s). Perform BODY VERIFICATION TEST - VER 1. No → Go To 2	All
2	**NOTE: All Actuator Circuit Test fault messages and Overcurrent DTCs must be repaired before diagnosing Calibration fault messages.** Turn the ignition on. With the DRBIII®, read active HVAC DTCs. Does the DRBIII® display any active HVAC DTCs? Yes → Return to the symptom list and choose the symptom(s). Perform BODY VERIFICATION TEST - VER 1. No → Go To 3	All
3	Which HVAC Door Recalibration fault message is present? Mode Calibration Fault Go To 4 Blend Calibration Fault Go To 5 Zone Calibration Fault Go To 6 Recirculation Calibration Fault Go To 7 Rear Mode Door Calibration Fault Go To 11 Rear Blend Door Calibration Fault Go To 12	All

BLEND CALIBRATION FAULT - MTC — Continued

TEST	ACTION	APPLICABILITY
4	**NOTE: After completing HVAC Door Recalibration, the DRBIII® will store the total span and the status of each door actuator. Selecting HVAC Door Cal Monitor in System Tests will display this information.** With the DRBIII® in HVAC, select System Tests, and then select HVAC Door Cal Monitor. Which message does the DRBIII® display for Mode Status? No Pulses Go To 8 Too Few Pulses Inspect the A/C - Heater Housing Assembly for a condition causing the mode linkage/door to bind. Repair as necessary in accordance with the Service Information. Perform BODY VERIFICATION TEST - VER 1. Too Many Pulses Remove door actuator from housing. By hand, attempt to rotate actuator in both directions. Also, inspect for disconnected, missing, or broken door linkage, and a warped or broken door. Repair as necessary in accordance with the Service Information. Perform BODY VERIFICATION TEST - VER 1. Broken Linkage Remove door actuator from housing. By hand, attempt to rotate actuator in both directions. Also, inspect for disconnected, missing, or broken door linkage, and a warped or broken door. Repair as necessary in accordance with the Service Information. Perform BODY VERIFICATION TEST - VER 1.	All
5	**NOTE: After completing HVAC Door Recalibration, the DRBIII® will store the total span and the status of each door actuator. Selecting HVAC Door Cal Monitor in System Tests will display this information.** With the DRBIII® in HVAC, select System Tests, and then select HVAC Door Cal Monitor. Which message does the DRBIII® display for Blend Status? No Pulses Go To 8 Too Few Pulses Inspect the A/C - Heater Housing Assembly for a condition causing the passenger blend linkage/door to bind. Repair as necessary in accordance with the Service Information. Perform BODY VERIFICATION TEST - VER 1. Too Many Pulses Remove door actuator from housing. By hand, attempt to rotate actuator in both directions. Also, inspect for disconnected, missing, or broken door linkage, and a warped or broken door. Repair as necessary in accordance with the Service Information. Perform BODY VERIFICATION TEST - VER 1. Broken Linkage Remove door actuator from housing. By hand, attempt to rotate actuator in both directions. Also, inspect for disconnected, missing, or broken door linkage, and a warped or broken door. Repair as necessary in accordance with the Service Information. Perform BODY VERIFICATION TEST - VER 1.	All

BLEND CALIBRATION FAULT - MTC — Continued

TEST	ACTION	APPLICABILITY
6	**NOTE: After completing HVAC Door Recalibration, the DRBIII® will store the total span and the status of each door actuator. Selecting HVAC Door Cal Monitor in System Tests will display this information.** With the DRBIII® in HVAC, select System Tests, and then select HVAC Door Cal Monitor. Which message does the DRBIII® display for Zone Status? No Pulses Go To 8 Too Few Pulses Inspect the A/C - Heater Housing Assembly for a condition causing the driver blend linkage/door to bind. Repair as necessary in accordance with the Service Information. Perform BODY VERIFICATION TEST - VER 1. Too Many Pulses Remove door actuator from housing. By hand, attempt to rotate actuator in both directions. Also, inspect for disconnected, missing, or broken door linkage, and a warped or broken door. Repair as necessary in accordance with the Service Information. Perform BODY VERIFICATION TEST - VER 1. Broken Linkage Remove door actuator from housing. By hand, attempt to rotate actuator in both directions. Also, inspect for disconnected, missing, or broken door linkage, and a warped or broken door. Repair as necessary in accordance with the Service Information. Perform BODY VERIFICATION TEST - VER 1.	All
7	**NOTE: After completing HVAC Door Recalibration, the DRBIII® will store the total span and the status of each door actuator. Selecting HVAC Door Cal Monitor in System Tests will display this information.** With the DRBIII® in HVAC, select System Tests, and then select HVAC Door Cal Monitor. Which message does the DRBIII® display for Recirc Status? No Pulses Go To 8 Too Few Pulses Inspect the A/C - Heater Housing Assembly for a condition causing the recirculation linkage/door to bind. Repair as necessary in accordance with the Service Information. Perform BODY VERIFICATION TEST - VER 1. Too Many Pulses Remove door actuator from housing. By hand, attempt to rotate actuator in both directions. Also, inspect for disconnected, missing, or broken door linkage, and a warped or broken door. Repair as necessary in accordance with the Service Information. Perform BODY VERIFICATION TEST - VER 1. Broken Linkage Remove door actuator from housing. By hand, attempt to rotate actuator in both directions. Also, inspect for disconnected, missing, or broken door linkage, and a warped or broken door. Repair as necessary in accordance with the Service Information. Perform BODY VERIFICATION TEST - VER 1.	All

BLEND CALIBRATION FAULT - MTC — Continued

TEST	ACTION	APPLICABILITY
8	Turn the ignition off. Disconnect the A/C - Heater Control Module C1 harness connector. Measure the resistance between the Common Door Driver circuit and the applicable door driver circuit. Is the resistance above 70.0 ohms? Yes → Go To 9 No → Reconnect C1. Rerun Recalibration. If DRB displays same fault, replace A/C-Htr Cntrl in accord with Service Info. If DRBIII displays a different fault, ck wiring & connectors for cause of intermittent condition. If no prob found, rerun test from Step 1. Perform BODY VERIFICATION TEST - VER 1.	All
9	Turn the ignition off. Disconnect the A/C - Heater Control Module C1 harness connector. Remove the applicable door actuator from the A/C - Heater Housing Assembly. Disconnect the door actuator harness connector. Measure the resistance of the door driver circuit between the A/C - Heater Control Module C1 harness connector and the door actuator harness connector. Is the resistance below 5.0 ohms? Yes → Go To 10 No → Repair the door driver circuit for an open. Perform BODY VERIFICATION TEST - VER 1.	All
10	Turn the ignition off. Disconnect the A/C - Heater Control Module C1 harness connector. Remove the applicable door actuator from the A/C - Heater Housing Assembly. Disconnect the door actuator harness connector. Measure the resistance of the Common Door Driver circuit between the door actuator harness connector and the A/C - Heater Control Module C1 harness connector. Is the resistance below 5.0 ohms? Yes → Replace the door actuator in accordance with the Service Information. Perform BODY VERIFICATION TEST - VER 1. No → Repair the Common Door Driver circuit for an open. Perform BODY VERIFICATION TEST - VER 1.	All

BLEND CALIBRATION FAULT - MTC — Continued

TEST	ACTION	APPLICABILITY
11	**NOTE: After completing HVAC Door Recalibration, the DRBIII® will store the total span and the status of each door actuator. Selecting HVAC Door Cal Monitor in System Tests will display this information.** With the DRBIII® in HVAC, select System Tests, and then select HVAC Door Cal Monitor. Which message does the DRBIII® display for R Mode Status? No Pulses Go To 13 Too Few Pulses Inspect the Rear A/C - Heater Housing Assembly for a condition causing the rear mode linkage/door to bind. Repair as necessary in accordance with the Service Information. Perform BODY VERIFICATION TEST - VER 1. Too Many Pulses Remove door actuator from housing. By hand, attempt to rotate actuator in both directions. Also, inspect for disconnected, missing, or broken door linkage, and a warped or broken door. Repair as necessary in accordance with the Service Information. Perform BODY VERIFICATION TEST - VER 1. Broken Linage Remove door actuator from housing. By hand, attempt to rotate actuator in both directions. Also, inspect for disconnected, missing, or broken door linkage, and a warped or broken door. Repair as necessary in accordance with the Service Information. Perform BODY VERIFICATION TEST - VER 1.	All
12	**NOTE: After completing HVAC Door Recalibration, the DRBIII® will store the total span and the status of each door actuator. Selecting HVAC Door Cal Monitor in System Tests will display this information.** With the DRBIII® in HVAC, select System Tests, and then select HVAC Door Cal Monitor. Which message does the DRBIII® display for R Blend Status? No Pulses Go To 13 Too Few Pulses Inspect the Rear A/C - Heater Housing Assembly for a condition causing the rear blend linkage/door to bind. Repair as necessary in accordance with the Service Information. Perform BODY VERIFICATION TEST - VER 1. Too Many Pulses Remove door actuator from housing. By hand, attempt to rotate actuator in both directions. Also, inspect for disconnected, missing, or broken door linkage, and a warped or broken door. Repair as necessary in accordance with the Service Information. Perform BODY VERIFICATION TEST - VER 1. Broken Linkage Remove door actuator from housing. By hand, attempt to rotate actuator in both directions. Also, inspect for disconnected, missing, or broken door linkage, and a warped or broken door. Repair as necessary in accordance with the Service Information. Perform BODY VERIFICATION TEST - VER 1.	All

BLEND CALIBRATION FAULT - MTC — Continued

TEST	ACTION	APPLICABILITY
13	Turn the ignition off. Disconnect the A/C - Heater Control Module C1 harness connector. Measure the resistance between the Rear Common Door Driver circuit and the applicable door driver circuit. Is the resistance above 70.0 ohms? Yes → Go To 14 No → Reconnect C1. Rerun Recalibration. If DRB displays same fault, replace A/C-Htr Cntrl in accord with Service Info. If DRBIII displays a different fault, ck wiring & connectors for cause of intermittent condition. If no prob found, rerun test from Step 1. Perform BODY VERIFICATION TEST - VER 1.	All
14	Turn the ignition off. Disconnect the A/C - Heater Control Module C1 harness connector. Remove the applicable door actuator from the Rear A/C - Heater Housing Assembly. Disconnect the door actuator harness connector. Measure the resistance of the door driver circuit between the A/C - Heater Control Module C1 harness connector and the door actuator harness connector. Is the resistance below 5.0 ohms? Yes → Go To 15 No → Repair the Rear Common Door Driver circuit for an open. Perform BODY VERIFICATION TEST - VER 1.	All
15	Turn the ignition off. Disconnect the A/C - Heater Control Module C1 harness connector. Remove the applicable door actuator from the Rear A/C - Heater Housing Assembly. Disconnect the door actuator harness connector. Measure the resistance of the Rear Common Door Driver circuit between the door actuator harness connector and the A/C - Heater Control Module C1 harness connector. Is the resistance below 5.0 ohms? Yes → Replace the door actuator in accordance with the Service Information. Perform BODY VERIFICATION TEST - VER 1. No → Repair the Rear Common Door Driver circuit for an open. Perform BODY VERIFICATION TEST - VER 1.	All

Symptom List:

BLEND OVERCURRENT (ACTIVE) - MTC
MODE OVERCURRENT (ACTIVE) - MTC
REAR BLEND OVERCURRENT (ACTIVE) - MTC
REAR MODE OVERCURRENT (ACTIVE) - MTC
RECIRC OVERCURRENT (ACTIVE) - MTC
ZONE OVERCURRENT (ACTIVE) - MTC

Test Note: All symptoms listed above are diagnosed using the same tests. The title for the tests will be BLEND OVERCURRENT (ACTIVE) - MTC.

When Monitored and Set Condition:

BLEND OVERCURRENT (ACTIVE) - MTC

When Monitored: When actuator movement is requested.

Set Condition: This DTC will set if the A/C - Heater Control Module detects an excessive current draw on any of the door driver circuits while attempting to drive the passenger blend door actuator. Only one overcurrent DTC can set per ignition cycle.

MODE OVERCURRENT (ACTIVE) - MTC

When Monitored: When actuator movement is requested.

Set Condition: This DTC will set if the A/C - Heater Control Module detects an excessive current draw on any of the door driver circuits while attempting to drive this actuator. Only one overcurrent DTC can set per ignition cycle.

REAR BLEND OVERCURRENT (ACTIVE) - MTC

When Monitored: When actuator movement is requested.

Set Condition: This DTC will set if the A/C - Heater Control Module detects an excessive current draw on any of the door driver circuits while attempting to drive this actuator. Only one overcurrent DTC can set per ignition cycle.

REAR MODE OVERCURRENT (ACTIVE) - MTC

When Monitored: When actuator movement is requested.

Set Condition: This DTC will set if the A/C - Heater Control Module detects an excessive current draw on any of the door driver circuits while attempting to drive this actuator. Only one overcurrent DTC can set per ignition cycle.

RECIRC OVERCURRENT (ACTIVE) - MTC

When Monitored: When actuator movement is requested.

Set Condition: This DTC will set if the A/C - Heater Control Module detects an excessive current draw on any of the door driver circuits while attempting to drive this actuator. Only one overcurrent DTC can set per ignition cycle.

BLEND OVERCURRENT (ACTIVE) - MTC — Continued

ZONE OVERCURRENT (ACTIVE) - MTC

When Monitored: When actuator movement is requested.

Set Condition: This DTC will set if the A/C - Heater Control Module detects an excessive current draw on any of the door driver circuits while attempting to drive the driver (zone) blend door actuator. Only one overcurrent DTC can set per ignition cycle.

POSSIBLE CAUSES
RUN THE ACTUATOR CIRCUIT TEST

TEST	ACTION	APPLICABILITY
1	View repair Repair With the DRBIII® in HVAC, System Tests, actuate the Actuator Circuit Test. Read the Actuator Circuit Test message(s). Return to the symptom list and choose the symptom(s). If two or more drivelines are shorted together when running the Actuator Ckt Test, the DRBIII® may display Actuator Ckt Test Passed even though Overcurrent DTCs are active. If this occurs, refer to symptom Act Ckt Test Passed, Overcurrent DTCs Active. Perform BODY VERIFICATION TEST - VER 1.	All

Symptom:

BLOWER NOT ON HIGH - MTC

When Monitored and Set Condition:

BLOWER NOT ON HIGH - MTC

When Monitored: When executing the Cooldown Test.

Set Condition: This message will be displayed if the front blower is not operating at high speed when executing the Cooldown Test.

POSSIBLE CAUSES
HVAC DTC(S) PRESENT
TEST SET UP CONDITIONS NOT MET
FRONT BLOWER/RELATED CIRCUITS

TEST	ACTION	APPLICABILITY
1	Turn the ignition on. With the DRBIII®, read HVAC DTCs. Does the DRBIII® display any HVAC DTCs? Yes → Return to the symptom list and choose the symptom(s). After the repair is complete, with the DRBIII®, erase the DTC(s). Cycle the ignition switch. With the DRBIII®, actuate the Cooldown Test. Perform BODY VERIFICATION TEST - VER 1. No → Go To 2	All
2	Was the front blower control set to high speed the entire time the Cooldown Test was actuated? Yes → Check the front blower motor and related circuits for front blower operation problems. Repair as necessary. After repair is complete, with the DRBIII®, actuate the Cooldown Test. Perform BODY VERIFICATION TEST - VER 1. No → Start the engine. Set the Front Blower Front Control switch to high speed. With the DRBIII®, actuate the Cooldown Test. Perform BODY VERIFICATION TEST - VER 1.	All

Symptom List:

COOLDOWN TEST SENSOR FAILURE - MTC
COOLDOWN TIME EXCESSIVE FAULT - MTC

Test Note: All symptoms listed above are diagnosed using the same tests. The title for the tests will be COOLDOWN TEST SENSOR FAILURE - MTC.

When Monitored and Set Condition:

COOLDOWN TEST SENSOR FAILURE - MTC

When Monitored: When executing the Cooldown Test.

Set Condition: This message will be displayed if a fault is detected with the Evaporator Temperature Sensor/circuit when executing the Cooldown Test.

COOLDOWN TIME EXCESSIVE FAULT - MTC

When Monitored: When executing the Cooldown Test.

Set Condition: This message will be displayed if the A/C system is unable to bring the evaporator temperature down 6.7°C (20°F) within two minutes.

POSSIBLE CAUSES
HVAC DTC(S) PRESENT
CHECK THE PCM/ECM FOR DTCS
A/C SYSTEM TESTING

TEST	ACTION	APPLICABILITY
1	**CAUTION: The evaporator temperature must be above 12.7°C (55°F) and the work area ambient temperature must be above 21.1°C (70°F) to test A/C system operation.** Turn the ignition on. With the DRBIII®, read HVAC DTCs. Does the DRBIII® display any HVAC DTCs? Yes → Return to the symptom list and choose the symptom(s). After repair is complete, rerun the Cooldown Test. Perform BODY VERIFICATION TEST - VER 1. No → Go To 2	All

COOLDOWN TEST SENSOR FAILURE - MTC — Continued

TEST	ACTION	APPLICABILITY
2	**CAUTION: The evaporator temperature must be above 12.7°C (55°F) and the work area ambient temperature must be above 21.1°C (70°F) to test A/C system operation.** Turn the ignition on. With the DRBIII®, check the PCM/ECM for DTCs. Are any DTCs present? Yes → Refer to Powertrain Diagnostic information for the related symptom(s). After repair is complete, rerun the Cooldown Test. Perform BODY VERIFICATION TEST - VER 1. No → Refer to the Service Information for additional Cooldown Test related diagnostic information and testing procedures. After repair is complete, rerun the Cooldown Test. Perform BODY VERIFICATION TEST - VER 1.	All

Symptom:
COOLDOWN TEST TOO COLD TO START - MTC

When Monitored and Set Condition:

COOLDOWN TEST TOO COLD TO START - MTC

When Monitored: When executing the Cooldown Test.

Set Condition: This message will be displayed if the A/C - Heater Control Module sees evaporator temperature below 12.7°C (55°F) when executing the Cooldown Test.

POSSIBLE CAUSES
EVAPORATOR TEMPERATURE TOO LOW
HVAC DTC(S) PRESENT
CHECK THE PCM/ECM FOR DTCS
EVAPORATOR TEMPERATURE SENSOR
SENSOR GROUND CIRCUIT HIGH RESISTANCE
EVAPORATOR TEMPERATURE SENSOR SIGNAL CIRCUIT HIGH RESISTANCE
A/C - HEATER CONTROL MODULE

TEST	ACTION	APPLICABILITY
1	**CAUTION: The evaporator temperature must be above 12.7°C (55°F) and the work area ambient temperature must be above 21.1°C (70°F) to test A/C system operation.** Start the engine. Turn the A/C off. Turn the Blower on high. Allow the blower to run for 5 minutes to ensure that the Evaporator Temperature Sensor temperature is above 12.7°C (55°F). With the DRBIII®, actuate the Cooldown Test. Does the DRBIII® display: Cooldown Test Too Cold To Start? Yes → Go To 2 No → Perform additional testing as necessary. Perform BODY VERIFICATION TEST - VER 1.	All
2	**CAUTION: The evaporator temperature must be above 12.7°C (55°F) and the work area ambient temperature must be above 21.1°C (70°F) to test A/C system operation.** Turn the ignition on. With the DRBIII®, read HVAC DTCs. Does the DRBIII® display any HVAC DTCs? Yes → Return to the symptom list and choose the symptom(s). After the repair is complete, with the DRBIII®, erase the DTC(s). Cycle the ignition switch. With the DRBIII®, actuate the Cooldown Test. Perform BODY VERIFICATION TEST - VER 1. No → Go To 3	All

COOLDOWN TEST TOO COLD TO START - MTC — Continued

TEST	ACTION	APPLICABILITY
3	**CAUTION: The evaporator temperature must be above 12.7°C (55°F) and the work area ambient temperature must be above 21.1°C (70°F) to test A/C system operation.** Turn the ignition on. With the DRBIII®, check the PCM/ECM for DTCs. Are any DTCs present? Yes → Refer to Powertrain Diagnostic information for the related symptom(s). After the repair is complete, with the DRBIII®, erase the DTC(s). Cycle the ignition switch. With the DRBIII®, actuate the Cooldown Test. Perform BODY VERIFICATION TEST - VER 1. No → Go To 4	All
4	Turn the ignition off. Disconnect the Evaporator Temperature Sensor harness connector. Turn the ignition on. With the DRBIII® in Sensor Display, read the Evaporator Temperature Sensor voltage. Is the voltage above 4.9 volts? Yes → Go To 5 No → Go To 6	All
5	Turn the ignition off. Disconnect the Evaporator Temperature Sensor harness connector. Connect a jumper wire between the Evaporator Temperature Sensor Signal circuit and the Sensor Ground circuit at the Evaporator Temperature Sensor harness connector. Turn the ignition on. With the DRBIII® in Sensor Display, read the Evaporator Temperature Sensor voltage. Is the voltage 0.0 volts? Yes → Replace the Evaporator Temperature Sensor in accordance with the Service Information. After repair is complete, rerun the Cooldown Test. Perform BODY VERIFICATION TEST - VER 1. No → Go To 6	All
6	**NOTE: Ensure that the Evaporator Temperature Sensor harness connector is connected to the Evaporator Temperature Sensor.** **NOTE: Ensure that the voltmeter leads meet the terminals in the connector and that there is good terminal to wire connection.** **NOTE: Ensure the voltmeter leads are connected for positive polarity.** Back probe the Sensor Ground circuit between the Evaporator Temperature Sensor harness connector and the A/C - Heater Control Module C1 harness connector. Turn the ignition on. Is the voltage below 0.10 volt? Yes → Go To 7 No → Repair the high resistance in the Sensor Ground circuit. After repair is complete, rerun the Cooldown Test. Perform BODY VERIFICATION TEST - VER 1.	All

COOLDOWN TEST TOO COLD TO START - MTC — Continued

TEST	ACTION	APPLICABILITY
7	**NOTE: Ensure that the Evaporator Temperature Sensor harness connector is connected to the Evaporator Temperature Sensor.** **NOTE: Ensure the voltmeter leads meet the terminals in the connector and that there is good terminal to wire connection.** **NOTE: Ensure the voltmeter leads are connected for positive polarity** Back probe the Evaporator Temperature Sensor Signal circuit between the Evaporator Temperature Sensor harness connector and the A/C - Heater Control Module C1 harness connector. Turn the ignition on. Is the voltage below 0.10 volt? Yes → Replace the A/C - Heater Control Module in accordance with the Service Information. After repair is complete, rerun the Cooldown Test. Perform BODY VERIFICATION TEST - VER 1. No → Repair the high resistance in the Evaporator Temperature Sensor Signal circuit. After repair is complete, rerun the Cooldown Test. Perform BODY VERIFICATION TEST - VER 1.	All

Symptom:

EVAPORATOR TEMPERATURE SENSOR CIRCUIT OPEN (ACTIVE) - MTC

When Monitored and Set Condition:

EVAPORATOR TEMPERATURE SENSOR CIRCUIT OPEN (ACTIVE) - MTC

When Monitored: With the ignition on.

Set Condition: This DTC will set if the A/C - Heater Control Module sees abnormally high voltage on the Evaporator Temperature Sensor Signal circuit.

POSSIBLE CAUSES
EVAPORATOR TEMPERATURE SENSOR SIGNAL CIRCUIT SHORTED HIGH
A/C - HEATER CONTROL MODULE
A/C-HEATER CONTROL MODULE
EVAPORATOR TEMPERATURE SENSOR SIGNAL CIRCUIT OPEN
SENSOR GROUND CIRCUIT OPEN
EVAPORATOR TEMPERATURE SENSOR

TEST	ACTION	APPLICABILITY
1	Turn the ignition off. Disconnect the A/C - Heater Control Module C1 harness connector. Turn the ignition on. Measure the voltage between the Evaporator Temperature Sensor Signal circuit and ground. Is there any voltage present? Yes → Repair the Evaporator Temperature Sensor Signal circuit for a short to voltage. Perform BODY VERIFICATION TEST - VER 1. No - For RS Vehicles Go To 2 No - For RG Vehicles Go To 3	All

EVAPORATOR TEMPERATURE SENSOR CIRCUIT OPEN (ACTIVE) - MTC — Continued

TEST	ACTION	APPLICABILITY
2	Turn the ignition off. Disconnect the A/C - Heater Control Module C1 harness connector. Measure the resistance between the Evaporator Temperature Sensor Signal circuit and the Sensor Ground circuit. The approximate circuit resistance should be: **NOTE: The following specifications are for RS vehicles only.** 1,468 ohms @ 40°C (104°F). 1,800 ohms @ 35°C (95°F). 2,221 ohms @ 30°C (86°F). 2,757 ohms @ 25°C (77°F). 3,443 ohms @ 20°C (68°F). 4,330 ohms @ 15°C (59°F). 5,485 ohms @ 10°C (50°F). 7,354 ohms @ 4°C (39°F). 8,130 ohms @ 2°C (36°F). Is the resistance within the specifications? Yes → Replace the A/C - Heater Control Module in accordance with the Service Information. Perform BODY VERIFICATION TEST - VER 1. No → Go To 4	All
3	Turn the ignition off. Disconnect the A/C-Heater Control C2 harness connector. Measure the resistance between the Evaporator Temperature Sensor Signal circuit and the Sensor Ground circuit. The approximate circuit resistance should be: **NOTE: The following specifications are for RG vehicles only.** 5,900 ohms @ 38°C (100°F). 6,600 ohms @ 35°C (95°F). 7,400 ohms @ 32°C (90°F). 8,300 ohms @ 29°C (85°F). 9,400 ohms @ 27°C (80°F). 10,600 ohms @ 24°C (75°F). 11,900 ohms @ 21°C (70°F). 13,500 ohms @ 18°C (65°F). 15,300 ohms @ 16°C (60°F). 17,500 ohms @ 13°C (55°F). 19,900 ohms @ 10°C (50°F). 22,800 ohms @ 7°C (45°F). 26,100 ohms @ 4°C (40°F). 30,000 ohms @ 2°C (35°F). 34,600 ohms @ -1°C (30°F). Is the resistance within the specifications? Yes → Replace the A/C-Heater Control Module in accordance with the Service Information. Perform BODY VERIFICATION TEST - VER 1. No → Go To 4	All

EVAPORATOR TEMPERATURE SENSOR CIRCUIT OPEN (ACTIVE) - MTC — Continued

TEST	ACTION	APPLICABILITY
4	Turn the ignition off. Disconnect the A/C - Heater Control Module C1 harness connector. Open the glove box door. Disconnect the glove box door roller latch from each side of the glove box. Roll the glove box downward toward the floor. Disconnect the in-line C202 harness connector. Measure the resistance of the Evaporator Temperature Sensor Signal circuit between the A/C - Heater Control Module C1 harness connector and the in-line C202 harness connector. Is the resistance below 5.0 ohms? Yes → Go To 5 No → Repair the Evaporator Temperature Sensor Signal circuit between the A/C - Heater Control Module C1 harness connector and the in-line C202 harness connector (HVAC side) for an open. Perform BODY VERIFICATION TEST - VER 1.	All
5	Turn the ignition off. Disconnect the A/C - Heater Control Module C1 harness connector. Open the glove box door. Disconnect the glove box door roller latch from each side of the glove box. Roll the glove box downward toward the floor. Disconnect the in-line C202 harness connector. Measure the resistance of the Sensor Ground circuit between the A/C - Heater Control Module C1 harness connector and the in-line C202 harness connector. Is the resistance below 5.0 ohms? Yes → Check the wiring harness between the in-line C202 harness connector (plenum side) and the Evaporator Temperature Sensor for an open. Repair as necessary. If Ok, replace the Evaporator Temperature Sensor in accordance with the Service Information. Perform BODY VERIFICATION TEST - VER 1. No → Repair the Sensor Ground circuit between the A/C - Heater Control Module C1 harness connector and the in-line C202 harness connector (HVAC side) for an open. Perform BODY VERIFICATION TEST - VER 1.	All

Symptom:

EVAPORATOR TEMPERATURE SENSOR CIRCUIT SHORT (ACTIVE) - MTC

When Monitored and Set Condition:

EVAPORATOR TEMPERATURE SENSOR CIRCUIT SHORT (ACTIVE) - MTC

When Monitored: With the ignition on.

Set Condition: This DTC will set if the A/C - Heater Control Module sees abnormally low voltage on the Evaporator Temperature Sensor Signal circuit.

POSSIBLE CAUSES
EVAPORATOR TEMPERATURE SENSOR
EVAPORATOR TEMPERATURE SENSOR SIGNAL CIRCUIT SHORT TO GROUND
EVAPORATOR TEMPERATURE SENSOR SIGNAL CIRCUIT SHORT TO SENSOR GROUND CIRCUIT
A/C - HEATER CONTROL MODULE

TEST	ACTION	APPLICABILITY
1	Turn the ignition off. Open the glove box door. Disconnect the glove box door roller latch from each side of the glove box. Roll the glove box downward toward the floor. Disconnect the in-line C202 harness connector. Turn the ignition on. With the DRBIII® in Sensor Display, read the Evaporator Temperature Sensor voltage. Does the DRBIII® display: 5.0 volts or greater? Yes → Check the Evap Temp Sensor Signal circuit between the in-line C202 harness connector (plenum side) and the Evap Temp Sensor for a short to ground. Repair as necessary. If Ok, replace the Evaporator Temperature Sensor in accordance with the Service Info. Perform BODY VERIFICATION TEST - VER 1. No → Go To 2	All

EVAPORATOR TEMPERATURE SENSOR CIRCUIT SHORT (ACTIVE) - MTC — Continued

TEST	ACTION	APPLICABILITY
2	Turn the ignition off. Disconnect the A/C - Heater Control Module C1 harness connector. Open the glove box door. Disconnect the glove box door roller latch from each side of the glove box. Roll the glove box downward toward the floor. Disconnect the in-line C202 harness connector. Measure the resistance between ground and the Evaporator Temperature Sensor Signal circuit (HVAC side). Is the resistance above 10K ohms? Yes → Go To 3 No → Repair the Evaporator Temperature Sensor Signal circuit between the A/C - Heater Control Module C1 harness connector and the in-line C202 harness connector (HVAC side) for a short to ground. Perform BODY VERIFICATION TEST - VER 1.	All
3	Turn the ignition off. Disconnect the A/C - Heater Control Module C1 harness connector. Open the glove box door. Disconnect the glove box door roller latch from each side of the glove box. Roll the glove box downward toward the floor. Disconnect the in-line C202 harness connector. Measure the resistance between the Evaporator Temperature Sensor Signal circuit and the Sensor Ground circuit (HVAC side). Is the resistance above 10K ohms? Yes → Replace the A/C - Heater Control Module in accordance with the Service Information. Perform BODY VERIFICATION TEST - VER 1. No → Repair the Evaporator Temperature Sensor Signal circuit between the A/C - Heater Control Module C1 harness connector and the in-line C202 harness connector (HVAC side) for a short to Sensor Ground. Perform BODY VERIFICATION TEST - VER 1.	All

Symptom List:

FRONT AND REAR BLOWER OUTPUT 1 OPEN
FRONT AND REAR BLOWER OUTPUT 2 OPEN

Test Note: All symptoms listed above are diagnosed using the same tests. The title for the tests will be FRONT AND REAR BLOWER OUTPUT 1 OPEN.

When Monitored and Set Condition:

FRONT AND REAR BLOWER OUTPUT 1 OPEN

When Monitored: Continuously.

Set Condition: If the FCM detects no voltage present on the Front/Rear Blower Motor Relay Control circuit.

FRONT AND REAR BLOWER OUTPUT 2 OPEN

When Monitored: Continuously.

Set Condition: If the FCM detects no voltage present on the Front/Rear Blower Motor Relay Control circuit.

POSSIBLE CAUSES
CHECK DTCS
B+ CIRCUIT OPEN
FRONT AND REAR BLOWER RELAYS OPEN
FRONT/REAR BLOWER MOTOR RELAY CONTROL CIRCUIT SHORTED TO GROUND
FRONT/REAR BLOWER MOTOR RELAY CONTROL CIRCUIT OPEN
FRONT CONTROL MODULE

TEST	ACTION	APPLICABILITY
1	Turn the ignition on. **NOTE: If neither DTC will reset or is active, refer to the wiring diagrams located in the service information to help isolate a possible intermittent condition.** With the DRB, read the FCM DTCs. Are both the Front/Rear Blower Output 1 Open and the Front/Rear Blower Output 2 Open DTCs set? Yes → Go To 2 No → Replace the Front Control Module (FCM) in accordance with the Service Information. Perform BODY VERIFICATION TEST - VER 1.	All

FRONT AND REAR BLOWER OUTPUT 1 OPEN — Continued

TEST	ACTION	APPLICABILITY
2	Remove either the Front Blower Motor Relay or the Rear Blower Motor Relay, if equipped, from the IPM. Using a 12-volt test light connected to ground, probe cavity 86 of the blower relay connector. Is the test light illuminated? Yes → Go To 3 No → Check the B+ feed to the Intelligent Power Module (IPM) for an open. If OK, replace the IPM in accordance with the Service Information. Perform BODY VERIFICATION TEST - VER 1.	All
3	Turn the ignition off. Install a substitute relay in place of the existing Front Blower Motor Relay and the existing Rear Blower Motor Relay, if equipped. With the DRB, erase DTCs. Turn the ignition off, wait 30 seconds, then turn the ignition on. With the DRB, read DTCs. Did these DTCs reset? Yes → Go To 4 No → Replace the Front Blower Motor Relay and the Rear Blower Motor Relay, if equipped. Perform BODY VERIFICATION TEST - VER 1.	All
4	Turn the ignition off. Remove the Front Control Module from the IPM. Remove the Front Blower Motor Relay and the Rear Blower Motor Relay, if equipped, from the IPM. Measure the resistance between ground and the Front/Rear Blower Motor Relay Control circuit (FCM connector cavity 30). Is the resistance below 5.0 ohms? Yes → Replace the Intelligent Power Module (IPM) in accordance with the Service Information. Perform BODY VERIFICATION TEST - VER 1. No → Go To 5	All
5	Turn the ignition off. Remove the Front Control Module from the IPM. Remove the Front Blower Motor Relay from the IPM. Measure the resistance of the Front/Rear Blower Motor Relay Control circuit between the FCM connector cavity 30 and the Front Blower Motor Relay connector cavity 85. Is the resistance below 5.0 ohms? Yes → Replace the Front Control Module (FCM) in accordance with the Service Information. Perform BODY VERIFICATION TEST - VER 1. No → Replace the Intelligent Power Module (IPM) in accordance with the Service Information. Perform BODY VERIFICATION TEST - VER 1.	All

Symptom List:

FRONT AND REAR BLOWER OUTPUT 1 SHORT TO BATT
FRONT AND REAR BLOWER OUTPUT 2 SHORT TO BATT

Test Note: All symptoms listed above are diagnosed using the same tests. The title for the tests will be FRONT AND REAR BLOWER OUTPUT 1 SHORT TO BATT.

When Monitored and Set Condition:

FRONT AND REAR BLOWER OUTPUT 1 SHORT TO BATT

When Monitored: With the ignition on.

Set Condition: The FCM detects excessive current when attempting to close the Front/ Rear Blower Motor Relays.

FRONT AND REAR BLOWER OUTPUT 2 SHORT TO BATT

When Monitored: With the ignition on.

Set Condition: The FCM detects excessive current when attempting to close the Front/ Rear Blower Motor Relays.

POSSIBLE CAUSES
CHECK DTCS
FRONT BLOWER MOTOR RELAY SHORTED
REAR BLOWER MOTOR RELAY SHORTED
FRONT/REAR BLOWER MOTOR RELAY CONTROL CIRCUIT SHORTED TO BATTERY
FRONT CONTROL MODULE

TEST	ACTION	APPLICABILITY
1	Turn the ignition on. **NOTE: If neither DTC will reset or is active, refer to the wiring diagrams located in the service information to help isolate a possible intermittent condition.** With the DRB, read the FCM DTCs. Are both of these DTCs set? Yes → Go To 2 No → Replace the Front Control Module (FCM) in accordance with the Service Information. Perform BODY VERIFICATION TEST - VER 1.	All

FRONT AND REAR BLOWER OUTPUT 1 SHORT TO BATT — Continued

TEST	ACTION	APPLICABILITY
2	Turn the ignition off. Install a substitute relay in place of the existing Front Blower Motor Relay. With the DRB, erase DTCs. Turn the ignition on. With the DRB, read DTCs. Did these DTCs reset? Yes, equipped with rear blower motor Go To 3 Yes, not equipped with rear blower motor Go To 4 No → Replace the original Front Blower Motor Relay. Perform BODY VERIFICATION TEST - VER 1.	All
3	Turn the ignition off. Install a substitute relay in place of the existing Rear Blower Motor Relay. With the DRB, erase DTCs. Turn the ignition on. With the DRB, read DTCs. Did these DTCs reset? Yes → Go To 4 No → Replace the original Rear Blower Motor Relay. Perform BODY VERIFICATION TEST - VER 1.	All
4	Turn the ignition off. Remove the Front Control Module from the IPM. Remove the Front Blower Motor Relay and the Rear Blower Motor Relay, if equipped, from the IPM. Turn the ignition on. Using a 12-volt test light connected to ground, probe the Front Blower Motor Relay connector cavity 85. Is the test light illuminated? Yes → Replace the Intelligent Power Module (IPM) in accordance with the Service Information. Perform BODY VERIFICATION TEST - VER 1. No → Replace the Front Control Module (FCM) in accordance with the Service Information. Perform BODY VERIFICATION TEST - VER 1.	All

Symptom:
LOOPBACK TEST FAILURE (ACTIVE) - MTC

When Monitored and Set Condition:

LOOPBACK TEST FAILURE (ACTIVE) - MTC

When Monitored: When the A/C - Heater Control Module executes an internal loopback test.

Set Condition: If the A/C - Heater Control Module fails to send a message, or none of the expected messages arrive for 5 seconds, an internal loopback test is executed. If the internal loopback test fails, the DTC will set.

POSSIBLE CAUSES
ADDITIONAL CODE(S) PRESENT
A/C - HEATER CONTROL MODULE

TEST	ACTION	APPLICABILITY
1	Turn the ignition on. With the DRBIII®, read HVAC DTCs. Does the DRBIII® display any additional HVAC DTCs? Yes → Return to the symptom list and choose the symptom(s). Perform BODY VERIFICATION TEST - VER 1. No → Replace the A/C - Heater Control Module in accordance with the Service Information. Perform BODY VERIFICATION TEST - VER 1.	All

Symptom List:

NO FUEL LEVEL MESSAGE RECEIVED (ACTIVE) - MTC
PCM COMMUNICATION FAILURE (ACTIVE) - MTC
VEHICLE ODOMETER FAILURE (ACTIVE) - MTC

Test Note: All symptoms listed above are diagnosed using the same tests. The title for the tests will be NO FUEL LEVEL MESSAGE RECEIVED (ACTIVE) - MTC.

When Monitored and Set Condition:

NO FUEL LEVEL MESSAGE RECEIVED (ACTIVE) - MTC

When Monitored: With the ignition on.

Set Condition: This DTC will set if the A/C - Heater Control Module does not receive the Fuel Level message from the PCM for more than 5 seconds.

PCM COMMUNICATION FAILURE (ACTIVE) - MTC

When Monitored: With the ignition on.

Set Condition: This DTC will set if the A/C - Heater Control Module does not receive the Fuel message from the PCM for more than 5 seconds.

VEHICLE ODOMETER FAILURE (ACTIVE) - MTC

When Monitored: With the ignition on.

Set Condition: This DTC will set if the A/C - Heater Control Module does not receive the Vehicle Odometer message from the PCM for more than 5 seconds.

POSSIBLE CAUSES
MESSAGE NOT RECEIVED
ATTEMPT TO COMMUNICATE WITH THE PCM/ECM
PCI BUS CIRCUIT OPEN
POWERTRAIN/ENGINE CONTROL MODULE

TEST	ACTION	APPLICABILITY
1	Turn the ignition on. With the DRBIII®, enter HVAC, System Tests then PCM Monitor. Does the DRBIII® display: PCM is active on BUS? Yes → Replace the A/C - Heater Control Module in accordance with the Service Information. Perform BODY VERIFICATION TEST - VER 1. No → Go To 2	All

NO FUEL LEVEL MESSAGE RECEIVED (ACTIVE) - MTC — Continued

TEST	ACTION	APPLICABILITY
2	Turn the ignition on. With the DRBIII®, attempt to communicate with the PCM/ECM. Was the DRBIII® able to communicate with the PCM/ECM? Yes → Go To 3 No → Refer to Communication for the related symptom(s) Perform BODY VERIFICATION TEST - VER 1.	All
3	Turn the ignition off. Disconnect the PCM C2/ECM C1 harness connector. Read the following caution if vehicle is equipped with NGC. **CAUTION: DO NOT PROBE THE PCM HARNESS CONNECTORS. PROBING THE PCM HARNESS CONNECTORS WILL DAMAGE THE PCM TERMINALS RESULTING IN POOR TERMINAL TO PIN CONNECTION. INSTALL MILLER SPECIAL TOOL #8815 TO PERFORM DIAGNOSIS.** Disconnect the DRBIII® from the Data Link Connector (DLC). Disconnect the negative battery cable. Measure the resistance of the PCI Bus circuit between the Data Link Connector (DLC) and the PCM C2/ECM C1 connector. Is the resistance below 5.0 ohms? Yes → Replace and program the Powertrain/Engine Control Module in accordance with the Service Information. Perform BODY VERIFICATION TEST - VER 1. No → Repair the PCI Bus circuit for an open. Perform BODY VERIFICATION TEST - VER 1.	All

Symptom:
REAR BLEND POT CIRCUIT OPEN (ACTIVE) - MTC

When Monitored and Set Condition:

REAR BLEND POT CIRCUIT OPEN (ACTIVE) - MTC

When Monitored: With the ignition on.

Set Condition: This DTC will set if the A/C - Heater Control Module sees voltage above 4.88 volts on the Rear Temperature Feedback Signal circuit.

POSSIBLE CAUSES
5 VOLT SUPPLY CIRCUIT SHORTED TO VOLTAGE
CHECK REAR TEMPERATURE FEEDBACK SIGNAL CIRCUIT VOLTAGE
REAR TEMPERATURE FEEDBACK SIGNAL CIRCUIT OPEN
A/C - HEATER CONTROL MODULE
5 VOLT SUPPLY CIRCUIT SHORTED TO REAR TEMPERATURE FEEDBACK SIGNAL CIRCUIT
REAR TEMPERATURE RETURN CIRCUIT OPEN
REAR BLEND POTENTIOMETER
A/C - HEATER CONTROL MODULE

TEST	ACTION	APPLICABILITY
1	Turn the ignition off. Disconnect the Rear Blower Rear Control Switch C2 harness connector. Turn the ignition on. Measure the voltage of the 5 Volt Supply circuit. Is the voltage above 5.3 volts? Yes → Repair the 5 Volt Supply circuit for a short to voltage. Perform BODY VERIFICATION TEST - VER 1. No → Go To 2	All
2	Turn the ignition off. Disconnect the Rear Blower Rear Control Switch C2 harness connector. Turn the ignition on. Measure the voltage of the Rear Temperature Feedback Signal circuit. What voltage is present? Above 5.1 Volts Repair the Rear Temperature Feedback Signal circuit for a short to voltage. Perform BODY VERIFICATION TEST - VER 1. Below 0.25 Volts Go To 3 Between 0.25 & 5.1 Volts Go To 4	All

REAR BLEND POT CIRCUIT OPEN (ACTIVE) - MTC — Continued

TEST	ACTION	APPLICABILITY
3	Turn the ignition off. Disconnect the A/C - Heater Control Module C1 harness connector. Disconnect the Rear Blower Rear Control Switch C2 harness connector. Measure the resistance of the Rear Temperature Feedback Signal circuit between the A/C - Heater Control Module C1 harness connector and the Rear Blower Rear Control Switch C2 harness connector. Is the resistance below 5.0 ohms? Yes → Replace the A/C - Heater Control Module in accordance with the Service Information. Perform BODY VERIFICATION TEST - VER 1. No → Repair the Rear Temperature Feedback Signal circuit for an open. Perform BODY VERIFICATION TEST - VER 1.	All
4	Turn the ignition off. Disconnect the A/C - Heater Control Module C1 harness connector. Disconnect the Rear Blower Rear Control Switch C2 harness connector. Measure the resistance between the 5 Volt Supply circuit and the Rear Temperature Feedback Signal circuit. Is the resistance above 100K ohms? Yes → Go To 5 No → Repair the 5 Volt Supply circuit for a short to the Rear Temperature Feedback Signal circuit. Perform BODY VERIFICATION TEST - VER 1.	All
5	Turn the ignition off. Disconnect the A/C - Heater Control Module C1 harness connector. Disconnect the Rear Blower Rear Control Switch C2 harness connector. Measure the resistance of the Rear Temperature Return circuit between the A/C - Heater Control Module C1 harness connector and the Rear Blower Rear Control Switch C2 harness connector. Is the resistance below 5.0 ohms? Yes → Go To 6 No → Repair the Rear Temperature Return circuit for an open. Perform BODY VERIFICATION TEST - VER 1.	All

REAR BLEND POT CIRCUIT OPEN (ACTIVE) - MTC — Continued

TEST	ACTION	APPLICABILITY
6	Turn the ignition off. Disconnect the A/C - Heater Control Module C1 harness connector. **NOTE: Make sure that the Rear Blower Rear Control Switch C2 harness connector is connected to the Rear Blower Rear Control Switch.** Measure the resistance of the Rear Blower Rear Control Switch, Rear Blend Potentiometer as follows: Turn the Rear Blend knob to full hot. Measure the resistance between the 5 Volt Supply circuit and the Rear Temperature Feedback Signal circuit at the A/C - Heater Control Module C1 harness connector. The resistance should be approximately 800 ohms. Slowly rotate the Rear Blend knob from full hot to full cold while viewing the DVOM. The reading should change fluidly from approximately 800 to 10.5K ohms. Turn the Rear Blend knob to full hot. Measure the resistance between the 5 Volt Supply circuit and the Rear Temperature Return circuit at the A/C - Heater Control Module C1 harness connector. The resistance should be approximately 10.9K ohms. Slowly rotate the Rear Blend knob from full hot to full cold while viewing the DVOM. The reading should stay steady at approximately 10.9K ohms. Turn the Rear Blend knob to full hot. Measure the resistance between the Rear Temperature Return circuit and the Rear Temperature Feedback Signal circuit at the A/C - Heater Control Module C1 harness connector. The resistance should be approximately 10.2K ohms. Slowly rotate the Rear Blend knob from full hot to full cold while viewing the DVOM. The reading should change fluidly from approximately 10.2K to 800 ohms. Are all of the resistance measurements as specified? Yes → Replace the A/C - Heater Control Module in accordance with the Service Information. Perform BODY VERIFICATION TEST - VER 1. No → Replace the Rear Blower Rear Control Switch in accordance with the Service Information. Perform BODY VERIFICATION TEST - VER 1.	All

Symptom:
REAR BLEND POT CIRCUIT SHORT (ACTIVE) - MTC

When Monitored and Set Condition:

REAR BLEND POT CIRCUIT SHORT (ACTIVE) - MTC

When Monitored: When the ignition is on.

Set Condition: This DTC will set if the A/C - Heater Control Module sees voltage below 0.25 volts on the Rear Temperature Feedback Signal circuit.

POSSIBLE CAUSES
5 VOLT SUPPLY CIRCUIT SHORTED TO GROUND
5 VOLT SUPPLY CIRCUIT OPEN
5 VOLT SUPPLY CIRCUIT SHORTED TO REAR TEMPERATURE RETURN CIRCUIT
REAR TEMPERATURE FEEDBACK SIGNAL CIRCUIT SHORTED TO GROUND
REAR TEMPERATURE FEEDBACK SIGNAL CKT SHORTED TO REAR TEMPERATURE RETURN CKT
REAR BLEND POTENTIOMETER SHORTED
A/C - HEATER CONTROL MODULE

TEST	ACTION	APPLICABILITY
1	Turn the ignition off. Disconnect the A/C - Heater Control Module C1 harness connector. Disconnect the Rear Blower Rear Control Switch C2 harness connector. Measure the resistance between ground and the 5 Volt Supply circuit. Is the resistance above 100K ohms? Yes → Go To 2 No → Repair the 5 Volt Supply circuit for a short to ground. Perform BODY VERIFICATION TEST - VER 1.	All
2	Turn the ignition off. Disconnect the A/C - Heater Control Module C1 harness connector. Disconnect the Rear Blower Rear Control Switch C2 harness connector. Measure the resistance between the 5 Volt Supply circuit and the Rear Temperature Return circuit. Is the resistance above 100K ohms? Yes → Go To 3 No → Repair the 5 Volt Supply circuit for a short to the Rear Temperature Return circuit. Perform BODY VERIFICATION TEST - VER 1.	All

REAR BLEND POT CIRCUIT SHORT (ACTIVE) - MTC — Continued

TEST	ACTION	APPLICABILITY
3	Turn the ignition off. Disconnect the A/C - Heater Control Module C1 harness connector. Disconnect the Rear Blower Rear Control Switch C2 harness connector. Measure the resistance of the 5 Volt Supply circuit between the A/C - Heater Control Module C1 harness connector and the Rear Blower Rear Control Switch C2 harness connector. Is the resistance below 5.0 ohms? Yes → Go To 4 No → Repair the 5 Volt Supply circuit for an open. Perform BODY VERIFICATION TEST - VER 1.	All
4	Turn the ignition off. Disconnect the A/C - Heater Control Module C1 harness connector. Disconnect the Rear Blower Rear Control Switch C2 harness connector. Measure the resistance between ground and the Rear Temperature Feedback Signal circuit. Is the resistance above 100K ohms? Yes → Go To 5 No → Repair the Rear Temperature Feedback Signal circuit for a short to ground. Perform BODY VERIFICATION TEST - VER 1.	All
5	Turn the ignition off. Disconnect the A/C - Heater Control Module C1 harness connector. Disconnect the Rear Blower Rear Control Switch C2 harness connector. Measure the resistance between the Rear Temperature Feedback Signal circuit and the Rear Temperature Return circuit. Is the resistance above 100K ohms? Yes → Go To 6 No → Repair the Rear Temperature Feedback Signal circuit for a short to the Rear Temperature Return circuit. Perform BODY VERIFICATION TEST - VER 1.	All
6	Turn the ignition off. Make sure that the A/C - Heater Control Module C1 harness connector is connected to the A/C - Heater Control Module. Disconnect the Rear Blower Rear Control Switch C2 harness connector. Turn the ignition on. With the DRBIII®, read active HVAC DTCs. Does the DRBIII® display: Rear Blend Pot Circuit Short? Yes → Replace the A/C - Heater Control Module in accordance with the Service Information. Perform BODY VERIFICATION TEST - VER 1. No → Replace the Rear Blower Rear Control Switch in accordance with the Service Information. Perform BODY VERIFICATION TEST - VER 1.	All

Symptom:
TX FAILURE (ACTIVE) - MTC

When Monitored and Set Condition:

TX FAILURE (ACTIVE) - MTC

When Monitored: When the ignition is on.

Set Condition: This DTC will set if the A/C - Heater Control Module is unable to send a message.

POSSIBLE CAUSES
ATTEMPT TO COMMUNICATE WITH THE HVAC MODULE
ADDITIONAL CODE(S) PRESENT
ATTEMPT TO COMMUNICATE WITH THE PCM/ECM, BCM, AND FCM
A/C - HEATER CONTROL MODULE

TEST	ACTION	APPLICABILITY
1	Turn the ignition on. With the DRBIII®, attempt to communicate with the HVAC Module. Was the DRBIII® able to I/D or communicate with the HVAC Module? Yes → Go To 2 No → Refer to Communication for the related symptom(s). Perform BODY VERIFICATION TEST - VER 1.	All
2	Turn the ignition on. With the DRBIII®, read HVAC DTCs. Does the DRBIII® display any additional HVAC DTCs? Yes → Return to the symptom list and choose the symptom(s). Perform BODY VERIFICATION TEST - VER 1. No → Go To 3	All
3	Turn the ignition on. With the DRBIII®, attempt to communicate with the PCM/ECM. With the DRBIII®, attempt to communicate with the BCM. With the DRBIII®, attempt to communicate with the FCM. Was the DRBIII® able to I/D or communicate with the PCM/ECM, BCM and FCM? Yes → Go To 4 No → Refer to Communication for the related symptom(s). Perform BODY VERIFICATION TEST - VER 1.	All

TX FAILURE (ACTIVE) - MTC — Continued

TEST	ACTION	APPLICABILITY
4	Turn the ignition on. With the DRBIII®, erase HVAC DTCs. Cycle the ignition switch and wait approximately 1 minute. With the DRBIII®, read HVAC DTCs. Did this DTC reset? Yes → Replace the A/C - Heater Control Module in accordance with the Service Information. Perform BODY VERIFICATION TEST - VER 1. No → Test Complete.	All

Symptom List:

***A/C STATUS INDICATOR FLASHING - MTC**
***RECIRC STATUS INDICATOR FLASHING - MTC**

Test Note: All symptoms listed above are diagnosed using the same tests. The title for the tests will be *A/C STATUS INDICATOR FLASHING - MTC.

POSSIBLE CAUSES
AC COOLDOWN TEST NEEDS TO BE RUN
HVAC DOOR RECALIBRATION NEEDS TO BE RUN

TEST	ACTION	APPLICABILITY
1	Turn the ignition on. Which status indicator is flashing on the A/C-Heater Control Module? A/C Status Indicator Go To 2 RECIRC Status Indicator Go To 3	All
2	**CAUTION: The evaporator temperature must be above 12.7°C (55°F) and the work area ambient temperature must be above 21.1°C (70°F) to test A/C operation.** **NOTE: The A/C status indicator will flash twice per second to indicate that the AC Cooldown Test needs to be run.** **NOTE: The A/C status indicator will stop flashing twice per second if either the AC Cooldown Test returns passed, or if any button on the control is pressed, or if the ignition is cycled and the odometer shows greater than eight miles.** **NOTE: On RS vehicles, the Rear Wipe/Wash and A/C status indicators will flash alternately while the AC Cooldown Test is running. On RG vehicles, the Power and A/C status indicators will flash alternately while the AC Cooldown Test is running.** Start the engine. Turn the Blower control to the high speed position. With the DRBIII® in HVAC, System Tests, actuate the AC Cooldown Test. Does the DRBIII® display: Cooldown Test Passed? Yes → Test Complete. No → Return to the symptom list and choose the symptom(s). Perform BODY VERIFICATION TEST - VER 1.	All

*A/C STATUS INDICATOR FLASHING - MTC — Continued

TEST	ACTION	APPLICABILITY
3	**NOTE: The RECIRC status indicator will flash twice per second to indicate that the HVAC Door Recalibration Test needs to be run.** **NOTE: The RECIRC status indicator will stop flashing twice per second if either the HVAC Door Recalibration Test returns passed, or if any button on the control is pressed, or if the ignition is cycled and the odometer shows greater than eight miles.** **NOTE: On RS vehicles, the Rear Wipe/Wash & RECIRC status indicators will flash alternately while the HVAC Door Recal Test runs. On RG vehicles, the Power & RECIRC status indicators will flash alternately while the HVAC Door Recal Test runs.** With the DRBIII® in HVAC, System Tests, actuate the HVAC Door Recalibration Test. Does the DRBIII® display: Recalibration Test Passed? Yes → Test Complete. No → Return to the symptom list and choose the symptom(s). Perform BODY VERIFICATION TEST - VER 1.	All

Symptom:

*BLEND/MODE/RECIRC DOOR OPERATION IMPROPER -- DUAL & THREE-ZONE MTC

POSSIBLE CAUSES
CHECK FOR ACTIVE HVAC DTCS
CHECK FOR HVAC DO0R RECALIBRATION FAULT MESSAGES
MODE DOOR ACTUATOR/LINKAGE/DOOR
PASSENGER BLEND DOOR ACTUATOR/LINKAGE/DOOR
DRIVER BLEND DOOR ACTUATOR/LINKAGE/DOOR
RECIRCULATION DOOR ACTUATOR/LINKAGE/DOOR
REAR MODE DOOR ACTUATOR/LINKAGE/DOOR
REAR BLEND DOOR ACTUATOR/LINKAGE/DOOR

TEST	ACTION	APPLICABILITY
1	**NOTE: All Actuator Circuit Test fault messages and Overcurrent DTCs must be repaired before diagnosing Calibration fault messages.** Turn the ignition on. With the DRBIII®, read active HVAC DTCs. Does the DRBIII® display any active HVAC DTCs? Yes → Return to the symptom list and choose the symptom(s). Perform BODY VERIFICATION TEST - VER 1. No → Go To 2	All
2	**NOTE: All Actuator Circuit Test fault messages and Overcurrent DTCs must be repaired before diagnosing Calibration fault messages.** Turn the ignition on. With the DRBIII® in HVAC, System Tests, actuate the HVAC Door Recalibration Test. Does the DRBIII® display any HVAC Door Recalibration fault messages? Yes → Return to the symptom list and choose the symptom(s). Perform BODY VERIFICATION TEST - VER 1. No → Go To 3	All

*BLEND/MODE/RECIRC DOOR OPERATION IMPROPER -- DUAL & THREE-ZONE MTC — Continued

TEST	ACTION	APPLICABILITY
3	Which door did customer ID as faulty? Mode Door Go To 4 Passenger Blend Door Go To 5 Driver Blend Door Go To 6 Recirculation Door Go To 7 Rear Mode Door Go To 8 Rear Blend Door Go To 9	All
4	Start the engine. Turn the blower control to the high speed position. Turn the mode control to each door position for a minimum of 30 seconds and check for airflow from the corresponding vents. Does air flow from the correct vents for each door position? Yes → Test Complete. No → Remove door actuator from A/C Heater Housing Assy. By hand, attempt to rotate door actuator in both directions. Also, inspect for disconnected, missing, or broken door actuator linkage. Repair as necessary in accordance with the Service Information. Perform BODY VERIFICATION TEST - VER 1.	All
5	Start the engine. Turn the blower control to the high speed position. Turn the mode control to the panel position. Move the passenger blend control to the full hot position. Move the passenger blend control to the full cold position, in 25% increments, while checking for a change in airflow air temperature coming from the passenger's panel vents. Does the airflow air temperature change with respect to the position of the blend control? Yes → Test Complete. No → Remove door actuator from A/C-Heater Housing Assy. By hand, attempt to rotate the door actuator in both directions. Also, inspect for disconnected, missing, or broken door actuator linkage. Repair as necessary in accordance with the Service Information. Perform BODY VERIFICATION TEST - VER 1.	All

*BLEND/MODE/RECIRC DOOR OPERATION IMPROPER -- DUAL & THREE-ZONE MTC — Continued

TEST	ACTION	APPLICABILITY
6	Start the engine. Turn the blower control to the high speed position. Turn the mode control to the panel position. Move the driver blend control to the full hot position. Move the driver blend control to the full cold position, in 25% increments, while checking for a change in airflow air temperature coming from the driver's panel vents. Does the airflow air temperature change with respect to the position of the blend control? Yes → Test Complete. No → Remove door actuator from A/C-Heater Housing Assy. By hand, attempt to rotate the door actuator in both directions. Also, inspect for disconnected, missing, or broken door actuator linkage. Repair as necessary in accordance with the Service Information. Perform BODY VERIFICATION TEST - VER 1.	All
7	Start the engine. Turn the blower control to the high speed position. Turn the mode control to the panel position. Make sure that recirc is switched off (status indicator not illuminated). Press the recirc switch on (status indicator illuminated). The sound of the air flowing through the ducts should get louder as the recirculation door opens to bring in recirc air. Does the sound of the airflow get louder after pressing the recirc switch on? Yes → Test Complete. No → Remove door actuator from A/C-Heater Housing Assy. By hand, attempt to rotate the door actuator in both directions. Also, inspect for disconnected, missing, or broken door actuator linkage. Repair as necessary in accordance with the Service Information. Perform BODY VERIFICATION TEST - VER 1.	All
8	Start the engine. Turn the rear blower control on the A/C-Heater Control Module to the rear control position. Turn the rear blower control on the Rear A/C-Heater Control to the high speed position. Turn the rear blend control to the full cold position and check for airflow from the corresponding vents. Turn the rear blend control to the full hot position and check for airflow from the corresponding vents. Does air flow from the correct vents for each door position? Yes → Test Complete. No → Remove door actuator from Rear A/C-Heater Housing Assy. By hand, attempt to rotate door actuator in both directions. Also, inspect for disconnected, missing, or broken door actuator linkage. Repair as necessary in accordance with the Service Information. Perform BODY VERIFICATION TEST - VER 1.	All

*BLEND/MODE/RECIRC DOOR OPERATION IMPROPER -- DUAL & THREE-ZONE MTC — Continued

TEST	ACTION	APPLICABILITY
9	Start the engine. Turn the rear blower control on the A/C-Heater Control Module to the rear control position. Turn the rear blower control on the Rear A/C-Heater Control to the high speed position. Turn the rear blend control to the full cold position. Turn the rear blend control to the full hot position, in 25% increments, while checking for a change in airflow air temperature coming from the vents. Does the airflow air temperature change with respect to the position of the blend control? Yes → Test Complete. No → Remove door actuator from Rear A/C-Heater Housing Assy. By hand, attempt to rotate door actuator in both directions. Also, inspect for disconnected, missing, or broken door actuator linkage. Repair as necessary in accordance with the Service Information. Perform BODY VERIFICATION TEST - VER 1.	All

Symptom:

***BLEND/MODE/RECIRC DOOR OPERATION IMPROPER -- SINGLE-ZONE MTC**

POSSIBLE CAUSES
CHECK FOR ACTIVE HVAC DTCS
CHECK FOR HVAC DO0R RECALIBRATION FAULT MESSAGES
MODE DOOR ACTUATOR/LINKAGE/DOOR
BLEND DOOR ACTUATOR/LINKAGE/DOOR
RECIRCULATION DOOR ACTUATOR/LINKAGE/DOOR

TEST	ACTION	APPLICABILITY
1	**NOTE: All Actuator Circuit Test fault messages and Overcurrent DTCs must be repaired before diagnosing Calibration fault messages.** Turn the ignition on. With the DRBIII®, read active HVAC DTCs. Does the DRBIII® display any active HVAC DTCs? Yes → Return to the symptom list and choose the symptom(s). Perform BODY VERIFICATION TEST - VER 1. No → Go To 2	All
2	**NOTE: All Actuator Circuit Test fault messages and Overcurrent DTCs must be repaired before diagnosing Calibration fault messages.** Turn the ignition on. With the DRBIII® in HVAC, System Tests, actuate the HVAC Door Recalibration Test. Does the DRBIII® display any HVAC Door Recalibration fault messages? Yes → Return to the symptom list and choose the symptom(s). Perform BODY VERIFICATION TEST - VER 1. No → Go To 3	All
3	Which door did customer ID as faulty? Mode Door Go To 4 Blend Door Go To 5 Recirculation Door Go To 6	All

*BLEND/MODE/RECIRC DOOR OPERATION IMPROPER -- SINGLE-ZONE MTC — Continued

TEST	ACTION	APPLICABILITY
4	Start the engine. Turn the blower control to the high speed position. Turn the mode control to each door position for a minimum of 30 seconds and check for airflow from the corresponding vents. Does air flow from the correct vents for each door position? Yes → Test Complete. No → Remove door actuator from A/C Heater Housing Assy. By hand, attempt to rotate door actuator in both directions. Also, inspect for disconnected, missing, or broken door actuator linkage. Repair as necessary in accordance with the Service Information. Perform BODY VERIFICATION TEST - VER 1.	All
5	Start the engine. Turn the blower control to the high speed position. Turn the mode control to the panel position. Turn the blend control to the full hot position. Turn the blend control to the full cold position, in 25% increments, while checking for a change in airflow air temperature coming from the panel vents. Does the airflow air temperature change with respect to the position of the blend control? Yes → Test Complete. No → Remove door actuator from A/C-Heater Housing Assy. By hand, attempt to rotate the door actuator in both directions. Also, inspect for disconnected, missing, or broken door actuator linkage. Repair as necessary in accordance with the Service Information. Perform BODY VERIFICATION TEST - VER 1.	All
6	Start the engine. Turn the blower control to the high speed position. Turn the mode control to the panel position. Make sure that recirc is switched off (status indicator not illuminated). Press the recirc switch on (status indicator illuminated). The sound of the air flowing through the ducts should get louder as the recirculation door opens to bring in recirc air. Does the sound of the airflow get louder after pressing the recirc switch on? Yes → Test Complete. No → Remove door actuator from A/C-Heater Housing Assy. By hand, attempt to rotate the door actuator in both directions. Also, inspect for disconnected, missing, or broken door actuator linkage. Repair as necessary in accordance with the Service Information. Perform BODY VERIFICATION TEST - VER 1.	All

Symptom:

***FRONT A/C - HEATER CONTROL ILLUMINATION INOPERATIVE - MTC**

POSSIBLE CAUSES
CHECK FOR HVAC DTCS
CHECK FOR BCM DTCS
A/C - HEATER CONTROL MODULE
PANEL LAMPS DRIVER CIRCUIT OPEN
BODY CONTROL MODULE - PANEL LAMPS DRIVER OPEN

TEST	ACTION	APPLICABILITY
1	Turn the ignition on. With the DRBIII®, read HVAC DTCs. Does the DRBIII® display any HVAC DTCs? Yes → Return to the symptom list and choose the symptom(s). Perform BODY VERIFICATION TEST - VER 1. No → Go To 2	All
2	Turn the ignition on. With the DRBIII®, read the BCM DTCs. Does DRBIII® display Headlamp Switch: Mismatch; STG; Open; or Panel Dim Output Short? Yes → Refer to symptoms Headlamp Switch Mismatch, Headlamp Switch Shorted To Ground, and Headlamp Switch Open in the Exterior Lighting catagory. Refer to symptom Panel Dimming Output Short in the Instrument Cluster catagory. Perform BODY VERIFICATION TEST - VER 1. No → Go To 3	All
3	Turn the ignition off. Rotate the Panel Lamps Dimmer switch to the off position. Disconnect the A/C - Heater Control C1 harness connector. Turn the Headlamp switch on. Measure the voltage of the Panel Lamps Driver circuit while rotating the Panel Lamps Dimmer switch from the off position to the full brightness position. Does the voltage change from approximately 2.5 volts to 11.5 volts? Yes → Replace the A/C - Heater Control Module in accordance with the Service Information. Perform BODY VERIFICATION TEST - VER 1. No → Go To 4	All

*FRONT A/C - HEATER CONTROL ILLUMINATION INOPERATIVE - MTC

— Continued

TEST	ACTION	APPLICABILITY
4	Turn the ignition off. Disconnect the A/C - Heater Control C1 harness connector. Disconnect the Body Control Module C4 harness connector. Measure the resistance of the Panel Lamps Driver circuit between the A/C - Heater Control C1 harness connector and the Body Control Module C4 harness connector. Is the resistance below 5 ohms? Yes → Replace the Body Control Module in accordance with the Service Information. Perform BODY VERIFICATION TEST - VER 1. No → Repair the Panel Lamps Driver circuit for an open. Perform BODY VERIFICATION TEST - VER 1.	All

Symptom:

*FRONT BLOWER MOTOR INOPERATIVE - MTC

POSSIBLE CAUSES
FRONT CONTROL MODULE (FCM) DTC(S) PRESENT
IPM FUSE #10
FUSED FRONT BLOWER MOTOR RELAY OUTPUT CIRCUIT SHORTED TO GROUND
FRONT BLOWER MOTOR RESISTOR BLOCK SHORTED TO GROUND
FRONT BLOWER MOTOR RESISTOR BLOCK SHORTED TO GROUND
BLOWER MOTOR
BLOWER MOTOR
A/C - HEATER CONTROL MODULE
GROUND CIRCUIT OPEN
BLOWER MOTOR HIGH DRIVER CIRCUIT OPEN
FRONT BLOWER MOTOR RESISTOR BLOCK OPEN
FRONT BLOWER MOTOR RESISTOR BLOCK OPEN
IPM - OPEN CIRCUIT
IPM - OPEN CIRCUIT
FRONT BLOWER MOTOR RELAY
IPM - OPEN CIRCUIT
FUSED FRONT BLOWER MOTOR RELAY OUTPUT CIRCUIT OPEN

TEST	ACTION	APPLICABILITY
1	With the DRBIII® in Front Control Module, read the active DTCs. Are any active FCM DTCs present? Yes → For FCM DTCs related to the blower relay circuits, refer to the Heating & A/C catagory. For all other FCM DTCs, refer to the symptom list in the related catagory. Perform BODY VERIFICATION TEST - VER 1. No → Go To 2	All
2	Turn the ignition off. Remove and inspect Intelligent Power Module (IPM) Fuse #10. Is the fuse open? Yes → Go To 3 No → Go To 7	All

*FRONT BLOWER MOTOR INOPERATIVE - MTC — Continued

TEST	ACTION	APPLICABILITY
3	Replace IPM Fuse #10. Turn the ignition on. On RG vehicles, press the A/C - Heater Control power switch on. Operate the front blower in all speeds and modes. Does the blower motor operate properly without blowing the fuse? Yes → Check the Fused Front Blower Motor Relay Output circuit and the High Speed Blower Motor circuit for an intermittent short to ground. Repair as necessary. Perform BODY VERIFICATION TEST - VER 1. No → Go To 4	All
4	Turn the ignition off. Disconnect the Front Blower Motor Resistor Block C1 harness connector. Measure the resistance between ground and the Fused Front Blower Motor Relay Output circuit. Is the resistance below 10K ohms? Yes → Repair the Fused Front Blower Motor Relay Output circuit for a short to ground. Replace IPM Fuse #10. Perform BODY VERIFICATION TEST - VER 1. No → Go To 5	All
5	Turn the ignition off. Disconnect the Front Blower Motor Resistor Block C1 harness connector. Disconnect the Front Blower Motor Resistor Block C2 harness connector. On RS vehicles, measure the resistance between Front Blower Motor Resistor Block pin C2-2 and pins C2-1, C1-2, C1-3, C1-5, and C1-6. On RG vehicles, measure the resistance between Front Blower Motor Resistor Block pin C2-2 and pins C2-1, C1-1, C1-2, C1-3, C1-5, and C1-6. Is there continuity between pin C2-2 and any other pin? Yes → Replace the Front Blower Motor Resistor Block in accordance with the Service Information. Replace IPM Fuse #10. Perform BODY VERIFICATION TEST - VER 1. No → Go To 6	All
6	Turn the ignition off. Disconnect the Front Blower Motor Resistor Block C1 harness connector. Disconnect the Front Blower Motor Resistor Block C2 harness connector. On RS vehicles, measure the resistance between Front Blower Motor Resistor Block pin C1-4 and pins C2-1, C1-2, C1-3, C1-5, and C1-6. On RG vehicles, measure the resistance between Front Blower Motor Resistor Block pin C1-4 and pins C2-1, C1-1, C1-2, C1-3, C1-5, and C1-6. Is there continuity between pin C1-4 and any other pin? Yes → Replace the Front Blower Motor Resistor Block in accordance with the Service Information. Replace IPM Fuse #10. Perform BODY VERIFICATION TEST - VER 1. No → Replace the Blower Motor in accordance with the Service Information. Replace IPM Fuse #10. Perform BODY VERIFICATION TEST - VER 1.	All

*FRONT BLOWER MOTOR INOPERATIVE - MTC — Continued

TEST	ACTION	APPLICABILITY
7	Ensure IPM Fuse #10 is installed. Turn the ignition on. On RG vehicles, press the A/C - Heater Control power switch on. **NOTE: The test light must illuminate brightly. Compare the brightness to that of a direct connection to the battery.** Using a 12-volt test light connected to ground, back probe the High Speed Blower Motor circuit in the Front Blower Motor Resistor Block C2 harness connector. Does the test light illuminate brightly? Yes → Go To 8 No → Go To 12	All
8	On RG vehicles, press the A/C - Heater Control power switch off. Turn the ignition off. Using a jumper wire connected to ground, back probe the Rear Blower High Speed circuit in the Front Blower Motor Resistor Block C2 harness connector. Turn the ignition on. On RG vehicles, press the A/C - Heater Control power switch on. Does the blower motor run at high speed? Yes → Go To 9 No → Replace the Blower Motor in accordance with the Service Information. Perform BODY VERIFICATION TEST - VER 1.	All
9	On RG vehicles, press the A/C - Heater Control power switch off. Turn the ignition off. Disconnect the A/C - Heater Control Module C2 harness connector. Using a jumper wire connected to ground, back probe the Blower Motor High Driver circuit in the A/C - Heater Control Module C2 harness connector. Turn the ignition on. On RG vehicles, press the A/C - Heater Control power switch on. Does the blower motor run at high speed? Yes → Go To 10 No → Go To 11	All
10	Turn the ignition off. Disconnect the A/C - Heater Control Module C2 harness connector. Measure the resistance of the Ground circuit between the A/C - Heater Control Module C2 harness connector and ground. Is the resistance below 5.0 ohms? Yes → Replace the A/C - Heater Control Module in accordance with the Service Information. Perform BODY VERIFICATION TEST - VER 1. No → Repair the Ground circuit for an open. Perform BODY VERIFICATION TEST - VER 1.	All

*FRONT BLOWER MOTOR INOPERATIVE - MTC — Continued

TEST	ACTION	APPLICABILITY
11	Turn the ignition off. Disconnect the A/C - Heater Control Module C2 harness connector. Disconnect the Front Blower Motor Resistor Block C1 harness connector. Measure the resistance of the Blower Motor High Driver circuit between the A/C - Heater Control Module C2 harness connector and the Front Blower Motor Resistor Block C1 harness connector. Is the resistance below 5 ohms? Yes → Replace the Front Blower Motor Resistor Block in accordance with the Service Information. Perform BODY VERIFICATION TEST - VER 1. No → Repair the Blower Motor High Driver circuit for an open. Perform BODY VERIFICATION TEST - VER 1.	All
12	Turn the ignition on. On RG vehicles, press the A/C - Heater Control power switch on. **NOTE: The test light must illuminate brightly. Compare the brightness to that of a direct connection to the battery.** Using a 12-volt test light connected to ground, back probe the Fused Front Blower Motor Relay Output circuit in the Front Blower Motor Resistor Block C1 harness connector. Does the test light illuminate brightly? Yes → Replace the Front Blower Motor Resistor Block in accordance with the Service Information. Perform BODY VERIFICATION TEST - VER 1. No → Go To 13	All
13	Turn the ignition off. Remove the Front Blower Motor Relay from the IPM. **NOTE: The test light must illuminate brightly. Compare the brightness to that of a direct connection to the battery.** Using a 12-volt test light connected to ground, probe cavity 30 of the Front Blower Motor Relay connector. Does the test light illuminate brightly? Yes → Go To 14 No → Replace the IPM in accordance with the Service Information. Perform BODY VERIFICATION TEST - VER 1.	All
14	Turn the ignition off. Remove the Front Blower Motor Relay from the IPM. Remove IPM Fuse #10. Measure the resistance between cavity 87 of the Front Blower Motor Relay connector and IPM Fuse #10 (power input cavity). Is the resistance below 5 ohms? Yes → Go To 15 No → Replace the IPM in accordance with the Service Information. Perform BODY VERIFICATION TEST - VER 1.	All

*FRONT BLOWER MOTOR INOPERATIVE - MTC — Continued

TEST	ACTION	APPLICABILITY
15	Turn the ignition off. Make sure that the Front Blower Motor Relay is installed. Remove IPM Fuse #10. Turn the ignition on. **NOTE: The test light must illuminate brightly. Compare the brightness to that of a direct connection to the battery.** Using a 12-volt test light connected to ground, probe IPM Fuse #10 (power input cavity). Does the test light illuminate brightly? Yes → Go To 16 No → Replace the Front Blower Motor Relay in accordance with the Service Information. Perform BODY VERIFICATION TEST - VER 1.	All
16	Turn the ignition off. Remove IPM Fuse #10. Disconnect the IPM C6 harness connector. Measure the resistance between IPM Fuse #10 (power output cavity) and cavity 7 of the IPM C6 connector (IPM side). Is the resistance below 5 ohms? Yes → Repair the Fused Front Blower Motor Relay Output circuit for an open. Perform BODY VERIFICATION TEST - VER 1. No → Replace the IPM in accordance with the Service Information. Perform BODY VERIFICATION TEST - VER 1.	All

Symptom:
*FRONT BLOWER MOTOR SPEEDS INCORRECT - MTC

POSSIBLE CAUSES
BLOWER MOTOR DRIVER CIRCUIT(S) SHORTED TO GROUND
BLOWER MOTOR DRIVER CIRCUIT(S) SHORTED TO VOLTAGE
BLOWER MOTOR DRIVER CIRCUITS SHORTED TOGETHER
A/C - HEATER CONTROL MODULE - SPEEDS INCORRECT
BLOWER MOTOR DRIVER CIRCUIT(S) OPEN
BLOWER MOTOR RESISTOR BLOCK - OPEN SPEED

TEST	ACTION	APPLICABILITY
1	Turn the ignition off. Disconnect the A/C - Heater Control Module C2 harness connector. Disconnect the Front Blower Motor Resistor Block C1 harness connector. Measure the resistance between ground and each of the Blower Motor Driver circuits. Is the resistance below 10K ohms on any of the circuits? Yes → Repair all Blower Motor Driver circuits with a resistance below 10K ohms for a short to ground. Perform BODY VERIFICATION TEST - VER 1. No → Go To 2	All
2	Turn the ignition off. Ensure that the Front Blower Motor Resistor Block C1 harness connector is connected to the Front Blower Motor Resistor Block. Disconnect the A/C - Heater Control Module C2 harness connector. Turn the ignition on. On RG vehicles, press the A/C - Heater Control power switch on. **NOTE: The test light must illuminate brightly. Compare the brightness to that of a direct connection to the battery.** Using a 12-volt test light connected to ground, back probe each of the Blower Motor Driver circuits (cavities 2, 3, 9, and 10 for RS vehicles) (cavities 2, 3, 5, 9, 10 for RG vehicles). Does the test light illuminate brightly on each circuit? Yes → Go To 3 No → Go To 5	All

*FRONT BLOWER MOTOR SPEEDS INCORRECT - MTC — Continued

TEST	ACTION	APPLICABILITY
3	On RG vehicles, press the A/C - Heater Control power switch off. Turn the ignition off. Disconnect the A/C - Heater Control Module C2 harness connector. Disconnect the Front Blower Motor Resistor Block C1 harness connector. Turn the ignition on. Measure the voltage of each of the Blower Motor Driver circuits (cavities 2, 3, 9, and 10 for RS vehicles) (cavities 2, 3, 5, 9, 10 for RG vehicles) in the A/C - Heater Control Module C2 harness connector. Is there any voltage present? Yes → Repair all Blower Motor Driver circuits with voltage present for a short to voltage. Perform BODY VERIFICATION TEST - VER 1. No → Go To 4	All
4	Turn the ignition off. Disconnect the A/C - Heater Control Module C2 harness connector. Disconnect the Front Blower Motor Resistor Block C1 harness connector. On RS vehicles, measure the resistance between the Blower Motor Low Driver circuit and the M1, M2, and Blower Motor High Driver circuits. On RS vehicles, measure the resistance between the Blower Motor M1 Driver circuit and the M2, and Blower Motor High Driver circuits. On RS vehicles, measure the resistance between the Blower Motor M2 Driver circuit and the Blower Motor High Driver circuit. On RG vehicles, measure the resistance between the Blower Motor Low Driver circuit and the M1, M2, M3 and Blower Motor High Driver circuits. On RG vehicles, measure the resistance between the Blower Motor M1 Driver circuit and the M2, M3, and Blower Motor High Driver circuits. On RG vehicles, measure the resistance between the Blower Motor M2 Driver circuit and the M3 and Blower Motor High Driver circuit. On RG vehicles, measure the resistance between the Blower Motor M3 Driver circuit and the Blower Motor High Driver circuit. Is the resistance below 10K ohms between any of the circuits? Yes → Repair the shorted Blower Motor Driver circuits. Perform BODY VERIFICATION TEST - VER 1. No → Replace the A/C - Heater Control Module in accordance with the Service Information. Perform BODY VERIFICATION TEST - VER 1.	All
5	Turn the ignition off. Disconnect the A/C - Heater Control Module C2 harness connector. Disconnect the Front Blower Motor Resistor Block C1 harness connector. Measure the resistance of each Blower Motor Driver circuit between the Front Blower Motor Resistor Block C1 harness connector and the A/C - Heater Control Module C2 harness connector. Is the resistance below 5.0 ohms on each of the circuits? Yes → Replace the Front Blower Motor Resistor Block in accordance with the Service Information. Perform BODY VERIFICATION TEST - VER 1. No → Repair all Blower Motor Driver circuits with a resistance above 5 ohms for an open. Perform BODY VERIFICATION TEST - VER 1.	All

Symptom:

*HVAC SYSTEM TEST - MTC

POSSIBLE CAUSES
ATTEMPT TO COMMUNICATE WITH THE PCM/ECM, THE BCM, AND THE FCM
CHECK FOR HVAC RELATED DTCS IN THE PCM/ECM
CHECK FOR BCM DTCS
CHECK FOR FCM DTCS
CHECK FOR ACTIVE HVAC DTCS AND SYSTEM TESTS FAULT MESSAGES
CHECK FOR HVAC RELATED DTCS IN THE PCM/ECM
MANUAL A/C SYSTEM TEST

TEST	ACTION	APPLICABILITY
1	Turn the ignition on. With the DRBIII®, attempt to communicate with the Powertrain/Engine Control Module. With the DRBIII®, attempt to communicate with the Body Control Module. With the DRBIII®, attempt to communicate with the Front Control Module. Was the DRBIII® able to communicate with the PCM/ECM, the BCM, and the FCM? Yes → Go To 2 No → Refer to the communication category for the related symptom(s). Perform BODY VERIFICATION TEST - VER 1.	All
2	With the DRBIII®, read Powertrain/Engine Computer DTCs. Are any HVAC related DTCs present? Yes → Refer to the Powertrain Diagnostic Procedures Manual for the related symptom(s). Perform BODY VERIFICATION TEST - VER 1. No → Go To 3	All
3	With the DRBIII®, read Body Computer DTCs. Are any DTCs present? Yes → Refer to the appropriate catagory for the related symptom(s). Perform BODY VERIFICATION TEST - VER 1. No → Go To 4	All
4	With the DRBIII®, read Front Control Module DTCs. Are any DTCs present? Yes → For FCM DTCs related to the blower relay circuits, refer to the Heating & A/C catagory. For all other FCM DTCs, refer to the symptom list in the related catagory. Perform BODY VERIFICATION TEST - VER 1. No → Go To 5	All

*HVAC SYSTEM TEST - MTC — Continued

TEST	ACTION	APPLICABILITY
5	**CAUTION: The evaporator temperature must be above 12.7°C (55°F) and the work area ambient temperature must be above 21.1°C (70°F) to test the A/C system operation.** **NOTE: Active codes must be resolved before diagnosing stored codes.** **NOTE: Anytime a DTC becomes active, or a Cooldown Test fault message, Actuator Circuit Test fault message, or HVAC Door Recalibration fault message is displayed, proceed to the conclusion question.** **NOTE: If multiple codes appear, diagnose those that relate to a short circuit first.** Start the engine. On RG vehicles, press the A/C - Heater Control power switch on. Turn the mode select control to the panel position. Verify that the front blower motor and, if equipped, rear blower motor operates correctly in all speeds from each control. Diagnose and repair all blower related faults before proceeding with this test. Turn the front blower motor control to the high speed position. **NOTE: Before actuating the AC Cooldown Test, verify that the A/C compressor is not running. If the compressor is running, turn the A/C off and allow the evaporator to warm up before proceeding with the test.** With the DRBIII® in HVAC, System Tests, actuate the AC Cooldown Test. Turn the front blower motor control to the low speed position. If equipped, turn the rear blower motor control to the rear position. Set the passenger blend control to the full cold position. If equipped, set the zone/driver blend control to the full cold position. If equipped, on the Rear Blower Rear Control, set the rear blend/mode control to the full cold position. Monitor the DRBIII® for active HVAC DTCs while performing the following test steps. Turn the mode select control to the defrost position, wait 30 seconds, and then turn it back to the panel position. Press the recirculation mode switch on, wait 30 seconds, and then press it off. Press the A/C mode switch on, wait 30 seconds, and then press it off. Press the rear window defogger switch on, wait 30 seconds, and then press it off. Move the passenger blend control from full cold to full hot, wait 30 seconds, and then move it back to full cold. If equipped, move the zone/driver blend control from full cold to full hot, wait 30 seconds, and then move it back to full cold. If equipped, on the Rear Blower Rear Control, move the rear blend/mode control from full cold to full hot, wait 30 seconds, and then move it back to full cold. On RS vehicles, press and hold the Rear Wiper/Washer switch for approximately 3 seconds, and then release the switch. On RS vehicles, press the Rear Wiper/Washer switch on, wait 30 seconds, and then press it off. With the DRBIII® in HVAC, System Tests, actuate the Actuator Circuit Test. With the DRBIII® in HVAC, System Tests, actuate the HVAC Door Recalibration Test. Does the DRBIII® display any active HVAC DTC(s) or System Tests fault message(s)? Yes → Return to the symptom list and choose the symptom(s). Perform BODY VERIFICATION TEST - VER 1. No → Go To 6	All

*HVAC SYSTEM TEST - MTC — Continued

TEST	ACTION	APPLICABILITY
6	With the DRBIII®, read PCM/ECM DTCs. Are any HVAC related DTCs present? Yes → Refer to the Powertrain Diagnostic Procedures Manual for the related symptom(s). Perform BODY VERIFICATION TEST - VER 1. No → Recheck the climate control system performance. Refer to Service Information for additional information. Perform BODY VERIFICATION TEST - VER 1.	All

Symptom:

***REAR A/C - HEATER CONTROL ILLUMINATION INOPERATIVE - MTC**

POSSIBLE CAUSES
CHECK FOR HVAC DTCS
CHECK FOR BCM DTCS
INOPERATIVE BULB
GROUND CIRCUIT OPEN
REAR BLOWER REAR CONTROL SWITCH
PANEL LAMPS DRIVER CIRCUIT OPEN
BODY CONTROL MODULE - PANEL LAMPS DRIVER OPEN

TEST	ACTION	APPLICABILITY
1	Turn the ignition on. With the DRBIII®, read HVAC DTCs. Does the DRBIII® display any HVAC DTCs? Yes → Return to the symptom list and choose the symptom(s). Perform BODY VERIFICATION TEST - VER 1. No → Go To 2	All
2	Turn the ignition on. With the DRBIII®, read the BCM DTCs. Does DRBIII® display Headlamp Switch: Mismatch; STG; Open; or Panel Dim Output Short? Yes → Refer to symptoms Headlamp Switch Mismatch, Headlamp Switch Shorted To Ground, and Headlamp Switch Open in the Exterior Lighting catagory. Refer to symptom Panel Dimming Output Short in the Instrument Cluster catagory. Perform BODY VERIFICATION TEST - VER 1. No → Go To 3	All
3	Turn the ignition off. Remove the bulb from the Rear Blower Rear Control Switch. **NOTE: Hold the bulb in front of a lamp to see the filament.** Inspect the bulb. Is the bulb Ok? Yes → Go To 4 No → Replace the bulb. Perform BODY VERIFICATION TEST - VER 1.	All

*REAR A/C - HEATER CONTROL ILLUMINATION INOPERATIVE - MTC

— Continued

TEST	ACTION	APPLICABILITY
4	Turn the ignition off. Rotate the Panel Lamps Dimmer switch to the off position. Disconnect the Rear Blower Rear Control Switch C2 harness connector. Turn the Headlamp switch on. Measure the voltage of the Panel Lamps Driver circuit while rotating the Panel Lamps Dimmer switch from the off position to the full brightness position. Does the voltage change from approximately 2.5 volts to 11.5 volts? Yes → Go To 5 No → Go To 6	All
5	Turn the Headlamp switch off. Turn the ignition off. Disconnect the Rear Blower Rear Control Switch C2 harness connector. Measure the resistance of the Ground circuit between the Rear Blower Rear Control switch C2 harness connector and ground. Is the resistance below 5 ohms? Yes → Replace the Rear Blower Rear Control Switch in accordance with the Service Information. Perform BODY VERIFICATION TEST - VER 1. No → Repair the Ground circuit for an open. Perform BODY VERIFICATION TEST - VER 1.	All
6	Turn the ignition off. Disconnect the Rear Blower Rear Control Switch C2 harness connector. Disconnect the Body Control Module C3 harness connector. Measure the resistance of the Panel Lamps Driver circuit between the Rear Blower Rear Control Switch C2 harness connector and the Body Control Module C3 harness connector. Is the resistance below 5 ohms? Yes → Replace the Body Control Module in accordance with the Service Information. Perform BODY VERIFICATION TEST - VER 1. No → Repair the Panel Lamps Driver circuit for an open. Perform BODY VERIFICATION TEST - VER 1.	All

Symptom:

*REAR BLOWER MOTOR INOPERATIVE - MTC

POSSIBLE CAUSES
FRONT CONTROL MODULE (FCM) DTC(S) PRESENT
IPM FUSE #12
FUSED REAR BLOWER MOTOR RELAY OUTPUT CIRCUIT SHORTED TO GROUND
BLOWER MOTOR
GROUND CIRCUIT OPEN
A/C - HEATER CONTROL MODULE
CHECK FOR POWER TO REAR BLOWER MOTOR
BLOWER MOTOR
REAR BLOWER HIGH SPEED CIRCUIT OPEN
REAR BLOWER MOTOR HIGH CIRCUIT OPEN
REAR BLOWER MOTOR RESISTOR BLOCK
IPM - OPEN CIRCUIT
IPM - OPEN CIRCUIT
REAR BLOWER MOTOR RELAY
IPM - OPEN CIRCUIT
FUSED REAR BLOWER MOTOR RELAY OUTPUT CIRCUIT OPEN

TEST	ACTION	APPLICABILITY
1	With the DRBIII® in Front Control Module, read the active DTCs. Are any active FCM DTCs present? Yes → For FCM DTCs related to the blower relay circuits, refer to the Heating & A/C catagory. For all other FCM DTCs, refer to the symptom list in the related catagory. Perform BODY VERIFICATION TEST - VER 1. No → Go To 2	All
2	Turn the ignition off. Remove and inspect Intelligent Power Module (IPM) Fuse #12. Is the fuse open? Yes → Go To 3 No → Go To 5	All

*REAR BLOWER MOTOR INOPERATIVE - MTC — Continued

TEST	ACTION	APPLICABILITY
3	Replace IPM Fuse #12. Turn the ignition on. On RG vehicles, press the A/C - Heater Control power switch on. Turn the rear blower on and operate it in all speeds and modes. Does the blower motor operate properly without blowing the fuse? Yes → Check the Fused Rear Blower Motor Relay Output circuit for an intermittent short to ground. Repair as necessary. Perform BODY VERIFICATION TEST - VER 1. No → Go To 4	All
4	Turn the ignition off. Disconnect the Rear Blower Motor 2-pin harness connector. Measure the resistance between ground and the Fused Rear Blower Motor Relay Output circuit. Is the resistance below 10K ohms? Yes → Repair the Fused Rear Blower Motor Relay Output circuit for a short to ground. Replace IPM Fuse #12. Perform BODY VERIFICATION TEST - VER 1. No → Replace the Rear Blower Motor in accordance with the Service Information. Replace IPM Fuse #12 Perform BODY VERIFICATION TEST - VER 1.	All
5	Ensure IPM Fuse #12 is installed. Disconnect the Rear Blower Front Control Switch harness connector. Turn the ignition on. On RG vehicles, press the A/C - Heater Control power switch on. **NOTE: The test light must illuminate brightly. Compare the brightness to that of a direct connection to the battery.** Using a 12-volt test light connected to ground, back probe the Rear Blower Motor High circuit in the Rear Blower Front Control Switch harness connector. Does the test light illuminate brightly? Yes → Go To 6 No → Go To 7	All
6	Turn the ignition off. Disconnect the Rear Blower Front Control Switch harness connector. Measure the resistance of the Ground circuit between the Rear Blower Front Control Switch harness connector and ground. Is the resistance below 5.0 ohms? Yes → Replace the A/C - Heater Control Module in accordance with the Service Information. Perform BODY VERIFICATION TEST - VER 1. No → Repair the Ground circuit for an open. Perform BODY VERIFICATION TEST - VER 1.	All

*REAR BLOWER MOTOR INOPERATIVE - MTC — Continued

TEST	ACTION	APPLICABILITY
7	Turn the ignition on. On RG vehicles, press the A/C - Heater Control power switch on. **NOTE: The test light must illuminate brightly. Compare the brightness to that of a direct connection to the battery.** Using a 12-volt test light connected to ground, back probe the Fused Rear Blower Motor Relay Output circuit in the Rear Blower Motor 2-pin harness connector. Does the test light illuminate brightly? Yes → Go To 8 No → Go To 11	All
8	On RG vehicles, press the A/C - Heater Control power switch off. Turn the ignition off. Using a jumper wire connected to ground, back probe the DB/OR wire in the Rear Blower Motor 2-pin harness connector. Turn the ignition on. On RG vehicles, press the A/C - Heater Control power switch on. Does the blower motor run at high speed? Yes → Go To 9 No → Replace the Rear Blower Motor in accordance with the Service Information. Perform BODY VERIFICATION TEST - VER 1.	All
9	Turn the ignition off. Disconnect the Rear Blower Motor 2-pin harness connector. Disconnect the Rear Blower Motor Resistor Block harness connector. Measure the resistance of the DB/OR wire between the Rear Blower Motor 2-pin harness connector and the Rear Blower Motor Resistor Block harness connector. Is the resistance below 5 ohms? Yes → Go To 10 No → Repair the DB/OR wire between the Rear Blower Motor 2-pin harness connector and the Rear Blower Motor Resistor Block harness connector for an open. Perform BODY VERIFICATION TEST - VER 1.	All
10	Turn the ignition off. Disconnect the Rear Blower Motor Resistor Block harness connector. Disconnect the Rear Blower Front Control Switch harness connector. Measure the resistance of the Rear Blower Motor High circuit between the Rear Blower Motor Resistor Block harness connector and the Rear Blower Front Control Switch harness connector. Is the resistance below 5 ohms? Yes → Replace the Rear Blower Motor Resistor Block in accordance with the Service Information. Perform BODY VERIFICATION TEST - VER 1. No → Repair the Rear Blower Motor High circuit for an open. Perform BODY VERIFICATION TEST - VER 1.	All

*REAR BLOWER MOTOR INOPERATIVE - MTC — Continued

TEST	ACTION	APPLICABILITY
11	Turn the ignition off. Remove the Rear Blower Motor Relay from the IPM. **NOTE: The test light must illuminate brightly. Compare the brightness to that of a direct connection to the battery.** Using a 12-volt test light connected to ground, probe cavity 30 of the Rear Blower Motor Relay connector. Does the test light illuminate brightly? Yes → Go To 12 No → Replace the IPM in accordance with the Service Information. Perform BODY VERIFICATION TEST - VER 1.	All
12	Turn the ignition off. Remove the Rear Blower Motor Relay from the IPM. Remove IPM Fuse #12. Measure the resistance between cavity 87 of the Rear Blower Motor Relay connector and IPM Fuse #12 (power input cavity). Is the resistance below 5 ohms? Yes → Go To 13 No → Replace the IPM in accordance with the Service Information. Perform BODY VERIFICATION TEST - VER 1.	All
13	Turn the ignition off. Make sure that the Rear Blower Motor Relay is installed. Remove IPM Fuse #12. Turn the ignition on. **NOTE: The test light must illuminate brightly. Compare the brightness to that of a direct connection to the battery.** Using a 12-volt test light connected to ground, probe IPM Fuse #12 (power input cavity). Does the test light illuminate brightly? Yes → Go To 14 No → Replace the Rear Blower Motor Relay in accordance with the Service Information. Perform BODY VERIFICATION TEST - VER 1.	All
14	Turn the ignition off. Remove IPM Fuse #12. Disconnect the IPM C8 harness connector. Measure the resistance between IPM Fuse #12 (power output cavity) and cavity 7 of the IPM C8 connector (IPM side). Is the resistance below 5 ohms? Yes → Repair the Fused Rear Blower Motor Relay Output circuit for an open. Perform BODY VERIFICATION TEST - VER 1. No → Replace the IPM in accordance with the Service Information. Perform BODY VERIFICATION TEST - VER 1.	All

Symptom:

*REAR BLOWER MOTOR SPEEDS INCORRECT - MTC

POSSIBLE CAUSES
REAR BLOWER REAR CONTROL SWITCH
REAR BLOWER MOTOR DRIVER CIRCUIT(S) SHORTED TO GROUND
A/C - HEATER CONTROL MODULE
REAR BLOWER REAR CONTROL SWITCH
REAR BLOWER MOTOR DRIVER CIRCUIT(S) SHORTED TO VOLTAGE
REAR BLOWER MOTOR FRONT CONTROL FEED CIRCUIT SHORTED TO VOLTAGE
REAR BLOWER DRIVER CKT(S) SHORTED TO REAR BLOWER FRONT CONTROL FEED CKT
REAR BLOWER MOTOR DRIVER CIRCUITS SHORTED TOGETHER
A/C - HEATER CONTROL MODULE
REAR BLOWER MOTOR DRIVER CIRCUIT(S) OPEN
REAR BLOWER MOTOR RESISTOR BLOCK

TEST	ACTION	APPLICABILITY
1	Turn the Rear Blower Switch on the A/C - Heater Control Module off. Turn the ignition on. On RG vehicles, press the A/C - Heater Control power switch on. Does the rear blower run? Yes → Go To 2 No → Go To 4	All
2	Turn the Rear Blower switch on the A/C - Heater Control Module off. On RG vehicles, press the A/C - Heater Control power switch off. Turn the ignition off. Disconnect the Rear Blower Rear Control Switch C1 harness connector. Turn the ignition on. On RG vehicles, press the A/C - Heater Control power switch on. Does the rear blower run? Yes → Go To 3 No → Replace the Rear Blower Rear Control Switch in accordance with the Service Information. Perform BODY VERIFICATION TEST - VER 1.	All

*REAR BLOWER MOTOR SPEEDS INCORRECT - MTC — Continued

TEST	ACTION	APPLICABILITY
3	Turn the ignition off. Disconnect the Rear Blower Front Control Switch harness connector. Disconnect the Rear Blower Rear Control Switch C1 harness connector. Measure the resistance between ground and each of the Rear Blower Motor Driver circuits (Low, Medium, and High) in the Rear Blower Front Control Switch harness connector. Is the resistance below 10K ohms on any of the circuits? Yes → Repair all Rear Blower Motor Driver circuits with a resistance below 10K ohms for a short to ground. Perform BODY VERIFICATION TEST - VER 1. No → Replace the A/C - Heater Control Module in accordance with the Service Information. Perform BODY VERIFICATION TEST - VER 1.	All
4	Turn the Rear Blower switch on the A/C - Heater Control Module off. On RG vehicles, press the A/C - Heater Control power switch off. Turn the ignition off. Disconnect the Rear Blower Rear Control Switch C1 harness connector. Turn the ignition on. On RG vehicles, press the A/C - Heater Control power switch on. Turn the Rear Blower switch on the A/C - Heater Control Module to the Low, Medium, and High speed positions while listening for the rear blower motor to change speed accordingly. Does the rear blower speed change accordingly? Yes → Replace the Rear Blower Rear Control Switch in accordance with the Service Information. Perform BODY VERIFICATION TEST - VER 1. No → Go To 5	All
5	On RG vehicles, press the A/C - Heater Control power switch off. Turn the ignition off. Disconnect the Rear Blower Front Control Switch harness connector. Disconnect the Rear Blower Rear Control Switch C1 harness connector. Turn the ignition on. On RG vehicles, press the A/C - Heater Control power switch on. **NOTE: The test light must illuminate brightly. Compare the brightness to that of a direct connection to the battery.** Using a 12-volt test light connect to ground, back probe each of the Rear Blower Motor Driver circuits (Low, Medium, and High) in the Rear Blower Front Control Switch harness connector and in the Rear Blower Rear Control Switch C1 harness connector. Does the test light illuminate brightly on each circuit? Yes → Go To 6 No → Go To 10	All

*REAR BLOWER MOTOR SPEEDS INCORRECT - MTC — Continued

TEST	ACTION	APPLICABILITY
6	On RG vehicles, press the A/C - Heater Control power switch off. Turn the ignition off. Disconnect the Rear Blower Front Control Switch harness connector. Disconnect the Rear Blower Rear Control Switch C1 harness connector. Turn the ignition on Measure the voltage of each of the Rear Blower Motor Driver circuits (Low, Medium, and High). Is there voltage present on any of the circuits? Yes → Repair all Rear Blower Motor Driver circuits with voltage present for a short to voltage. Perform BODY VERIFICATION TEST - VER 1. No → Go To 7	All
7	On RG vehicles, press the A/C - Heater Control power switch off. Turn the ignition off. Disconnect the Rear Blower Front Control Switch harness connector. Disconnect the Rear Blower Rear Control Switch C1 harness connector. Turn the ignition on Measure the voltage of the Rear Blower Motor Front Control Feed circuit. Is there any voltage present? Yes → Repair the Rear Blower Motor Front Control Feed circuit for a short to voltage. Perform BODY VERIFICATION TEST - VER 1. No → Go To 8	All
8	Turn the ignition off. Disconnect the Rear Blower Front Control Switch harness connector. Disconnect the Rear Blower Rear Control Switch C1 harness connector. Measure the resistance between the Rear Blower Motor Front Control Feed circuit and each of the Rear Blower Motor Driver circuits (Low, Medium, and High). Is the resistance below 10K ohms on any of the circuits? Yes → Repair all Rear Blower Motor Driver circuits with a resistance below 10K ohms for a short to the Rear Blower Motor Front Control Feed circuit. Perform BODY VERIFICATION TEST - VER 1. No → Go To 9	All
9	Turn the ignition off. Disconnect the Rear Blower Front Control Switch harness connector. Disconnect the Rear Blower Rear Control Switch C1 harness connector. Disconnect the Rear Blower Motor Resistor Block harness connector. Measure the resistance between the Rear Blower Motor Low circuit and the Rear Blower Motor Medium and High circuits. Measure the resistance between the Rear Blower Motor Medium circuit and the Rear Blower Motor High circuit. Is the resistance below 10K ohms between any of the circuits? Yes → Repair the shorted Rear Blower Motor Driver circuits. Perform BODY VERIFICATION TEST - VER 1. No → Replace the A/C - Heater Control Module in accordance with the Service Information. Perform BODY VERIFICATION TEST - VER 1.	All

*REAR BLOWER MOTOR SPEEDS INCORRECT - MTC — Continued

TEST	ACTION	APPLICABILITY
10	Turn the ignition off. Disconnect the Rear Blower Front Control Switch harness connector. Disconnect the Rear Blower Rear Control Switch C1 harness connector. Disconnect the Rear Blower Motor Resistor Block harness connector. Measure the resistance of each of the Rear Blower Motor Driver circuits (Low, Medium, and High) between the Rear Blower Motor Resistor Block harness connector and the Rear Blower Motor Front Control Switch harness connector. Measure the resistance of each of the Rear Blower Motor Driver circuits (Low, Medium, and High) between the Rear Blower Motor Resistor Block harness connector and the Rear Blower Rear Control Switch C1 harness connector. Is the resistance below 5.0 ohms on each of the circuits? Yes → Replace the Rear Blower Motor Resistor Block in accordance with the Service Information. Perform BODY VERIFICATION TEST - VER 1. No → Repair all Rear Blower Motor Driver circuit(s) with a resistance above 5 ohms for an open. Perform BODY VERIFICATION TEST - VER 1.	All

Symptom:

***REAR BLOWER REAR CONTROL SWITCH INOP IN ONE OR MORE SPEEDS - MTC**

POSSIBLE CAUSES
REAR BLOWER MOTOR DRIVER CIRCUIT(S) OPEN
REAR BLOWER REAR CONTROL SWITCH
REAR BLOWER MOTOR FRONT CONTROL FEED CIRCUIT OPEN
A/C - HEATER CONTROL MODULE

TEST	ACTION	APPLICABILITY
1	Turn the ignition off. Disconnect the Rear Blower Rear Control Switch C1 harness connector. Turn the ignition on. On RG vehicles, press the A/C - Heater Control power switch on. **NOTE: The test light must illuminate brightly. Compare the brightness to that of a direct connection to the battery.** Using a 12-volt test light connected to ground, back probe each of the Rear Blower Motor Driver circuits (Low, Medium, and High). Does the test light illuminate brightly on each circuit? Yes → Go To 2 No → Repair all Rear Blower Motor Driver circuits that failed to illuminate the test light brightly for an open. Perform BODY VERIFICATION TEST - VER 1.	All
2	On RG vehicles, press the A/C - Heater Control power switch off. Turn the ignition off. Make sure that the Rear Blower Rear Control C1 harness connector is connected to the Rear Blower Rear Control Switch. Using a jumper wire connected to ground, back probe the Rear Blower Motor Front Control Feed circuit in the Rear Blower Rear Control Switch C1 harness connector. Turn the ignition on. On RG vehicles, press the A/C - Heater Control power switch on. Turn the Blower switch on the Rear Blower Rear Control Switch to each speed position. Does the rear blower run in all speeds? Yes → Go To 3 No → Replace the Rear Blower Rear Control Switch in accordance with the Service Information. Perform BODY VERIFICATION TEST - VER 1.	All

*REAR BLOWER REAR CONTROL SWITCH INOP IN ONE OR MORE SPEEDS - MTC — Continued

TEST	ACTION	APPLICABILITY
3	Turn the ignition off. Disconnect the Rear Blower Front Control Switch harness connector. Disconnect the Rear Blower Rear Control Switch C1 harness connector. Measure the resistance of the Rear Blower Motor Front Control Feed circuit between the Rear Blower Front Control Switch harness connector and the Rear Blower Rear Control Switch C1 harness connector. Is the resistance below 5.0 ohms? Yes → Replace the A/C - Heater Control Module in accordance with the Service Information. Perform BODY VERIFICATION TEST - VER 1. No → Repair the Rear Blower Motor Front Control Feed circuit for an open. Perform BODY VERIFICATION TEST - VER 1.	All

Symptom:

ACCESSORY POWER OUTPUT 1 OPEN

When Monitored and Set Condition:

ACCESSORY POWER OUTPUT 1 OPEN

When Monitored: Continuously with the ignition on.

Set Condition: The FCM has detected an open in the Accessory Relay control circuit.

POSSIBLE CAUSES
FRONT CONTROL MODULE
FUSE & RELAY CENTER INTERNAL MALFUNCTION
ACCESSORY RELAY
FRONT CONTROL MODULE
INTERMITTENT CONDITION

TEST	ACTION	APPLICABILITY
1	Turn the ignition on. With the DRBIII®, erase the current Front Control Module DTC's. Turn the ignition off, wait 10 seconds then turn the ignition on. With the DRBIII®, read the current Front Control Module DTC's. Does the DRBIII® display both the ACCESSORY POWER OUTPUT OPEN trouble codes? Yes → Go To 2 No → Go To 3	All
2	Turn the ignition off. Disconnect the Accessory Relay from the Fuse & Relay Center. Connect a known good relay to the Accessory Relay location in the Fuse & Relay Center. Turn the ignition on. With the DRBIII®, erase the current Front Control Module DTC's. Turn the ignition off, wait 10 seconds then turn the ignition on. With the DRBIII®, read the current Front Control Module DTC's. Does the DRBIII® display both the ACCESSORY POWER OUTPUT OPEN trouble codes? Yes → Replace the Fuse and Relay Center. Perform BODY VERIFICATION TEST - VER 1. No → Replace the original Accessory Relay. Perform BODY VERIFICATION TEST - VER 1.	All

ACCESSORY POWER OUTPUT 1 OPEN — Continued

TEST	ACTION	APPLICABILITY
3	Turn the ignition on. With the DRBIII®, read the current Front Control Module DTC's. Does the DRBIII® display the ACCESSORY POWER OUTPUT 1 OPEN trouble code? Yes → Replace the Front Control Module. Perform BODY VERIFICATION TEST - VER 1. No → Go To 4	All
4	Turn the ignition on. With the DRBIII®, read the current Front Control Module DTC's. Does the DRBIII® display the ACCESSORY POWER OUTPUT #2 OPEN trouble code? Yes → Replace the Front Control Module. Perform BODY VERIFICATION TEST - VER 1. No → This symptom represents an internal malfunction in the Front Control Module. The condition that caused this symptom is currently not present. Perform BODY VERIFICATION TEST - VER 1.	All

Symptom:

ACCESSORY POWER OUTPUT 1 SHORT TO B+

When Monitored and Set Condition:

ACCESSORY POWER OUTPUT 1 SHORT TO B+

When Monitored: Continuously with the ignition on.

Set Condition: The FCM has detected a short to battery voltage in the Accessory Relay control circuit.

POSSIBLE CAUSES
FRONT CONTROL MODULE
FUSE & RELAY CENTER INTERNAL MALFUNCTION
ACCESSORY RELAY
FRONT CONTROL MODULE
INTERMITTENT CONDITION

TEST	ACTION	APPLICABILITY
1	Turn the ignition on. With the DRBIII®, erase the current Front Control Module DTC's. Turn the ignition off, wait 10 seconds then turn the ignition on. With the DRBIII®, read the current Front Control Module DTC's. Does the DRBIII® display both ACCESSORY POWER OUTPUT SHORTED TO BATTERY trouble codes? Yes → Go To 2 No → Go To 3	All
2	Turn the ignition off. Disconnect the Accessory Relay from the Fuse & Relay Center. Connect a known good relay to the Accessory Relay location in the Fuse & Relay Center. Turn the ignition on. With the DRBIII®, erase the current Front Control Module DTC's. Turn the ignition off, wait 10 seconds then turn the ignition on. With the DRBIII®, read the current Front Control Module DTC's. Does the DRBIII® display both ACCESSORY POWER OUTPUT SHORTED TO BATTERY trouble codes? Yes → Replace the Fuse and Relay Center. Perform BODY VERIFICATION TEST - VER 1. No → Replace the original Accessory Relay. Perform BODY VERIFICATION TEST - VER 1.	All

ACCESSORY POWER OUTPUT 1 SHORT TO B+ — Continued

TEST	ACTION	APPLICABILITY
3	Turn the ignition on. With the DRBIII®, read the current Front Control Module DTC's. Does the DRBIII® display the ACCESSORY POWER OUTPUT #1 SHORTED TO BATTERY trouble code? Yes → Replace the Front Control Module. Perform BODY VERIFICATION TEST - VER 1. No → Go To 4	All
4	Turn the ignition on. With the DRBIII®, read the current Front Control Module DTC's. Does the DRBIII® display the ACCESSORY POWER OUTPUT #2 OPEN trouble code? Yes → Replace the Front Control Module. Perform BODY VERIFICATION TEST - VER 1. No → This symptom represents an internal malfunction in the Front Control Module. The condition that caused this symptom is currently not present. Perform BODY VERIFICATION TEST - VER 1.	All

Symptom:

ACCESSORY POWER OUTPUT 2 OPEN

When Monitored and Set Condition:

ACCESSORY POWER OUTPUT 2 OPEN

When Monitored: Continuously with the ignition on.

Set Condition: The FCM has detected an open in the Accessory Relay control circuit

POSSIBLE CAUSES
FRONT CONTROL MODULE
FUSE & RELAY CENTER INTERNAL MALFUNCTION
ACCESSORY RELAY
FCM
INTERMITTENT CONDITION

TEST	ACTION	APPLICABILITY
1	Turn the ignition on. With the DRBIII®, erase the current Front Control Module DTC's. Turn the ignition off, wait 10 seconds then turn the ignition on. With the DRBIII®, read the current Front Control Module DTC's. Does the DRBIII® display both ACCESSORY POWER OUTPUT OPEN trouble codes? Yes → Go To 2 No → Go To 3	All
2	Turn the ignition off. Disconnect the Accessory Relay from the Fuse & Relay Center. Connect a known good relay to the Accessory Relay location in the Fuse & Relay Center. Turn the ignition on. With the DRBIII®, erase the current Front Control Module DTC's. Turn the ignition off, wait 10 seconds then turn the ignition on. With the DRBIII®, read the current Front Control Module DTC's. Does the DRBIII® display both ACCESSORY POWER OUTPUT OPEN trouble codes? Yes → Replace the Fuse and Relay Center. Perform BODY VERIFICATION TEST - VER 1. No → Replace the Accessory Relay. Perform BODY VERIFICATION TEST - VER 1.	All

ACCESSORY POWER OUTPUT 2 OPEN — Continued

TEST	ACTION	APPLICABILITY
3	Turn the ignition on. With the DRBIII®, read the current Front Control Module DTC's. Does the DRBIII® display the ACCESSORY POWER OUTPUT #1 OPEN trouble code? Yes → Replace the Front Control Module. Perform BODY VERIFICATION TEST - VER 1. No → Go To 4	All
4	Turn the ignition on. With the DRBIII®, read the current Front Control Module DTC's. Does the DRBIII® display the ACCESSORY POWER OUTPUT #2 OPEN trouble code? Yes → Replace the Front Control Module. Perform BODY VERIFICATION TEST - VER 1. No → This symptom represents an internal malfunction in the Front Control Module. The condition that caused this symptom is currently not present. Perform BODY VERIFICATION TEST - VER 1.	All

Symptom:

ACCESSORY POWER OUTPUT 2 SHORT TO B+

When Monitored and Set Condition:

ACCESSORY POWER OUTPUT 2 SHORT TO B+

When Monitored: Continuously with the ignition on.

Set Condition: The FCM has detected a short to battery voltage in the Accessory Relay control circuit.

POSSIBLE CAUSES
FRONT CONTROL MODULE
FUSE & RELAY CENTER INTERNAL MALFUNCTION
ACCESSORY RELAY
FRONT CONTROL MODULE
INTERMITTENT CONDITION

TEST	ACTION	APPLICABILITY
1	Turn the ignition on. With the DRBIII®, erase the current Front Control Module DTC's. Turn the ignition off, wait 10 seconds then turn the ignition on. With the DRBIII®, read the current Front Control Module DTC's. Does the DRBIII® display both ACCESSORY POWER OUTPUT SHORTED TO BATTERY trouble codes? Yes → Go To 2 No → Go To 3	All
2	Turn the ignition off. Disconnect the Accessory Relay from the Fuse & Relay Center. Connect a known good relay to the Accessory Relay location in the Fuse & Relay Center. Turn the ignition on. With the DRBIII®, erase the current Front Control Module DTC's. Turn the ignition off, wait 10 seconds then turn the ignition on. With the DRBIII®, read the current Front Control Module DTC's. Does the DRBIII® display both ACCESSORY POWER OUTPUT SHORTED TO BATTERY trouble codes? Yes → Replace the Fuse and Relay Center. Perform BODY VERIFICATION TEST - VER 1. No → Replace the original Accessory Relay. Perform BODY VERIFICATION TEST - VER 1.	All

ACCESSORY POWER OUTPUT 2 SHORT TO B+ — Continued

TEST	ACTION	APPLICABILITY
3	Turn the ignition on. With the DRBIII®, read the current Front Control Module DTC's. Does the DRBIII® display the ACCESSORY POWER OUTPUT #1 SHORTED TO BATTERY trouble code? Yes → Replace the Front Control Module. Perform BODY VERIFICATION TEST - VER 1. No → Go To 4	All
4	Turn the ignition on. With the DRBIII®, read the current Front Control Module DTC's. Does the DRBIII® display the ACCESSORY POWER OUTPUT #2 SHORTED TO BATTERY trouble code? Yes → Replace the Front Control Module. Perform BODY VERIFICATION TEST - VER 1. No → This symptom represents an internal malfunction in the Front Control Module. The condition that caused this symptom is currently not present. Perform BODY VERIFICATION TEST - VER 1.	All

Symptom:

APM RELAY OUTPUT 1 OPEN - FCM

When Monitored and Set Condition:

APM RELAY OUTPUT 1 OPEN - FCM

When Monitored: Continuously.

Set Condition: If the FCM detects no voltage present on the Adjustable Pedals Relay Control circuit.

POSSIBLE CAUSES
CHECK DTCS
FUSED B+ CIRCUIT OPEN
ADJUSTABLE PEDALS RELAY OPEN
ADJUSTABLE PEDALS RELAY CONTROL CIRCUIT OPEN
FRONT CONTROL MODULE

TEST	ACTION	APPLICABILITY
1	Turn the ignition on. With the DRB, read the FCM DTC's. Is the APM RELAY OUTPUT 1 OPEN DTC set? Yes → Go To 2 No → The condition is not present at this time. Monitor DRBIII® parameters while wiggling the related wiring harness. Refer to any Technical Service Bulletins (TSB) that may apply. Visually inspect the related wiring harness and connector terminals. Perform ADJUSTABLE PEDALS VERIFICATION TEST - VER 1.	All
2	Remove the Adjustable Pedals Relay. Using a 12-volt test light connected to ground, probe cavity 4 of the Adjustable Pedals Relay connector. Is the test light illuminated? Yes → Go To 3 No → Check IPM Fuse #18 for an open. If OK, repair the Fused B+ circuit for an open. Perform ADJUSTABLE PEDALS VERIFICATION TEST - VER 1.	All

APM RELAY OUTPUT 1 OPEN - FCM — Continued

TEST	ACTION	APPLICABILITY
3	Turn the ignition off. Install a substitute relay in place of the Adjustable Pedals Relay. Turn the ignition on. With the DRB, erase DTCs. With the DRB, read DTCs. Did the DTC reset? Yes → Go To 4 No → Replace the original Adjustable Pedals Relay. Perform ADJUSTABLE PEDALS VERIFICATION TEST - VER 1.	All
4	Turn the ignition off. Remove the Front Control Module from the IPM. Remove the Adjustable Pedals Relay. Measure the resistance of the Adjustable Pedals Relay Control circuit between the FCM connector cavity 12 and the Adjustable Pedals Relay connector cavity 6. Is the resistance below 5.0 ohms? Yes → Replace the Front Control Module in accordance with the Service Information. Perform ADJUSTABLE PEDALS VERIFICATION TEST - VER 1. No → Repair the Adjustable Pedals Relay Control circuit for an open. Perform ADJUSTABLE PEDALS VERIFICATION TEST - VER 1.	All

Symptom:

APM RELAY OUTPUT 1 SHORT TO BATT - FCM

When Monitored and Set Condition:

APM RELAY OUTPUT 1 SHORT TO BATT - FCM

When Monitored: Continuously.

Set Condition: The FCM detects excessive current when attempting to close the Adjustable Pedals Relay.

POSSIBLE CAUSES
CHECK DTCS
ADJUSTABLE PEDALS RELAY SHORTED
ADJUSTABLE PEDALS RELAY CONTROL CIRCUIT SHORTED TO BATTERY
FRONT CONTROL MODULE

TEST	ACTION	APPLICABILITY
1	Turn the ignition on. With the DRB, read the FCM DTC's. Is the APM RELAY OUTPUT 1 SHORT TO BATT DTC set? Yes → Go To 2 No → The condition is not present at this time. Monitor DRBIII® parameters while wiggling the related wiring harness. Refer to any Technical Service Bulletins (TSB) that may apply. Visually inspect the related wiring harness and connector terminals. Perform ADJUSTABLE PEDALS VERIFICATION TEST - VER 1.	All
2	Turn the ignition off. Install a substitute relay in place of the Adjustable Pedals Relay. Turn the ignition on. With the DRB, erase DTCs. With the DRB, read DTCs. Did the DTC reset? Yes → Go To 3 No → Replace the original Adjustable Pedals Relay. Perform ADJUSTABLE PEDALS VERIFICATION TEST - VER 1.	All

APM RELAY OUTPUT 1 SHORT TO BATT - FCM — Continued

TEST	ACTION	APPLICABILITY
3	Turn the ignition off. Remove the Front Control Module from the IPM. Remove the Adjustable Pedals Relay. Turn the ignition on. Using a 12-volt test light connected to ground, probe the Adjustable Pedals Relay connector cavity 6. Is the test light illuminated? Yes → Repair the Adjustable Pedals Relay Control circuit for a short to voltage. Perform ADJUSTABLE PEDALS VERIFICATION TEST - VER 1. No → Replace the Front Control Module in accordance with the Service Information. Perform ADJUSTABLE PEDALS VERIFICATION TEST - VER 1.	All

Symptom:

BRAKE SHIFT INTERLOCK OUTPUT OPEN - FCM

When Monitored and Set Condition:

BRAKE SHIFT INTERLOCK OUTPUT OPEN - FCM

When Monitored: With the ignition in the Unlock/Run/Start position.

Set Condition: The Brake Shift Interlock output off, no output fault of Unlock/Run/Start or BTSI output, but the Unlock/Run/Start or BTSI feedback voltage cannot be detected by the FCM.

POSSIBLE CAUSES
BTSI SOLENOID
BTSI SOLENOID CONTROL CIRCUIT OPEN
FCM OUTPUT (UNLOCK/RUN/START) CIRCUIT OPEN
IPM

TEST	ACTION	APPLICABILITY
1	Turn the ignition on. Disconnect the BTSI Solenoid harness connector. While applying the brake, Use a 12-volt test light to check for voltage at the BTSI Solenoid harness connector between the BTSI Solenoid control circuit and the FCM Output (Unlock/Run/Start) circuit. Does the test light illuminate brightly? Yes → Replace the BTSI Solenoid in accordance with the Service Information. Perform BODY VERIFICATION TEST - VER 1. No → Go To 2	All
2	Turn the ignition off. Disconnect the BTSI Solenoid harness connector. Disconnect the IPM C7 harness connector. Measure the resistance of the BTSI Solenoid Control circuit between the BTSI Solenoid connector and the FCM C7 connector. Is the resistance above 5.0 ohms? Yes → Repair the BTSI Solenoid Control circuit for an open. Perform BODY VERIFICATION TEST - VER 1. No → Go To 3	All

BRAKE SHIFT INTERLOCK OUTPUT OPEN - FCM — Continued

TEST	ACTION	APPLICABILITY
3	Turn the ignition off. Disconnect the BTSI Solenoid harness connector. Disconnect the IPM C7 harness connector. Measure the resistance of the FCM Output (Unlock/Run/Start) circuit between the BTSI Solenoid connector and the FCM C7 connector. Is the resistance above 5.0 ohms? Yes → Repair the FCM Output (Unlock/Run/Start) circuit for an open. Perform BODY VERIFICATION TEST - VER 1. No → Test Complete.	All

Symptom:

CPA NOT ENGAGED

When Monitored and Set Condition:

CPA NOT ENGAGED

When Monitored: Continuously with the ignition on.

Set Condition: If the connector positive assurance lock is not fully engaged, the Front Control Module will detect battery voltage on the B(+) sense circuit. With voltage present, the FCM determines that there is a poor connection at connector C5 of the Fuse and Relay Center.

POSSIBLE CAUSES
FRONT CONTROL MODULE INTERNAL MALFUNCTION
FUSE AND RELAY CENTER INTERNAL MALFUNCTION
INTERMITTENT CONDITION
CONNECTOR POSITIVE ASSURANCE LOCK

TEST	ACTION	APPLICABILITY
1	Turn the ignition on. With the DRBIII®, erase the current Front Control Module DTC's. Turn the ignition off, wait 10 seconds then turn the ignition on. With the DRBIII®, read the current Front Control Module DTC's. Does the DRBIII® display: CPA NOT ENGAGED? Yes → Go To 2 No → The condition that caused this symptom is currently not present. Inspect the related wiring harness for a possible intermittent condition. Perform BODY VERIFICATION TEST - VER 1.	All
2	Turn the ignition off. Disconnect the Front Control Module from the Fuse and Relay Center. Measure the voltage of the B(+) Sense circuit at the Fuse and Relay Center side of the FCM connector. Is the voltage above 10.0 volts? Yes → Go To 3 No → Replace the Front Control Module. Perform BODY VERIFICATION TEST - VER 1.	All

CPA NOT ENGAGED — Continued

TEST	ACTION	APPLICABILITY
3	Turn the ignition off. Inspect connector C5 on the Fuse and Relay Center, ensure the connector lock is properly seated into the connector. Measure the voltage of the B(+) Sense circuit at the Fuse and Relay Center side of the FCM connector. Is the voltage above 10.0 volts? Yes → Replace the Fuse and Relay Center. Perform BODY VERIFICATION TEST - VER 1. No → Verify the Connector Positive Assurance lock is correctly seated. Perform BODY VERIFICATION TEST - VER 1.	All

Symptom:
HORN INPUT STUCK

When Monitored and Set Condition:

HORN INPUT STUCK

When Monitored: Continuously with the ignition on.

Set Condition: The FCM has detected a fault in the Horn Switch Sense circuit.

POSSIBLE CAUSES
FRONT CONTROL MODULE INTERNAL MALFUNCTION
HORN SWITCH SENSE CIRCUIT SHORT TO GROUND
INTERMITTENT CONDITION
FUSE AND RELAY CENTER INTERNAL MALFUNCTION

TEST	ACTION	APPLICABILITY
1	Turn the ignition on. With the DRBIII®, erase the current Front Control Module DTC's. Turn the ignition off, wait 10 seconds then turn the ignition on. With the DRBIII®, read the current Front Control Module DTC's. Does the DRBIII® display: HORN INPUT STUCK? Yes → Go To 2 No → The condition that caused this symptom is currently not present. Inspect the related wiring harness for a possible intermittent condition. Perform BODY VERIFICATION TEST - VER 1.	All
2	Turn the ignition off. Disconnect connector C7 on the Fuse and Relay Center. Measure the resistance between ground and the Horn Switch Sense circuit at the Fuse and Relay Center C7 connector. Is the resistance below 5.0 ohms? Yes → Repair the Horn Switch Sense circuit for a short to ground. Perform BODY VERIFICATION TEST - VER 1. No → Go To 3	All
3	Turn the ignition off. Disconnect the Front Control Module from the Fuse and Relay Center. Measure the resistance between ground and the Horn Switch Sense circuit at the Fuse and Relay Center side of the FCM connector. Is the resistance below 5.0 ohms? Yes → Replace the Fuse and Relay Center. Perform BODY VERIFICATION TEST - VER 1. No → Replace the Front Control Module. Perform BODY VERIFICATION TEST - VER 1.	All

Symptom:
HORN RELAY OPEN

When Monitored and Set Condition:

HORN RELAY OPEN

When Monitored: Continuously with the ignition on.

Set Condition: The FCM has detected an open in the Horn Relay Control circuit.

POSSIBLE CAUSES
FUSE AND RELAY CENTER INTERNAL MALFUNCTION
HORN RELAY
INTERMITTENT CONDITION
FRONT CONTROL MODULE

TEST	ACTION	APPLICABILITY
1	Turn the ignition on. With the DRBIII®, erase the current Front Control Module DTC's. Turn the ignition off, wait 10 seconds then turn the ignition on. With the DRBIII®, read the current Front Control Module DTC's. Does the DRBIII® display: HORN RELAY OPEN? Yes → Go To 2 No → The condition that caused this symptom is currently not present. Inspect the related wiring harness for a possible intermittent condition. Perform BODY VERIFICATION TEST - VER 1.	All
2	Turn the ignition off. Remove the Horn Relay from the Fuse and Relay Center. Substitute the original Horn Relay with a known good relay. Turn the ignition on. With the DRBIII®, erase the current Front Control Module DTCs. Turn the engine off, wait 10 seconds then turn the ignition on. Attempt to operate the horn. With the DRBIII®, read the current Front Control Module DTC's. Does the DRBIII® display: HORN RELAY OPEN? Yes → Go To 3 No → Replace the Horn Relay. Perform BODY VERIFICATION TEST - VER 1.	All

HORN RELAY OPEN — Continued

TEST	ACTION	APPLICABILITY
3	Turn the ignition off. Remove the Horn Relay from the Fuse and Relay Center. Disconnect the Front Control Module from the Fuse and Relay Center. Measure the resistance of the Horn Relay Control circuit between the FCM connector cavity 10 and the Horn Relay connector cavity 85. Is the resistance below 5.0 ohms? Yes → Replace the Front Control Module. Perform BODY VERIFICATION TEST - VER 1. No → Replace the Fuse and Relay Center. Perform BODY VERIFICATION TEST - VER 1.	All

Symptom:

HORN RELAY SHORTED TO B+

When Monitored and Set Condition:

HORN RELAY SHORTED TO B+

When Monitored: Continuously with the ignition on.

Set Condition: The FCM has detected a short to battery in the Horn Relay Control circuit.

POSSIBLE CAUSES
FUSE AND RELAY CENTER INTERNAL MALFUNCTION
HORN RELAY
INTERMITTENT CONDITION
FRONT CONTROL MODULE

TEST	ACTION	APPLICABILITY
1	Turn the ignition on. With the DRBIII®, erase the current Front Control Module DTC's. Turn the ignition off, wait 10 seconds then turn the ignition on. With the DRBIII®, read the current Front Control Module DTC's. Does the DRBIII® display: HORN RELAY SHORTED TO BATTERY? Yes → Go To 2 No → The condition that caused this symptom is currently not present. Inspect the related wiring harness for a possible intermittent condition. Perform BODY VERIFICATION TEST - VER 1.	All
2	Turn the ignition off. Remove the Horn Relay from the Fuse and Relay Center. Substitute the original Horn Relay with a known good relay. Turn the ignition on. With the DRBIII®, erase the current Front Control Module DTCs. Turn the ignition off, wait 10 seconds, then turn the ignition on. Attempt to operate the horn. With the DRBIII®, read the current Front Control Module DTC's. Does the DRBIII® display: HORN RELAY SHORTED TO BATTERY? Yes → Go To 3 No → Replace the Horn Relay. Perform BODY VERIFICATION TEST - VER 1.	All

HORN RELAY SHORTED TO B+ — Continued

TEST	ACTION	APPLICABILITY
3	Turn the ignition off. Disconnect the Front Control Module from the Fuse and Relay Center. Disconnect the Horn Relay from the Fuse and Relay Center. Measure the voltage of the Horn Relay Control circuit at the Fuse and Relay Center side of the FCM connector. Is the voltage above 10.0 volts? Yes → Replace the Fuse and Relay Center. Perform BODY VERIFICATION TEST - VER 1. No → Replace the Front Control Module. Perform BODY VERIFICATION TEST - VER 1.	All

Symptom:

IGN. UNLOCK R-S OUTPUT OPEN

When Monitored and Set Condition:

IGN. UNLOCK R-S OUTPUT OPEN

When Monitored: Ignition on.

Set Condition: When the output off, there is an open condition detected for more than 10 seconds.

POSSIBLE CAUSES
TEST FOR CURRENT DTC'S
IPM INTERNALLY OPEN
(F2) FCM OUTPUT (UNLOCK-RUN-START) CIRCUIT OPEN
(F1) FCM OUTPUT (UNLOCK-RUN-START) CIRCUIT OPEN
FCM

TEST	ACTION	APPLICABILITY
1	With the DRBIII®, record and erase the current Front Control Module DTC's. Cycle the ignition from ON to OFF. Start the vehicle and observe the DRBIII®. With the DRBIII®, read DTC's. Does the DRBIII® display: Ign. UNLOCK RUN-START Output Open? Yes → Go To 2 No → The condition that caused this DTC is currently not present. Use the wiring diagram/schematic as a guide, and inspect the related wiring harness for a possible intermittent condition. Perform BODY VERIFICATION TEST - VER 1.	All
2	Turn the ignition off. Disconnect the FCM from the IPM. Disconnect the C3 and C7 IPM harness connectors. Measure the resistance of the (F1, F2) FCM Output (UNLOCK-RUN-START) circuit, through the IPM, between the FCM/IPM harness connector and the IPM C3 and C7 harness connections. Is the resistance below 5.0 ohms for each measurement? Yes → Go To 3 No → Replace the IPM per Service Information. Perform BODY VERIFICATION TEST - VER 1.	All

IGN. UNLOCK R-S OUTPUT OPEN — Continued

TEST	ACTION	APPLICABILITY
3	**NOTE: If this vehicle is equipped with a Manual Transaxle answer YES to the test and continue.** Disconnect the Brake Trans Shift Interlock harness connector. Measure the resistance of the (F2) FCM Output (Unlock-Run-Start) circuit from the IPM C7 harness connector the Brake Trans Shift Interlock harness connector. Is the resistance below 5.0 ohms? Yes → Go To 4 No → Repair the open in the (F2) FCM Output (Unlock-Run-Start) circuit. Perform BODY VERIFICATION TEST - VER 1.	All
4	Disconnect the PCM C1 harness connector. **CAUTION: DO NOT PROBE THE PCM HARNESS CONNECTORS. PROBING THE PCM HARNESS CONNECTORS WILL DAMAGE THE PCM TERMINALS RESULTING IN POOR TERMINAL TO PIN CONNECTION. INSTALL MILLER SPECIAL TOOL #8815 TO PERFORM DIAGNOSIS.** Measure the resistance of the (F1) FCM Output (Unlock-Run-Start) circuit from the IPM C3 harness connector the appropriate terminal of special tool #8815 in place of the PCM C1 harness connector. Is the resistance below 5.0 ohms? Yes → Replace the FCM per Service Information. Perform BODY VERIFICATION TEST - VER 1. No → Repair the open in the (F1) FCM Output (Unlock-Run-Start) circuit. Perform BODY VERIFICATION TEST - VER 1.	All

Symptom:

IGN. UNLOCK R-S OUTPUT OVER CURRENT

When Monitored and Set Condition:

IGN. UNLOCK R-S OUTPUT OVER CURRENT

When Monitored: Ignition on.

Set Condition: When the output is active and there is a over current fault conditon present for more than 1 second.

POSSIBLE CAUSES
TEST FOR CURRENT DTC'S
EXCESSIVE RESISTANCE IN THE IPM
(F2) FCM OUTPUT (UNLOCK-RUN-START) CIRCUIT EXCESSIVE RESISTANCE
(F1) FCM OUTPUT (UNLOCK-RUN-START) CIRCUIT EXCESSIVE RESISTANCE
BRAKE TRANS SHIFT INTERLOCK
FCM

TEST	ACTION	APPLICABILITY
1	With the DRBIII®, record and erase the current Front Control Module DTC's. Cycle the ignition from ON to OFF. Start the vehicle and observe the DRBIII®. With the DRBIII®, read DTC's. Does the DRBIII® display: Ign. UNLOCK RUN-START Output Over Current? Yes → Go To 2 No → The condition that caused this DTC is currently not present. Use the wiring diagram/schematic as a guide, and inspect the related wiring harness for a possible intermittent condition. Perform BODY VERIFICATION TEST - VER 1.	All
2	Turn the ignition off. Disconnect the FCM from the IPM. Disconnect the C3 and C7 IPM harness connectors. Check connectors - Clean/repair as necessary. Measure the resistance of the (F1, F2) FCM Output (UNLOCK-RUN-START) circuit, through the IPM, between the FCM/IPM harness connector and the IPM C3 and C7 harness connections. Is the resistance below 5.0 ohms? Yes → Go To 3 No → Replace the IPM per Service Information. Perform BODY VERIFICATION TEST - VER 1.	All

IGN. UNLOCK R-S OUTPUT OVER CURRENT — Continued

TEST	ACTION	APPLICABILITY
3	**NOTE: If this vehicle is equipped with a Manual Transaxle answer YES to the test and continue.** Disconnect the Brake Trans Shift Interlock harness connector. Measure the resistance of the (F2) FCM Output (Unlock-Run-Start) circuit from the IPM C7 harness connector the Brake Trans Shift Interlock harness connector. Is the resistance below 5.0 ohms? Yes → Go To 4 No → Repair the excessive resistance in the (F2) FCM Output (Unlock-Run-Start) circuit. Perform BODY VERIFICATION TEST - VER 1.	All
4	Disconnect the PCM C1 harness connector. **CAUTION: DO NOT PROBE THE PCM HARNESS CONNECTORS. PROBING THE PCM HARNESS CONNECTORS WILL DAMAGE THE PCM TERMINALS RESULTING IN POOR TERMINAL TO PIN CONNECTION. INSTALL MILLER SPECIAL TOOL #8815 TO PERFORM DIAGNOSIS.** Measure the resistance of the (F1) FCM Output (Unlock-Run-Start) circuit from the IPM C3 harness connector to the appropriate terminal of special tool #8815 in place of the PCM C1 harness connector. Is the resistance below 5.0 ohms? Yes → Go To 5 No → Repair the excessive resistance in the (F1) FCM Output (Unlock-Run-Start) circuit. Perform BODY VERIFICATION TEST - VER 1.	All
5	**NOTE: If the vehicle is equipped with a Manual Transaxle answer NO to this test and continue.** Connect all the previously disconnected harness connectors and install the FCM. Turn the ignition on. Using a voltmeter, perform a voltage drop test across the Brake Trans Shift Interlock between terminals 1 and 2 while pressing the Brake Pedal. Is the voltage reading greater the 0.2 of a volt? Yes → Replace the Brake Trans Shift Interlock Solenoid per Service Information. Perform BODY VERIFICATION TEST - VER 1. No → Replace the FCM per Service Information. Perform BODY VERIFICATION TEST - VER 1.	All

Symptom:

IGN. UNLOCK-R-S OUTPUT OVER VOLT

When Monitored and Set Condition:

IGN. UNLOCK-R-S OUTPUT OVER VOLT

When Monitored: Ignition on.

Set Condition: Battery voltage above 30 volts for more than 1 second.

POSSIBLE CAUSES
TEST FOR CURRENT DTC'S
PCM CHARGING DTC PRESENT
FCM

TEST	ACTION	APPLICABILITY
1	With the DRBIII®, record and erase the current Front Control Module DTC's. Cycle the ignition from ON to OFF. Start the vehicle and observe the DRBIII®. With the DRBIII®, read DTC's. Does the DRBIII® display: Ign. UNLOCK RUN-START Output Over Volt? Yes → Go To 2 No → The condition that caused this DTC is currently not present. Use the wiring diagram/schematic as a guide, and inspect the related wiring harness for a possible intermittent condition. Perform BODY VERIFICATION TEST - VER 1.	All
2	With the DRBIII®, read the PCM DTCs. Are any Battery or Charging System DTC's present? Yes → Refer to the Powertrain Diagnostics for further assistance. Perform BODY VERIFICATION TEST - VER 1. No → Go To 3	All
3	**NOTE: This code may have set because of a battery charger installed incorrectly or the battery was jump started incorrectly.** With the DRBIII®, erase DTCs. Start the engine. Does the Ign. UNLOCK-R-S Output Over Volt DTC reset? Yes → Replace the FCM per Service Information. Perform BODY VERIFICATION TEST - VER 1. No → Test Complete.	All

Symptom:
IGN. UNLOCK-R-S OUTPUT SHORT TO GROUND

When Monitored and Set Condition:

IGN. UNLOCK-R-S OUTPUT SHORT TO GROUND

When Monitored: Ignition on.

Set Condition: When the output is active there is a short to ground fault detected for more than 1 second.

POSSIBLE CAUSES
TEST FOR CURRENT DTC'S
IPM INTERNALLY SHORTED TO GROUND
(F2) FCM OUTPUT (UNLOCK-RUN-START) CIRCUIT SHORTED TO GROUND
(F1) FCM OUTPUT (UNLOCK-RUN-START) CIRCUIT SHORTED TO GROUND
FCM

TEST	ACTION	APPLICABILITY
1	With the DRBIII®, record and erase the current Front Control Module DTC's. Cycle the ignition from ON to OFF. Start the vehicle and observe the DRBIII®. With the DRBIII®, read DTC's. Does the DRBIII® display: Ign. UNLOCK RUN-START Output short to ground? Yes → Go To 2 No → The condition that caused this DTC is currently not present. Use the wiring diagram/schematic as a guide, and inspect the related wiring harness for a possible intermittent condition. Perform BODY VERIFICATION TEST - VER 1.	All
2	Turn the ignition off. Disconnect the FCM from the IPM. Disconnect the C3 and C7 IPM harness connectors. Check connectors - Clean/repair as necessary. Measure the resistance between ground and the (F1, F2) FCM Output (UNLOCK-RUN-START) circuit the FCM/IPM harness connector and the IPM C3 and C7 harness connections. Is the resistance below 5.0 ohms? Yes → Replace the IPM per Service Information. Perform BODY VERIFICATION TEST - VER 1. No → Go To 3	All

IGN. UNLOCK-R-S OUTPUT SHORT TO GROUND — Continued

TEST	ACTION	APPLICABILITY
3	**NOTE: If this vehicle is equipped with a Manual Transaxle answer No to the test and continue.** Disconnect the Brake Trans Shift Interlock harness connector. Measure the resistance between ground and the (F2) FCM Output (Unlock-Run-Start) circuit at the Brake Trans Shift Interlock harness connector. Is the resistance below 5.0 ohms? Yes → Repair the short to ground in the (F2) FCM Output (Unlock-Run-Start) circuit. Perform BODY VERIFICATION TEST - VER 1. No → Go To 4	All
4	Disconnect the PCM C1 harness connector. Measure the resistance between ground and the (F1) FCM Output (Unlock-Run-Start) circuit at the IPM C3 harness connector. Is the resistance below 5.0 ohms? Yes → Repair the short to ground in the (F1) FCM Output (Unlock-Run-Start) circuit. Perform BODY VERIFICATION TEST - VER 1. No → Replace the FCM per Service Information. Perform BODY VERIFICATION TEST - VER 1.	All

Symptom:
IGNITION MUX SWITCH INPUT OPEN

When Monitored and Set Condition:

IGNITION MUX SWITCH INPUT OPEN

When Monitored: With the ignition on and battery voltage greater than 10.4 volts.

Set Condition: The ignition MUX sense circuit voltage at the BCM goes above 4.9 volts.

POSSIBLE CAUSES
IGNITION SWITCH SENSE CIRCUIT SHORTED TO VOLTAGE
IGNITION SWITCH FAILURE
IGNITION SWITCH SENSE RETURN CIRCUIT OPEN
BODY CONTROL MODULE
IGNITION SWITCH SENSE CIRCUIT OPEN
BODY CONTROL MODULE

TEST	ACTION	APPLICABILITY
1	Turn the ignition off. Disconnect the Ignition Switch 5-way connector. Turn the ignition on. Measure the voltage of the Ignition Switch Sense circuit. Is the voltage above 5.5 volts? Yes → Repair the Ignition Switch Sense circuit for a short to voltage. Perform BODY VERIFICATION TEST - VER 1. No → Go To 2	All
2	Turn the ignition off. Disconnect the Ignition Switch 5-way connector. Connect a jumper wire between the Ignition Switch Sense circuit and ground. With the DRBIII® in Sensors, read the IGNITION SW voltage. Does the DRBIII® display IGNITION SW 0.0 volts? Yes → Go To 3 No → Go To 5	All
3	Turn the ignition off. Disconnect the Ignition Switch 5-way connector. Connect a jumper wire between the Ignition Switch Sense circuit and the Ignition Switch Sense Return circuit. With the DRBIII® in Sensors, read the IGNITION SW voltage. Does the DRBIII® display IGNITION SW 0.0 volts? Yes → Replace the Ignition Switch in accordance with the service information. Perform BODY VERIFICATION TEST - VER 1. No → Go To 4	All

IGNITION MUX SWITCH INPUT OPEN — Continued

TEST	ACTION	APPLICABILITY
4	Turn the ignition off. Reconnect the Ignition Switch 5-way connector. Gain access to the Body Control Module C4 connector. Backprobe a jumper wire between the Ignition Switch Sense Return circuit and ground. With the DRBIII® in Sensors, read the IGNITION SW voltage. Does the DRBIII® display IGNITION SW 0.0 volts? Yes → Repair the Ignition Switch Sense Return circuit for an open. Perform BODY VERIFICATION TEST - VER 1. No → Replace the Body Control Module in accordance with the service information. Perform BODY VERIFICATION TEST - VER 1.	All
5	Turn the ignition off. Gain access to the Body Control Module C5 connector. Backprobe a jumper wire between the Ignition Switch Sense circuit and ground. With the DRBIII® in Sensors, read the IGNITION SW voltage. Does the DRBIII® display IGNITION SW 0.0 volts? Yes → Repair the Ignition Switch Sense circuit for an open. Perform BODY VERIFICATION TEST - VER 1. No → Replace the Body Control Module in accordance with the service information. Perform BODY VERIFICATION TEST - VER 1.	All

Symptom:
IGNITION MUX SWITCH INPUT SHORT

When Monitored and Set Condition:

IGNITION MUX SWITCH INPUT SHORT

When Monitored: With the ignition on and battery voltage greater than 10.4 volts.

Set Condition: The ignition MUX sense circuit voltage at the BCM goes below 0.5 volts for more than 2 seconds.

POSSIBLE CAUSES
IGNITION SWITCH SHORTED
IGNITION SWITCH SENSE CIRCUIT SHORTED TO GROUND
IGNITION SWITCH SENSE CIRCUIT SHORTED TO IGNITION SWITCH SENSE RETURN CIRCUIT
IGNITION SWITCH SENSE RETURN CIRCUIT SHORTED TO GROUND
BODY CONTROL MODULE

TEST	ACTION	APPLICABILITY
1	Turn the ignition off. Disconnect the Ignition Switch 5-way connector. With the DRBIII® in Sensors, read the IGNITION SW voltage. Does the DRBIII® display IGNITION SW 0.0 volts? Yes → Go To 2 No → Replace the Ignition Switch in accordance with the service information. Perform BODY VERIFICATION TEST - VER 1.	All
2	Turn the ignition off. Disconnect the Ignition Switch 5-way connector. Disconnect the Body Control Module C5 connector. Measure the resistance between ground and the Ignition Switch Sense circuit in the BCM C5 connector. Is the resistance below 10K ohms? Yes → Repair the Ignition Switch Sense circuit for a short to ground. Perform BODY VERIFICATION TEST - VER 1. No → Go To 3	All

IGNITION MUX SWITCH INPUT SHORT — Continued

TEST	ACTION	APPLICABILITY
3	Turn the ignition off. Gain access to the Body Control Module. Disconnect the Body Control Module C4 and C5 harness connectors. Disconnect the Ignition Switch 5-way harness connector. Measure the resistance between the Ignition Switch Sense circuit and the Ignition Switch Sense Return circuit. Is the resistance below 10K ohms? Yes → Repair the Ignition Switch Sense circuit for a short to the Ignition Switch Sense Return circuit. Perform BODY VERIFICATION TEST - VER 1. No → Go To 4	All
4	Turn the ignition off. Disconnect the Ignition Switch 5-way connector. Disconnect the Body Control Module C4 connector. Measure the resistance between ground and the Ignition Switch Sense Return circuit in the BCM C4 connector. Is the resistance below 10K ohms? Yes → Repair the Ignition Switch Sense Return circuit for a short to ground. Perform BODY VERIFICATION TEST - VER 1. No → Replace the Body Control Module in accordance with the service information. Perform BODY VERIFICATION TEST - VER 1.	All

Symptom:
IGNITION RUN OUTPUT SHORT

When Monitored and Set Condition:

IGNITION RUN OUTPUT SHORT

When Monitored: With the ignition on and battery voltage greater than 10.4 volts.

Set Condition: This DTC will set if the BCM detects voltage below 0.5 volts for more than 2 seconds on the Ignition Switch Output (Run) circuits.

POSSIBLE CAUSES
TEST FOR CURRENT DTCS
MODULE OR COMPONENT FAULT
FUSED IGNITION SWITCH OUTPUT (RUN) CIRCUIT SHORTED TO GROUND
BODY CONTROL MODULE

TEST	ACTION	APPLICABILITY
1	Turn the ignition on. With the DRBIII® in Body Computer, record and erase BCM DTCs. Cycle the ignition from ON to OFF. Start the engine. With the DRBIII® in Body Computer, read BCM DTCs. Does the DRBIII® display IGNITION RUN OUTPUT SHORT? Yes → Go To 2 No → The condition that caused this DTC is currently not present. Use the wiring diagram/schematic as a guide, and inspect the related wiring harness for a possible intermittent condition. Perform BODY VERIFICATION TEST - VER 1.	All

IGNITION RUN OUTPUT SHORT — Continued

TEST	ACTION	APPLICABILITY
2	**NOTE: Repeat this test until either the DTC is no longer present or all of the modules and components are disconnected from the Fused Ignition Switch Output (Run) circuit and the DTC is still present.** Turn the ignition off. Verify which of these modules and components are used on the vehicle you are diagnosing: HVAC (ATC or MTC); Rear ATC Control Switch; IP Switch Bank; Auto Daylight Mirror; Overhead Console; Heated Seat Module (Driver/Pass); Controller Antilock Brake. **NOTE: For the result of this test to be valid, disconnect only one module or component at a time and then verify if the DTC is still present.** Using the wiring diagram/schematic as a guide, disconnect the harness connector with the Fused Ignition Switch Output (Run) circuit from one module or component identified above. **NOTE: Check connectors - Clean/repair as necessary.** Turn the ignition on. With the DRBIII® in Body Computer, erase BCM DTCs. Cycle the ignition form ON to OFF. Start the engine. With the DRBIII® in Body Computer, read BCM DTCs. Does the DRBIII® display IGNITION RUN OUTPUT SHORT? Yes (All Modules/Components Disconnected Go To 3 No → Replace the module or the component that when disconnected did not reset the DTC in accordance with the Service Information. Perform BODY VERIFICATION TEST - VER 1.	All
3	**NOTE: All modules and components identified in Test Number 2 must be disconnected from the BCM's Fused Ignition Switch Output (Run) circuit and the DTC must still be present for the result of this test to be valid.** Turn the ignition off. Disconnect the Body Control Module (BCM) C3 and C4 harness connectors. Measure the resistance between ground and the Fused Ignition Switch Output (Run) circuits in the BCM C3 harness connector. Measure the resistance between ground and the Fused Ignition Switch Output (Run) circuit in the BCM C4 harness connector. Is the resistance below 10K ohms on any of the circuits? Yes → Repair the Fused Ignition Switch Output (Run) circuit(s) with a resistance below 10K ohms for a short to ground. Perform BODY VERIFICATION TEST - VER 1. No → Replace the Body Control Module (BCM) in accordance with the service information. Perform BODY VERIFICATION TEST - VER 1.	All

Symptom:
IGNITION RUN/START INPUT WIRING

When Monitored and Set Condition:

IGNITION RUN/START INPUT WIRING

When Monitored: With the ignition on and battery voltage greater than 10.4 volts.

Set Condition: The Fused Ignition Switch Output circuit voltage at the FCM goes below 0.5 volts.

POSSIBLE CAUSES
TEST FOR CURRENT DTC'S
FRONT CONTROL MODULE INTERNAL MALFUNCTION
FUSE AND RELAY CENTER INTERNAL MALFUNCTION
FUSED IGNITION SWITCH OUTPUT CIRCUIT OPEN

TEST	ACTION	APPLICABILITY
1	With the DRBIII®, record and erase the current Front Control Module DTC's. Cycle the ignition from ON to OFF. Start the vehicle and observe the DRBIII®. With the DRBIII®, read DTC's. Does the DRBIII® display: IGNITION RUN-START INPUT WIRING? Yes → Go To 2 No → The condition that caused this DTC is currently not present. Use the wiring diagram/schematic as a guide, and inspect the related wiring harness for a possible intermittent condition. Perform BODY VERIFICATION TEST - VER 1.	All
2	Turn the ignition off. Disconnect the Front Control Module from the Fuse and Relay Center. Measure the voltage of the Fused Ignition Switch Output circuit (cavity 37) at the Fuse and Relay Center side of the FCM connector. Turn the ignition on. Is the voltage above 10.0 volts? Yes → Replace the Front Control Module. Perform BODY VERIFICATION TEST - VER 1. No → Go To 3	All

IGNITION RUN/START INPUT WIRING — Continued

TEST	ACTION	APPLICABILITY
3	Turn the ignition off. Gain access to the bottom of the Fuse and Relay Center. Disconnect connector C9 from the Fuse and Relay Center. Measure the resistance of the Fused Ignition Switch Output circuit between the FCM connector cavity 37 and the Fuse and Relay Center connector C9 cavity 2. Is the resistance below 5.0 ohms? Yes → Repair the Fused Ignition Switch Output circuit for an open between the Fuse and Relay Center and the ignition switch. Perform BODY VERIFICATION TEST - VER 1. No → Replace the Fuse and Relay Center. Perform BODY VERIFICATION TEST - VER 1.	All

Symptom:
IGNITION START INPUT WIRING

When Monitored and Set Condition:

IGNITION START INPUT WIRING

When Monitored: With the ignition on and battery voltage greater than 10.4 volts.

Set Condition: The Fused Ignition Switch Output (Start) circuit voltage at the FCM goes below 0.5 volts.

POSSIBLE CAUSES
TEST FOR CURRENT DTC'S
FRONT CONTROL MODULE INTERNAL MALFUNCTION
FUSE AND RELAY CENTER INTERNAL MALFUNCTION
FUSED IGNITION SWITCH OUTPUT (START) CIRCUIT OPEN

TEST	ACTION	APPLICABILITY
1	With the DRBIII®, record and erase the current Front Control Module DTC's. Cycle the ignition from ON to OFF. Start the vehicle and observe the DRBIII®. With the DRBIII®, read DTC's. Does the DRBIII® display: IGNITION START INPUT WIRING? Yes → Go To 2 No → The condition that caused this DTC is currently not present. Use the wiring diagram/schematic as a guide, and inspect the related wiring harness for a possible intermittent condition. Perform BODY VERIFICATION TEST - VER 1.	All
2	Turn the ignition off. Disconnect the Front Control Module from the Fuse and Relay Center. Measure the voltage of the Fused Ignition Switch Output (Start) circuit (cavity 19) at the Fuse and Relay Center side of the FCM connector. Turn the ignition to the start position and monitor the voltage reading. Is the voltage above 10.0 volts with the ignition switch in the start position? Yes → Replace the Front Control Module. Perform BODY VERIFICATION TEST - VER 1. No → Go To 3	All

IGNITION START INPUT WIRING — Continued

TEST	ACTION	APPLICABILITY
3	Turn the ignition off. Gain access to the bottom of the Fuse and Relay Center. Disconnect connector C9 from the Fuse and Relay Center. Measure the resistance of the Fused Ignition Switch Output circuit between the FCM connector cavity 37 and the Fuse and Relay Center connector C9 cavity 2. Is the resistance below 5.0 ohms? Yes → Repair the Fused Ignition Switch Output (Start) circuit for an open between the Fuse and Relay Center and the ignition switch. Perform BODY VERIFICATION TEST - VER 1. No → Replace the Fuse and Relay Center. Perform BODY VERIFICATION TEST - VER 1.	All

Symptom:
INTERNAL DRIVER FAULT #1

When Monitored and Set Condition:

INTERNAL DRIVER FAULT #1

When Monitored: Continuously with the ignition on.

Set Condition: The FCM has detected an internal malfunction of the module.

POSSIBLE CAUSES
FRONT CONTROL MODULE INTERNAL MALFUNCTION
INTERMITTENT CONDITION

TEST	ACTION	APPLICABILITY
1	Turn the ignition on. With the DRBIII®, erase the current Front Control Module DTC's. Turn the ignition off, wait 10 seconds then turn the ignition on. With the DRBIII®, read the current Front Control Module DTC's. Does the DRBIII® display: INTERNAL DRIVER FAULT #1? Yes → Replace the Front Control Module. Perform BODY VERIFICATION TEST - VER 1. No → This symptom represents an internal malfunction in the Front Control Module. The condition that caused this symptom is currently not present. Perform BODY VERIFICATION TEST - VER 1.	All

Symptom:
INTERNAL DRIVER FAULT #2

When Monitored and Set Condition:

INTERNAL DRIVER FAULT #2

When Monitored: Continuously with the ignition on.

Set Condition: The FCM has detected an internal malfunction of the module.

POSSIBLE CAUSES
FRONT CONTROL MODULE INTERNAL MALFUNCTION
INTERMITTENT CONDITION

TEST	ACTION	APPLICABILITY
1	Turn the ignition on. With the DRBIII®, erase the current Front Control Module DTC's. Turn the ignition off, wait 10 seconds then turn the ignition on. With the DRBIII®, read the current Front Control Module DTC's. Does the DRBIII® display: INTERNAL DRIVER FAULT #2? Yes → Replace the Front Control Module. Perform BODY VERIFICATION TEST - VER 1. No → This symptom represents an internal malfunction in the Front Control Module. The condition that caused this symptom is currently not present. Perform BODY VERIFICATION TEST - VER 1.	All

Symptom:
INTERNAL DRIVER FAULT #3

When Monitored and Set Condition:

INTERNAL DRIVER FAULT #3

When Monitored: Continuously with the ignition on.

Set Condition: The FCM has detected an internal malfunction of the module.

POSSIBLE CAUSES
FRONT CONTROL MODULE INTERNAL MALFUNCTION
INTERMITTENT CONDITION

TEST	ACTION	APPLICABILITY
1	Turn the ignition on. With the DRBIII®, erase the current Front Control Module DTC's. Turn the ignition off, wait 10 seconds then turn the ignition on. With the DRBIII®, read the current Front Control Module DTC's. Does the DRBIII® display: INTERNAL DRIVER FAULT #3? Yes → Replace the Front Control Module. Perform BODY VERIFICATION TEST - VER 1. No → This symptom represents an internal malfunction in the Front Control Module. The condition that caused this symptom is currently not present. Perform BODY VERIFICATION TEST - VER 1.	All

Symptom:
REPLACE MODULE

When Monitored and Set Condition:

REPLACE MODULE

When Monitored: Continuously with the ignition on.

Set Condition: The FCM has detected an internal malfunction of the module.

POSSIBLE CAUSES
FRONT CONTROL MODULE INTERNAL MALFUNCTION
INTERMITTENT CONDITION

TEST	ACTION	APPLICABILITY
1	Turn the ignition on. With the DRBIII®, erase the current Front Control Module DTC's. Turn the ignition off, wait 10 seconds then turn the ignition on. With the DRBIII®, read the current Front Control Module DTC's. Did this DTC reset? Yes → Replace the Front Control Module in accordance with the service information. Perform BODY VERIFICATION TEST - VER 1. No → This symptom represents an internal malfunction in the Front Control Module. The condition that caused this symptom is currently not present. Perform BODY VERIFICATION TEST - VER 1.	All

Symptom:
RUN/START HARDWARE INPUT FAILURE

When Monitored and Set Condition:

RUN/START HARDWARE INPUT FAILURE

When Monitored: With the ignition on and battery voltage greater than 10.4 volts.

Set Condition: The Fused Ignition Switch Output circuit voltage at the BCM goes below 0.5 volts and the BCM detects a voltage mismatch between the two ignition switch inputs.

POSSIBLE CAUSES
TEST FOR CURRENT DTC'S
FUSED IGNITION SWITCH OUTPUT CIRCUIT OPEN
IGNITION SWITCH
BODY CONTROL MODULE

TEST	ACTION	APPLICABILITY
1	With the DRBIII®, record and erase DTC's. Cycle the ignition from ON to OFF. Start the vehicle and observe the DRBIII®. With the DRBIII®, read DTC's. Does the DRBIII® display RUN/START HARDWIRE INPUT FAILURE? Yes → Go To 2 No → The condition that caused this DTC is currently not present. Use the wiring diagram/schematic as a guide, and inspect the related wiring harness for a possible intermittent condition. Perform BODY VERIFICATION TEST - VER 1.	All
2	Turn the ignition off. Gain access to the Ignition Switch connector. Turn the ignition on. While back probing, measure the voltage of the Fused Ignition Switch Output (Run/Start) circuit. Is the voltage above 10.0 volts? Yes → Go To 3 No → Replace the Ignition Switch in accordance with the service information. Perform BODY VERIFICATION TEST - VER 1.	All

RUN/START HARDWARE INPUT FAILURE — Continued

TEST	ACTION	APPLICABILITY
3	Turn the ignition off. Gain access to the Body Control Module C2 connector. While back probing, measure the voltage of the Fused Ignition Switch Output (Run/Start) circuit. Is the voltage above 10.0 volts? Yes → Repair the Fused Ignition Switch Output circuit for an open. Perform BODY VERIFICATION TEST - VER 1. No → Replace the Body Control Module in accordance with the service information. Perform BODY VERIFICATION TEST - VER 1.	All

Symptom List:

ABS LAMP CKT SHORT
ABS LAMP OPEN
AIRBAG LAMP CKT SHORT
AIRBAG LAMP OPEN

Test Note: All symptoms listed above are diagnosed using the same tests. The title for the tests will be ABS LAMP CKT SHORT.

POSSIBLE CAUSES
INSTRUMENT CLUSTER

TEST	ACTION	APPLICABILITY
1	**NOTE: The Instrument Cluster performs internal tests on the ABS and Airbag indicator lamps during each ignition cycle. Instrument cluster LEDs are not replaceable.** Turn the ignition on. With the DRBIII®, record and erase DTC's. Turn the ignition off, wait 15 seconds, then turn the ignition on. With the DRBIII®, read DTCs. Did the DTC reset? Yes → Replace the Instrument Cluster in accordance with the Service Information. Perform BODY VERIFICATION TEST - VER 1. No → Test Complete.	All

Symptom:
EL PANEL SHORT

POSSIBLE CAUSES
CHECK EXTERIOR ILLUMINATION
CHECK OPERATION OF ALL GAUGES
VERIFY CONCERN
PANEL LAMP DRIVER CIRCUIT SHORT TO GROUND
PANEL LAMP DRIVER OPEN CIRCUIT
OPEN GROUND CIRCUIT
BCM PANEL LAMP DRIVER CIRCUIT INTERNAL FAILURE
INSTRUMENT CLUSTER PANEL LAMPS DRIVER INTERNAL FAILURE

TEST	ACTION	APPLICABILITY
1	Ignition on, engine not running. Turn the Headlamp Switch to the ON position. Monitor the Instrument Cluster gauges for illumination. Are any Instrument Cluster gauges illuminated? Yes → Go To 3 No → Go To 2	All
2	Ignition on, engine not running. Turn the Headlamp Switch to the ON position. Monitor the Instrument Cluster gauges for illumination. Are all of the Instrument Cluster gauges illuminated? Yes → Go To 3 No → Replace the Instrument Cluster. Perform BODY VERIFICATION TEST - VER 1.	All
3	Ignition on, engine not running. Turn the headlamp switch to the ON position. Monitor the Headlamps for illumination. Are the Headlamps illuminated? Yes → Go To 4 No → Refer to EXTERIOR ILLUMINATION for the related symptom(s). Perform BODY VERIFICATION TEST - VER 1.	All
4	Ignition on, engine not running. With the DRBIII®, erase DTCs. Cycle the ignition switch from OFF to ON. Wait 1 to 2 minutes for the system to cycle. With the DRBIII®, read DTCs. Did the DTC reset? Yes → Go To 5 No → Perform the Instrument Cluster Self-Test and verify the concern. Perform BODY VERIFICATION TEST - VER 1.	All

EL PANEL SHORT — Continued

TEST	ACTION	APPLICABILITY
5	Turn the ignition off. Disconnect the Instrument Cluster harness connector. Measure the resistance between ground and the Panel Lamps Driver circuit (Instrument Cluster harness). Disconnect the BCM C2 harness connector. Is the resistance above 10,000 ohms? Yes → Go To 6 No → Repair the Panel Lamps Driver Circuit for a Short to Ground. Perform BODY VERIFICATION TEST - VER 1.	All
6	Turn the ignition off. Disconnect the BCM C2 harness connector. Disconnect the Instrument Cluster harness connector. Measure the resistance of the Panel Lamps Driver circuit between the BCM C2 connector and the Instrument Cluster connector. Is the resistance below 5.0 ohms? Yes → Go To 7 No → Repair the Panel Lamp Driver Circuit for an open. Perform BODY VERIFICATION TEST - VER 1.	All
7	Turn the ignition off. Disconnect the Instrument Cluster harness connector. Measure the resistance of the Instrument Cluster harness ground circuits. Are the resistances below 5.0 ohms? Yes → Go To 8 No → Repair Instrument Cluster ground circuit for an open. Perform BODY VERIFICATION TEST - VER 1.	All
8	Turn the ignition off. Disconnect the BCM C2 harness connector. Connect a jumper wire between Panel Lamps Driver circuit (BCM C2 harness) and B(+). Turn the ignition on. Monitor the Instrument Cluster gauges for illumination. Did the Instrument Cluster gauges illuminate? Yes → Replace the Body Control Module. With the DRBIII, erase DTC's. Perform BODY VERIFICATION TEST - VER 1. No → Test Complete.	All

Symptom:
FRONT FOG LAMP INDICATOR OPEN

POSSIBLE CAUSES
INTERMITTENT WIRING AND CONNECTORS
FRONT FOG LAMP INDICATOR CIRCUIT OPEN
FRONT FOG LAMP INDICATOR GROUND CIRCUIT OPEN
FRONT FOG LAMP INDICATOR CIRCUIT SHORT TO VOLTAGE
HEADLAMP SWITCH
BODY CONTROL MODULE

TEST	ACTION	APPLICABILITY
1	Turn the ignition on. With the DRBIII®, record and erase Body Control Module DTC's. Turn the ignition off, wait 15 seconds, then turn the ignition on. Turn on the Front Fog Lamps. With the DRBIII®, read DTCs. Does the DRBIII® display FRONT FOG LAMP INDICATOR OPEN? Yes → Go To 2 No → Go To 8	All
2	Turn the ignition off to the lock position. **Note: Check connectors - Clean/repair as necessary.** Ignition on, engine not running. Turn ON the Front Fog Lamps. Using a 12-volt test light connected to ground, back probe the Front Fog Lamp Indicator circuit in the Headlamp Switch harness connector. **NOTE: The test light must illuminate brightly. Compare the brightness to that of a direct connection to the battery.** Does the test light illuminate brightly? Yes → Go To 3 No → Go To 6	All
3	Turn the ignition off to the lock position. Disconnect the Body Control Module harness connector. Disconnect the Headlamp Switch harness connector. **Note: Check connectors - Clean/repair as necessary.** Measure the resistance of the Front Fog Lamp Indicator Ground circuit from the Body Control Module harness connector to the Headlamp Switch harness connector. Is the resistance above 5.0 ohms? Yes → Repair the Front Fog Lamp Indicator Ground circuit for an open. Perform BODY VERIFICATION TEST - VER 1. No → Go To 4	All

FRONT FOG LAMP INDICATOR OPEN — Continued

TEST	ACTION	APPLICABILITY
4	Turn the ignition off to the lock position. Disconnect the Body Control Module harness connector. Disconnect the Headlamp Switch harness connector. **Note: Check connectors - Clean/repair as necessary.** Ignition on, engine not running. Measure the voltage of the Front Fog Lamp Indicator circuit in the Headlamp Switch harness connector. Is the voltage above 0.5 volt? Yes → Repair the Front Fog Lamp Indicator circuit for a short to voltage. Perform BODY VERIFICATION TEST - VER 1. No → Go To 5	All
5	If there are no possible causes remaining, view repair. Repair Replace the Headlamp Switch. Perform BODY VERIFICATION TEST - VER 1.	All
6	Turn the ignition off to the lock position. Disconnect the Body Control Module harness connector. Disconnect the Headlamp Switch harness connector. **Note: Check connectors - Clean/repair as necessary.** Measure the resistance of the Front Fog Lamp Indicator circuit from the Body Control Module harness connector to the Headlamp Switch harness connector. Is the resistance above 5.0 ohms? Yes → Repair the Front Fog Lamp Indicator circuit for an open. Perform BODY VERIFICATION TEST - VER 1. No → Go To 7	All
7	If there are no possible causes remaining, view repair. Repair Replace the Body Control Module. Perform BODY VERIFICATION TEST - VER 1.	All
8	The conditions necessary to set this DTC are not present at this time. Using the schematics as a guide, inspect the wiring and connectors specific to this circuit. Wiggle the wiring while checking for shorts and open circuits. Were there any problems found? Yes → Repair as necessary. Perform BODY VERIFICATION TEST - VER 1. No → Test Complete.	All

Symptom:
FRONT FOG LAMP INDICATOR SHORT TO GROUND

POSSIBLE CAUSES
INTERMITTENT WIRING AND CONNECTORS
FRONT FOG LAMP INDICATOR CIRCUIT SHORT TO GROUND
HEADLAMP SWITCH
BODY CONTROL MODULE

TEST	ACTION	APPLICABILITY
1	Turn the ignition on. With the DRBIII®, record and erase Body Control Module DTC's. Turn the ignition off, wait 15 seconds, then turn the ignition on. With the DRBIII®, read DTCs. Does the DRBIII® display FRONT FOG LAMP INDICATOR SHORT TO GROUND? Yes → Go To 2 No → Go To 6	All
2	Turn the ignition off to the lock position. **Note: Check connectors - Clean/repair as necessary.** Ignition on, engine not running. Turn ON the Front Fog Lamps. Using a 12-volt test light connected to ground, back probe the Rear Fog Lamp Indicator circuit in the Headlamp Switch harness connector. **NOTE: The test light must illuminate brightly. Compare the brightness to that of a direct connection to the battery.** Does the test light illuminate brightly? Yes → Go To 3 No → Go To 4	All
3	If there are no possible causes remaining, view repair. Repair Replace the Headlamp Switch. Perform BODY VERIFICATION TEST - VER 1.	All
4	Turn the ignition off to the lock position. Disconnect the Body Control Module harness connector. Disconnect the Headlamp Switch harness connector. **Note: Check connectors - Clean/repair as necessary.** Measure the resistance between ground and the Front Fog Lamp Indicator circuit. Is the resistance below 5.0 ohms? Yes → Repair the Front Fog Lamp Indicator circuit for a short to ground. Perform BODY VERIFICATION TEST - VER 1. No → Go To 5	All
5	If there are no possible causes remaining, view repair. Repair Replace the Body Control Module. Perform BODY VERIFICATION TEST - VER 1.	All

FRONT FOG LAMP INDICATOR SHORT TO GROUND — Continued

TEST	ACTION	APPLICABILITY
6	The conditions necessary to set this DTC are not present at this time. Using the schematics as a guide, inspect the wiring and connectors specific to this circuit. Wiggle the wiring while checking for shorts and open circuits. Were there any problems found? Yes → Repair as necessary. Perform BODY VERIFICATION TEST - VER 1. No → Test Complete.	All

Symptom List:

FUEL GAUGE CHECKSUM FAILURE
SPEEDOMETER CHECKSUM FAILURE
TACHOMETER CHECKSUM FAILURE
TEMPERATURE GAUGE CHECKSUM FAILURE

Test Note: All symptoms listed above are diagnosed using the same tests. The title for the tests will be FUEL GAUGE CHECKSUM FAILURE.

POSSIBLE CAUSES
INSTRUMENT CLUSTER

TEST	ACTION	APPLICABILITY
1	Turn the ignition on. With the DRBIII®, record and erase DTC's. Turn the ignition off, wait 15 seconds, then turn the ignition on. With the DRBIII®, read DTCs. Did the Checksum DTC reset? Yes → Replace the Instrument Cluster in accordance with the Service Information. Perform BODY VERIFICATION TEST - VER 1. No → Test Complete.	All

Symptom:
FUEL LEVEL SENDING UNIT INPUT OPEN

When Monitored and Set Condition:

FUEL LEVEL SENDING UNIT INPUT OPEN

When Monitored: With the ignition on.

Set Condition: Fuel Level Input to the BCM is greater than 9.8 volts for greater than 62.5 milliseconds.

POSSIBLE CAUSES
INTERMITTENT CONDITION
FUEL LEVEL SENSOR SIGNAL CIRCUIT SHORTED TO B(+)
GROUND CIRCUIT OPEN
FUEL LEVEL SENDING UNIT
FUEL LEVEL SENSOR SIGNAL CIRCUIT OPEN
BCM

TEST	ACTION	APPLICABILITY
1	Turn the ignition on. With the DRBIII®, erase DTCs. Cycle the ignition off and on, leaving ignition key on for at least 15 seconds. With the DRBIII® in Body Computer, read DTCs. Does the DTC reset? Yes → Go To 2 No → Go To 7	All
2	Turn the ignition off. Disconnect the Fuel Tank Module harness connector. Turn the ignition on. **NOTE: The BCM sends out a low current 12 volt signal on the Fuel Level Sensor Signal circuit. This low current should not illuminate a 12 volt test light.** Using a 12-volt test light connected to ground, probe the Fuel Level Sensor Signal circuit in the Fuel Tank Module harness connector. Does the test light illuminate? Yes → Repair the Fuel Level Sensor Signal circuit shorted to battery voltage. Perform BODY VERIFICATION TEST - VER 1. No → Go To 3	All

FUEL LEVEL SENDING UNIT INPUT OPEN — Continued

TEST	ACTION	APPLICABILITY
3	Turn the ignition on. Disconnect the Fuel Tank Module harness connector. Measure the resistance of the Ground circuits in the Fuel Tank Module harness connector. Is the resistance below 5.0 ohms for both measurements? Yes → Go To 4 No → Repair the Ground circuit for an open. Perform BODY VERIFICATION TEST - VER 1.	All
4	Turn the ignition off. Disconnect the Fuel Tank Module harness connector. Turn the ignition on. With the DRBIII® in Body Computer then Sensors, monitor the Fuel Sensor. Using a jumper wire, jumper the Fuel Level Sensor Signal circuit to the ground circuit in the Fuel Tank Module harness connector. Does the DRB display below 0.5 volt? Yes → Replace the Fuel Level Sending Unit. Perform BODY VERIFICATION TEST - VER 1. No → Go To 5	All
5	Turn the ignition off. Disconnect the Fuel Tank Module harness connector. Disconnect the BCM C3 harness connector. Measure the resistance of the Fuel Level Sensor Signal circuit between the Fuel Tank Module harness connector and the BCM harness connector. Is the resistance below 5.0 ohms? Yes → Go To 6 No → Repair the Fuel Level Sensor Signal circuit for an open. Perform BODY VERIFICATION TEST - VER 1.	All
6	If there are no possible causes remaining, view repair. Repair Replace the Body Control Module. Perform BODY VERIFICATION TEST - VER 1.	All
7	**WARNING: WHEN THE ENGINE IS OPERATING, DO NOT STAND IN A DIRECT LINE WITH THE FAN. DO NOT PUT YOUR HANDS NEAR THE PULLEYS, BELTS OR FAN. DO NOT WEAR LOOSE CLOTHING.** **NOTE: The conditions that set the DTC are not present at this time. The following list may help in identifying the intermittent condition.** With the engine running at normal operating temperature, monitor the DRB parameters related to the DTC while wiggling the wiring harness. Look for parameter values to change and/or a DTC to set. Refer to any Technical Service Bulletins (TSB) that may apply. Visually inspect the related wiring harness. Look for any chafed, pierced, pinched, or partially broken wires. Visually inspect the related wiring harness connectors. Look for broken, bent, pushed out, or corroded terminals. Were any of the above conditions present? Yes → Repair as necessary Perform BODY VERIFICATION TEST - VER 1. No → Test Complete.	All

Symptom:
FUEL LEVEL SENDING UNIT INPUT SHORT

When Monitored and Set Condition:

FUEL LEVEL SENDING UNIT INPUT SHORT

When Monitored: With the ignition on.

Set Condition: Fuel Level Input to the BCM is less than 2 volts for greater than 62.5 milliseconds.

POSSIBLE CAUSES
INTERMITTENT CONDITION
FUEL LEVEL SENDING UNIT
FUEL LEVEL SENSOR SIGNAL SHORTED TO GROUND
BCM

TEST	ACTION	APPLICABILITY
1	Turn the ignition on. With the DRBIII®, erase DTCs. Cycle the ignition off and on, leaving ignition key on for at least 15 seconds. With the DRBIII® in Body Computer, read DTCs. Does the DTC reset? Yes → Go To 2 No → Go To 5	All
2	Turn the ignition on. With the DRBIII® in Body Computer and then Sensors, monitor the Fuel Sensor. Disconnect the Fuel Tank Module harness connector. Does the Fuel Sensor voltage go above 9.5 volts? Yes → Replace the Fuel Level Sending Unit. Perform BODY VERIFICATION TEST - VER 1. No → Go To 3	All
3	Turn the ignition off. Disconnect the BCM C3 harness connector. Disconnect Fuel Tank Module harness connector. Measure the resistance of the Fuel Level Sensor Signal circuit in the BCM harness connector to ground. Is the resistance below 5.0 ohms? Yes → Repair the Fuel Level Sensor Signal circuit for a short to ground. Perform BODY VERIFICATION TEST - VER 1. No → Go To 4	All

FUEL LEVEL SENDING UNIT INPUT SHORT — Continued

TEST	ACTION	APPLICABILITY
4	If there are no possible causes remaining, view repair. Repair Replace the Body Control Module. Perform BODY VERIFICATION TEST - VER 1.	All
5	**WARNING: WHEN THE ENGINE IS OPERATING, DO NOT STAND IN A DIRECT LINE WITH THE FAN. DO NOT PUT YOUR HANDS NEAR THE PULLEYS, BELTS OR FAN. DO NOT WEAR LOOSE CLOTHING.** **NOTE: The conditions that set the DTC are not present at this time. The following list may help in identifying the intermittent condition.** With the engine running at normal operating temperature, monitor the DRB parameters related to the DTC while wiggling the wiring harness. Look for parameter values to change and/or a DTC to set. Refer to any Technical Service Bulletins (TSB) that may apply. Visually inspect the related wiring harness. Look for any chafed, pierced, pinched, or partially broken wires. Visually inspect the related wiring harness connectors. Look for broken, bent, pushed out, or corroded terminals. Were any of the above conditions present? Yes → Repair as necessary Perform BODY VERIFICATION TEST - VER 1. No → Test Complete.	All

Symptom:
IOD WAKEUP CLUSTER OUTPUT OPEN

When Monitored and Set Condition:

IOD WAKEUP CLUSTER OUTPUT OPEN

When Monitored: With the ignition on.

Set Condition: The BCM is active and the Instrument Cluster does not respond on the Instrument Cluster Wake Up Sense circuit.

POSSIBLE CAUSES
INTERMITTENT CONDITION
INSTRUMENT CLUSTER WAKE UP SENSE CIRCUIT OPEN
INSTRUMENT CLUSTER WAKE UP SENSE CIRCUIT SHORT TO GROUND
INSTRUMENT CLUSTER
BODY CONTROL MODULE

TEST	ACTION	APPLICABILITY
1	Turn the ignition on. With the DRBIII®, erase DTCs. Cycle the ignition off and on several times, leaving ignition key on for at least 15 seconds. With the DRBIII® in Body Computer, read DTCs. Does the DTC reset? Yes → Go To 2 No → Go To 5	All
2	Turn the ignition off. Disconnect the BCM C4 harness connector. Turn the ignition on. Measure the voltage of the Instrument Cluster Wake Up Sense circuit in the BCM C4 harness connector. Is the voltage above 10.0 volts? Yes → Replace the Body Control Module in accordance with the service information. Perform BODY VERIFICATION TEST - VER 1. No → Go To 3	All

IOD WAKEUP CLUSTER OUTPUT OPEN — Continued

TEST	ACTION	APPLICABILITY
3	Turn the ignition off. Disconnect the Instrument Cluster harness connector. Disconnect the BCM C4 harness connector. Measure the resistance of the Instrument Cluster Wake Up Sense circuit between the BCM C4 harness connector and the MIC harness connector. Is the resistance below 5.0 ohms? Yes → Go To 4 No → Repair the Instrument Cluster Wake Up Sense circuit for an open. Perform BODY VERIFICATION TEST - VER 1.	All
4	Turn the ignition off. Disconnect the Instrument Cluster harness connector. Disconnect the BCM C4 harness connector. Measure the resistance of the Instrument Cluster Wake Up Sense circuit in the MIC harness connector to ground. Is the resistance below 5.0 ohms? Yes → Repair the Instrument Cluster Wake Up Sense circuit for a shorted to ground. Perform BODY VERIFICATION TEST - VER 1. No → Replace the Instrument Cluster in accordance with the service information. Perform BODY VERIFICATION TEST - VER 1.	All
5	**WARNING: WHEN THE ENGINE IS OPERATING, DO NOT STAND IN A DIRECT LINE WITH THE FAN. DO NOT PUT YOUR HANDS NEAR THE PULLEYS, BELTS OR FAN. DO NOT WEAR LOOSE CLOTHING.** **NOTE: The conditions that set the DTC are not present at this time. The following list may help in identifying the intermittent condition.** With the engine running at normal operating temperature, monitor the DRB parameters related to the DTC while wiggling the wiring harness. Look for parameter values to change and/or a DTC to set. Refer to any Technical Service Bulletins (TSB) that may apply. Visually inspect the related wiring harness. Look for any chafed, pierced, pinched, or partially broken wires. Visually inspect the related wiring harness connectors. Look for broken, bent, pushed out, or corroded terminals. Were any of the above conditions present? Yes → Repair as necessary Perform BODY VERIFICATION TEST - VER 1. No → Test Complete.	All

Symptom:

IOD WAKEUP CLUSTER OUTPUT SHORT

When Monitored and Set Condition:

IOD WAKEUP CLUSTER OUTPUT SHORT

When Monitored: With the ignition on.

Set Condition: The BCM is active and senses the Instrument Cluster Wake Up Sense circuit shorted high.

POSSIBLE CAUSES
INTERMITTENT CONDITION
INSTRUMENT CLUSTER WAKE UP SENSE CIRCUIT SHORTED TO VOLTAGE
INSTRUMENT CLUSTER
BODY CONTROL MODULE

TEST	ACTION	APPLICABILITY
1	Turn the ignition on. With the DRBIII®, erase DTCs. Cycle the ignition off and on several times, leaving the ignition key on for at least 15 seconds. With the DRBIII® in Body Computer, read DTCs. Does the DTC reset? Yes → Go To 2 No → Go To 4	All
2	Turn the ignition off. Disconnect the BCM C4 harness connector. Turn the ignition on. Using a 12-volt test light connected to ground, probe the Instrument Cluster Wake Up Sense circuit. Is the test light illuminated? Yes → Go To 3 No → Replace the Body Control Module in accordance with the service information. Perform BODY VERIFICATION TEST - VER 1.	All

IOD WAKEUP CLUSTER OUTPUT SHORT — Continued

TEST	ACTION	APPLICABILITY
3	Turn the ignition off. Disconnect the BCM C4 harness connector. Disconnect the Instrument Cluster harness connector. Turn the ignition on. Using a 12-volt test light connected to ground, probe the Instrument Cluster Wake Up Sense circuit. Is the test light illuminated? Yes → Repair the Instrument Cluster Wake Up Sense circuit for a short to voltage. Perform BODY VERIFICATION TEST - VER 1. No → Replace the Instrument Cluster in accordance with the service information. Perform BODY VERIFICATION TEST - VER 1.	All
4	**WARNING: WHEN THE ENGINE IS OPERATING, DO NOT STAND IN A DIRECT LINE WITH THE FAN. DO NOT PUT YOUR HANDS NEAR THE PULLEYS, BELTS OR FAN. DO NOT WEAR LOOSE CLOTHING.** **NOTE: The conditions that set the DTC are not present at this time. The following list may help in identifying the intermittent condition.** With the engine running at normal operating temperature, monitor the DRB parameters related to the DTC while wiggling the wiring harness. Look for parameter values to change and/or a DTC to set. Refer to any Technical Service Bulletins (TSB) that may apply. Visually inspect the related wiring harness. Look for any chafed, pierced, pinched, or partially broken wires. Visually inspect the related wiring harness connectors. Look for broken, bent, pushed out, or corroded terminals. Were any of the above conditions present? Yes → Repair as necessary Perform BODY VERIFICATION TEST - VER 1. No → Test Complete.	All

Symptom:
LEFT TURN SIGNAL INDICATOR DRIVER CIRCUIT OPEN

When Monitored and Set Condition:

LEFT TURN SIGNAL INDICATOR DRIVER CIRCUIT OPEN

When Monitored: With the ignition on.

Set Condition: The BCM detects an open in the Left Turn Signal Indicator Driver circuit.

POSSIBLE CAUSES
INTERMITTENT CONDITION
FUSED B(+) CIRCUIT OPEN
INSTRUMENT CLUSTER
LEFT TURN INDICATOR DRIVER CIRCUIT SHORTED TO GROUND
LEFT TURN SIGNAL INDICATOR DRIVER CIRCUIT OPEN
BCM

TEST	ACTION	APPLICABILITY
1	Turn the ignition on. Monitor the Left Turn Signal Indicator. Operate the Left Turn Signal. Is the Indicator lamp operating correctly? Yes → Go To 2 No → Go To 3	All
2	**WARNING: WHEN THE ENGINE IS OPERATING, DO NOT STAND IN A DIRECT LINE WITH THE FAN. DO NOT PUT YOUR HANDS NEAR THE PULLEYS, BELTS OR FAN. DO NOT WEAR LOOSE CLOTHING.** **NOTE: The conditions that set the DTC are not present at this time. The following list may help in identifying the intermittent condition.** With the engine running at normal operating temperature, monitor the DRB parameters related to the DTC while wiggling the wiring harness. Look for parameter values to change and/or a DTC to set. Refer to any Technical Service Bulletins (TSB) that may apply. Visually inspect the related wiring harness. Look for any chafed, pierced, pinched, or partially broken wires. Visually inspect the related wiring harness connectors. Look for broken, bent, pushed out, or corroded terminals. Were any of the above conditions present? Yes → Repair as necessary Perform BODY VERIFICATION TEST - VER 1. No → Test Complete.	All

LEFT TURN SIGNAL INDICATOR DRIVER CIRCUIT OPEN — Continued

TEST	ACTION	APPLICABILITY
3	Turn the ignition off. Disconnect the Instrument Cluster harness connector. Turn the ignition on. Using a 12-volt test light connected to ground, probe the Fused B+ circuit in the Instrument Cluster harness connector. Does the test light illuminate brightly? Yes → Go To 4 No → Repair the Fused B(+) circuit for an open. Perform BODY VERIFICATION TEST - VER 1.	All
4	Turn the ignition off. Disconnect the Instrument Cluster harness connector. Turn the ignition on. Using a 12-volt test light connected to 12-volts, probe the Left Indicator Driver circuit in the Instrument Cluster harness connector. Operate the Multi-Function Switch and turn the Left Indication on. Does the test light flash on and off? Yes → Remove and inspect the Bulb. If OK, replace the Instrument Cluster printed circuit board. Perform BODY VERIFICATION TEST - VER 1. No → Go To 5	All
5	Turn the ignition off. Disconnect the Instrument Cluster harness connector. Disconnect the BCM C4 harness connector. Measure the resistance of the Left Turn Indicator Driver circuit at the Instrument Cluster harness connector to ground. Is the resistance below 5.0 ohms? Yes → Repair the Left Turn Signal Indicator Driver circuit for a short to ground. Perform BODY VERIFICATION TEST - VER 1. No → Go To 6	All
6	Turn the ignition off. Disconnect the Instrument Cluster harness connector. Disconnect the BCM C4 harness connector. Measure the resistance of the Left Turn Indicator Driver circuit between the BCM harness connector and the Instrument Cluster harness connector. Is the resistance below 5.0 ohms? Yes → Go To 7 No → Repair the Left Turn Signal Indicator Driver circuit for an open. Perform BODY VERIFICATION TEST - VER 1.	All
7	If there are no possible causes remaining, view repair. Repair Replace the Body Control Module in accordance with the service information. Perform BODY VERIFICATION TEST - VER 1.	All

Symptom:

LEFT TURN SIGNAL INDICATOR DRIVER CIRCUIT OPEN (EXPORT)

When Monitored and Set Condition:

LEFT TURN SIGNAL INDICATOR DRIVER CIRCUIT OPEN (EXPORT)

When Monitored: With the ignition on.

Set Condition: The BCM detects an open in the Left Turn Signal Indicator Driver circuit.

POSSIBLE CAUSES
INTERMITTENT CONDITION
FUSED B(+) CIRCUIT OPEN
MESSAGE CENTER OPERATION
LEFT TURN INDICATOR DRIVER CIRCUIT SHORTED TO GROUND
LEFT TURN INDICATOR DRIVER CIRCUIT OPEN
BCM

TEST	ACTION	APPLICABILITY
1	Turn the ignition on. Monitor the Left Turn Signal Indicator. Operate the Left Turn Signal. Is the Indicator lamp operating correctly? Yes → Go To 2 No → Go To 3	All
2	**WARNING: WHEN THE ENGINE IS OPERATING, DO NOT STAND IN A DIRECT LINE WITH THE FAN. DO NOT PUT YOUR HANDS NEAR THE PULLEYS, BELTS OR FAN. DO NOT WEAR LOOSE CLOTHING.** **NOTE: The conditions that set the DTC are not present at this time. The following list may help in identifying the intermittent condition.** With the engine running at normal operating temperature, monitor the DRB parameters related to the DTC while wiggling the wiring harness. Look for parameter values to change and/or a DTC to set. Refer to any Technical Service Bulletins (TSB) that may apply. Visually inspect the related wiring harness. Look for any chafed, pierced, pinched, or partially broken wires. Visually inspect the related wiring harness connectors. Look for broken, bent, pushed out, or corroded terminals. Were any of the above conditions present? Yes → Repair as necessary Perform BODY VERIFICATION TEST - VER 1. No → Test Complete.	All

LEFT TURN SIGNAL INDICATOR DRIVER CIRCUIT OPEN (EXPORT) — Continued

TEST	ACTION	APPLICABILITY
3	Turn the ignition off. Disconnect the Message Center harness connector. Turn the ignition on. Using a 12-volt test light connected to ground, probe the Fused B+ circuit in the Message Center harness connector. Does the test light illuminate brightly? Yes → Go To 4 No → Repair the Fused B(+) circuit for an open. Perform BODY VERIFICATION TEST - VER 1.	All
4	Turn the ignition off. Disconnect the Message Center harness connector. Turn the ignition on. Using a 12-volt test light connected to 12-volts, probe the Left Indicator Driver circuit in the Message Center harness connector. Operate the Multi-Function Switch and turn the Left Turn Indicator on. Does the test light flash on and off? Yes → Remove and inspect the Indicator bulb. If OK, replace the Message Center. Perform BODY VERIFICATION TEST - VER 1. No → Go To 5	All
5	Turn the ignition off. Disconnect the Message Center harness connector. Disconnect the BCM C4 harness connector. Measure the resistance of the Left Turn Indicator Driver circuit at the Message Center harness connector to ground. Is the resistance below 5.0 ohms? Yes → Repair the Left Turn Indicator Driver circuit for a short to ground. Perform BODY VERIFICATION TEST - VER 1. No → Go To 6	All
6	Turn the ignition off. Disconnect the Message Center harness connector. Disconnect the BCM C4 harness connector. Measure the resistance of the Left Turn Indicator Driver circuit between the BCM harness connector and the Message Center harness connector. Is the resistance below 5.0 ohms? Yes → Go To 7 No → Repair the Left Turn Indicator Driver circuit for an open. Perform BODY VERIFICATION TEST - VER 1.	All
7	If there are no possible causes remaining, view repair? Repair Replace the Body Control Module in accordance with the service information. Perform BODY VERIFICATION TEST - VER 1.	All

Symptom:
LEFT TURN SIGNAL INDICATOR SHORT

When Monitored and Set Condition:

LEFT TURN SIGNAL INDICATOR SHORT

When Monitored: With the ignition on.

Set Condition: The BCM detects a short to voltage in the Left Turn Indicator Driver.

POSSIBLE CAUSES
INTERMITTENT CONDITION
FUSED B+ CIRCUIT
INSTRUMENT CLUSTER OPERATION
LEFT TURN INDICATOR DRIVER SHORTED TO VOLTAGE
BCM

TEST	ACTION	APPLICABILITY
1	Turn the ignition on. Monitor the Left Turn Signal Indicator. Operate the Left Turn Signal. Is the Indicator lamp operating correctly? Yes → Go To 2 No → Go To 3	All
2	**WARNING: WHEN THE ENGINE IS OPERATING, DO NOT STAND IN A DIRECT LINE WITH THE FAN. DO NOT PUT YOUR HANDS NEAR THE PULLEYS, BELTS OR FAN. DO NOT WEAR LOOSE CLOTHING.** **NOTE: The conditions that set the DTC are not present at this time. The following list may help in identifying the intermittent condition.** With the engine running at normal operating temperature, monitor the DRB parameters related to the DTC while wiggling the wiring harness. Look for parameter values to change and/or a DTC to set. Refer to any Technical Service Bulletins (TSB) that may apply. Visually inspect the related wiring harness. Look for any chafed, pierced, pinched, or partially broken wires. Visually inspect the related wiring harness connectors. Look for broken, bent, pushed out, or corroded terminals. Were any of the above conditions present? Yes → Repair as necessary Perform BODY VERIFICATION TEST - VER 1. No → Test Complete.	All

LEFT TURN SIGNAL INDICATOR SHORT — Continued

TEST	ACTION	APPLICABILITY
3	Turn the ignition off. Disconnect the Instrument Cluster harness connector. Turn the ignition on. Using a 12-volt test light connected to ground, probe the Fused B+ circuit in the Instrument Cluster harness connector. Does the test light illuminate brightly? Yes → Go To 4 No → Repair the Fused B+ circuit. Perform BODY VERIFICATION TEST - VER 1.	All
4	Turn the ignition off. Disconnect the Instrument Cluster harness connector. Turn the ignition on. Using a 12-volt test light connected to 12-volts, probe the Left Indicator Driver circuit in the Instrument Cluster harness connector. Operate the Multi-Function Switch and turn the Left Indication on. Does the test light flash on and off? Yes → Remove and inspect the bulb. If OK, replace the Instrument Cluster printed circuit board. Perform BODY VERIFICATION TEST - VER 1. No → Go To 5	All
5	Turn the ignition off. Disconnect the Instrument Cluster harness connector. Disconnect the BCM C4 harness connector. Measure the voltage of the Left Turn Indicator Driver circuit at the Instrument Cluster harness connector. Is the voltage above 1.0 volts? Yes → Repair the Left Turn Indicator for a short to voltage. Perform BODY VERIFICATION TEST - VER 1. No → Go To 6	All
6	If there are no possible causes remaining, view repair? Repair Replace the Body Control Module. Perform BODY VERIFICATION TEST - VER 1.	All

Symptom:
LEFT TURN SIGNAL INDICATOR SHORT (EXPORT)

When Monitored and Set Condition:

LEFT TURN SIGNAL INDICATOR SHORT (EXPORT)

When Monitored: With the ignition on.

Set Condition: The BCM detects a short to voltage in the Left Turn Indicator Driver.

POSSIBLE CAUSES
INTERMITTENT CONDITION
FUSED B+ CIRCUIT
MESSAGE CENTER OPERATION
LEFT TURN INDICATOR DRIVER SHORTED TO VOLTAGE
BCM

TEST	ACTION	APPLICABILITY
1	Turn the ignition on. Monitor the Left Turn Signal Indicator. Operate the Left Turn Signal. Is the Indicator lamp operating correctly? Yes → Go To 2 No → Go To 3	All
2	**WARNING: WHEN THE ENGINE IS OPERATING, DO NOT STAND IN A DIRECT LINE WITH THE FAN. DO NOT PUT YOUR HANDS NEAR THE PULLEYS, BELTS OR FAN. DO NOT WEAR LOOSE CLOTHING.** **NOTE: The conditions that set the DTC are not present at this time. The following list may help in identifying the intermittent condition.** With the engine running at normal operating temperature, monitor the DRB parameters related to the DTC while wiggling the wiring harness. Look for parameter values to change and/or a DTC to set. Refer to any Technical Service Bulletins (TSB) that may apply. Visually inspect the related wiring harness. Look for any chafed, pierced, pinched, or partially broken wires. Visually inspect the related wiring harness connectors. Look for broken, bent, pushed out, or corroded terminals. Were any of the above conditions present? Yes → Repair as necessary Perform BODY VERIFICATION TEST - VER 1. No → Test Complete.	All

LEFT TURN SIGNAL INDICATOR SHORT (EXPORT) — Continued

TEST	ACTION	APPLICABILITY
3	Turn the ignition off. Disconnect the Message Center harness connector. Turn the ignition on. Using a 12-volt test light connected to ground, probe the Fused B+ circuit in the Message Center harness connector. Does the test light illuminate brightly? Yes → Go To 4 No → Repair the Fused B+ circuit. Perform BODY VERIFICATION TEST - VER 1.	All
4	Turn the ignition off. Disconnect the Message Center harness connector. Turn the ignition on. Using a 12-volt test light connected to 12-volts, probe the Left Indicator Driver circuit in the Message Center harness connector. Operate the Multi-Function Switch and turn the Left Indication on. Does the test light flash on and off? Yes → Remove and inspect the bulb. If OK, replace the Message Center. Perform BODY VERIFICATION TEST - VER 1. No → Go To 5	All
5	Turn the ignition off. Disconnect the Message Center harness connector. Disconnect the BCM C4 harness connector. Turn the ignition on. Measure the voltage of the Left Turn Indicator Driver circuit at the Message Center harness connector. Is the voltage above 1.0 volts? Yes → Repair the Left Turn Indicator for a short to voltage. Perform BODY VERIFICATION TEST - VER 1. No → Go To 6	All
6	If there are no possible causes remaining, view repair? Repair Replace the Body Control Module. Perform BODY VERIFICATION TEST - VER 1.	All

Symptom:

LOOPBACK FAILURE

POSSIBLE CAUSES
INSTRUMENT CLUSTER

TEST	ACTION	APPLICABILITY
1	Turn the ignition on. With the DRBIII®, record and erase DTC's. Turn the ignition off, wait 15 seconds, then turn the ignition on. With the DRBIII®, read DTCs. Did the DTC reset? Yes → Replace the Instrument Cluster in accordance with the Service Information. Perform BODY VERIFICATION TEST - VER 1. No → Test Complete.	All

Symptom List:

NO ABS BUS MESSAGES RECEIVED
NO BCM BUS MESSAGES RECEIVED
NO FCM BUS MESSAGES RECEIVED
NO ORC BUS MESSAGES RECEIVED
NO TCM BUS MESSAGES RECEIVED

Test Note: All symptoms listed above are diagnosed using the same tests. The title for the tests will be NO ABS BUS MESSAGES RECEIVED.

POSSIBLE CAUSES
NO COMMUNICATION WITH THE ABS, BCM, FCM, ORC, OR TCM MODULE
INTERMITTENT CONDITION
INSTRUMENT CLUSTER

TEST	ACTION	APPLICABILITY
1	Turn the ignition on. With the DRB, attempt to communicate with the ABS, BCM, FCM, ORC, or TCM module. Was the DRB able to I/D or communicate with the module in question? Yes → Go To 2 No → Refer to the Communication category for the related symptom(s). Perform BODY VERIFICATION TEST - VER 1.	All
2	With the DRB, erase DTC's. Turn the ignition on and wait approximately 1 minute. With the DRB, read DTC's. Did this DTC reset? Yes → Replace the Instrument Cluster in accordance with the Service Information. Perform BODY VERIFICATION TEST - VER 1. No → The condition is not present at this time. Monitor DRBIII® parameters while wiggling the related wire harness. Refer to any Technical Service Bulletins (TSB) that may apply. Visually inspect the related wiring harness and connector terminals. Perform BODY VERIFICATION TEST - VER 1.	All

Symptom:
NO PCM BUS MESSAGES RECEIVED

POSSIBLE CAUSES
PCM MESSAGE NOT RECEIVED
NO COMMUNICATION WITH THE PCM
PCI BUS CIRCUIT OPEN
POWERTRAIN CONTROL MODULE

TEST	ACTION	APPLICABILITY
1	Turn the ignition on. With the DRBIII®, enter Instrument Cluster, System Tests then PCM Monitor. Does the DRBIII® display: PCM is active on the BUS? Yes → Erase the DTC, if DTC resets, replace the Instrument Cluster in accordance with the Service Information.. Perform BODY VERIFICATION TEST - VER 1. No → Go To 2	All
2	Turn the ignition on. With the DRBIII®, attempt to communicate with the PCM. Was the DRBIII® able to communicate with the PCM? Yes → Go To 3 No → Refer to the Communication category and perform the appropriate symptom. Perform BODY VERIFICATION TEST - VER 1.	All
3	Turn the ignition off. Disconnect the PCM C2 harness connector. Connect the diagnostic junction port tester #8339 to the diagnostic junction port. **NOTE: Do not connect the tester to the DRBIII®.** Measure the resistance of the PCI Bus circuit between the diagnostic junction port tester and the PCM C2 connector. Is the resistance below 5.0 ohms? Yes → Replace and program the Powertrain Control Module in accordance with the Service Information. Perform BODY VERIFICATION TEST - VER 1. No → Repair the PCI Bus circuit for an open. Perform BODY VERIFICATION TEST - VER 1.	All

Symptom:

PANEL DIMMING OUTPUT SHORT

POSSIBLE CAUSES
INTERMITTENT WIRING AND CONNECTORS
EMIC DIMMING CIRCUIT SHORT TO GROUND
HEADLAMP SWITCH DIMMING CIRCUIT SHORT TO GROUND
HVAC MODULE DIMMING CIRCUIT SHORT TO GROUND
I/P MULTI-FUNCTION SWITCH DIMMING CIRCUIT SHORT TO GROUND
MIRROR SWITCH DIMMING CIRCUIT SHORT TO GROUND
RADIO DIMMING CIRCUIT SHORT TO GROUND
REAR BLOWER CONTROL SWITCH DIMMING CIRCUIT SHORT TO GROUND
EMIC
HEADLAMP SWITCH
I/P MULTI-FUNCTION SWITCH
MIRROR SWITCH
RADIO
REAR BLOWER CONTROL SWITCH
BODY CONTROL MODULE
HVAC MODULE

TEST	ACTION	APPLICABILITY
1	Turn the ignition on. With the DRBIII®, record and erase Body Control Module DTC's. Turn the ignition off, wait 15 seconds, then turn the ignition on. Turn on the Headlamps. With the DRBIII®, read DTCs. Does the DRBIII® display PANEL DIMMING OUTPUT SHORT? Yes → Go To 2 No → Go To 17	All
2	Turn the ignition on. With the DRBIII®, erase Body Control Module DTCs. Turn the ignition off to the lock position. Disconnect the EMIC harness connector. Turn the ignition on. Turn the Headlamps on. With the DRBIII®, read DTCs. Does the DRBIII® display PANEL DIMMING OUTPUT SHORT? Yes → Go To 3 No → Replace the EMIC in accordance with the Service Information. Perform BODY VERIFICATION TEST - VER 1.	All

PANEL DIMMING OUTPUT SHORT — Continued

TEST	ACTION	APPLICABILITY
3	Turn the ignition on. With the DRBIII®, erase Body Control Module DTCs. Turn the ignition off to the lock position. Disconnect the Headlamp Switch harness connector. Turn the ignition on. With the DRBIII®, read DTCs. Does the DRBIII® display PANEL DIMMING OUTPUT SHORT? Yes → Go To 4 No → Replace the Headlamp Switch in accordance with the Service Information. Perform BODY VERIFICATION TEST - VER 1.	All
4	Turn the ignition on. With the DRBIII®, erase Body Control Module DTCs. Turn the ignition off to the lock position. Disconnect the I/P Multi-Function Switch harness connector. Turn the ignition on. Turn the Headlamps on. With the DRBIII®, read DTCs. Does the DRBIII® display PANEL DIMMING OUTPUT SHORT? Yes → Go To 5 No → Replace the I/P Multi-Function Switch in accordance with the Service Information. Perform BODY VERIFICATION TEST - VER 1.	All
5	Turn the ignition on. With the DRBIII®, erase Body Control Module DTCs. Turn the ignition off to the lock position. Disconnect the Mirror Switch harness connector. Turn the ignition on. Turn the Headlamps on. With the DRBIII®, read DTCs. Does the DRBIII® display PANEL DIMMING OUTPUT SHORT? Yes → Go To 6 No → Replace the Mirror Switch in accordance with the Service Information. Perform BODY VERIFICATION TEST - VER 1.	All
6	Turn the ignition on. With the DRBIII®, erase Body Control Module DTCs. Turn the ignition off to the lock position. Disconnect the Rear Blower Control Switch harness connector. Turn the ignition on. Turn the Headlamps on. With the DRBIII®, read DTCs. Does the DRBIII® display PANEL DIMMING OUTPUT SHORT? Yes → Go To 7 No → Replace the Rear Blower Control Switch in accordance with the Service Information. Perform BODY VERIFICATION TEST - VER 1.	All

PANEL DIMMING OUTPUT SHORT — Continued

TEST	ACTION	APPLICABILITY
7	Turn the ignition on. With the DRBIII®, erase Body Control Module DTCs. Turn the ignition off to the lock position. Disconnect the HVAC Module harness connector. Turn the ignition on. Turn the Headlamps on. With the DRBIII®, read DTCs. Does the DRBIII® display PANEL DIMMING OUTPUT SHORT? Yes → Go To 8 No → Replace the HVAC Module in accordance with the Service Information. Perform BODY VERIFICATION TEST - VER 1.	All
8	Turn the ignition on. With the DRBIII®, erase Body Control Module DTCs. Turn the ignition off to the lock position. Disconnect the Radio harness connector. Turn the ignition on. Turn the Headlamps on. With the DRBIII®, read DTCs. Does the DRBIII® display PANEL DIMMING OUTPUT SHORT? Yes → Go To 9 No → Replace the Radio in accordance with the Service Information. Perform BODY VERIFICATION TEST - VER 1.	All
9	Turn the ignition off to the lock position. Disconnect the Body Control Module harness connector. Disconnect the EMIC harness connector. **Note: Check connectors - Clean/repair as necessary.** Measure the resistance between ground and the EMIC Dimming circuit. Is the resistance below 5.0 ohms? Yes → Repair the EMIC Dimming circuit for a short to ground. Perform BODY VERIFICATION TEST - VER 1. No → Go To 10	All
10	Turn the ignition off to the lock position. Disconnect the Body Control Module harness connector. Disconnect the Headlamp Switch harness connector. **Note: Check connectors - Clean/repair as necessary.** Measure the resistance between ground and the Headlamp Switch Dimming circuit. Is the resistance below 5.0 ohms? Yes → Repair the Headlamp Switch Dimming circuit for a short to ground. Perform BODY VERIFICATION TEST - VER 1. No → Go To 11	All

PANEL DIMMING OUTPUT SHORT — Continued

TEST	ACTION	APPLICABILITY
11	Turn the ignition off to the lock position. Disconnect the Body Control Module harness connector. Disconnect the HVAC Module harness connector. **Note: Check connectors - Clean/repair as necessary.** Measure the resistance between ground and the HVAC Module Dimming circuit. Is the resistance below 5.0 ohms? Yes → Repair the HVAC Module Dimming circuit for a short to ground. Perform BODY VERIFICATION TEST - VER 1. No → Go To 12	All
12	Turn the ignition off to the lock position. Disconnect the Body Control Module harness connector. Disconnect the I/P Multi-Function Switch harness connector. **Note: Check connectors - Clean/repair as necessary.** Measure the resistance between ground and the I/P Multi-Function Switch Dimming circuit. Is the resistance below 5.0 ohms? Yes → Repair the I/P Multi-Function Switch Dimming circuit for a short to ground. Perform BODY VERIFICATION TEST - VER 1. No → Go To 13	All
13	Turn the ignition off to the lock position. Disconnect the Body Control Module harness connector. Disconnect the Mirror Switch harness connector. **Note: Check connectors - Clean/repair as necessary.** Measure the resistance between ground and the Mirror Switch Dimming circuit. Is the resistance below 5.0 ohms? Yes → Repair the Mirror Switch Dimming circuit for a short to ground. Perform BODY VERIFICATION TEST - VER 1. No → Go To 14	All
14	Turn the ignition off to the lock position. Disconnect the Body Control Module harness connector. Disconnect the Rear Blower Control Switch harness connector. **Note: Check connectors - Clean/repair as necessary.** Measure the resistance between ground and the Rear Blower Control Switch Dimming circuit. Is the resistance below 5.0 ohms? Yes → Repair the Rear Blower Control Switch Dimming circuit for a short to ground. Perform BODY VERIFICATION TEST - VER 1. No → Go To 15	All

PANEL DIMMING OUTPUT SHORT — Continued

TEST	ACTION	APPLICABILITY
15	Turn the ignition off to the lock position. Disconnect the Body Control Module harness connector. Disconnect the Radio harness connector. **Note: Check connectors - Clean/repair as necessary.** Measure the resistance between ground and the Radio Dimming circuit. Is the resistance below 5.0 ohms? Yes → Repair the Radio Dimming circuit for a short to ground. Perform BODY VERIFICATION TEST - VER 1. No → Go To 16	All
16	If there are no possible causes remaining, view repair. Repair Replace the Body Control Module. Perform BODY VERIFICATION TEST - VER 1.	All
17	The conditions necessary to set this DTC are not present at this time. Using the schematics as a guide, inspect the wiring and connectors specific to this circuit. Wiggle the wiring while checking for shorts and open circuits. Were there any problems found? Yes → Repair as necessary. Perform BODY VERIFICATION TEST - VER 1. No → Test Complete.	All

Symptom:
REAR FOG INDICATOR OUTPUT OPEN

POSSIBLE CAUSES
INTERMITTENT WIRING AND CONNECTORS
REAR FOG LAMP INDICATOR CIRCUIT OPEN
REAR FOG LAMP INDICATOR GROUND CIRCUIT OPEN
REAR FOG LAMP INDICATOR CIRCUIT SHORT TO VOLTAGE
HEADLAMP SWITCH
BODY CONTROL MODULE

TEST	ACTION	APPLICABILITY
1	Turn the ignition on. With the DRBIII®, record and erase Body Control Module DTC's. Turn the ignition off, wait 15 seconds, then turn the ignition on. Turn on the Rear Fog Lamps. With the DRBIII®, read DTCs. Does the DRBIII® display REAR FOG LAMP INDICATOR OPEN? Yes → Go To 2 No → Go To 8	All
2	Turn the ignition off to the lock position. **Note: Check connectors - Clean/repair as necessary.** Ignition on, engine not running. Turn ON the Rear Fog Lamps. Using a 12-volt test light connected to ground, back probe the Rear Fog Lamp Indicator circuit in the Headlamp Switch harness connector. **NOTE: The test light must illuminate brightly. Compare the brightness to that of a direct connection to the battery.** Does the test light illuminate brightly? Yes → Go To 3 No → Go To 6	All
3	Turn the ignition off to the lock position. Disconnect the Body Control Module harness connector. Disconnect the Headlamp Switch harness connector. **Note: Check connectors - Clean/repair as necessary.** Measure the resistance of the Rear Fog Lamp Indicator Ground circuit from the Body Control Module harness connector to the Headlamp Switch harness connector. Is the resistance above 5.0 ohms? Yes → Repair the Rear Fog Lamp Indicator Ground circuit for an open. Perform BODY VERIFICATION TEST - VER 1. No → Go To 4	All

REAR FOG INDICATOR OUTPUT OPEN — Continued

TEST	ACTION	APPLICABILITY
4	Turn the ignition off to the lock position. Disconnect the Body Control Module harness connector. Disconnect the Headlamp Switch harness connector. **Note: Check connectors - Clean/repair as necessary.** Ignition on, engine not running. Measure the voltage of the Rear Fog Lamp Indicator circuit in the Headlamp Switch harness connector. Is the voltage above 0.5 volt? Yes → Repair the Rear Fog Lamp Indicator circuit for a short to voltage. Perform BODY VERIFICATION TEST - VER 1. No → Go To 5	All
5	If there are no possible causes remaining, view repair. Repair Replace the Headlamp Switch. Perform BODY VERIFICATION TEST - VER 1.	All
6	Turn the ignition off to the lock position. Disconnect the Body Control Module harness connector. Disconnect the Headlamp Switch harness connector. **Note: Check connectors - Clean/repair as necessary.** Measure the resistance of the Rear Fog Lamp Indicator circuit from the Body Control Module harness connector to the Headlamp Switch harness connector. Is the resistance above 5.0 ohms? Yes → Repair the Rear Fog Lamp Indicator circuit for an open. Perform BODY VERIFICATION TEST - VER 1. No → Go To 7	All
7	If there are no possible causes remaining, view repair. Repair Replace the Body Control Module. Perform BODY VERIFICATION TEST - VER 1.	All
8	The conditions necessary to set this DTC are not present at this time. Using the schematics as a guide, inspect the wiring and connectors specific to this circuit. Wiggle the wiring while checking for shorts and open circuits. Were there any problems found? Yes → Repair as necessary. Perform BODY VERIFICATION TEST - VER 1. No → Test Complete.	All

Symptom:
REAR FOG INDICATOR OUTPUT SHORT

POSSIBLE CAUSES
INTERMITTENT WIRING AND CONNECTORS
REAR FOG LAMP INDICATOR CIRCUIT SHORT TO GROUND
HEADLAMP SWITCH
BODY CONTROL MODULE

TEST	ACTION	APPLICABILITY
1	Turn the ignition on. With the DRBIII®, record and erase Body Control Module DTC's. Turn the ignition off, wait 15 seconds, then turn the ignition on. With the DRBIII®, read DTCs. Does the DRBIII® display REAR FOG LAMP INDICATOR SHORT TO GROUND? Yes → Go To 2 No → Go To 6	All
2	Turn the ignition off to the lock position. **Note: Check connectors - Clean/repair as necessary.** Ignition on, engine not running. Turn ON the Rear Fog Lamps. Using a 12-volt test light connected to ground, back probe the Rear Fog Lamp Indicator circuit in the Headlamp Switch harness connector. **NOTE: The test light must illuminate brightly. Compare the brightness to that of a direct connection to the battery.** Does the test light illuminate brightly? Yes → Go To 3 No → Go To 4	All
3	If there are no possible causes remaining, view repair. Repair Replace the Headlamp Switch. Perform BODY VERIFICATION TEST - VER 1.	All
4	Turn the ignition off to the lock position. Disconnect the Body Control Module harness connector. Disconnect the Headlamp Switch harness connector. **Note: Check connectors - Clean/repair as necessary.** Measure the resistance between ground and the Rear Fog Lamp Indicator circuit. Is the resistance below 5.0 ohms? Yes → Repair the Rear Fog Lamp Indicator circuit for a short to ground. Perform BODY VERIFICATION TEST - VER 1. No → Go To 5	All
5	If there are no possible causes remaining, view repair. Repair Replace the Body Control Module. Perform BODY VERIFICATION TEST - VER 1.	All

REAR FOG INDICATOR OUTPUT SHORT — Continued

TEST	ACTION	APPLICABILITY
6	The conditions necessary to set this DTC are not present at this time. Using the schematics as a guide, inspect the wiring and connectors specific to this circuit. Wiggle the wiring while checking for shorts and open circuits. Were there any problems found? Yes → Repair as necessary. Perform BODY VERIFICATION TEST - VER 1. No → Test Complete.	All

Symptom:
RIGHT TURN SIGNAL INDICATOR OPEN

When Monitored and Set Condition:

RIGHT TURN SIGNAL INDICATOR OPEN

When Monitored: With the ignition on.

Set Condition: The BCM detects an open in the Right Turn Indicator Driver.

POSSIBLE CAUSES
RIGHT TURN INDICATOR DRIVER SHORTED TO GROUND
INTERMITTENT CONDITION
FUSED B+ CIRCUIT
INSTRUMENT CLUSTER OPERATION
RIGHT TURN INDICATOR DRIVER OPEN
BCM

TEST	ACTION	APPLICABILITY
1	Turn the ignition on. Monitor the Right Turn Signal Indicator. Operate the Right Turn Signal. Is the Indicator lamp operating correctly? Yes → Go To 2 No → Go To 3	All
2	**WARNING: WHEN THE ENGINE IS OPERATING, DO NOT STAND IN A DIRECT LINE WITH THE FAN. DO NOT PUT YOUR HANDS NEAR THE PULLEYS, BELTS OR FAN. DO NOT WEAR LOOSE CLOTHING.** **NOTE: The conditions that set the DTC are not present at this time. The following list may help in identifying the intermittent condition.** With the engine running at normal operating temperature, monitor the DRB parameters related to the DTC while wiggling the wiring harness. Look for parameter values to change and/or a DTC to set. Refer to any Technical Service Bulletins (TSB) that may apply. Visually inspect the related wiring harness. Look for any chafed, pierced, pinched, or partially broken wires. Visually inspect the related wiring harness connectors. Look for broken, bent, pushed out, or corroded terminals. Were any of the above conditions present? Yes → Repair as necessary Perform BODY VERIFICATION TEST - VER 1. No → Test Complete.	All

RIGHT TURN SIGNAL INDICATOR OPEN — Continued

TEST	ACTION	APPLICABILITY
3	Turn the ignition off. Disconnect the Instrument Cluster harness connector. Turn the ignition on. Using a 12-volt test light connected to ground, probe the Fused B+ circuit in the Instrument Cluster harness connector. Does the test light illuminate brightly? Yes → Go To 4 No → Repair the Fused B+ circuit. Perform BODY VERIFICATION TEST - VER 1.	All
4	Turn the ignition off. Disconnect the Instrument Cluster harness connector. Turn the ignition on. Using a 12-volt test light connected to 12-volts, probe the Right Indicator Driver circuit in the Instrument Cluster harness connector. Operate the Multi-Function Switch and turn the Right Indication on. Does the test light flash on and off? Yes → Remove and inspect the Bulb. If OK, replace the Instrument Cluster printed circuit board. Perform BODY VERIFICATION TEST - VER 1. No → Go To 5	All
5	Turn the ignition off. Disconnect the Instrument Cluster harness connector. Disconnect the BCM C4 harness connector. Measure the resistance of the Right Turn Indicator Driver circuit between the BCM harness connector and the Instrument Cluster harness connector. Is the resistance below 5.0 ohms? Yes → Go To 6 No → Repair the Right Turn Indicator for an open. Perform BODY VERIFICATION TEST - VER 1.	All
6	Turn the ignition off. Disconnect the Instrument Cluster harness connector. Disconnect the BCM C4 harness connector. Measure the resistance of the Right Turn Indicator Driver circuit at the Instrument Cluster harness connector to ground. Is the resistance below 5.0 ohms? Yes → Repair the Right Turn Indicator for a short to ground. Perform BODY VERIFICATION TEST - VER 1. No → Go To 7	All
7	If there are no possible causes remaining, view repair? Repair Replace the Body Control Module. Perform BODY VERIFICATION TEST - VER 1.	All

Symptom:
RIGHT TURN SIGNAL INDICATOR OPEN (EXPORT)

When Monitored and Set Condition:

RIGHT TURN SIGNAL INDICATOR OPEN (EXPORT)

When Monitored: With the ignition on.

Set Condition: The BCM detects an open in the Right Turn Indicator Driver.

POSSIBLE CAUSES
INTERMITTENT CONDITION
FUSED B+ CIRCUIT
MESSAGE CENTER OPERATION
RIGHT TURN INDICATOR DRIVER SHORTED TO GROUND
RIGHT TURN INDICATOR DRIVER OPEN
BCM

TEST	ACTION	APPLICABILITY
1	Turn the ignition on. Monitor the Right Turn Signal Indicator. Operate the Right Turn Signal. Is the Indicator lamp operating correctly? Yes → Go To 2 No → Go To 3	All
2	**WARNING: WHEN THE ENGINE IS OPERATING, DO NOT STAND IN A DIRECT LINE WITH THE FAN. DO NOT PUT YOUR HANDS NEAR THE PULLEYS, BELTS OR FAN. DO NOT WEAR LOOSE CLOTHING.** **NOTE: The conditions that set the DTC are not present at this time. The following list may help in identifying the intermittent condition.** With the engine running at normal operating temperature, monitor the DRB parameters related to the DTC while wiggling the wiring harness. Look for parameter values to change and/or a DTC to set. Refer to any Technical Service Bulletins (TSB) that may apply. Visually inspect the related wiring harness. Look for any chafed, pierced, pinched, or partially broken wires. Visually inspect the related wiring harness connectors. Look for broken, bent, pushed out, or corroded terminals. Were any of the above conditions present? Yes → Repair as necessary Perform BODY VERIFICATION TEST - VER 1. No → Test Complete.	All

RIGHT TURN SIGNAL INDICATOR OPEN (EXPORT) — Continued

TEST	ACTION	APPLICABILITY
3	Turn the ignition off. Disconnect the Message Center harness connector. Turn the ignition on. Using a 12-volt test light connected to ground, probe the Fused B+ circuit in the Message Center harness connector. Does the test light illuminate brightly? Yes → Go To 4 No → Repair the Fused B+ circuit. Perform BODY VERIFICATION TEST - VER 1.	All
4	Turn the ignition off. Disconnect the Message Center harness connector. Turn the ignition on. Using a 12-volt test light connected to 12-volts, probe the Right Indicator Driver circuit in the Message Center harness connector. Operate the Multi-Function Switch and turn the Right Indication on. Does the test light flash on and off? Yes → Remove and inspect the Bulb. If OK, replace the Message Center. Perform BODY VERIFICATION TEST - VER 1. No → Go To 5	All
5	Turn the ignition off. Disconnect the Message Center harness connector. Disconnect the BCM C4 harness connector. Measure the resistance of the Right Turn Indicator Driver circuit at the Message Center harness connector to ground. Is the resistance below 5.0 ohms? Yes → Repair the Right Turn Indicator for a short to ground. Perform BODY VERIFICATION TEST - VER 1. No → Go To 6	All
6	Turn the ignition off. Disconnect the Message Center harness connector. Disconnect the BCM C4 harness connector. Measure the resistance of the Right Turn Indicator Driver circuit between the BCM harness connector and the Message Center harness connector. Is the resistance below 5.0 ohms? Yes → Go To 7 No → Repair the Right Turn Indicator for an open. Perform BODY VERIFICATION TEST - VER 1.	All
7	If there are no possible causes remaining, view repair? Repair Replace the Body Control Module. Perform BODY VERIFICATION TEST - VER 1.	All

Symptom:
RIGHT TURN SIGNAL INDICATOR SHORT

When Monitored and Set Condition:

RIGHT TURN SIGNAL INDICATOR SHORT

When Monitored: With the ignition on.

Set Condition: The BCM detects a short to voltage in the Left Turn Indicator Driver.

POSSIBLE CAUSES
INTERMITTENT CONDITION
FUSED B+ CIRCUIT
INSTRUMENT CLUSTER OPERATION
RIGHT TURN INDICATOR DRIVER SHORTED TO VOLTAGE
BCM

TEST	ACTION	APPLICABILITY
1	Turn the ignition on. Monitor the Right Turn Signal Indicator. Operate the Right Turn Signal. Is the Indicator lamp operating correctly? Yes → Go To 2 No → Go To 3	All
2	**WARNING: WHEN THE ENGINE IS OPERATING, DO NOT STAND IN A DIRECT LINE WITH THE FAN. DO NOT PUT YOUR HANDS NEAR THE PULLEYS, BELTS OR FAN. DO NOT WEAR LOOSE CLOTHING.** **NOTE: The conditions that set the DTC are not present at this time. The following list may help in identifying the intermittent condition.** With the engine running at normal operating temperature, monitor the DRB parameters related to the DTC while wiggling the wiring harness. Look for parameter values to change and/or a DTC to set. Refer to any Technical Service Bulletins (TSB) that may apply. Visually inspect the related wiring harness. Look for any chafed, pierced, pinched, or partially broken wires. Visually inspect the related wiring harness connectors. Look for broken, bent, pushed out, or corroded terminals. Were any of the above conditions present? Yes → Repair as necessary Perform BODY VERIFICATION TEST - VER 1. No → Test Complete.	All

RIGHT TURN SIGNAL INDICATOR SHORT — Continued

TEST	ACTION	APPLICABILITY
3	Turn the ignition off. Disconnect the Instrument Cluster harness connector. Turn the ignition on. Using a 12-volt test light connected to ground, probe the Fused B+ circuit in the Instrument Cluster harness connector. Does the test light illuminate brightly? Yes → Go To 4 No → Repair the Fused B+ circuit. Perform BODY VERIFICATION TEST - VER 1.	All
4	Turn the ignition off. Disconnect the Instrument Cluster harness connector. Turn the ignition on. Using a 12-volt test light connected to 12-volts, probe the Right Indicator Driver circuit in the Instrument Cluster harness connector. Operate the Multi-Function Switch and turn the Right Indication on. Does the test light flash on and off? Yes → Remove and inspect the bulb. If OK, replace the Instrument Cluster printed circuit board. Perform BODY VERIFICATION TEST - VER 1. No → Go To 5	All
5	Turn the ignition off. Disconnect the Instrument Cluster harness connector. Disconnect the BCM C4 harness connector. Turn the ignition on. Measure the voltage of the Right Turn Indicator Driver circuit at the Instrument Cluster harness connector. Is the voltage above 1.0 volts? Yes → Repair the Right Turn Indicator for a short to voltage. Perform BODY VERIFICATION TEST - VER 1. No → Go To 6	All
6	If there are no possible causes remaining, view repair? Repair Replace the Body Control Module. Perform BODY VERIFICATION TEST - VER 1.	All

Symptom:
RIGHT TURN SIGNAL INDICATOR SHORT (EXPORT)

When Monitored and Set Condition:

RIGHT TURN SIGNAL INDICATOR SHORT (EXPORT)

When Monitored: With the ignition on.

Set Condition: The BCM detects a short to voltage in the Left Turn Indicator Driver.

POSSIBLE CAUSES
INTERMITTENT CONDITION
FUSED B+ CIRCUIT
MESSAGE CENTER OPERATION
RIGHT TURN INDICATOR DRIVER SHORTED TO VOLTAGE
BCM

TEST	ACTION	APPLICABILITY
1	Turn the ignition on. Monitor the Right Turn Signal Indicator. Operate the Right Turn Signal. Is the Indicator lamp operating correctly? Yes → Go To 2 No → Go To 3	All
2	**WARNING: WHEN THE ENGINE IS OPERATING, DO NOT STAND IN A DIRECT LINE WITH THE FAN. DO NOT PUT YOUR HANDS NEAR THE PULLEYS, BELTS OR FAN. DO NOT WEAR LOOSE CLOTHING.** **NOTE: The conditions that set the DTC are not present at this time. The following list may help in identifying the intermittent condition.** With the engine running at normal operating temperature, monitor the DRB parameters related to the DTC while wiggling the wiring harness. Look for parameter values to change and/or a DTC to set. Refer to any Technical Service Bulletins (TSB) that may apply. Visually inspect the related wiring harness. Look for any chafed, pierced, pinched, or partially broken wires. Visually inspect the related wiring harness connectors. Look for broken, bent, pushed out, or corroded terminals. Were any of the above conditions present? Yes → Repair as necessary Perform BODY VERIFICATION TEST - VER 1. No → Test Complete.	All

RIGHT TURN SIGNAL INDICATOR SHORT (EXPORT) — Continued

TEST	ACTION	APPLICABILITY
3	Turn the ignition off. Disconnect the Message Center harness connector. Turn the ignition on. Using a 12-volt test light connected to ground, probe the Fused B+ circuit in the Message Center harness connector. Does the test light illuminate brightly? Yes → Go To 4 No → Repair the Fused B+ circuit. Perform BODY VERIFICATION TEST - VER 1.	All
4	Turn the ignition off. Disconnect the Message Center harness connector. Turn the ignition on. Using a 12-volt test light connected to 12-volts, probe the Right Indicator Driver circuit in the Message Center harness connector. Operate the Multi-Function Switch and turn the Right Indication on. Does the test light flash on and off? Yes → Remove and inspect the bulb. If OK, replace the Message Center. Perform BODY VERIFICATION TEST - VER 1. No → Go To 5	All
5	Turn the ignition off. Disconnect the Message Center harness connector. Disconnect the BCM C4 harness connector. Turn the ignition on. Measure the voltage of the Right Turn Indicator Driver circuit at the Message Center harness connector. Is the voltage above 1.0 volts? Yes → Repair the Right Turn Indicator for a short to voltage. Perform BODY VERIFICATION TEST - VER 1. No → Go To 6	All
6	If there are no possible causes remaining, view repair? Repair Replace the Body Control Module. Perform BODY VERIFICATION TEST - VER 1.	All

Symptom:
TCM MESSAGE MISMATCH

POSSIBLE CAUSES
TCM COMMUNICATION FAILURE
INSTRUMENT CLUSTER

TEST	ACTION	APPLICABILITY
1	**NOTE: Diagnose and repair any TCM DTCs before proceeding with this test.** Turn the ignition on. With the DRBIII®, ensure PCI Bus communications with the TCM. Is the TCM communicating on the PCI Bus? Yes → Replace the Instrument Cluster in accordance with the Service Information. Perform BODY VERIFICATION TEST - VER 1. No → Refer to COMMUNICATION category for the related symptom. Perform BODY VERIFICATION TEST - VER 1.	All

Symptom:
TRACTION SWITCH INPUT STUCK - BCM

When Monitored and Set Condition:

TRACTION SWITCH INPUT STUCK - BCM

When Monitored: When BCM is awake.

Set Condition: The BCM detects Traction Control Switch Sense circuit closed for over 30 seconds.

POSSIBLE CAUSES
TRACTION CONTROL SWITCH
TRACTION CONTROL SWITCH SENSE CIRCUIT SHORT TO GROUND
BODY CONTROL MODULE

TEST	ACTION	APPLICABILITY
1	Turn the ignition off. Disconnect the Traction Control Switch harness connector. Turn the ignition on. With the DRBIII®, read DTCs. Does the DRBIII® display Traction Switch Input Stuck? Yes → Go To 2 No → Replace the Traction Control Switch in accordance with the service information. Perform BODY VERIFICATION TEST - VER 1.	All
2	Turn the ignition off. Disconnect the BCM C4 harness connector. Disconnect the Traction Control Switch harness connector. Measure the resistance between ground and the Traction Control Switch circuit. Is the resistance below 5.0 ohms. Yes → Repair the Traction Control Switch Sense circuit for a short to ground. Perform BODY VERIFICATION TEST - VER 1. No → Replace and program the Body Control Module in accordance with the Service Information. Perform BODY VERIFICATION TEST - VER 1.	All

Symptom:
*ANY PCI BUS INDICATOR INOPERATIVE

POSSIBLE CAUSES
NO RESPONSE - PCI BUS
NO RESPONSE - INSTRUMENT CLUSTER
NO RESPONSE - ECM / PCM
INDICATOR INOPERATIVE
INSTRUMENT CLUSTER

TEST	ACTION	APPLICABILITY
1	Turn the ignition on. With the DRBIII®, select J1850 Module Scan. Does the DRBIII® display MIC PRESENT on the BUS? Yes → Go To 2 No → Refer to the COMMUNICATION category and perform the appropriate symptom. Perform BODY VERIFICATION TEST - VER 1.	All
2	Turn the ignition on. With the DRBIII®, Select Body, MIC, the MODULE DISPLAY. Does the DRBIII® display NO RESPONSE from MIC? Yes → Refer to the symptom list for problems related to *NO RESPONSE FROM THE INSTRUMENT CLUSTER. Perform BODY VERIFICATION TEST - VER 1. No → Go To 3	All
3	Turn the ignition on. With the DRBIII®, select Body, MIC, SYSTEM TESTS, PCM MONITOR. Does the DRBIII® display PCM INACTIVE on the BUS? Yes → Refer to the symptom list for problems related to *NO RESPONSE FROM THE POWERTRAIN CONTROL MODULE (Gas) / or *NO RESPONSE FROM THE ENGINE CONTROL MODULE (Diesel) Perform BODY VERIFICATION TEST - VER 1. No → Go To 4	All
4	**NOTE: Diagnose and repair any PCM (gas) or ECM (diesel) DTCs before proceeding with this test.** Perform the Instrument Cluster diagnostic Self Test. Observe the indicator in question during the Self Test. Did the indicator illuminate? Yes → Refer to the appropriate Servic Information category to diagnose the related system. Perform BODY VERIFICATION TEST - VER 1. No → Replace the Instrument Cluster in accordance with the Service Information. Perform BODY VERIFICATION TEST - VER 1.	All

Symptom:
*SEAT BELT INDICATOR ALWAYS ON

POSSIBLE CAUSES
ACM SEAT BELT INDICATOR COMMAND PRESENT
INSTRUMENT CLUSTER

TEST	ACTION	APPLICABILITY
1	**NOTE: Ensure that the Driver seat belt buckle is not damaged and is buckled.** With the DRBIII®, select Airbag, then Monitors. Does the DRBIII® display ″S Belt Lamp On by ACM″? Yes → Refer to Airbag for the related symptom(s). Perform BODY VERIFICATION TEST - VER 1. No → Replace the Instrument Cluster in accordance with the Service Information. Perform BODY VERIFICATION TEST - VER 1.	All

Symptom:

DOME SWITCH INPUT OPEN

POSSIBLE CAUSES
INTERMITTENT CONDITION
PANEL LAMPS DIMMER SIGNAL CIRCUIT OPEN
BODY CONTROL MODULE
HEADLAMP SWITCH

TEST	ACTION	APPLICABILITY
1	Turn the ignition on. With the DRBIII®, clear all BCM DTC's. Turn the Dome Lamps on. With the DRBIII®, read the DTC information. Does the DRBIII® display: Dome Switch Input Open? Yes → Go To 2 No → The condition that caused the symptom is currently not present. Inspect the related wiring for a possible intermittent condition. Look for any chafed, pierced, pinched, or partially broken wires. Perform BODY VERIFICATION TEST - VER 1.	All
2	Turn the ignition off. Disconnect the applicable Body Control Module harness connector. Disconnect the Headlamp Switch harness connector. Measure the resistance of the Panel Lamps Dimmer Signal Circuit. Is the resistance below 5.0 ohms? Yes → Go To 3 No → Repair the Panel Lamps Dimmer Signal Circuit for an open condition. Perform BODY VERIFICATION TEST - VER 1.	All
3	Turn the ignition off. Disconnect the applicable Body Control Module harness connector. Measure the voltage of the Panel Lamps Dimmer Signal circuit. Is the voltage below 4.8 volts? Yes → Replace the Body Control Module. Perform BODY VERIFICATION TEST - VER 1. No → Replace the Headlamp Switch. Perform BODY VERIFICATION TEST - VER 1.	All

Symptom:
DOME SWITCH INPUT SHORT

POSSIBLE CAUSES
INTERMITTENT CONDITION
PANEL LAMPS DIMMER SIGNAL CIRCUIT SHORT TO GROUND
HEADLAMP SWITCH
BODY CONTROL MODULE

TEST	ACTION	APPLICABILITY
1	Turn the ignition on. With the DRBIII®, clear all BCM DTC's. Turn the Dome Lamps on. With the DRBIII®, read the DTC information. Does the DRBIII® display: Dome Switch Input Short? Yes → Go To 2 No → The condition that caused the symptom is currently not present. Inspect the related wiring for a possible intermittent condition. Look for any chafed, pierced, pinched, or partially broken wires. Perform BODY VERIFICATION TEST - VER 1.	All
2	Turn the ignition off. Disconnect the Headlamp Switch harness connector. Disconnect the applicable Body Control Module connector. Measure the resistance of the Panel Lamps Dimmer Signal Circuit to ground. Is the resistance below 1000 ohms? Yes → Repair the Panel Lamps Dimmer Signal Circuit for a short to ground. Perform BODY VERIFICATION TEST - VER 1. No → Go To 3	All
3	Turn the ignition off. Disconnect the Headlamp Switch harness connector. Measure the resistance of the Panel Lamps Dimmer Signal Circuit and the Headlamp Switch MUX Return Circuit to ground. Is the resistance below 1000 ohms? Yes → Replace the Headlamp Switch. Perform BODY VERIFICATION TEST - VER 1. No → Replace the Body Control Module. Perform BODY VERIFICATION TEST - VER 1.	All

Symptom:
DOOR/LIFTGATE LAMP OUTPUT SHORT

POSSIBLE CAUSES
INTERMITTENT CONDITION
COURTESY LAMPS DRIVER - LIFTGATE CIRCUIT SHORT TO GROUND
COURTESY LAMPS DRIVER - DOOR CIRCUIT SHORT TO GROUND
BODY CONTROL MODULE

TEST	ACTION	APPLICABILITY
1	Turn the ignition on. With the DRBIII®, clear all BCM DTC's. With the DRBIII®, read the DTC information. Does the DRBIII® read: Door/Liftgate Lamp Output Short? Yes → Go To 2 No → The condition that caused the symptom is currently not present. Inspect the related wiring for a possible intermittent condition. Look for any chafed, pierced, pinched, or partially broken wires. Perform BODY VERIFICATION TEST - VER 1.	All
2	Turn the ignition off. Disconnect the Liftgate Door Harness. Open the Liftgate. Measure the resistance of the Liftgate Output circuit. Is the resistance below 5.0 ohms? Yes → Repair the Courtesy Lamps Driver - Liftgate Circuit for a short condition. Perform BODY VERIFICATION TEST - VER 1. No → Go To 3	All
3	Disconnect the BCM C3 harness connector. Disconnect the Drivers and Front Passenger door harness connectors one at a time. Measure the resistance of each Door Lamp Driver circuit to ground. Is the resistance below 5.0 ohms? Yes → Replace the Body Control Module. Perform BODY VERIFICATION TEST - VER 1. No → Repair the Applicable Courtesy Lamps Driver - Door Circuit for a short to ground. Perform BODY VERIFICATION TEST - VER 1.	All

Symptom:
FRONT COURTESY LAMPS OUTPUT SHORT

When Monitored and Set Condition:

FRONT COURTESY LAMPS OUTPUT SHORT

When Monitored: Anytime the BCM is active.

Set Condition: When the voltage of the Headlamp Switch MUX Return circuit falls below 5.0 volts for 10 seconds.

POSSIBLE CAUSES
INTERMITTENT CONDITION
FRONT COURTESY LAMP OUTPUT CIRCUIT SHORT
BODY CONTROL MODULE
OVERHEAD CONSOLE

TEST	ACTION	APPLICABILITY
1	Turn the ignition on. With the DRBIII®, clear all BCM DTC's. Turn the courtesy lamps on. With the DRBIII®, read the DTC information. Does the DRBIII® read: Front Courtesy Lamps Output Short? Yes → Go To 2 No → The condition that caused the symptom is currently not present. Inspect the related wiring for a possible intermittent condition. Look for any chafed, pierced, pinched, or partially broken wires. Perform BODY VERIFICATION TEST - VER 1.	All
2	Turn the ignition off. Disconnect the Headlamp Switch harness connector. Disconnect the applicable Body Control Module harness connector. Measure the resistance of the Front Courtesy Lamp Output circuit. Is the resistance below 5.0 ohms? Yes → Repair the Front Courtesy Lamp Output circuit for a short condition. Perform BODY VERIFICATION TEST - VER 1. No → Go To 3	All
3	Turn the ignition off. Disconnect the Body Control Module C2 harness connector. Measure the resistance of the Front Courtesy Lamp Output circuit. Is the resistance below 5.0 ohms? Yes → Replace the Overhead Console. Perform BODY VERIFICATION TEST - VER 1. No → Replace the Body Control Module. Perform BODY VERIFICATION TEST - VER 1.	All

Symptom:
READING LAMP OUTPUT SHORT

When Monitored and Set Condition:

READING LAMP OUTPUT SHORT

When Monitored: Anytime the Body Control Module is active.

Set Condition: When output voltage status is LOW.

POSSIBLE CAUSES
INTERMITTENT CONDITION
READING LAMPS DRIVER CIRCUIT SHORT
GLOVE BOX LAMP CIRCUIT SHORT TO GROUND
BODY CONTROL MODULE

TEST	ACTION	APPLICABILITY
1	Turn the ignition on. With the DRBIII®, clear all BCM DTC's. Turn the Reading Lamps on. With the DRBIII®, read the DTC information. Does the DRBIII® display: Reading Lamp Output Short? Yes → Go To 2 No → The condition that caused the symptom is currently not present. Inspect the related wiring for a possible intermittent condition. Look for any chafed, pierced, pinched, or partially broken wires. Perform BODY VERIFICATION TEST - VER 1.	All
2	Turn the ignition off. Disconnect the BCM C2 harness connector. Turn the reading lamps on. Measure the resistance of the Reading Lamps circuit. Is the resistance below 5.0 ohms? Yes → Go To 3 No → Repair the Reading Lamps Driver Circuit for a short condition. Perform BODY VERIFICATION TEST - VER 1.	All
3	Turn the ignition off. Disconnect the Body Control Module C2 and C4 harness connectors. Measure the resistance of the Glove Box and Reading Lamps Circuits. Is the resistance below 5.0 ohms in any of the circuits? Yes → Repair the Glove Box Lamp Driver/ Reading Lamps Circuit for a short to ground. Perform BODY VERIFICATION TEST - VER 1. No → Replace the Body Control Module. Perform BODY VERIFICATION TEST - VER 1.	All

Symptom:
BCM MESSAGES NOT RECEIVED

When Monitored and Set Condition:

BCM MESSAGES NOT RECEIVED

When Monitored: Continuously when the PCI bus is active.

Set Condition: If the Memory Seat/Mirror/Adjustable Pedals Module does not receive Bus messages from the BCM. Code will remain for 50 ignition cycles.

POSSIBLE CAUSES
BCM RESPONSE
STORED CODE/PCI BUS COMMUNICATION PROBLEMS
MEMORY SEAT/MIRROR/ADJUSTABLE PEDALS MODULE
INTERMITTENT PROBLEM

TEST	ACTION	APPLICABILITY
1	Turn ignition on. With the DRBIII® select Body Control Module. Is there a response from the Body Control Module? Yes → Go To 2 No → Refer to symptom *NO RESPONSE FROM BODY CONTROL MODULE in the COMMUNICATION category Perform MEMORY SYSTEM VERIFICATION TEST - VER 1.	All
2	With the DRBIII®, erase the DTC from Memory Seat/Mirror/Adjustable Pedals Module. Turn the ignition switch to the Off position then start the engine and let run for one minute. Now be sure that there is still communication with the Body Control module, if not repair as necessary. With the DRBIII® check for the same DTC to reset in the MSMAPM. Did the same DTC reset? Yes → Go To 3 No → Test complete. Perform MEMORY SYSTEM VERIFICATION TEST - VER 1.	All
3	**NOTE: Visually inspect the related wiring harness including the PCI bus wire. Look for any chafed, pierced, pinched, or partially broken wires.** **Note: Visually inspect the related wiring harness connectors. Look for broken, bent, pushed out, or corroded terminals.** **Note: Refer to any technical service bulletins that may apply.** Were any problems found? No → Replace the Memory Seat/Mirror/Adjustable Pedals Module. Perform MEMORY SYSTEM VERIFICATION TEST - VER 1. Yes → Repair as necessary. Perform MEMORY SYSTEM VERIFICATION TEST - VER 1.	All

Symptom:
CHARGING VOLTAGE HIGH MESSAGE

When Monitored and Set Condition:

CHARGING VOLTAGE HIGH MESSAGE

When Monitored: During cranking or with the engine running.

Set Condition: When the Memory Seat/Mirror/Adjustable Pedals Module detects battery voltage above 15.5 volts. Code will remain for 50 ignition cycles.

POSSIBLE CAUSES
PCM TROUBLE CODES
STORED CODE
MEMORY SEAT/MIRROR/ADJUSTABLE PEDALS MODULE
INTERMITTENT PROBLEM

TEST	ACTION	APPLICABILITY
1	Turn ignition on. With the DRBIII® read Engine DTCs. Are there any Charging system DTC's present in the Power Control Module? Yes → Refer to the Driveabilty category Perform MEMORY SYSTEM VERIFICATION TEST - VER 1. No → Go To 2	All
2	With the DRBIII®, erase the DTC from Memory Seat/Mirror/Adjustable Pedals Module. Turn the ignition switch to the Off position then start the engine and let run for one minute. With the DRBIII® check for the same DTC to reset in the MSMAPM. Did the same DTC reset? Yes → Go To 3 No → Test complete. Perform MEMORY SYSTEM VERIFICATION TEST - VER 1.	All
3	**Note: Visually inspect the related wiring harness. Look for any chafed, pierced, pinched, or partially broken wires.** **Note: Visually inspect the related wiring harness connectors. Look for broken, bent, pushed out, or corroded terminals.** **Note: Refer to any technical service bulletins that may apply.** Were any problems found? No → Replace the Memory Seat/Mirror/Adjustable Pedals Module. Perform MEMORY SYSTEM VERIFICATION TEST - VER 1. Yes → Repair as necessary. Perform MEMORY SYSTEM VERIFICATION TEST - VER 1.	All

Symptom:
CHARGING VOLTAGE LOW MESSAGE

When Monitored and Set Condition:

CHARGING VOLTAGE LOW MESSAGE

When Monitored: During cranking or with the engine running.

Set Condition: When the Memory Seat/Mirror/Adjustable Pedals Module detects battery voltage below 9 volts. Code will remain for 50 ignition cycles.

POSSIBLE CAUSES
PCM TROUBLE CODES
STORED CODE
MEMORY SEAT/MIRROR/ADJUSTABLE PEDALS MODULE
FUSED B(+)

TEST	ACTION	APPLICABILITY
1	Turn ignition on. With the DRBIII® read Engine DTCs. Are there any charging system DTC's present Power Control Module? Yes → Refer to Driveability category. Perform MEMORY SYSTEM VERIFICATION TEST - VER 1. No → Go To 2	All
2	With the DRBIII®, erase the DTC from Memory Seat/Mirror/Adjustable Pedals Module. Turn the ignition switch to the Off position then start the engine and let run for one minute. With the DRBIII® check for the same DTC to reset in the MSMAPM. Did the same DTC reset? Yes → Go To 3 No → Test complete. Perform MEMORY SYSTEM VERIFICATION TEST - VER 1.	All
3	Disconnect the MSMAPM C4 connector. Check connectors - Clean/repair as necessary. Start the engine and let idle. Using a 12-volt test light connected to ground, check the Fused B+ circuit. The test light must illuminate brightly. Compare the brightness to that of a direct connection to the battery. Were any problems found? No → Replace the Memory Seat/Mirror/Adjustable Pedals Module. Perform MEMORY SYSTEM VERIFICATION TEST - VER 1. Yes → Repair as necessary. Perform MEMORY SYSTEM VERIFICATION TEST - VER 1.	All

Symptom:
DRIVER FRONT RISER DOWN SWITCH STUCK

When Monitored and Set Condition:

DRIVER FRONT RISER DOWN SWITCH STUCK

When Monitored: Continuously when the PCI bus is active.

Set Condition: If the seat switch is active for 30 seconds, this code will set and the Memory Seat/Mirror/Adjustable Pedals Module will ignore the input until the state has changed. Three seconds after the stuck condition is removed, the seat will resume to normal operation. Code will remain for 50 ignition cycles.

POSSIBLE CAUSES
STORED DIAGNOSTIC TROUBLE CODE
DRIVER POWER SEAT SWITCH
DRIVER SEAT FRONT DOWN SWITCH SENSE WIRE SHORT TO VOLTAGE
MEMORY SEAT/MIRROR/ADJUSTABLE PEDALS MODULE

TEST	ACTION	APPLICABILITY
1	With the DRBIII®, erase the DTC from Memory Seat/Mirror/Adjustable Pedals Module. Operate the driver's power seat and memory system. Turn the ignition switch to the Off position then start the engine and let run for one minute. With the DRBIII® check for the same DTC to reset in the MSMAPM. Did the same DTC reset? Yes → Go To 2 No → Using the wiring diagram/schematic as a guide, inspect the wiring and connectors for an intermittent condition. Perform MEMORY SYSTEM VERIFICATION TEST - VER 1.	All
2	Disconnect the Driver Power Seat Switch connector. Measure the voltage of the Driver Seat Front Down Switch Sense circuit. Is there any voltage present? Yes → Go To 3 No → Replace the Driver Power Seat Switch. Perform MEMORY SYSTEM VERIFICATION TEST - VER 1.	All

DRIVER FRONT RISER DOWN SWITCH STUCK — Continued

TEST	ACTION	APPLICABILITY
3	Disconnect the Driver Power Seat Switch connector. Disconnect the Memory Seat/Mirror/Adjustable Pedals Module C2 connector. Turn the ignition on. Measure the voltage of the Driver Seat Front Down Switch Sense circuit to ground. Is there any voltage present? Yes → Repair the Driver Seat Front Down Switch Sense wire for a short to voltage. Perform MEMORY SYSTEM VERIFICATION TEST - VER 1. No → Go To 4	All
4	If there are no possible causes remaining, view repair. Repair Replace the Memory Seat/Mirror/Adjustable Pedals Module. Perform MEMORY SYSTEM VERIFICATION TEST - VER 1.	All

Symptom:
DRIVER FRONT RISER SENSOR OUT OF RANGE HIGH

When Monitored and Set Condition:

DRIVER FRONT RISER SENSOR OUT OF RANGE HIGH

When Monitored: Continuously when the PCI bus is active.

Set Condition: This condition is immediately set when the seat motor potentiometer feeds a value higher than the Memory Seat/Mirror/Adjustable Pedals Module has stored in EEPROM. Code will remain for 50 ignition cycles.

POSSIBLE CAUSES
MEMORY SEAT/MIRROR/ADJUSTABLE PEDALS MODULE SENSOR GROUND OPEN
SEAT 5 VOLT SUPPLY WIRE SHORTED TO FRONT RISER POSITION SIGNAL CIRCUIT
SEAT POSITION SENSOR GROUND WIRE OPEN
5 VOLT SUPPLY SHORTED HIGH
CHECK VOLTAGE ON FRONT RISER POSITION SIGNAL CIRCUIT
FRONT RISER SENSOR HIGH
FRONT RISER SENSOR SHORT TO MOTOR
MEMORY SEAT/MIRROR/ADJUSTABLE PEDALS MODULE FRONT RISER HIGH
STORED DIAGNOSTIC TROUBLE CODE

TEST	ACTION	APPLICABILITY
1	With the DRBIII®, erase the DTC from Memory Seat/Mirror/Adjustable Pedals Module. Operate the driver's power seat and memory system. Turn the ignition switch to the Off position then start the engine and let run for one minute. With the DRBIII® check for the same DTC to reset in the MSMAPM. Did the same DTC reset? Yes → Go To 2 No → Using the wiring diagram/schematic as a guide, inspect the wiring and connectors for an intermittent condition. Perform MEMORY SYSTEM VERIFICATION TEST - VER 1.	All
2	Turn ignition off. Disconnect the Driver Power Seat Front Riser Position Sensor connector. Measure the resistance of the Seat Position Sensor Ground circuit at the Driver Power Seat Front Riser Position Sensor connector. Is the resistance below 5.0 ohms? Yes → Go To 3 No → Go To 9	All

DRIVER FRONT RISER SENSOR OUT OF RANGE HIGH — Continued

TEST	ACTION	APPLICABILITY
3	Disconnect the Driver Power Seat Front Riser Position Sensor connector. Measure the voltage between Seat Sensor 5 volt supply circuit and ground. Turn ignition on. Is the voltage above 5.5 volts? Yes → Repair the Seat Sensor 5 Volt Supply circuit for a short to battery. Perform MEMORY SYSTEM VERIFICATION TEST - VER 1. No → Go To 4	All
4	Ensure all seat and sensor connectors are connected and front riser motor is operational. With the DRBIII® in Sensors monitor the Front Riser Position Sensor while operating the front riser motor to both limits. Did the voltage ever go above 7.0 volts only when the motor was in operation? Yes → Replace the Seat Track Assembly. Perform MEMORY SYSTEM VERIFICATION TEST - VER 1. No → Go To 5	All
5	Turn ignition off. Disconnect the Driver Power Seat Front Riser Position Sensor Connector. Disconnect the Memory Seat/Mirror/Adjustable Pedals Module C2 Connector. Turn ignition on. Measure the voltage between Front Riser Position Signal circuit and ground. Is the voltage above 0.2 volts? Yes → Repair the Front Riser Position Signal circuit for a short to voltage. Perform MEMORY SYSTEM VERIFICATION TEST - VER 1. No → Go To 6	All
6	Turn ignition off. Disconnect the Driver Power Seat Front Riser Position Sensor Connector. Ensure the Memory Seat/Mirror/Adjustable Pedals Module is fully connected before proceeding. Turn ignition on. With the DRBIII® in Sensors read the Front Riser Position Sensor voltage. Is the voltage above 0.2 volts? Yes → Go To 7 No → Replace the Seat Track Assembly. Perform MEMORY SYSTEM VERIFICATION TEST - VER 1.	All
7	Turn ignition off. Disconnect the Memory Seat/Mirror/Adjustable Pedals Module C2 connector. Disconnect the Driver Power Seat Front Riser Sensor connector. Measure the resistance between the Seat Sensor 5 volt supply to the Front Riser Position Signal circuit. Is the resistance below 100.0 ohms? Yes → Repair the Seat 5 Volt Supply circuit for a short to the Front Riser Position Signal circuit. Perform MEMORY SYSTEM VERIFICATION TEST - VER 1. No → Go To 8	All

DRIVER FRONT RISER SENSOR OUT OF RANGE HIGH — Continued

TEST	ACTION	APPLICABILITY
8	If there are no possible causes remaining, view repair. Repair Replace the Memory Seat/Mirror/Adjustable Pedals Module. Perform MEMORY SYSTEM VERIFICATION TEST - VER 1.	All
9	Turn ignition off. Disconnect the Memory Seat/Mirror/Adjustable Pedals Module C2 connector. Disconnect the Driver Power Seat Front Riser Position Sensor connector. Measure the resistance of the Seat Position Sensor Ground wire between the Driver Power Seat Front Riser Position Sensor connector and the MSMAPM C2 connector. Is the resistance below 5.0 ohms? Yes → Replace the Memory Seat/Mirror/Adjustable Pedals Module. Perform MEMORY SYSTEM VERIFICATION TEST - VER 1. No → Repair the open Seat Position Sensor Ground wire. Perform MEMORY SYSTEM VERIFICATION TEST - VER 1.	All

Symptom:

DRIVER FRONT RISER SENSOR OUT OF RANGE LOW

When Monitored and Set Condition:

DRIVER FRONT RISER SENSOR OUT OF RANGE LOW

When Monitored: Continuously when the PCI bus is active.

Set Condition: This code is immediately set when the seat motor potentiometer feeds a value lower than the Memory Seat/Mirror/Adjustable Pedals Module has stored in EEPROM. Code will remain for 50 ignition cycles.

POSSIBLE CAUSES
MEMORY SEAT/MIRROR/ADJUSTABLE PEDALS MODULE 5 VOLT SUPPLY
SEAT 5 VOLT SUPPLY WIRE SHORT TO GROUND
SEAT SENSOR 5 VOLT SUPPLY WIRE OPEN
FRONT RISER POSITION SIGNAL CIRCUIT OPEN
FRONT RISER POSITION SIGNAL CIRCUIT SHORT TO GROUND
FRONT RISER SENSOR LOW
MEMORY SEAT/MIRROR/ADJUSTABLE PEDALS MODULE FRONT RISER LOW
STORED DIAGNOSTIC TROUBLE CODE

TEST	ACTION	APPLICABILITY
1	With the DRBIII®, erase the DTC from Memory Seat/Mirror/Adjustable Pedals Module. Operate the driver's power seat and memory system. Turn the ignition switch to the Off position then start the engine and let run for one minute. With the DRBIII® check for the same DTC to reset in the MSMAPM. Did the same DTC reset? Yes → Go To 2 No → Using the wiring diagram/schematic as a guide, inspect the wiring and connectors for an intermittent condition. Perform MEMORY SYSTEM VERIFICATION TEST - VER 1.	All
2	Ensure the Memory Seat/Mirror/Adjustable Pedals Module is fully connected before proceeding. Disconnect the Driver Power Seat Front Riser Position Sensor connector. Turn ignition on. Measure the voltage of the Seat Sensor 5 Volt Supply circuit at front riser connector. Is the voltage above 4.5 volts? Yes → Go To 3 No → Go To 7	All

DRIVER FRONT RISER SENSOR OUT OF RANGE LOW — Continued

TEST	ACTION	APPLICABILITY
3	Turn ignition off. Disconnect the Driver Power Seat Front Riser Position Sensor Connector. Disconnect the Memory Seat/Mirror/Adjustable Pedals Module C2 Connector. Measure the resistance of the Front Riser Position Signal circuit between the front riser sensor and the Memory Seat/Mirror/Adjustable Pedals Module connector. Is the resistance below 5.0 ohms? Yes → Go To 4 No → Repair the Front Riser Position Signal circuit for an open. Perform MEMORY SYSTEM VERIFICATION TEST - VER 1.	All
4	Turn ignition off. Disconnect the Memory Seat/Mirror/Adjustable Pedals Module C2 connector. Disconnect the Driver Power Seat Front Riser Position Sensor connector. Measure the resistance of the Front Riser Position Signal circuit to ground. Is the resistance below 1000 ohms? Yes → Repair the Front Riser Position Signal circuit a short to ground. Perform MEMORY SYSTEM VERIFICATION TEST - VER 1. No → Go To 5	All
5	Turn ignition off. Ensure the Memory Seat/Mirror/Adjustable Pedals Module is fully connected before proceeding. Disconnect the Driver Power Seat Front Riser Position Sensor Connector. Connect a jumper wire between Seat Sensor 5 volt Supply and Front Riser Position Signal circuits. Turn ignition on. With the DRBIII® in Sensors read the Front Riser Position Sensor voltage. Is the voltage above 4.5 volts? Yes → Replace the Seat Track Assembly. Perform MEMORY SYSTEM VERIFICATION TEST - VER 1. No → Go To 6	All
6	If there are no possible causes remaining, view repair. Repair Replace the Memory Seat/Mirror/Adjustable Pedals Module. Perform MEMORY SYSTEM VERIFICATION TEST - VER 1.	All
7	Turn ignition off. Disconnect the Memory Seat/Mirror/Adjustable Pedals Module C2 connector. Measure the resistance of the Seat Sensor 5 volt supply circuit to body ground. Is the resistance below 100.0 ohms? Yes → Repair the Seat 5 Volt Supply circuit for a short to ground. Perform MEMORY SYSTEM VERIFICATION TEST - VER 1. No → Go To 8	All

DRIVER FRONT RISER SENSOR OUT OF RANGE LOW — Continued

TEST	ACTION	APPLICABILITY
8	Turn ignition off. Disconnect the Memory Seat/Mirror/Adjustable Pedals Module C2 connector. Disconnect the Driver Power Seat Front Riser Position Sensor connector. Measure the resistance of the Seat Sensor 5 Volt Supply wire between the Front Riser Sensor connector and the C2 connector. Is the resistance below 5.0 ohms? Yes → Go To 9 No → Repair the Seat Sensor 5 Volt Supply circuit for an open. Perform MEMORY SYSTEM VERIFICATION TEST - VER 1.	All
9	If there are no possible cause remaining, view repair. Repair Replace the Memory Seat/Mirror/Adjustable Pedals Module. Perform MEMORY SYSTEM VERIFICATION TEST - VER 1.	All

Symptom:
DRIVER FRONT RISER UP SWITCH STUCK

When Monitored and Set Condition:

DRIVER FRONT RISER UP SWITCH STUCK

When Monitored: Continuously when the PCI bus is active.

Set Condition: If the seat switch is active for 30 seconds, this code will set and the MSMAPM will ignore the input until the state has changed. Three seconds after the stuck condition is removed, the seat will resume to normal operation. Code will remain for 50 ignition cycles.

POSSIBLE CAUSES
STORED DIAGNOSTIC TROUBLE CODE
DRIVER POWER SEAT SWITCH
DRIVER SEAT FRONT UP SWITCH SENSE WIRE SHORT TO VOLTAGE
MEMORY SEAT/MIRROR/ADJUSTABLE PEDALS MODULE

TEST	ACTION	APPLICABILITY
1	With the DRBIII®, erase the DTC from Memory Seat/Mirror/Adjustable Pedals Module. Operate the driver's power seat and memory system. Turn the ignition switch to the Off position then start the engine and let run for one minute. With the DRBIII® check for the same DTC to reset in the MSMAPM. Did the same DTC reset? Yes → Go To 2 No → Using the wiring diagram/schematic as a guide, inspect the wiring and connectors for an intermittent condition. Perform MEMORY SYSTEM VERIFICATION TEST - VER 1.	All
2	Disconnect the Driver Power Seat Switch connector. Measure the voltage of the Driver Seat Front Up Switch Sense circuit. Is there any voltage present? Yes → Go To 3 No → Replace the Driver Power Seat Switch. Perform MEMORY SYSTEM VERIFICATION TEST - VER 1.	All

DRIVER FRONT RISER UP SWITCH STUCK — Continued

TEST	ACTION	APPLICABILITY
3	Disconnect the Driver Power Seat Switch connector. Disconnect the Memory Seat/Mirror/Adjustable Pedals Module C2 connector. Turn the ignition on. Measure the voltage of the Driver Seat Front Up Switch Sense circuit to ground. Is there any voltage present? Yes → Repair the Driver Seat Front Up Switch Sense wire for a short to voltage. Perform MEMORY SYSTEM VERIFICATION TEST - VER 1. No → Go To 4	All
4	If there are no possible causes remaining, view repair. Repair Replace the Memory Seat/Mirror/Adjustable Pedals Module. Perform MEMORY SYSTEM VERIFICATION TEST - VER 1.	All

Symptom:
DRIVER HORIZONTAL FORWARD SWITCH STUCK

When Monitored and Set Condition:

DRIVER HORIZONTAL FORWARD SWITCH STUCK

When Monitored: Continuously when the PCI bus is active.

Set Condition: If the seat switch is active for 30 seconds, this code will set and the Memory Seat/Mirror/Adjustable Pedals Module will ignore the input until the state has changed. Three seconds after the stuck condition is removed, the seat will resume to normal operation. Code will remain for 50 ignition cycles.

POSSIBLE CAUSES
STORED DIAGNOSTIC TROUBLE CODE
DRIVER POWER SEAT SWITCH
DRIVER HORIZONTAL FORWARD SWITCH SENSE WIRE SHORT TO VOLTAGE
MEMORY SEAT/MIRROR/ADJUSTABLE PEDALS MODULE

TEST	ACTION	APPLICABILITY
1	With the DRBIII®, erase the DTC from Memory Seat/Mirror/Adjustable Pedals Module. Operate the driver's power seat and memory system. Turn the ignition switch to the Off position then start the engine and let run for one minute. With the DRBIII® check for the same DTC to reset in the MSMAPM. Did the same DTC reset? Yes → Go To 2 No → Using the wiring diagram/schematic as a guide, inspect the wiring and connectors for an intermittent condition. Perform MEMORY SYSTEM VERIFICATION TEST - VER 1.	All
2	Disconnect the Driver Power Seat Switch connector. Measure the voltage of the Driver Seat Horizontal Forward Switch Sense circuit. Is there any voltage present? Yes → Go To 3 No → Replace the Driver Power Seat Switch. Perform MEMORY SYSTEM VERIFICATION TEST - VER 1.	All

DRIVER HORIZONTAL FORWARD SWITCH STUCK — Continued

TEST	ACTION	APPLICABILITY
3	Disconnect the Driver Power Seat Switch connector. Disconnect the Memory Seat/Mirror/Adjustable Pedals Module C2 connector. Turn the ignition on. Measure the voltage of the Driver Seat Horizontal Forward Switch Sense circuit to ground.. Is there any voltage present? Yes → Repair the Driver Seat Horizontal Forward Switch Sense wire for a short to voltage. Perform MEMORY SYSTEM VERIFICATION TEST - VER 1. No → Go To 4	All
4	If there are no possible causes remaining, view repair. Repair Replace the Memory Seat/Mirror/Adjustable Pedals Module. Perform MEMORY SYSTEM VERIFICATION TEST - VER 1.	All

Symptom:
DRIVER HORIZONTAL REARWARD SWITCH STUCK

When Monitored and Set Condition:

DRIVER HORIZONTAL REARWARD SWITCH STUCK

When Monitored: Continuously when the PCI bus is active.

Set Condition: If the seat switch is active for 30 seconds, this code will set and the Memory Seat/Mirror/Adjustable Pedals Module will ignore the input until the state has changed. Once the stuck condition is removed, the seat will resume to normal operation. Code will remain for 50 ignition cycles.

POSSIBLE CAUSES
STORED DIAGNOSTIC TROUBLE CODE
DRIVER POWER SEAT SWITCH
DRIVER SEAT HORIZONTAL REARWARD SWITCH SENSE WIRE SHORT TO VOLTAGE
MEMORY SEAT/MIRROR/ADJUSTABLE PEDALS MODULE

TEST	ACTION	APPLICABILITY
1	With the DRBIII®, erase the DTC from Memory Seat/Mirror/Adjustable Pedals Module. Operate the driver's power seat and memory system. Turn the ignition switch to the Off position then start the engine and let run for one minute. With the DRBIII® check for the same DTC to reset in the MSMAPM. Did the same DTC reset? Yes → Go To 2 No → Using the wiring diagram/schematic as a guide, inspect the wiring and connectors for an intermittent condition. Perform MEMORY SYSTEM VERIFICATION TEST - VER 1.	All
2	Disconnect the Driver Power Seat Switch connector. Measure the voltage of the Driver Seat Horizontal Rearward Switch Sense circuit. Is there any voltage present? Yes → Go To 3 No → Replace the Driver Power Seat Switch. Perform MEMORY SYSTEM VERIFICATION TEST - VER 1.	All

DRIVER HORIZONTAL REARWARD SWITCH STUCK — Continued

TEST	ACTION	APPLICABILITY
3	Disconnect the Driver Power Seat Switch connector. Disconnect the Memory Seat/Mirror/Adjustable Pedals Module C2 connector. Turn the ignition on. Measure the voltage of the Driver Seat Horizontal Rearward Switch Sense circuit to ground.. Is there any voltage present? Yes → Repair the Driver Seat Horizontal Rearward Switch Sense wire for a short to voltage. Perform MEMORY SYSTEM VERIFICATION TEST - VER 1. No → Go To 4	All
4	If there are no possible causes remaining, view repair. Repair Replace the Memory Seat/Mirror/Adjustable Pedals Module. Perform MEMORY SYSTEM VERIFICATION TEST - VER 1.	All

Symptom:
DRIVER HORIZONTAL SENSOR OUT OF RANGE HIGH

When Monitored and Set Condition:

DRIVER HORIZONTAL SENSOR OUT OF RANGE HIGH

When Monitored: Continuously when the PCI bus is active.

Set Condition: This condition is immediately set when the seat motor potentiometer feeds a value higher than the Memory Seat/Mirror/Adjustable Pedals Module has stored in EEPROM. Code will remain for 50 ignition cycles.

POSSIBLE CAUSES
MEMORY SEAT/MIRROR/ADJUSTABLE PEDALS MODULE SENSOR GROUND OPEN
SEAT SENSOR GROUND WIRE OPEN
5 VOLT SUPPLY SHORTED HIGH
CHECK VOLTAGE ON HORIZONTAL POSITION SIGNAL CIRCUIT
HORIZONTAL SENSOR HIGH
CHECK HORIZONTAL SENSOR SHORT TO MOTOR
SEAT 5 VOLT SUPPLY WIRE SHORTED TO HORIZONTAL POSITION SIGNAL CIRCUIT
MEMORY SEAT/MIRROR/ADJUSTABLE PEDALS MODULE HORIZONTAL SENSOR HIGH
STORED DIAGNOSTIC TROUBLE CODE

TEST	ACTION	APPLICABILITY
1	With the DRBIII®, erase the DTC from Memory Seat/Mirror/Adjustable Pedals Module. Operate the driver's power seat and memory system. Turn the ignition switch to the Off position then start the engine and let run for one minute. With the DRBIII® check for the same DTC to reset in the MSMAPM. Did the same DTC reset? Yes → Go To 2 No → Using the wiring diagram/schematic as a guide, inspect the wiring and connectors for an intermittent condition. Perform MEMORY SYSTEM VERIFICATION TEST - VER 1.	All
2	Turn ignition off. Disconnect the Driver Power Seat Horizontal Position Sensor connector. Measure the resistance of the Seat Position Sensor Ground circuit at the driver power seat Horizontal connector. Is the resistance below 5.0 ohms? Yes → Go To 3 No → Go To 9	All

DRIVER HORIZONTAL SENSOR OUT OF RANGE HIGH — Continued

TEST	ACTION	APPLICABILITY
3	Disconnect the Driver Power Seat Horizontal Position Sensor connector. Measure the voltage between Seat Sensor 5 volt supply circuit and ground. Turn ignition on. Is the voltage above 5.5 volts? Yes → Repair the Seat Sensor 5 Volt Supply circuit for a short to battery. Perform MEMORY SYSTEM VERIFICATION TEST - VER 1. No → Go To 4	All
4	Turn ignition off. Disconnect the Driver Power Seat Horizontal Position Sensor Connector. Disconnect the Memory Seat/Mirror/Adjustable Pedals Module C2 Connector. Turn ignition on. Measure the voltage between Horizontal Position Signal circuit and ground. Is the voltage above 0.2 volts? Yes → Repair the Horizontal Position Signal circuit for a short to voltage. Perform MEMORY SYSTEM VERIFICATION TEST - VER 1. No → Go To 5	All
5	Turn ignition off. Disconnect the Driver Power Seat Horizontal Position Sensor Connector. Ensure the Memory Seat/Mirror/Adjustable Pedals Module is fully connected before proceeding. Turn ignition on. With the DRBIII® in Sensors read the Horizontal Position Sensor voltage. Is the voltage above 0.2 volts? Yes → Go To 6 No → Replace the Seat Track Assembly. Perform MEMORY SYSTEM VERIFICATION TEST - VER 1.	All
6	Ensure all seat and sensor connectors are connected and Horizontal motor is operational. With the DRBIII® in Sensors monitor the Horizontal Position sensor while operating the seat Horizontal motor to both limits. Did the voltage ever go above 7.0 volts only when the motor was in operation? Yes → Replace the Seat Track Assembly. Perform MEMORY SYSTEM VERIFICATION TEST - VER 1. No → Go To 7	All
7	Turn ignition off. Disconnect the Memory Seat/Mirror/Adjustable Pedals Module C2 connector. Disconnect the Driver Power Seat Horizontal Position Sensor connector. Measure the resistance between the Seat Sensor 5 volt supply to the Horizontal Position Signal circuit. Is the resistance below 100.0 ohms? Yes → Repair the Seat 5 Volt Supply circuit for a short to the Horizontal Position Signal circuit. Perform MEMORY SYSTEM VERIFICATION TEST - VER 1. No → Go To 8	All

DRIVER HORIZONTAL SENSOR OUT OF RANGE HIGH — Continued

TEST	ACTION	APPLICABILITY
8	If there are no possible causes remaining, view repair. Repair Replace the Memory Seat/Mirror/Adjustable Pedals Module. Perform MEMORY SYSTEM VERIFICATION TEST - VER 1.	All
9	Turn ignition off. Disconnect the Memory Seat/Mirror/Adjustable Pedals Module C2 connector. Disconnect the Driver Power Seat Horizontal Position Sensor connector. Measure the resistance of the Seat Position Sensor Ground wire between the Horizontal Sensor connector and the C2 connector. Is the resistance below 5.0 ohms? Yes → Replace the Memory Seat/Mirror/Adjustable Pedals Module. Perform MEMORY SYSTEM VERIFICATION TEST - VER 1. No → Repair the open Seat Sensor Ground wire. Perform MEMORY SYSTEM VERIFICATION TEST - VER 1.	All

Symptom:
DRIVER HORIZONTAL SENSOR OUT OF RANGE LOW

When Monitored and Set Condition:

DRIVER HORIZONTAL SENSOR OUT OF RANGE LOW

When Monitored: Continuously when the PCI bus is active.

Set Condition: This condition is immediately set when the seat motor potentiometer feeds a value lower than the Memory Seat/Mirror/Adjustable Pedals Module has stored in EEPROM. Code will remain for 50 ignition cycles.

POSSIBLE CAUSES
SEAT 5 VOLT SUPPLY WIRE SHORT TO GROUND
SEAT SENSOR 5 VOLT SUPPLY WIRE OPEN
HORIZONTAL POSITION SIGNAL CIRCUIT OPEN
HORIZONTAL POSITION SIGNAL CIRCUIT SHORT TO GROUND
MEMORY SEAT/MIRROR/ADJUSTABLE PEDALS MODULE 5 VOLT SUPPLY
HORIZONTAL SENSOR LOW
MEMORY SEAT/MIRROR/ADJUSTABLE PEDALS MODULE HORIZONTAL LOW
STORED DIAGNOSTIC TROUBLE CODE

TEST	ACTION	APPLICABILITY
1	With the DRBIII®, erase the DTC from Memory Seat/Mirror/Adjustable Pedals Module. Operate the driver's power seat and memory system. Turn the ignition switch to the Off position then start the engine and let run for one minute. With the DRBIII® check for the same DTC to reset in the MSMAPM. Did the same DTC reset? Yes → Go To 2 No → Using the wiring diagram/schematic as a guide, inspect the wiring and connectors for an intermittent condition. Perform MEMORY SYSTEM VERIFICATION TEST - VER 1.	All
2	Ensure the Memory Seat/Mirror/Adjustable Pedals Module is fully connected before proceeding. Disconnect the Driver Power Seat Horizontal Position Sensor connector. Turn ignition on. Measure the voltage of the Seat Sensor 5 Volt Supply circuit at Horizontal sensor connector. Is the voltage above 4.5 volts? Yes → Go To 3 No → Go To 7	All

DRIVER HORIZONTAL SENSOR OUT OF RANGE LOW — Continued

TEST	ACTION	APPLICABILITY
3	Turn ignition off. Disconnect the Driver Power Seat Horizontal Position Sensor Connector. Disconnect the Memory Seat/Mirror/Adjustable Pedals Module C2 Connector. Measure the resistance of the Horizontal Position Signal circuit between the Horizontal sensor and the Memory Seat/Mirror/Adjustable Pedals Module connector. Is the resistance below 5.0 ohms? Yes → Go To 4 No → Repair the Horizontal Position Signal circuit for an open. Perform MEMORY SYSTEM VERIFICATION TEST - VER 1.	All
4	Turn ignition off. Disconnect the Memory Seat/Mirror/Adjustable Pedals Module C2 connector. Disconnect the Driver Power Seat Horizontal Position Sensor connector. Measure the resistance of the Horizontal Position Signal circuit to ground. Is the resistance below 1000 ohms? Yes → Repair the Horizontal Position Signal circuit a short to ground. Perform MEMORY SYSTEM VERIFICATION TEST - VER 1. No → Go To 5	All
5	Turn ignition off. Ensure the Memory Seat/Mirror/Adjustable Pedals Module is fully connected before proceeding. Disconnect the Driver Power Seat Horizontal Position Sensor Connector. Connect a jumper wire between Seat Sensor 5 volt Supply and Horizontal Position Signal circuits. Turn ignition on. With the DRBIII® in Sensors read the Horizontal Position Sensor voltage. Is the voltage above 4.5 volts? Yes → Replace the Seat Track Assembly. Perform MEMORY SYSTEM VERIFICATION TEST - VER 1. No → Go To 6	All
6	If there are no possible causes remaining, view repair. Repair Replace the Memory Seat/Mirror/Adjustable Pedals Module. Perform MEMORY SYSTEM VERIFICATION TEST - VER 1.	All
7	Turn ignition off. Disconnect the Memory Seat/Mirror/Adjustable Pedals Module C2 connector. Measure the resistance of the Seat Sensor 5 volt supply circuit to body ground. Is the resistance below 100.0 ohms? Yes → Repair the Seat 5 Volt Supply circuit for a short to ground. Perform MEMORY SYSTEM VERIFICATION TEST - VER 1. No → Go To 8	All

DRIVER HORIZONTAL SENSOR OUT OF RANGE LOW — Continued

TEST	ACTION	APPLICABILITY
8	Turn ignition off. Disconnect the Memory Seat/Mirror/Adjustable Pedals Module C2 connector. Disconnect the Driver Power Seat Horizontal Position Sensor connector. Measure the resistance of the Seat Sensor 5 Volt Supply wire between the Horizontal Sensor connector and the C2 connector. Is the resistance below 5.0 ohms? Yes → Go To 9 No → Repair the Seat Sensor 5 Volt Supply circuit for an open. Perform MEMORY SYSTEM VERIFICATION TEST - VER 1.	All
9	If there are no possible cause remaining, view repair. Repair Replace the Memory Seat/Mirror/Adjustable Pedals Module. Perform MEMORY SYSTEM VERIFICATION TEST - VER 1.	All

Symptom:
DRIVER MIRROR HORIZONTAL SENSOR OUT OF RANGE HIGH

When Monitored and Set Condition:

DRIVER MIRROR HORIZONTAL SENSOR OUT OF RANGE HIGH

When Monitored: Continuously when the PCI bus is active

Set Condition: This code is set when the mirror sensor feedback to the Memory Seat/Mirror/Adjustable Pedals Module is greater than the mirror out of range high value stored in EEPROM. Code will remain for 50 ignition cycles.

POSSIBLE CAUSES
MIRROR HORIZONTAL POSITION WIRE SHORTED TO VOLTAGE
MIRROR SENSOR GROUND WIRE OPEN
STORED DIAGNOSTIC TROUBLE CODE
MIRROR HORIZONTAL POSITION SIGNAL OPEN
POWER MIRROR
MEMORY SEAT/MIRROR/ADJUSTABLE PEDALS MODULE HORIZONTAL POSITION SIGNAL
MEMORY SEAT/MIRROR/ADJUSTABLE PEDALS MODULE SENSOR GROUND

TEST	ACTION	APPLICABILITY
1	With the DRBIII®, erase the DTC from Memory Seat/Mirror/Adjustable Pedals Module. Operate the memory system. Turn the ignition switch to the Off position then start the engine and let run for one minute. With the DRBIII® check for the same DTC to reset in the MSMAPM. Did the same DTC reset? Yes → Go To 2 No → Using the wiring diagram/schematic as a guide, inspect the wiring and connectors for an intermittent condition. Perform MEMORY SYSTEM VERIFICATION TEST - VER 1.	All
2	Turn the ignition off. Disconnect the Power Mirror connector. Turn the ignition on. Measure the voltage of the Mirror Horizontal Position Signal circuit in the Power Mirror harness connector. Is the voltage between 4.5 and 5.5 volts? Yes → Go To 3 No → Go To 6	All

DRIVER MIRROR HORIZONTAL SENSOR OUT OF RANGE HIGH — Continued

TEST	ACTION	APPLICABILITY
3	Turn the ignition off. Disconnect the Power Mirror connector. Measure the resistance of the Mirror Sensor Ground circuit in the harness connector to ground. Is the resistance below 5.0 ohms? Yes → Go To 4 No → Go To 5	All
4	If there are no possible causes remaining, view repair. Repair Replace the Power Mirror. Perform MEMORY SYSTEM VERIFICATION TEST - VER 1.	All
5	Turn the ignition off. Disconnect the Power Mirror connector. Disconnect the Memory Seat/Mirror/Adjustable Pedals Module C1 connector. Measure the resistance of Mirror Sensor Ground circuit between the Memory Seat/Mirror/Adjustable Pedals Module connector and the Power Mirror connector. Is the resistance below 5.0 ohms? Yes → Replace the Memory Seat/Mirror/Adjustable Pedals Module. Perform MEMORY SYSTEM VERIFICATION TEST - VER 1. No → Repair the open Sensor Ground circuit. Perform MEMORY SYSTEM VERIFICATION TEST - VER 1.	All
6	Turn the ignition off. Disconnect the Power Mirror connector. Disconnect the Memory Seat/Mirror/Adjustable Pedals Module C1 connector. Turn the ignition on. Measure the voltage of Mirror Horizontal Position Signal circuit. Is there any voltage present? Yes → Repair the Mirror Horizontal Position Signal circuit for a short to voltage. Perform MEMORY SYSTEM VERIFICATION TEST - VER 1. No → Go To 7	All
7	Turn the ignition off. Disconnect the Memory Seat/Mirror/Adjustable Pedals Module C1 connector. Disconnect the Power Mirror connector. Measure the resistance of the Mirror Horizontal Position Signal circuit from the Power Mirror connector to the Memory Seat/Mirror/Adjustable Pedals Module connector. Is the resistance below 5.0 ohms? Yes → Replace the Memory Seat/Mirror/Adjustable Pedals Module. Perform MEMORY SYSTEM VERIFICATION TEST - VER 1. No → Repair the open Mirror Horizontal Position Signal wire. Perform MEMORY SYSTEM VERIFICATION TEST - VER 1.	All

Symptom:

DRIVER MIRROR HORIZONTAL SENSOR OUT OF RANGE LOW

When Monitored and Set Condition:

DRIVER MIRROR HORIZONTAL SENSOR OUT OF RANGE LOW

When Monitored: Continuously when the PCI bus is active.

Set Condition: This code is set when the mirror sensor feedback to the MSMAPM is less than the mirror out of range low value stored in EEPROM. Code will remain for 50 ignition cycles.

POSSIBLE CAUSES
MSMAPM HORIZONTAL POSITION LOW
STORED DIAGNOSTIC TROUBLE CODE
MIRROR HORIZONTAL POSITION SIGNAL WIRE SHORT TO GROUND
POWER MIRROR

TEST	ACTION	APPLICABILITY
1	With the DRBIII®, erase the DTC from Memory Seat/Mirror/Adjustable Pedals Module. Operate the memory system. Turn the ignition switch to the Off position then start the engine and let run for one minute. With the DRBIII® check for the same DTC to reset in the MSMAPM. Did the same DTC reset? Yes → Go To 2 No → Using the wiring diagram/schematic as a guide, inspect the wiring and connectors for an intermittent condition. Perform MEMORY SYSTEM VERIFICATION TEST - VER 1.	All
2	Turn the ignition off. Disconnect the Power Mirror connector. Turn the ignition on. Measure the voltage of the Mirror Horizontal Position Signal circuit in the Power Mirror harness connector. Is the voltage between 4.5 and 5.5 volts? Yes → Replace the Power Mirror. Perform MEMORY SYSTEM VERIFICATION TEST - VER 1. No → Go To 3	All

DRIVER MIRROR HORIZONTAL SENSOR OUT OF RANGE LOW — Continued

TEST	ACTION	APPLICABILITY
3	Turn the ignition off. Disconnect the Memory Seat/Mirror/Adjustable Pedals Module C1 connector. Disconnect the Power Mirror connector. Measure the resistance of the Mirror Horizontal Position Signal circuit to ground at the Power Mirror harness side connector. Is the resistance below 1000.0 ohms? Yes → Repair the Mirror Horizontal Position Signal wire for a short to ground. Perform MEMORY SYSTEM VERIFICATION TEST - VER 1. No → Replace the Memory Seat/Mirror/Adjustable Pedals Module. Perform MEMORY SYSTEM VERIFICATION TEST - VER 1.	All

Symptom:
DRIVER MIRROR VERTICAL SENSOR OUT OF RANGE HIGH

When Monitored and Set Condition:

DRIVER MIRROR VERTICAL SENSOR OUT OF RANGE HIGH

When Monitored: Continuously when the PCI bus is active.

Set Condition: This code is set when the mirror sensor feedback to the Memory Seat/Mirror/Adjustable Pedals Module is greater than the mirror out of range high value stored in EEPROM. Code will remain for 50 ignition cycles.

POSSIBLE CAUSES
MIRROR SENSOR GROUND WIRE OPEN
MIRROR VERTICAL POSITION WIRE SHORTED TO VOLTAGE
STORED DIAGNOSTIC TROUBLE CODE
MIRROR VERTICAL POSITION SIGNAL OPEN
POWER MIRROR
MEMORY SEAT/MIRROR/ADJUSTABLE PEDALS MODULE SENSOR GROUND
MEMORY SEAT/MIRROR/ADJUSTABLE PEDALS MODULE VERTICAL POSITION SIGNAL

TEST	ACTION	APPLICABILITY
1	With the DRBIII®, erase the DTC from Memory Seat/Mirror/Adjustable Pedals Module. Operate the memory system. Turn the ignition switch to the Off position then start the engine and let run for one minute. With the DRBIII® check for the same DTC to reset in the MSMAPM. Did the same DTC reset? Yes → Go To 2 No → Using the wiring diagram/schematic as a guide, inspect the wiring and connectors for an intermittent condition. Perform MEMORY SYSTEM VERIFICATION TEST - VER 1.	All
2	Turn the ignition off. Disconnect the Power Mirror connector. Turn the ignition on. Measure the voltage of the Mirror Vertical Position Signal circuit in the Left Power Mirror harness connector. Is the voltage between 4.5 and 5.5 volts? Yes → Go To 3 No → Go To 6	All

DRIVER MIRROR VERTICAL SENSOR OUT OF RANGE HIGH — Continued

TEST	ACTION	APPLICABILITY
3	Turn the ignition off. Disconnect the Power Mirror connector. Measure the resistance of the Mirror Sensor Ground circuit in the harness connector to ground. Is the resistance below 5.0 ohms? Yes → Go To 4 No → Go To 5	All
4	If there are no possible causes remaining, view repair. Repair Replace the Power Mirror. Perform MEMORY SYSTEM VERIFICATION TEST - VER 1.	All
5	Turn the ignition off. Disconnect the Power Mirror connector. Disconnect the Memory Seat/Mirror/Adjustable Pedals Module C1 connector. Measure the resistance of Mirror Sensor Ground circuit between the Memory Seat Mirror Module connector and the Power Mirror connector. Is the resistance below 5.0 ohms? Yes → Replace the Memory Seat/Mirror/Adjustable Pedals Module. Perform MEMORY SYSTEM VERIFICATION TEST - VER 1. No → Repair the open Sensor Ground circuit. Perform MEMORY SYSTEM VERIFICATION TEST - VER 1.	All
6	Turn the ignition off. Disconnect the Power Mirror connector. Disconnect the Memory Seat/Mirror/Adjustable Pedals Module C1 connector. Turn the ignition on. Measure the voltage of Mirror Vertical Position Signal circuit. Is there any voltage present? Yes → Repair the Mirror Vertical Position Signal circuit for a short to voltage. Perform MEMORY SYSTEM VERIFICATION TEST - VER 1. No → Go To 7	All
7	Turn the ignition off. Disconnect the Memory Seat/Mirror/Adjustable Pedals Module C1 connector. Disconnect the Power Mirror connector. Measure the resistance of the Mirror Vertical Position Signal circuit from the power mirror connector to the Memory Seat/Mirror/Adjustable Pedals Module connector. Is the resistance below 5.0 ohms? Yes → Replace the Memory Seat/Mirror/Adjustable Pedals Module. Perform MEMORY SYSTEM VERIFICATION TEST - VER 1. No → Repair the open Mirror Vertical Position Signal wire. Perform MEMORY SYSTEM VERIFICATION TEST - VER 1.	All

Symptom:

DRIVER MIRROR VERTICAL SENSOR OUT OF RANGE LOW

When Monitored and Set Condition:

DRIVER MIRROR VERTICAL SENSOR OUT OF RANGE LOW

When Monitored: Continuously when the PCI bus is active.

Set Condition: This code is set when the mirror sensor feedback to the Memory Seat/Mirror/Adjustable Pedals Module is less than the mirror out of range low value stored in EEPROM. Code will remain for 50 ignition cycles

POSSIBLE CAUSES
MSMAPM VERTICAL POSITION LOW
STORED DIAGNOSTIC TROUBLE CODE
MIRROR VERTICAL POSITION SIGNAL WIRE SHORT TO GROUND
POWER MIRROR

TEST	ACTION	APPLICABILITY
1	With the DRBIII®, erase the DTC from Memory Seat/Mirror/Adjustable Pedals Module. Operate the memory system. Turn the ignition switch to the Off position then start the engine and let run for one minute. With the DRBIII® check for the same DTC to reset in the MSMAPM. Did the same DTC reset? Yes → Go To 2 No → Using the wiring diagram/schematic as a guide, inspect the wiring and connectors for an intermittent condition. Perform MEMORY SYSTEM VERIFICATION TEST - VER 1.	All
2	Turn the ignition off. Disconnect the Power Mirror connector. Turn the ignition on. Measure the voltage of the Mirror Vertical Position Signal circuit in the Power Mirror harness connector. Is the voltage between 4.5 and 5.5 volts? Yes → Replace the Power Mirror. Perform MEMORY SYSTEM VERIFICATION TEST - VER 1. No → Go To 3	All

DRIVER MIRROR VERTICAL SENSOR OUT OF RANGE LOW — Continued

TEST	ACTION	APPLICABILITY
3	Turn the ignition off. Disconnect the Memory Seat/Mirror/Adjustable Pedals Module C1 connector. Disconnect the Power Mirror connector. Measure the resistance of the Mirror Vertical Position Signal circuit to ground at the Power Mirror harness side connector. Is the resistance below 1000.0 ohms? Yes → Repair the Mirror Vertical Position Signal wire for a short to ground. Perform MEMORY SYSTEM VERIFICATION TEST - VER 1. No → Replace the Memory Seat/Mirror/Adjustable Pedals Module. Perform MEMORY SYSTEM VERIFICATION TEST - VER 1.	All

Symptom:
DRIVER REAR RISER DOWN SWITCH STUCK

When Monitored and Set Condition:

DRIVER REAR RISER DOWN SWITCH STUCK

When Monitored: Continuously when the PCI bus is active.

Set Condition: If the seat switch is active for 30 seconds, this code will set and the Memory Seat/Mirror/Adjustable Pedals Module will ignore the input until the state has changed. Three seconds after the stuck condition is removed, the seat will resume to normal operation. Code will remain for 50 ignition cycles.

POSSIBLE CAUSES
STORED DIAGNOSTIC TROUBLE CODE
DRIVER POWER SEAT SWITCH
DRIVER SEAT REAR DOWN SWITCH SENSE WIRE SHORT TO VOLTAGE
MEMORY SEAT/MIRROR/ADJUSTABLE PEDALS MODULE

TEST	ACTION	APPLICABILITY
1	With the DRBIII®, erase the DTC from Memory Seat/Mirror/Adjustable Pedals Module. Operate the driver's power seat and memory system. Turn the ignition switch to the Off position then start the engine and let run for one minute. With the DRBIII® check for the same DTC to reset in the MSMAPM. Did the same DTC reset? Yes → Go To 2 No → Using the wiring diagram/schematic as a guide, inspect the wiring and connectors for an intermittent condition. Perform MEMORY SYSTEM VERIFICATION TEST - VER 1.	All
2	Disconnect the Driver Power Seat Switch connector. Measure the voltage of the Driver Seat Rear Down Switch Sense circuit. Is there any voltage present? Yes → Go To 3 No → Replace the Driver Power Seat Switch. Perform MEMORY SYSTEM VERIFICATION TEST - VER 1.	All

DRIVER REAR RISER DOWN SWITCH STUCK — Continued

TEST	ACTION	APPLICABILITY
3	Disconnect the Power Seat Switch connector. Disconnect the Memory Seat/Mirror/Adjustable Pedals Module C2 connector. Turn the ignition on. Measure the voltage of the Driver Seat Rear Down Switch Sense circuit to ground.. Is there any voltage present? Yes → Repair the Driver Seat Rear Down Switch Sense wire for a short to voltage. Perform MEMORY SYSTEM VERIFICATION TEST - VER 1. No → Go To 4	All
4	If there are no possible causes remaining, view repair. Repair Replace the Memory Seat/Mirror/Adjustable Pedals Module. Perform MEMORY SYSTEM VERIFICATION TEST - VER 1.	All

Symptom:
DRIVER REAR RISER SENSOR OUT OF RANGE HIGH

When Monitored and Set Condition:

DRIVER REAR RISER SENSOR OUT OF RANGE HIGH

When Monitored: Continuously when the PCI bus is active.

Set Condition: This condition is immediately set when the seat motor potentiometer feeds a value higher than the Memory Seat/Mirror/Adjustable Pedals Module has stored in EEPROM. Code will remain for 50 ignition cycles.

POSSIBLE CAUSES
MEMORY SEAT/MIRROR/ADJUSTABLE PEDALS MODULE SENSOR GROUND OPEN
SEAT SENSOR GROUND WIRE OPEN
5 VOLT SUPPLY SHORTED HIGH
CHECK VOLTAGE ON REAR RISER POSITION SIGNAL CIRCUIT
REAR RISER SENSOR HIGH
CHECK REAR RISER SHORT TO MOTOR
SEAT 5 VOLT SUPPLY WIRE SHORTED TO REAR RISER POSITION SIGNAL CIRCUIT
MEMORY SEAT/MIRROR/ADJUSTABLE PEDALS MODULE REAR RISER HIGH
STORED DIAGNOSTIC TROUBLE CODE

TEST	ACTION	APPLICABILITY
1	With the DRBIII®, erase the DTC from Memory Seat/Mirror/Adjustable Pedals Module. Operate the driver's power seat and memory system. Turn the ignition switch to the Off position then start the engine and let run for one minute. With the DRBIII® check for the same DTC to reset in the MSMAPM. Did the same DTC reset? Yes → Go To 2 No → Using the wiring diagram/schematic as a guide, inspect the wiring and connectors for an intermittent condition. Perform MEMORY SYSTEM VERIFICATION TEST - VER 1.	All
2	Turn ignition off. Disconnect the Driver Power Seat Rear Riser Position Sensor connector. Measure the resistance of the Seat Position Sensor Ground circuit at the driver power seat rear riser connector. Is the resistance below 5.0 ohms? Yes → Go To 3 No → Go To 9	All

DRIVER REAR RISER SENSOR OUT OF RANGE HIGH — Continued

TEST	ACTION	APPLICABILITY
3	Disconnect the Rear Riser Position Sensor connector. Measure the voltage between Seat Sensor 5 volt supply circuit and ground. Turn ignition on. Is the voltage above 5.5 volts? Yes → Repair the Seat Sensor 5 Volt Supply circuit for a short to battery. Perform MEMORY SYSTEM VERIFICATION TEST - VER 1. No → Go To 4	All
4	Turn ignition off. Disconnect the Driver Power Seat Rear Riser Position Sensor Connector. Disconnect the Memory Seat/Mirror/Adjustable Pedals Module C2 Connector. Turn ignition on. Measure the voltage between Rear Riser Position Signal circuit and ground. Is the voltage above 0.2 volts? Yes → Repair the Rear Riser Position Signal circuit for a short to voltage. Perform MEMORY SYSTEM VERIFICATION TEST - VER 1. No → Go To 5	All
5	Turn ignition off. Disconnect the Driver Power Seat Rear Riser Position Sensor Connector. Ensure the Memory Seat/Mirror/Adjustable Pedals Mirror Module is fully connected before proceeding. Turn ignition on. With the DRBIII® in Sensors read the Rear Riser Position Sensor voltage. Is the voltage above 0.2 volts? Yes → Go To 6 No → Replace the Seat Track Assembly. Perform MEMORY SYSTEM VERIFICATION TEST - VER 1.	All
6	Ensure all seat and sensor connectors are connected and rear riser motor is operational. With the DRBIII® in Sensors monitor the Rear Riser Position sensor while operating the seat rear riser to both limits. Did the voltage ever go above 7.0 volts only when the motor was in operation? Yes → Replace the Seat Track Assembly. Perform MEMORY SYSTEM VERIFICATION TEST - VER 1. No → Go To 7	All
7	Turn ignition off. Disconnect the Memory Seat/Mirror/Adjustable Pedals Module C2 connector. Disconnect the Driver Power Seat Rear Riser Sensor connector. Measure the resistance between the Seat Sensor 5 volt supply to the Rear Riser Position Signal circuit. Is the resistance below 100.0 ohms? Yes → Repair the Seat 5 Volt Supply circuit for a short to the Rear Riser Position Signal circuit. Perform MEMORY SYSTEM VERIFICATION TEST - VER 1. No → Go To 8	All

DRIVER REAR RISER SENSOR OUT OF RANGE HIGH — Continued

TEST	ACTION	APPLICABILITY
8	If there are no possible causes remaining, view repair. Repair Replace the Memory Seat/Mirror/Adjustable Pedals Module. Perform MEMORY SYSTEM VERIFICATION TEST - VER 1.	All
9	Turn ignition off. Disconnect the Memory Seat/Mirror/Adjustable Pedals Module C2 connector. Disconnect the Driver Power Seat Rear Riser Position Sensor connector. Measure the resistance of the Seat Position Sensor Ground wire between the Rear Riser Sensor connector and the C2 connector. Is the resistance below 5.0 ohms? Yes → Replace the Memory Seat/Mirror/Adjustable Pedals Module. Perform MEMORY SYSTEM VERIFICATION TEST - VER 1. No → Repair the open Seat Sensor Ground wire. Perform MEMORY SYSTEM VERIFICATION TEST - VER 1.	All

Symptom:

DRIVER REAR RISER SENSOR OUT OF RANGE LOW

When Monitored and Set Condition:

DRIVER REAR RISER SENSOR OUT OF RANGE LOW

When Monitored: Continuously when the PCI bus is active.

Set Condition: This condition is immediately set when the seat motor potentiometer feeds a value lower than the Memory Seat/Mirror/Adjustable Pedals Module has stored in EEPROM. Code will remain for 50 ignition cycles.

POSSIBLE CAUSES
MEMORY SEAT/MIRROR/ADJUSTABLE PEDALS MODULE 5 VOLT SUPPLY
SEAT 5 VOLT SUPPLY WIRE SHORT TO GROUND
SEAT SENSOR 5 VOLT SUPPLY WIRE OPEN
REAR RISER POSITION SIGNAL CIRCUIT OPEN
REAR RISER POSITION SIGNAL CIRCUIT SHORT TO GROUND
REAR RISER SENSOR LOW
MEMORY SEAT/MIRROR/ADJUSTABLE PEDALS MODULE REAR RISER LOW
STORED DIAGNOSTIC TROUBLE CODE

TEST	ACTION	APPLICABILITY
1	With the DRBIII®, erase the DTC from Memory Seat/Mirror/Adjustable Pedals Module. Operate the driver's power seat and memory system. Turn the ignition switch to the Off position then start the engine and let run for one minute. With the DRBIII® check for the same DTC to reset in the MSMAPM. Did the same DTC reset? Yes → Go To 2 No → Using the wiring diagram/schematic as a guide, inspect the wiring and connectors for an intermittent condition. Perform MEMORY SYSTEM VERIFICATION TEST - VER 1.	All
2	Ensure the Memory Seat/Mirror/Adjustable Pedals Module is fully connected before proceeding. Disconnect the Driver Power Seat Rear Riser Sensor connector. Turn ignition on. Measure the voltage of the Seat Sensor 5 Volt Supply circuit at rear riser connector. Is the voltage above 4.5 volts? Yes → Go To 3 No → Go To 7	All

DRIVER REAR RISER SENSOR OUT OF RANGE LOW — Continued

TEST	ACTION	APPLICABILITY
3	Turn ignition off. Disconnect the Driver Power Seat Rear Riser Position Sensor Connector. Disconnect the Memory Seat/Mirror/Adjustable Pedals Module C2 Connector. Measure the resistance of the Rear Riser Position Signal circuit between the rear riser sensor and the Memory Seat/Mirror/Adjustable Pedals Module connector. Is the resistance below 5.0 ohms? Yes → Go To 4 No → Repair the Rear Riser Position Signal circuit for an open. Perform MEMORY SYSTEM VERIFICATION TEST - VER 1.	All
4	Turn ignition off. Disconnect the Memory Seat/Mirror/Adjustable Pedals Module C2 connector. Disconnect the Driver Power Seat Rear Riser Position Sensor connector. Measure the resistance of the Rear Riser Position Signal circuit to ground. Is the resistance below 1000 ohms? Yes → Repair the Rear Riser Position Signal circuit a short to ground. Perform MEMORY SYSTEM VERIFICATION TEST - VER 1. No → Go To 5	All
5	Turn ignition off. Ensure the Memory Seat/Mirror/Adjustable Pedals Module is fully connected before proceeding. Disconnect the Driver Power Seat Rear Riser Position Sensor Connector. Connect a jumper wire between Seat Sensor 5 volt Supply and Rear Riser Position Signal circuits. Turn ignition on. With the DRBIII® in sensors read the Rear Riser Position Sensor voltage. Is the voltage above 4.5 volts? Yes → Replace the Seat Track Assembly. Perform MEMORY SYSTEM VERIFICATION TEST - VER 1. No → Go To 6	All
6	If there are no possible causes remaining, view repair. Repair Replace the Memory Seat/Mirror/Adjustable Pedals Module. Perform MEMORY SYSTEM VERIFICATION TEST - VER 1.	All
7	Turn ignition off. Disconnect the Memory Seat/Mirror/Adjustable Pedals Module C2 connector. Measure the resistance of the Seat Sensor 5 volt supply circuit to body ground. Is the resistance below 100.0 ohms? Yes → Repair the Seat 5 Volt Supply circuit for a short to ground. Perform MEMORY SYSTEM VERIFICATION TEST - VER 1. No → Go To 8	All

DRIVER REAR RISER SENSOR OUT OF RANGE LOW — Continued

TEST	ACTION	APPLICABILITY
8	Turn ignition off. Disconnect the Memory Seat/Mirror/Adjustable Pedals Module C2 connector. Disconnect the Driver Power Seat Rear Riser Position Sensor connector. Measure the resistance of the Seat Sensor 5 Volt Supply wire between the Rear Riser Sensor connector and the C2 connector. Is the resistance below 5.0 ohms? Yes → Go To 9 No → Repair the Seat Sensor 5 Volt Supply circuit for an open. Perform MEMORY SYSTEM VERIFICATION TEST - VER 1.	All
9	If there are no possible cause remaining, view repair. Repair Replace the Memory Seat/Mirror/Adjustable Pedals Module. Perform MEMORY SYSTEM VERIFICATION TEST - VER 1.	All

Symptom:
DRIVER REAR RISER UP SWITCH STUCK

When Monitored and Set Condition:

DRIVER REAR RISER UP SWITCH STUCK

When Monitored: Continuously when the PCI bus is active.

Set Condition: If the seat switch is active for 30 seconds, this code will set and the MSMAPM will ignore the input until the state has changed. Three seconds after the stuck condition is removed, the seat will resume to normal operation. Code will remain for 50 ignition cycles.

POSSIBLE CAUSES
STORED DIAGNOSTIC TROUBLE CODE
DRIVER POWER SEAT SWITCH
DRIVER SEAT REAR UP SWITCH SENSE WIRE SHORT TO VOLTAGE
MEMORY SEAT/MIRROR/ADJUSTABLE PEDALS MODULE

TEST	ACTION	APPLICABILITY
1	With the DRBIII®, erase the DTC from Memory Seat/Mirror/Adjustable Pedals Module. Operate the driver's power seat and memory system. Turn the ignition switch to the Off position then start the engine and let run for one minute. With the DRBIII® check for the same DTC to reset in the MSMAPM. Did the same DTC reset? Yes → Go To 2 No → Using the wiring diagram/schematic as a guide, inspect the wiring and connectors for an intermittent condition. Perform MEMORY SYSTEM VERIFICATION TEST - VER 1.	All
2	Disconnect the Driver Power Seat Switch connector. Measure the voltage of the Driver Seat Rear Up Switch Sense circuit. Is there any voltage present? Yes → Go To 3 No → Replace the Driver Power Seat Switch. Perform MEMORY SYSTEM VERIFICATION TEST - VER 1.	All

DRIVER REAR RISER UP SWITCH STUCK — Continued

TEST	ACTION	APPLICABILITY
3	Disconnect the Driver Power Seat Switch connector. Disconnect the Memory Seat/Mirror/Adjustable Pedals Module C2 connector. Turn the ignition on. Measure the voltage of the Driver Seat Rear Up Switch Sense circuit to ground.. Is there any voltage present? Yes → Repair the Driver Seat Rear Up Switch Sense wire for a short to voltage. Perform MEMORY SYSTEM VERIFICATION TEST - VER 1. No → Go To 4	All
4	If there are no possible causes remaining, view repair. Repair Replace the Memory Seat/Mirror/Adjustable Pedals Module. Perform MEMORY SYSTEM VERIFICATION TEST - VER 1.	All

Symptom:
DRIVER RECLINER DOWN SWITCH STUCK

When Monitored and Set Condition:

DRIVER RECLINER DOWN SWITCH STUCK

When Monitored: Continuously when the PCI bus is active.

Set Condition: If the seat switch is active for 30 seconds, this code will set and the MSMAPM will ignore the input until the state has changed. Three seconds after the stuck condition is removed, the seat will resume to normal operation. Code will remain for 50 ignition cycles.

POSSIBLE CAUSES
STORED DIAGNOSTIC TROUBLE CODE
DRIVER POWER SEAT SWITCH
DRIVER SEAT RECLINER DOWN SWITCH SENSE WIRE SHORT TO VOLTAGE
MEMORY SEAT/MIRROR/ADJUSTABLE PEDALS MODULE

TEST	ACTION	APPLICABILITY
1	With the DRBIII®, erase the DTC from Memory Seat/Mirror/Adjustable Pedals Module. Operate the driver's power seat and memory system. Turn the ignition switch to the Off position then start the engine and let run for one minute. With the DRBIII® check for the same DTC to reset in the MSMAPM. Did the same DTC reset? Yes → Go To 2 No → Using the wiring diagram/schematic as a guide, inspect the wiring and connectors for an intermittent condition. Perform MEMORY SYSTEM VERIFICATION TEST - VER 1.	All
2	Disconnect the Driver Power Seat Switch connector. Measure the voltage of the Driver Seat Recliner Down Switch Sense circuit. Is there any voltage present? Yes → Go To 3 No → Replace the Driver Power Seat Switch. Perform MEMORY SYSTEM VERIFICATION TEST - VER 1.	All

DRIVER RECLINER DOWN SWITCH STUCK — Continued

TEST	ACTION	APPLICABILITY
3	Disconnect the Driver Power Seat Switch connector. Disconnect the Memory Seat/Mirror/Adjustable Pedals Module C2 connector. Turn the ignition on. Measure the voltage of the Driver Seat Recliner Down Switch Sense circuit to ground. Is there any voltage present? Yes → Repair the Driver Seat Recliner Down Switch Sense wire for a short to voltage. Perform MEMORY SYSTEM VERIFICATION TEST - VER 1. No → Go To 4	All
4	If there are no possible causes remaining, view repair. Repair Replace the Memory Seat/Mirror/Adjustable Pedals Module. Perform MEMORY SYSTEM VERIFICATION TEST - VER 1.	All

Symptom:
DRIVER RECLINER SENSOR OUT OF RANGE HIGH

When Monitored and Set Condition:

DRIVER RECLINER SENSOR OUT OF RANGE HIGH

When Monitored: Continuously when the PCI bus is active.

Set Condition: This condition is immediately set when the seat motor potentiometer feeds a value higher than the Memory Seat/Mirror/Adjustable Pedals Module has stored in EEPROM. Code will remain for 50 ignition cycles.

POSSIBLE CAUSES
MEMORY SEAT/MIRROR/ADJUSTABLE PEDALS MODULE SENSOR GROUND OPEN
SEAT SENSOR GROUND WIRE OPEN
5 VOLT SUPPLY SHORTED HIGH
CHECK VOLTAGE ON RECLINER POSITION SIGNAL CIRCUIT
RECLINER SENSOR HIGH
CHECK RECLINER SENSOR SHORT TO MOTOR
SEAT 5 VOLT SUPPLY WIRE SHORTED TO RECLINER POSITION SIGNAL CIRCUIT
MEMORY SEAT/MIRROR/ADJUSTABLE PEDALS MODULE RECLINER SENSOR HIGH
STORED DIAGNOSTIC TROUBLE CODE

TEST	ACTION	APPLICABILITY
1	With the DRBIII®, erase the DTC from Memory Seat/Mirror/Adjustable Pedals Module. Operate the driver's power seat and memory system. Turn the ignition switch to the Off position then start the engine and let run for one minute. With the DRBIII® check for the same DTC to reset in the MSMAPM. Did the same DTC reset? Yes → Go To 2 No → Using the wiring diagram/schematic as a guide, inspect the wiring and connectors for an intermittent condition. Perform MEMORY SYSTEM VERIFICATION TEST - VER 1.	All
2	Turn ignition off. Disconnect the Driver Power Seat Recliner Position Sensor connector. Measure the resistance of the Seat Position Sensor Ground circuit at the driver power seat Recliner connector to ground. Is the resistance below 5.0 ohms? Yes → Go To 3 No → Go To 9	All

DRIVER RECLINER SENSOR OUT OF RANGE HIGH — Continued

TEST	ACTION	APPLICABILITY
3	Disconnect the Driver Power Seat Recliner Position Sensor connector. Measure the voltage between Seat Sensor 5 volt supply circuit and ground. Turn ignition on. Is the voltage above 5.5 volts? Yes → Repair the Seat Sensor 5 Volt Supply circuit for a short to battery. Perform MEMORY SYSTEM VERIFICATION TEST - VER 1. No → Go To 4	All
4	Turn ignition off. Disconnect the Driver Power Seat Recliner Position Sensor Connector. Disconnect the Memory Seat/Mirror/Adjustable Pedals Module C2 Connector. Turn ignition on. Measure the voltage between Recliner Position Signal circuit and ground. Is the voltage above 0.2 volts? Yes → Repair the Recliner Position Signal circuit for a short to voltage. Perform MEMORY SYSTEM VERIFICATION TEST - VER 1. No → Go To 5	All
5	Turn ignition off. Disconnect the Driver Power Seat Recliner Position Sensor Connector. Ensure the Memory Seat/Mirror/Adjustable Pedals Module is fully connected before proceeding. Turn ignition on. With the DRBIII® in Sensors read the Recliner Position Sensor voltage. Is the voltage above 0.2 volts? Yes → Go To 6 No → Replace the Seat Track Assembly. Perform MEMORY SYSTEM VERIFICATION TEST - VER 1.	All
6	Ensure all seat and sensor connectors are connected and Recliner motor is operational. With the DRBIII® in Sensors monitor the Recliner Position sensor while operating the seat Recliner motor to both limits. Did the voltage ever go above 7.0 volts only when the motor was in operation? Yes → Replace the Seat Track Assembly. Perform MEMORY SYSTEM VERIFICATION TEST - VER 1. No → Go To 7	All
7	Turn ignition off. Disconnect the Memory Seat/Mirror/Adjustable Pedals Module C2 connector. Disconnect the Driver Power Seat Recliner Position Sensor connector. Measure the resistance between the Seat Sensor 5 volt supply to the Recliner Position Signal circuit. Is the resistance below 100.0 ohms? Yes → Repair the Seat 5 Volt Supply circuit for a short to the Recliner Position Signal circuit. Perform MEMORY SYSTEM VERIFICATION TEST - VER 1. No → Go To 8	All

DRIVER RECLINER SENSOR OUT OF RANGE HIGH — Continued

TEST	ACTION	APPLICABILITY
8	If there are no possible causes remaining, view repair. Repair Replace the Memory Seat/Mirror/Adjustable Pedals Module. Perform MEMORY SYSTEM VERIFICATION TEST - VER 1.	All
9	Turn ignition off. Disconnect the Memory Seat/Mirror/Adjustable Pedals Module C2 connector. Disconnect the Driver Power Seat Recliner Position Sensor connector. Measure the resistance of the Seat Position Sensor Ground wire between the Recliner Sensor connector and the C2 connector. Is the resistance below 5.0 ohms? Yes → Replace the Memory Seat/Mirror/Adjustable Pedals Module. Perform MEMORY SYSTEM VERIFICATION TEST - VER 1. No → Repair the open Seat Sensor Ground wire. Perform MEMORY SYSTEM VERIFICATION TEST - VER 1.	All

Symptom:
DRIVER RECLINER SENSOR OUT OF RANGE LOW

When Monitored and Set Condition:

DRIVER RECLINER SENSOR OUT OF RANGE LOW

When Monitored: Continuously when the PCI bus is active.

Set Condition: This condition is immediately set when the seat motor potentiometer feeds a value lower than the Memory Seat/Mirror/Adjustable Pedals Module has stored in EEPROM. Code will remain for 50 ignition cycles.

POSSIBLE CAUSES
SEAT 5 VOLT SUPPLY WIRE SHORT TO GROUND
SEAT SENSOR 5 VOLT SUPPLY WIRE OPEN
RECLINER POSITION SIGNAL CIRCUIT OPEN
RECLINER POSITION SIGNAL CIRCUIT SHORT TO GROUND
MEMORY SEAT/MIRROR/ADJUSTABLE PEDALS MODULE 5 VOLT SUPPLY
RECLINER SENSOR LOW
MEMORY SEAT/MIRROR/ADJUSTABLE PEDALS MODULE RECLINER LOW
STORED DIAGNOSTIC TROUBLE CODE

TEST	ACTION	APPLICABILITY
1	With the DRBIII®, erase the DTC from Memory Seat/Mirror/Adjustable Pedals Module. Operate the driver's power seat and memory system. Turn the ignition switch to the Off position then start the engine and let run for one minute. With the DRBIII® check for the same DTC to reset in the MSMAPM. Did the same DTC reset? Yes → Go To 2 No → Using the wiring diagram/schematic as a guide, inspect the wiring and connectors for an intermittent condition. Perform MEMORY SYSTEM VERIFICATION TEST - VER 1.	All
2	Ensure the Memory Seat/Mirror/Adjustable Pedals Module is fully connected before proceeding. Disconnect the Driver Power Seat Recliner Position Sensor connector. Turn ignition on. Measure the voltage of the Seat Sensor 5 Volt Supply circuit at Recliner sensor connector. Is the voltage above 4.5 volts? Yes → Go To 3 No → Go To 7	All

DRIVER RECLINER SENSOR OUT OF RANGE LOW — Continued

TEST	ACTION	APPLICABILITY
3	Turn ignition off. Disconnect the Driver Power Seat Recliner Position Sensor Connector. Disconnect the Memory Seat/Mirror/Adjustable Pedals Module C2 Connector. Measure the resistance of the Recliner Position Signal circuit between the Recliner sensor and the Memory Seat/Mirror/Adjustable Pedals Module connector. Is the resistance below 5.0 ohms? Yes → Go To 4 No → Repair the Recliner Position Signal circuit for an open. Perform MEMORY SYSTEM VERIFICATION TEST - VER 1.	All
4	Turn ignition off. Disconnect the Memory Seat/Mirror/Adjustable Pedals Module C2 connector. Disconnect the Driver Power Seat Recliner Position Sensor connector. Measure the resistance of the Recliner Position Signal circuit to ground. Is the resistance below 1000 ohms? Yes → Repair the Recliner Position Signal circuit a short to ground. Perform MEMORY SYSTEM VERIFICATION TEST - VER 1. No → Go To 5	All
5	Turn ignition off. Ensure the Memory Seat/Mirror/Adjustable Pedals Module is fully connected before proceeding. Disconnect the Driver Power Seat Recliner Position Sensor Connector. Connect a jumper wire between Seat Sensor 5 volt Supply and Recliner Position Signal circuits. Turn ignition on. With the DRBIII® in Sensors read the Recliner Position Sensor voltage. Is the voltage above 4.5 volts? Yes → Replace the Seat Track Assembly. Perform MEMORY SYSTEM VERIFICATION TEST - VER 1. No → Go To 6	All
6	If there are no possible causes remaining, view repair. Repair Replace the Memory Seat/Mirror/Adjustable Pedals Module. Perform MEMORY SYSTEM VERIFICATION TEST - VER 1.	All
7	Turn ignition off. Disconnect the Memory Seat/Mirror/Adjustable Pedals Module C2 connector. Measure the resistance of the Seat Sensor 5 volt supply circuit to body ground. Is the resistance below 100.0 ohms? Yes → Repair the Seat 5 Volt Supply circuit for a short to ground. Perform MEMORY SYSTEM VERIFICATION TEST - VER 1. No → Go To 8	All

DRIVER RECLINER SENSOR OUT OF RANGE LOW — Continued

TEST	ACTION	APPLICABILITY
8	Turn ignition off. Disconnect the Memory Seat/Mirror/Adjustable Pedals Module C2 connector. Disconnect the Driver Power Seat Recliner Position Sensor connector. Measure the resistance of the Seat Sensor 5 Volt Supply wire between the Recliner Sensor connector and the C2 connector. Is the resistance below 5.0 ohms? Yes → Go To 9 No → Repair the Seat Sensor 5 Volt Supply circuit for an open. Perform MEMORY SYSTEM VERIFICATION TEST - VER 1.	All
9	If there are no possible cause remaining, view repair. Repair Replace the Memory Seat/Mirror/Adjustable Pedals Module. Perform MEMORY SYSTEM VERIFICATION TEST - VER 1.	All

Symptom:
DRIVER RECLINER UP SWITCH STUCK

When Monitored and Set Condition:

DRIVER RECLINER UP SWITCH STUCK

When Monitored: Continuously when the PCI bus is active.

Set Condition: If the seat switch is active for 30 seconds, this code will set and the Memory Seat/Mirror/Adjustable Pedals Module will ignore the input until the state has changed. Three seconds after the stuck condition is removed, the seat will resume to normal operation. Code will remain for 50 ignition cycles.

POSSIBLE CAUSES
STORED DIAGNOSTIC TROUBLE CODE
DRIVER POWER SEAT SWITCH
DRIVER SEAT RECLINER UP SWITCH SENSE WIRE SHORT TO VOLTAGE
MEMORY SEAT/MIRROR/ADJUSTABLE PEDALS MODULE

TEST	ACTION	APPLICABILITY
1	With the DRBIII®, erase the DTC from Memory Seat/Mirror/Adjustable Pedals Module. Operate the driver's power seat and memory system. Turn the ignition switch to the Off position then start the engine and let run for one minute. With the DRBIII® check for the same DTC to reset in the MSMAPM. Did the same DTC reset? Yes → Go To 2 No → Using the wiring diagram/schematic as a guide, inspect the wiring and connectors for an intermittent condition. Perform MEMORY SYSTEM VERIFICATION TEST - VER 1.	All
2	Disconnect the Driver Power Seat Switch connector. Measure the voltage of the Driver Seat Recliner Up Switch Sense circuit. Is there any voltage present? Yes → Go To 3 No → Replace the Driver Power Seat Switch. Perform MEMORY SYSTEM VERIFICATION TEST - VER 1.	All

DRIVER RECLINER UP SWITCH STUCK — Continued

TEST	ACTION	APPLICABILITY
3	Disconnect the Driver Power Seat Switch connector. Disconnect the Memory Seat/Mirror/Adjustable Pedals Module C2 connector. Turn the ignition on. Measure the voltage of the Driver Seat Recliner Up Switch Sense circuit to ground.. Is there any voltage present? Yes → Repair the Driver Seat Recliner Up Switch Sense wire for a short to voltage. Perform MEMORY SYSTEM VERIFICATION TEST - VER 1. No → Go To 4	All
4	If there are no possible causes remaining, view ″Repair″. Repair Replace the Memory Seat/Mirror/Adjustable Pedals Module. Perform MEMORY SYSTEM VERIFICATION TEST - VER 1.	All

Symptom List:

EEPROM CHECKSUM FAILURE
LOOPBACK FAILURE

Test Note: All symptoms listed above are diagnosed using the same tests. The title for the tests will be EEPROM CHECKSUM FAILURE.

When Monitored and Set Condition:

EEPROM CHECKSUM FAILURE

When Monitored: With the ignition in the on position.

Set Condition: The Memory Seat/Mirror/Adjustable Pedals Module has a internal EEPROM failure.

LOOPBACK FAILURE

When Monitored: Continuously.

Set Condition: If an internal Memory Seat/Mirror/Adjustable Pedals Module test fails.

POSSIBLE CAUSES
EEPROM CHECKSUM FAILURE

TEST	ACTION	APPLICABILITY
1	If there are no possible causes remaining, view repair. Repair Replace the Memory Seat/Mirror/Adjustable Pedals Module. Perform MEMORY SYSTEM VERIFICATION TEST - VER 1.	All

Symptom:
MEMORY POSITION SWITCH STUCK

When Monitored and Set Condition:

MEMORY POSITION SWITCH STUCK

When Monitored: Anytime the Body Control Module is awake.

Set Condition: If the Memory switch is active for over 10 seconds, the BCM will set this code.

POSSIBLE CAUSES
DTC PRESENT
MEMORY SET SWITCH STUCK
MEMORY SELECT SWITCH MUX SHORT TO GROUND
BODY CONTROL MODULE

TEST	ACTION	APPLICABILITY
1	With the DRBIII®, record and erase DTC's. Cycle the ignition OFF then back ON. With the DRBIII®, read DTCs. Operate the Memory Set switch several times while monitoring the DRBIII. Does the DRBIII® display MEMORY SWITCH INPUT STUCK? Yes → Go To 2 No → Using the wiring diagram/schematic as a guide, inspect the wiring and connectors for an intermittent condition. Perform MEMORY SYSTEM VERIFICATION TEST - VER 1.	All
2	Disconnect the Memory Set Switch connector Turn the ignition on. With the DRBIII® in Sensors, read the Memory Select SW Volts. Is the voltage above 4.8 volts? Yes → Replace the Memory Set Switch. Perform MEMORY SYSTEM VERIFICATION TEST - VER 1. No → Go To 3	All
3	Turn the ignition off. Disconnect the Memory Set switch connector. Disconnect the BCM C1 harness connector. Measure the resistance between ground and the Memory Select Switch MUX circuit. Is the resistance above 1000.0 ohms? Yes → Go To 4 No → Repair the Memory Select Switch MUX circuit for a short to ground. Perform MEMORY SYSTEM VERIFICATION TEST - VER 1.	All

MEMORY POSITION SWITCH STUCK — Continued

TEST	ACTION	APPLICABILITY
4	If there are no possible causes remaining, view repair. Repair Replace the Body Control Module. Perform MEMORY SYSTEM VERIFICATION TEST - VER 1.	All

Symptom:

MEMORY SWITCH INPUT OPEN

When Monitored and Set Condition:

MEMORY SWITCH INPUT OPEN

When Monitored: Continuously when the PCI bus is active.

Set Condition: When the Memory Set switch voltage is greater than 4.8 volts for over 10 seconds, the BCM will set this code.

POSSIBLE CAUSES
DTC PRESENT
MEMORY SET SWITCH OPEN
MEMORY SELECT SWITCH MUX OPEN
MEMORY SELECT SWITCH RETURN OPEN
BODY CONTROL MODULE

TEST	ACTION	APPLICABILITY
1	With the DRBIII®, record and erase DTC's. Cycle the ignition OFF then back ON. With the DRBIII®, read DTCs. Operate the Memory Set switch several times while monitoring the DRBIII. Does the DRBIII® display MEMORY SWITCH INPUT OPEN? Yes → Go To 2 No → Using the wiring diagram/schematic as a guide, inspect the wiring and connectors for an intermittent condition. Perform MEMORY SYSTEM VERIFICATION TEST - VER 1.	All
2	Disconnect the Memory Set Switch connector Turn the ignition on. Connect a jumper wire between Memory Select Switch MUX and Memory Select Switch Return. With the DRBIII® in Sensors, read the Memory Select SW Volts. Is the voltage below 1.0 volt? Yes → Replace the Memory Set Switch. Perform MEMORY SYSTEM VERIFICATION TEST - VER 1. No → Go To 3	All

MEMORY SWITCH INPUT OPEN — Continued

TEST	ACTION	APPLICABILITY
3	Turn the ignition off. Disconnect the Memory Set switch connector. Disconnect the BCM C1 harness connector. Measure the resistance of the Memory Select Switch MUX circuit between the Memory Set Switch connector and the BCM C1 connector. Is the resistance below 5.0 ohms? Yes → Go To 4 No → Repair the Memory Select Switch MUX circuit for an open. Perform MEMORY SYSTEM VERIFICATION TEST - VER 1.	All
4	Turn the ignition off. Disconnect the Memory Set switch connector. Disconnect the BCM C1 harness connector. Measure the resistance of the Memory Select Switch Return circuit between the Memory Set Switch connector and the BCM C1 connector. Is the resistance below 5.0 ohms? Yes → Go To 5 No → Repair the Memory Select Switch Return circuit for an open. Perform MEMORY SYSTEM VERIFICATION TEST - VER 1.	All
5	If there are no possible causes remaining, view repair. Repair Replace the Body Control Module. Perform MEMORY SYSTEM VERIFICATION TEST - VER 1.	All

Symptom:
MEMORY SWITCH INPUT SHORT

When Monitored and Set Condition:

MEMORY SWITCH INPUT SHORT

When Monitored: Anytime the Body Control Module is awake.

Set Condition: If the Memory Set switch voltage is less than 1.35 volts for over 10 seconds the BCM will set this code.

POSSIBLE CAUSES
DTC PRESENT
MEMORY SET SWITCH SHORTED
MEMORY SELECT SWITCH MUX SHORTED
BODY CONTROL MODULE

TEST	ACTION	APPLICABILITY
1	With the DRBIII®, record and erase DTC's. Cycle the ignition OFF then back ON. With the DRBIII®, read DTCs. Operate the Memory Set switch several times while monitoring the DRBIII. Does the DRBIII® display MEMORY SWITCH INPUT SHORT? Yes → Go To 2 No → Using the wiring diagram/schematic as a guide, inspect the wiring and connectors for an intermittent condition. Perform MEMORY SYSTEM VERIFICATION TEST - VER 1.	All
2	Disconnect the Memory Set Switch connector Turn the ignition on. With the DRBIII® in Sensors, read the Memory Select SW Volts. Is the voltage above 4.8 volts? Yes → Replace the Memory Set Switch. Perform MEMORY SYSTEM VERIFICATION TEST - VER 1. No → Go To 3	All
3	Turn the ignition off. Disconnect the Memory Set switch connector. Disconnect the BCM C1 harness connector. Measure the resistance between ground and the Memory Select Switch MUX circuit. Is the resistance above 5.0 ohms? Yes → Go To 4 No → Repair the Memory Select Switch MUX circuit for a short to ground. Perform MEMORY SYSTEM VERIFICATION TEST - VER 1.	All

MEMORY SWITCH INPUT SHORT — Continued

TEST	ACTION	APPLICABILITY
4	If there are no possible causes remaining, view repair. Repair Replace the Body Control Module. Perform MEMORY SYSTEM VERIFICATION TEST - VER 1.	All

Symptom List:

PCI BUS SHORTED TO BATTERY
PCI BUS SHORTED TO GROUND

Test Note: All symptoms listed above are diagnosed using the same tests. The title for the tests will be PCI BUS SHORTED TO BATTERY.

When Monitored and Set Condition:

PCI BUS SHORTED TO BATTERY

When Monitored: Continuously.

Set Condition: Anytime the Memory Seat/Mirror/Adjustable Pedals Module detects a short to battery on the PCI Bus circuit.

PCI BUS SHORTED TO GROUND

When Monitored: Continuously.

Set Condition: Anytime the Memory Seat/Mirror/Adjustable Pedals Module detects a short to ground on the PCI Bus circuit.

POSSIBLE CAUSES
INTERMITTENT CONDITION

TEST	ACTION	APPLICABILITY
1	**NOTE: For this code to be active, the DRBIII® will not be able to communicate with any modules on the vehicle (except the PCM).** **NOTE: Clear the code. If this code continues to set and the DRBIII® can still communicate with the module, it will be necessary to replace the module.** **NOTE: The conditions that set the DTC are not present at this time. The following list may help in identifying the intermittent condition.** With the engine running at normal operating temperature, wiggle the wiring harnesses. This is to try and duplicate the complete bus failure condition. Refer to any Technical Service Bulletins (TSB) that may apply. Visually inspect the related wiring harness. Look for any chafed, pierced, pinched, or partially broken wires. Visually inspect the related wiring harness connectors. Look for broken, bent, pushed out, or corroded terminals. Were any of the above conditions present? Yes → Repair as necessary. Perform BODY VERIFICATION TEST - VER 1. No → Test Complete.	All

Symptom:
PCM MESSAGES NOT RECEIVED

When Monitored and Set Condition:

PCM MESSAGES NOT RECEIVED

When Monitored: Continuously when the PCI bus is active.

Set Condition: If the Memory Seat/Mirror/Adjustable Pedals Module does receive this Bus message from the PCM. Code will remain for 50 ignition cycles.

POSSIBLE CAUSES
PCM MESSAGE NOT RECEIVED
ATTEMPT TO COMMUNICATE WITH THE PCM
PCI BUS CIRCUIT OPEN
POWERTRAIN CONTROL MODULE

TEST	ACTION	APPLICABILITY
1	Turn the ignition on. With the DRBIII®, enter Instrument Cluster, System Tests then PCM Monitor. Does the DRBIII® display: PCM is active on BUS? Yes → Erase the DTC, if DTC resets, replace the Memory Seat/Mirror/Adjustable Pedals Module in accordance with the service information. Perform MEMORY SYSTEM VERIFICATION TEST - VER 1. No → Go To 2	All
2	Turn the ignition on. With the DRBIII®, attempt to communicate with the PCM. Was the DRBIII® able to communicate with the PCM? Yes → Go To 3 No → Refer to the communication category and perform the appropriate symptom. Perform BODY VERIFICATION TEST - VER 1.	All

PCM MESSAGES NOT RECEIVED — Continued

TEST	ACTION	APPLICABILITY
3	Turn the ignition off. Disconnect the PCM harness connector. Note: If equipped with NGC follow the caution below. **CAUTION: DO NOT PROBE THE PCM HARNESS CONNECTORS. PROBING THE PCM HARNESS CONNECTORS WILL DAMAGE THE PCM TERMINALS RESULTING IN POOR TERMINAL TO PIN CONNECTION. INSTALL MILLER SPECIAL TOOL #8815 TO PERFORM DIAGNOSIS.** Measure the resistance of the PCI Bus circuit between the DLC and the PCM connector. Is the resistance below 5.0 ohms? Yes → Replace and program the Powertrain Control Module in accordance with the Service Information. Perform BODY VERIFICATION TEST - VER 1. No → Repair the PCI Bus circuit for an open. Perform BODY VERIFICATION TEST - VER 1.	All

Symptom:
TCM MESSAGES NOT RECEIVED

When Monitored and Set Condition:

TCM MESSAGES NOT RECEIVED

When Monitored: Continuously when the PCI bus is active.

Set Condition: If the Memory Seat/Mirror/Adjustable Pedals Module does receive this Bus message from the TCM. Code will remain for 50 ignition cycles.

POSSIBLE CAUSES
ATTEMPT TO COMMUNICATE WITH THE TCM
MEMORY SEAT/MIRROR/ADJUSTABLE PEDALS MODULE

TEST	ACTION	APPLICABILITY
1	Turn the ignition on. With the DRBIII®, attempt to communicate with the Transmission Control Module. Was the DRBIII® able to I/D or communicate with the TCM? Yes → Go To 2 No → Refer to the Communication category for the related symptom(s). Perform BODY VERIFICATION TEST - VER 1.	All
2	With the DRBIII®, erase DTC's. Cycle the ignition switch from off to on and wait approximately 1 minute. With the DRBIII®, read DTC's. Did this DTC reset? Yes → Replace the Memory Seat/Mirror/Adjustable Pedals Module in accordance with the service information. Perform BODY VERIFICATION TEST - VER 1. No → Test Complete.	All

Symptom:
BUS MESSAGES MISSING

When Monitored and Set Condition:

BUS MESSAGES MISSING

When Monitored: While the EVIC is performing a series of tests on the microprocessor, compass coil, and internal circuitry.

Set Condition: The code will be set, if during the self test the EVIC does not receive messages from the BCM, FCM, EATX or PCM.

POSSIBLE CAUSES
BCM COMMUNICATION
PCM COMMUNICATION
FCM COMMUNICATION
EATX COMMUNICATION
EVIC

TEST	ACTION	APPLICABILITY
1	Turn the ignition on. With the DRBIII®, attempt to communicate with BCM. Can communication be established with the BCM? Yes → Go To 2 No → Refer to Communication Category and perform the appropriate system. Perform BODY VERIFICATION TEST - VER 1.	All
2	Turn the ignition on. With the DRBIII®, access Body Control Module. Select Body Controller and System test. Does the DRBIII® display PCM Active on the Bus? Yes → Go To 3 No → Refer to Communication Category and perform the appropriate system. Perform BODY VERIFICATION TEST - VER 1.	All
3	Turn the ignition on. With the DRBIII®, attempt to communicate with the FCM. Can communication be established with the FCM? Yes → Go To 4 No → Refer to Communication Category and perform the appropriate system. Perform BODY VERIFICATION TEST - VER 1.	All

BUS MESSAGES MISSING — Continued

TEST	ACTION	APPLICABILITY
4	Turn the ignition on. With the DRBIII®, attempt to communicate with the EATX. Can communication be established with the EATX? Yes → Replace the EVIC Module. Perform BODY VERIFICATION TEST - VER 1. No → Refer to Communication Category and perform the appropriate system. Perform BODY VERIFICATION TEST - VER 1.	All

Symptom:
COMPASS TEST FAILURE

When Monitored and Set Condition:

COMPASS TEST FAILURE

When Monitored: During the EVIC self test.

Set Condition:

POSSIBLE CAUSES
CMTC/EVIC MODULE

TEST	ACTION	APPLICABILITY
1	Perform the CMTC/EVIC self test. Turn the ignition off. Depress and hold the RESET and STEP buttons while turning the ignition on. **NOTE: This test may also be performed using the DRBIII®.** Does the CMTC/EVIC or DRBIII® display ″FAILED SELF TEST″? Yes → Replace the CMTC or EVIC in accordance with the Service Information. Perform BODY VERIFICATION TEST - VER 1. No → Test Complete.	All

Symptom:

DEMAGNETIZE COMPASS AS PER SERVICE MANUAL

When Monitored and Set Condition:

DEMAGNETIZE COMPASS AS PER SERVICE MANUAL

When Monitored: During the EVIC self test.

Set Condition: Compass has been magnetized.

POSSIBLE CAUSES
DEMAGNETIZE COMPASS

TEST	ACTION	APPLICABILITY
1	Refer to the Service Information for the Demagnetizing Procedure. View Repair for Verification Test. Repair When the Demagnetizing Procedure is complete perform the Verification Test. Perform BODY VERIFICATION TEST - VER 1.	All

Symptom:

EC MIRROR DAY/NIGHT LINE FAULT

When Monitored and Set Condition:

EC MIRROR DAY/NIGHT LINE FAULT

When Monitored: With the ignition on.

Set Condition: The EVIC Module does not receive any messages from the EC Mirror.

POSSIBLE CAUSES
INTERMITTENT CONDITION
AUTOMATIC DAY/NIGHT MIRROR
AUTOMATIC HEADLAMP SWITCH SENSOR CIRCUIT OPEN
AUTOMATIC HEADLAMP SWITCH SENSOR CIRCUIT SHORTED TO GROUND
AUTOMATIC HEADLAMP SWITCH SENSOR CIRCUIT SHORTED TO VOLTAGE
CMTC/EVIC MODULE

TEST	ACTION	APPLICABILITY
1	With the DRBIII®, erase the DTC. Cycle the ignition on and off several times, leaving the ignition on for at least 15 seconds. With the DRBIII®, read DTCs. Did the DTC reset? Yes → Go To 2 No → The condition is not present at this time. Monitor DRBIII® parameters while wiggling the related wire harness. Refer to any Technical Service Bulletins (TSB) that may apply. Visually inspect the related wiring harness and connector terminals. Perform BODY VERIFICATION TEST - VER 1.	All
2	Turn the ignition off. Disconnect the Automatic Day/Night Mirror harness connector. Turn the ignition on. Measure the voltage of the Automatic Headlamp Switch Sensor circuit in the Automatic Day/Night Mirror harness connector. Is the voltage 4.9 volts? Yes → Replace the Automatic Day/Night Mirror in accordance with the Service Information. Perform BODY VERIFICATION TEST - VER 1. No → Go To 3	All

EC MIRROR DAY/NIGHT LINE FAULT — Continued

TEST	ACTION	APPLICABILITY
3	Turn the ignition off. Disconnect the EVIC harness connector. Disconnect the Automatic Day/Night Mirror harness connector. Measure the resistance of the Automatic Headlamp Switch Sensor circuit between the Automatic Day/Night Mirror harness connector and the EVIC harness connector. Is the resistance below 5.0 ohms? Yes → Go To 4 No → Repair the Automatic Headlamp Switch Sensor circuit for an open. Perform BODY VERIFICATION TEST - VER 1.	All
4	Turn the ignition off. Disconnect the EVIC harness connector. Disconnect the Automatic Day/Night Mirror harness connector. Measure the resistance of the Automatic Headlamp Switch Sensor circuit in the EVIC harness connector to ground. Is the resistance below 5.0 ohms? Yes → Repair the Automatic Headlamp Switch Sensor circuit for a short to ground. Perform BODY VERIFICATION TEST - VER 1. No → Go To 5	All
5	Turn the ignition off. Disconnect the Automatic Day/Night Mirror harness connector. Disconnect the EVIC harness connector. Using a 12 volt test light connected to ground, probe the Automatic Headlamp Switch Sensor circuit in the Automatic Day/Night Mirror harness connector. Does the test illuminate brightly? Yes → Repair the Automatic Headlamp Switch Sensor circuit for a shorted to voltage. Perform BODY VERIFICATION TEST - VER 1. No → Replace the CMTC/EVIC Module. Perform BODY VERIFICATION TEST - VER 1.	All

Symptom:
EVIC INTERNAL FAILURE

When Monitored and Set Condition:

EVIC INTERNAL FAILURE

When Monitored: When a SELF TEST command is received from the DRBIII, the EVIC performs a series of tests on the microprocessor, compass coil, and internal circuitry.

Set Condition: The code will be set, if during the self test the EVIC detects a problem the microprocessor, compass coil, and internal circuitry.

POSSIBLE CAUSES
EVIC INTERNAL FAILURE

TEST	ACTION	APPLICABILITY
1	Turn the ignition on. With the DRBIII®, erase the DTC. Cycle the ignition on and off several times leaving the ignition in the on position for at least 15 second each time. With the DRBIII®, read DTCs. Does the DTC reset? Yes → Replace Electronic Vehicle Information Center. Perform BODY VERIFICATION TEST - VER 1. No → Test Complete.	All

Symptom:

LOOPBACK FAILURE

POSSIBLE CAUSES
CMTC/EVIC MODULE

TEST	ACTION	APPLICABILITY
1	Turn the ignition on. With the DRBIII®, erase DTCs. Turn the ignition off, and wait approximately 15 seconds. With the DRBIII®, read DTCs. Did this DTC reset? Yes → Replace the CMTC or EVIC in accordance with the Service Information. Perform BODY VERIFICATION TEST - VER 1. No → Test Complete.	All

Symptom:
NO BCM MESSAGES RECEIVED

POSSIBLE CAUSES
DTC PRESENT
NO RESPONSE - PCI BUS - BCM
CMTC/EVIC MODULE

TEST	ACTION	APPLICABILITY
1	With the DRBIII®, erase DTCs. Cycle the ignition and wait approximately 1 minute. With the DRBIII®, read DTCs. Did this DTC reset? Yes → Go To 2 No → The condition is not present at this time. Monitor DRBIII® parameters while wiggling the related wire harness. refer to any Technical Service Bulletins (TSB) that may apply. Visually inspect the related wiring harness and connector terminals. Perform BODY VERIFICATION TEST - VER 1.	All
2	Turn the ignition on. With the DRBIII®, attempt to I/D or communicate with the BCM. Was the DRBIII® able to communicate with the BCM? Yes → Replace the CMTC or EVIC in accordance with the Service Information. Perform BODY VERIFICATION TEST - VER 1. No → Refer to the COMMUNICATION category and perform the appropriate symptom. Perform BODY VERIFICATION TEST - VER 1.	All

Symptom:
NO FCM MESSAGES RECEIVED

POSSIBLE CAUSES
DTC PRESENT
NO RESPONSE - PCI BUS - FCM
CMTC/EVIC MODULE

TEST	ACTION	APPLICABILITY
1	With the DRBIII®, erase DTCs. Cycle the ignition and wait approximately 1 minute. With the DRBIII®, read DTCs. Did this DTC reset? Yes → Go To 2 No → The condition is not present at this time. Monitor DRBIII® parameters while wiggling the related wire harness. refer to any Technical Service Bulletins (TSB) that may apply. Visually inspect the related wiring harness and connector terminals. Perform BODY VERIFICATION TEST - VER 1.	All
2	Turn the ignition on. With the DRBIII®, attempt to I/D or communicate with the FCM. Was the DRBIII® able to communicate with the FCM? Yes → Replace the CMTC or EVIC in accordance with the Service Information. Perform BODY VERIFICATION TEST - VER 1. No → Refer to the COMMUNICATION category and perform the appropriate symptom. Perform BODY VERIFICATION TEST - VER 1.	All

Symptom:
NO PCM MESSAGES RECEIVED

POSSIBLE CAUSES
DTC PRESENT
NO RESPONSE - PCI BUS - PCM
CMTC/EVIC MODULE

TEST	ACTION	APPLICABILITY
1	With the DRBIII®, erase DTCs. Cycle the ignition and wait approximately 15 seconds. With the DRBIII®, read DTCs. Did this DTC reset? Yes → Go To 2 No → The condition is not present at this time. Monitor DRBIII® parameters while wiggling the related wire harness. Refer to any Technical Service Bulletins (TSB) that may apply. Visually inspect the related wiring harness and connector terminals. Perform BODY VERIFICATION TEST - VER 1.	All
2	Turn the ignition on. With the DRBIII®, enter Body Computer, System Tests, then PCM Monitor. Does the DRBIII® display PCM Active on the Bus? Yes → Replace the CMTC or EVIC in accordance with the Service Information. Perform BODY VERIFICATION TEST - VER 1. No → Refer to the COMMUNICATION category and perform the appropriate symptom. Perform BODY VERIFICATION TEST - VER 1.	All

Symptom:
NO TCM MESSAGES RECEIVED

POSSIBLE CAUSES
DTC PRESENT
NO RESPONSE - PCI BUS - TCM
CMTC/EVIC MODULE

TEST	ACTION	APPLICABILITY
1	With the DRBIII®, erase DTCs. Cycle the ignition and wait approximately 1 minute. With the DRBIII®, read DTCs. Did this DTC reset? Yes → Go To 2 No → The condition is not present at this time. Monitor DRBIII® parameters while wiggling the related wire harness. Refer to any Technical Service Bulletins (TSB) that may apply. Visually inspect the related wiring harness and connector terminals. Perform BODY VERIFICATION TEST - VER 1.	All
2	Turn the ignition on. With the DRBIII®, attempt to I/D or communicate with the TCM. Was the DRBIII® able to communicate with the TCM? Yes → Replace the CMTC or EVIC in accordance with the Service Information. Perform BODY VERIFICATION TEST - VER 1. No → Refer to the COMMUNICATION category and perform the appropriate symptom. Perform BODY VERIFICATION TEST - VER 1.	All

Symptom:
OTIS MODULE MESSAGE MISMATCH

When Monitored and Set Condition:

OTIS MODULE MESSAGE MISMATCH

When Monitored: With the ignition on.

Set Condition: BCM has learned EC Mirror but the vehicle is Not equipped with EC Mirror.

POSSIBLE CAUSES
INTERMITTENT CONDITION
EVIC COMMUNICATION
CMTC/EVIC MODULE
BODY CONTROL MODULE

TEST	ACTION	APPLICABILITY
1	**NOTE: All communication DTC(s) that may have set along with this DTC must be diagnosed before continuing.** **NOTE: If the DTC EC Mirror Day/Night Line Fault is present in the EVIC along with this DTC, diagnose the EC Mirror Day/Night Line Fault first before continuing.** With the DRBIII®, erase the DTC. Cycle the ignition on and off several times, leaving the ignition on for at least 15 seconds. With the DRBIII®, read DTCs. Did the DTC OTIS Module Message Mismatch reset? Yes → Go To 2 No → Go To 4	All
2	Turn the ignition on. With the DRBIII®, attempt to communicate with the CMTC/EVIC Module. Can communication be established with the CMTC/EVIC Module? Yes → Go To 3 No → Refer to the Communication Category and perform the appropriate symptom. Perform BODY VERIFICATION TEST - VER 1.	All

OTIS MODULE MESSAGE MISMATCH — Continued

TEST	ACTION	APPLICABILITY
3	Turn the ignition off. Install a substitute CMTC/EVIC Module in place of the original module. With the DRBIII®, erase DTCs. Turn the ignition on. Cycle the ignition on and off, leaving the ignition in the on position for at least 15 seconds each time. With the DRBIII®, read DTCs. Did the DTC reset? Yes → Replace the Body Control Module. Perform BODY VERIFICATION TEST - VER 1. No → Replace the CMTC/EVIC Module. Perform BODY VERIFICATION TEST - VER 1.	All
4	**WARNING: WHEN THE ENGINE IS OPERATING, DO NOT STAND IN A DIRECT LINE WITH THE FAN. DO NOT PUT YOUR HANDS NEAR THE PULLEYS, BELTS OR FAN. DO NOT WEAR LOOSE CLOTHING.** **NOTE: The conditions that set the DTC are not present at this time. The following list may help in identifying the intermittent condition.** With the engine running at normal operating temperature, monitor the DRB parameters related to the DTC while wiggling the wiring harness. Look for parameter values to change and/or a DTC to set. Refer to any Technical Service Bulletins (TSB) that may apply. Visually inspect the related wiring harness. Look for any chafed, pierced, pinched, or partially broken wires. Visually inspect the related wiring harness connectors. Look for broken, bent, pushed out, or corroded terminals. Were any of the above conditions present? Yes → Repair as necessary Perform BODY VERIFICATION TEST - VER 1. No → Test Complete.	All

Symptom:
OTIS MODULE MESSAGE MISMATCH (DIESEL)

When Monitored and Set Condition:

OTIS MODULE MESSAGE MISMATCH (DIESEL)

When Monitored: With the ignition on.

Set Condition: FCM has learned EC Mirror but the vehicle is Not equipped with EC Mirror.

POSSIBLE CAUSES
INTERMITTENT CONDITION
CMTC/EVIC COMMUNICATION
CMTC/EVIC MODULE
FRONT CONTROL MODULE

TEST	ACTION	APPLICABILITY
1	**NOTE: All communication DTC(s) that may have set along with this DTC must diagnosed before continuing.** **NOTE: If the DTC EC Mirror Day/Night Line Fault is present in the EVIC along with this DTC, diagnose the EC Mirror Day/Night Line Fault first before continuing.** With the DRBIII®, erase the DTC. Cycle the ignition on and off several times, leaving the ignition on for at least 15 seconds. With the DRBIII®, read DTCs. Did the DTC OTIS Module Message Mismatch reset? Yes → Go To 2 No → Go To 4	All
2	Turn the ignition on. With the DRBIII®, attempt to communicate with the CMTC/EVIC Module. Can communication be established with the CMTC/EVIC Module? Yes → Go To 3 No → Refer to the Communication Category and perform the appropriate symptom. Perform BODY VERIFICATION TEST - VER 1.	All

OTIS MODULE MESSAGE MISMATCH (DIESEL) — Continued

TEST	ACTION	APPLICABILITY
3	Turn the ignition off. Install a substitute CMTC/EVIC Module in place of the original module. With the DRBIII®, erase DTCs. Turn the ignition on. Cycle the ignition on and off, leaving the ignition in the on position for at least 15 seconds each time. With the DRBIII®, read DTCs. Did the DTC reset? Yes → Replace the Front Control Module. Perform BODY VERIFICATION TEST - VER 1. No → Replace the CMTC/EVIC Module. Perform BODY VERIFICATION TEST - VER 1.	All
4	**WARNING: WHEN THE ENGINE IS OPERATING, DO NOT STAND IN A DIRECT LINE WITH THE FAN. DO NOT PUT YOUR HANDS NEAR THE PULLEYS, BELTS OR FAN. DO NOT WEAR LOOSE CLOTHING.** **NOTE: The conditions that set the DTC are not present at this time. The following list may help in identifying the intermittent condition.** With the engine running at normal operating temperature, monitor the DRB parameters related to the DTC while wiggling the wiring harness. Look for parameter values to change and/or a DTC to set. Refer to any Technical Service Bulletins (TSB) that may apply. Visually inspect the related wiring harness. Look for any chafed, pierced, pinched, or partially broken wires. Visually inspect the related wiring harness connectors. Look for broken, bent, pushed out, or corroded terminals. Were any of the above conditions present? Yes → Repair as necessary Perform BODY VERIFICATION TEST - VER 1. No → Test Complete.	All

Symptom:

***REPAIRING CMTC DISPLAYS DOUBLE DASH (- -) IN TEMP DISPLAY**

POSSIBLE CAUSES
NO RESPONSE - PCI BUS - POWERTRAIN CONTROL MODULE
CMTC BUS MESSAGE FAILURE
COMPASS MINI-TRIP COMPUTER
AMBIENT TEMPERATURE SENSOR
PCM AMBIENT AIR TEMPERATURE SENSOR DTC PRESENT
CMTC INTERNAL

TEST	ACTION	APPLICABILITY
1	Turn the ignition on. With the DRBIII®, select System Monitors, J1850 Module Scan. Does the DRBIII® display PCM on the BUS? Yes → Go To 2 No → Refer to the COMMUNICATIONS category and perform the appropriate symptom.	All
2	Turn the ignition on. With the DRBIII®, select Body, Compass Mini-Trip, System Tests, then Auto Self Test. Does the DRBIII® display TEST FAILED: Bus Message Failure? Yes → Refer to the COMMUNICATIONS category and perform the appropriate symptom. No → Go To 3	All
3	Turn the ignition on. With the DRBIII®, select Body, Compass Mini-Trip, System Tests, then Auto Self Test. Does the DRBIII® display TEST FAILED: Internal EVIC Failure? Yes → Replace the Compass Mini-Trip Computer in accordance with the Service Information. Perform BODY VERIFICATION TEST - VER 1. No → Go To 4	All
4	Turn the ignition on. With the DRBIII®, read Powertrain Control Module DTCs. Does the DRBIII® display any Ambient Air Temperature Sensor related DTCs? Yes → Refer to the ENGINE category and perform the appropriate symptom. No → Replace the Compass Mini-Trip Computer in accordance with the Service Information Perform BODY VERIFICATION TEST - VER 1.	All

Symptom:
DISPLAY VOLTAGE SUPPLY SHORT TO GROUND

When Monitored and Set Condition:

DISPLAY VOLTAGE SUPPLY SHORT TO GROUND

When Monitored: With the ignition on.

Set Condition: A Park Assist Display Supply circuit short to ground is detected.

POSSIBLE CAUSES
INTERMITTENT CONDITION
DISPLAY SUPPLY CIRCUIT SHORT TO GROUND
PARK ASSIST MODULE

TEST	ACTION	APPLICABILITY
1	With the DRBIII®, Erase DTCs. Cycle the ignition off for at least 1 minute. Turn the ignition on. With the DRBIII® under System Tests, perform the Self Test. With the DRBIII® read DTCs. Does this DTC reset? Yes → Go To 2 No → Go To 4	All
2	Turn the ignition off. Disconnect the Park Assist Module harness connector. Disconnect the Park Assist Display harness connector. Measure the resistance between ground and the Park Assist Display Supply circuit. Is the resistance below 5.0 ohms? Yes → Repair the Park Assist Display Supply circuit for a short to ground. Perform BODY VERIFICATION TEST - VER 1. No → Go To 3	All
3	Turn the ignition off. Replace the Park Assist Display in accordance with the Service Information. Turn the ignition on. With the DRBIII® under System Tests, perform the Self Test. With the DRBIII®, Erase DTCs. With the DRBIII® read DTCs. Does this DTC reset? Yes → Replace the Park Assist Module in accordance with the Service Information. Perform BODY VERIFICATION TEST - VER 1. No → Test Complete.	All

DISPLAY VOLTAGE SUPPLY SHORT TO GROUND — Continued

TEST	ACTION	APPLICABILITY
4	The conditions necessary to set this DTC are not present at this time. Using the wiring diagrams/schematics as a guide, inspect the wiring and connectors. While monitoring the DRBIII® data relative to this circuit, wiggle test the wiring and connectors. Look for the data to change or for the DTC to reset during the wiggle test. Were any problems found? Yes → Repair as necessary. Perform BODY VERIFICATION TEST - VER 1. No → Test Complete.	All

Symptom:
MODULE CALIBRATION MISMATCH

When Monitored and Set Condition:

MODULE CALIBRATION MISMATCH

When Monitored: With the ignition on.

Set Condition: An EEPROM Error (cksum mismatch) - calibration data corrupted - is detected.

POSSIBLE CAUSES
INTERMITTENT CONDITION
PARK ASSIST MODULE

TEST	ACTION	APPLICABILITY
1	With the DRBIII®, Erase DTCs. Cycle the ignition off for at least 1 minute. Turn the ignition on. With the DRBIII® under System Tests, perform the Self Test. With the DRBIII® read DTCs. Does this DTC reset? Yes → The Park Assist Module is reporting an internal error. Refer to any TSBs that apply and reflash or replace the module in accordance with the Service Information. Perform BODY VERIFICATION TEST - VER 1. No → Go To 2	All
2	The conditions necessary to set this DTC are not present at this time. Using the wiring diagrams/schematics as a guide, inspect the wiring and connectors. While monitoring the DRBIII® data relative to this circuit, wiggle test the wiring and connectors. Look for the data to change or for the DTC to reset during the wiggle test. Were any problems found? Yes → Repair as necessary. Perform BODY VERIFICATION TEST - VER 1. No → Test Complete.	All

Symptom:
MODULE RAM ERROR

When Monitored and Set Condition:

MODULE RAM ERROR

When Monitored: With the ignition on, at module start up.

Set Condition: A RAM Error is detected.

POSSIBLE CAUSES
INTERMITTENT CONDITION
PARK ASSIST MODULE

TEST	ACTION	APPLICABILITY
1	With the DRBIII®, Erase DTCs. Cycle the ignition off for at least 1 minute. Turn the ignition on. With the DRBIII® read DTCs. Does this DTC reset? Yes → The Park Assist Module is reporting an internal error. Refer to any TSBs that apply and reflash or replace the module in accordance with the Service Information. Perform BODY VERIFICATION TEST - VER 1. No → Go To 2	All
2	The conditions necessary to set this DTC are not present at this time. Using the wiring diagrams/schematics as a guide, inspect the wiring and connectors. While monitoring the DRBIII® data relative to this circuit, wiggle test the wiring and connectors. Look for the data to change or for the DTC to reset during the wiggle test. Were any problems found? Yes → Repair as necessary. Perform BODY VERIFICATION TEST - VER 1. No → Test Complete.	All

Symptom:
MODULE SOFTWARE MISMATCH

When Monitored and Set Condition:

MODULE SOFTWARE MISMATCH

When Monitored: With the ignition on, at module start up.

Set Condition: A Flash Error (cksum mismatch) - software corrupted - is detected.

POSSIBLE CAUSES
INTERMITTENT CONDITION
PARK ASSIST MODULE

TEST	ACTION	APPLICABILITY
1	With the DRBIII®, Erase DTCs. Cycle the ignition off for at least 1 minute. Turn the ignition on. With the DRBIII® read DTCs. Does this DTC reset? Yes → The Park Assist Module is reporting an internal error. Refer to any TSBs that apply and reflash or replace the module in accordance with the Service Information. Perform BODY VERIFICATION TEST - VER 1. No → Go To 2	All
2	The conditions necessary to set this DTC are not present at this time. Using the wiring diagrams/schematics as a guide, inspect the wiring and connectors. While monitoring the DRBIII® data relative to this circuit, wiggle test the wiring and connectors. Look for the data to change or for the DTC to reset during the wiggle test. Were any problems found? Yes → Repair as necessary. Perform BODY VERIFICATION TEST - VER 1. No → Test Complete.	All

Symptom List:

NO BCM DIMMING MESSAGES RECEIVED
NO BCM ODOMETER MESSAGES RECEIVED
NO BCM PARK BRAKE MESSAGES RECEIVED

Test Note: All symptoms listed above are diagnosed using the same tests. The title for the tests will be NO BCM DIMMING MESSAGES RECEIVED.

When Monitored and Set Condition:

NO BCM DIMMING MESSAGES RECEIVED

When Monitored: With the ignition on.

Set Condition: The Dimming and Lamp Code message from the BCM is missing.

NO BCM ODOMETER MESSAGES RECEIVED

When Monitored: With the ignition on.

Set Condition: The Vehicle Odometer message from the BCM is missing.

NO BCM PARK BRAKE MESSAGES RECEIVED

When Monitored: With the ignition on.

Set Condition: The Parking Brake Status message from the BCM is missing.

POSSIBLE CAUSES
INTERMITTENT CONDITION
NO COMMUNICATION WITH BCM
PARK ASSIST MODULE

TEST	ACTION	APPLICABILITY
1	With the DRBIII®, Erase DTCs. Cycle the ignition off for at least 1 minute. Turn the ignition on. With the DRBIII® under System Tests, perform the Self Test. With the DRBIII® read DTCs. Does this DTC reset? Yes → Go To 2 No → Go To 4	All

NO BCM DIMMING MESSAGES RECEIVED — Continued

TEST	ACTION	APPLICABILITY
2	Turn the ignition on. With the DRBIII® under Monitors, refer to the Odo Msg Present, Dimming Msg Present, and Park Brake Msg Present status under Park Assist BUS INFO. Does the DRBIII® indicate "Yes" that any of the messages are present? Yes → Replace the Park Assist Module in accordance with the Service Information. Perform BODY VERIFICATION TEST - VER 1. No → Go To 3	All
3	Turn the ignition on. With the DRBIII®, attempt to establish communication with the BCM. Can the DRBIII® establish communication with the BCM? Yes → Replace the Park Assist Module in accordance with the Service Information. Perform BODY VERIFICATION TEST - VER 1. No → Refer to the Communication category for the related symptom(s). Perform BODY VERIFICATION TEST - VER 1.	All
4	The conditions necessary to set this DTC are not present at this time. Using the wiring diagrams/schematics as a guide, inspect the wiring and connectors. While monitoring the DRBIII® data relative to this circuit, wiggle test the wiring and connectors. Look for the data to change or for the DTC to reset during the wiggle test. Were any problems found? Yes → Repair as necessary. Perform BODY VERIFICATION TEST - VER 1. No → Test Complete.	All

Symptom List:

NO PCM DISTANCE MESSAGES RECEIVED
NO PCM MESSAGES RECEIVED

Test Note: All symptoms listed above are diagnosed using the same tests. The title for the tests will be NO PCM DISTANCE MESSAGES RECEIVED.

When Monitored and Set Condition:

NO PCM DISTANCE MESSAGES RECEIVED

When Monitored: With the ignition on.

Set Condition: The Distance Pulse message from NGC Engine is missing.

NO PCM MESSAGES RECEIVED

When Monitored: With the ignition on.

Set Condition: The Engine RPM, Vehicle Speed, and MAP message from NGC Engine is missing.

POSSIBLE CAUSES
INTERMITTENT CONDITION
NO COMMUNICATION WITH PCM
PCI BUS CKT OPEN TO PARK ASSIST MODULE
PARK ASSIST MODULE

TEST	ACTION	APPLICABILITY
1	With the DRBIII®, Erase DTCs. Cycle the ignition off for at least 1 minute. Turn the ignition on. With the DRBIII® under System Tests, perform the Self Test. With the DRBIII® read DTCs. Does this DTC reset? Yes → Go To 2 No → Go To 5	All
2	Turn the ignition on. With the DRBIII® under Monitors, refer to the NGC Msg Present status under Park Assist BUS INFO. Does the DRBIII® indicate that ″Yes″ the message is present? Yes → Inspect the wiring and connectors relative to this circuit. If any problems are found, repair as necessary. Otherwise, replace the Park Assist Module in accordance with the Service Information. Perform BODY VERIFICATION TEST - VER 1. No → Go To 3	All

NO PCM DISTANCE MESSAGES RECEIVED — Continued

TEST	ACTION	APPLICABILITY
3	Turn the ignition on. With the DRBIII®, attempt to establish communication with the PCM. Can the DRBIII® establish communication with the PCM? Yes → Inspect the wiring and connectors relative to this circuit. If any problems are found, repair as necessary. Otherwise, replace the Park Assist Module in accordance with the Service Information. Perform BODY VERIFICATION TEST - VER 1. No → Go To 4	All
4	Turn the ignition off. Disconnect the Park Assist Module harness connector. Disconnect the PCM harness connector. Note: If equipped with NGC follow the caution below. **CAUTION: DO NOT PROBE THE PCM HARNESS CONNECTORS. PROBING THE PCM HARNESS CONNECTORS WILL DAMAGE THE PCM TERMINALS RESULTING IN POOR TERMINAL TO PIN CONNECTION. INSTALL MILLER SPECIAL TOOL #8815 TO PERFORM DIAGNOSIS.** Measure the resistance of the PCI Bus circuit between the Park Assist Module harness connector and the PCM harness connector. Is the resistance below 5.0 ohms? Yes → Inspect the wiring and connectors relative to this circuit. If any problems are found, repair as necessary. Otherwise, replace the Park Assist Module in accordance with the Service Information. Perform BODY VERIFICATION TEST - VER 1. No → Repair the PCI Bus circuit for an open. Perform BODY VERIFICATION TEST - VER 1.	All
5	The conditions necessary to set this DTC are not present at this time. Using the wiring diagrams/schematics as a guide, inspect the wiring and connectors. While monitoring the DRBIII® data relative to this circuit, wiggle test the wiring and connectors. Look for the data to change or for the DTC to reset during the wiggle test. Were any problems found? Yes → Repair as necessary. Perform BODY VERIFICATION TEST - VER 1. No → Test Complete.	All

Symptom:
NO TCM MESSAGES RECEIVED

When Monitored and Set Condition:

NO TCM MESSAGES RECEIVED

When Monitored: With the ignition on.

Set Condition: The PRNDL display or Manual Shift Data message from NGC Transmission is missing.

POSSIBLE CAUSES
INTERMITTENT CONDITION
NO COMMUNICATION WITH TCM
PCI BUS CKT OPEN TO PARK ASSIST MODULE
PARK ASSIST MODULE

TEST	ACTION	APPLICABILITY
1	With the DRBIII®, Erase DTCs. Cycle the ignition off for at least 1 minute. Turn the ignition on. With the DRBIII® under System Tests, perform the Self Test. With the DRBIII® read DTCs. Does this DTC reset? Yes → Go To 2 No → Go To 5	All
2	Turn the ignition on. With the DRBIII® under Monitors, refer to the Trans Msg Present status under Park Assist BUS INFO. Does the DRBIII® indicate that ″Yes″ the message is present? Yes → Replace the Park Assist Module in accordance with the Service Information. Perform BODY VERIFICATION TEST - VER 1. No → Go To 3	All
3	Turn the ignition on. With the DRBIII®, attempt to establish communication with the TCM. Can the DRBIII establish communication with the TCM? Yes → Replace the Park Assist Module in accordance with the Service Information. Perform BODY VERIFICATION TEST - VER 1. No → Go To 4	All

NO TCM MESSAGES RECEIVED — Continued

TEST	ACTION	APPLICABILITY
4	Turn the ignition off. Disconnect the Park Assist Module harness connector. Disconnect the TCM harness connector. Measure the resistance of the PCI Bus circuit between the Park Assist Module harness connector and the TCM harness connector. Is the resistance below 5.0 ohms? Yes → Replace the Park Assist Module in accordance with the Service Information. Perform BODY VERIFICATION TEST - VER 1. No → Repair the PCI Bus circuit for an open. Perform BODY VERIFICATION TEST - VER 1.	All
5	The conditions necessary to set this DTC are not present at this time. Using the wiring diagrams/schematics as a guide, inspect the wiring and connectors. While monitoring the DRBIII® data relative to this circuit, wiggle test the wiring and connectors. Look for the data to change or for the DTC to reset during the wiggle test. Were any problems found? Yes → Repair as necessary. Perform BODY VERIFICATION TEST - VER 1. No → Test Complete.	All

Symptom List:

PCI BUS INTERNAL FAULT
PCI BUS SHORT TO BATTERY
PCI BUS SHORT TO GROUND

Test Note: All symptoms listed above are diagnosed using the same tests. The title for the tests will be PCI BUS INTERNAL FAULT.

When Monitored and Set Condition:

PCI BUS INTERNAL FAULT

When Monitored: With the ignition on.

Set Condition: A J1850 Bus internal fault is detected.

PCI BUS SHORT TO BATTERY

When Monitored: With the ignition on.

Set Condition: A J1850 Bus short to battery is detected.

PCI BUS SHORT TO GROUND

When Monitored: With the ignition on.

Set Condition: A J1850 Bus short to ground is detected.

POSSIBLE CAUSES
PCI BUS INTERMITTENT CONDITION

PCI BUS INTERNAL FAULT — Continued

TEST	ACTION	APPLICABILITY
1	**NOTE: When this DTC is active, the DRB cannot communicate with any modules on the vehicle except the PCM or ECM.** **NOTE: With the DRBIII®, Erase DTCs. If this DTC resets and the DRB can establish communication with the Park Assist Module, replace the module.** **WARNING: WHEN THE ENGINE IS OPERATING, DO NOT STAND IN A DIRECT LINE WITH THE FAN. DO NOT PUT YOUR HANDS NEAR THE PULLEYS, BELTS OR FAN. DO NOT WEAR LOOSE CLOTHING.** **NOTE: The conditions that set the DTC are not present at this time. Attempt to duplicate the condition that caused the complete bus failure.** With the engine running at normal operating temperature, wiggle test the wiring harness and connectors while monitoring the DRBIII®. Look for related data to change or for the DTC to reset. Refer to any Technical Service Bulletins (TSB) that may apply. Inspect the related wiring harness. Look for any chafed, pierced, pinched, or partially broken wires. Inspect the related wiring harness connectors. Look for broken, bent, pushed out, or corroded terminals. Were any of the above conditions present? Yes → Repair as necessary. Perform BODY VERIFICATION TEST - VER 1. No → Test Complete.	All

Symptom List:

REAR DISPLAY COMMUNICATION FAULT
REAR DISPLAY LED OR SPEAKER FAULT

Test Note: All symptoms listed above are diagnosed using the same tests. The title for the tests will be REAR DISPLAY COMMUNICATION FAULT.

When Monitored and Set Condition:

REAR DISPLAY COMMUNICATION FAULT

When Monitored: With the ignition on.

Set Condition: A data line or communication fault is detected.

REAR DISPLAY LED OR SPEAKER FAULT

When Monitored: With the ignition on.

Set Condition: Negative self-diagnostic for LED/speaker.

POSSIBLE CAUSES
INTERMITTENT CONDITION
PARK ASSIST DISPLAY SIGNAL CIRCUIT SHORT TO GROUND
PARK ASSIST DISPLAY CIRCUIT(S) OPEN
PARK ASSIST DISPLAY CIRCUIT(S) SHORT TO VOLTAGE
PARK ASSIST MODULE

TEST	ACTION	APPLICABILITY
1	With the DRBIII®, Erase DTCs. Cycle the ignition off for at least 1 minute. Turn the ignition on. With the DRBIII® under System Tests, perform the Self Test. With the DRBIII® read DTCs. Does this DTC reset? Yes → Go To 2 No → Go To 6	All

REAR DISPLAY COMMUNICATION FAULT — Continued

TEST	ACTION	APPLICABILITY
2	Turn the ignition off. Disconnect the Park Assist Display harness connector. Disconnect the Park Assist Module harness connector. Measure the resistance between ground and the Park Assist Display Signal circuit. Is the resistance below 5.0 ohms? Yes → Repair the Park Assist Display Signal circuit for a short to ground. Perform BODY VERIFICATION TEST - VER 1. No → Go To 3	All
3	Turn the ignition off. Disconnect the Park Assist Display harness connector. Disconnect the Park Assist Module harness connector. Measure the resistance of the Park Assist Display Signal circuit. Measure the resistance of the Park Assist Display Supply circuit. Measure the resistance of the Ground circuit. Is the resistance above 5.0 ohms for any circuit(s)? Yes → Repair the circuit(s) for an open. Perform BODY VERIFICATION TEST - VER 1. No → Go To 4	All
4	Turn the ignition off. Disconnect the Park Assist Display harness connector. Disconnect the Park Assist Module harness connector. Turn the ignition on. Measure the voltage of the Park Assist Display Signal circuit. Measure the voltage of the Park Assist Display Supply circuit. Measure the voltage of the Ground circuit. Is there voltage present on any of these circuits? Yes → Repair the circuit(s) for a short to voltage. Perform BODY VERIFICATION TEST - VER 1. No → Go To 5	All
5	Turn the ignition off. Replace the Park Assist Display in accordance with the Service Information. Turn the ignition on. With the DRBIII®, Erase DTCs. With the DRBIII® under System Tests, perform the Self Test. With the DRBIII® read DTCs. Does this DTC reset. Yes → Replace the Park Assist Module in accordance with the Service Information. Perform BODY VERIFICATION TEST - VER 1. No → Test Complete.	All

REAR DISPLAY COMMUNICATION FAULT — Continued

TEST	ACTION	APPLICABILITY
6	The conditions necessary to set this DTC are not present at this time. Using the wiring diagrams/schematics as a guide, inspect the wiring and connectors. While monitoring the DRBIII® data relative to this circuit, wiggle test the wiring and connectors. Look for the data to change or for the DTC to reset during the wiggle test. Were any problems found? Yes → Repair as necessary. Perform BODY VERIFICATION TEST - VER 1. No → Test Complete.	All

Symptom List:

SENSOR 1 FAILURE
SENSOR 2 FAILURE
SENSOR 3 FAILURE
SENSOR 4 FAILURE

Test Note: All symptoms listed above are diagnosed using the same tests. The title for the tests will be SENSOR 1 FAILURE.

When Monitored and Set Condition:

SENSOR 1 FAILURE

When Monitored: With rear sensors active.

Set Condition: A Sensor Settling Time failure or a Sensor Verify failure is detected.

SENSOR 2 FAILURE

When Monitored: With rear sensors active.

Set Condition: A Sensor Settling Time failure or a Sensor Verify failure is detected.

SENSOR 3 FAILURE

When Monitored: With rear sensors active.

Set Condition: A Sensor Settling Time failure or a Sensor Verify failure is detected.

SENSOR 4 FAILURE

When Monitored: With rear sensors active.

Set Condition: A Sensor Settling Time failure or a Sensor Verify failure is detected.

POSSIBLE CAUSES
INTERMITTENT CONDITION
PARK ASSIST SENSOR
PARK ASSIST MODULE

SENSOR 1 FAILURE — Continued

TEST	ACTION	APPLICABILITY
1	**NOTE: Make sure that the rear bumper is free of dirt and debris to keep the system operating properly.** **NOTE: Jackhammers, large trucks, and other vibrations could affect the performance of the system.** With the DRBIII®, Erase DTCs. Cycle the ignition off for at least 1 minute. Use the Service Information as a guide to activate the Park Assist System. Move an object into range of the Sensor that set this DTC. Turn the ignition on. With the brake applied, move the gear selector to the neutral position. **NOTE: The system is active only when the vehicle is in reverse or neutral for vehicle speeds less than 16 Kmh (10 mph). If the vehicle Parking/Emergency Brake is applied, the system is deactivated.** With the DRBIII® under Inputs/Outputs, read the Sensors input state. The state must indicate ″Active″ for the diagnostic to run. With the DRBIII®, read DTCs. Does this DTC reset? Yes → Go To 2 No → Go To 3	All
2	The Park Assist Module has detected a Park Assist Sensor failure. Use the chart below to identify the sensor: Sensor 1 is the rear outer right sensor. Sensor 2 is the rear inner right sensor. Sensor 3 is the rear inner left sensor. Sensor 4 is the rear outer left sensor. Replace the applicable Sensor in accordance with the Service information. With the DRBIII®, Erase DTCs. Cycle the ignition off for at least one minute. Use the Service Information as a guide to activate the Park Assist System. Move an object into range of the Sensor that was replaced. Turn the ignition on. With the brake applied, move the gear selector to the neutral position. **NOTE: The system is active only when the vehicle is in reverse or neutral for vehicle speeds less than 16 Kmh (10 mph). If the vehicle Parking/Emergency Brake is applied, the system is deactivated.** With the DRBIII® under Inputs/Outputs, read the Sensors input state. The state must indicate ″Active″ for the diagnostic to run. With the DRBIII®, read DTCs. Does this DTC reset? Yes → Replace the Park Assist Module in accordance with the Service Information. Perform BODY VERIFICATION TEST - VER 1. No → Test Complete.	All
3	The conditions necessary to set this DTC are not present at this time. Using the wiring diagrams/schematics as a guide, inspect the wiring and connectors. While monitoring the DRBIII® data relative to this circuit, wiggle test the wiring and connectors. Look for the data to change or for the DTC to reset during the wiggle test. Were any problems found? Yes → Repair as necessary. Perform BODY VERIFICATION TEST - VER 1. No → Test Complete.	All

Symptom List:

SENSOR 1 GROUND CIRCUIT OPEN
SENSOR 2 GROUND CIRCUIT OPEN
SENSOR 3 GROUND CIRCUIT OPEN
SENSOR 4 GROUND CIRCUIT OPEN

Test Note: All symptoms listed above are diagnosed using the same tests. The title for the tests will be SENSOR 1 GROUND CIRCUIT OPEN.

When Monitored and Set Condition:

SENSOR 1 GROUND CIRCUIT OPEN

When Monitored: With rear sensors active.

Set Condition: An open in the Sensor 1 ground circuit is detected.

SENSOR 2 GROUND CIRCUIT OPEN

When Monitored: With rear sensors active.

Set Condition: An open in the Sensor 2 ground circuit is detected.

SENSOR 3 GROUND CIRCUIT OPEN

When Monitored: With rear sensors active.

Set Condition: An open in the Sensor 3 ground circuit is detected.

SENSOR 4 GROUND CIRCUIT OPEN

When Monitored: With rear sensors active.

Set Condition: An open in the Sensor 4 ground circuit is detected.

POSSIBLE CAUSES
INTERMITTENT CONDITION
SENSOR GROUND CIRCUIT OPEN
PARK ASSIST SENSOR
PARK ASSIST MODULE

SENSOR 1 GROUND CIRCUIT OPEN — Continued

TEST	ACTION	APPLICABILITY
1	**NOTE: Make sure that the rear bumper is free of dirt and debris to keep the system operating properly.** **NOTE: Jackhammers, large trucks, and other vibrations could affect the performance of the system.** With the DRBIII®, Erase DTCs. Cycle the ignition off for at least 1 minute. Use the Service Information as a guide to activate the Park Assist System. Move an object into range of the Sensor that set this DTC. Turn the ignition on. With the brake applied, move the gear selector to the neutral position. **NOTE: The system is active only when the vehicle is in reverse or neutral for vehicle speeds less than 16 Kmh (10 mph). If the vehicle Parking/Emergency Brake is applied, the system is deactivated.** With the DRBIII® under Inputs/Outputs, read the Sensors input state. The state must indicate ″Active″ for the diagnostic to run. With the DRBIII®, read DTCs. Does this DTC reset? Yes → Go To 2 No → Go To 4	All
2	Turn the ignition off. Disconnect the Park Assist Module harness connector. Use the chart below to identify the sensor: Sensor 1 is the rear outer right sensor. Sensor 2 is the rear inner right sensor. Sensor 3 is the rear inner left sensor. Sensor 4 is the rear outer left sensor. Disconnect the Park Assist Sensor harness connector. Measure the resistance of the Sensor ground circuit. Is the resistance above 5.0 ohms? Yes → Repair the Sensor ground circuit for an open. Perform BODY VERIFICATION TEST - VER 1. No → Go To 3	All

SENSOR 1 GROUND CIRCUIT OPEN — Continued

TEST	ACTION	APPLICABILITY
3	Use the chart below to identify the sensor: Sensor 1 is the rear outer right sensor. Sensor 2 is the rear inner right sensor. Sensor 3 is the rear inner left sensor. Sensor 4 is the rear outer left sensor. Replace the applicable Sensor in accordance with the Service information. With the DRBIII®, Erase DTCs. Cycle the ignition off for at least one minute. Use the Service Information as a guide to activate the Park Assist System. Move an object into range of the Sensor that was replaced. Turn the ignition on. With the brake applied, move the gear selector to the neutral position. **NOTE: The system is active only when the vehicle is in reverse or neutral for vehicle speeds less than 16 Kmh (10 mph). If the vehicle Parking/Emergency Brake is applied, the system is deactivated.** With the DRBIII® under Inputs/Outputs, read the Sensors input state. The state must indicate ″Active″ for the diagnostic to run. With the DRBIII®, read DTCs. Does this DTC reset? Yes → Replace the Park Assist Module in accordance with the Service Information. Perform BODY VERIFICATION TEST - VER 1. No → Test Complete.	All
4	The conditions necessary to set this DTC are not present at this time. Using the wiring diagrams/schematics as a guide, inspect the wiring and connectors. While monitoring the DRBIII® data relative to this circuit, wiggle test the wiring and connectors. Look for the data to change or for the DTC to reset during the wiggle test. Were any problems found? Yes → Repair as necessary. Perform BODY VERIFICATION TEST - VER 1. No → Test Complete.	All

Symptom List:

SENSOR 1 SIGNAL CIRCUIT SHORT TO VOLTAGE
SENSOR 2 SIGNAL CIRCUIT SHORT TO VOLTAGE
SENSOR 3 SIGNAL CIRCUIT SHORT TO VOLTAGE
SENSOR 4 SIGNAL CIRCUIT SHORT TO VOLTAGE

Test Note: All symptoms listed above are diagnosed using the same tests. The title for the tests will be SENSOR 1 SIGNAL CIRCUIT SHORT TO VOLTAGE.

When Monitored and Set Condition:

SENSOR 1 SIGNAL CIRCUIT SHORT TO VOLTAGE

When Monitored: With rear sensors active.

Set Condition: A short to voltage in the Sensor signal circuit is detected.

SENSOR 2 SIGNAL CIRCUIT SHORT TO VOLTAGE

When Monitored: With rear sensors active.

Set Condition: A short to voltage in the Sensor signal circuit is detected.

SENSOR 3 SIGNAL CIRCUIT SHORT TO VOLTAGE

When Monitored: With rear sensors active.

Set Condition: A short to voltage in the Sensor signal circuit is detected.

SENSOR 4 SIGNAL CIRCUIT SHORT TO VOLTAGE

When Monitored: With rear sensors active.

Set Condition: A short to voltage in the Sensor signal circuit is detected.

POSSIBLE CAUSES
INTERMITTENT CONDITION
SENSOR SIGNAL CIRCUIT SHORT TO VOLTAGE
PARK ASSIST SENSOR
PARK ASSIST MODULE

SENSOR 1 SIGNAL CIRCUIT SHORT TO VOLTAGE — Continued

TEST	ACTION	APPLICABILITY
1	**NOTE: Make sure that the rear bumper is free of dirt and debris to keep the system operating properly.** **NOTE: Jackhammers, large trucks, and other vibrations could affect the performance of the system.** With the DRBIII®, Erase DTCs. Cycle the ignition off for at least 1 minute. Use the Service Information as a guide to activate the Park Assist System. Move an object into range of the Sensor that set this DTC. Turn the ignition on. With the brake applied, move the gear selector to the neutral position. **NOTE: The system is active only when the vehicle is in reverse or neutral for vehicle speeds less than 16 Kmh (10 mph). If the vehicle Parking/Emergency Brake is applied, the system is deactivated.** With the DRBIII® under Inputs/Outputs, read the Sensors input state. The state must indicate ″Active″ for the diagnostic to run. With the DRBIII®, read DTCs. Does this DTC reset? Yes → Go To 2 No → Go To 4	All
2	Turn the ignition off. Disconnect the Park Assist Module harness connector. Use the chart below to identify the sensor: Sensor 1 is the rear outer right sensor. Sensor 2 is the rear inner right sensor. Sensor 3 is the rear inner left sensor. Sensor 4 is the rear outer left sensor. Disconnect the Park Assist Sensor harness connector. Turn the ignition on. Measure the voltage of the Sensor signal circuit. Is there any voltage present? Yes → Repair the Sensor Signal circuit for a short to voltage. Perform BODY VERIFICATION TEST - VER 1. No → Go To 3	All

SENSOR 1 SIGNAL CIRCUIT SHORT TO VOLTAGE — Continued

TEST	ACTION	APPLICABILITY
3	Use the chart below to identify the sensor: Sensor 1 is the rear outer right sensor. Sensor 2 is the rear inner right sensor. Sensor 3 is the rear inner left sensor. Sensor 4 is the rear outer left sensor. Replace the applicable Sensor in accordance with the Service information. With the DRBIII®, Erase DTCs. Cycle the ignition off for at least one minute. Use the Service Information as a guide to activate the Park Assist System. Move an object into range of the Sensor that was replaced. Turn the ignition on. With the brake applied, move the gear selector to the neutral position. **NOTE: The system is active only when the vehicle is in reverse or neutral for vehicle speeds less than 16 Kmh (10 mph). If the vehicle Parking/Emergency Brake is applied, the system is deactivated.** With the DRBIII® under Inputs/Outputs, read the Sensors input state. The state must indicate ″Active″ for the diagnostic to run. With the DRBIII®, read DTCs. Does this DTC reset? Yes → Replace the Park Assist Module in accordance with the Service Information. Perform BODY VERIFICATION TEST - VER 1. No → Test Complete.	All
4	The conditions necessary to set this DTC are not present at this time. Using the wiring diagrams/schematics as a guide, inspect the wiring and connectors. While monitoring the DRBIII® data relative to this circuit, wiggle test the wiring and connectors. Look for the data to change or for the DTC to reset during the wiggle test. Were any problems found? Yes → Repair as necessary. Perform BODY VERIFICATION TEST - VER 1. No → Test Complete.	All

Symptom List:

SENSOR 1 SIGNAL OR BATTERY CIRCUIT OPEN OR SHORT TO GROUND
SENSOR 2 SIGNAL OR BATTERY CIRCUIT OPEN OR SHORT TO GROUND
SENSOR 3 SIGNAL OR BATTERY CIRCUIT OPEN OR SHORT TO GROUND
SENSOR 4 SIGNAL OR BATTERY CIRCUIT OPEN OR SHORT TO GROUND

Test Note: All symptoms listed above are diagnosed using the same tests. The title for the tests will be SENSOR 1 SIGNAL OR BATTERY CIRCUIT OPEN OR SHORT TO GROUND.

When Monitored and Set Condition:

SENSOR 1 SIGNAL OR BATTERY CIRCUIT OPEN OR SHORT TO GROUND

When Monitored: With rear sensors active.

Set Condition: An open or short to ground in the Sensor Signal or Battery circuit is detected.

SENSOR 2 SIGNAL OR BATTERY CIRCUIT OPEN OR SHORT TO GROUND

When Monitored: With rear sensors active.

Set Condition: An open or short to ground in the Sensor Signal or Battery circuit is detected.

SENSOR 3 SIGNAL OR BATTERY CIRCUIT OPEN OR SHORT TO GROUND

When Monitored: With rear sensors active.

Set Condition: An open or short to ground in the Sensor Signal or Battery circuit is detected.

SENSOR 4 SIGNAL OR BATTERY CIRCUIT OPEN OR SHORT TO GROUND

When Monitored: With rear sensors active.

Set Condition: An open or short to ground in the Sensor Signal or Battery circuit is detected.

POSSIBLE CAUSES
INTERMITTENT CONDITION
SENSOR SIGNAL CIRCUIT SHORT TO GROUND
SENSOR SIGNAL CIRCUIT OPEN
SENSOR SUPPLY CIRCUIT OPEN

SENSOR 1 SIGNAL OR BATTERY CIRCUIT OPEN OR SHORT TO GROUND — Continued

POSSIBLE CAUSES
PARK ASSIST SENSOR
PARK ASSIST MODULE

TEST	ACTION	APPLICABILITY
1	**NOTE: Make sure that the rear bumper is free of dirt and debris to keep the system operating properly.** **NOTE: Jackhammers, large trucks, and other vibrations could affect the performance of the system.** With the DRBIII®, Erase DTCs. Cycle the ignition off for at least 1 minute. Use the Service Information as a guide to activate the Park Assist System. Move an object into range of the Sensor that set this DTC. Turn the ignition on. With the brake applied, move the gear selector to the neutral position. **NOTE: The system is active only when the vehicle is in reverse or neutral for vehicle speeds less than 16 Kmh (10 mph). If the vehicle Parking/Emergency Brake is applied, the system is deactivated.** With the DRBIII® under Inputs/Outputs, read the Sensors input state. The state must indicate ″Active″ for the diagnostic to run. With the DRBIII®, read DTCs. Does this DTC reset? Yes → Go To 2 No → Go To 6	All
2	Turn the ignition off. Disconnect the Park Assist Module harness connector. Use the chart below to identify the sensor: Sensor 1 is the rear outer right sensor. Sensor 2 is the rear inner right sensor. Sensor 3 is the rear inner left sensor. Sensor 4 is the rear outer left sensor. Disconnect the Park Assist Sensor harness connector. Turn the ignition on. Measure the resistance between ground and the Sensor signal circuit. Is the resistance below 5.0 ohms? Yes → Repair the Sensor Signal circuit for an short to ground. Perform BODY VERIFICATION TEST - VER 1. No → Go To 3	All
3	Turn the ignition off. Disconnect the Park Assist Module harness connector. Use the chart below to identify the sensor: Sensor 1 is the rear outer right sensor. Sensor 2 is the rear inner right sensor. Sensor 3 is the rear inner left sensor. Sensor 4 is the rear outer left sensor. Disconnect the Park Assist Sensor harness connector. Measure the resistance of the Park Assist Sensor signal circuit. Is the resistance above 5.0 ohms? Yes → Repair the Park Assist Sensor signal circuit for an open. Perform BODY VERIFICATION TEST - VER 1. No → Go To 4	All

SENSOR 1 SIGNAL OR BATTERY CIRCUIT OPEN OR SHORT TO GROUND — Continued

TEST	ACTION	APPLICABILITY
4	Turn the ignition off. Disconnect the Park Assist Module harness connector. Use the chart below to identify the sensor: Sensor 1 is the rear outer right sensor. Sensor 2 is the rear inner right sensor. Sensor 3 is the rear inner left sensor. Sensor 4 is the rear outer left sensor. Disconnect the Park Assist Sensor harness connector. Measure the resistance of the Park Assist Sensor supply circuit. Is the resistance above 5.0 ohms? Yes → Repair the Park Assist Sensor supply circuit for an open. Perform BODY VERIFICATION TEST - VER 1. No → Go To 5	All
5	Use the chart below to identify the sensor: Sensor 1 is the rear outer right sensor. Sensor 2 is the rear inner right sensor. Sensor 3 is the rear inner left sensor. Sensor 4 is the rear outer left sensor. Replace the applicable Sensor in accordance with the Service information. With the DRBIII®, Erase DTCs. Cycle the ignition off for at least one minute. Use the Service Information as a guide to activate the Park Assist System. Move an object into range of the Sensor that was replaced. Turn the ignition on. With the brake applied, move the gear selector to the neutral position. **NOTE: The system is active only when the vehicle is in reverse or neutral for vehicle speeds less than 16 Kmh (10 mph). If the vehicle Parking/Emergency Brake is applied, the system is deactivated.** With the DRBIII® under Inputs/Outputs, read the Sensors input state. The state must indicate ″Active″ for the diagnostic to run. With the DRBIII®, read DTCs. Does this DTC reset? Yes → Replace the Park Assist Module in accordance with the Service Information. Perform BODY VERIFICATION TEST - VER 1. No → Test Complete.	All
6	The conditions necessary to set this DTC are not present at this time. Using the wiring diagrams/schematics as a guide, inspect the wiring and connectors. While monitoring the DRBIII® data relative to this circuit, wiggle test the wiring and connectors. Look for the data to change or for the DTC to reset during the wiggle test. Were any problems found? Yes → Repair as necessary. Perform BODY VERIFICATION TEST - VER 1. No → Test Complete.	All

Symptom:
SENSOR VOLTAGE SUPPLY SHORT TO GROUND

When Monitored and Set Condition:

SENSOR VOLTAGE SUPPLY SHORT TO GROUND

When Monitored: With the ignition on.

Set Condition: A Sensor Voltage Supply circuit short to ground is detected.

POSSIBLE CAUSES
INTERMITTENT CONDITION
SENSOR VOLTAGE SUPPLY SHORT TO GROUND
PARK ASSIST SENSOR
PARK ASSIST MODULE

TEST	ACTION	APPLICABILITY
1	With the DRBIII®, Erase DTCs. Cycle the ignition off for at least 1 minute. Turn the ignition on. With the DRBIII®, read DTCs. Does this DTC reset? Yes → Go To 2 No → Go To 4	All
2	Turn the ignition off. Disconnect the Park Assist Module harness connector. Use the chart below to identify the sensor: Sensor 1 is the rear outer right sensor. Sensor 2 is the rear inner right sensor. Sensor 3 is the rear inner left sensor. Sensor 4 is the rear outer left sensor. Disconnect the Park Assist Sensor harness connector. Measure the resistance between ground and Park Assist Sensor Supply circuit. Is the resistance below 5.0 ohms? Yes → Repair the Park Assist Sensor Supply circuit for an short to ground. Perform BODY VERIFICATION TEST - VER 1. No → Go To 3	All

SENSOR VOLTAGE SUPPLY SHORT TO GROUND — Continued

TEST	ACTION	APPLICABILITY
3	Use the chart below to identify the sensor: Sensor 1 is the rear outer right sensor. Sensor 2 is the rear inner right sensor. Sensor 3 is the rear inner left sensor. Sensor 4 is the rear outer left sensor. Replace the applicable Sensor in accordance with the Service information. With the DRBIII®, Erase DTCs. Cycle the ignition off for at least one minute. Turn the ignition on. With the DRBIII®, read DTCs. Does this DTC reset? Yes → Replace the Park Assist Module in accordance with the Service Information. Perform BODY VERIFICATION TEST - VER 1. No → Test Complete.	All
4	The conditions necessary to set this DTC are not present at this time. Using the wiring diagrams/schematics as a guide, inspect the wiring and connectors. While monitoring the DRBIII® data relative to this circuit, wiggle test the wiring and connectors. Look for the data to change or for the DTC to reset during the wiggle test. Were any problems found? Yes → Repair as necessary. Perform BODY VERIFICATION TEST - VER 1. No → Test Complete.	All

Symptom:

DRIVER DOOR LOCK SWITCH INPUT OPEN OR SHORT TO VOLTAGE - BCM

When Monitored and Set Condition:

DRIVER DOOR LOCK SWITCH INPUT OPEN OR SHORT TO VOLTAGE - BCM

When Monitored: At all times when battery power is supplied to the Body Control Module.

Set Condition: When the BCM senses voltage to the door lock switch above 4.6 volts for over 10 seconds.

POSSIBLE CAUSES
DTC PRESENT
BODY CONTROL MODULE - DRIVER DOOR LOCK SWITCH VOLTAGE LOW
DOOR LOCK SWITCH GROUND OPEN
DOOR LOCK SWITCH MUX CIRCUIT OPEN
DOOR LOCK SWITCH OPEN
DOOR LOCK SWITCH MUX CIRCUIT SHORT TO VOLTAGE
BODY CONTROL MODULE - DOOR LOCK SWITCH MUX SHORT TO VOLTAGE

TEST	ACTION	APPLICABILITY
1	With the DRBIII®, record and erase DTC's. Cycle the ignition switch from ON to OFF to ON. With the DRBIII®, read DTC's. Remove the key and operate the door locks from the Driver Door Lock Switch while monitoring the DRBIII®. Wait 10 seconds. Does the DRBIII® display DR DOOR LOCK SW INPUT OPEN OR SHORT TO VOLTAGE? Yes → Go To 2 No → Using the wiring diagram/schematic as a guide, inspect the wiring and connectors. Perform BODY VERIFICATION TEST - VER 1.	All
2	With the DRBIII® in Sensors, read the DR DOOR LOCK SW voltage. Does the DRBIII® display 4.3 volts or greater? Yes → Go To 3 No → Disconnect the BCM harness connector(s). Check connectors - Clean/repair as necessary. If okay, replace the Body Control Module. Perform BODY VERIFICATION TEST - VER 1.	All

DRIVER DOOR LOCK SWITCH INPUT OPEN OR SHORT TO VOLTAGE - BCM — Continued

TEST	ACTION	APPLICABILITY
3	Disconnect the Driver Door Lock Switch connector. Using a 12-volt test light connected to 12-volts, check the Ground circuit in the harness connector. Does the test light illuminate brightly? Yes → Go To 4 No → Repair the Ground circuit for an open. Perform BODY VERIFICATION TEST - VER 1.	All
4	Disconnect the Driver Door Lock Switch connector. Measure the voltage between Door Lock Switch Mux circuit and Ground in the harness connector. Select the voltage present. Below 4.3 volts.. Repair the Door Lock Switch Mux circuit for an open. Perform BODY VERIFICATION TEST - VER 1. Between 4.4 volts and 5.2 volts. Replace the Door Lock Switch. Perform BODY VERIFICATION TEST - VER 1. Above 5.3 volts. Go To 5	All
5	Disconnect the Driver Door Lock Switch connector. Disconnect the Body Control Module C3 connector. **NOTE: Check connectors - Clean/repair as necessary.** Turn the ignition on. Turn the park lamps on. Measure the voltage between Door Lock Switch Mux circuit and ground. Is there any voltage present? Yes → Repair the Door Lock Switch Mux circuit for a short to voltage. Perform BODY VERIFICATION TEST - VER 1. No → Replace the Body Control Module. Perform BODY VERIFICATION TEST - VER 1.	All

Symptom:

DRIVER DOOR LOCK SWITCH INPUT SHORT - BCM

When Monitored and Set Condition:

DRIVER DOOR LOCK SWITCH INPUT SHORT - BCM

When Monitored: At all times when battery power is supplied to the Body Control Module.

Set Condition: When the BCM senses voltage to the door lock switch below .5 volts for over 10 seconds.

POSSIBLE CAUSES
DTC PRESENT
DOOR LOCK SWITCH SHORTED
DOOR LOCK SWITCH MUX SHORT TO GROUND
BODY CONTROL MODULE - DOOR LOCK SWITCH VOLTAGE SHORTED

TEST	ACTION	APPLICABILITY
1	Turn the ignition on. With the DRBIII®, record and erase DTC's. With the DRBIII®, read DTC's. Remove the key and operate the door locks several times from the Driver Door Lock Switch while monitoring the DRBIII®. Wait 10 seconds. Does the DRBIII® display DR DOOR LOCK SW INPUT SHORT? Yes → Go To 2 No → Using the wiring diagram/schematic as a guide, inspect the wiring and connectors. Perform BODY VERIFICATION TEST - VER 1.	All
2	Disconnect the Door Lock Switch connector. With the DRBIII® in Sensors, read the DR DOOR SW MUX circuit Is the voltage above 4.6 volts? Yes → Replace the Door Lock Switch. Perform BODY VERIFICATION TEST - VER 1. No → Go To 3	All
3	Disconnect the Driver Door Lock Switch connector. Disconnect the Body Control Module C3 connector. **NOTE: Check connectors - Clean/repair as necessary.** Measure the resistance between Door Lock Switch Mux circuit and ground. Is the resistance below 1000.0 ohms? Yes → Repair the Door Lock Switch Mux circuit for a short to ground. Perform BODY VERIFICATION TEST - VER 1. No → Go To 4	All

DRIVER DOOR LOCK SWITCH INPUT SHORT - BCM — Continued

TEST	ACTION	APPLICABILITY
4	If there are no possible causes remaining, view repair. Repair Replace the Body Control Module. Perform BODY VERIFICATION TEST - VER 1.	All

Symptom:

DRIVER DOOR LOCK SWITCH INPUT STUCK - BCM

When Monitored and Set Condition:

DRIVER DOOR LOCK SWITCH INPUT STUCK - BCM

When Monitored: At all times when battery power is supplied to the Body Control Module.

Set Condition: When the BCM senses voltage to the door lock switch between 1.3 and 3.25 for over 10 seconds.

POSSIBLE CAUSES
DTC PRESENT
BODY CONTROL MODULE - DOOR LOCK SWITCH VOLTAGE INCORRECT
DOOR LOCK SWITCH GROUND OPEN
DOOR LOCK SWITCH MUX OPEN
DOOR LOCK SWITCH STUCK

TEST	ACTION	APPLICABILITY
1	Turn the ignition on. With the DRBIII®, record and erase DTC's. With the DRBIII®, read DTC's. Remove the key and operate the door lock several times from the Driver Door Lock Switch while monitoring the DRBIII®. Wait 10 seconds. Does the DRBIII® display DR DOOR LOCK SW INPUT STUCK? Yes → Go To 2 No → Using the wiring diagram/schematic as a guide, inspect the wiring and connectors. Perform BODY VERIFICATION TEST - VER 1.	All
2	With the DRBIII® in Sensors, read the DR DOOR LOCK SW voltage. Does the DRBIII® display voltage between 1.3 and 3.25 volts? Yes → Go To 3 No → Disconnect the BCM harness connector(s). Check connectors - Clean/repair as necessary. If okay, replace the Body Control Module. Perform BODY VERIFICATION TEST - VER 1.	All
3	Disconnect the Driver Door Lock Switch connector. Using a 12-volt test light connected to 12-volts, check the Ground circuit. Does the test light illuminate brightly? Yes → Go To 4 No → Repair the Ground circuit for an open. Perform BODY VERIFICATION TEST - VER 1.	All

DRIVER DOOR LOCK SWITCH INPUT STUCK - BCM — Continued

TEST	ACTION	APPLICABILITY
4	Disconnect the Driver Door Lock Switch connector. Measure the voltage between Door Lock Switch Mux circuit and ground. Is the voltage above 4.6 volts? Yes → Go To 5 No → Repair the Door Lock Switch Mux circuit for an open. Perform BODY VERIFICATION TEST - VER 1.	All
5	If there are no possible causes remaining, view repair. Repair Replace the Door Lock Switch. Perform BODY VERIFICATION TEST - VER 1.	All

Symptom:

LEFT CYLINDER LOCK SWITCH INPUT SHORT - BCM

When Monitored and Set Condition:

LEFT CYLINDER LOCK SWITCH INPUT SHORT - BCM

When Monitored: At all times when battery power is supplied to the Body Control Module.

Set Condition: When the BCM senses voltage to the cylinder lock switch below .5 volts for over 10 seconds.

POSSIBLE CAUSES
DTC PRESENT
CYLINDER LOCK SWITCH SHORTED
CYLINDER LOCK SWITCH MUX CIRCUIT SHORT TO GROUND
BODY CONTROL MODULE - LEFT CYLINDER LOCK SWITCH VOLTAGE SHORTED

TEST	ACTION	APPLICABILITY
1	NOTE: When this code is present, the VTSS indicator will stay on solid during the arming process. With the DRBIII®, record and erase DTC's. Cycle the ignition switch from ON to OFF to ON. With the DRBIII®, read DTC's. Remove the key and operate the door locks several times from the Left Cylinder Lock Switch while monitoring the DRBIII®. Wait 10 seconds. Does the DRBIII® display LEFT CYL LOCK SW INPUT SHORT? Yes → Go To 2 No → Using the wiring diagram/schematic as a guide, inspect the wiring and connectors. Perform BODY VERIFICATION TEST - VER 1.	All
2	Disconnect the Left Cylinder Lock Switch connector. With the DRBIII® in Sensors, read the LEFT CYL SW MUX circuit Is the voltage above 4.6 volts? Yes → Replace the Cylinder Lock Switch. Perform BODY VERIFICATION TEST - VER 1. No → Go To 3	All

LEFT CYLINDER LOCK SWITCH INPUT SHORT - BCM — Continued

TEST	ACTION	APPLICABILITY
3	Disconnect the Right Cylinder Lock Switch connector. Disconnect the Body Control Module C3 connector. Measure the resistance between Cylinder Lock Switch Mux circuit and ground. Is the resistance below 1000.0 ohms? Yes → Repair the Cylinder Lock Switch Mux circuit for a short to ground. Perform BODY VERIFICATION TEST - VER 1. No → Go To 4	All
4	If there are no possible causes remaining, view repair. Repair Disconnect the BCM harness connector(s). Check connectors - Clean/repair as necessary. If okay, replace the Body Control Module. Perform BODY VERIFICATION TEST - VER 1.	All

Symptom:

LEFT CYLINDER LOCK SWITCH INPUT STUCK - BCM

When Monitored and Set Condition:

LEFT CYLINDER LOCK SWITCH INPUT STUCK - BCM

When Monitored: At all times when battery power is supplied to the Body Control Module.

Set Condition: When the BCM senses voltage to the cylinder lock switch between 1.3 and 3.25 for over 10 seconds.

POSSIBLE CAUSES
DTC PRESENT
BODY CONTROL MODULE - LEFT CYLINDER LOCK SWITCH VOLTAGE INCORRECT
LEFT CYLINDER LOCK SWITCH GROUND OPEN
LEFT CYLINDER LOCK SWITCH MUX OPEN
CYLINDER LOCK SWITCH STUCK

TEST	ACTION	APPLICABILITY
1	NOTE: When this code is present, the VTSS indicator will stay on solid during the arming process. With the DRBIII®, record and erase DTC's. Cycle the ignition switch from ON to OFF to ON. With the DRBIII®, read DTC's. Remove the key and operate the door lock several times from the Left Cylinder Lock Switch while monitoring the DRBIII®. Wait 10 seconds. Does the DRBIII® display LEFT CYL LOCK SW INPUT STUCK? Yes → Go To 2 No → Using the wiring diagram/schematic as a guide, inspect the wiring and connectors. Perform BODY VERIFICATION TEST - VER 1.	All
2	With the DRBIII® in Sensors, read the LEFT CYL LOCK SW voltage. Does the DRBIII® display voltage between 1.3 and 3.25 volts? Yes → Go To 3 No → Replace the Body Control Module. Perform BODY VERIFICATION TEST - VER 1.	All
3	Disconnect the Left Cylinder Lock Switch connector. Using a 12-volt test light connected to 12-volts, check the Ground circuit. Does the test light illuminate brightly? Yes → Go To 4 No → Repair the Ground circuit for an open. Perform BODY VERIFICATION TEST - VER 1.	All

LEFT CYLINDER LOCK SWITCH INPUT STUCK - BCM — Continued

TEST	ACTION	APPLICABILITY
4	Disconnect the Left Cylinder Lock Switch connector. Measure the voltage between Cylinder Lock Switch Mux circuit and ground. Is the voltage above 4.6 volts? Yes → Go To 5 No → Repair the Left Cylinder Lock Switch Mux circuit for an open. Perform BODY VERIFICATION TEST - VER 1.	All
5	If there are no possible causes remaining, view repair. Repair Replace the Cylinder Lock Switch. Perform BODY VERIFICATION TEST - VER 1.	All

Symptom:

LEFT UNLOCK OUTPUT FAILURE - BCM

When Monitored and Set Condition:

LEFT UNLOCK OUTPUT FAILURE - BCM

When Monitored: At all times when battery power is supplied to the Body Control Module.

Set Condition: When the BCM senses a short condition on the left side door unlock circuits for over 125 milliseconds.

POSSIBLE CAUSES
DTC PRESENT
BODY CONTROL MODULE - LEFT DOOR UNLOCK DRIVER SHORT TO GROUND
LEFT FRONT DOOR UNLOCK DRIVER SHORT TO GROUND
LEFT SLIDING DOOR UNLOCK DRIVER SHORT TO GROUND
LEFT FRONT DOOR LOCK MOTOR - SHORT TO GROUND
LEFT SLIDING DOOR LOCK MOTOR - SHORT TO GROUND

TEST	ACTION	APPLICABILITY
1	NOTE: When this code is present all unlock outputs may be turned off. With the DRBIII®, record and erase DTC's. With the DRBIII®, read DTC's. Operate the door locks several times from the Driver Door Lock Switch while monitoring the DRBIII®. Does the DRBIII® display LEFT UNLOCK OUTPUT FAILURE? Yes → Go To 2 No → Using the wiring diagram/schematic as a guide, inspect the wiring and connectors. Perform BODY VERIFICATION TEST - VER 1.	All
2	Disconnect the Body Control Module C2 connector. Measure the resistance between ground and the Left Front Door Unlock Driver circuit and then the Left Sliding Door Unlock Driver circuit. Select the appropriate reading. Left Front Door Unlock under 1000.0 ohms Go To 3 Left Sliding Door Unlk under 1000.0 ohms Go To 4 Neither circuit under 1000.0 ohms. Replace the Body Control Module. Perform BODY VERIFICATION TEST - VER 1.	All

LEFT UNLOCK OUTPUT FAILURE - BCM — Continued

TEST	ACTION	APPLICABILITY
3	Disconnect the Body Control Module C2 connector. Disconnect the Left Front Door Lock Motor/Ajar Switch connector. Measure the resistance between ground and the Left Front Door Unlock Driver circuit. Is the resistance below 1000.0 ohms? Yes → Repair the Left Front Door Unlock Driver circuit for a short to ground. Perform BODY VERIFICATION TEST - VER 1. No → Replace the Door Lock Motor. Perform BODY VERIFICATION TEST - VER 1.	All
4	Disconnect the Body Control Module C2 connector. Disconnect the Left Sliding Door Lock Motor connector. Measure the resistance between ground and the Left Sliding Door Unlock Driver circuit. Is the resistance below 1000.0 ohms? Yes → Repair the Left Sliding Door Unlock Driver circuit for a short to ground. Perform BODY VERIFICATION TEST - VER 1. No → Replace the Sliding Door Lock Motor (latch assembly). Perform BODY VERIFICATION TEST - VER 1.	All

Symptom:

LIFTGATE POWER RELEASE OUTPUT SHORT - BCM

When Monitored and Set Condition:

LIFTGATE POWER RELEASE OUTPUT SHORT - BCM

When Monitored: Continuously for non power liftgate vehicles

Set Condition: When the Body Control Module senses a low output on the Liftgate Release Driver circuit for longer than 125 ms during a liftgate release actuation.

POSSIBLE CAUSES
DTC PRESENT
BODY CONTROL MODULE - LIFTGATE RELEASE DRIVER SHORTED
LIFTGATE RELEASE DRIVER WIRE SHORT TO GROUND
LIFTGATE RELEASE MOTOR SHORTED

TEST	ACTION	APPLICABILITY
1	Ensure vehicle is unlocked before proceeding. Turn the ignition on. With the DRBIII®, record and erase DTC's. With the DRBIII®, read DTC's. Operate the Liftgate Release several times from the Liftgate Handle Switch while monitoring the DRBIII®. Does the DRBIII® display LIFTGATE POWER RELEASE OUTPUT SHORT? Yes → Go To 2 No → Using the wiring diagram/schematic as a guide, inspect the wiring and connectors for an intermittent condition. Perform BODY VERIFICATION TEST - VER 1.	All
2	Disconnect the Body Control Module C3 connector. Measure the resistance between ground and the Liftgate Release Driver circuit. Is the resistance below 3.5 ohms? Yes → Go To 3 No → Disconnect the BCM harness connector(s). Check connectors - Clean/repair as necessary. If okay, replace the Body Control Module. Perform BODY VERIFICATION TEST - VER 1.	All
3	Disconnect the Liftgate Ajar Switch connector. Disconnect the Body Control Module C3 connector. **NOTE: Check connectors - Clean/repair as necessary.** Measure the resistance between Liftgate Release Driver circuit and ground. Is the resistance below 100.0 ohms? Yes → Repair the Liftgate Release Driver circuit for a short to ground. Perform BODY VERIFICATION TEST - VER 1. No → Go To 4	All

LIFTGATE POWER RELEASE OUTPUT SHORT - BCM — Continued

TEST	ACTION	APPLICABILITY
4	If there are no possible causes remaining, view repair. Repair Replace the Liftgate Release Motor. Perform BODY VERIFICATION TEST - VER 1.	All

Symptom:

LOCK OUTPUT FAILURE - BCM

When Monitored and Set Condition:

LOCK OUTPUT FAILURE - BCM

When Monitored: At all times when battery power is supplied to the Body Control Module.

Set Condition: When the BCM senses a short condition on the door lock circuits for over 125 milliseconds.

POSSIBLE CAUSES
DTC PRESENT
DOOR LOCK DRIVER SHORT TO GROUND
LEFT FRONT DOOR LOCK DRIVER SHORT GROUND
LEFT SLIDING DOOR LOCK DRIVER WIRE SHORT TO GROUND
RIGHT FRONT DOOR LOCK DRIVER WIRE SHORT TO GROUND
RIGHT SLIDING DOOR LOCK DRIVER WIRE SHORT TO GROUND
LEFT FRONT DOOR LOCK MOTOR - SHORT TO GROUND
LEFT SLIDING DOOR LOCK MOTOR - SHORT TO GROUND
RIGHT FRONT DOOR LOCK MOTOR - SHORT TO GROUND
RIGHT SLIDING DOOR LOCK MOTOR - SHORT TO GROUND

TEST	ACTION	APPLICABILITY
1	With the DRBIII®, record and erase DTC's. Cycle the ignition switch from ON to OFF. With the DRBIII®, read DTC's. Remove the key and operate the door locks several times from the Driver Door Lock Switch while monitoring the DRBIII® Does the DRBIII® display LOCK OUTPUT FAILURE? Yes → Go To 2 No → Using the wiring diagram/schematic as a guide, inspect the wiring and connectors for an intermittent problem. Perform BODY VERIFICATION TEST - VER 1.	All

LOCK OUTPUT FAILURE - BCM — Continued

TEST	ACTION	APPLICABILITY
2	Disconnect the Body Control Module C2 connector. **NOTE: Check connectors - Clean/repair as necessary.** Measure the resistance between ground and each of the Door Lock Driver circuits. Select the appropriate reading. Right Front Door Lock under 1000.0 ohm Go To 3 Right Sliding Door Lock under 1000.0 ohm Go To 4 Left Front Door Lock under 1000.0 ohm Go To 5 Left Sliding Door Lock under 1000.0 ohm Go To 6 None of the circuits under 1000.0 ohms. Replace the Body Control Module. Perform BODY VERIFICATION TEST - VER 1.	All
3	Disconnect the Body Control Module C2 connector. Disconnect the Right Front Door Lock Motor/Ajar Switch connector. Measure the resistance between ground and the Right Front Door Lock Driver circuit. Is the resistance below 1000.0 ohms? Yes → Repair the Right Front Door Lock Driver wire for a short to ground. Perform BODY VERIFICATION TEST - VER 1. No → Replace the Door Lock Motor. Perform BODY VERIFICATION TEST - VER 1.	All
4	Disconnect the Body Control Module C2 connector. Disconnect the Right Sliding Door Lock Motor connector. Measure the resistance between ground and the Right Sliding Door Lock Driver circuit. Is the resistance below 1000.0 ohms? Yes → Repair the Right Sliding Door Lock Driver wire for a short to ground. Perform BODY VERIFICATION TEST - VER 1. No → Replace the Right Sliding Door Lock Motor (Latch assy.) Perform BODY VERIFICATION TEST - VER 1.	All
5	Disconnect the Body Control Module C2 connector. Disconnect the Left Front Door Lock Motor connector. Measure the resistance between ground and the Left Front Door Lock Driver circuit. Is the resistance below 1000.0 ohms? Yes → Repair the Left Front Door Lock Driver circuit for a short to ground. Perform BODY VERIFICATION TEST - VER 1. No → Replace the Door Lock Motor. Perform BODY VERIFICATION TEST - VER 1.	All

LOCK OUTPUT FAILURE - BCM — Continued

TEST	ACTION	APPLICABILITY
6	Disconnect the Body Control Module C2 connector. Disconnect the Left Sliding Door Lock Motor connector. Measure the resistance between ground and the Left Sliding Door Lock Driver circuit. Is the resistance below 1000.0 ohms? Yes → Repair the Left Sliding Door Lock Driver wire for a short to ground. Perform BODY VERIFICATION TEST - VER 1. No → Replace the Left Sliding Door Lock Motor (Latch assy.) Perform BODY VERIFICATION TEST - VER 1.	All

Symptom:

PASSENGER DOOR LOCK SWITCH INPUT OPEN OR SHORT TO VOLTAGE - BCM

When Monitored and Set Condition:

PASSENGER DOOR LOCK SWITCH INPUT OPEN OR SHORT TO VOLTAGE - BCM

When Monitored: At all times when battery power is supplied to the Body Control Module.

Set Condition: When the BCM senses voltage to the door lock switch above 4.6 volts for over 10 seconds.

POSSIBLE CAUSES
DTC PRESENT
BODY CONTROL MODULE - PASSENGER DOOR LOCK SWITCH VOLTAGE LOW
DOOR LOCK SWITCH GROUND OPEN
DOOR LOCK SWITCH MUX OPEN
DOOR LOCK SWITCH OPEN
DOOR LOCK SWITCH MUX SHORT TO VOLTAGE
BODY CONTROL MODULE - DOOR LOCK SWITCH MUX SHORT TO VOLTAGE

TEST	ACTION	APPLICABILITY
1	With the DRBIII®, record and erase DTC's. Cycle the ignition from ON to OFF to ON. With the DRBIII®, read DTC's. Remove the key and operate the door locks several times from the Passenger Door Lock Switch while monitoring the DRBIII®. Does the DRBIII® display PASS DOOR LOCK SW INPUT OPEN OR SHORT TO VOLTAGE? Yes → Go To 2 No → Using the wiring diagram/schematic as a guide, inspect the wiring and connectors. Perform BODY VERIFICATION TEST - VER 1.	All
2	With the DRBIII® in Sensors, read the PASS DOOR LOCK SW voltage. Does the DRBIII® display 4.0 volts or greater? Yes → Go To 3 No → Disconnect the BCM harness connector(s). Check connectors - Clean/repair as necessary. If okay, replace the Body Control Module. Perform BODY VERIFICATION TEST - VER 1.	All

PASSENGER DOOR LOCK SWITCH INPUT OPEN OR SHORT TO VOLTAGE - BCM — Continued

TEST	ACTION	APPLICABILITY
3	Disconnect the Passenger Door Lock Switch connector. Using a 12-volt test light connected to 12-volts, check the Ground circuit. Does the test light illuminate brightly? Yes → Go To 4 No → Repair the Ground circuit for an open. Perform BODY VERIFICATION TEST - VER 1.	All
4	Disconnect the Passenger Door Lock Switch connector. Measure the voltage between Door Lock Switch Mux circuit and ground. Select the voltage present. Below 4.0 volts. Repair the Door Lock Switch Mux circuit for an open. Perform BODY VERIFICATION TEST - VER 1. Between 4.1 volts and 5.2 volts. Replace the Door Lock Switch. Perform BODY VERIFICATION TEST - VER 1. Above 5.3 volts Go To 5	All
5	Disconnect the Passenger Door Lock Switch connector. Disconnect the Body Control Module C3 connector. **NOTE: Check connectors - Clean/repair as necessary.** Turn the ignition on. Measure the voltage between Door Lock Switch Mux circuit and ground. Is there any voltage present? Yes → Repair the Door Lock Switch Mux circuit for a short to voltage. Perform BODY VERIFICATION TEST - VER 1. No → Replace the Body Control Module. Perform BODY VERIFICATION TEST - VER 1.	All

Symptom:

PASSENGER DOOR LOCK SWITCH INPUT SHORT - BCM

When Monitored and Set Condition:

PASSENGER DOOR LOCK SWITCH INPUT SHORT - BCM

When Monitored: At all times when battery power is supplied to the Body Control Module.

Set Condition: When the BCM senses voltage to the door lock switch below .5 volts for over 10 seconds.

POSSIBLE CAUSES
DTC PRESENT
PASSENGER DOOR LOCK SWITCH SHORTED
DOOR LOCK SWITCH MUX SHORT TO GROUND
BODY CONTROL MODULE - PASSENGER DOOR LOCK SWITCH VOLTAGE SHORTED

TEST	ACTION	APPLICABILITY
1	With the DRBIII®, record and erase DTC's. Cycle ignition ON to OFF to ON. With the DRBIII®, read DTCs. Remove the key and operate the door locks several times from the Driver Door Lock Switch while monitoring the DRBIII. Does the DRBIII® display DR DOOR LOCK SW INPUT SHORT? Yes → Go To 2 No → Using the wiring diagram/schematic as a guide, inspect the wiring and connectors. Perform BODY VERIFICATION TEST - VER 1.	All
2	Disconnect the Passenger Door Lock Switch connector. With the DRBIII® in Sensors, read the PASS DOOR SW MUX circuit Is the voltage above 4.6 volts? Yes → Replace the Door Lock Switch. Perform BODY VERIFICATION TEST - VER 1. No → Go To 3	All
3	Disconnect the Passenger Door Lock Switch connector. Disconnect the Body Control Module C3 connector. Measure the resistance between Door Lock Switch Mux circuit and ground. Is the resistance below 1000.0 ohms? Yes → Repair the Door Lock Switch Mux circuit for a short to ground. Perform BODY VERIFICATION TEST - VER 1. No → Go To 4	All

PASSENGER DOOR LOCK SWITCH INPUT SHORT - BCM — Continued

TEST	ACTION	APPLICABILITY
4	If there are no possible causes remaining, view repair. Repair Disconnect the BCM harness connector(s). Check connectors - Clean/repair as necessary. If okay, replace the Body Control Module. Perform BODY VERIFICATION TEST - VER 1.	All

Symptom:

PASSENGER DOOR LOCK SWITCH INPUT STUCK - BCM

When Monitored and Set Condition:

PASSENGER DOOR LOCK SWITCH INPUT STUCK - BCM

When Monitored: At all times when battery power is supplied to the Body Control Module.

Set Condition: When the BCM senses voltage to the door lock switch between 1.3 and 3.25 for over 10 seconds.

POSSIBLE CAUSES
DTC PRESENT
BODY CONTROL MODULE - PASSENGER DOOR LOCK SWITCH VOLTAGE INCORRECT
DOOR LOCK SWITCH GROUND OPEN
DOOR LOCK SWITCH MUX OPEN
DOOR LOCK SWITCH STUCK

TEST	ACTION	APPLICABILITY
1	With the DRBIII®, record and erase DTC's. Cycle the ignition ON to OFF to ON. With the DRBIII®, read DTCs. Remove the key and operate the door lock several times from the Passenger Door Lock Switch while monitoring the DRBIII. Does the DRBIII® display PASS DOOR LOCK SW INPUT STUCK? Yes → Go To 2 No → Using the wiring diagram/schematic as a guide, inspect the wiring and connectors. Perform BODY VERIFICATION TEST - VER 1.	All
2	With the DRBIII® in Sensors, read the PASS DOOR LOCK SW voltage. Does the DRBIII® display voltage between 1.3 and 3.25 volts? Yes → Go To 3 No → Disconnect the BCM harness connector(s). Check connectors - Clean/repair as necessary. If okay, replace the Body Control Module. Perform BODY VERIFICATION TEST - VER 1.	All
3	Disconnect the Passenger Door Lock Switch connector. Using a 12-volt test light connected to 12-volts, check the Ground circuit. Does the test light illuminate brightly? Yes → Go To 4 No → Repair the Ground circuit for an open. Perform BODY VERIFICATION TEST - VER 1.	All

PASSENGER DOOR LOCK SWITCH INPUT STUCK - BCM — Continued

TEST	ACTION	APPLICABILITY
4	Disconnect the Passenger Door Lock Switch connector. Measure the voltage between Door Lock Switch Mux circuit and ground. Is the voltage above 4.6 volts? Yes → Go To 5 No → Repair the Door Lock Switch Mux circuit for an open. Perform BODY VERIFICATION TEST - VER 1.	All
5	If there are no possible causes remaining, view repair. Repair Replace the Door Lock Switch. Perform BODY VERIFICATION TEST - VER 1.	All

Symptom:

RIGHT CYLINDER LOCK SWITCH INPUT SHORT - BCM (EXPORT ONLY - IF EQUIPPED)

When Monitored and Set Condition:

RIGHT CYLINDER LOCK SWITCH INPUT SHORT - BCM (EXPORT ONLY - IF EQUIPPED)

When Monitored: At all times when battery power is supplied to the Body Control Module.

Set Condition: When the BCM senses voltage to the cylinder lock switch below .5 volts for over 10 seconds.

POSSIBLE CAUSES
DTC PRESENT
CYLINDER LOCK SWITCH SHORTED
CYLINDER LOCK SWITCH MUX CIRCUIT SHORT TO GROUND
BODY CONTROL MODULE - RIGHT CYLINDER LOCK SWITCH VOLTAGE SHORTED

TEST	ACTION	APPLICABILITY
1	NOTE: When this code is present, the VTSS indicator will stay on solid during the arming process. With the DRBIII®, record and erase DTC's. With the DRBIII®, read DTC's. Remove the key and operate the door locks several times from the Right Cylinder Lock Switch while monitoring the DRBIII®. Wait 10 seconds. Does the DRBIII® display RIGHT CYL LOCK SW INPUT SHORT? Yes → Go To 2 No → Using the wiring diagram/schematic as a guide, inspect the wiring and connectors. Perform BODY VERIFICATION TEST - VER 1.	All
2	Disconnect the Right Cylinder Lock Switch connector. With the DRBIII® in Sensors, read the RIGHT CYL SW MUX circuit Is the voltage above 4.6 volts? Yes → Replace the Cylinder Lock Switch. Perform BODY VERIFICATION TEST - VER 1. No → Go To 3	All

RIGHT CYLINDER LOCK SWITCH INPUT SHORT - BCM (EXPORT ONLY - IF EQUIPPED) — Continued

TEST	ACTION	APPLICABILITY
3	Disconnect the Right Cylinder Lock Switch connector. Disconnect the Body Control Module C3 connector. Measure the resistance between Cylinder Lock Switch Mux circuit and ground. Is the resistance below 1000.0 ohms? Yes → Repair the Cylinder Lock Switch Mux circuit for a short to ground. Perform BODY VERIFICATION TEST - VER 1. No → Go To 4	All
4	If there are no possible causes remaining, view repair. Repair Replace the Body Control Module. Perform BODY VERIFICATION TEST - VER 1.	All

Symptom:

RIGHT CYLINDER LOCK SWITCH INPUT STUCK - BCM (EXPORT ONLY - IF EQUIPPED)

When Monitored and Set Condition:

RIGHT CYLINDER LOCK SWITCH INPUT STUCK - BCM (EXPORT ONLY - IF EQUIPPED)

When Monitored: At all times when battery power is supplied to the Body Control Module.

Set Condition: When the BCM senses voltage to the cylinder lock switch between 1.3 and 3.25 for over 10 seconds.

POSSIBLE CAUSES
DTC PRESENT
BODY CONTROL MODULE - RIGHT CYLINDER LOCK SWITCH VOLTAGE INCORRECT
RIGHT CYLINDER LOCK SWITCH GROUND OPEN
RIGHT CYLINDER LOCK SWITCH MUX OPEN
CYLINDER LOCK SWITCH STUCK

TEST	ACTION	APPLICABILITY
1	NOTE: When this code is present, the VTSS indicator will stay on solid during the arming process. With the DRBIII®, record and erase DTC's. With the DRBIII®, read DTCs. Remove the key and operate the door lock several times from the Right Cylinder Lock Switch while monitoring the DRBIII®. Wait 10 seconds. Does the DRBIII® display RIGHT CYL LOCK SW INPUT STUCK? Yes → Go To 2 No → Using the wiring diagram/schematic as a guide, inspect the wiring and connectors. Perform BODY VERIFICATION TEST - VER 1.	All
2	With the DRBIII® in Sensors, read the RIGHT CYL LOCK SW voltage. Does the DRBIII® display voltage between 1.3 and 3.25 volts? Yes → Go To 3 No → Disconnect the BCM harness connector(s). Check connectors - Clean/repair as necessary. If okay, replace the Body Control Module. Perform BODY VERIFICATION TEST - VER 1.	All

RIGHT CYLINDER LOCK SWITCH INPUT STUCK - BCM (EXPORT ONLY - IF EQUIPPED) — Continued

TEST	ACTION	APPLICABILITY
3	Disconnect the Right Cylinder Lock Switch connector. Using a 12-volt test light connected to 12-volts, check the Ground circuit. Does the test light illuminate brightly? Yes → Go To 4 No → Repair the Ground circuit for an open. Perform BODY VERIFICATION TEST - VER 1.	All
4	Disconnect the Right Cylinder Lock Switch connector. Measure the voltage between Cylinder Lock Switch Mux circuit and ground. Is the voltage above 4.6 volts? Yes → Go To 5 No → Repair the Right Cylinder Lock Switch Mux circuit for an open. Perform BODY VERIFICATION TEST - VER 1.	All
5	If there are no possible causes remaining, view repair. Repair Replace the Cylinder Lock Switch. Perform BODY VERIFICATION TEST - VER 1.	All

Symptom:

RIGHT UNLOCK OUTPUT FAILURE - BCM

When Monitored and Set Condition:

RIGHT UNLOCK OUTPUT FAILURE - BCM

When Monitored: At all times when battery power is supplied to the Body Control Module.

Set Condition: When the BCM senses a short condition on the right side door unlock circuits for over 125 milliseconds.

POSSIBLE CAUSES
DTC PRESENT
BODY CONTROL MODULE - RIGHT DOOR UNLOCK DRIVER SHORT TO GROUND
RIGHT FRONT DOOR UNLOCK DRIVER SHORT TO GROUND
RIGHT SLIDING DOOR UNLOCK DRIVER SHORT TO GROUND
RIGHT FRONT DOOR LOCK MOTOR - SHORT TO GROUND
RIGHT SLIDING DOOR LOCK MOTOR - SHORT TO GROUND

TEST	ACTION	APPLICABILITY
1	With the DRBIII®, record and erase DTC's. Cycle the ignition ON to OFF. With the DRBIII®, read DTCs. Operate the door locks several times from the Right Door Lock Switch while monitoring the DRBIII®. Does the DRBIII® display RIGHT UNLOCK OUTPUT FAILURE? Yes → Go To 2 No → Using the wiring diagram/schematic as a guide, inspect the wiring and connectors. Perform BODY VERIFICATION TEST - VER 1.	All
2	Disconnect the Body Control Module C2 connector. **NOTE: Check connectors - Clean/repair as necessary.** Measure the resistance between ground and the Right Front Door Unlock Driver circuit and then the Right Sliding Door Unlock Driver circuit. Select the appropriate reading. Right Front Door Unlock under 1000.0 ohm Go To 3 Right Sliding Door Unlk under 1000.0 ohm Go To 4 Neither circuit under 1000.0 ohms. Replace the Body Control Module. Perform BODY VERIFICATION TEST - VER 1.	All

RIGHT UNLOCK OUTPUT FAILURE - BCM — Continued

TEST	ACTION	APPLICABILITY
3	Disconnect the Body Control Module C2 connector. Disconnect the Right Front Door Lock Motor/Ajar Switch connector. Measure the resistance between ground and the Right Front Door Unlock Driver circuit. Is the resistance below 1000.0 ohms? Yes → Repair the Right Front Door Unlock Driver circuit for a short to ground. Perform BODY VERIFICATION TEST - VER 1. No → Replace the Door Lock Motor. Perform BODY VERIFICATION TEST - VER 1.	All
4	Disconnect the Body Control Module C2 connector. Disconnect the Right Sliding Door Lock Motor connector. Measure the resistance between ground and the Right Sliding Door Unlock Driver circuit. Is the resistance below 1000.0 ohms? Yes → Repair the Right Sliding Door Unlock Driver circuit for a short to ground. Perform BODY VERIFICATION TEST - VER 1. No → Replace the Sliding Door Lock Motor (latch assembly). Perform BODY VERIFICATION TEST - VER 1.	All

Symptom:
*LEFT CYLINDER LOCK SWITCH INOPERATIVE

POSSIBLE CAUSES
DTC PRESENT
BODY CONTROL MODULE - LEFT CYLINDER LOCK SWITCH VOLTAGE LOW
CYLINDER LOCK SWITCH GROUND OPEN
CYLINDER LOCK SWITCH MUX OPEN
CYLINDER LOCK SWITCH OPEN
CYLINDER LOCK SWITCH MUX SHORT TO VOLTAGE
BODY CONTROL MODULE - LEFT CYLINDER LOCK SWITCH MUX SHORT TO VOLTAGE

TEST	ACTION	APPLICABILITY
1	With the DRBIII®, record and erase DTC's. Cycle the ignition switch from ON to OFF to ON. Remove the key and operate the door locks several times from the Left Cylinder Lock Switch while monitoring the DRBIII®. Wait 10 seconds. With the DRBIII®, read DTCs. Are there any Power Door Lock related DTC's present? No → Go To 2 Yes → Refer to symptom list for problems related to POWER DOOR LOCKS. Perform BODY VERIFICATION TEST - VER 1.	All
2	With the DRBIII® in Sensors, read the LEFT CYL LOCK SW voltage. Does the DRBIII® display 4.0 volts or greater? Yes → Go To 3 No → Disconnect the BCM harness connector(s). Check connectors - Clean/repair as necessary. If okay, replace the Body Control Module. Perform BODY VERIFICATION TEST - VER 1.	All
3	Disconnect the Left Cylinder Lock Switch connector. Using a 12-volt test light connected to 12-volts, check the Ground circuit in the harness connector. Does the test light illuminate brightly? Yes → Go To 4 No → Repair the Ground circuit for an open. Perform BODY VERIFICATION TEST - VER 1.	All

*LEFT CYLINDER LOCK SWITCH INOPERATIVE — Continued

TEST	ACTION	APPLICABILITY
4	Disconnect the Left Cylinder Lock Switch connector. Measure the voltage between Cylinder Lock Switch Mux circuit and Ground in the harness connector. Select the voltage present. Below 4.2 volts. Repair the Cylinder Lock Switch Mux circuit for an open. Perform BODY VERIFICATION TEST - VER 1. Between 4.3 volts and 5.2 volts. Replace the Cylinder Lock Switch. Perform BODY VERIFICATION TEST - VER 1. Above 5.3 volts. Go To 5	All
5	Disconnect the Left Cylinder Door Lock Switch connector. Disconnect the Body Control Module C3 connector. **NOTE: Check connectors - Clean/repair as necessary.** Turn the ignition on. Measure the voltage between Left Cylinder Lock Switch Mux circuit and ground. Is there any voltage present? Yes → Repair the Cylinder Lock Switch Mux circuit for a short to voltage. Perform BODY VERIFICATION TEST - VER 1. No → Replace the Body Control Module. Perform BODY VERIFICATION TEST - VER 1.	All

Symptom:

*REMOTE KEYLESS ENTRY INOPERATIVE

POSSIBLE CAUSES
DTC PRESENT
SKREEM DTC PRESENT
TEST TRANSMITTER WITH TESTER
RKE TRANSMITTER INOPERATIVE
RKE TRANSMITTER NOT PROGRAMMED
SKREEM MODULE - RKE INOPERATIVE
SKREEM MODULE - RKE INOPERATIVE

TEST	ACTION	APPLICABILITY
1	**NOTE: Ensure there is communication between the SKREEM, BODY CONTROL MODULE and the POWERTRAIN CONTROL MODULE before proceeding.** With the DRBIII® select ″BODY″, ″BODY CONTROLLER″ and read DTC's. Does the DRBIII® display any RKE related trouble codes? Yes → Refer to symptom list for problems related to POWER DOOR LOCKS/RKE. No → Go To 2	All
2	With the DRBIII® select ″VEHICLE THEFT″, ″SKIM″ and read DTC's. Does the DRBIII® display any SKREEM trouble codes? Yes → Refer to symptom list for problems related to SKREEM. No → Go To 3	All
3	Do you have access to the Miller Special Tool ″9001 RF DETECTOR″? No → Go To 4 Yes → Go To 5	All
4	With the DRBIII® select THEFT ALARM, SKIM, MONITORS and observe the ″FOB #″ and ″FOB Button″.. Press the LOCK button and then the UNLOCK button on the Transmitter. Does the DRBIII® display:″ UNLOCK″, ″LOCK″ and the ″FOB Number″? Yes → Replace the Sentry Key RemotE Entry Module. Perform SKREEM VERIFICATION TEST - VER 1A. No → Replace the Transmitter key and using the DRBIII®, PROGRAM NEW KEY. Perform SKREEM VERIFICATION TEST - VER 1A.	All

*REMOTE KEYLESS ENTRY INOPERATIVE — Continued

TEST	ACTION	APPLICABILITY
5	Using the 9001 RF Detector, follow the instructions on the back of the tester and test the transmitter several times. Does the signal strength measure ″STRONG″? Yes → Go To 6 No → Check and replace the battery if it is under 3.2 volts and retest the transmitter. If the battery is okay, replace the transmitter. Perform SKREEM VERIFICATION TEST - VER 1A.	All
6	With the DRBIII®, select THEFT ALARM, SKIM then PROGRAM NEW KEY and follow the instructions on the screen. Exit PROGRAM NEW KEY. Activate the Door Locks using the RKE Transmitter. Did the door locks respond properly to the RKE transmitter commands? Yes → Repair complete. No → Replace the Sentry Key RemotE Entry Module. Perform SKREEM VERIFICATION TEST - VER 1A.	All

Symptom:

*RIGHT CYLINDER LOCK SWITCH INOPERATIVE

POSSIBLE CAUSES
DTC PRESENT
BODY CONTROL MODULE - RIGHT CYLINDER LOCK SWITCH VOLTAGE LOW
CYLINDER LOCK SWITCH GROUND OPEN
CYLINDER LOCK SWITCH MUX OPEN
CYLINDER LOCK SWITCH OPEN
CYLINDER LOCK SWITCH MUX SHORT TO VOLTAGE
BODY CONTROL MODULE - RIGHT CYLINDER LOCK SWITCH MUX SHORT TO VOLTAGE

TEST	ACTION	APPLICABILITY
1	NOTE: When this code is present, the VTSS indicator will stay on solid during the arming process. With the DRBIII®, record and erase DTC's. With the DRBIII®, read DTCs. Remove the key and operate the door locks several times from the Right Cylinder Lock Switch while monitoring the DRBIII®. Wait 10 seconds. With the DRBIII®, read DTCs. Are there any Power Door Lock related DTC's? No → Go To 2 Yes → Refer to symptom list for problems related to POWER DOOR LOCKS. Perform BODY VERIFICATION TEST - VER 1.	All
2	With the DRBIII® in Sensors, read the RIGHT CYL LOCK SW voltage. Does the DRBIII® display 4.2 volts or greater? Yes → Go To 3 No → Disconnect the BCM harness connector(s). Check connectors - Clean/repair as necessary. If okay, replace the Body Control Module. Perform BODY VERIFICATION TEST - VER 1.	All
3	Disconnect the Right Cylinder Lock Switch connector. Using a 12-volt test light connected to 12-volts, check the Ground circuit. Does the test light illuminate brightly? Yes → Go To 4 No → Repair the Ground circuit for an open. Perform BODY VERIFICATION TEST - VER 1.	All

*RIGHT CYLINDER LOCK SWITCH INOPERATIVE — Continued

TEST	ACTION	APPLICABILITY
4	Disconnect the Right Cylinder Lock Switch connector. Measure the voltage between Cylinder Lock Switch Mux circuit and ground. Select the voltage present. Below 4.2 volts. Repair the Cylinder Lock Switch Mux circuit for an open. Perform BODY VERIFICATION TEST - VER 1. Between 4.3 and 5.2 volts. Replace the Cylinder Lock Switch. Perform BODY VERIFICATION TEST - VER 1. Above 5.3 volts. Go To 5	All
5	Disconnect the Right Cylinder Door Lock Switch connector. Disconnect the Body Control Module C3 connector. **NOTE: Check connectors - Clean/repair as necessary.** Turn the ignition on. Measure the voltage between Right Cylinder Lock Switch Mux circuit and Ground in the harness connector. Is there any voltage present? Yes → Repair the Cylinder Lock Switch Mux circuit for a short to voltage. Perform BODY VERIFICATION TEST - VER 1. No → Replace the Body Control Module. Perform BODY VERIFICATION TEST - VER 1.	All

Symptom:

AMBIENT TEMPERATURE SENSOR CIRCUIT OPEN

When Monitored and Set Condition:

AMBIENT TEMPERATURE SENSOR CIRCUIT OPEN

When Monitored: Whenever the Power Liftgate Module is awake.

Set Condition: If the module senses a resistance above 382K ohms on the Liftgate Temperature Sensor Signal circuit, this code will set. The normal range for the sensor is 1.2K to 382K ohms. At room temperature (68° F) the resistance will be between 11.2 K and 13.5K ohms.

POSSIBLE CAUSES
DTC PRESENT
POWER LIFTGATE MODULE - TEMPERATURE SENSE OPEN
LIFTGATE TEMPERATURE SENSOR SIGNAL WIRE OPEN
GROUND WIRE OPEN
LIFTGATE TEMPERATURE SENSOR

TEST	ACTION	APPLICABILITY
1	With the DRBIII®, record and erase DTC's. Turn the ignition off, wait 10 seconds, then turn the ignition on. Operate the liftgate several times. With the DRBIII®, read DTCs. Does the DRBIII® display AMBIENT TEMPERATURE SENSOR CIRCUIT OPEN? Yes → Go To 2 No → Using the wiring diagram/schematic as a guide, inspect the wiring and connectors for an intermittent condition. Perform BODY VERIFICATION TEST - VER 1.	All
2	Remove the power liftgate motor trim panel. Disconnect the Power Liftgate Module C2 connector. Measure the resistance of the liftgate Temperature Sensor Signal circuit to the Ground circuit (cavity 20) in the PLG C2 connector. Is the resistance between 1.2k and 382K ohms? Yes → Replace the Power Liftgate Module. Perform BODY VERIFICATION TEST - VER 1. No → Go To 3	All

AMBIENT TEMPERATURE SENSOR CIRCUIT OPEN — Continued

TEST	ACTION	APPLICABILITY
3	Remove the power liftgate motor trim panel. Disconnect the Power Liftgate Module C2 connector. Disconnect the License Lamp (light bar) connector. Measure the resistance of the liftgate Temperature Sensor Signal circuit between the License Lamp connector and the PLG C2 connector. Is the resistance below 5.0 ohms? Yes → Go To 4 No → Repair the Liftgate Temperature Sensor Signal circuit for an open. Perform BODY VERIFICATION TEST - VER 1.	All
4	Remove the power liftgate motor trim panel. Disconnect the Power Liftgate Module C2 connector. Disconnect the License Lamp (light bar) connector. Measure the resistance of the Ground circuit between the PLG C2 connector (cavity 20) and the License Lamp connector (cavity 8). Is the resistance below 5.0 ohms Yes → Go To 5 No → Repair the Liftgate Temperature Sensor Ground wire for an open. Perform BODY VERIFICATION TEST - VER 1.	All
5	If there are no possible causes remaining, view repair. Repair Replace the Liftgate Temperature Sensor (light bar). Perform BODY VERIFICATION TEST - VER 1.	All

Symptom:
AMBIENT TEMPERATURE SENSOR CIRCUIT SHORT TO GROUND

When Monitored and Set Condition:

AMBIENT TEMPERATURE SENSOR CIRCUIT SHORT TO GROUND

When Monitored: Whenever the Power Liftgate Module is awake.

Set Condition: If the module senses a resistance below 1000 ohms on the Liftgate Temperature Sensor Signal circuit, this code will set. The normal range for the sensor is 1.2K to 382K ohms. At room temperature (68° F) the resistance will be between 11.2 K and 13.5K ohms.

POSSIBLE CAUSES
DTC PRESENT
LIFTGATE TEMPERATURE SENSOR SIGNAL CIRCUIT SHORT TO GROUND.
POWER LIFTGATE MODULE - TEMP SENSE SHORT TO GROUND
LIFTGATE TEMPERATURE SENSOR SIGNAL WIRE SHORT TO GROUND WIRE
LIFTGATE TEMPERATURE SENSOR

TEST	ACTION	APPLICABILITY
1	With the DRBIII®, record and erase DTC's. Turn the ignition off, wait 10 seconds, then turn the ignition on. Operate the liftgate several times. With the DRBIII®, read DTCs. Does the DRBIII® display AMBIENT TEMPERATURE SENSOR CIRCUIT SHORT TO GROUND? Yes → Go To 2 No → Using the wiring diagram/schematic as a guide, inspect the wiring and connectors for an intermittent condition. Perform BODY VERIFICATION TEST - VER 1.	All
2	Remove the power liftgate motor trim panel. Disconnect the Power Liftgate Module C2 connector. Measure the resistance between ground and the liftgate Temperature Sensor Signal circuit. Is the resistance below 5000.0 ohms? Yes → Repair the Liftgate Temperature Sensor Signal circuit for a short to ground. Perform BODY VERIFICATION TEST - VER 1. No → Go To 3	All

AMBIENT TEMPERATURE SENSOR CIRCUIT SHORT TO GROUND — Continued

TEST	ACTION	APPLICABILITY
3	Remove the power liftgate motor trim panel. Disconnect the Power Liftgate Module C2 connector. Measure the resistance of the liftgate Temperature Sensor Signal circuit to the Ground circuit (cavity 20) in the PLG C2 connector. Is the resistance below 1000.0 ohms? Yes → Go To 4 No → Replace the Power Liftgate Module. Perform BODY VERIFICATION TEST - VER 1.	All
4	Remove the power liftgate motor trim panel. Disconnect the Power Liftgate Module C2 connector. Disconnect the License Lamp (light bar) connector. Measure the resistance of the liftgate Temperature Sensor Signal circuit to the Ground circuit (cavity 20) in the PLG C2 connector. Is the resistance below 1000.0 ohms Yes → Repair the Liftgate Temperature Sensor Signal wire for a short to the Ground wire. Perform BODY VERIFICATION TEST - VER 1. No → Replace the Liftgate Temperature Sensor (light bar). Perform BODY VERIFICATION TEST - VER 1.	All

Symptom:

CONTROL MODULE FAILURE - INTERNAL FAILURE

When Monitored and Set Condition:

CONTROL MODULE FAILURE - INTERNAL FAILURE

When Monitored: Anytime the module is awake.

Set Condition: Whenever the module senses an internal failure (EEPROM, ROM, ADC) this code will set. The module must be replaced.

POSSIBLE CAUSES
POWER LIFTGATE MODULE - INTERNAL FAILURE

TEST	ACTION	APPLICABILITY
1	View repair. Repair Replace the Power Liftgate Module. Perform BODY VERIFICATION TEST - VER 1.	All

Symptom:
INCOMPLETE LATCH CINCH - NO PAWL TRANSITION

When Monitored and Set Condition:

INCOMPLETE LATCH CINCH - NO PAWL TRANSITION

When Monitored: Whenever the power liftgate in performing a cinching operation.

Set Condition: The pawl switch was not detected as returning to ground during the transition between secondary and primary cinch operation. NOTE: The liftgate may not be fully cinched during this condition. The liftgate may cinch to primary but not be fully seated and may pop off back to secondary.

POSSIBLE CAUSES
DTC PRESENT
BINDING LIFTGATE
GROUND WIRE OPEN
LIFTGATE PAWL SWITCH SENSE WIRE OPEN
LIFTGATE PAWL SWITCH SENSE WIRE SHORT TO GROUND
PAWL SWITCH

TEST	ACTION	APPLICABILITY
1	**NOTE: This DTC will only set after the cinching operation. This may make it difficult to reproduce.** With the DRBIII®, record and erase DTC's. Turn the ignition off, wait 10 seconds, then turn the ignition on. Operate the power liftgate several times if possible. With the DRBIII®, read ACTIVE DTCs. Does the DRBIII® display INCOMPLETE LATCH CINCH - NO PAWL TRANSITION? Yes → Go To 2 No → Using the wiring diagram/schematic as a guide, inspect the wiring and connectors for an intermittent condition. Operate the door several times and check for any binding or other obstructions. Perform BODY VERIFICATION TEST - VER 1.	All
2	Examine the liftgate for proper fit and alignment, lose/hard or torn seals, misaligned latch striker or anything that would cause an obstruction to proper operation. Manually operate the liftgate of a known good vehicle and notice the effort needed to open and close. Compare the effort needed on the disabled liftgate. Does it take more effort to operate the liftgate than it should? Yes → Refer to Service information for the related symptom(s). Perform BODY VERIFICATION TEST - VER 1. No → Go To 3	All

INCOMPLETE LATCH CINCH - NO PAWL TRANSITION — Continued

TEST	ACTION	APPLICABILITY
3	Disconnect the Power Liftgate C2 connector. Disconnect the Liftgate Cinch/Release Motor connector. Measure the resistance of the Ground wire between the PLG C2 connector (cavity 20) and the Liftgate Cinch/Release Motor connector (cavity 1). Wiggle the harness while observing the ohmmeter. Is the resistance below 5.0 ohms? Yes → Go To 4 No → Repair the Ground wire for an open. Perform BODY VERIFICATION TEST - VER 1.	All
4	Disconnect the Power Liftgate Module C2 connector. Disconnect the Liftgate Cinch/Release Motor connector. Measure the resistance of the Liftgate Pawl Switch Sense wire between the PLG C2 connector and the Liftgate Cinch/Release Motor connector. Wiggle the harness while observing the ohmmeter. Is the resistance below 5.0 ohms? Yes → Go To 5 No → Repair the Liftgate Pawl Switch Sense wire for an open. Perform BODY VERIFICATION TEST - VER 1.	All
5	Disconnect the Power Liftgate Module C2 connector. Disconnect the Liftgate Cinch/Release Motor connector. Measure the resistance between ground and the Liftgate Pawl Switch Sense circuit. Wiggle the harness while observing the ohmmeter. Is the resistance below 1000.0 ohms? Yes → Repair the Liftgate Pawl Switch Sense wire for a short to ground. Perform BODY VERIFICATION TEST - VER 1. No → Go To 6	All
6	If there are no possible causes remaining, view repair. Repair Replace the Pawl Switch (latch assembly). Perform BODY VERIFICATION TEST - VER 1.	All

Symptom:
INCOMPLETE LATCH CINCH - OVERCURRENT

When Monitored and Set Condition:

INCOMPLETE LATCH CINCH - OVERCURRENT

When Monitored: Whenever the power liftgate is performing a cinching operation.

Set Condition: The latch motor stall current of 6.2 amps has been detected, with no pawl or ratchet failure. This code is set during the first stage of the power cinching operation.

POSSIBLE CAUSES
DTC PRESENT
BINDING LIFTGATE
LIFTGATE LATCH CINCH DRIVER WIRE OPEN
LIFTGATE LATCH RELEASE DRIVER OPEN
LIFTGATE LATCH CINCH DRIVER WIRE SHORT TO GROUND
LIFTGATE LATCH CINCH DRIVER WIRE SHORT TO HARNESS GROUND
LIFTGATE LATCH RELEASE DRIVER WIRE SHORT TO GROUND
LIFTGATE LATCH RELEASE DRIVER WIRE SHORT TO HARNESS GROUND
LATCH ASSEMBLY

TEST	ACTION	APPLICABILITY
1	With the DRBIII®, record and erase DTC's. Turn the ignition off, wait 10 seconds, then turn the ignition on. Operate the power liftgate several times if possible. With the DRBIII®, read ACTIVE DTCs. Does the DRBIII® display INCOMPLETE LATCH CINCH - OVERCURRENT? Yes → Go To 2 No → Using the wiring diagram/schematic as a guide, inspect the wiring and connectors for an intermittent condition. Operate the liftgate several times and check for any binding or other obstructions. Perform BODY VERIFICATION TEST - VER 1.	All
2	Examine the liftgate for proper alignment, worn or binding hinges, weak liftgate prop assembly, loose/ hard weatherstrip, and gear teeth on the power liftgate motor assembly for wear or anything that would cause an obstruction to proper operation. If necessary manually operate the power liftgate on a known good vehicle and notice the effort needed to open and close for comparison. Especially notice the effort needed to unlatch and close the liftgate. Were there any mechanical problems found? Yes → Refer to Service information for the related symptom(s). Perform BODY VERIFICATION TEST - VER 1. No → Go To 3	All

INCOMPLETE LATCH CINCH - OVERCURRENT — Continued

TEST	ACTION	APPLICABILITY
3	Turn the ignition off. Disconnect the Power Liftgate Module C2 connector. Disconnect the Liftgate Cinch/Release Motor connector. Measure the resistance of the Liftgate Latch Cinch Driver circuit between the Power Liftgate Module C2 connector and the Liftgate Cinch/Release Motor connector. Wiggle the harness and check for an intermittent open condition. Is the resistance below 5.0 ohms? Yes → Go To 4 No → Repair the Liftgate Latch Cinch Driver wire for an open. Perform BODY VERIFICATION TEST - VER 1.	All
4	Turn the ignition off. Disconnect the Power Liftgate Module C2 connector. Disconnect the Liftgate Cinch/Release Motor connector. Measure the resistance of the Liftgate Latch Release Driver circuit between the Power Liftgate Module C2 connector and the Liftgate Cinch/Release Motor connector. Wiggle the harness and check for an intermittent open condition. Is the resistance below 5.0 ohms? Yes → Go To 5 No → Repair the Liftgate Latch Release Driver wire for an open. Perform BODY VERIFICATION TEST - VER 1.	All
5	Turn the ignition off. Disconnect the Power Liftgate Module C2 connector. Disconnect the Liftgate Cinch/Release Motor connector. Measure the resistance between ground and the Liftgate Latch Cinch Driver circuit. Wiggle the harness and check for an intermittent short condition. Is the resistance below 1000.0 ohms? Yes → Go To 6 No → Repair the Liftgate Latch Cinch Driver wire for a short to ground. Perform BODY VERIFICATION TEST - VER 1.	All
6	Turn the ignition off. Disconnect the Power Liftgate Module C2 connector. Disconnect the Liftgate Cinch/Release Motor connector. Measure the resistance between the Ground circuit (cavity 20) and the Liftgate Latch Cinch Driver circuit. Wiggle the harness and check for an intermittent short condition. Is the resistance below 1000.0 ohms? Yes → Go To 7 No → Repair the Liftgate Latch Cinch Driver wire for a short to the Ground circuit. Perform BODY VERIFICATION TEST - VER 1.	All

INCOMPLETE LATCH CINCH - OVERCURRENT — Continued

TEST	ACTION	APPLICABILITY
7	Turn the ignition off. Disconnect the Power Liftgate Module C2 connector. Disconnect the Liftgate Cinch/Release Motor connector. Measure the resistance between ground and the Liftgate Latch Release Driver circuit. Wiggle the harness and check for an intermittent short condition. Is the resistance below 1000.0 ohms? Yes → Go To 8 No → Repair the Liftgate Latch Release Driver wire for a short to ground. Perform BODY VERIFICATION TEST - VER 1.	All
8	Turn the ignition off. Disconnect the Power Liftgate Module C2 connector. Disconnect the Liftgate Cinch/Release Motor connector. Measure the resistance between the Ground circuit (cavity 20) and the Liftgate Latch Release Driver circuit. Wiggle the harness and check for an intermittent short condition. Is the resistance below 1000.0 ohms? Yes → Go To 9 No → Repair the Liftgate Latch Release Driver wire for a short to the Ground circuit. Perform BODY VERIFICATION TEST - VER 1.	All
9	If there are no possible causes remaining, view repair. Repair Replace the Latch Assembly. Perform BODY VERIFICATION TEST - VER 1.	All

Symptom:
INCOMPLETE LATCH RELEASE - RATCHET SWITCH FAILURE

When Monitored and Set Condition:

INCOMPLETE LATCH RELEASE - RATCHET SWITCH FAILURE

When Monitored: Whenever the power liftgate is performing a release operation.

Set Condition: The pawl switch was grounded but the ratchet switch remained open. This code will set only in the release operation.

POSSIBLE CAUSES
DTC PRESENT
BINDING DOOR
POWER LIFTGATE MODULE - RATCHET CIRCUIT
GROUND WIRE OPEN
LIFTGATE AJAR SWITCH SENSE WIRE OPEN
RATCHET SWITCH

TEST	ACTION	APPLICABILITY
1	**NOTE: This DTC will only set during the releasing operation after the 4 second time out. This may make it difficult to reproduce.** With the DRBIII®, record and erase DTC's. Turn the ignition off, wait 10 seconds, then turn the ignition on. Operate the power liftgate several times if possible. With the DRBIII®, read ACTIVE DTCs. Does the DRBIII® display INCOMPLETE LATCH RELEASE - RATCHET SWITCH FAILURE? Yes → Go To 2 No → Using the wiring diagram/schematic as a guide, inspect the wiring and connectors for an intermittent condition. Operate the door several times and check for any binding or other obstructions. Perform BODY VERIFICATION TEST - VER 1.	All
2	Examine the liftgate for proper fit and alignment, loose/ hard or torn seals, worn teeth on the gears or anything that would cause an obstruction to proper operation. Manually operate the liftgate of a known good vehicle and notice the effort needed to open and close. Compare the effort needed on the disabled liftgate. Especially notice the effort needed to unlatch and close the liftgate. Does it take more effort to operate the liftgate than it should? Yes → Refer to Service information for the related symptom(s). Perform BODY VERIFICATION TEST - VER 1. No → Go To 3	All

INCOMPLETE LATCH RELEASE - RATCHET SWITCH FAILURE — Continued

TEST	ACTION	APPLICABILITY
3	With the DRBIII® in Inputs/Outputs, read the RATCHET state. Open the liftgate to full open position. Using a screwdriver, click the latch to the second detent while observing the DRBIII®. Unlatch the latch by pressing the handle switch or using the key and observe the DRBIII® for a state change. Repeat this step several times while moving the liftgate in different positions and wiggling the wiring harness to check for an intermittent short. Did the DRB111® show the switch state changes correctly every time? Yes → Replace the Power Liftgate Module. Perform BODY VERIFICATION TEST - VER 1. No → Go To 4	All
4	Disconnect the Power Liftgate C2 connector. Disconnect the Liftgate Cinch/Release Motor connector. Measure the resistance of the Ground wire between the PLG C2 connector (cavity 20) and the Liftgate Cinch/Release Motor connector (cavity 1). Wiggle the harness while observing the ohmmeter. Is the resistance below 5.0 ohms? Yes → Go To 5 No → Repair the Ground wire for an open. Perform BODY VERIFICATION TEST - VER 1.	All
5	Disconnect the Power Liftgate Module C2 connector. Disconnect the Liftgate Cinch/Release Motor connector (latch assembly). Measure the resistance of the Liftgate Ajar Switch Sense wire between the PLG C2 connector and the Liftgate Cinch/Release Motor connector. Wiggle the harness and move the liftgate in different positions while observing the ohmmeter. Is the resistance below 5.0 ohms? Yes → Go To 6 No → Repair the Liftgate Ajar Switch Sense wire for an open. Perform BODY VERIFICATION TEST - VER 1.	All
6	If there are no possible causes remaining, view repair. Repair Replace the Ratchet Switch (latch assembly). Perform BODY VERIFICATION TEST - VER 1.	All

Symptom:
INCOMPLETE LATCH RELEASE- OVER CURRENT

When Monitored and Set Condition:

INCOMPLETE LATCH RELEASE- OVER CURRENT

When Monitored: Whenever the power liftgate latch is operated.

Set Condition: The latch motor stall current of 6.2 amps was detected during a non-redundant release. The main causes of this code setting is some type of obstruction during the release or excessive draw on the motor. This code is set during the releasing operation.

POSSIBLE CAUSES
DTC PRESENT
BINDING DOOR
PAWL OR RATCHET SWITCH STUCK
CINCH RELEASE MOTOR ASSEMBLY

TEST	ACTION	APPLICABILITY
1	With the DRBIII®, record and erase DTC's. Turn the ignition off, wait 10 seconds, then turn the ignition on. Operate the power liftgate several times if possible. With the DRBIII®, read ACTIVE DTCs. Does the DRBIII® display INCOMPLETE LATCH RELEASE - OVER CURRENT? Yes → Go To 2 No → Check for any other PLG DTC's before proceeding. If there are none, operate the liftgate several times and check for any binding or other obstructions. Perform BODY VERIFICATION TEST - VER 1.	All
2	Examine the liftgate for proper fit and alignment, lose/ hard or torn seals, worn teeth on the rack and gear (lower drive unit) or anything that would cause an obstruction to proper operation. Manually operate the liftgate of a known good vehicle and notice the effort needed to open and close. Compare the effort needed on the disabled liftgate. Especially notice the effort needed to unlatch and close the liftgate. Does it take more effort to operate the liftgate than it should? Yes → Refer to Service information for the related symptom(S). Perform BODY VERIFICATION TEST - VER 1. No → Go To 3	All

INCOMPLETE LATCH RELEASE- OVER CURRENT — Continued

TEST	ACTION	APPLICABILITY
3	With the DRBIII® in Inputs/Outputs, read the PAWL SW and the RATCHET SW states. Open and close the liftgate manually and observe the Ratchet and Pawl Switch states. Do both switches toggle from open to close? No → Replace the Cinch Release Motor (Latch) Assembly. Perform BODY VERIFICATION TEST - VER 1. Yes → Lubricate the latch and check for any sticking conditions. If unable to isolate problem, replace the Cinch Release Motor (Latch Assembly). Perform BODY VERIFICATION TEST - VER 1.	All

Symptom:
INCOMPLETE LATCH RELEASE- PAWL SWITCH FAILURE

When Monitored and Set Condition:

INCOMPLETE LATCH RELEASE- PAWL SWITCH FAILURE

When Monitored: Whenever the power liftgate is operating in an opening direction.

Set Condition: The release operation was not completed due to the non-transition of the pawl switch during the power release operation. The ratchet switch was detected as grounded but the pawl remained open. This code is set during the power releasing operation from a fully closed liftgate.

POSSIBLE CAUSES
DTC PRESENT
BINDING DOOR
POWER LIFTGATE MODULE - PAWL CIRCUIT
GROUND WIRE OPEN
PAWL SWITCH SENSE WIRE OPEN
PAWL SWITCH

TEST	ACTION	APPLICABILITY
1	**NOTE: This DTC will only set during the cinching operation after the 4 second time out. This may make it difficult to reproduce.** With the DRBIII®, record and erase DTC's. Turn the ignition off, wait 10 seconds, then turn the ignition on. Operate the power liftgate several times if possible. With the DRBIII®, read ACTIVE DTCs. Does the DRBIII® display INCOMPLETE LATCH RELEASE - PAWL SWITCH FAILURE? Yes → Go To 2 No → Using the wiring diagram/schematic as a guide, inspect the wiring and connectors for an intermittent condition. Operate the door several times and check for any binding or other obstructions. Perform BODY VERIFICATION TEST - VER 1.	All
2	Examine the liftgate for proper fit and alignment, loose/ hard or torn seals, worn teeth on the gears or anything that would cause an obstruction to proper operation. Manually operate the liftgate of a known good vehicle and notice the effort needed to open and close. Compare the effort needed on the disabled liftgate. Especially notice the effort needed to unlatch and close the liftgate. Does it take more effort to operate the liftgate than it should? Yes → Refer to Service information for the related symptom(s). Perform BODY VERIFICATION TEST - VER 1. No → Go To 3	All

INCOMPLETE LATCH RELEASE- PAWL SWITCH FAILURE — Continued

TEST	ACTION	APPLICABILITY
3	With the DRBIII® in Inputs/Outputs, read the PAWL state. Open the liftgate to full open position. Using a screwdriver, click the latch to the first detent while observing the DRB111®. Unlatch the latch by pressing the handle switch or using the key and observe the DRB111® for a state change. Repeat this step several times while moving the liftgate in different positions and wiggling the wiring harness to check for an intermittent open.. Did the DRB111® show the switch state changes correctly every time? Yes → Replace the Power Liftgate Module. Perform BODY VERIFICATION TEST - VER 1. No → Go To 4	All
4	Disconnect the Power Liftgate C2 connector. Disconnect the Liftgate Cinch/Release Motor connector. Measure the resistance of the Ground wire between the PLG C2 connector (cavity 20) and the Liftgate Cinch/Release Motor connector (cavity 1). Wiggle the harness while observing the ohmmeter. Is the resistance below 5.0 ohms? Yes → Go To 5 No → Repair the Ground wire for an open. Perform BODY VERIFICATION TEST - VER 1.	All
5	Disconnect the Liftgate Control Module C2 connector. Disconnect the Liftgate Cinch/Release Motor connector (latch assembly). Measure the resistance of the Liftgate Pawl Switch Sense circuit between the PLG C2 connector and the Liftgate Cinch/Release Motor connector. Wiggle the harness while observing the ohmmeter. Is the resistance below 5.0 ohms? Yes → Go To 6 No → Repair the Liftgate Pawl Switch Sense wire for an open. Perform BODY VERIFICATION TEST - VER 1.	All
6	If there are no possible causes remaining, view repair. Repair Replace the Liftgate Pawl Switch (latch assembly). Perform BODY VERIFICATION TEST - VER 1.	All

Symptom:

INCOMPLETE LATCH RELEASE- SECTOR GEAR RETURN FAILURE

When Monitored and Set Condition:

INCOMPLETE LATCH RELEASE- SECTOR GEAR RETURN FAILURE

When Monitored: Whenever the power liftgate is operating.

Set Condition: If the cinch release motor takes longer than 700 ms to perform a release operation this code will set. The main causes of this code setting is some type of sticking situation preventing the sector gear in the cinch release motor assembly to return to its neutral position.

POSSIBLE CAUSES
DTC PRESENT
BINDING LIFTGATE
LIFTGATE CINCH RELEASE MOTOR ASSEMBLY

TEST	ACTION	APPLICABILITY
1	With the DRBIII®, record and erase DTC's. Turn the ignition off, wait 10 seconds, then turn the ignition on. Operate the power liftgate several times if possible. With the DRBIII®, read ACTIVE DTCs. Does the DRBIII® display INCOMPLETE LATCH RELEASE - SECTOR GEAR RETURN FAILURE? Yes → Go To 2 No → Using the wiring diagram/schematic as a guide, inspect the wiring and connectors for an intermittent condition. Operate the door several times and check for any binding or other obstructions. Perform BODY VERIFICATION TEST - VER 1.	All
2	Examine the liftgate for proper fit and alignment, loose/hard or torn seals, struts or anything that would cause an obstruction to proper operation. Manually operate the liftgate of a known good vehicle and notice the effort needed to open and close. Compare the effort needed on the disabled liftgate. Especially notice the effort needed to unlatch and close the liftgate. Does it take more effort to operate the liftgate than it should? Yes → Refer to Service information for the related symptom(s). Perform BODY VERIFICATION TEST - VER 1. No → Replace the Liftgate Cinch Release Motor Assembly.. Perform BODY VERIFICATION TEST - VER 1.	All

Symptom:

INCOMPLETE POWER CLOSE - FULL OPEN SWITCH FAILURE/ NON ENGAGEMENT

When Monitored and Set Condition:

INCOMPLETE POWER CLOSE - FULL OPEN SWITCH FAILURE/NON ENGAGEMENT

When Monitored: Whenever the power liftgate is closing.

Set Condition: The Full Open Switch was detected as closed before 200 hall effect pulses were counted since the start of the close operation. May be triggered by an intermittent full open switch failure, or non gear engagement

POSSIBLE CAUSES
DTC PRESENT
OBSTRUCTION OR STICKING FULL OPEN SWITCH
FULL OPEN SWITCH SHORT TO GROUND
POWER LIFTGATE MOTOR ASSEMBLY - FULL OPEN SWITCH

TEST	ACTION	APPLICABILITY
1	With the DRBIII®, record and erase DTC's. Turn the ignition off, wait 10 seconds, then turn the ignition on. Operate the power liftgate several times if possible. With the DRBIII®, read ACTIVE DTCs. Does the DRBIII® display INCOMPLETE POWER CLOSE - FULL OPEN SWITCH FAILURE? Yes → Go To 2 No → Using the wiring diagram/schematic as a guide, inspect the wiring and connectors for an intermittent condition. Operate the liftgate several times and check for any binding cables or other obstructions. Perform BODY VERIFICATION TEST - VER 1.	All
2	Examine the liftgate for proper fit and alignment, foreign material in the drive unit or anything that would cause an obstruction to proper operation of the Full Open Switch. With the DRBIII® in Inputs/Outputs, read the FULL OPEN SWITCH state. Manually operate the liftgate while monitoring the DRBIII®. Does the switch status change smoothly as the liftgate is pulled down from the full open position. Yes → Go To 3 No → Replace the Full Open Switch in accordance with the Service Information. Perform BODY VERIFICATION TEST - VER 1.	All

INCOMPLETE POWER CLOSE - FULL OPEN SWITCH FAILURE/NON ENGAGEMENT — Continued

TEST	ACTION	APPLICABILITY
3	With the DRBIII® in Inputs/Outputs, read the FULL OPEN SWITCH state. Open the liftgate to mid position. While monitoring the DRBIII®, wiggle the wiring harness from the Power Liftgate Module to the Full Open Switch on the Power Liftgate Motor assembly. Did the switch status ever change? Yes → Repair the Liftgate Full Open Switch Sense circuit for a short to ground. Perform BODY VERIFICATION TEST - VER 1. No → Go To 4	All
4	If there are no possible causes remaining, view repair. Repair Replace the Power Liftgate Motor assembly. Perform BODY VERIFICATION TEST - VER 1.	All

Symptom:

INCOMPLETE POWER CLOSE - EXCESSIVE H.E. COUNTS/NON ENGAGEMENT

When Monitored and Set Condition:

INCOMPLETE POWER CLOSE - EXCESSIVE H.E. COUNTS/NON ENGAGEMENT

When Monitored: During Power Liftgate closing cycle.

Set Condition: If the PLG Module detects that the Power Liftgate Motor has generated more than 700 hall effect pulses during a full power cycle, this code will set.

POSSIBLE CAUSES
DTC PRESENT
POWER LIFTGATE MODULE - HALL EFFECT OPEN
BINDING LIFTGATE
LIFTGATE GEAR ENGAGE DRIVER WIRE OPEN
LIFTGATE GEAR ENGAGE DRIVER WIRE SHORT TO GROUND
LIFTGATE GEAR ENGAGE DRIVER WIRE SHORT TO THE LIFTGATE GEAR DISENGAGE WIRE.
LIFTGATE GEAR DISENGAGE DRIVER WIRE OPEN
LIFTGATE GEAR DISENGAGE DRIVER WIRE SHORT TO GROUND
POWER LIFTGATE MODULE - GEAR ENGAGE CIRCUIT OPEN
POWER LIFTGATE MOTOR
POWER LIFTGATE MOTOR - GEAR ENGAGE OPEN
POWER LIFTGATE MOTOR - GEAR ENGAGE SHORT TO GROUND
POWER LIFTGATE MOTOR - GEAR ENGAGE SHORTED

TEST	ACTION	APPLICABILITY
1	With the DRBIII®, record and erase DTC's. Turn the ignition off, wait 10 seconds, then turn the ignition on. Operate the Power Liftgate several times from stop to stop if possible. With the DRBIII®, read ACTIVE DTCs. Does the DRBIII® display INCOMPLETE POWER CLOSE - EXCESSIVE H.E. COUNTS/NON ENGAGEMENT? Yes → Go To 2 No → Using the wiring diagram/schematic as a guide, inspect the wiring and connectors for an intermittent condition. Operate the liftgate several times and check for any binding conditions. Perform BODY VERIFICATION TEST - VER 1.	All

INCOMPLETE POWER CLOSE - EXCESSIVE H.E. COUNTS/NON ENGAGEMENT — Continued

TEST	ACTION	APPLICABILITY
2	Examine the liftgate for proper alignment, worn or binding hinges, weak liftgate prop assembly, loose/ hard weatherstrip, and gear teeth on the Power Liftgate Motor assembly for wear or anything that would cause an obstruction to proper operation. If necessary manually operate the power liftgate on a known good vehicle and notice the effort needed to open and close for comparison. Especially notice the effort needed to unlatch and close the liftgate. Were there any mechanical problems found? Yes → Refer to Service information for the related symptom(s). Perform BODY VERIFICATION TEST - VER 1. No → Go To 3	All
3	Operate the liftgate from the full closed position and put an obstacle in it's path to make it reverse. Did the door reverse back to the closed position? Yes → Go To 4 No → Replace the Power Liftgate Module. Perform BODY VERIFICATION TEST - VER 1.	All
4	Disconnect the Power Liftgate Module C2 connector. Measure the resistance between the Liftgate Gear Engage Driver circuit and the Liftgate Gear Disengage Driver circuit in the PLG Module connector. Select the resistance found. Below 5.0 ohms. Go To 5 Between 5.1 and 8.0 ohms. Go To 7 Above 8.1 ohms Go To 12	All
5	Disconnect the Power Liftgate Motor connector. Disconnect the Power Liftgate Control Module C2 connector. Measure the resistance between the Liftgate Gear Engage Driver circuit and the Liftgate Gear Disengage Driver circuit in the PLG Module connector. Is the resistance below 10000.0 ohms? Yes → Repair the Liftgate Gear Engage Driver wire for a short to the Liftgate Gear Disengage Driver wire. Perform BODY VERIFICATION TEST - VER 1. No → Go To 6	All
6	If there are no possible causes remaining, view repair. Repair Replace the Power Liftgate Motor Assembly. Perform BODY VERIFICATION TEST - VER 1.	All
7	Disconnect the Power Liftgate Module C2 connector. Measure the resistance between Ground and the Liftgate Gear Engage Driver circuit. Is the resistance below 10000.0 ohms? Yes → Go To 8 No → Go To 11	All

INCOMPLETE POWER CLOSE - EXCESSIVE H.E. COUNTS/NON ENGAGEMENT — Continued

TEST	ACTION	APPLICABILITY
8	Disconnect the Power Liftgate Motor connector. Disconnect the Power Liftgate Module C2 connector. Measure the resistance between ground and the Liftgate Gear Engage Driver circuit. Is the resistance below 10000.0 ohms? Yes → Repair the Liftgate Gear Engage Driver wire for a short to ground. Perform BODY VERIFICATION TEST - VER 1. No → Go To 9	All
9	Disconnect the Power Liftgate Motor connector. Disconnect the Power Liftgate Module C2 connector. Measure the resistance between ground and the Liftgate Gear Disengage Driver circuit. Is the resistance below 10000.0 ohms? Yes → Repair the Liftgate Gear Disengage Driver wire for a short to ground. Perform BODY VERIFICATION TEST - VER 1. No → Go To 10	All
10	If there are no possible causes remaining, view repair. Repair Replace the Power Liftgate Motor Assembly. Perform BODY VERIFICATION TEST - VER 1.	All
11	**NOTE: Ensure all connectors are connected before proceeding.** While back probing, measure the Voltage between the Liftgate Gear Engage Driver circuit and the Liftgate Gear Disengage Driver circuit at the PLG Module connector.. Operate the Power liftgate and observe the voltmeter Did the voltmeter read above 11.0 volts for at least 1 second while the liftgate was operating? Yes → Test Complete. No → Replace the Power Liftgate Module. Perform BODY VERIFICATION TEST - VER 1.	All
12	Disconnect the Power Liftgate Motor connector. Disconnect the Power Liftgate Module C2 connector. Measure the resistance of the Liftgate Gear Engage Driver circuit between the Power Liftgate Motor connector and the Power Liftgate Module C2 connector. Is the resistance below 5.0 ohms? Yes → Go To 13 No → Repair the Liftgate Gear Engage Driver wire for an open. Perform BODY VERIFICATION TEST - VER 1.	All
13	Disconnect the Power Liftgate Motor connector. Disconnect the Power Liftgate Module C2 connector. Measure the resistance of Liftgate Gear Disengage Driver circuit from the Motor connector to the PLG Module connector. Is the resistance below 5.0 ohms? Yes → Go To 14 No → Repair the Liftgate Gear Disengage Driver wire for an open. Perform BODY VERIFICATION TEST - VER 1.	All

INCOMPLETE POWER CLOSE - EXCESSIVE H.E. COUNTS/NON ENGAGEMENT — Continued

TEST	ACTION	APPLICABILITY
14	If there are no possible causes remaining, view repair. Repair Replace the Power Liftgate Motor Assembly. Perform BODY VERIFICATION TEST - VER 1.	All

Symptom:

INCOMPLETE POWER CLOSE - HALL EFFECT SIGNAL MISSING

When Monitored and Set Condition:

INCOMPLETE POWER CLOSE - HALL EFFECT SIGNAL MISSING

When Monitored: Whenever the power liftgate is performing a power close operation.

Set Condition: The PLG Module detects that the motor is rotating (monitors hall effect pulses) but no hall effect pulses are being detected. This code is set during the power close (2 second chime period, prior to liftgate movement) operation.

POSSIBLE CAUSES
DTC PRESENT
POWER LIFTGATE MODULE - HALL EFFECT OPEN
BINDING LIFTGATE
HALL EFFECT GROUND CIRCUIT OPEN
LIFTGATE HALL EFFECT SUPPLY WIRE OPEN
LIFTGATE HALL EFFECT SUPPLY WIRE SHORT TO GROUND
LIFTGATE HALL EFFECT SUPPLY WIRE SHORT TO HARNESS GROUND
LIFTGATE HALL EFFECT SIGNAL WIRE OPEN
LIFTGATE HALL EFFECT SIGNAL WIRE SHORT TO GROUND
LIFTGATE HALL EFFECT SIGNAL WIRE SHORT TO HARNESS GROUND
POWER LIFTGATE MOTOR ASSEMBLY

TEST	ACTION	APPLICABILITY
1	With the DRBIII®, record and erase DTC's. Turn the ignition off, wait 10 seconds, then turn the ignition on. **NOTE: NOTE: When this code is set, the module will abort the power close cycle and begin ″Clutch Pulsing″. This is where the module will cycle the Liftgate Clutch Driver until the gate stops moving (based on Optical Sensor inputs).** Operate the power liftgate several times from stop to stop if possible. With the DRBIII®, read ACTIVE DTCs. Does the DRBIII® display INCOMPLETE POWER CLOSE - HALL EFFECT SIGNAL MISSING? Yes → Go To 2 No → Using the wiring diagram/schematic as a guide, inspect the wiring and connectors for an intermittent condition. Operate the liftgate several times and check for any binding conditions. Perform BODY VERIFICATION TEST - VER 1.	All

INCOMPLETE POWER CLOSE - HALL EFFECT SIGNAL MISSING — Continued

TEST	ACTION	APPLICABILITY
2	Examine the liftgate for proper alignment, worn or binding hinges, weak liftgate prop assembly, loose/ hard weatherstrip, and gear teeth on the power liftgate motor assembly for wear or anything that would cause an obstruction to proper operation. If necessary manually operate the power liftgate on a known good vehicle and notice the effort needed to open and close for comparison. Especially notice the effort needed to unlatch and close the liftgate. Does it take more effort to operate the liftgate than it should? Yes → Refer to Service information for the related symptom(s). Perform BODY VERIFICATION TEST - VER 1. No → Go To 3	All
3	Operate the liftgate from the full open position and put an obstacle in its path to make it reverse. Did the liftgate reverse back to the open position? Yes → Go To 4 No → Replace the Power Liftgate Module. Perform BODY VERIFICATION TEST - VER 1.	All
4	Disconnect the Power Liftgate Motor connector. Using a 12-volt test light connected to 12-volts, check the Ground circuit. Does the test light illuminate brightly? Yes → Go To 5 No → Repair the hall effect ground circuit for an open. Perform BODY VERIFICATION TEST - VER 1.	All
5	Disconnect the Power Liftgate Motor connector. Disconnect the Power Liftgate Module C2 connector. Measure the resistance of the Liftgate Hall Effect Supply circuit between the Power Liftgate Motor connector and the Power Liftgate Module C2 connector. Is the resistance below 5.0 ohms? Yes → Go To 6 No → Repair the Liftgate Hall Effect Supply wire for an open. Perform BODY VERIFICATION TEST - VER 1.	All
6	Disconnect the Power Liftgate Motor connector. Disconnect the Power Liftgate Module C2 connector. Measure the resistance between ground and the Liftgate Hall Effect Supply circuit. Is the resistance below 100.0 ohms? Yes → Repair the Liftgate Hall Effect Supply wire for a short to ground. Perform BODY VERIFICATION TEST - VER 1. No → Go To 7	All
7	Disconnect the Power Liftgate Motor connector. Disconnect the Power Liftgate Module C2 connector. Measure the resistance between the Ground circuit (cavity 20) and the Liftgate Hall Effect Supply circuit. Is the resistance below 1000.0 ohms? Yes → Repair the Liftgate Hall Effect Supply wire for a short to the Ground circuit. Perform BODY VERIFICATION TEST - VER 1. No → Go To 8	All

INCOMPLETE POWER CLOSE - HALL EFFECT SIGNAL MISSING — Continued

TEST	ACTION	APPLICABILITY
8	Disconnect the Power Liftgate Motor connector. Disconnect the Power Liftgate Module C2 connector. Measure the resistance of the Liftgate Hall Effect Signal circuit between the Power Liftgate Motor connector and the Power Liftgate Module C2 connector. Is the resistance below 5.0 ohms? Yes → Go To 9 No → Repair the Liftgate Hall Effect Signal wire for an open. Perform BODY VERIFICATION TEST - VER 1.	All
9	Disconnect the Power Liftgate Motor connector. Disconnect the Power Liftgate Module C2 connector. Measure the resistance between ground and the Liftgate Hall Effect Signal circuit. Is the resistance below 100.0 ohms? Yes → Repair the Liftgate Hall Effect Signal wire for a short to ground. Perform BODY VERIFICATION TEST - VER 1. No → Go To 10	All
10	Disconnect the Power Liftgate Motor connector. Disconnect the Power Liftgate Module C2 connector. Measure the resistance between the Ground circuit (cavity 20) and the Liftgate Hall Effect Signal circuit. Is the resistance below 1000.0 ohms? Yes → Repair the Liftgate Hall Effect Signal wire for a short to the Ground circuit. Perform BODY VERIFICATION TEST - VER 1. No → Go To 11	All
11	If there are no possible causes remaining, view repair. Repair Replace the Power Liftgate Motor Assembly (hall effect switch). Perform BODY VERIFICATION TEST - VER 1.	All

Symptom:

INCOMPLETE POWER CLOSE - OVER CURRENT

When Monitored and Set Condition:

INCOMPLETE POWER CLOSE - OVER CURRENT

When Monitored: Anytime the liftgate is in a closing operation.

Set Condition: The drive motor stall current of over 24 amps has been detected for over 500 ms. or during the initial gear engagement the drive transistor is shorted, during a power close operation.

POSSIBLE CAUSES
DTC PRESENT
BINDING LIFTGATE
GROUND CIRCUIT OPEN
LIFTGATE CLOSE DRIVER CIRCUIT SHORT TO GROUND
LIFTGATE LATCH RELEASE DRIVER CIRCUIT SHORT TO GROUND
LIFTGATE LATCH RELEASE DRIVER CIRCUIT SHORT TO HARNESS GROUND
LIFTGATE GEAR ENGAGE DRIVER CIRCUIT SHORT TO GROUND
LIFTGATE GEAR ENGAGE DRIVER CIRCUIT SHORT TO HARNESS GROUND
LIFTGATE MODULE
POWER LIFTGATE MOTOR

TEST	ACTION	APPLICABILITY
1	With the DRBIII®, record and erase DTC's. Turn the ignition off, wait 10 seconds, then turn the ignition on. Operate the power liftgate several times (if possible). With the DRBIII®, read DTCs. Does the DRBIII® display INCOMPLETE POWER CLOSE- OVERCURRENT? Yes → Go To 2 No → Using the wiring diagram/schematic as a guide, inspect the wiring and connectors for an intermittent condition. Operate the liftgate several times and check for any binding conditions. Perform BODY VERIFICATION TEST - VER 1.	All

INCOMPLETE POWER CLOSE - OVER CURRENT — Continued

TEST	ACTION	APPLICABILITY
2	Examine the liftgate for proper alignment, worn or binding hinges, weak or binding liftgate prop rods, loose/ hard weatherstrip, and gear teeth on the power liftgate motor assembly for wear or anything that would cause an obstruction to proper operation. Compare the effort needed on the disabled vehicle. Especially notice the effort needed to unlatch and close the liftgate. Does it take more effort to operate the liftgate than it should? Yes → Refer to Service information for the related symptom(s). Perform BODY VERIFICATION TEST - VER 1. No → Go To 3	All
3	Turn the ignition off. Disconnect the Power Liftgate Module C1 connector. Using a 12-volt test light connected to 12-volts, check the Ground circuit. Wiggle the harness and check for an intermittent open condition. Does the test light illuminate brightly? Yes → Go To 4 No → Repair the Ground circuit for an open. Perform BODY VERIFICATION TEST - VER 1.	All
4	Turn the ignition off. Disconnect the Power Liftgate Module C1 connector. Measure the resistance between ground and the Liftgate Close Driver circuit. Wiggle the harness and check for an intermittent short circuit condition. Is the resistance below 1000.0 ohms? Yes → Repair the Liftgate Close Driver circuit for a short to ground. Perform BODY VERIFICATION TEST - VER 1. No → Go To 5	All
5	Turn the ignition off. Disconnect the Power Liftgate Module C2 connector. Measure the resistance between ground and the Liftgate Latch Release Driver circuit. Wiggle the harness and check for an intermittent short condition. Is the resistance below 1000.0 ohms? Yes → Repair the Liftgate Latch Release Driver circuit for a short to ground. Perform BODY VERIFICATION TEST - VER 1. No → Go To 6	All
6	Turn the ignition off. Disconnect the Power Liftgate Module C2 connector. Measure the resistance between the Ground circuit (cavity 20) and the Liftgate Latch Release Driver circuit. Wiggle the harness and check for an intermittent short condition. Is the resistance below 1000.0 ohms? Yes → Repair the Liftgate Latch Release Driver circuit for a short to the Ground circuit. Perform BODY VERIFICATION TEST - VER 1. No → Go To 7	All

INCOMPLETE POWER CLOSE - OVER CURRENT — Continued

TEST	ACTION	APPLICABILITY
7	Turn the ignition off. Disconnect the Power Liftgate Module C2 connector. Measure the resistance between ground and the Liftgate Gear Engage Driver circuit. Wiggle the harness and check for an intermittent short condition. Is the resistance below 1000.0 ohms? Yes → Repair the Liftgate Gear Engage Driver circuit for a short to ground. Perform BODY VERIFICATION TEST - VER 1. No → Go To 8	All
8	Turn the ignition off. Disconnect the Power Liftgate Module C2 connector. Measure the resistance between the Ground circuit (cavity 20) and the Liftgate Gear Engage Driver circuit. Wiggle the harness and check for an intermittent short condition. Is the resistance below 1000.0 ohms? Yes → Repair the Liftgate Gear Engage Driver circuit for a short to the Ground circuit. Perform BODY VERIFICATION TEST - VER 1. No → Go To 9	All
9	Ensure all module and motor connectors are connected at this time. Try to operate the liftgate in the close position. Did the motor start to close the liftgate but was very slow and labored extensively? Yes → Replace the Power Liftgate Motor assembly. Perform BODY VERIFICATION TEST - VER 1. No → Replace the Power Liftgate Module Perform BODY VERIFICATION TEST - VER 1.	All

Symptom:
INCOMPLETE POWER CLOSE - TRANSISTOR SHORTED

When Monitored and Set Condition:

INCOMPLETE POWER CLOSE - TRANSISTOR SHORTED

When Monitored: Whenever the power liftgate is performing a power close operation.

Set Condition: The Power Liftgate Module detects that the motor is rotating (monitors hall effect pulses) even though the controlled PWM rate is 0 percent. This DTC is set during the power close (2 second chime period, prior to movement of the liftgate) operation.

POSSIBLE CAUSES
DTC PRESENT
LIFTGATE OPEN DRIVER WIRE SHORT TO GROUND
POWER LIFTGATE MODULE SHORT TO GROUND
LIFTGATE CLOSE DRIVER WIRE SHORT TO GROUND
POWER LIFTGATE MOTOR

TEST	ACTION	APPLICABILITY
1	With the DRBIII®, record and erase DTC's. Turn the ignition off, wait 10 seconds, then turn the ignition on. Operate the power liftgate several times if possible. With the DRBIII®, read ACTIVE DTCs. Does the DRBIII® display INCOMPLETE POWER CLOSE - TRANSISTOR SHORTED? Yes → Go To 2 No → Using the wiring diagram/schematic as a guide, inspect the wiring and connectors for an intermittent condition. Operate the liftgate several times and check for any binding conditions. Perform BODY VERIFICATION TEST - VER 1.	All
2	Turn the ignition off. Disconnect the Power Liftgate Module C1 harness connector. Measure the resistance between ground and the Liftgate Open Driver circuit. Is the resistance below 1000.0 ohms? Yes → Go To 3 No → Replace the Power Liftgate Module. Perform BODY VERIFICATION TEST - VER 1.	All

INCOMPLETE POWER CLOSE - TRANSISTOR SHORTED — Continued

TEST	ACTION	APPLICABILITY
3	Turn the ignition off. Disconnect the Power Liftgate Module C1 harness connector. Disconnect the Power Liftgate Motor connector. Measure the resistance between ground and the Liftgate Open Driver circuit. Is the resistance below 1000.0 ohms? Yes → Repair the Liftgate Open Driver wire for a short to ground. Perform BODY VERIFICATION TEST - VER 1. No → Go To 4	All
4	Turn the ignition off. Disconnect the Power Liftgate Module C1 harness connector. Disconnect the Power Liftgate Motor connector. Measure the resistance between ground and the Liftgate Close Driver circuit. Is the resistance below 1000.0 ohms? Yes → Repair the Liftgate Close Driver wire for a short to ground. Perform BODY VERIFICATION TEST - VER 1. No → Replace the Power Liftgate Motor. Perform BODY VERIFICATION TEST - VER 1.	All

Symptom:

INCOMPLETE POWER CLOSE - VOLTAGE BELOW MINIMUM LEVEL

When Monitored and Set Condition:

INCOMPLETE POWER CLOSE - VOLTAGE BELOW MINIMUM LEVEL

When Monitored: Whenever the power liftgate is performing a power close operation.

Set Condition: The PLG Module detects that the voltage is below 9.5 volts during the power close operation.

POSSIBLE CAUSES
DTC PRESENT
MODULE VOLTAGE LOW
BINDING LIFTGATE
DRB OPERATING VOLTAGE LOW
PLG MODULE - HIGH RESISTANCE
POWER LIFTGATE MOTOR

TEST	ACTION	APPLICABILITY
1	With the DRBIII®, record and erase DTC's. Turn the ignition off, wait 10 seconds, then turn the ignition on. Operate the power liftgate several times if possible. With the DRBIII®, read DTCs. Does the DRBIII® display INCOMPLETE POWER CLOSE - VOLTAGE BELOW MINIMUM LEVEL? Yes → Go To 2 No → Using the wiring diagram/schematic as a guide, inspect the wiring and connectors for an intermittent condition. Operate the door several times and check for any binding conditions. Perform BODY VERIFICATION TEST - VER 1.	All
2	Examine the liftgate for proper fit and alignment, or anything that would cause an obstruction to proper operation. Check the prop rods to ensure liftgate will fall closed from the approximately 3/4 closed position. Does it take more effort to operate the liftgate than it should? Yes → Refer to Service information for the related symptom(s). Perform BODY VERIFICATION TEST - VER 1. No → Go To 3	All

INCOMPLETE POWER CLOSE - VOLTAGE BELOW MINIMUM LEVEL — Continued

TEST	ACTION	APPLICABILITY
3	**NOTE: Test the battery to ensure it is fully charged and in good condition before proceeding.** Turn the ignition off. Turn all lights and accessories off. With the DRBIII® in ″Power Liftgate″ ″Monitor Display″ ″PCI Bus Info″ read the ″Battery Voltage″ and compare it to the ″PLG Bat Volts Input″. **NOTE: If the difference is greater than 0.5 volts, backprobe the Fused B(+) at the module to verify.** Does the voltage vary more than 0.5 volts? Yes → Using the wiring diagram/schematic as a guide, inspect the wiring and connectors. Locate and repair the reason for the voltage drop. Perform BODY VERIFICATION TEST - VER 1. No → Go To 4	All
4	Turn the ignition off. Turn all lights and accessories off. With the DRBIII® in ″Power Liftgate″″ ″Monitor Display″ ″PCI Bus Info″ read the ″Battery Voltage″ and compare it to the ″PLG Bat Volts Input″. Operate the power liftgate and observe the voltage difference. **NOTE: If the difference is greater than 1.6 volts, backprobe the Fused B(+) at the module to verify.** Does the voltage vary more than 1.6 volts when the liftgate is operating? Yes → Using the wiring diagram/schematic as a guide, inspect the wiring and connectors. Locate and repair the reason for the voltage drop. Perform BODY VERIFICATION TEST - VER 1. No → Go To 5	All
5	Turn the ignition off. Turn all lights and accessories off. Open the Liftgate. Remove the left rear trim panel to gain access to the Power Liftgate Module. Remove the PLG module but leave it connected. Backprobe voltmeter leads between the Fused B(+) and the Liftgate Close Driver circuits in the PLG C1 connector. Operate the power liftgate in the CLOSED position and observe the voltage difference. Does the voltage vary more than 1.0 volts when the liftgate is operating?? Yes → Replace the Power Liftgate Module. Perform BODY VERIFICATION TEST - VER 1. No → Go To 6	All
6	If there are no possible causes remaining, view repair. Repair Check the wiring and connections from the module to the motor for high resistance. If the wiring is okay, replace the Power Liftgate Motor assembly. Perform BODY VERIFICATION TEST - VER 1.	All

Symptom:

INCOMPLETE POWER OPEN - FULL OPEN SWITCH FAILURE/ NON ENGAGEMENT

When Monitored and Set Condition:

INCOMPLETE POWER OPEN - FULL OPEN SWITCH FAILURE/NON ENGAGEMENT

When Monitored: During the Power Liftgate open cycle.

Set Condition: The Full Open Switch was detected as closed before 200 hall effect pulses were counted since the start of the open operation. May be triggered by an intermittent full open switch failure or a non gear engagement.

POSSIBLE CAUSES
DTC PRESENT
OBSTRUCTION OR STICKING FULL OPEN SWITCH
FULL OPEN SWITCH SHORT TO GROUND
POWER LIFTGATE MOTOR ASSEMBLY - FULL OPEN SWITCH

TEST	ACTION	APPLICABILITY
1	With the DRBIII®, record and erase DTC's. Turn the ignition off, wait 10 seconds, then turn the ignition on. Operate the power liftgate several times if possible. With the DRBIII®, read ACTIVE DTCs. Does the DRBIII® display INCOMPLETE POWER OPEN - FULL OPEN SWITCH FAILURE? Yes → Go To 2 No → Using the wiring diagram/schematic as a guide, inspect the wiring and connectors for an intermittent condition. Operate the liftgate several times and check for any binding or obstructions. Perform BODY VERIFICATION TEST - VER 1.	All
2	Examine the liftgate for proper fit and alignment, foreign material in the drive unit or anything that would cause an obstruction to proper operation of the Full Open Switch. With the DRBIII® in Inputs/Outputs, read the FULL OPEN SWITCH state. Manually operate the liftgate while monitoring the DRBIII®. Does the switch status change smoothly as the liftgate is pulled down from the full open position. Yes → Go To 3 No → Refer to Service information for the related symptom(S). Perform BODY VERIFICATION TEST - VER 1.	All

INCOMPLETE POWER OPEN - FULL OPEN SWITCH FAILURE/NON ENGAGEMENT — Continued

TEST	ACTION	APPLICABILITY
3	Remove the left rear trim panel to gain access to the Power Liftgate Drive Unit. With the DRBIII® in Inputs/Outputs, read the FULL OPEN SWITCH state. Open the liftgate to mid position. While monitoring the DRBIII®, wiggle the wiring harness from the Power Liftgate Module to the Full Open Switch on the Power Liftgate Motor assembly. Did the switch status ever change? Yes → Repair the Full Open Switch Sense circuit for a short to ground. Perform BODY VERIFICATION TEST - VER 1. No → Go To 4	All
4	If there are no possible causes remaining, view repair. Repair Replace the Power Liftgate Motor assembly. Perform BODY VERIFICATION TEST - VER 1.	All

Symptom:

INCOMPLETE POWER OPEN - EXCESSIVE H.E. COUNTS/NON ENGAGEMENT

When Monitored and Set Condition:

INCOMPLETE POWER OPEN - EXCESSIVE H.E. COUNTS/NON ENGAGEMENT

When Monitored: During Power Liftgate opening cycle.

Set Condition: If the PLG Module detects that the Power Liftgate Motor has generated more than 700 hall effect pulses during a full power cycle, this code will set.

POSSIBLE CAUSES
DTC PRESENT
POWER LIFTGATE MODULE - HALL EFFECT OPEN
BINDING LIFTGATE
LIFTGATE GEAR ENGAGE DRIVER WIRE OPEN
LIFTGATE GEAR ENGAGE DRIVER WIRE SHORT TO GROUND
LIFTGATE GEAR ENGAGE DRIVER WIRE SHORT TO THE LIFTGATE GEAR DISENGAGE WIRE.
LIFTGATE GEAR DISENGAGE DRIVER WIRE OPEN
LIFTGATE GEAR DISENGAGE DRIVER WIRE SHORT TO GROUND
POWER LIFTGATE MODULE - GEAR ENGAGE CIRCUIT OPEN
POWER LIFTGATE MOTOR
POWER LIFTGATE MOTOR - GEAR ENGAGE OPEN
POWER LIFTGATE MOTOR - GEAR ENGAGE SHORT TO GROUND
POWER LIFTGATE MOTOR - GEAR ENGAGE SHORTED

TEST	ACTION	APPLICABILITY
1	With the DRBIII®, record and erase DTC's. Turn the ignition off, wait 10 seconds, then turn the ignition on. Operate the Power Liftgate several times from stop to stop if possible. With the DRBIII®, read ACTIVE DTCs. Does the DRBIII® display INCOMPLETE POWER OPEN - EXCESSIVE H.E. COUNTS/NON ENGAGEMENT? Yes → Go To 2 No → Using the wiring diagram/schematic as a guide, inspect the wiring and connectors for an intermittent condition. Operate the liftgate several times and check for any binding conditions. Perform BODY VERIFICATION TEST - VER 1.	All

INCOMPLETE POWER OPEN - EXCESSIVE H.E. COUNTS/NON ENGAGEMENT — Continued

TEST	ACTION	APPLICABILITY
2	Examine the liftgate for proper alignment, worn or binding hinges, weak liftgate prop assembly, loose/ hard weatherstrip, and gear teeth on the Power Liftgate Motor assembly for wear or anything that would cause an obstruction to proper operation. If necessary manually operate the power liftgate on a known good vehicle and notice the effort needed to open and close for comparison. Especially notice the effort needed to unlatch and close the liftgate. Were there any mechanical problems found? Yes → Refer to Service information for the related symptom(s). Perform BODY VERIFICATION TEST - VER 1. No → Go To 3	All
3	Operate the liftgate from the full closed position and put an obstacle in it's path to make it reverse. Did the door reverse back to the closed position? Yes → Go To 4 No → Replace the Power Liftgate Module. Perform BODY VERIFICATION TEST - VER 1.	All
4	Disconnect the Power Liftgate Module C2 connector. Measure the resistance between the Liftgate Gear Engage Driver circuit and the Liftgate Gear Disengage Driver circuit in the PLG Module connector. Select the resistance found. Below 5.0 ohms. Go To 5 Between 5.1 and 8.0 ohms. Go To 7 Above 8.1 ohms Go To 12	All
5	Disconnect the Power Liftgate Motor connector. Disconnect the Power Liftgate Control Module C2 connector. Measure the resistance between the Liftgate Gear Engage Driver circuit and the Liftgate Gear Disengage Driver circuit in the PLG Module connector. Is the resistance below 10000.0 ohms? Yes → Repair the Liftgate Gear Engage Driver wire for a short to the Liftgate Gear Disengage Driver wire. Perform BODY VERIFICATION TEST - VER 1. No → Go To 6	All
6	If there are no possible causes remaining, view repair. Repair Replace the Power Liftgate Motor Assembly. Perform BODY VERIFICATION TEST - VER 1.	All
7	Disconnect the Power Liftgate Module C2 connector. Measure the resistance between Ground and the Liftgate Gear Engage Driver circuit. Is the resistance below 10000.0 ohms? Yes → Go To 8 No → Go To 11	All

INCOMPLETE POWER OPEN - EXCESSIVE H.E. COUNTS/NON ENGAGEMENT — Continued

TEST	ACTION	APPLICABILITY
8	Disconnect the Power Liftgate Motor connector. Disconnect the Power Liftgate Module C2 connector. Measure the resistance between ground and the Liftgate Gear Engage Driver circuit. Is the resistance below 10000.0 ohms? Yes → Repair the Liftgate Gear Engage Driver wire for a short to ground. Perform BODY VERIFICATION TEST - VER 1. No → Go To 9	All
9	Disconnect the Power Liftgate Motor connector. Disconnect the Power Liftgate Module C2 connector. Measure the resistance between ground and the Liftgate Gear Disengage Driver circuit. Is the resistance below 10000.0 ohms? Yes → Repair the Liftgate Gear Disengage Driver wire for a short to ground. Perform BODY VERIFICATION TEST - VER 1. No → Go To 10	All
10	If there are no possible causes remaining, view repair. Repair Replace the Power Liftgate Motor Assembly. Perform BODY VERIFICATION TEST - VER 1.	All
11	**NOTE: Ensure all connectors are connected before proceeding.** While back probing, measure the Voltage between the Liftgate Gear Engage Driver circuit and the Liftgate Gear Disengage Driver circuit at the PLG Module connector.. Operate the Power liftgate and observe the voltmeter Did the voltmeter read above 11.0 volts for at least 1 second while the liftgate was operating? Yes → Replace the Power Liftgate Motor assembly. Perform BODY VERIFICATION TEST - VER 1. No → Replace the Power Liftgate Module. Perform BODY VERIFICATION TEST - VER 1.	All
12	Disconnect the Power Liftgate Motor connector. Disconnect the Power Liftgate Module C2 connector. Measure the resistance of the Liftgate Gear Engage Driver circuit between the Power Liftgate Motor connector and the Power Liftgate Module C2 connector. Is the resistance below 5.0 ohms? Yes → Go To 13 No → Repair the Liftgate Gear Engage Driver wire for an open. Perform BODY VERIFICATION TEST - VER 1.	All
13	Disconnect the Power Liftgate Motor connector. Disconnect the Power Liftgate Module C2 connector. Measure the resistance of Liftgate Gear Disengage Driver circuit from the Motor connector to the PLG Module connector. Is the resistance below 5.0 ohms? Yes → Go To 14 No → Repair the Liftgate Gear Disengage Driver wire for an open. Perform BODY VERIFICATION TEST - VER 1.	All

INCOMPLETE POWER OPEN - EXCESSIVE H.E. COUNTS/NON ENGAGEMENT — Continued

TEST	ACTION	APPLICABILITY
14	If there are no possible causes remaining, view repair. Repair Replace the Power Liftgate Motor Assembly. Perform BODY VERIFICATION TEST - VER 1.	All

Symptom:

INCOMPLETE POWER OPEN - HALL EFFECT SIGNAL MISSING

When Monitored and Set Condition:

INCOMPLETE POWER OPEN - HALL EFFECT SIGNAL MISSING

When Monitored: Whenever the power liftgate is performing a power open operation.

Set Condition: The PLG Module detects that the motor is rotating (monitors hall effect pulses) but no hall effect pulses are being detected. This code is set during the power open (2 second chime period, prior to liftgate movement) operation.

POSSIBLE CAUSES
DTC PRESENT
POWER LIFTGATE MODULE - HALL EFFECT OPEN
BINDING LIFTGATE
HALL EFFECT GROUND CIRCUIT OPEN
LIFTGATE HALL EFFECT SUPPLY WIRE OPEN
LIFTGATE HALL EFFECT SUPPLY WIRE SHORT TO GROUND
LIFTGATE HALL EFFECT SUPPLY WIRE SHORT TO HARNESS GROUND
LIFTGATE HALL EFFECT SIGNAL WIRE OPEN
LIFTGATE HALL EFFECT SIGNAL WIRE SHORT TO GROUND
LIFTGATE HALL EFFECT SIGNAL WIRE SHORT TO HARNESS GROUND
POWER LIFTGATE MOTOR

TEST	ACTION	APPLICABILITY
1	With the DRBIII®, record and erase DTC's. Turn the ignition off, wait 10 seconds, then turn the ignition on. Operate the Power Liftgate several times from stop to stop if possible. With the DRBIII®, read ACTIVE DTCs. Does the DRBIII® display INCOMPLETE POWER OPEN - HALL EFFECT SIGNAL MISSING? Yes → Go To 2 No → Using the wiring diagram/schematic as a guide, inspect the wiring and connectors for an intermittent condition. Operate the liftgate several times and check for any binding conditions. Perform BODY VERIFICATION TEST - VER 1.	All

INCOMPLETE POWER OPEN - HALL EFFECT SIGNAL MISSING — Continued

TEST	ACTION	APPLICABILITY
2	Examine the liftgate for proper alignment, worn or binding hinges, weak liftgate prop assembly, loose/ hard weatherstrip, and gear teeth on the Power Liftgate Motor assembly for wear or anything that would cause an obstruction to proper operation. If necessary manually operate the power liftgate on a known good vehicle and notice the effort needed to open and close for comparison. Especially notice the effort needed to unlatch and close the liftgate. Were there any mechanical problems found? Yes → Refer to Service information for the related symptom(s). Perform BODY VERIFICATION TEST - VER 1. No → Go To 3	All
3	Operate the liftgate from the full closed position and put an obstacle in it's path to make it reverse. Did the door reverse back to the closed position? Yes → Go To 4 No → Replace the Power Liftgate Module. Perform BODY VERIFICATION TEST - VER 1.	All
4	Disconnect the Power Liftgate Motor connector. Using a 12-volt test light connected to 12-volts, check the Ground circuit. Does the test light illuminate brightly? Yes → Go To 5 No → Repair the hall effect ground circuit for an open. Perform BODY VERIFICATION TEST - VER 1.	All
5	Disconnect the Power Liftgate Motor connector. Disconnect the Power Liftgate Module C2 connector. Measure the resistance of the Liftgate Hall Effect Supply circuit between the Power Liftgate Motor connector and the Power Liftgate Module C2 connector. Is the resistance below 5.0 ohms? Yes → Go To 6 No → Repair the Liftgate Hall Effect Supply wire for an open. Perform BODY VERIFICATION TEST - VER 1.	All
6	Disconnect the Power Liftgate Motor connector. Disconnect the Power Liftgate Module C2 connector. Measure the resistance between ground and the Liftgate Hall Effect Supply circuit. Is the resistance below 100.0 ohms? Yes → Repair the Door Motor Hall Effect Supply wire for a short to ground. Perform BODY VERIFICATION TEST - VER 1. No → Go To 7	All

INCOMPLETE POWER OPEN - HALL EFFECT SIGNAL MISSING — Continued

TEST	ACTION	APPLICABILITY
7	Disconnect the Power Liftgate Motor connector. Disconnect the Power Liftgate Module C2 connector. Measure the resistance between the Ground circuit (cavity 20) and the Liftgate Hall Effect Supply circuit. Is the resistance below 1000.0 ohms? Yes → Repair the Door Motor Hall Effect Supply wire for a short to the Ground circuit. Perform BODY VERIFICATION TEST - VER 1. No → Go To 8	All
8	Disconnect the Power Liftgate Motor connector. Disconnect the Power Liftgate Module C2 connector. Measure the resistance of the Power Liftgate Hall Effect Signal circuit between the Power Liftgate Motor connector and the Power Liftgate Module C2 connector. Is the resistance below 5.0 ohms? Yes → Go To 9 No → Repair the Liftgate Hall Effect Signal wire for an open. Perform BODY VERIFICATION TEST - VER 1.	All
9	Disconnect the Power Liftgate Motor connector. Disconnect the Power Liftgate Control Module C2 connector. Measure the resistance between ground and the Liftgate Hall Effect Signal circuit. Is the resistance below 100.0 ohms? Yes → Repair the Liftgate Hall Effect Signal wire for a short to ground. Perform BODY VERIFICATION TEST - VER 1. No → Go To 10	All
10	Disconnect the Power Liftgate Motor connector. Disconnect the Power Liftgate Control Module C2 connector. Measure the resistance between the Ground circuit (cavity 20) and the Liftgate Hall Effect Signal circuit. Is the resistance below 1000.0 ohms? Yes → Repair the Liftgate Hall Effect Signal wire for a short to the Ground circuit. Perform BODY VERIFICATION TEST - VER 1. No → Go To 11	All
11	If there are no possible causes remaining, view repair. Repair Replace the Power Liftgate Motor assembly (hall effect sensor). Perform BODY VERIFICATION TEST - VER 1.	All

Symptom:

INCOMPLETE POWER OPEN - OVERCURRENT

When Monitored and Set Condition:

INCOMPLETE POWER OPEN - OVERCURRENT

When Monitored: Anytime the Power Liftgate is in a power open operation.

Set Condition: The drive motor stall current of over 24 amps has been detected for over 500 ms. or during the initial gear engagement the drive transistor is shorted, during a power opening operation.

POSSIBLE CAUSES
DTC PRESENT
BINDING LIFTGATE
GROUND CIRCUIT OPEN
LIFTGATE LATCH CINCH DRIVER CIRCUIT SHORT TO GROUND
LIFTGATE LATCH CINCH DRIVER CIRCUIT SHORT TO HARNESS GROUND
LIFTGATE GEAR ENGAGE DRIVER CIRCUIT SHORT TO GROUND
LIFTGATE OPEN DRIVER CIRCUIT SHORT TO GROUND
LIFTGATE GEAR ENGAGE DRIVER CIRCUIT SHORT TO HARNESS GROUND
LIFTGATE MODULE
POWER LIFTGATE MOTOR

TEST	ACTION	APPLICABILITY
1	With the DRBIII®, record and erase DTC's. Turn the ignition off, wait 10 seconds, then turn the ignition on. Operate the power liftgate several times if possible. With the DRBIII®, read DTCs. Does the DRBIII® display INCOMPLETE POWER OPEN - OVERCURRENT? Yes → Go To 2 No → Using the wiring diagram/schematic as a guide, inspect the wiring and connectors for an intermittent condition. Operate the liftgate several times and check for any binding conditions. Perform BODY VERIFICATION TEST - VER 1.	All

INCOMPLETE POWER OPEN - OVERCURRENT — Continued

TEST	ACTION	APPLICABILITY
2	Examine the liftgate for proper alignment, worn or binding hinges, weak liftgate prop assembly, loose/ hard weatherstrip, and gear teeth on the Power Liftgate Motor assembly for wear or anything that would cause an obstruction to proper operation. If necessary manually operate the liftgate of a known good vehicle and notice the effort needed. Compare the effort needed on the disabled vehicle. Were there any mechanical problems found? Yes → Refer to Service information for the related symptom(s). Perform BODY VERIFICATION TEST - VER 1. No → Go To 3	All
3	Turn the ignition off. Disconnect the Power Liftgate Control Module C1 connector. Using a 12-volt test light connected to 12-volts, check the Ground circuit. Wiggle the harness and check for an intermittent open condition. Does the test light illuminate brightly? Yes → Go To 4 No → Repair the Ground circuit for an open. Perform BODY VERIFICATION TEST - VER 1.	All
4	Turn the ignition off. Disconnect the Power Liftgate Module C2 connector. Measure the resistance between ground and the Liftgate Latch Cinch Driver circuit. Wiggle the harness and check for an intermittent shorted condition. Is the resistance below 100.0 ohms? Yes → Repair the Liftgate Latch Cinch Driver circuit for a short to ground. Perform BODY VERIFICATION TEST - VER 1. No → Go To 5	All
5	Turn the ignition off. Disconnect the Power Liftgate Module C2 connector. Measure the resistance between the Ground circuit and the Liftgate Latch Cinch Driver circuit. Wiggle the harness and check for an intermittent shorted condition. Is the resistance below 100.0 ohms? Yes → Repair the Liftgate Latch Cinch Driver circuit for a short to the Ground circuit. Perform BODY VERIFICATION TEST - VER 1. No → Go To 6	All
6	Turn the ignition off. Disconnect the Power Liftgate Module C2 connector. Measure the resistance between ground and the Liftgate Gear Engage Driver circuit. Wiggle the harness and check for an intermittent short to ground condition. Is the resistance below 100.0 ohms? Yes → Repair the Liftgate Gear Engage Driver circuit for a short to ground. Perform BODY VERIFICATION TEST - VER 1. No → Go To 7	All

INCOMPLETE POWER OPEN - OVERCURRENT — Continued

TEST	ACTION	APPLICABILITY
7	Turn the ignition off. Disconnect the Power Liftgate Module C1 connector. Measure the resistance between ground and the Liftgate Open Driver circuit. Wiggle the harness and check for an intermittent short circuit condition. Is the resistance below 1000.0 ohms? Yes → Repair the Liftgate Open Driver circuit for a short to ground. Perform BODY VERIFICATION TEST - VER 1. No → Go To 8	All
8	Turn the ignition off. Disconnect the Power Liftgate Module C2 connector. Measure the resistance between the Ground circuit and the Liftgate Gear Engage Driver circuit. Wiggle the harness and check for an intermittent short to ground condition. Is the resistance below 100.0 ohms? Yes → Repair the Liftgate Gear Engage Driver circuit for a short to the Ground circuit. Perform BODY VERIFICATION TEST - VER 1. No → Go To 9	All
9	Ensure all connections to the module and liftgate motor are connected at this time. Operate the Power Liftgate in both directions if possible. Does the motor start to lift the liftgate but is very slow and labors extensively? Yes → Replace the Power Liftgate Motor assembly. Perform BODY VERIFICATION TEST - VER 1. No → Replace the Power Liftgate Module Perform BODY VERIFICATION TEST - VER 1.	All

Symptom:
INCOMPLETE POWER OPEN - TRANSISTOR SHORTED

When Monitored and Set Condition:

INCOMPLETE POWER OPEN - TRANSISTOR SHORTED

When Monitored: Whenever the power liftgate is performing a power open operation.

Set Condition: The Power Liftgate Module detects that the motor is rotating (monitors hall effect pulses) even though the controlled PWM rate is 0 percent. This DTC is set during the power open (2 second chime period, prior to movement of the liftgate) operation.

POSSIBLE CAUSES
DTC PRESENT
LIFTGATE OPEN DRIVER WIRE SHORT TO GROUND
POWER LIFTGATE MODULE SHORT TO GROUND
LIFTGATE CLOSE DRIVER WIRE SHORT TO GROUND
POWER LIFTGATE MOTOR

TEST	ACTION	APPLICABILITY
1	With the DRBIII®, record and erase DTC's. Turn the ignition off, wait 10 seconds, then turn the ignition on. Operate the power liftgate several times if possible. With the DRBIII®, read ACTIVE DTCs. Does the DRBIII® display INCOMPLETE POWER OPEN - TRANSISTOR SHORTED? Yes → Go To 2 No → Using the wiring diagram/schematic as a guide, inspect the wiring and connectors for an intermittent condition. Operate the liftgate several times and check for any binding conditions. Perform BODY VERIFICATION TEST - VER 1.	All
2	Turn the ignition off. Disconnect the Power Liftgate Module C1 harness connector. Measure the resistance between ground and the Liftgate Open Driver circuit. Is the resistance below 1000.0 ohms? Yes → Replace the Power Liftgate Module. Perform BODY VERIFICATION TEST - VER 1. No → Go To 3	All

INCOMPLETE POWER OPEN - TRANSISTOR SHORTED — Continued

TEST	ACTION	APPLICABILITY
3	Turn the ignition off. Disconnect the Power Liftgate Module C1 harness connector. Disconnect the Power Liftgate Motor connector. Measure the resistance between ground and the Liftgate Open Driver circuit. Is the resistance below 1000.0 ohms? Yes → Repair the Liftgate Open Driver wire for a short to ground. Perform BODY VERIFICATION TEST - VER 1. No → Go To 4	All
4	Turn the ignition off. Disconnect the Power Liftgate Module C1 harness connector. Disconnect the Power Liftgate Motor connector. Measure the resistance between ground and the Liftgate Close Driver circuit. Is the resistance below 1000.0 ohms? Yes → Repair the Liftgate Close Driver wire for a short to ground. Perform BODY VERIFICATION TEST - VER 1. No → Replace the Power Liftgate Motor. Perform BODY VERIFICATION TEST - VER 1.	All

Symptom:

INCOMPLETE POWER OPEN - VOLTAGE BELOW MINIMUM LEVEL

When Monitored and Set Condition:

INCOMPLETE POWER OPEN - VOLTAGE BELOW MINIMUM LEVEL

When Monitored: Whenever the power liftgate is performing a power open operation.

Set Condition: The PLG Module detects that the voltage is below 9.5 volts during the power open operation.

POSSIBLE CAUSES
DTC PRESENT
MODULE VOLTAGE LOW
BINDING LIFTGATE
DRB OPERATING VOLTAGE LOW
PLG MODULE - HIGH RESISTANCE
POWER LIFTGATE MOTOR

TEST	ACTION	APPLICABILITY
1	With the DRBIII®, record and erase DTC's. Turn the ignition off, wait 10 seconds, then turn the ignition on. Operate the power liftgate several times if possible. With the DRBIII®, read DTCs. Does the DRBIII® display INCOMPLETE POWER OPEN - VOLTAGE BELOW MINIMUM LEVEL? Yes → Go To 2 No → Using the wiring diagram/schematic as a guide, inspect the wiring and connectors for an intermittent condition. Operate the door several times and check for any binding conditions. Perform BODY VERIFICATION TEST - VER 1.	All
2	Examine the liftgate for proper fit and alignment, or anything that would cause an obstruction to proper operation. Check the prop rods to ensure liftgate will self rise from approximately 1/4 open position. Does it take more effort to operate the liftgate than it should? Yes → Refer to Service information for the related symptom(s). Perform BODY VERIFICATION TEST - VER 1. No → Go To 3	All

INCOMPLETE POWER OPEN - VOLTAGE BELOW MINIMUM LEVEL — Continued

TEST	ACTION	APPLICABILITY
3	**NOTE: Test the battery to ensure it is fully charged and in good condition before proceeding.** Turn the ignition off. Turn all lights and accessories off. With the DRBIII® in ″Power Liftgate″ ″Monitor Display″ ″PCI Bus Info″ read the ″Battery Voltage″ and compare it to the ″PLG Bat Volts Input″. **NOTE: If the difference is greater than 0.5 volts, backprobe the Fused B(+) at the module to verify.** Does the voltage vary more than 0.5 volts? Yes → Using the wiring diagram/schematic as a guide, inspect the wiring and connectors. Locate and repair the reason for the voltage drop. Perform BODY VERIFICATION TEST - VER 1. No → Go To 4	All
4	Turn the ignition off. Turn all lights and accessories off. With the DRBIII® in ″Power Liftgate″″ ″Monitor Display″ ″PCI Bus Info″ read the BATTERY VOLTAGE and compare it to the MODULE VOLTAGE. Operate the power liftgate and observe the voltage difference. **NOTE: If the difference is greater than 1.6 volts, backprobe the Fused B(+) at the module to verify.** Does the voltage vary more than 1.6 volts when the liftgate is operating?? Yes → Using the wiring diagram/schematic as a guide, inspect the wiring and connectors. Locate and repair the reason for the voltage drop. Perform BODY VERIFICATION TEST - VER 1. No → Go To 5	All
5	Turn the ignition off. Turn all lights and accessories off. Open the Liftgate. Remove the left rear trim panel to gain access to the Power Liftgate Module. Remove the PLG module but leave it connected. Backprobe voltmeter leads between the Fused B(+) and the Liftgate Open Driver circuits in the PLG C1 connector. Close the Liftgate. Operate the power liftgate in the OPEN position and observe the voltage difference. Does the voltage vary more than 1.0 volts when the liftgate is operating?? Yes → Replace the Power Liftgate Module. Perform BODY VERIFICATION TEST - VER 1. No → Go To 6	All
6	If there are no possible causes remaining, view repair. Repair Check the wiring and connections from the module to the motor for high resistance. If the wiring is okay, replace the Power Liftgate Motor assembly. Perform BODY VERIFICATION TEST - VER 1.	All

Symptom:

IOD WAKE UP OPEN - PLG - BCM

When Monitored and Set Condition:

IOD WAKE UP OPEN - PLG - BCM

When Monitored: Anytime the Body Control Module is awake.

Set Condition: If the BCM does not sense a signal circuit from the Liftgate Module this code will set.

POSSIBLE CAUSES
DTC PRESENT
BODY CONTROL MODULE - IOD WAKE UP OPEN
LIFTGATE MODULE WAKE UP SIGNAL WIRE OPEN
LIFTGATE MODULE WAKE UP SIGNAL WIRE SHORT TO GROUND
POWER LIFTGATE MODULE

TEST	ACTION	APPLICABILITY
1	With the DRBIII®, record and erase DTC's. Turn the ignition off, wait 10 seconds, then turn the ignition on. Wait 10 seconds. With the DRBIII®, read DTCs. Does the DRBIII® display IOD WAKE UP OPEN? Yes → Go To 2 No → Using the wiring diagram/schematic as a guide, inspect the wiring and connectors for an intermittent condition. Perform BODY VERIFICATION TEST - VER 1.	All
2	Disconnect the BCM C2 connector. Measure the voltage between the Liftgate Module Wake Up Signal circuit and ground. Is the voltage above 10.0 volts? Yes → Replace the Body Control Module. Perform BODY VERIFICATION TEST - VER 1. No → Go To 3	All
3	Disconnect the Body Control Module C2 connector. Disconnect the Power Liftgate Module C2 connector. Measure the resistance of the Liftgate Module Wake Up Signal circuit between the BCM C2 connector and the Power Liftgate Module C2 connector. Is the resistance below 5.0 ohms? Yes → Go To 4 No → Repair the Liftgate Module Wake Up Signal wire for an open. Perform BODY VERIFICATION TEST - VER 1.	All

IOD WAKE UP OPEN - PLG - BCM — Continued

TEST	ACTION	APPLICABILITY
4	Disconnect the Body Control Module C2 connector. Disconnect the Power Liftgate Module C2 connector. Measure the resistance between the Liftgate Module Wake Up Signal circuit and ground. Is the resistance below 100.0 ohms? Yes → Repair the Liftgate Module Wake Up Signal wire for a short to ground. Perform BODY VERIFICATION TEST - VER 1. No → Go To 5	All
5	If there are no possible causes remaining, view repair. Repair Replace the Power Liftgate Module. Perform BODY VERIFICATION TEST - VER 1.	All

Symptom:

LOOPBACK TEST FAILURE

When Monitored and Set Condition:

LOOPBACK TEST FAILURE

When Monitored: Anytime the Power Liftgate Module is awake.

Set Condition: The Power Liftgate Module did not receive its own transmitted message on the PCI bus back (loopback) for longer than 1 second.

POSSIBLE CAUSES
DTC PRESENT
POWER LIFTGATE MODULE

TEST	ACTION	APPLICABILITY
1	With the DRBIII®, record and erase DTC's. Turn the ignition off, wait 10 seconds, then turn the ignition on. Operate the power liftgate several times from stop to stop if possible. With the DRBIII®, read ACTIVE DTCs. Does the DRBIII® display LOOPBACK TEST FAILURE? Yes → Replace the Power Liftgate Module. Perform BODY VERIFICATION TEST - VER 1. No → Using the wiring diagram/schematic as a guide, inspect the wiring and connectors for an intermittent condition. Operate the door several times and check for any binding conditions. Perform BODY VERIFICATION TEST - VER 1.	All

Symptom:

LOSS OF BCM MESSAGES

When Monitored and Set Condition:

LOSS OF BCM MESSAGES

When Monitored: Whenever the ignition is on.

Set Condition: If the PLG Module losses communication with the BCM for over 5 seconds, this code will set.

POSSIBLE CAUSES
ATTEMPT TO COMMUNICATE WITH THE BODY CONTROL MODULE
POWER LIFTGATE MODULE - LOSS OF BCM MESSAGES

TEST	ACTION	APPLICABILITY
1	Turn the ignition on. With the DRBIII®, enter ″Body″ then ″Body Computer″. Was the DRBIII® able to I/D or communicate with the BCM? Yes → Go To 2 No → Refer to the Communication category for the related symptom(s).	All
2	With the DRBIII®, erase DTC's. Cycle the ignition switch from off to on and wait approximately 1 minute. With the DRBIII®, read DTC's. Did this DTC reset? Yes → Replace the Power Liftgate Module. Perform BODY VERIFICATION TEST - VER 1. No → Test Complete.	All

Symptom:

LOSS OF EATX MESSAGES

When Monitored and Set Condition:

LOSS OF EATX MESSAGES

When Monitored: Whenever the ignition is in the UNLOCK or RUN position.

Set Condition: If the PLG Module does not receive a PRNDL message for over 5 seconds, this code will set.

POSSIBLE CAUSES
ATTEMPT TO COMMUNICATE WITH THE TRANSMISSION CONTROL MODULE
POWER LIFTGATE MODULE - LOSS OF EATX MESSAGES

TEST	ACTION	APPLICABILITY
1	Turn the ignition on. With the DRBIII® select Transmission. Was the DRBIII® able to I/D or communicate with the Transmission? Yes → Go To 2 No → Refer to the Communication category for the related symptom(S).	All
2	With the DRBIII®, erase DTC's. Cycle the ignition switch from off to on and wait approximately 1 minute. With the DRBIII®, read DTC's. Did this DTC reset? Yes → Replace the Power Liftgate Module. Perform BODY VERIFICATION TEST - VER 1. No → Test Complete.	All

Symptom:

LOSS OF SBEC MESSAGES

When Monitored and Set Condition:

LOSS OF SBEC MESSAGES

When Monitored: Whenever the ignition is in the RUN position.

Set Condition: If the PLG Module does not receive a speed message from the Powertrain Control Module for over 5 seconds, this code will set.

POSSIBLE CAUSES
ATTEMPT TO COMMUNICATE WITH THE POWERTRAIN CONTROL MODULE
POWER LIFTGATE MODULE - LOSS OF SBEC MESSAGES

TEST	ACTION	APPLICABILITY
1	Turn the ignition on. With the DRBIII®, select Engine. Was the DRBIII® able to I/D or communicate with the Powertrain Control Module? Yes → Go To 2 No → Refer to the Communication category for the related symptom(S).	All
2	With the DRBIII®, erase DTC's. Cycle the ignition switch from off to on and wait approximately 1 minute. With the DRBIII®, read DTC's. Did this DTC reset? Yes → Replace the Power Liftgate Module. Perform BODY VERIFICATION TEST - VER 1. No → Test Complete.	All

Symptom:

OUTSIDE LIFTGATE HANDLE INPUT SHORT - BCM

When Monitored and Set Condition:

OUTSIDE LIFTGATE HANDLE INPUT SHORT - BCM

When Monitored: Whenever the Body Control Module is awake.

Set Condition: When the BCM senses a voltage of less than 1.0 volts on the Liftgate Handle Switch Sense circuit for longer than 10 seconds this code will set.

POSSIBLE CAUSES
LIFTGATE HANDLE SWITCH SHORTED
LIFTGATE HANDLE SWITCH SENSE CIRCUIT SHORT TO GROUND
BODY CONTROL MODULE - LIFTGATE HANDLE SWITCH SHORT TO GROUND

TEST	ACTION	APPLICABILITY
1	Disconnect the License Lamp connector (light bar). With the DRBIII®, read DTC's. Does the DRBIII® display Outside Liftgate Handle Input Short? Yes → Go To 2 No → Replace the Liftgate Handle Switch. Perform BODY VERIFICATION TEST - VER 1.	All
2	Disconnect the License Lamp connector. Disconnect the Body Control Module C2 connector. Measure the resistance between ground and the Liftgate Handle Switch Sense circuit. Is the resistance below 1000.0 ohms? Yes → Repair the Liftgate Handle Switch Sense circuit for a short to ground. Perform BODY VERIFICATION TEST - VER 1. No → Go To 3	All
3	If there are no possible causes remaining, view repair. Repair Replace the Body Control Module. Perform BODY VERIFICATION TEST - VER 1.	All

Symptom:

OUTSIDE LIFTGATE HANDLE INPUT STUCK - BCM

When Monitored and Set Condition:

OUTSIDE LIFTGATE HANDLE INPUT STUCK - BCM

When Monitored: Whenever the Body Control Module is awake.

Set Condition: When the BCM senses a liftgate handle input on the Liftgate Handle Switch Sense circuit for longer than 10 seconds this code will set.

POSSIBLE CAUSES
LIFTGATE HANDLE SWITCH STUCK
LIFTGATE HANDLE SWITCH SENSE CIRCUIT SHORT TO GROUND
BODY CONTROL MODULE - LIFTGATE HANDLE SWITCH SHORT TO GROUND

TEST	ACTION	APPLICABILITY
1	Disconnect the License Lamp connector (light bar). With the DRBIII®, erase DTCs. Turn the ignition off, wait 10 seconds, then turn the ignition on. Wait 10 seconds. With the DRBIII®, read DTCs. Does the DRBIII® display Outside Liftgate Handle Input Stuck? Yes → Go To 2 No → Replace the Liftgate Handle Switch. Perform BODY VERIFICATION TEST - VER 1.	All
2	Disconnect the License Lamp connector. Disconnect the Body Control Module C2 connector. Measure the resistance between ground and the Liftgate Handle Switch Sense circuit. Is the resistance below 10000.0 ohms? Yes → Repair the Liftgate Handle Switch Sense circuit for a short to ground. Perform BODY VERIFICATION TEST - VER 1. No → Go To 3	All
3	If there are no possible causes remaining, view repair. Repair Replace the Body Control Module. Perform BODY VERIFICATION TEST - VER 1.	All

Symptom:

OVERHEAD LIFTGATE SWITCH INPUT STUCK - BCM

When Monitored and Set Condition:

OVERHEAD LIFTGATE SWITCH INPUT STUCK - BCM

When Monitored: Whenever the BCM is awake.

Set Condition: When the BCM senses a overhead liftgate switch input for over 10 seconds, this code will set.

POSSIBLE CAUSES
DTC PRESENT
OVERHEAD LIFTGATE SWITCH SHORTED
LIFTGATE SWITCH MUX WIRE SHORT TO GROUND
BODY CONTROL MODULE - OVERHEAD LIFTGATE SWITCH MUX SHORTED

TEST	ACTION	APPLICABILITY
1	With the DRBIII®, record and erase DTC's. Turn the ignition off, wait 10 seconds, then turn the ignition on. Operate the Liftgate from the Overhead Console Switch. With the DRBIII®, read DTCs. Does the DRBIII® display OVERHEAD LIFTGATE SWITCH INPUT STUCK? Yes → Go To 2 No → Using the wiring diagram/schematic as a guide, inspect the wiring and connectors for an intermittent condition. Perform BODY VERIFICATION TEST - VER 1.	All
2	With the DRBIII®, erase DTCs. Disconnect the Overhead Console Switch connector. Turn the ignition off, wait 10 seconds, then turn the ignition on. Wait 10 seconds. With the DRBIII®, read DTCs. Does the DRBIII® display OVERHEAD LIFTGATE SWITCH INPUT STUCK? No → Replace the Power Sliding Door Button Module. Perform BODY VERIFICATION TEST - VER 1. Yes → Go To 3	All
3	Disconnect the Body Control Module C2 connector. Disconnect the Overhead Console Switch connector. Measure the resistance of the Liftgate Switch Mux circuit to ground. Is the resistance below 4000.0 ohms? Yes → Repair the Liftgate Switch Mux wire for a short to ground. Perform BODY VERIFICATION TEST - VER 1. No → Replace the Body Control Module. Perform BODY VERIFICATION TEST - VER 1.	All

Symptom:

OVERHEAD LIFTGATE/LOCKOUT SWITCHES OPEN OR SHT TO VOLTAGE - BCM

When Monitored and Set Condition:

OVERHEAD LIFTGATE/LOCKOUT SWITCHES OPEN OR SHT TO VOLTAGE - BCM

When Monitored: Whenever the BCM is awake.

Set Condition: When the BCM senses a overhead liftgate switch input that is greater than 4.8 volts for over 10 seconds, this code will set.

POSSIBLE CAUSES
DTC PRESENT
SLIDING DOORS OVERHEAD SWITCH MUX CIRCUIT SHORT TO VOLTAGE
LIFTGATE SWITCH MUX WIRE OPEN
BODY CONTROL MODULE - OVERHEAD SWITCH OPEN
OVERHEAD SWITCH OPEN
LIFTGATE SWITCH MUX SHORT TO VOLTAGE
POWER SLIDING DOOR BUTTON MODULE - SHORT TO VOLTAGE

TEST	ACTION	APPLICABILITY
1	With the DRBIII®, record and erase DTC's. Turn the ignition off, wait 10 seconds, then turn the ignition on. Operate the power sliding door from the Overhead Console Switch. With the DRBIII®, read DTCs. Does the DRBIII® display OVERHEAD LIFTGATE/LOCKOUT SWITCHES OPEN OR SHT TO VOLTAGE? Yes → Go To 2 No → Using the wiring diagram/schematic as a guide, inspect the wiring and connectors for an intermittent condition. Perform BODY VERIFICATION TEST - VER 1.	All
2	Disconnect the Body Control Module C3 connector. **NOTE: Check connectors - Clean/repair as necessary.** Measure the voltage of the Sliding Doors Overhead Switch Mux circuit to ground. Is there any voltage present? Yes → Repair the Sliding Doors Overhead Switch Mux circuit for a short to voltage. Perform BODY VERIFICATION TEST - VER 1. No → Go To 3	All

OVERHEAD LIFTGATE/LOCKOUT SWITCHES OPEN OR SHT TO VOLTAGE - BCM — Continued

TEST	ACTION	APPLICABILITY
3	Disconnect the Body Control Module C2 connector. **NOTE: Check connectors - Clean/repair as necessary.** Turn the ignition on. Turn the park lamps on. Measure the voltage between ground and the Liftgate Switch Mux circuit. Is there any voltage present? Yes → Go To 4 No → Go To 5	All
4	Disconnect the Overhead Console connector. Disconnect the Body Control Module C2 connector. **NOTE: Check connectors - Clean/repair as necessary.** Turn the ignition on. Turn the park lamps on. Measure the voltage between Liftgate Switch Mux circuit and ground. Is there any voltage present? Yes → Repair the Liftgate Switch Mux circuit for a short to voltage. Perform BODY VERIFICATION TEST - VER 1. No → Replace the Power Sliding Door Button Module. Perform BODY VERIFICATION TEST - VER 1.	All
5	Disconnect the Body Control Module C2 connector. Measure the resistance between ground and the Liftgate Switch Mux circuit. Is the resistance below 25000.0 ohms? Yes → Go To 6 No → Go To 7	All
6	If there are no possible causes remaining, view repair. Repair Replace the Body Control Module. Perform BODY VERIFICATION TEST - VER 1.	All
7	Disconnect the Body Control Module C2 connector. Disconnect the Overhead Console connector. Measure the resistance of the Liftgate Switch Mux circuit between the BCM connector and the Overhead Console connector. Is the resistance below 5.0 ohms? Yes → Replace the Power Sliding Door Button Module. Perform BODY VERIFICATION TEST - VER 1. No → Repair the Liftgate Switch Mux circuit for an open. Perform BODY VERIFICATION TEST - VER 1.	All

Symptom:
OVERHEAD LIFTGATE/LOCKOUT SWITCHES SHORT - BCM

When Monitored and Set Condition:

OVERHEAD LIFTGATE/LOCKOUT SWITCHES SHORT - BCM

When Monitored: Whenever the BCM is awake.

Set Condition: When the BCM senses a overhead liftgate switch input that drops to below 0.24 volts for over 10 seconds, this code will set.

POSSIBLE CAUSES
DTC PRESENT
OVERHEAD LIFTGATE SWITCH SHORTED
LIFTGATE SWITCH MUX WIRE SHORT TO GROUND
BODY CONTROL MODULE - OVERHEAD LIFTGATE SWITCH MUX SHORTED

TEST	ACTION	APPLICABILITY
1	With the DRBIII®, record and erase DTC's. Turn the ignition off, wait 10 seconds, then turn the ignition on. Operate the Liftgate from the Overhead Console Switch. With the DRBIII®, read DTCs. Does the DRBIII® display OVERHEAD SWITCH #1 SHORT? Yes → Go To 2 No → Using the wiring diagram/schematic as a guide, inspect the wiring and connectors for an intermittent condition. Perform BODY VERIFICATION TEST - VER 1.	All
2	With the DRBIII®, erase DTCs. Disconnect the Overhead Console Switch connector. Turn the ignition off, wait 10 seconds, then turn the ignition on. Wait 10 seconds. With the DRBIII®, read DTCs. Does the DRBIII® display OVERHEAD SWITCH #1 SHORT? No → Replace the Overhead Liftgate Switch.. Perform BODY VERIFICATION TEST - VER 1. Yes → Go To 3	All
3	Disconnect the Body Control Module C2 connector. Disconnect the Overhead Console Switch connector. Measure the resistance of the Liftgate Switch Mux circuit to ground. Is the resistance below 500.0 ohms? Yes → Repair the Liftgate Switch Mux wire for a short to ground. Perform BODY VERIFICATION TEST - VER 1. No → Replace the Body Control Module. Perform BODY VERIFICATION TEST - VER 1.	All

Symptom:

PINCH SENSOR CIRCUIT OPEN

When Monitored and Set Condition:

PINCH SENSOR CIRCUIT OPEN

When Monitored: Whenever the Power Liftgate is operating.

Set Condition: The power liftgate module has detected the pinch sensor circuit voltage is above 4.6 volts.

POSSIBLE CAUSES
DTC PRESENT
POWER LIFTGATE MODULE - PINCH SENSOR OPEN
RIGHT PINCH SENSOR SIGNAL WIRE OPEN
PINCH SENSOR GROUND OPEN
RIGHT PINCH SENSOR OPEN
LEFT PINCH SENSOR OPEN
RIGHT PINCH SENSOR SIGNAL WIRE OPEN

TEST	ACTION	APPLICABILITY
1	With the DRBIII®, record and erase DTC's. Turn the ignition off, wait 10 seconds, then turn the ignition on. Operate the liftgate several times. With the DRBIII®, read DTCs. Does the DRBIII® display PINCH SENSOR CIRCUIT OPEN? Yes → Go To 2 No → Using the wiring diagram/schematic as a guide, inspect the wiring and connectors for an intermittent condition. Perform BODY VERIFICATION TEST - VER 1.	All
2	Disconnect the Power Liftgate Module C2 connector. Measure the resistance of the Pinch Sensor Signal circuit between the Pinch Sensor Signal and the Ground circuit (cavity 20) in the PLGM C2 harness connector. Is the resistance below 22000.0 ohms? No → Go To 3 Yes → Replace the Power Liftgate Module. Perform BODY VERIFICATION TEST - VER 1.	All

PINCH SENSOR CIRCUIT OPEN — Continued

TEST	ACTION	APPLICABILITY
3	Remove the Liftgate trim panel. Disconnect the Liftgate Right Pinch Sensor connector. Disconnect the Liftgate Left Pinch Sensor connector. Measure the resistance of the Right Pinch Sensor Signal circuit between the Liftgate Left Pinch Sensor connector and the Liftgate Right Pinch Sensor connector. Is the resistance below 5.0 ohms? Yes → Go To 4 No → Repair the Right Pinch Sensor Signal wire for an open. Perform BODY VERIFICATION TEST - VER 1.	All
4	Remove the left rear trim panel. Remove the Liftgate trim panel. Disconnect the Liftgate Right Pinch Sensor connector. Disconnect the Power Liftgate Module C2 connector. Measure the resistance of the Ground circuit between the Liftgate Right Pinch Sensor connector and the PLGM C2 harness connector. Is the resistance below 20.0 ohms? Yes → Go To 5 No → Repair the ground circuit for an open. Perform BODY VERIFICATION TEST - VER 1.	All
5	Remove the left rear trim panel. Remove the Liftgate trim panel. Disconnect the Power Liftgate Module C2 connector. Disconnect the Liftgate Right Pinch Sensor connector. Connect a jumper wire between the Right Pinch Sensor Signal circuit and the Ground circuit in the Liftgate Right Pinch Sensor connector. Measure the resistance of the Pinch Sensor Signal circuit between the Pinch Sensor Signal and the Ground circuit (cav 20) in the C2 connector. Is the resistance below 11000.0 ohms? Yes → Replace the Right Pinch Sensor. Perform BODY VERIFICATION TEST - VER 1. No → Go To 6	All
6	Remove the left rear trim panel. Remove the liftgate trim panel. Disconnect the Power Liftgate Module C2 connector. Disconnect the Liftgate Left Pinch Sensor connector. Connect a jumper wire between the Pinch Sensor Signal circuit and the Right Pinch Sensor Signal circuit in the Liftgate Left Pinch Sensor connector. Measure the resistance of the Pinch Sensor Signal circuit between the Pinch Sensor Signal and the Ground circuit (cav 20) in the C2 connector. Is the resistance below 11000.0 ohms? Yes → Replace the Left Pinch Sensor. Perform BODY VERIFICATION TEST - VER 1. No → Go To 7	All

PINCH SENSOR CIRCUIT OPEN — Continued

TEST	ACTION	APPLICABILITY
7	Remove the left rear trim panel. Remove the liftgate trim panel. Disconnect the Power Liftgate Module C2 connector. Disconnect the Liftgate Left Pinch Sensor connector. Measure the resistance of the Pinch Sensor Signal circuit between the PLG C2 connector and the Liftgate Left Pinch Sensor connector. Is the resistance below 5.0 ohms? Yes → Test Complete. No → Repair the Pinch Sensor Signal wire for an open. Perform BODY VERIFICATION TEST - VER 1.	All

Symptom:

PINCH SENSOR SIGNAL CIRCUIT SHORT TO GROUND

When Monitored and Set Condition:

PINCH SENSOR SIGNAL CIRCUIT SHORT TO GROUND

When Monitored: Whenever the Power Liftgate is operating.

Set Condition: The power liftgate module has detected the pinch sensor circuit voltage is shorted to ground.

POSSIBLE CAUSES
DTC PRESENT
PINCH SENSOR SIGNAL CIRCUIT SHORT TO GROUND CIRCUIT
POWER LIFTGATE MODULE - SHORT TO GROUND
RIGHT PINCH SENSOR - SHORT TO GROUND
RIGHT PINCH SENSOR SIGNAL WIRE - SHORT TO GROUND
LEFT PINCH SENSOR - SHORT TO GROUND
RIGHT PINCH SENSOR SIGNAL WIRE SHORT TO GROUND

TEST	ACTION	APPLICABILITY
1	With the DRBIII®, record and erase DTC's. Turn the ignition off, wait 10 seconds, then turn the ignition on. Operate the liftgate several times. With the DRBIII®, read DTCs. Does the DRBIII® display PINCH SENSOR CIRCUIT SHORT TO GROUND? Yes → Go To 2 No → Using the wiring diagram/schematic as a guide, inspect the wiring and connectors for an intermittent condition. Perform BODY VERIFICATION TEST - VER 1.	All
2	Remove the left rear trim panel to gain access to the Power Liftgate module and drive unit. Disconnect the Power Liftgate Module C1 and C2 connectors. Measure the resistance of the Pinch Sensor Signal circuit between the Pinch Sensor Signal and the Ground circuits in the C2 connector. Is the resistance below 20.0 ohms? Yes → Repair the Pinch Sensor Signal circuit for a short to the Ground circuit. Perform BODY VERIFICATION TEST - VER 1. No → Go To 3	All

PINCH SENSOR SIGNAL CIRCUIT SHORT TO GROUND — Continued

TEST	ACTION	APPLICABILITY
3	Disconnect the Power Liftgate Module C2 connector. Ensure the PLGM C1 connector is connected at this time. Measure the resistance between ground and the Pinch Sensor Signal circuit. Is the resistance below 100.0 ohms? Yes → Go To 4 No → Replace the Power Liftgate Module. Perform BODY VERIFICATION TEST - VER 1.	All
4	Remove the Power Liftgate Motor trim panel. Remove the Liftgate trim panel. Disconnect the Power Liftgate Module C2 connector. Disconnect the Right Pinch Sensor connector Measure the resistance between ground and the Pinch Sensor Signal circuit. Is the resistance below 100.0 ohms? Yes → Go To 5 No → Replace the Right Pinch Sensor. Perform BODY VERIFICATION TEST - VER 1.	All
5	Remove the Liftgate trim panel. Disconnect the Right Pinch Sensor connector. Disconnect the Left Pinch Sensor connector. Measure the resistance between ground and the Right Pinch Sensor Signal circuit. Is the resistance below 1000.0 ohms? Yes → Repair the Right Pinch Sensor Signal wire for a short to ground. Perform BODY VERIFICATION TEST - VER 1. No → Go To 6	All
6	Remove the left rear trim panel. Remove the liftgate trim panel. Disconnect the Power Liftgate Module C2 connector. Disconnect the Left Pinch Sensor connector Measure the resistance between ground and the Pinch Sensor Signal circuit. Is the resistance below 100.0 ohms? Yes → Repair the Pinch Sensor Signal wire for a short to ground. Perform BODY VERIFICATION TEST - VER 1. No → Replace the Left Pinch Sensor. Perform BODY VERIFICATION TEST - VER 1.	All

Symptom:
PROP ROD FAILURE

When Monitored and Set Condition:

PROP ROD FAILURE

When Monitored: After a complete power open operation or a failed power close. This DTC may be in combination with the ″Incomplete Power Close - Overcurrent″ DTC.

Set Condition: The Power Liftgate Module has detected the prop rods not holding the liftgate in full open position or the liftgate has dropped after a power open operation.

POSSIBLE CAUSES
TEST PROP RODS
TEST FULL OPEN SWITCH
DTC PRESENT

TEST	ACTION	APPLICABILITY
1	Examine the liftgate for proper alignment or weak liftgate prop rods. Manually operate the liftgate of a known good vehicle and notice the effort needed. Compare the effort needed on the disabled vehicle. Did it take more effort to lift the liftgate on the disabled vehicle than on the known good vehicle? Yes → Replace the prop rods in accordance with the Service Information. Perform BODY VERIFICATION TEST - VER 1. No → Go To 2	All
2	With the DRBIII® in Inputs/Outputs, read the FULL OPEN SWITCH states. Open and close the liftgate manually and observe the Full Open Switch states. Do switch toggle from open to close as the liftgate is opened and closed? No → Replace the Full Open Switch in accordance with service information. Perform BODY VERIFICATION TEST - VER 1. Yes → Check for any other PLG DTC's before proceeding. If there are none, check with the owner to see if this could have set in cold weather only. If so, replace the prop rods. Perform BODY VERIFICATION TEST - VER 1.	All

Symptom:

***POWER LIFTGATE INOPERATIVE**

POSSIBLE CAUSES
DTC'S PRESENT
MODULE RESPONSE
INTERMITTENT PROBLEM
SYSTEM TESTS

TEST	ACTION	APPLICABILITY
1	With the DRBIII® check for response from the Body Computer and the Power Liftgate Modules Is there response from both modules? Yes → Go To 2 No → Refer to symptom list for problems related to COMMUNICATION.	All
2	With the DRBIII®, read DTCs in POWER LIFTGATE and BODY COMPUTER. Are any Power Liftgate related codes present? Yes → Refer to symptom list for problems related to POWER LIFTGATE. No → Go To 3	All
3	This test will determine what inhibited the Power Liftgate from operating properly. With the DRBIII®, select POWER LIFTGATE, MISCELLANEOUS, LAST INHIBIT MONITOR. Does the DRBIII® display any INHIBIT REASONS? Yes → Check for any binding conditions or other restrictions that may prevent proper operation. Using the wiring diagram/schematic as a guide, inspect the wiring and connectors. No → Go To 4	All
4	Ensure Liftgate is fully closed before proceeding. With the DRBIII® select SYSTEM TEST. Perform the Open, Close, Latch Cinch, Latch Release and Relay tests. Did any test fail? Yes → Using the wiring diagram/schematic as a guide, inspect the wiring and connectors. No → Test Complete.	All

Symptom:

AMBIENT TEMPERATURE SENSOR CIRCUIT OPEN

When Monitored and Set Condition:

AMBIENT TEMPERATURE SENSOR CIRCUIT OPEN

When Monitored: Anytime the Power Sliding Door Module is awake.

Set Condition: If the Power Sliding Door Modules internal thermistor becomes open, this code will set.

POSSIBLE CAUSES
DTC PRESENT
POWER SLIDING DOOR MODULE

TEST	ACTION	APPLICABILITY
1	With the DRBIII®, record and erase DTC's. Turn the ignition off, wait 10 seconds, then turn the ignition on. Operate the power sliding door several times from stop to stop if possible. With the DRBIII®, read ACTIVE DTCs. Does the DRBIII® display AMBIENT TEMPERATURE SENSOR CIRCUIT HIGH? Yes → Replace the Power Sliding Door Module. Perform BODY VERIFICATION TEST - VER 1. No → No problem found at this time. Perform BODY VERIFICATION TEST - VER 1.	All

Symptom:

AMBIENT TEMPERATURE SENSOR CIRCUIT SHORT TO GROUND

When Monitored and Set Condition:

AMBIENT TEMPERATURE SENSOR CIRCUIT SHORT TO GROUND

When Monitored: Anytime the Power Sliding Door Module is awake.

Set Condition: If the Power Sliding Door Modules internal thermistor is shorted, this code will set.

POSSIBLE CAUSES
DTC PRESENT
POWER SLIDING DOOR MODULE

TEST	ACTION	APPLICABILITY
1	With the DRBIII®, record and erase DTC's. Turn the ignition off, wait 10 seconds, then turn the ignition on. Operate the power sliding door several times from stop to stop if possible. With the DRBIII®, read ACTIVE DTCs. Does the DRBIII® display AMBIENT TEMPERATURE SENSOR CIRCUIT LOW? Yes → Replace the Power Sliding Door Module. Perform BODY VERIFICATION TEST - VER 1. No → No problem found at this time. Perform BODY VERIFICATION TEST - VER 1.	All

Symptom:
CONTROL MODULE FAILURE - INTERNAL FAILURE

When Monitored and Set Condition:

CONTROL MODULE FAILURE - INTERNAL FAILURE

When Monitored: Anytime the module is awake.

Set Condition: Whenever the module senses an internal failure (EEPROM, ROM, ADC) this code will set. The module must be replaced.

POSSIBLE CAUSES
SLIDING DOOR CONTROL MODULE - INTERNAL FAILURE

TEST	ACTION	APPLICABILITY
1	View repair. Repair Replace the Sliding Control Module. Perform BODY VERIFICATION TEST - VER 1.	All

Symptom:
INCOMPLETE LATCH CINCH - NO PAWL TRANSITION

When Monitored and Set Condition:

INCOMPLETE LATCH CINCH - NO PAWL TRANSITION

When Monitored: Whenever the power sliding door in operating.

Set Condition: The pawl switch was not detected as returning to ground during the transition between secondary and primary cinch operation. NOTE: The door may not be fully cinched during this condition. The door may cinch to primary but not be fully seated and may pop off back to secondary.

POSSIBLE CAUSES
DTC PRESENT
BINDING DOOR
GROUND WIRE OPEN
PAWL SWITCH SENSE WIRE OPEN
PAWL SWITCH SENSE WIRE SHORT TO GROUND
PAWL SWITCH

TEST	ACTION	APPLICABILITY
1	**NOTE: This DTC will only set during the cinching operation after the 4 second time out. This may make it difficult to reproduce.** With the DRBIII®, record and erase DTC's. Turn the ignition off, wait 10 seconds, then turn the ignition on. Operate the power sliding door several times if possible. With the DRBIII®, read ACTIVE DTCs. Does the DRBIII® display INCOMPLETE LATCH CINCH - NO PAWL TRANSITION? Yes → Go To 2 No → Using the wiring diagram/schematic as a guide, inspect the wiring and connectors for an intermittent condition. Operate the door several times and check for any binding or other obstructions. Perform BODY VERIFICATION TEST - VER 1.	All
2	Examine the door for proper fit and alignment, loose/ hard or torn seals, worn teeth on the rack and gear (lower drive unit) or anything that would cause an obstruction to proper operation. Manually operate the other sliding door or of a known good vehicle and notice the effort needed to open and close. Compare the effort needed on the disabled door. Does it take more effort to operate the door than it should? Yes → Refer to Service information for the related symptom(s). Perform BODY VERIFICATION TEST - VER 1. No → Go To 3	All

INCOMPLETE LATCH CINCH - NO PAWL TRANSITION — Continued

TEST	ACTION	APPLICABILITY
3	Disconnect the Sliding Door Control Module C2 connector. Disconnect the Sliding Door Latch Sensing Switch connector (latch assembly). Measure the resistance of the Ground wires (both) between the PSD C2 connector (cavity 20) and the Sliding Door Latch Sensing Switch connector. Wiggle the harness while observing the ohmmeter. Is the resistance below 5.0 ohms on both ground wires? Yes → Go To 4 No → Repair the Ground wire for an open. Perform BODY VERIFICATION TEST - VER 1.	All
4	Disconnect the Sliding Door Control Module C2 connector. Disconnect the Sliding Door Latch Sensing Switch connector (latch assembly). Measure the resistance of the Pawl Switch Sense wire between the PSD C2 connector and the Sliding Door Latch Sensing Switch connector. Wiggle the harness while observing the ohmmeter. Is the resistance below 5.0 ohms? Yes → Go To 5 No → Repair the Pawl Switch Sense wire for an open. Perform BODY VERIFICATION TEST - VER 1.	All
5	Disconnect the Sliding Door Control Module C2 connector. Disconnect the Sliding Door Latch Sensing Switch connector (latch assembly). Measure the resistance between ground and the Pawl Switch Sense circuit. Wiggle the harness while observing the ohmmeter. Is the resistance below 1000.0 ohms? Yes → Repair the Pawl Switch Sense wire for a short to ground. Perform BODY VERIFICATION TEST - VER 1. No → Go To 6	All
6	If there are no possible causes remaining, view repair. Repair Replace the Pawl Switch (latch assembly). Perform BODY VERIFICATION TEST - VER 1.	All

Symptom:
INCOMPLETE LATCH CINCH - OVERCURRENT

When Monitored and Set Condition:

INCOMPLETE LATCH CINCH - OVERCURRENT

When Monitored: Whenever the power sliding door is operating in the closing direction.

Set Condition: The latch motor stall current of 6.2 amps has been detected, with no pawl or ratchet failure. This code is set during the first stage of the power cinching operation.

POSSIBLE CAUSES
DTC PRESENT
BINDING DOOR
CINCH/RELEASE MOTOR LATCH DRIVER WIRE OPEN
CINCH/RELEASE MOTOR UNLATCH DRIVER WIRE OPEN
CINCH/RELEASE MOTOR LATCH DRIVER WIRE SHORT TO GROUND
CINCH/RELEASE MOTOR UNLATCH DRIVER WIRE SHORT TO GROUND
LATCH ASSEMBLY

TEST	ACTION	APPLICABILITY
1	With the DRBIII®, record and erase DTC's. Turn the ignition off, wait 10 seconds, then turn the ignition on. Operate the power sliding door several times if possible. With the DRBIII®, read ACTIVE DTCs. Does the DRBIII® display INCOMPLETE LATCH CINCH-OVERCURRENT? Yes → Go To 2 No → Using the wiring diagram/schematic as a guide, inspect the wiring and connectors for an intermittent condition. Operate the door several times and check for any binding or other obstructions. Perform BODY VERIFICATION TEST - VER 1.	All
2	Examine the door for proper fit and alignment, loose/ hard or torn seals, worn teeth on the rack and gear (lower drive unit) or anything that would cause an obstruction to proper operation. Manually operate the other sliding door or of a known good vehicle and notice the effort needed to open and close. Compare the effort needed on the disabled door. Does it take more effort to operate the door than it should? Yes → Refer to Service information for the related symptom(s). Perform BODY VERIFICATION TEST - VER 1. No → Go To 3	All

INCOMPLETE LATCH CINCH - OVERCURRENT — Continued

TEST	ACTION	APPLICABILITY
3	Turn the ignition off. Disconnect the Sliding Door Control Module C2 connector. Disconnect the Cinch/Release Motor connector. Measure the resistance of the Cinch/Release Motor Latch Driver circuit between the Sliding Door Control Module C2 connector and the Cinch/Release Motor connector. Wiggle the harness and check for an intermittent open condition. Is the resistance below 5.0 ohms? Yes → Go To 4 No → Repair the Cinch/Release Motor Latch Driver wire for an open. Perform BODY VERIFICATION TEST - VER 1.	All
4	Turn the ignition off. Disconnect the Sliding Door Control Module C2 connector. Disconnect the Cinch/Release Motor connector. Measure the resistance of the Cinch/Release Motor Unlatch Driver circuit between the Sliding Door Control Module C2 connector and the Cinch/Release Motor connector. Wiggle the harness and check for an intermittent open condition. Is the resistance below 5.0 ohms? Yes → Go To 5 No → Repair the Cinch/Release Motor Unlatch Driver wire for an open. Perform BODY VERIFICATION TEST - VER 1.	All
5	Turn the ignition off. Disconnect the Sliding Door Control Module C2 connector. Disconnect the Cinch/Release Motor connector. Measure the resistance between ground and the Cinch/Release Motor Latch Driver circuit. Wiggle the harness and check for an intermittent open condition. Is the resistance below 1000.0 ohms? Yes → Go To 6 No → Repair the Cinch/Release Motor Latch Driver wire for a short to ground. Perform BODY VERIFICATION TEST - VER 1.	All
6	Turn the ignition off. Disconnect the Sliding Door Control Module C2 connector. Disconnect the Cinch/Release Motor connector. Measure the resistance between ground and the Cinch/Release Motor Unlatch Driver circuit. Wiggle the harness and check for an intermittent open condition. Is the resistance below 1000.0 ohms? Yes → Go To 7 No → Repair the Cinch/Release Motor Unlatch Driver wire for a short to ground. Perform BODY VERIFICATION TEST - VER 1.	All
7	If there are no possible causes remaining, view repair. Repair Replace the Latch Assembly. Perform BODY VERIFICATION TEST - VER 1.	All

Symptom:

INCOMPLETE LATCH RELEASE - FULL OPEN SWITCH FAILURE

When Monitored and Set Condition:

INCOMPLETE LATCH RELEASE - FULL OPEN SWITCH FAILURE

When Monitored: Whenever the power sliding door is operating in the closing direction.

Set Condition: The release operation had stalled or the current was exceeded before the full open switch had changed state during the release. This code will set only in power closing operation.

POSSIBLE CAUSES
DTC PRESENT
FULL OPEN SWITCH GROUND OPEN
STICKING CABLES OR LATCH
FULL OPEN SWITCH WIRE OPEN
FULL OPEN SWITCH WIRE SHORT TO GROUND
LATCH ASSEMBLY - HOLD OPEN RELEASE
POWER SLIDING DOOR MODULE - FULL OPEN SWITCH
FULL OPEN SW ITCH

TEST	ACTION	APPLICABILITY
1	With the DRBIII®, record and erase DTC's. Turn the ignition off, wait 10 seconds, then turn the ignition on. Operate the power sliding door several times if possible. With the DRBIII®, read ACTIVE DTCs. Does the DRBIII® display INCOMPLETE LATCH RELEASE- FULL OPEN SWITCH FAILURE? Yes → Go To 2 No → Using the wiring diagram/schematic as a guide, inspect the wiring and connectors for an intermittent condition. Operate the door several times and check for any binding cables or other obstructions. Perform BODY VERIFICATION TEST - VER 1.	All

INCOMPLETE LATCH RELEASE - FULL OPEN SWITCH FAILURE — Continued

TEST	ACTION	APPLICABILITY
2	Examine the door for proper fit and alignment, foreign material in the lower drive unit or anything that would cause an obstruction to proper operation of the Full Open Switch. Open the sliding door to the full open position. Hold the door in the full open position and observe the hold open latch in the lower drive unit. Manually operate the door handle (pull and release) while observing the hold open latch. Repeat this step several times while observing the latch. Does the latch work smoothly as the handle is pulled and released? Yes → Go To 3 No → Determine if the problem is a sticking cable or hold open latch (lower drive unit). Refer to Service information for the related symptom(s). Perform BODY VERIFICATION TEST - VER 1.	All
3	Hold the door in the full open position and observe the hold open latch in the lower drive unit. With the DRBIII® in SYSTEM TEST, perform the SLIDING DOOR LATCH RELEASE TEST. Repeat this step several times while observing the latch. Does the latch work smoothly as the latch is activated? Yes → Go To 4 No → Replace the Latch Assembly (hold open release actuator). Perform BODY VERIFICATION TEST - VER 1.	All
4	With the DRBIII® in Inputs/Outputs, read the FULL OPEN SWITCH state. While observing the FULL OPEN switch state, manually move the door from full open to part open. The switch should toggle from CLOSED to OPEN. Did the switch status change as the door was moved from full open to part open? Yes → Replace the Power Sliding Door Module. Perform BODY VERIFICATION TEST - VER 1. No → Go To 5	All
5	Disconnect the Full Open Switch connector. Using a 12-volt test light connected to 12-volts, check the Ground circuit. Does the test light illuminate brightly? Yes → Go To 6 No → Repair the ground wire for an open. Perform BODY VERIFICATION TEST - VER 1.	All
6	Disconnect the Power Sliding Door C2 connector. Disconnect the Full Open Switch connector. Measure the resistance of the Full Open Switch circuit from the Power Sliding Door Module C2 connector to the Full Open Switch connector on the lower drive unit. Is the resistance below 5.0 ohms? Yes → Go To 7 No → Repair the Full Open Switch Sense wire for an open. Perform BODY VERIFICATION TEST - VER 1.	All

INCOMPLETE LATCH RELEASE - FULL OPEN SWITCH FAILURE — Continued

TEST	ACTION	APPLICABILITY
7	Disconnect the Power Sliding Door C2 connector. Disconnect the Full Open Switch connector. Measure the resistance between ground and the Full Open Switch circuit. Is the resistance below 1000.0 ohms? Yes → Repair the Full Open Switch Sense wire for a short to ground. Perform BODY VERIFICATION TEST - VER 1. No → Go To 8	All
8	If there are no possible causes remaining, view repair. Repair Replace the Full Open Switch (Lower Drive Unit). Perform BODY VERIFICATION TEST - VER 1.	All

Symptom:
INCOMPLETE LATCH RELEASE - RATCHET SWITCH FAILURE

When Monitored and Set Condition:

INCOMPLETE LATCH RELEASE - RATCHET SWITCH FAILURE

When Monitored: Whenever the power sliding door is operating in an opening direction.

Set Condition: The pawl switch was grounded but the ratchet switch remained open. This code will set only in the release operation.

POSSIBLE CAUSES
DTC PRESENT
BINDING DOOR
POWER SLIDING DOOR MODULE - RATCHET CIRCUIT
GROUND WIRE OPEN
SLIDING DOOR AJAR SWITCH SENSE WIRE OPEN
RATCHET SWITCH

TEST	ACTION	APPLICABILITY
1	**NOTE: This DTC will only set during the cinching operation after the 4 second time out. This may make it difficult to reproduce** With the DRBIII®, record and erase DTC's. Turn the ignition off, wait 10 seconds, then turn the ignition on. Operate the power sliding door several times if possible. With the DRBIII®, read ACTIVE DTCs. Does the DRBIII® display INCOMPLETE LATCH RELEASE - RATCHET SWITCH FAILURE? Yes → Go To 2 No → Using the wiring diagram/schematic as a guide, inspect the wiring and connectors for an intermittent condition. Operate the door several times and check for any binding or other obstructions. Perform BODY VERIFICATION TEST - VER 1.	All
2	Examine the door for proper fit and alignment, loose/ hard or torn seals, worn teeth on the rack and gear (lower drive unit) or anything that would cause an obstruction to proper operation. Manually operate the other sliding door or of a known good vehicle and notice the effort needed to open and close. Compare the effort needed on the disabled door. Especially notice the effort needed to unlatch and close the door. Does it take more effort to operate the door than it should? Yes → Refer to Service information for the related symptom(s). Perform BODY VERIFICATION TEST - VER 1. No → Go To 3	All

INCOMPLETE LATCH RELEASE - RATCHET SWITCH FAILURE — Continued

TEST	ACTION	APPLICABILITY
3	With the DRBIII® in Inputs/Outputs, read the RATCHET state. Open the sliding door to full open position. Using a screwdriver, click the latch to the second detent while observing the DRB111®. Unlatch the latch by pulling the handle switch and observe the DRB111® for a state change. Repeat this step several times while moving the door in different positions and wiggling the wiring harness to check for an intermittent short. Did the DRB111® show the switch state changes correctly every time? Yes → Replace the Power Sliding Door Module. Perform BODY VERIFICATION TEST - VER 1. No → Go To 4	All
4	Disconnect the Sliding Door Control Module C2 connector. Disconnect the Sliding Door Latch Sensing Switch connector (latch assembly). Measure the resistance of the Ground wires (both) between the PSD C2 connector (cavity 20) and the Sliding Door Latch Sensing Switch connector. Wiggle the harness while observing the ohmmeter. Is the resistance below 5.0 ohms on both ground wires? Yes → Go To 5 No → Repair the Ground wire for an open. Perform BODY VERIFICATION TEST - VER 1.	All
5	Disconnect the Sliding Door Control Module C2 connector. Disconnect the Sliding Door Latch Sensing Switch connector (latch assembly). Measure the resistance of the Sliding Door Ajar Switch Sense wire between the PSD C2 connector and the Sliding Door Latch Sensing Switch connector. Wiggle the harness and move the door in different positions while observing the ohmmeter. Is the resistance below 5.0 ohms? Yes → Go To 6 No → Repair the Sliding Door Ajar Switch Sense wire for an open. Perform BODY VERIFICATION TEST - VER 1.	All
6	If there are no possible causes remaining, view repair. Repair Replace the Ratchet Switch (latch assembly). Perform BODY VERIFICATION TEST - VER 1.	All

Symptom:

INCOMPLETE LATCH RELEASE- NO REVERSE TO UNLOAD CLUTCH

When Monitored and Set Condition:

INCOMPLETE LATCH RELEASE- NO REVERSE TO UNLOAD CLUTCH

When Monitored: Whenever the power sliding door is operating.

Set Condition: If the cinch release motor takes longer than 700 ms to perform a release operation this code will set. The main causes of this code setting is some type of sticking situation preventing the sector gear in the cinch release motor assembly to return to its neutral position.

POSSIBLE CAUSES
DTC PRESENT
BINDING LATCH
CINCH RELEASE MOTOR ASSEMBLY

TEST	ACTION	APPLICABILITY
1	With the DRBIII®, record and erase DTC's. Turn the ignition off, wait 10 seconds, then turn the ignition on. Operate the power sliding door several times if possible. With the DRBIII®, read ACTIVE DTCs. Does the DRBIII® display INCOMPLETE LATCH RELEASE - NO REVERSE TO UNLOAD CLUTCH? Yes → Go To 2 No → Operate the door several times and check for any binding or other obstructions. To test the reverse action, open the sliding door part way and continue holding the handle for 4 seconds. The motor should run for approximately 100ms. Perform BODY VERIFICATION TEST - VER 1.	All
2	Examine the sliding door for proper fit and alignment, loose/hard or torn seals or anything that would cause an obstruction to proper operation. Manually operate the sliding door of a known good vehicle and notice the effort needed to open and close. Compare the effort needed on the disabled sliding door. Especially notice the effort needed to unlatch and latch the door. Does it take more effort to operate the door than it should? Yes → Refer to Service information for the related symptom(s). Perform BODY VERIFICATION TEST - VER 1. No → Replace the Cinch Release Motor Assembly.. Perform BODY VERIFICATION TEST - VER 1.	All

Symptom:
INCOMPLETE LATCH RELEASE- OVERCURRENT

When Monitored and Set Condition:

INCOMPLETE LATCH RELEASE- OVERCURRENT

When Monitored: Whenever the power sliding door is operating in the closing direction.

Set Condition: The latch motor stall current of 6.2 amps was detected during a non-redundant release. The main causes of this code setting is some type of blockage during the release. This code is set during the power closing operation.

POSSIBLE CAUSES
DTC PRESENT
BINDING DOOR
FULL OPEN SWITCH STUCK
LATCH ASSEMBLY

TEST	ACTION	APPLICABILITY
1	With the DRBIII®, record and erase DTC's. Turn the ignition off, wait 10 seconds, then turn the ignition on. Operate the power sliding door several times if possible. With the DRBIII®, read ACTIVE DTCs. Does the DRBIII® display INCOMPLETE LATCH RELEASE - OVER CURRENT? Yes → Go To 2 No → Using the wiring diagram/schematic as a guide, inspect the wiring and connectors for an intermittent condition. Operate the door several times and check for any binding or other obstructions. Perform BODY VERIFICATION TEST - VER 1.	All
2	Examine the door for proper fit and alignment, lose/ hard or torn seals, worn teeth on the rack and gear (lower drive unit) or anything that would cause an obstruction to proper operation. Manually operate the other sliding door or of a known good vehicle and notice the effort needed to open and close. Compare the effort needed on the disabled door. Especially notice the effort needed to unlatch and close the door. Does it take more effort to operate the door than it should? Yes → Refer to Service information for the related symptom(S). Perform BODY VERIFICATION TEST - VER 1. No → Go To 3	All

INCOMPLETE LATCH RELEASE- OVERCURRENT — Continued

TEST	ACTION	APPLICABILITY
3	With the DRBIII® in Inputs/Outputs, read the FULL OPEN SWITCH state. Open and close the door manually and observe the Full Open Switch. Did the switch toggle from open to close? Yes → Replace the Latch Assembly. Perform BODY VERIFICATION TEST - VER 1. No → Replace the Full Open Switch. Perform BODY VERIFICATION TEST - VER 1.	All

Symptom:
INCOMPLETE LATCH RELEASE- PAWL SWITCH FAILURE

When Monitored and Set Condition:

INCOMPLETE LATCH RELEASE- PAWL SWITCH FAILURE

When Monitored: Whenever the power sliding door is operating in an opening direction.

Set Condition: The release operation was not completed due to non-transition of the pawl switch during the power release operation. The ratchet switch was detected as grounded but the pawl remained open. This code is set during the power releasing operation from a fully closed door.

POSSIBLE CAUSES
DTC PRESENT
BINDING DOOR
POWER SLIDING DOOR MODULE - PAWL CIRCUIT
GROUND WIRE OPEN
PAWL SWITCH SENSE WIRE OPEN
PAWL SWITCH

TEST	ACTION	APPLICABILITY
1	**NOTE: This DTC will only set during the cinching operation after the 4 second time out. This may make it difficult to reproduce.** With the DRBIII®, record and erase DTC's. Turn the ignition off, wait 10 seconds, then turn the ignition on. Operate the power sliding door several times if possible. With the DRBIII®, read ACTIVE DTCs. Does the DRBIII® display INCOMPLETE LATCH RELEASE - PAWL SWITCH FAILURE? Yes → Go To 2 No → Using the wiring diagram/schematic as a guide, inspect the wiring and connectors for an intermittent condition. Operate the door several times and check for any binding or other obstructions. Perform BODY VERIFICATION TEST - VER 1.	All

INCOMPLETE LATCH RELEASE- PAWL SWITCH FAILURE — Continued

TEST	ACTION	APPLICABILITY
2	Examine the door for proper fit and alignment, loose/ hard or torn seals, worn teeth on the rack and gear (lower drive unit) or anything that would cause an obstruction to proper operation. Manually operate the other sliding door or of a known good vehicle and notice the effort needed to open and close. Compare the effort needed on the disabled door. Especially notice the effort needed to unlatch and close the door. Does it take more effort to operate the door than it should? Yes → Refer to Service information for the related symptom(s). Perform BODY VERIFICATION TEST - VER 1. No → Go To 3	All
3	With the DRBIII® in Inputs/Outputs, read the PAWL state. Open the sliding door to full open position. Using a screwdriver, click the latch to the first detent while observing the DRB111®. Unlatch the latch by pulling the handle switch and observe the DRB111® for a state change. Repeat this step several times while moving the door in different positions and wiggling the wiring harness to check for an intermittent open. Did the DRB111® show the switch state changes correctly every time? Yes → Replace the Power Sliding Door Module. Perform BODY VERIFICATION TEST - VER 1. No → Go To 4	All
4	Disconnect the Sliding Door Control Module C2 connector. Disconnect the Sliding Door Latch Sensing Switch connector (latch assembly). Measure the resistance of the Ground wires (both) between the PSD C2 connector (cavity 20) and the Sliding Door Latch Sensing Switch connector. Wiggle the harness while observing the ohmmeter. Is the resistance below 5.0 ohms on both ground wires? Yes → Go To 5 No → Repair the Ground wire for an open. Perform BODY VERIFICATION TEST - VER 1.	All
5	Disconnect the Sliding Door Control Module C2 connector. Disconnect the Sliding Door Latch Sensing Switch connector (latch assembly). Measure the resistance of the Pawl Switch Sense circuit between the PSD C2 connector and the Sliding Door Latch Sensing Switch connector. Wiggle the harness while observing the ohmmeter. Is the resistance below 5.0 ohms? Yes → Go To 6 No → Repair the Pawl Switch Sense wire for an open. Perform BODY VERIFICATION TEST - VER 1.	All
6	If there are no possible causes remaining, view repair. Repair Replace the Pawl Switch (latch assembly). Perform BODY VERIFICATION TEST - VER 1.	All

Symptom:

INCOMPLETE LATCH RELEASE- SECTOR GEAR RETURN FAILURE

When Monitored and Set Condition:

INCOMPLETE LATCH RELEASE- SECTOR GEAR RETURN FAILURE

When Monitored: Whenever the power sliding door is operating.

Set Condition: If the cinch release motor takes longer than 700 ms to perform a release operation this code will set. The main causes of this code setting is some type of sticking situation preventing the sector gear in the cinch release motor assembly to return to its neutral position.

POSSIBLE CAUSES
DTC PRESENT
BINDING SLIDING DOOR
CINCH RELEASE MOTOR ASSEMBLY

TEST	ACTION	APPLICABILITY
1	With the DRBIII®, record and erase DTC's. Turn the ignition off, wait 10 seconds, then turn the ignition on. Operate the power sliding door several times if possible. With the DRBIII®, read ACTIVE DTCs. Does the DRBIII® display INCOMPLETE LATCH RELEASE - SECTOR GEAR RETURN FAILURE? Yes → Go To 2 No → Using the wiring diagram/schematic as a guide, inspect the wiring and connectors for an intermittent condition. Operate the door several times and check for any binding or other obstructions. Perform BODY VERIFICATION TEST - VER 1.	All
2	Examine the sliding door for proper fit and alignment, loose/hard or torn seals or anything that would cause an obstruction to proper operation. Manually operate the sliding door of a known good vehicle and notice the effort needed to open and close. Compare the effort needed on the disabled sliding door. Especially notice the effort needed to unlatch and close the door. Does it take more effort to operate the door than it should? Yes → Refer to Service information for the related symptom(s). Perform BODY VERIFICATION TEST - VER 1. No → Replace the Cinch Release Motor Assembly.. Perform BODY VERIFICATION TEST - VER 1.	All

Symptom:
INCOMPLETE POWER CLOSE - FULL OPEN SWITCH FAILURE

When Monitored and Set Condition:

INCOMPLETE POWER CLOSE - FULL OPEN SWITCH FAILURE

When Monitored: Whenever the power sliding door is operating in the closing direction.

Set Condition: The Full Open Switch was detected as closed before 100 hall effect pulses were counted since the start of the close operation.

POSSIBLE CAUSES
DTC PRESENT
STICKING CABLES OR SWITCH
FULL OPEN SWITCH SHORT TO GROUND
FULL OPEN SWITCH

TEST	ACTION	APPLICABILITY
1	With the DRBIII®, record and erase DTC's. Turn the ignition off, wait 10 seconds, then turn the ignition on. Operate the power sliding door several times if possible. With the DRBIII®, read ACTIVE DTCs. Does the DRBIII® display INCOMPLETE POWER CLOSE - FULL OPEN SWITCH FAILURE? Yes → Go To 2 No → Using the wiring diagram/schematic as a guide, inspect the wiring and connectors for an intermittent condition. Operate the door several times and check for any binding cables or other obstructions. Perform BODY VERIFICATION TEST - VER 1.	All
2	Examine the door for proper fit and alignment, foreign material in the lower drive unit or anything that would cause an obstruction to proper operation of the Full Open Switch. With the DRBIII® in Inputs/Outputs, read the FULL OPEN SWITCH state. Manually operate the door handle while monitoring the DRBIII®. Does the switch status change smoothly as the handle is pulled and released? Yes → Go To 3 No → Refer to Service information for the related symptom(S). Perform BODY VERIFICATION TEST - VER 1.	All

INCOMPLETE POWER CLOSE - FULL OPEN SWITCH FAILURE — Continued

TEST	ACTION	APPLICABILITY
3	With the DRBIII® in Inputs/Outputs, read the FULL OPEN SWITCH state. Open the Sliding Door to mid position. While monitoring the DRBIII®, wiggle the wiring harness from the Power Sliding Door Module to the Full Open Switch on the lower drive unit. Did the switch status ever change? Yes → Repair the Full Open Switch Sense circuit for a short to ground. Perform BODY VERIFICATION TEST - VER 1. No → Go To 4	All
4	If there are no possible causes remaining, view repair. Repair Replace the Full Open Switch (lower drive unit). Perform BODY VERIFICATION TEST - VER 1.	All

Symptom:

INCOMPLETE POWER CLOSE - EXCESSIVE HALL EFFECT SIGNAL

When Monitored and Set Condition:

INCOMPLETE POWER CLOSE - EXCESSIVE HALL EFFECT SIGNAL

When Monitored: Anytime the power sliding door is in the closing cycle.

Set Condition: If during a closing operation the PSD module detects an excessive hall effect signal time period, this code will set. Code will also set if obstacle detection becomes inoperative due to a hall effect sensor failure or high effort on door during power up.

POSSIBLE CAUSES
DTC PRESENT
POWER SLIDING DOOR MODULE - HALL EFFECT OPEN
LOWER DRIVE UNIT
BINDING DOOR
HALL EFFECT GROUND CIRCUIT OPEN
DOOR MOTOR HALL EFFECT SUPPLY WIRE OPEN
DOOR MOTOR HALL EFFECT SUPPLY WIRE SHORT TO GROUND
DOOR MOTOR HALL EFFECT SIGNAL WIRE OPEN
DOOR MOTOR HALL EFFECT SIGNAL WIRE SHORT TO GROUND
DOOR MOTOR ASSEMBLY

TEST	ACTION	APPLICABILITY
1	With the DRBIII®, record and erase DTC's. Turn the ignition off, wait 10 seconds, then turn the ignition on. Operate the power sliding door several times from stop to stop if possible. With the DRBIII®, read ACTIVE DTCs. Does the DRBIII® display INCOMPLETE POWER CLOSE - EXCESSIVE HALL EFFECT SIGNAL? Yes → Go To 2 No → Using the wiring diagram/schematic as a guide, inspect the wiring and connectors for an intermittent condition. Operate the door several times and check for any binding conditions. Perform BODY VERIFICATION TEST - VER 1.	All

INCOMPLETE POWER CLOSE - EXCESSIVE HALL EFFECT SIGNAL — Continued

TEST	ACTION	APPLICABILITY
2	Examine the door for proper fit and alignment, loose/ hard or torn seals, worn teeth on the track and gear (lower drive unit) or anything that would cause an obstruction to proper operation. Manually operate the sliding door on the other side or of a known good vehicle and notice the effort needed to open and close. Compare the effort needed on the disabled door. Does it take more effort to operate the door than it should? Yes → Refer to Service information for the related symptom(s). Perform BODY VERIFICATION TEST - VER 1. No → Go To 3	All
3	Examine the Lower Drive Unit for alignment and gear condition. Manually operate the sliding door and observe the gear and track. Is the Lower Drive Unit and Track in good condition? Yes → Go To 4 No → Replace the Lower Drive Unit or Track as necessary.. Perform BODY VERIFICATION TEST - VER 1.	All
4	Operate the door from the full open position and put an obstacle in its path to make it reverse. Did the door reverse back to the open position? Yes → Go To 5 No → Replace the Power Sliding Door Module. Perform BODY VERIFICATION TEST - VER 1.	All
5	Disconnect the Sliding Door Motor connector. Using a 12-volt test light connected to 12-volts, check the Ground circuit. Does the test light illuminate brightly? Yes → Go To 6 No → Repair the hall effect ground circuit for an open. Perform BODY VERIFICATION TEST - VER 1.	All
6	Disconnect the Sliding Door Motor connector. Disconnect the Sliding Door Control Module C2 connector. Measure the resistance of the Door Motor Hall Effect Supply circuit between the Sliding Door Motor connector and the PSD Module C2 connector. Is the resistance below 5.0 ohms? Yes → Go To 7 No → Repair the Door Motor Hall Effect Supply wire for an open. Perform BODY VERIFICATION TEST - VER 1.	All
7	Disconnect the Sliding Door Motor connector. Disconnect the Sliding Door Control Module C2 connector. Measure the resistance between ground and the Door Motor Hall Effect Supply circuit. Is the resistance below 100.0 ohms? Yes → Repair the Door Motor Hall Effect Supply wire for a short to ground. Perform BODY VERIFICATION TEST - VER 1. No → Go To 8	All

INCOMPLETE POWER CLOSE - EXCESSIVE HALL EFFECT SIGNAL — Continued

TEST	ACTION	APPLICABILITY
8	Disconnect the Sliding Door Motor connector. Disconnect the Sliding Door Control Module C2 connector. Measure the resistance of the Door Motor Hall Effect Signal circuit between the Sliding Door Motor connector and the PSD Module C2 connector. Is the resistance below 5.0 ohms? Yes → Go To 9 No → Repair the Door Motor Hall Effect Signal wire for an open. Perform BODY VERIFICATION TEST - VER 1.	All
9	Disconnect the Sliding Door Motor connector. Disconnect the Sliding Door Control Module C2 connector. Measure the resistance between ground and the Door Motor Hall Effect Signal circuit. Is the resistance below 100.0 ohms? Yes → Repair the Door Motor Hall Effect Signal wire for a short to ground. Perform BODY VERIFICATION TEST - VER 1. No → Go To 10	All
10	If there are no possible causes remaining, view repair. Repair Replace the Power Sliding Door Motor Assembly (hall effect sensor). Perform BODY VERIFICATION TEST - VER 1.	All

Symptom:
INCOMPLETE POWER CLOSE - LATCH FAILURE

When Monitored and Set Condition:

INCOMPLETE POWER CLOSE - LATCH FAILURE

When Monitored: Whenever the power sliding door is operating in the closing direction.

Set Condition: The power close operation was not completed due to latch failure. This DTC is set during a power close cycle.

POSSIBLE CAUSES
DTC PRESENT
BINDING DOOR
CINCH/RELEASE MOTOR LATCH DRIVER CIRCUIT SHORT TO GROUND
CINCH/RELEASE MOTOR LATCH DRIVER WIRE OPEN
CINCH/RELEASE MOTOR UNLATCH DRIVER WIRE OPEN
POWER SLIDING DOOR MODULE - FULL OPEN CIRCUIT OPEN
POWER SLIDING DOOR MODULE - PAWL CIRCUIT OPEN
POWER SLIDING DOOR MODULE - RATCHET CIRCUIT OPEN
GROUND WIRE OPEN - FULL OPEN SWITCH
GROUND WIRE OPEN - PAWL SWITCH
GROUND WIRE OPEN - RATCHET SWITCH
FULL OPEN SWITCH SENSE WIRE OPEN
PAWL SWITCH SENSE WIRE OPEN
SLIDING DOOR AJAR SWITCH SENSE WIRE OPEN
FULL OPEN SWITCH SENSE WIRE SHORT TO GROUND
FULL OPEN SWITCH
LATCH ASSEMBLY
LATCH ASSEMBLY
PAWL SWITCH
RATCHET SWITCH

INCOMPLETE POWER CLOSE - LATCH FAILURE — Continued

TEST	ACTION	APPLICABILITY
1	With the DRBIII®, record and erase DTC's. Turn the ignition off, wait 10 seconds, then turn the ignition on. Operate the power sliding door several times if possible. With the DRBIII®, read ACTIVE DTCs. Does the DRBIII® display INCOMPLETE POWER OPEN - LATCH FAILURE? Yes → Go To 2 No → Using the wiring diagram/schematic as a guide, inspect the wiring and connectors for an intermittent condition. Operate the door several times and check for any binding or other obstructions. Perform BODY VERIFICATION TEST - VER 1.	All
2	Examine the door for proper fit and alignment, lose/ hard or torn seals, worn teeth on the rack and gear (lower drive unit) or anything that would cause an obstruction to proper operation. Manually operate the other sliding door or of a known good vehicle and notice the effort needed to open and close. Compare the effort needed on the disabled door. Does it take more effort to operate the door than it should? Yes → Refer to Service information for the related symptom(s). Perform BODY VERIFICATION TEST - VER 1. No → Go To 3	All
3	With the DRBIII® in Inputs/Outputs, read the PAWL, RATCHET and FULL OPEN switch state. While observing the FULL OPEN switch state, manually move the door from full open to part open. The switch should toggle from CLOSED to OPEN. Move the door to the full open position. While observing the PAWL switch state, click the latch with a screwdriver to the first detent. The PAWL should toggle from CLOSED to OPEN. Move the door to the full open position. While observing the RATCHET switch state, click the latch with a screwdriver to the second detent. The RATCHET should toggle from CLOSED to OPEN. Repeat the above steps several times. Select which switch failed: FULL OPEN Switch Go To 4 PAWL Switch Go To 9 RATCHET Switch Go To 13 All switches operated properly. Go To 17	All

INCOMPLETE POWER CLOSE - LATCH FAILURE — Continued

TEST	ACTION	APPLICABILITY
4	Disconnect the Sliding Door Control Module C2 connector. Measure the resistance between the Ground circuit (cavity 20) and the Full Open Switch Sense circuit in the Sliding Door Module connector. Open the sliding door completely then partially close it. Repeat this step while observing the ohmmeter. Did the resistance change from below 15 ohms to above 1000.0 ohms when the door was moved. Yes → Replace the Power Sliding Door Module. Perform BODY VERIFICATION TEST - VER 1. No → Go To 5	All
5	Disconnect the Sliding Door Control Module C2 connector. Disconnect the Full open Switch Sense wire at the lower drive unit. Measure the resistance of the Ground wires between the PSD C2 connector (cavity 20) and the Full Open Switch connector. Wiggle the harness while observing the ohmmeter. Is the resistance below 5.0 ohms? Yes → Go To 6 No → Repair the Ground wire for an open. Perform BODY VERIFICATION TEST - VER 1.	All
6	Disconnect the Sliding Door Control Module C2 connector. Disconnect the Full open Switch Sense wire at the lower drive unit. Measure the resistance of the Full Open Switch Sense wire between the PSD C2 connector and the Full Open Switch connector. Is the resistance below 5.0 ohms? Yes → Go To 7 No → Repair the Full Open Switch Sense wire for an open. Perform BODY VERIFICATION TEST - VER 1.	All
7	Disconnect the Sliding Door Control Module C2 connector. Disconnect the Full open Switch Sense wire at the lower drive unit. Measure the resistance between ground and the Full Open Switch Sense circuit. Is the resistance below 1000.0 ohms? Yes → Repair the Full Open Switch Sense wire for a short to ground. Perform BODY VERIFICATION TEST - VER 1. No → Go To 8	All
8	If there are no possible causes remaining, view repair. Repair Replace the Full Open Switch (lower drive unit). Perform BODY VERIFICATION TEST - VER 1.	All

INCOMPLETE POWER CLOSE - LATCH FAILURE — Continued

TEST	ACTION	APPLICABILITY
9	Disconnect the Sliding Door Control Module C2 connector. Measure the resistance between ground and the Pawl Switch Sense circuit. Open the sliding door completely. Using a screwdriver, close the latch to the first detent while observing the ohmmeter. Release the latch with the handle. Repeat this step while observing the ohmmeter. Did the resistance change from below 15 ohms to above 1000.0 ohms when the latch was closed. Yes → Replace the Power Sliding Door Module. Perform BODY VERIFICATION TEST - VER 1. No → Go To 10	All
10	Disconnect the Sliding Door Control Module C2 connector. Disconnect the Sliding Door Latch Sensing Switch connector. Measure the resistance of the both Ground wires between the PSD C2 connector (cavity 20) and the Sliding Door Latch Sensing Switch connector. Wiggle the harness while observing the ohmmeter. Is the resistance below 5.0 ohms in both ground wires at the switch connector? Yes → Go To 11 No → Repair the Ground wire for an open. Perform BODY VERIFICATION TEST - VER 1.	All
11	Disconnect the Sliding Door Control Module C2 connector. Disconnect the Sliding Door Latch Sensing Switch connector (latch assembly). Measure the resistance of the Pawl Switch Sense wire between the PSD C2 connector and the Sliding Door Latch Sensing Switch connector. Is the resistance below 5.0 ohms? Yes → Go To 12 No → Repair the Pawl Switch Sense wire for an open. Perform BODY VERIFICATION TEST - VER 1.	All
12	If there are no possible causes remaining, view repair. Repair Replace the Pawl Switch (latch assembly). Perform BODY VERIFICATION TEST - VER 1.	All
13	Disconnect the Sliding Door Control Module C2 connector. **NOTE: The Sliding Door Ajar Switch Sense circuit is also the Ratchet Switch Sense circuit on power doors.** Disconnect the Sliding Door Latch Sensing Switch connector. Measure the resistance between the Ground circuit (cavity 20) and the Sliding Door Ajar Switch Sense circuit. Open the sliding door completely. Using a screwdriver, close the latch to the second detent while observing the ohmmeter. Release the latch with the handle. Repeat this step while observing the ohmmeter. Did the resistance change from below 15 ohms to above 1000.0 ohms when the latch was closed. Yes → Replace the Power Sliding Door Module. Perform BODY VERIFICATION TEST - VER 1. No → Go To 14	All

INCOMPLETE POWER CLOSE - LATCH FAILURE — Continued

TEST	ACTION	APPLICABILITY
14	Disconnect the Sliding Door Control Module C2 connector. Disconnect the Sliding Door Latch Sensing Switch connector. Measure the resistance of the both Ground wires between the PSD C2 connector (cavity 20) and the Sliding Door Latch Sensing Switch connector. Wiggle the harness while observing the ohmmeter. Is the resistance below 5.0 ohms in both ground wires at the switch connector? Yes → Go To 15 No → Repair the Ground wire for an open. Perform BODY VERIFICATION TEST - VER 1.	All
15	Disconnect the Sliding Door Control Module C2 connector. Disconnect the Sliding Door Latch Sensing Switch connector (latch assembly). Measure the resistance of the Sliding Door Ajar Switch Sense wire between the PSD C2 connector and the Sliding Door Latch Sensing Switch connector. Is the resistance below 5.0 ohms? Yes → Go To 16 No → Repair the Sliding Door Ajar Switch Sense wire for an open. Perform BODY VERIFICATION TEST - VER 1.	All
16	If there are no possible causes remaining, view repair. Repair Replace the Ratchet Switch (latch assembly). Perform BODY VERIFICATION TEST - VER 1.	All
17	Turn the ignition off. Disconnect the Sliding Door Control Module C2 connector. Measure the resistance between the Cinch/Release Motor Latch Driver circuit and the Cinch/Release Motor Unlatch Driver circuit in the Sliding Door Module connector. Wiggle the harness and check for an intermittent open condition. Is the resistance below 2.0 ohms? Yes → Go To 18 No → Go To 19	All
18	Turn the ignition off. Disconnect the Sliding Door Control Module C2 connector. Measure the resistance between ground and the Cinch/Release Motor Latch Driver circuit. Wiggle the harness and check for an intermittent open condition. Is the resistance below 100.0 ohms? Yes → Repair the Cinch/Release Motor Latch Driver circuit for a short to ground. This could be the Cinch/Release Motor Latch Driver or Unlatch Driver or the motor itself. Perform BODY VERIFICATION TEST - VER 1. No → Test Complete.	All

INCOMPLETE POWER CLOSE - LATCH FAILURE — Continued

TEST	ACTION	APPLICABILITY
19	Turn the ignition off. Disconnect the Sliding Door Control Module C2 connector. Disconnect the Cinch/Release Motor connector. Measure the resistance of the Cinch/Release Motor Latch Driver circuit between the Sliding Door Control Module C2 connector and the Cinch/Release Motor connector. Wiggle the harness and check for an intermittent open condition. Is the resistance below 5.0 ohms? Yes → Go To 20 No → Repair the Cinch/Release Motor Latch Driver wire for an open. Perform BODY VERIFICATION TEST - VER 1.	All
20	Turn the ignition off. Disconnect the Sliding Door Control Module C2 connector. Disconnect the Cinch/Release Motor connector. Measure the resistance of the Cinch/Release Motor Unlatch Driver circuit between the Sliding Door Control Module C2 connector and the Cinch/Release Motor connector. Wiggle the harness and check for an intermittent open condition. Is the resistance below 5.0 ohms? Yes → Go To 21 No → Repair the Cinch/Release Motor Unlatch Driver wire for an open. Perform BODY VERIFICATION TEST - VER 1.	All
21	If there are no possible causes remaining, view repair. Repair Replace the Latch Assembly. Perform BODY VERIFICATION TEST - VER 1.	All

Symptom:
INCOMPLETE POWER CLOSE - OVERCURRENT

When Monitored and Set Condition:

INCOMPLETE POWER CLOSE - OVERCURRENT

When Monitored: Anytime the Power Sliding Door is operating in the closing direction.

Set Condition: The drive motor stall current of over 16 amps has been detected for over 500 ms. during a close operation.

POSSIBLE CAUSES
DTC PRESENT
BINDING DOOR
GROUND CIRCUIT OPEN
SLIDING DOOR CLOSE DRIVER CIRCUIT SHORT TO GROUND
CINCH/RELEASE MOTOR UNLATCH DRIVER CIRCUIT SHORT TO GROUND
DOOR MOTOR CLUTCH DRIVER CIRCUIT SHORT TO GROUND
POWER SLIDING DOOR MOTOR/CLUTCH

TEST	ACTION	APPLICABILITY
1	With the DRBIII®, record and erase DTC's. Turn the ignition off, wait 10 seconds, then turn the ignition on. Operate the power sliding door several times if possible. With the DRBIII®, read DTCs. Does the DRBIII® display INCOMPLETE POWER CLOSE - OVERCURRENT? Yes → Go To 2 No → Using the wiring diagram/schematic as a guide, inspect the wiring and connectors for an intermittent condition. Operate the door several times and check for any binding conditions. Perform BODY VERIFICATION TEST - VER 1.	All
2	Examine the door for proper fit and alignment, loose/ hard or torn seals, worn teeth on the rack and gear (lower drive unit) or anything that would cause an obstruction to proper operation. Manually operate the other sliding door or one of a known good vehicle and notice the effort needed. Compare the effort needed on the disabled vehicle. Does it take more effort to operate the door than it should? Yes → Refer to Service information for the related symptom(s). Perform BODY VERIFICATION TEST - VER 1. No → Go To 3	All

INCOMPLETE POWER CLOSE - OVERCURRENT — Continued

TEST	ACTION	APPLICABILITY
3	Turn the ignition off. Disconnect the Sliding Door Control Module C1 connector. Using a 12-volt test light connected to 12-volts, check the Ground circuit. Wiggle the harness and check for an intermittent open condition. Does the test light illuminate brightly? Yes → Go To 4 No → Repair the Ground circuit for an open. Perform BODY VERIFICATION TEST - VER 1.	All
4	Turn the ignition off. Disconnect the Sliding Door Control Module C1 connector. Measure the resistance between ground and the Sliding Door Close Driver circuit. Wiggle the harness and check for an intermittent short circuit condition. Is the resistance below 1000.0 ohms? Yes → Repair the Sliding Door Close Driver circuit for a short to ground. Perform BODY VERIFICATION TEST - VER 1. No → Go To 5	All
5	Turn the ignition off. Disconnect the Sliding Door Control Module C2 connector. Measure the resistance between ground and the Cinch/Release Motor Unlatch Driver circuit. Wiggle the harness and check for an intermittent open condition. Is the resistance below 1000.0 ohms? Yes → Repair the Cinch/Release Motor Unlatch Driver circuit for a short to ground. Perform BODY VERIFICATION TEST - VER 1. No → Go To 6	All
6	Turn the ignition off. Disconnect the Sliding Door Control Module C2 connector. Measure the resistance between ground and the Door Motor Clutch Driver circuit. Wiggle the harness and check for an intermittent open condition. Is the resistance below 5.0 ohms? Yes → Repair the Door Motor Clutch Driver circuit for a short to ground. Perform BODY VERIFICATION TEST - VER 1. No → Go To 7	All
7	If there are no possible causes remaining, view repair. Repair Replace the Power Sliding Door Motor/Clutch assembly. Perform BODY VERIFICATION TEST - VER 1.	All

Symptom:
INCOMPLETE POWER CLOSE - TIME OUT

When Monitored and Set Condition:

INCOMPLETE POWER CLOSE - TIME OUT

When Monitored: Anytime the Power Sliding Door is operating in the closing direction.

Set Condition: The power close operation was not completed within 20 seconds. This may be caused by very high opening effort. A weak hall effect signal, low motor output or defective clutch could also set this code.

POSSIBLE CAUSES
DTC PRESENT
BINDING DOOR
MOTOR/CLUTCH ASSEMBLY

TEST	ACTION	APPLICABILITY
1	With the DRBIII®, record and erase DTC's. Turn the ignition off, wait 10 seconds, then turn the ignition on. Operate the power sliding door several times from stop to stop - if possible. With the DRBIII®, read ACTIVE DTCs. Does the DRBIII® display INCOMPLETE POWER CLOSE - TIME-OUT? Yes → Go To 2 No → Using the wiring diagram/schematic as a guide, inspect the wiring and connectors for an intermittent condition. Operate the door several times and check for any binding or other obstructions. Perform BODY VERIFICATION TEST - VER 1.	All
2	Examine the door for proper fit and alignment, loose/ hard or torn seals, worn teeth on the rack and gear (lower drive unit) or anything that would cause an obstruction to proper operation. Manually operate the sliding door of a known good vehicle or the other sliding door and notice the effort needed. Compare the effort needed on the disabled door. Does it take more effort to operate the door than it should? Yes → Refer to Service information for the related symptom(s). Perform BODY VERIFICATION TEST - VER 1. No → Replace the Motor/Clutch Assembly. Perform BODY VERIFICATION TEST - VER 1.	All

Symptom:

INCOMPLETE POWER CLOSE - TRANSISTOR SHORTED

When Monitored and Set Condition:

INCOMPLETE POWER CLOSE - TRANSISTOR SHORTED

When Monitored: Whenever the power sliding door is performing a power close operation.

Set Condition: The Power Sliding Door Module detects that the motor is rotating (monitors hall effect pulses) even though the controlled PWM rate is 0 percent. This DTC is set during the power close operation.

POSSIBLE CAUSES
DTC PRESENT
SLIDING DOOR MODULE SHORT TO GROUND
SLIDING DOOR OPEN DRIVER WIRE SHORT TO GROUND
SLIDING DOOR CLOSE DRIVER WIRE SHORT TO GROUND
POWER SLIDING DOOR MOTOR

TEST	ACTION	APPLICABILITY
1	With the DRBIII®, record and erase DTC's. Turn the ignition off, wait 10 seconds, then turn the ignition on. Operate the power sliding door several times if possible. With the DRBIII®, read ACTIVE DTCs. Does the DRBIII® display INCOMPLETE POWER OPEN - TRANSISTOR SHORTED? Yes → Go To 2 No → Using the wiring diagram/schematic as a guide, inspect the wiring and connectors for an intermittent condition. Operate the sliding door several times and check for any binding or poor door operation. Perform BODY VERIFICATION TEST - VER 1.	All
2	Turn the ignition off. Disconnect the Power Sliding Door Module C1 harness connector. Measure the resistance between ground and the Sliding Door Open Driver circuit. Is the resistance below 1000.0 ohms? Yes → Go To 3 No → Replace the Sliding Door Module. Perform BODY VERIFICATION TEST - VER 1.	All

INCOMPLETE POWER CLOSE - TRANSISTOR SHORTED — Continued

TEST	ACTION	APPLICABILITY
3	Turn the ignition off. Disconnect the Power Sliding Door Module C1 harness connector. Disconnect the Sliding Door Motor connector. Measure the resistance between ground and the Liftgate Open Driver circuit. Is the resistance below 1000.0 ohms? Yes → Repair the Sliding Door Open Driver wire for a short to ground. Perform BODY VERIFICATION TEST - VER 1. No → Go To 4	All
4	Turn the ignition off. Disconnect the Power Sliding Door Module C1 harness connector. Disconnect the Sliding Door Motor connector. Measure the resistance between ground and the Sliding Door Close Driver circuit. Is the resistance below 1000.0 ohms? Yes → Repair the Sliding Door Close Driver wire for a short to ground. Perform BODY VERIFICATION TEST - VER 1. No → Replace the Power Sliding Door Motor.. Perform BODY VERIFICATION TEST - VER 1.	All

Symptom:

INCOMPLETE POWER CLOSE- VOLTAGE BELOW MINIMUM LEVEL

When Monitored and Set Condition:

INCOMPLETE POWER CLOSE- VOLTAGE BELOW MINIMUM LEVEL

When Monitored: Whenever the power sliding door is performing a power close operation.

Set Condition: The PSD Module detects that the voltage is below 9.5 volts during the power close operation.

POSSIBLE CAUSES
DTC PRESENT
MODULE VOLTAGE LOW
BINDING SLIDING DOOR
DRB OPERATING VOLTAGE LOW
POWER SLIDING DOOR MODULE - HIGH RESISTANCE
POWER SLIDING DOOR MOTOR

TEST	ACTION	APPLICABILITY
1	With the DRBIII®, record and erase DTC's. Turn the ignition off, wait 10 seconds, then turn the ignition on. Operate the power sliding door several times if possible. With the DRBIII®, read DTCs. Does the DRBIII® display INCOMPLETE POWER CLOSE - VOLTAGE BELOW MINIMUM LEVEL? Yes → Go To 2 No → Using the wiring diagram/schematic as a guide, inspect the wiring and connectors for an intermittent condition. Operate the door several times and check for any binding conditions. Perform BODY VERIFICATION TEST - VER 1.	All
2	Examine the door for proper fit and alignment, loose/ hard or torn seals, worn teeth on the track and gear (lower drive unit) or anything that would cause an obstruction to proper operation. Manually operate the other sliding door or of a known good vehicle and notice the effort needed to open and close. Compare the effort needed on the disabled door. Does it take more effort to operate the sliding door than it should? Yes → Refer to Service information for the related symptom(s). Perform BODY VERIFICATION TEST - VER 1. No → Go To 3	All

INCOMPLETE POWER CLOSE- VOLTAGE BELOW MINIMUM LEVEL — Continued

TEST	ACTION	APPLICABILITY
3	**NOTE: Test the battery to ensure it is fully charged and in good condition before proceeding.** Turn the ignition off. Turn all lights and accessories off. With the DRBIII® in ″Sliding Door″ ″Monitor Display″ ″PCI Bus Info″ read the ″Battery Voltage″ and compare it to the ″PSD Bat Volts Input″. **NOTE: If the difference is greater than 0.5 volts, backprobe the Fused B(+) at the module to verify.** Does the voltage vary more than 0.5 volts? Yes → Using the wiring diagram/schematic as a guide, inspect the wiring and connectors. Locate and repair the reason for the voltage drop. Perform BODY VERIFICATION TEST - VER 1. No → Go To 4	All
4	Turn the ignition off. Turn all lights and accessories off. With the DRBIII® in ″Sliding Door″ ″Monitor Display″ ″PCI Bus Info″ read the ″Battery Voltage″ and compare it to the ″PSD Bat Volts Input″. Operate the power sliding door and observe the voltage difference. **NOTE: If the difference is greater than 1.6 volts, backprobe the Fused B(+) at the module to verify.** Does the voltage vary more than 1.6 volts when the liftgate is operating?? Yes → Using the wiring diagram/schematic as a guide, inspect the wiring and connectors. Locate and repair the reason for the voltage drop. Perform BODY VERIFICATION TEST - VER 1. No → Go To 5	All
5	Turn the ignition off. Turn all lights and accessories off. Remove the sliding door trim panel to gain access to the Power Sliding Door Module. Backprobe voltmeter leads between the Fused B(+) and the Sliding Door Close Driver circuits in the PSD C1 connector. Open the sliding door. Operate the power sliding door in the CLOSE position and observe the voltage difference. Does the voltage vary more than 0.2 volts when the sliding door is closing? Yes → Replace the Power Sliding Door Module. Perform BODY VERIFICATION TEST - VER 1. No → Go To 6	All
6	If there are no possible causes remaining, view repair. Repair Check the wiring and connections from the module to the motor for high resistance. If the wiring is okay, replace the Power Sliding Door Motor assembly. Perform BODY VERIFICATION TEST - VER 1.	All

Symptom:
INCOMPLETE POWER OPEN - FULL OPEN SWITCH FAILURE

When Monitored and Set Condition:

INCOMPLETE POWER OPEN - FULL OPEN SWITCH FAILURE

When Monitored: Whenever the power sliding door is operating in the opening direction.

Set Condition: The Full Open Switch was detected as closed before 200 hall effect pulses were counted since the start of the open operation.

POSSIBLE CAUSES
DTC PRESENT
STICKING CABLES OR SWITCH
FULL OPEN SWITCH SENSE CIRCUIT SHORT TO GROUND
FULL OPEN SWITCH

TEST	ACTION	APPLICABILITY
1	With the DRBIII®, record and erase DTC's. Turn the ignition off, wait 10 seconds, then turn the ignition on. Operate the power sliding door several times if possible. With the DRBIII®, read ACTIVE DTCs. Does the DRBIII® display INCOMPLETE POWER OPEN - FULL OPEN SWITCH FAILURE? Yes → Go To 2 No → Using the wiring diagram/schematic as a guide, inspect the wiring and connectors for an intermittent condition. Operate the door several times and check for any binding cables or other obstructions. Perform BODY VERIFICATION TEST - VER 1.	All
2	Examine the door for proper fit and alignment, foreign material in the lower drive unit or anything that would cause an obstruction to proper operation of the Full Open Switch. With the DRBIII® in Inputs/Outputs, read the FULL OPEN SWITCH state. Manually operate the door handle while monitoring the DRBIII®. Does the switch status change smoothly as the handle is pulled and released? Yes → Go To 3 No → Refer to Service information for the related symptom(S). Perform BODY VERIFICATION TEST - VER 1.	All

INCOMPLETE POWER OPEN - FULL OPEN SWITCH FAILURE — Continued

TEST	ACTION	APPLICABILITY
3	With the DRBIII® in Inputs/Outputs, read the FULL OPEN SWITCH state. Open the Sliding Door to mid position. While monitoring the DRBIII®, wiggle the wiring harness from the Power Sliding Door Module to the Full Open Switch on the lower drive unit. Did the switch status ever change? Yes → Repair the Full Open Switch Sense circuit for a short to ground. Perform BODY VERIFICATION TEST - VER 1. No → Go To 4	All
4	If there are no possible causes remaining, view repair. Repair Replace the Full Open Switch (lower drive unit). Perform BODY VERIFICATION TEST - VER 1.	All

Symptom:

INCOMPLETE POWER OPEN - EXCESSIVE HALL EFFECT SIGNAL

When Monitored and Set Condition:

INCOMPLETE POWER OPEN - EXCESSIVE HALL EFFECT SIGNAL

When Monitored: Anytime the power sliding door is in the opening cycle.

Set Condition: If during an opening operation the PSD module detects an excessive hall effect signal time period, this code will set. Code will also set if obstacle detection becomes inoperative due to a hall effect sensor failure or high effort on door during power up.

POSSIBLE CAUSES
DTC PRESENT
POWER SLIDING DOOR MODULE - HALL EFFECT OPEN
LOWER DRIVE UNIT
BINDING DOOR
HALL EFFECT GROUND CIRCUIT OPEN
DOOR MOTOR HALL EFFECT SUPPLY WIRE OPEN
DOOR MOTOR HALL EFFECT SUPPLY WIRE SHORT TO GROUND
DOOR MOTOR HALL EFFECT SIGNAL WIRE OPEN
DOOR MOTOR HALL EFFECT SIGNAL WIRE SHORT TO GROUND
DOOR MOTOR ASSEMBLY

TEST	ACTION	APPLICABILITY
1	With the DRBIII®, record and erase DTC's. Turn the ignition off, wait 10 seconds, then turn the ignition on. Operate the power sliding door several times from stop to stop if possible. With the DRBIII®, read ACTIVE DTCs. Does the DRBIII® display INCOMPLETE POWER OPEN - EXCESSIVE HALL EFFECT SIGNAL? Yes → Go To 2 No → Using the wiring diagram/schematic as a guide, inspect the wiring and connectors for an intermittent condition. Operate the door several times and check for any binding conditions. Perform BODY VERIFICATION TEST - VER 1.	All

INCOMPLETE POWER OPEN - EXCESSIVE HALL EFFECT SIGNAL — Continued

TEST	ACTION	APPLICABILITY
2	Examine the door for proper fit and alignment, loose/ hard or torn seals, worn teeth on the track and gear (lower drive unit) or anything that would cause an obstruction to proper operation. Manually operate the sliding door on the other side or of a known good vehicle and notice the effort needed to open and close. Compare the effort needed on the disabled door. Does it take more effort to operate the door than it should? Yes → Refer to Service information for the related symptom(s). Perform BODY VERIFICATION TEST - VER 1. No → Go To 3	All
3	Examine the Lower Drive Unit for alignment and gear condition. Manually operate the sliding door and observe the gear and track. Is the Lower Drive Unit and Track in good condition? Yes → Go To 4 No → Replace the Lower Drive Unit and Track as necessary. Perform BODY VERIFICATION TEST - VER 1.	All
4	Operate the door from the full closed position and put an obstacle in it's path to make it reverse. Did the door reverse back to the closed position? Yes → Go To 5 No → Replace the Power Sliding Door Module. Perform BODY VERIFICATION TEST - VER 1.	All
5	Disconnect the Sliding Door Motor connector. Using a 12-volt test light connected to 12-volts, check the Ground circuit. Does the test light illuminate brightly? Yes → Go To 6 No → Repair the hall effect ground circuit for an open. Perform BODY VERIFICATION TEST - VER 1.	All
6	Disconnect the Sliding Door Motor connector. Disconnect the Sliding Door Control Module C2 connector. Measure the resistance of the Door Motor Hall Effect Supply circuit between the Sliding Door Motor connector and the PSD Module C2 connector. Is the resistance below 5.0 ohms? Yes → Go To 7 No → Repair the Door Motor Hall Effect Supply wire for an open. Perform BODY VERIFICATION TEST - VER 1.	All
7	Disconnect the Sliding Door Motor connector. Disconnect the Sliding Door Control Module C2 connector. Measure the resistance between ground and the Door Motor Hall Effect Supply circuit. Is the resistance below 100.0 ohms? Yes → Repair the Door Motor Hall Effect Supply wire for a short to ground. Perform BODY VERIFICATION TEST - VER 1. No → Go To 8	All

INCOMPLETE POWER OPEN - EXCESSIVE HALL EFFECT SIGNAL — Continued

TEST	ACTION	APPLICABILITY
8	Disconnect the Sliding Door Motor connector. Disconnect the Sliding Door Control Module C2 connector. Measure the resistance of the Door Motor Hall Effect Signal circuit between the Sliding Door Motor connector and the PSD Module C2 connector. Is the resistance below 5.0 ohms? Yes → Go To 9 No → Repair the Door Motor Hall Effect Signal wire for an open. Perform BODY VERIFICATION TEST - VER 1.	All
9	Disconnect the Sliding Door Motor connector. Disconnect the Sliding Door Control Module C2 connector. Measure the resistance between ground and the Door Motor Hall Effect Signal circuit. Is the resistance below 100.0 ohms? Yes → Repair the Door Motor Hall Effect Signal wire for a short to ground. Perform BODY VERIFICATION TEST - VER 1. No → Go To 10	All
10	If there are no possible causes remaining, view repair. Repair Replace the Power Sliding Door Motor Assembly (hall effect sensor). Perform BODY VERIFICATION TEST - VER 1.	All

Symptom:
INCOMPLETE POWER OPEN - LATCH FAILURE

When Monitored and Set Condition:

INCOMPLETE POWER OPEN - LATCH FAILURE

When Monitored: Whenever the power sliding door is operating in the opening direction.

Set Condition: The power open operation was not completed due to latch failure. This DTC is set during a power open cycle.

POSSIBLE CAUSES
DTC PRESENT
BINDING DOOR
CINCH/RELEASE MOTOR LATCH DRIVER CIRCUIT SHORT TO GROUND
CINCH/RELEASE MOTOR LATCH DRIVER WIRE OPEN
CINCH/RELEASE MOTOR UNLATCH DRIVER WIRE OPEN
POWER SLIDING DOOR MODULE - FULL OPEN CIRCUIT OPEN
POWER SLIDING DOOR MODULE - PAWL CIRCUIT OPEN
POWER SLIDING DOOR MODULE - RATCHET CIRCUIT OPEN
FULL OPEN SWITCH SENSE WIRE OPEN
PAWL SWITCH SENSE WIRE OPEN
SLIDING DOOR AJAR SWITCH SENSE WIRE OPEN
FULL OPEN SWITCH SENSE WIRE SHORT TO GROUND
FULL OPEN SWITCH
LATCH ASSEMBLY
LATCH ASSEMBLY
PAWL SWITCH
RATCHET SWITCH

TEST	ACTION	APPLICABILITY
1	With the DRBIII®, record and erase DTC's. Turn the ignition off, wait 10 seconds, then turn the ignition on. Operate the power sliding door several times if possible. With the DRBIII®, read ACTIVE DTCs. Does the DRBIII® display INCOMPLETE POWER OPEN - LATCH FAILURE? Yes → Go To 2 No → Using the wiring diagram/schematic as a guide, inspect the wiring and connectors for an intermittent condition. Operate the door several times and check for any binding or other obstructions. Perform BODY VERIFICATION TEST - VER 1.	All

INCOMPLETE POWER OPEN - LATCH FAILURE — Continued

TEST	ACTION	APPLICABILITY
2	Examine the door for proper fit and alignment, loose/ hard or torn seals, worn teeth on the rack and gear (lower drive unit) or anything that would cause an obstruction to proper operation. Manually operate the other sliding door or of a known good vehicle and notice the effort needed to open and close. Compare the effort needed on the disabled door. Does it take more effort to operate the door than it should? Yes → Refer to Service information for the related symptom(s). Perform BODY VERIFICATION TEST - VER 1. No → Go To 3	All
3	With the DRBIII® in Inputs/Outputs, read the PAWL, RATCHET and FULL OPEN switch state. While observing the FULL OPEN switch state, manually move the door from full open to part open. The switch should toggle from CLOSED to OPEN. Move the door to the full open position. While observing the PAWL switch state, click the latch with a screwdriver to the first detent. The PAWL should toggle from CLOSED to OPEN. Move the door to the full open position. While observing the RATCHET switch state, click the latch with a screwdriver to the second detent. The RATCHET should toggle from CLOSED to OPEN. Repeat the above steps several times. Select which switch failed: FULL OPEN Switch Go To 4 PAWL Switch Go To 8 RATCHET Switch Go To 11 All switches operated properly. Go To 14	All
4	Disconnect the Sliding Door Control Module C2 connector. Measure the resistance between ground and the Full Open Switch Sense circuit. Open the sliding door completely then partially close it. Repeat this step while observing the ohmmeter. Did the resistance change from below 15 ohms to above 1000.0 ohms while moving the door? Yes → Replace the Power Sliding Door Module. Perform BODY VERIFICATION TEST - VER 1. No → Go To 5	All
5	Disconnect the Sliding Door Control Module C2 connector. Disconnect the Full open Switch Sense wire at the lower drive unit. Measure the resistance of the Full Open Switch Sense wire between the PSD C2 connector and the Full Open Switch connector. Is the resistance below 5.0 ohms? Yes → Go To 6 No → Repair the Full Open Switch Sense wire for an open. Perform BODY VERIFICATION TEST - VER 1.	All

INCOMPLETE POWER OPEN - LATCH FAILURE — Continued

TEST	ACTION	APPLICABILITY
6	Disconnect the Sliding Door Control Module C2 connector. Disconnect the Full open Switch Sense wire at the lower drive unit. Measure the resistance between ground and the Full Open Switch Sense circuit. Is the resistance below 1000.0 ohms? Yes → Repair the Full Open Switch Sense wire for a short to ground. Perform BODY VERIFICATION TEST - VER 1. No → Go To 7	All
7	If there are no possible causes remaining, view repair. Repair Replace the Full Open Switch (lower drive unit). Perform BODY VERIFICATION TEST - VER 1.	All
8	Disconnect the Sliding Door Control Module C2 connector. Measure the resistance between ground and the Pawl Switch Sense circuit. Open the sliding door completely. Using a screwdriver, close the latch to the first detent while observing the ohmmeter. Release the latch with the handle. Repeat this step while observing the ohmmeter. Did the resistance change from below 15 ohms to above 1000.0 ohms while moving the door? Yes → Replace the Power Sliding Door Module. Perform BODY VERIFICATION TEST - VER 1. No → Go To 9	All
9	Disconnect the Sliding Door Control Module C2 connector. Disconnect the Sliding Door Latch Sensing Switch connector (latch assembly). Measure the resistance of the Pawl Switch Sense wire between the PSD C2 connector and the Sliding Door Latch Sensing Switch connector. Is the resistance below 5.0 ohms? Yes → Go To 10 No → Repair the Pawl Switch Sense wire for an open. Perform BODY VERIFICATION TEST - VER 1.	All
10	If there are no possible causes remaining, view repair. Repair Replace the Pawl Switch (latch assembly). Perform BODY VERIFICATION TEST - VER 1.	All
11	Disconnect the Sliding Door Control Module C2 connector. **NOTE: The Sliding Door Ajar Switch Sense circuit is also the Ratchet Switch Sense circuit on power doors.** Measure the resistance between ground and the Sliding Door Ajar Switch Sense circuit. Open the sliding door completely. Using a screwdriver, close the latch to the second detent while observing the ohmmeter. Release the latch with the handle. Repeat this step while observing the ohmmeter. Did the resistance change from below 15 ohms to above 1000.0 ohms when the latch changed states? Yes → Replace the Power Sliding Door Module. Perform BODY VERIFICATION TEST - VER 1. No → Go To 12	All

INCOMPLETE POWER OPEN - LATCH FAILURE — Continued

TEST	ACTION	APPLICABILITY
12	Disconnect the Sliding Door Control Module C2 connector. Disconnect the Sliding Door Latch Sensing Switch connector (latch assembly). Measure the resistance of the Sliding Door Ajar Switch Sense wire between the PSD C2 connector and the Sliding Door Latch Sensing Switch connector. Is the resistance below 5.0 ohms? Yes → Go To 13 No → Repair the Sliding Door Ajar Switch Sense wire for an open. Perform BODY VERIFICATION TEST - VER 1.	All
13	If there are no possible causes remaining, view repair. Repair Replace the Ratchet Switch (latch assembly). Perform BODY VERIFICATION TEST - VER 1.	All
14	Turn the ignition off. Disconnect the Sliding Door Control Module C2 connector. Measure the resistance between the Cinch/Release Motor Latch Driver circuit and the Cinch/Release Motor Unlatch Driver circuit. Wiggle the harness and check for an intermittent open condition. Is the resistance below 2.0 ohms? Yes → Go To 15 No → Go To 16	All
15	Turn the ignition off. Disconnect the Sliding Door Control Module C2 connector. Measure the resistance between ground and the Cinch/Release Motor Latch Driver circuit. Wiggle the harness and check for an intermittent open condition. Is the resistance below 100.0 ohms? Yes → Repair the Cinch/Release Motor Latch Driver circuit for a short to ground. This could be the Cinch/Release Motor Latch Driver or Unlatch Driver or the motor itself. Perform BODY VERIFICATION TEST - VER 1. No → Replace the Latch Assembly. Perform BODY VERIFICATION TEST - VER 1.	All
16	Turn the ignition off. Disconnect the Sliding Door Control Module C2 connector. Disconnect the Cinch/Release Motor connector. Measure the resistance of the Cinch/Release Motor Latch Driver circuit between the Sliding Door Control Module C2 connector and the Cinch/Release Motor connector. Wiggle the harness and check for an intermittent open condition. Is the resistance below 5.0 ohms? Yes → Go To 17 No → Repair the Cinch/Release Motor Latch Driver wire for an open. Perform BODY VERIFICATION TEST - VER 1.	All

INCOMPLETE POWER OPEN - LATCH FAILURE — Continued

TEST	ACTION	APPLICABILITY
17	Turn the ignition off. Disconnect the Sliding Door Control Module C2 connector. Disconnect the Cinch/Release Motor connector. Measure the resistance of the Cinch/Release Motor Unlatch Driver circuit between the Sliding Door Control Module C2 connector and the Cinch/Release Motor connector. Wiggle the harness and check for an intermittent open condition. Is the resistance below 5.0 ohms? Yes → Go To 18 No → Repair the Cinch/Release Motor Unlatch Driver wire for an open. Perform BODY VERIFICATION TEST - VER 1.	All
18	If there are no possible causes remaining, view repair. Repair Replace the Latch Assembly. Perform BODY VERIFICATION TEST - VER 1.	All

Symptom:
INCOMPLETE POWER OPEN - OVERCURRENT

When Monitored and Set Condition:

INCOMPLETE POWER OPEN - OVERCURRENT

When Monitored: Anytime the Power Sliding Door is in a power open operation.

Set Condition: The drive motor stall current of over 16 amps has been detected for over 500 ms. during an open operation.

POSSIBLE CAUSES
DTC PRESENT
BINDING DOOR
GROUND CIRCUIT OPEN
SLIDING DOOR OPEN DRIVER CIRCUIT SHORT TO GROUND
CINCH/RELEASE MOTOR LATCH DRIVER CIRCUIT OPEN
CINCH/RELEASE MOTOR LATCH DRIVER CIRCUIT SHORT TO GROUND
DOOR MOTOR CLUTCH DRIVER CIRCUIT SHORT TO GROUND
POWER SLIDING DOOR MOTOR/CLUTCH

TEST	ACTION	APPLICABILITY
1	With the DRBIII®, record and erase DTC's. Turn the ignition off, wait 10 seconds, then turn the ignition on. Operate the power sliding door several times if possible. With the DRBIII®, read DTCs. Does the DRBIII® display INCOMPLETE POWER OPEN - OVERCURRENT? Yes → Go To 2 No → Using the wiring diagram/schematic as a guide, inspect the wiring and connectors for an intermittent condition. Operate the door several times and check for any binding conditions. Perform BODY VERIFICATION TEST - VER 1.	All
2	Examine the door for proper fit and alignment, loose/ hard or torn seals, worn teeth on the rack and gear (lower drive unit) or anything that would cause an obstruction to proper operation. Manually operate the sliding door of a known good vehicle and notice the effort needed. Compare the effort needed on the disabled vehicle. Does it take more effort to operate the door than it should? Yes → Refer to Service information for the related symptom(s). Perform BODY VERIFICATION TEST - VER 1. No → Go To 3	All

INCOMPLETE POWER OPEN - OVERCURRENT — Continued

TEST	ACTION	APPLICABILITY
3	Turn the ignition off. Disconnect the Sliding Door Control Module C1 connector. Using a 12-volt test light connected to 12-volts, check the Ground circuit. Wiggle the harness and check for an intermittent open condition. Does the test light illuminate brightly? Yes → Go To 4 No → Repair the Ground circuit for an open. Perform BODY VERIFICATION TEST - VER 1.	All
4	Turn the ignition off. Disconnect the Sliding Door Control Module C1 connector. Measure the resistance between ground and the Sliding Door Open Driver circuit. Wiggle the harness and check for an intermittent short circuit condition. Is the resistance below 1000.0 ohms? Yes → Repair the Sliding Door Open Driver circuit for a short to ground. Perform BODY VERIFICATION TEST - VER 1. No → Go To 5	All
5	Turn the ignition off. Disconnect the Sliding Door Control Module C2 connector. Measure the resistance between the Cinch/Release Motor Latch Driver circuit and the Cinch/Release Motor Unlatch Driver circuit. Wiggle the harness and check for an intermittent open condition. Is the resistance below 2.0 ohms? Yes → Go To 6 No → Repair the Cinch/Release Motor Latch Driver circuit for an open. Perform BODY VERIFICATION TEST - VER 1.	All
6	Turn the ignition off. Disconnect the Sliding Door Control Module C2 connector. Measure the resistance between ground and the Cinch/Release Motor Latch Driver circuit. Wiggle the harness and check for an intermittent short condition. Is the resistance below 100.0 ohms? Yes → Repair the Cinch/Release Motor Latch Driver circuit for a short to ground. Perform BODY VERIFICATION TEST - VER 1. No → Go To 7	All
7	Turn the ignition off. Disconnect the Sliding Door Control Module C2 connector. Measure the resistance between ground and the Door Motor Clutch Driver circuit. Wiggle the harness and check for an intermittent short condition. Is the resistance below 100.0 ohms? Yes → Repair the Door Motor Clutch Driver circuit for a short to ground. Perform BODY VERIFICATION TEST - VER 1. No → Go To 8	All
8	If there are no possible causes remaining, view repair. Repair Replace the Power Sliding Door Motor/Clutch assembly. Perform BODY VERIFICATION TEST - VER 1.	All

Symptom:

INCOMPLETE POWER OPEN - TIME OUT

When Monitored and Set Condition:

INCOMPLETE POWER OPEN - TIME OUT

When Monitored: Anytime the Power Sliding Door is operating in an opening operation.

Set Condition: The power open operation was not completed within 20 seconds. This may be caused by very high opening effort. A weak hall effect signal, low motor output or defective clutch could also set this code.

POSSIBLE CAUSES
DTC PRESENT
BINDING DOOR
MOTOR/CLUTCH ASSEMBLY

TEST	ACTION	APPLICABILITY
1	With the DRBIII®, record and erase DTC's. Turn the ignition off, wait 10 seconds, then turn the ignition on. Operate the power sliding door several times if possible. With the DRBIII®, read ACTIVE DTCs. Does the DRBIII® display INCOMPLETE POWER OPEN - TIME-OUT? Yes → Go To 2 No → Using the wiring diagram/schematic as a guide, inspect the wiring and connectors for an intermittent condition. Operate the door several times and check for any binding conditions. Perform BODY VERIFICATION TEST - VER 1.	All
2	Examine the door for proper fit and alignment, loose/ hard or torn seals, worn teeth on the rack and gear (lower drive unit) or anything that would cause an obstruction to proper operation. Manually operate the sliding door of a known good vehicle and notice the effort needed. Compare the effort needed on the disabled vehicle. Does it take more effort to operate the door than it should? Yes → Refer to Service information for the related symptom(s). Perform BODY VERIFICATION TEST - VER 1. No → Replace the Motor/Clutch Assembly. Perform BODY VERIFICATION TEST - VER 1.	All

Symptom:
INCOMPLETE POWER OPEN - TRANSISTOR SHORTED

When Monitored and Set Condition:

INCOMPLETE POWER OPEN - TRANSISTOR SHORTED

When Monitored: Whenever the power sliding door is performing a power open operation.

Set Condition: The Power Sliding Door Module detects that the motor is rotating (monitors hall effect pulses) even though the controlled PWM rate is 0 percent. This DTC is set during the power open operation.

POSSIBLE CAUSES
DTC PRESENT
SLIDING DOOR MODULE SHORT TO GROUND
SLIDING DOOR OPEN DRIVER WIRE SHORT TO GROUND
SLIDING DOOR CLOSE DRIVER WIRE SHORT TO GROUND
POWER SLIDING DOOR MOTOR

TEST	ACTION	APPLICABILITY
1	With the DRBIII®, record and erase DTC's. Turn the ignition off, wait 10 seconds, then turn the ignition on. Operate the power sliding door several times if possible. With the DRBIII®, read ACTIVE DTCs. Does the DRBIII® display INCOMPLETE POWER OPEN - TRANSISTOR SHORTED? Yes → Go To 2 No → Using the wiring diagram/schematic as a guide, inspect the wiring and connectors for an intermittent condition. Operate the sliding door several times and check for any binding or poor door operation. Perform BODY VERIFICATION TEST - VER 1.	All
2	Turn the ignition off. Disconnect the Power Sliding Door Module C1 harness connector. Measure the resistance between ground and the Sliding Door Open Driver circuit. Is the resistance below 1000.0 ohms? Yes → Go To 3 No → Replace the Sliding Door Module. Perform BODY VERIFICATION TEST - VER 1.	All

INCOMPLETE POWER OPEN - TRANSISTOR SHORTED — Continued

TEST	ACTION	APPLICABILITY
3	Turn the ignition off. Disconnect the Power Sliding Door Module C1 harness connector. Disconnect the Sliding Door Motor connector. Measure the resistance between ground and the Sliding Door Open Driver circuit. Is the resistance below 1000.0 ohms? Yes → Repair the Sliding Door Open Driver wire for a short to ground. Perform BODY VERIFICATION TEST - VER 1. No → Go To 4	All
4	Turn the ignition off. Disconnect the Power Sliding Door Module C1 harness connector. Disconnect the Sliding Door Motor connector. Measure the resistance between ground and the Sliding Door Close Driver circuit. Is the resistance below 1000.0 ohms? Yes → Repair the Sliding Door Close Driver wire for a short to ground. Perform BODY VERIFICATION TEST - VER 1. No → Replace the Power Sliding Door Motor. Perform BODY VERIFICATION TEST - VER 1.	All

Symptom:

INCOMPLETE POWER OPEN - VOLTAGE BELOW MINIMUM LEVEL

When Monitored and Set Condition:

INCOMPLETE POWER OPEN - VOLTAGE BELOW MINIMUM LEVEL

When Monitored: Whenever the power sliding door is performing a power open operation.

Set Condition: The PSD Module detects that the voltage is below 9.5 volts during the power open operation.

POSSIBLE CAUSES
DTC PRESENT
MODULE VOLTAGE LOW
BINDING SLIDING DOOR
DRB OPERATING VOLTAGE LOW
POWER SLIDING DOOR MODULE - HIGH RESISTANCE
POWER SLIDING DOOR MOTOR

TEST	ACTION	APPLICABILITY
1	With the DRBIII®, record and erase DTC's. Turn the ignition off, wait 10 seconds, then turn the ignition on. Operate the power sliding door several times if possible. With the DRBIII®, read DTCs. Does the DRBIII® display INCOMPLETE POWER OPEN - VOLTAGE BELOW MINIMUM LEVEL? Yes → Go To 2 No → Using the wiring diagram/schematic as a guide, inspect the wiring and connectors for an intermittent condition. Operate the door several times and check for any binding conditions. Perform BODY VERIFICATION TEST - VER 1.	All
2	Examine the door for proper fit and alignment, loose/ hard or torn seals, worn teeth on the track and gear (lower drive unit) or anything that would cause an obstruction to proper operation. Manually operate the other sliding door or of a known good vehicle and notice the effort needed to open and close. Compare the effort needed on the disabled door. Does it take more effort to operate the sliding door than it should? Yes → Refer to Service information for the related symptom(s). Perform BODY VERIFICATION TEST - VER 1. No → Go To 3	All

INCOMPLETE POWER OPEN - VOLTAGE BELOW MINIMUM LEVEL — Continued

TEST	ACTION	APPLICABILITY
3	**NOTE: Test the battery to ensure it is fully charged and in good condition before proceeding.** Turn the ignition off. Turn all lights and accessories off. With the DRBIII® in ″Sliding Door″ ″Monitor Display″ ″PCI Bus Info″ read the ″Battery Voltage″ and compare it to the ″PSD Bat Volts Input″. **NOTE: If the difference is greater than 0.5 volts, backprobe the Fused B(+) at the module to verify.** Does the voltage vary more than 0.5 volts? Yes → Using the wiring diagram/schematic as a guide, inspect the wiring and connectors. Locate and repair the reason for the voltage drop. Perform BODY VERIFICATION TEST - VER 1. No → Go To 4	All
4	Turn the ignition off. Turn all lights and accessories off. With the DRBIII® in ″Sliding Door″ ″Monitor Display″ ″PCI Bus Info″ read the ″Battery Voltage″ and compare it to the ″PSD Bat Volts Input″. Operate the power sliding door and observe the voltage difference. **NOTE: If the difference is greater than 1.6 volts, backprobe the Fused B(+) at the module to verify.** Does the voltage vary more than 1.6 volts when the liftgate is operating?? Yes → Using the wiring diagram/schematic as a guide, inspect the wiring and connectors. Locate and repair the reason for the voltage drop. Perform BODY VERIFICATION TEST - VER 1. No → Go To 5	All
5	Turn the ignition off. Turn all lights and accessories off. Remove the sliding door trim panel to gain access to the Power Sliding Door Module. Backprobe voltmeter leads between the Fused B(+) and the Sliding Door Open Driver circuits in the PSD C1 connector. Close the sliding door. Operate the power sliding door in the OPEN position and observe the voltage difference. Does the voltage vary more than 0.2 volts when the sliding door is opening? Yes → Replace the Power Sliding Door Module. Perform BODY VERIFICATION TEST - VER 1. No → Go To 6	All
6	If there are no possible causes remaining, view repair. Repair Check the wiring and connections from the module to the motor for high resistance. If the wiring is okay, replace the Power Sliding Door Motor assembly. Perform BODY VERIFICATION TEST - VER 1.	All

Symptom:

IOD WAKE UP OPEN - PSD

When Monitored and Set Condition:

IOD WAKE UP OPEN - PSD

When Monitored: Anytime the Body Control Module is awake.

Set Condition: If the BCM does not sense a signal circuit from the Sliding Door Module this code will set.

POSSIBLE CAUSES
DTC PRESENT
BODY CONTROL MODULE - IOD WAKE UP OPEN
SLIDING DOOR WAKE UP SIGNAL WIRE OPEN
LIFTGATE MODULE WAKE UP SIGNAL WIRE SHORT TO GROUND
SLIDING DOOR WAKE UP SIGNAL WIRE SHORT TO GROUND
SLIDING DOOR MODULE - IOD WAKE UP OPEN

TEST	ACTION	APPLICABILITY
1	With the DRBIII®, record and erase DTC's. Turn the ignition off, wait 10 seconds, then turn the ignition on. Wait 10 seconds. With the DRBIII®, read DTCs. Does the DRBIII® display IOD WAKE UP OPEN? Yes → Go To 2 No → Using the wiring diagram/schematic as a guide, inspect the wiring and connectors for an intermittent condition. Perform BODY VERIFICATION TEST - VER 1.	All
2	Disconnect the BCM C3 connector. Measure the voltage between the appropriate Sliding Door Wake Up Signal circuit and ground. Is the voltage above 10.0 volts? Yes → Replace the Body Control Module. Perform BODY VERIFICATION TEST - VER 1. No → Go To 3	All

IOD WAKE UP OPEN - PSD — Continued

TEST	ACTION	APPLICABILITY
3	Disconnect the Body Control Module C3 connector. Disconnect the appropriate Sliding Door Control Module C2 connector. Measure the resistance of the appropriate Sliding Door Wake Up Signal circuit between the BCM C3 connector and the Sliding Door Control Module C2 connector. Is the resistance below 5.0 ohms? Yes → Go To 4 No → Repair the appropriate Sliding Door Wake Up Signal wire for an open. Perform BODY VERIFICATION TEST - VER 1.	All
4	Disconnect the Body Control Module C2 connector. Disconnect the Power Liftgate Module C2 connector. Measure the resistance between the Liftgate Module Wake Up Signal circuit and ground. Is the resistance below 100.0 ohms? Yes → Repair the Liftgate Module Wake Up Signal wire for a short to ground. Perform BODY VERIFICATION TEST - VER 1. No → Go To 5	All
5	**NOTE: If this vehicle is equipped with 2 power sliding doors, this test must be repeated for each door.** Disconnect the Body Control Module C3 connector. Disconnect the appropriate Sliding Door Control Module C2 connector. Measure the resistance between the appropriate Sliding Door Wake Up Signal circuit and ground. Is the resistance below 100.0 ohms? Yes → Repair the appropriate Sliding Door Wake Up Signal wire for a short to ground. Perform BODY VERIFICATION TEST - VER 1. No → Go To 6	All
6	If there are no possible causes remaining, view repair. Repair Replace the Sliding Door Module. Perform BODY VERIFICATION TEST - VER 1.	All

Symptom:

IOD WAKE UP PSD & PLG SHORT

When Monitored and Set Condition:

IOD WAKE UP PSD & PLG SHORT

When Monitored: Anytime the Body Control Module is awake.

Set Condition: If the BCM senses an over current signal on any of the Wake Up Signal circuits this code will set.

POSSIBLE CAUSES
DTC PRESENT
BODY CONTROL MODULE - IOD WAKE UP SHORT
LEFT SLIDING DOOR WAKE UP SIGNAL WIRE SHORT TO VOLTAGE
LIFTGATE MODULE WAKE UP SIGNAL WIRE SHORT TO VOLTAGE
RIGHT SLIDING DOOR WAKE UP SIGNAL WIRE SHORT TO VOLTAGE
LEFT SLIDING DOOR MODULE - IOD WAKE UP SHORT TO VOLTAGE
POWER LIFTGATE MODULE - IOD WAKE UP SHORT TO VOLTAGE
RIGHT SLIDING DOOR MODULE - IOD WAKE UP SHORT TO VOLTAGE

TEST	ACTION	APPLICABILITY
1	With the DRBIII®, record and erase DTC's. Turn the ignition off, wait 1 minute then turn the ignition on. Wait 10 seconds. With the DRBIII®, read DTCs. Does the DRBIII® display IOD WAKE UP SHORT? Yes → Go To 2 No → Using the wiring diagram/schematic as a guide, inspect the wiring and connectors for an intermittent condition. Perform BODY VERIFICATION TEST - VER 1.	All
2	Disconnect the BCM C2 and C3 connectors. Using a 12-volt test light connected to ground, check each Wake Up Signal circuit. On which circuit did the test light illuminate? Left Sliding Door Wake Up Signal. Go To 3 Right Sliding Door Wake Up Signal. Go To 4 Liftgate Module Wake Up Signal. Go To 5 Did not illuminate. Replace the Body Control Module. Perform BODY VERIFICATION TEST - VER 1.	All

IOD WAKE UP PSD & PLG SHORT — Continued

TEST	ACTION	APPLICABILITY
3	Disconnect the Body Control Module C3 connector. Disconnect the Left Sliding Door Control Module C2 connector. Measure the voltage between the Left Sliding Door Wake Up Signal circuit and ground. Is there any voltage present? Yes → Repair the Left Sliding Door Wake Up Signal wire for a short to voltage. Perform BODY VERIFICATION TEST - VER 1. No → Replace the Sliding Door Module. Perform BODY VERIFICATION TEST - VER 1.	All
4	Disconnect the Body Control Module C3 connector. Disconnect the Right Sliding Door Control Module C2 connector. Measure the voltage between the Right Sliding Door Wake Up Signal circuit and ground. Is there any voltage present? Yes → Repair the Right Sliding Door Wake Up Signal wire for a short to voltage. Perform BODY VERIFICATION TEST - VER 1. No → Replace the Sliding Door Module. Perform BODY VERIFICATION TEST - VER 1.	All
5	Disconnect the Body Control Module C2 connector. Disconnect the Power Liftgate Module C2 connector. Measure the voltage between the Liftgate Module Wake Up Signal circuit and ground. Is there any voltage present? Yes → Repair the Liftgate Module Wake Up Signal wire for a short to voltage. Perform BODY VERIFICATION TEST - VER 1. No → Replace the Power Liftgate Module. Perform BODY VERIFICATION TEST - VER 1.	All

Symptom:

LEFT B-PILLAR SWITCH INPUT OPEN/SHORT TO VOLTAGE - BCM

When Monitored and Set Condition:

LEFT B-PILLAR SWITCH INPUT OPEN/SHORT TO VOLTAGE - BCM

When Monitored: Continuously when the BCM is awake.

Set Condition: When the BCM senses an input greater than 4.8 volts for over 10 seconds.

POSSIBLE CAUSES
DTC PRESENT
LEFT SLIDING DOOR PILLAR SWITCH MUX CIRCUIT SHORT TO VOLTAGE
GROUND CIRCUIT OPEN
LEFT SLIDING DOOR PILLAR SWITCH MUX WIRE OPEN
LEFT B-PILLAR SWITCH OPEN
BODY CONTROL MODULE - LEFT SLIDING DOOR PILLAR SWITCH OPEN

TEST	ACTION	APPLICABILITY
1	With the DRBIII®, record and erase DTC's. Turn the ignition off, wait 10 seconds, then turn the ignition on. Operate the left power sliding door from the Left B-Pillar Switch. With the DRBIII®, read DTCs. Does the DRBIII® display LEFT B-PILLAR SWITCH INPUT OPEN OR SHORT TO VOLTAGE? Yes → Go To 2 No → Using the wiring diagram/schematic as a guide, inspect the wiring and connectors for an intermittent condition. Perform BODY VERIFICATION TEST - VER 1.	All
2	Disconnect the Body Control Module C3 connector. Measure the voltage between Left Sliding Door Pillar Switch Mux circuit and ground. Is there any voltage present? Yes → Repair the Left Sliding Door Pillar Switch Mux circuit for a short to voltage. Perform BODY VERIFICATION TEST - VER 1. No → Go To 3	All
3	Disconnect the Body Control Module C3 connector. Measure the resistance between Left Sliding Door Pillar Switch Mux circuit and ground. Is the resistance below 20500.0 ohms? Yes → Replace the Body Control Module. Perform BODY VERIFICATION TEST - VER 1. No → Go To 4	All

LEFT B-PILLAR SWITCH INPUT OPEN/SHORT TO VOLTAGE - BCM — Continued

TEST	ACTION	APPLICABILITY
4	Disconnect the B-Pillar Switch connector. Using a 12-volt test light connected to 12-volts, check the Ground circuit in the B-Pillar Switch connector. Does the test light illuminate brightly? Yes → Go To 5 No → Repair the Ground circuit for an open. Perform BODY VERIFICATION TEST - VER 1.	All
5	Disconnect the Body Control Module C3 connector. Disconnect the Left B-Pillar Switch connector. Measure the resistance of the Left Sliding Door Pillar Switch Mux circuit between the BCM C3 connector and the Left B-Pillar Switch connector. Is the resistance below 5.0 ohms? Yes → Go To 6 No → Repair the Left Sliding Door Pillar Switch Mux wire for an open. Perform BODY VERIFICATION TEST - VER 1.	All
6	If there are no possible causes remaining, view repair. Repair Replace the B-Pillar Switch. Perform BODY VERIFICATION TEST - VER 1.	All

Symptom:

LEFT B-PILLAR SWITCH INPUT SHORT - BCM

When Monitored and Set Condition:

LEFT B-PILLAR SWITCH INPUT SHORT - BCM

When Monitored: Continuously when the BCM is awake.

Set Condition: When the BCM senses a B-pillar switch input less than .24 volts for over 10 seconds.

POSSIBLE CAUSES
DTC PRESENT
LEFT B-PILLAR SWITCH SHORTED
LEFT SLIDING DOOR PILLAR SWITCH MUX WIRE SHORT TO GROUND
BODY CONTROL MODULE - LEFT SLIDING DOOR PILLAR SWITCH CIRCUIT SHORTED

TEST	ACTION	APPLICABILITY
1	With the DRBIII®, record and erase DTC's. Turn the ignition off, wait 10 seconds, then turn the ignition on. Operate the left power sliding door from the Left B-Pillar Switch. With the DRBIII®, read DTCs. Does the DRBIII® display LEFT B-PILLAR SWITCH INPUT SHORT? Yes → Go To 2 No → Using the wiring diagram/schematic as a guide, inspect the wiring and connectors for an intermittent condition. Perform BODY VERIFICATION TEST - VER 1.	All
2	Disconnect the Left B-Pillar Switch connector. With the DRBIII®, erase DTCs. Turn the ignition off, wait 10 seconds, then turn the ignition on. Wait 10 seconds. With the DRBIII®, read DTCs. Does the DRBIII® display LEFT B-PILLAR SWITCH INPUT OPEN? Yes → Replace the B-Pillar Switch. Perform BODY VERIFICATION TEST - VER 1. No → Go To 3	All
3	Disconnect the Body Control Module C3 connector. Disconnect the Left B-Pillar Switch connector. Measure the resistance of the Left Sliding Door Pillar Switch Mux circuit to ground. Is the resistance below 1000.0 ohms? Yes → Repair the Left Sliding Door Pillar Switch Mux wire for a short to ground. Perform BODY VERIFICATION TEST - VER 1. No → Replace the Body Control Module. Perform BODY VERIFICATION TEST - VER 1.	All

Symptom:

LEFT B-PILLAR SWITCH INPUT STUCK - BCM

When Monitored and Set Condition:

LEFT B-PILLAR SWITCH INPUT STUCK - BCM

When Monitored: Continuously when the BCM is awake.

Set Condition: When the BCM senses an active B-pillar switch input for over 10 seconds.

POSSIBLE CAUSES
DTC PRESENT
LEFT B-PILLAR SWITCH SHORTED
LEFT SLIDING DOOR PILLAR SWITCH MUX WIRE SHORT TO GROUND
BODY CONTROL MODULE - LEFT SLIDING DOOR PILLAR SWITCH CIRCUIT SHORTED

TEST	ACTION	APPLICABILITY
1	With the DRBIII®, record and erase DTC's. Turn the ignition off, wait 10 seconds, then turn the ignition on. Operate the left power sliding door from the Left B-Pillar Switch. With the DRBIII®, read DTCs. Does the DRBIII® display LEFT B-PILLAR SWITCH INPUT STUCK? Yes → Go To 2 No → Using the wiring diagram/schematic as a guide, inspect the wiring and connectors for an intermittent condition. Perform BODY VERIFICATION TEST - VER 1.	All
2	Disconnect the Left B-Pillar Switch connector. With the DRBIII®, erase DTCs. Turn the ignition off, wait 10 seconds, then turn the ignition on. Wait 10 seconds. With the DRBIII®, read DTCs. Does the DRBIII® display LEFT B-PILLAR SWITCH INPUT OPEN? Yes → Replace the B-Pillar Switch. Perform BODY VERIFICATION TEST - VER 1. No → Go To 3	All
3	Disconnect the Body Control Module C3 connector. Disconnect the Left B-Pillar Switch connector. Measure the resistance of the Left Sliding Door Pillar Switch Mux circuit to ground. Is the resistance below 10000.0 ohms? Yes → Repair the Left Sliding Door Pillar Switch Mux wire for a short to ground. Perform BODY VERIFICATION TEST - VER 1. No → Replace the Body Control Module. Perform BODY VERIFICATION TEST - VER 1.	All

Symptom:

LOOPBACK TEST FAILURE

When Monitored and Set Condition:

LOOPBACK TEST FAILURE

When Monitored: Anytime the Power Sliding Door Module is awake.

Set Condition: The Power Sliding Door Module did not receive its own transmitted message on the PCI bus back (loopback) for longer than 1 second.

POSSIBLE CAUSES
DTC PRESENT
POWER SLIDING DOOR MODULE

TEST	ACTION	APPLICABILITY
1	With the DRBIII®, record and erase DTC's. Turn the ignition off, wait 10 seconds, then turn the ignition on. Operate the power sliding door several times from stop to stop if possible. With the DRBIII®, read ACTIVE DTCs. Does the DRBIII® display LOOPBACK TEST FAILURE? Yes → Replace the Power Sliding Door Module. Perform BODY VERIFICATION TEST - VER 1. No → Using the wiring diagram/schematic as a guide, inspect the wiring and connectors for an intermittent condition. Operate the door several times and check for any binding conditions. Perform BODY VERIFICATION TEST - VER 1.	All

Symptom:

LOSS OF BCM MESSAGES

When Monitored and Set Condition:

LOSS OF BCM MESSAGES

When Monitored: Whenever the ignition is on.

Set Condition: If the PSD Module losses communication with the BCM for over 5 seconds, this code will set.

POSSIBLE CAUSES
ATTEMPT TO COMMUNICATE WITH THE BODY CONTROL MODULE
POWER SLIDING DOOR MODULE - LOSS OF BCM MESSAGES

TEST	ACTION	APPLICABILITY
1	Turn the ignition on. With the DRBIII®, enter Body then Body Computer. Was the DRBIII® able to I/D or communicate with the BCM? Yes → Go To 2 No → Refer to the Communication category for the related symptom(s).	All
2	With the DRBIII®, erase DTC's. Cycle the ignition switch from off to on and wait approximately 1 minute. With the DRBIII®, read DTC's. Did this DTC reset? Yes → Replace the Power Sliding Door Module. Perform BODY VERIFICATION TEST - VER 1. No → Test Complete.	All

Symptom:

LOSS OF EATX MESSAGES

When Monitored and Set Condition:

LOSS OF EATX MESSAGES

When Monitored: Whenever the ignition is on.

Set Condition: If the PSD Module does not receive a PRNDL message for over 5 seconds, this code will set.

POSSIBLE CAUSES
ATTEMPT TO COMMUNICATE WITH THE TRANSMISSION CONTROL MODULE
POWER SLIDING DOOR MODULE - LOSS OF EATX MESSAGES

TEST	ACTION	APPLICABILITY
1	Turn the ignition on. With the DRBIII®, select Transmission. Was the DRBIII® able to I/D or communicate with the Transmission? Yes → Go To 2 No → Refer to the Communication category for the related symptom(s).	All
2	With the DRBIII®, erase DTC's. Cycle the ignition switch from off to on and wait approximately 1 minute. With the DRBIII®, read DTC's. Did this DTC reset? Yes → Replace the Power Sliding Door Module. Perform BODY VERIFICATION TEST - VER 1. No → Test Complete.	All

Symptom:

LOSS OF FCM MESSAGES

When Monitored and Set Condition:

LOSS OF FCM MESSAGES

When Monitored: Whenever the ignition is in the RUN position and the PRNDL is not in PARK position.

Set Condition: If the PSD Module does not receive a temperature message from the Front Control Module for over 5 seconds, this code will set.

POSSIBLE CAUSES
ATTEMPT TO COMMUNICATE WITH THE FRONT CONTROL MODULE
POWER SLIDING DOOR MODULE - LOSS OF FCM MESSAGES

TEST	ACTION	APPLICABILITY
1	Turn the ignition on. With the DRBIII®, enter Body then Front Control Module. Was the DRBIII® able to I/D or communicate with the FCM? Yes → Go To 2 No → Refer to the Communication category for the related symptom(S).	All
2	With the DRBIII®, erase DTC's. Cycle the ignition switch from off to on and wait approximately 1 minute. With the DRBIII®, read DTC's. Did this DTC reset? Yes → Replace the Power Sliding Door Module. Perform BODY VERIFICATION TEST - VER 1. No → Test Complete.	All

Symptom:

LOSS OF SBEC MESSAGES

When Monitored and Set Condition:

LOSS OF SBEC MESSAGES

When Monitored: Whenever the ignition is in RUN position and the PRNDL is not in PARK position.

Set Condition: If the PSD Module does not receive a speed message from the Powertrain Control Module for over 5 seconds, this code will set.

POSSIBLE CAUSES
ATTEMPT TO COMMUNICATE WITH THE POWERTRAIN CONTROL MODULE
POWER SLIDING DOOR MODULE - LOSS OF SBEC MESSAGES

TEST	ACTION	APPLICABILITY
1	Turn the ignition on. With the DRBIII®, select Engine. Was the DRBIII® able to I/D or communicate with the Transmission? Yes → Go To 2 No → Refer to the Communication category for the related symptom(s).	All
2	With the DRBIII®, erase DTC's. Cycle the ignition switch from OFF to RUN and wait approximately 1 minute. With the DRBIII®, read DTC's. Did this DTC reset? Yes → Replace the Power Sliding Door Module. Perform BODY VERIFICATION TEST - VER 1. No → Test Complete.	All

Symptom:

OVERHEAD LEFT SWITCH INPUT STUCK - BCM

When Monitored and Set Condition:

OVERHEAD LEFT SWITCH INPUT STUCK - BCM

When Monitored: Continuously when the BCM is awake.

Set Condition: When the BCM senses an active switch input for over 10 seconds.

POSSIBLE CAUSES
DTC PRESENT
OVERHEAD LEFT SWITCH SHORTED
SLIDING DOORS OVERHEAD SWITCH MUX WIRE SHORT TO GROUND
BODY CONTROL MODULE - SLIDING DOORS OVERHEAD SWITCH CIRCUIT SHORTED

TEST	ACTION	APPLICABILITY
1	With the DRBIII®, record and erase DTC's. Turn the ignition off, wait 10 seconds, then turn the ignition on. Operate the left power sliding door from the Overhead Console Switch. With the DRBIII®, read DTCs. Does the DRBIII® display OVERHEAD LEFT SWITCH INPUT STUCK? Yes → Go To 2 No → Using the wiring diagram/schematic as a guide, inspect the wiring and connectors for an intermittent condition. Perform BODY VERIFICATION TEST - VER 1.	All
2	Disconnect the Overhead Console connector. With the DRBIII®, erase DTCs. Turn the ignition off, wait 10 seconds, then turn the ignition on. Wait 10 seconds. With the DRBIII®, read DTCs. Does the DRBIII® display OVERHEAD LEFT SWITCH INPUT STUCK? Yes → Go To 3 No → Replace the Power Sliding Door Button Module. Perform BODY VERIFICATION TEST - VER 1.	All
3	Disconnect the Body Control Module C3 connector. Disconnect the Overhead Console Switch connector. Measure the resistance of the Sliding Doors Overhead Switch Mux circuit to ground. Is the resistance below 10000.0 ohms? Yes → Repair the Sliding Doors Overhead Switch Mux wire for a short to ground. Perform BODY VERIFICATION TEST - VER 1. No → Replace the Body Control Module. Perform BODY VERIFICATION TEST - VER 1.	All

Symptom:

OVERHEAD RIGHT SWITCH INPUT STUCK - BCM

When Monitored and Set Condition:

OVERHEAD RIGHT SWITCH INPUT STUCK - BCM

When Monitored: Continuously when the BCM is awake.

Set Condition: When the BCM senses an active switch input for over 10 seconds.

POSSIBLE CAUSES
DTC PRESENT
OVERHEAD RIGHT SWITCH SHORTED
SLIDING DOORS OVERHEAD SWITCH MUX WIRE SHORT TO GROUND
BODY CONTROL MODULE - SLIDING DOORS OVERHEAD SWITCH CIRCUIT SHORTED

TEST	ACTION	APPLICABILITY
1	With the DRBIII®, record and erase DTC's. Turn the ignition off, wait 10 seconds, then turn the ignition on. Operate the right power sliding door from the Overhead Console Switch. With the DRBIII®, read DTCs. Does the DRBIII® display OVERHEAD RIGHT SWITCH INPUT STUCK? Yes → Go To 2 No → Using the wiring diagram/schematic as a guide, inspect the wiring and connectors for an intermittent condition. Perform BODY VERIFICATION TEST - VER 1.	All
2	Disconnect the Overhead Console Switch connector. Turn the ignition off, wait 10 seconds, then turn the ignition on. Wait 10 seconds. With the DRBIII®, read DTCs. Does the DRBIII® display OVERHEAD RIGHT SWITCH INPUT STUCK? No → Replace the Power Sliding Door Button Module. Perform BODY VERIFICATION TEST - VER 1. Yes → Go To 3	All
3	Disconnect the Body Control Module C3 connector. Disconnect the Overhead Console Switch connector. Measure the resistance of the Sliding Doors Overhead Switch Mux circuit to ground. Is the resistance below 2000.0 ohms? Yes → Repair the Sliding Doors Overhead Switch Mux wire for a short to ground. Perform BODY VERIFICATION TEST - VER 1. No → Replace the Body Control Module. Perform BODY VERIFICATION TEST - VER 1.	All

Symptom:
OVERHEAD RIGHT/LEFT SWITCHES SHORT - BCM

When Monitored and Set Condition:

OVERHEAD RIGHT/LEFT SWITCHES SHORT - BCM

When Monitored: Continuously when the BCM is awake.

Set Condition: When the BCM senses less than 1.0 volts on the Sliding Doors Overhead Switch Mux circuit for over 10 seconds.

POSSIBLE CAUSES
DTC PRESENT
OVERHEAD SWITCH SHORTED
SLIDING DOORS OVERHEAD SWITCH MUX WIRE SHORT TO GROUND
BODY CONTROL MODULE - SLIDING DOORS OVERHEAD SWITCH INPUT SHORTED

TEST	ACTION	APPLICABILITY
1	With the DRBIII®, record and erase DTC's. Turn the ignition off, wait 10 seconds, then turn the ignition on. Operate the power sliding door from the Overhead Console Switch. With the DRBIII®, read DTCs. Does the DRBIII® display OVERHEAD RIGHT/LEFT SWITCHES SHORT? Yes → Go To 2 No → Using the wiring diagram/schematic as a guide, inspect the wiring and connectors for an intermittent condition. Perform BODY VERIFICATION TEST - VER 1.	All
2	Disconnect the Overhead Console Switch connector. Turn the ignition off, wait 10 seconds, then turn the ignition on. Wait 10 seconds. With the DRBIII®, read DTCs. Does the DRBIII® display OVERHEAD SWITCH #2 INPUT SHORT? No → Replace the Power Sliding Door Button Module. Perform BODY VERIFICATION TEST - VER 1. Yes → Go To 3	All
3	Disconnect the Body Control Module C3 connector. Disconnect the Overhead Console Switch connector. Measure the resistance of the Sliding Doors Overhead Switch Mux circuit to ground. Is the resistance below 100.0 ohms? Yes → Repair the Sliding Doors Overhead Switch Mux wire for a short to ground. Perform BODY VERIFICATION TEST - VER 1. No → Replace the Body Control Module. Perform BODY VERIFICATION TEST - VER 1.	All

Symptom:

RIGHT B-PILLAR SWITCH INPUT OPEN OR SHORT TO VOLTAGE - BCM

When Monitored and Set Condition:

RIGHT B-PILLAR SWITCH INPUT OPEN OR SHORT TO VOLTAGE - BCM

When Monitored: Continuously when the BCM is awake.

Set Condition: When the BCM senses an input greater than 4.8 volts for over 10 seconds.

POSSIBLE CAUSES
DTC PRESENT
RIGHT SLIDING DOOR PILLAR SWITCH MUX CIRCUIT SHORT TO VOLTAGE
GROUND CIRCUIT OPEN
RIGHT SLIDING DOOR PILLAR SWITCH MUX WIRE OPEN
RIGHT B-PILLAR SWITCH OPEN
BODY CONTROL MODULE - RIGHT SLIDING DOOR PILLAR SWITCH OPEN

TEST	ACTION	APPLICABILITY
1	With the DRBIII®, record and erase DTC's. Turn the ignition off, wait 10 seconds, then turn the ignition on. Operate the right power sliding door from the Right B-Pillar Switch. With the DRBIII®, read DTCs. Does the DRBIII® display RIGHT B-PILLAR SWITCH INPUT OPEN? Yes → Go To 2 No → Using the wiring diagram/schematic as a guide, inspect the wiring and connectors for an intermittent condition. Perform BODY VERIFICATION TEST - VER 1.	All
2	Disconnect the Body Control Module C3 connector. Measure the voltage between Right Sliding Door Pillar Switch Mux circuit and ground. Is there any voltage present? Yes → Repair the Right Sliding Door Pillar Switch Mux circuit for a short to voltage. Perform BODY VERIFICATION TEST - VER 1. No → Go To 3	All
3	Disconnect the B-Pillar Switch connector. Using a 12-volt test light connected to 12-volts, check the Ground circuit in the B-Pillar Switch connector. Does the test light illuminate brightly? Yes → Go To 4 No → Repair the Ground circuit for an open. Perform BODY VERIFICATION TEST - VER 1.	All

RIGHT B-PILLAR SWITCH INPUT OPEN OR SHORT TO VOLTAGE - BCM — Continued

TEST	ACTION	APPLICABILITY
4	Disconnect the Body Control Module C3 connector. Disconnect the Right B-Pillar Switch connector. Measure the resistance of the Right Sliding Door Pillar Switch Mux circuit between the BCM C3 connector and the Right B-Pillar Switch connector. Is the resistance below 5.0 ohms? Yes → Go To 5 No → Repair the Right Sliding Door Pillar Switch Mux wire for an open. Perform BODY VERIFICATION TEST - VER 1.	All
5	Disconnect the Body Control Module C3 connector. Measure the resistance between Right Sliding Door Pillar Switch Mux circuit and ground. Is the resistance below 20500.0 ohms? Yes → Replace the Body Control Module. Perform BODY VERIFICATION TEST - VER 1. No → Go To 6	All
6	If there are no possible causes remaining, view repair. Repair Replace the B-Pillar Switch. Perform BODY VERIFICATION TEST - VER 1.	All

Symptom:

RIGHT B-PILLAR SWITCH INPUT SHORT - BCM

When Monitored and Set Condition:

RIGHT B-PILLAR SWITCH INPUT SHORT - BCM

When Monitored: Continuously when the BCM is awake.

Set Condition: When the BCM senses a switch input less than .24 volts for over 10 seconds.

POSSIBLE CAUSES
DTC PRESENT
RIGHT B-PILLAR SWITCH SHORTED
RIGHT SLIDING DOOR PILLAR SWITCH MUX WIRE SHORT TO GROUND
BODY CONTROL MODULE - RIGHT SLIDING DOOR PILLAR SWITCH CIRCUIT SHORTED

TEST	ACTION	APPLICABILITY
1	With the DRBIII®, record and erase DTC's. Turn the ignition off, wait 10 seconds, then turn the ignition on. Operate the right power sliding door from the Right B-Pillar Switch. With the DRBIII®, read DTCs. Does the DRBIII® display RIGHT B-PILLAR SWITCH INPUT SHORT? Yes → Go To 2 No → Using the wiring diagram/schematic as a guide, inspect the wiring and connectors for an intermittent condition. Perform BODY VERIFICATION TEST - VER 1.	All
2	Disconnect the Right B-Pillar Switch connector. With the DRBIII®, erase DTCs. Turn the ignition off, wait 10 seconds, then turn the ignition on. Wait 10 seconds. With the DRBIII®, read DTCs. Does the DRBIII® display RIGHT B-PILLAR SWITCH INPUT OPEN? Yes → Replace the B-Pillar Switch. Perform BODY VERIFICATION TEST - VER 1. No → Go To 3	All
3	Disconnect the Body Control Module C3 connector. Disconnect the Right B-Pillar Switch connector. Measure the resistance of the Right Sliding Door Pillar Switch Mux circuit to ground. Is the resistance below 1000.0 ohms? Yes → Repair the Right Sliding Door Pillar Switch Mux wire for a short to ground. Perform BODY VERIFICATION TEST - VER 1. No → Replace the Body Control Module. Perform BODY VERIFICATION TEST - VER 1.	All

Symptom:

RIGHT B-PILLAR SWITCH INPUT STUCK - BCM

When Monitored and Set Condition:

RIGHT B-PILLAR SWITCH INPUT STUCK - BCM

When Monitored: Continuously when the BCM is awake.

Set Condition: When the BCM senses an active switch input for over 10 seconds.

POSSIBLE CAUSES
DTC PRESENT
RIGHT B-PILLAR SWITCH SHORTED
RIGHT SLIDING DOOR PILLAR SWITCH MUX WIRE SHORT TO GROUND
BODY CONTROL MODULE - RIGHT SLIDING DOOR PILLAR SWITCH CIRCUIT SHORTED

TEST	ACTION	APPLICABILITY
1	With the DRBIII®, record and erase DTC's. Turn the ignition off, wait 10 seconds, then turn the ignition on. Operate the right power sliding door from the Right B-Pillar Switch. With the DRBIII®, read DTCs. Does the DRBIII® display RIGHT B-PILLAR SWITCH INPUT STUCK? Yes → Go To 2 No → Using the wiring diagram/schematic as a guide, inspect the wiring and connectors for an intermittent condition. Perform BODY VERIFICATION TEST - VER 1.	All
2	Disconnect the Right B-Pillar Switch connector. With the DRBIII®, read DTCs. Does the DRBIII® display RIGHT B-PILLAR SWITCH INPUT OPEN? Yes → Replace the B-Pillar Switch. Perform BODY VERIFICATION TEST - VER 1. No → Go To 3	All
3	Disconnect the Body Control Module C3 connector. Disconnect the Right B-Pillar Switch connector. Measure the resistance of the Right Sliding Door Pillar Switch Mux circuit to ground. Is the resistance below 10000.0 ohms? Yes → Repair the Right Sliding Door Pillar Switch Mux wire for a short to ground. Perform BODY VERIFICATION TEST - VER 1. No → Replace the Body Control Module. Perform BODY VERIFICATION TEST - VER 1.	All

Symptom:

***POWER SLIDING DOOR INOPERATIVE**

POSSIBLE CAUSES
DTC'S PRESENT
MODULE RESPONSE
INTERMITTENT PROBLEM
SYSTEM TESTS

TEST	ACTION	APPLICABILITY
1	With the DRBIII® check for response from the Body Computer and the Power Sliding Door Modules Is there response from both modules? Yes → Go To 2 No → Refer to symptom list for problems related to COMMUNICATION.	All
2	With the DRBIII®, read DTCs in POWER SLIDING DOOR and BODY COMPUTER. Are any Power Sliding Door related codes present? Yes → Refer to symptom list for problems related to POWER SLIDING DOORS. No → Go To 3	All
3	This test will determine what inhibited the Power Sliding Door from operating properly. With the DRBIII®, select POWER SLIDING DOOR, MISCELLANEOUS, LAST INHIBIT MONITOR. Does the DRBIII® display any INHIBIT REASONS? Yes → Check for any binding conditions or other restrictions that may prevent proper operation. Using the wiring diagram/schematic as a guide, inspect the wiring and connectors. No → Go To 4	All
4	Ensure the sliding door is fully closed before proceeding. With the DRBIII® select SYSTEM TEST. Perform the Open, Close, Latch Cinch, Latch Release and Relay tests. Did any test fail? Yes → Using the wiring diagram/schematic as a guide, inspect the wiring and connectors. No → Test Complete.	All

Symptom:

FOLD MIRROR OUTPUT FAILURE (EXPORT ONLY)

POSSIBLE CAUSES
INTERMITTENT CONDITION
LEFT POWER MIRROR
RIGHT POWER MIRROR
LEFT FOLDING MIRROR UNFOLD DRIVER SHORT TO VOLTAGE
RIGHT FOLDING MIRROR UNFOLD DRIVER SHORT TO VOLTAGE
LEFT FOLDING MIRROR UNFOLD DRIVER SHORT TO GROUND
RIGHT FOLDING MIRROR UNFOLD DRIVER SHORT TO GROUND
BODY CONTROL MODULE

TEST	ACTION	APPLICABILITY
1	With the DRBIII®, record and erase DTC's. NOTE: Doors must be closed to allow the mirrors to fold with the power folding mirror switch. Attempt to operate the power folding mirror system with the power folding mirror switch and by opening and closing both front doors with mirrors folded. With the DRBIII®, read DTCs. Does the same DTC reset? Yes → Go To 2 No → The condition that caused this DTC is currently not present. Use the wiring diagram/schematic as a guide, and inspect the related wiring harness for a possible intermittent condition. Perform BODY VERIFICATION TEST - VER 1.	All
2	Disconnect the Left Power Mirror connector. NOTE: Check connectors - Clean/repair as necessary. With the DRBIII®, erase DTC's. Operate the Power Folding Mirror switch. With the DRBIII®, read DTCs. Does the same DTC reset? Yes → Go To 3 No → Replace the Left Power Mirror. Perform BODY VERIFICATION TEST - VER 1.	All
3	Disconnect the Right Power Mirror connector. NOTE: Check connectors - Clean/repair as necessary. With the DRBIII®, erase DTC's. Operate the Power Folding Mirror switch. With the DRBIII®, read DTCs. Does the same DTC reset? Yes → Go To 4 No → Replace the Right Power Mirror. Perform BODY VERIFICATION TEST - VER 1.	All

FOLD MIRROR OUTPUT FAILURE (EXPORT ONLY) — Continued

TEST	ACTION	APPLICABILITY
4	Disconnect the Left and Right Power Mirror connectors. Disconnect the Body Control Module C2 connector. NOTE: Check connectors - Clean/repair as necessary. Measure for unwanted voltage on the Left Folding Mirror Unfold Driver circuit in the BCM C2 connector. Is there any voltage present? Yes → Repair the Left Folding Mirror Unfold Driver circuit for a short to voltage. Perform BODY VERIFICATION TEST - VER 1. No → Go To 5	All
5	Disconnect the Left and Right Power Mirror connectors. Disconnect the Body Control Module C2 connector. NOTE: Check connectors - Clean/repair as necessary. Measure for unwanted voltage on the Right Folding Mirror Unfold Driver circuit in the relay connector. Is there any voltage present? Yes → Repair the Right Folding Mirror Unfold Driver circuit for a short to voltage. Perform BODY VERIFICATION TEST - VER 1. No → Go To 6	All
6	Disconnect the Left and Right Power Mirror connectors. Disconnect the Body Control Module C2 connector. NOTE: Check connectors - Clean/repair as necessary. Measure the resistance between ground and the Left Folding Mirror Unfold Driver circuit in the BCM C2 connector. Is the resistance below 5.0 ohms? Yes → Repair the Left Folding Mirror Unfold Driver circuit for a short to ground. Perform BODY VERIFICATION TEST - VER 1. No → Go To 7	All
7	Disconnect the Left and Right Power Mirror connectors. Disconnect the Body Control Module C2 connector. NOTE: Check connectors - Clean/repair as necessary. Measure the resistance between ground and the Right Folding Mirror Unfold Driver circuit in the relay connector. Is the resistance below 5.0 ohms? Yes → Repair the Right Folding Mirror Unfold Driver circuit for a short to ground. Perform BODY VERIFICATION TEST - VER 1. No → Replace the Body Control Module. Perform BODY VERIFICATION TEST - VER 1.	All

Symptom:

PASSENGER MIRROR RELAY OUTPUT OPEN (EXPORT ONLY)

POSSIBLE CAUSES
INTERMITTENT CONDITION
FUSED B+ CIRCUIT OPEN
PASSENGER FOLDING MIRROR RELAY
PASSENGER FOLDING MIRROR RELAY CONTROL CIRCUIT SHORTED TO GROUND
PASSENGER FOLDING MIRROR RELAY CONTROL CIRCUIT OPEN
BODY CONTROL MODULE

TEST	ACTION	APPLICABILITY
1	With the DRBIII®, record and erase DTC's. NOTE: Doors must be closed to allow the mirrors to fold with the power folding mirror switch. Attempt to operate the power folding mirror system with the power folding mirror switch and by opening and closing both front doors with mirrors folded. With the DRBIII®, read DTCs. Does the same DTC reset? Yes → Go To 2 No → The condition that caused this DTC is currently not present. Use the wiring diagram/schematic as a guide, and inspect the related wiring harness for a possible intermittent condition. Perform BODY VERIFICATION TEST - VER 1.	All
2	Disconnect the Passenger Folding Mirror Relay connector. NOTE: Check connectors - Clean/repair as necessary. Using a 12-volt test light connected to ground, check the Fused B+ circuit in the relay connector. The test light must illuminate brightly. Compare the brightness to that of a direct connection to the battery. Does the test light illuminate brightly? Yes → Go To 3 No → Repair the Fused B+ circuit for an open. Perform BODY VERIFICATION TEST - VER 1.	All
3	Remove the Passenger Folding Mirror Relay. Check connectors - Clean/repair as necessary. Install a substitute relay in place of the Passenger Folding Mirror Relay. With the DRBIII®, erase DTC's. NOTE: Doors must be closed to allow the mirrors to fold with the power folding mirror switch. Attempt to operate the power folding mirror system with the power folding mirror switch and by opening and closing both front doors with mirrors folded. With the DRBIII®, read DTCs. Does the same DTC reset? Yes → Go To 4 No → Replace the Passenger Folding Mirror Relay. Perform BODY VERIFICATION TEST - VER 1.	All

PASSENGER MIRROR RELAY OUTPUT OPEN (EXPORT ONLY) — Continued

TEST	ACTION	APPLICABILITY
4	Disconnect the Passenger Folding Mirror Relay connector. Disconnect the Body Control Module C4 connector. NOTE: Check connectors - Clean/repair as necessary. Measure the resistance between ground and the Passenger Folding Mirror Relay Control circuit in the relay connector. Is the resistance below 5.0 ohms? Yes → Repair the Passenger Folding Mirror Relay Control circuit for a short to ground. Perform BODY VERIFICATION TEST - VER 1. No → Go To 5	All
5	Disconnect the Passenger Folding Mirror Relay connector. Disconnect the Body Control Module C4 connector. NOTE: Check connectors - Clean/repair as necessary. Measure the resistance of the Passenger Folding Mirror Relay Control circuit between the relay connector and the BCM C4 connector. Is the resistance below 5.0 ohms? Yes → Replace the Body Control Module. Perform BODY VERIFICATION TEST - VER 1. No → Repair the Passenger Folding Mirror Relay Control circuit for an open. Perform BODY VERIFICATION TEST - VER 1.	All

Symptom:
PASSENGER MIRROR RELAY OUTPUT SHORT (EXPORT ONLY)

POSSIBLE CAUSES
INTERMITTENT CONDITION
PASSENGER FOLDING MIRROR RELAY
PASSENGER FOLDING MIRROR RELAY CONTROL CIRCUIT SHORTED TO VOLTAGE
BODY CONTROL MODULE

TEST	ACTION	APPLICABILITY
1	With the DRBIII®, record and erase DTC's. NOTE: Doors must be closed to allow the mirrors to fold with the power folding mirror switch. Attempt to operate the power folding mirror system with the power folding mirror switch and by opening and closing both front doors with mirrors folded. With the DRBIII®, read DTCs. Does the same DTC reset? Yes → Go To 2 No → The condition that caused this DTC is currently not present. Use the wiring diagram/schematic as a guide, and inspect the related wiring harness for a possible intermittent condition. Perform BODY VERIFICATION TEST - VER 1.	All
2	Remove the Passenger Folding Mirror Relay. Check connectors - Clean/repair as necessary. Install a substitute relay in place of the Passenger Folding Mirror Relay. With the DRBIII®, erase DTC's. NOTE: Doors must be closed to allow the mirrors to fold with the power folding mirror switch. Attempt to operate the power folding mirror system with the power folding mirror switch and by opening and closing both front doors with mirrors folded. With the DRBIII®, read DTCs. Does the same DTC reset? Yes → Go To 3 No → Replace the Passenger Folding Mirror Relay. Perform BODY VERIFICATION TEST - VER 1.	All
3	Disconnect the Passenger Folding Mirror Relay connector. Disconnect the Body Control Module C4 connector. NOTE: Check connectors - Clean/repair as necessary. Measure the voltage of the Passenger Folding Mirror Relay Control circuit in the relay connector. Is the voltage above 1.0 volts? Yes → Repair the Passenger Folding Mirror Relay Control circuit for a short to voltage. Perform BODY VERIFICATION TEST - VER 1. No → Replace the Body Control Module. Perform BODY VERIFICATION TEST - VER 1.	All

Symptom:

UNFOLD MIRROR OUTPUT FAILURE (EXPORT ONLY)

POSSIBLE CAUSES
INTERMITTENT CONDITION
PASSENGER FOLDING MIRROR RELAY
LEFT POWER MIRROR
RIGHT POWER MIRROR
DRIVER FOLDING MIRROR FOLD DRIVER SHORT TO VOLTAGE
PASSENGER FOLDING MIRROR RELAY OUTPUT SHORT TO VOLTAGE
PASSENGER FOLDING MIRROR RELAY INPUT SHORT TO VOLTAGE
DRIVER FOLDING MIRROR FOLD DRIVER SHORT TO GROUND
PASSENGER FOLDING MIRROR RELAY OUTPUT SHORT TO GROUND
PASSENGER FOLDING MIRROR RELAY INPUT SHORT TO GROUND
BODY CONTROL MODULE

TEST	ACTION	APPLICABILITY
1	With the DRBIII®, record and erase DTC's. NOTE: Doors must be closed to allow the mirrors to fold with the power folding mirror switch. Attempt to operate the power folding mirror system with the power folding mirror switch and by opening and closing both front doors with mirrors folded. With the DRBIII®, read DTCs. Does the same DTC reset? Yes → Go To 2 No → The condition that caused this DTC is currently not present. Use the wiring diagram/schematic as a guide, and inspect the related wiring harness for a possible intermittent condition. Perform BODY VERIFICATION TEST - VER 1.	All
2	Install a substitute relay in place of the Passenger Folding Mirror Relay. With the DRBIII®, erase DTC's. NOTE: Doors must be closed to allow the mirrors to fold with the power folding mirror switch. Attempt to operate the power folding mirror system with the power folding mirror switch and by opening and closing both front doors with mirrors folded. With the DRBIII®, read DTCs. Does the same DTC reset? Yes → Go To 3 No → Replace the Passenger Folding Mirror Relay. Perform BODY VERIFICATION TEST - VER 1.	All

UNFOLD MIRROR OUTPUT FAILURE (EXPORT ONLY) — Continued

TEST	ACTION	APPLICABILITY
3	Disconnect the Left Power Mirror connector. NOTE: Check connectors - Clean/repair as necessary. With the DRBIII®, erase DTC's. Operate the Power Folding Mirror switch. With the DRBIII®, read DTCs. Does the same DTC reset? Yes → Go To 4 No → Replace the Left Power Mirror. Perform BODY VERIFICATION TEST - VER 1.	All
4	Disconnect the Right Power Mirror connector. NOTE: Check connectors - Clean/repair as necessary. With the DRBIII®, erase DTC's. Operate the Power Folding Mirror switch. With the DRBIII®, read DTCs. Does the same DTC reset? Yes → Go To 5 No → Replace the Right Power Mirror. Perform BODY VERIFICATION TEST - VER 1.	All
5	Disconnect the Left and Right Power Mirror connectors. Disconnect the Body Control Module C2 connector. NOTE: Check connectors - Clean/repair as necessary. Measure for unwanted voltage on the Driver Folding Mirror Fold Driver circuit in the BCM C2 connector. Is there any voltage present? Yes → Repair the Driver Folding Mirror Fold Driver circuit for a short to voltage. Perform BODY VERIFICATION TEST - VER 1. No → Go To 6	All
6	Disconnect the Left and Right Power Mirror connectors. Disconnect the Passenger Folding Mirror Relay. NOTE: Check connectors - Clean/repair as necessary. Measure for unwanted voltage on the Passenger Folding Mirror Relay Output circuit in the relay connector. Is there any voltage present? Yes → Repair the Passenger Folding Mirror Relay Output circuit for a short to voltage. Perform BODY VERIFICATION TEST - VER 1. No → Go To 7	All
7	Disconnect the Body Control Module C2 connector. Disconnect the Passenger Folding Mirror Relay. NOTE: Check connectors - Clean/repair as necessary. Measure for unwanted voltage on the Passenger Folding Mirror Relay Input circuit in the relay connector. Is there any voltage present? Yes → Repair the Passenger Folding Mirror Relay Input circuit for a short to voltage. Perform BODY VERIFICATION TEST - VER 1. No → Go To 8	All

UNFOLD MIRROR OUTPUT FAILURE (EXPORT ONLY) — Continued

TEST	ACTION	APPLICABILITY
8	Disconnect the Left and Right Power Mirror connectors. Disconnect the Body Control Module C2 connector. NOTE: Check connectors - Clean/repair as necessary. Measure the resistance between ground and the Driver Folding Mirror Fold Driver circuit in the BCM C2 connector. Is the resistance below 5.0 ohms? Yes → Repair the Driver Folding Mirror Fold Driver circuit for a short to ground. Perform BODY VERIFICATION TEST - VER 1. No → Go To 9	All
9	Disconnect the Left and Right Power Mirror connectors. Disconnect the Passenger Folding Mirror Relay. NOTE: Check connectors - Clean/repair as necessary. Measure the resistance between ground and the Passenger Folding Mirror Relay Output circuit in the relay connector. Is the resistance below 5.0 ohms? Yes → Repair the Passenger Folding Mirror Relay Output circuit for a short to ground. Perform BODY VERIFICATION TEST - VER 1. No → Go To 10	All
10	Disconnect the Body Control Module C2 connector. Disconnect the Passenger Folding Mirror Relay. NOTE: Check connectors - Clean/repair as necessary. Measure the resistance between ground and the Passenger Folding Mirror Relay Input circuit in the relay connector. Is the resistance below 5.0 ohms? Yes → Repair the Passenger Folding Mirror Relay Input circuit for a short to ground. Perform BODY VERIFICATION TEST - VER 1. No → Replace the Body Control Module. Perform BODY VERIFICATION TEST - VER 1.	All

Symptom:

***BOTH MIRRORS DO NOT UNFOLD EXCEPT WITH EITHER FRONT DOOR (EXPORT ONLY)**

POSSIBLE CAUSES
RELATED DIAGNOSTIC TROUBLE CODES
POWER FOLDING MIRROR SWITCH
FOLDING MIRROR SWITCH SIGNAL SHORT TO GROUND
BODY CONTROL MODULE

TEST	ACTION	APPLICABILITY
1	With the DRBIII®, read DTCs. Does the DRBIII® display any related DTC's? Yes → Refer to symptom list for problems related to Power Folding Mirrors. Perform BODY VERIFICATION TEST - VER 1. No → Go To 2	All
2	Disconnect the Power Folding Mirror Switch connector. Check connectors - Clean/repair as necessary. Did the mirrors unfold? Yes → Replace the Power Folding Mirror Switch. Perform BODY VERIFICATION TEST - VER 1. No → Go To 3	All
3	Disconnect the Power Folding Mirror Switch connector. Disconnect the BCM C4 harness connector. Check connectors - Clean/repair as necessary. Measure the resistance of the Folding Mirror Switch Signal circuit at the Power Folding Mirror Switch connector to ground. Is the resistance below 5.0 ohms? Yes → Repair the Folding Mirror Switch Signal circuit for a short to ground. Perform BODY VERIFICATION TEST - VER 1. No → Replace the Body Control Module. Perform BODY VERIFICATION TEST - VER 1.	All

Symptom:

***BOTH POWER FOLDING MIRRORS DO NOT FOLD (EXPORT ONLY)**

POSSIBLE CAUSES
RELATED DIAGNOSTIC TROUBLE CODES
GROUND CIRCUIT OPEN
POWER FOLDING MIRROR SWITCH
FOLDING MIRROR SWITCH SIGNAL OPEN
BODY CONTROL MODULE

TEST	ACTION	APPLICABILITY
1	With the DRBIII®, read DTCs. Does the DRBIII® display any related DTC's? Yes → Refer to symptom list for problems related to Power Folding Mirrors. Perform BODY VERIFICATION TEST - VER 1. No → Go To 2	All
2	Disconnect the Power Folding Mirror switch connector Check connectors - Clean/repair as necessary. Measure the resistance of the ground circuit. Is the resistance below 5.0 ohms? Yes → Go To 3 No → Repair the ground circuit for an open. Perform BODY VERIFICATION TEST - VER 1.	All
3	Disconnect the Power Folding Mirror Switch connector. Check connectors - Clean/repair as necessary. With the DRBIII® in Inputs/Outputs, read the Foldaway Switch state. Connect a jumper wire between the Folding Mirror Switch Signal circuit and ground. Does the DRBIII® display change? Yes → Replace the Power Folding Mirror Switch. Perform BODY VERIFICATION TEST - VER 1. No → Go To 4	All
4	Disconnect the Power Folding Mirror Switch connector. Disconnect the BCM C4 harness connector. Check connectors - Clean/repair as necessary. Measure the resistance of the Folding Mirror Switch Signal circuit between the BCM C4 connector and the Power Folding Mirror Switch connector. Is the resistance below 5.0 ohms? Yes → Replace the Body Control Module. Perform BODY VERIFICATION TEST - VER 1. No → Repair the Folding Mirror Switch Signal circuit for an open. Perform BODY VERIFICATION TEST - VER 1.	All

Symptom:
*DRIVER FOLDING MIRROR DOES NOT FOLD (EXPORT ONLY)

POSSIBLE CAUSES
RELATED DIAGNOSTIC TROUBLE CODES
POWER MIRROR
FOLDING MIRROR UNFOLD DRIVER CIRCUIT OPEN
DRIVER FOLDING MIRROR FOLD DRIVER CIRCUIT OPEN
BODY CONTROL MODULE

TEST	ACTION	APPLICABILITY
1	With the DRBIII®, read Body Computer DTCs. Does the DRBIII® display any related DTC's? Yes → Refer to symptom list for problems related to Power Folding Mirrors. Perform BODY VERIFICATION TEST - VER 1. No → Go To 2	All
2	Disconnect the inoperative Power Mirror connector. NOTE: Check connectors - Clean/repair as necessary. Connect one lead of a test light to the Passenger Folding Mirror Relay Output circuit and the other lead to the appropriate Folding Mirror Unfold Driver in the power mirror harness connector. With the DRBIII®, actuate the Folding Mirrors. Does the test light illuminate brightly? Yes → Replace the appropriate Power Mirror. Perform BODY VERIFICATION TEST - VER 1. No → Go To 3	All
3	Disconnect the inoperative Power Mirror connector. Disconnect the Body Control Module C2 connector. NOTE: Check connectors - Clean/repair as necessary. Measure the appropriate Folding Mirror Unfold Driver circuit from the BCM C2 connector to the power mirror harness connector. Is the resistance below 5.0 ohms? Yes → Go To 4 No → Repair the appropriate Folding Mirror Unfold Driver circuit for an open. Perform BODY VERIFICATION TEST - VER 1.	All

*DRIVER FOLDING MIRROR DOES NOT FOLD (EXPORT ONLY) — Continued

TEST	ACTION	APPLICABILITY
4	Disconnect the inoperative Power Mirror connector. Disconnect the Body Control Module C2 connector. NOTE: Check connectors - Clean/repair as necessary. Measure the Driver Folding Mirror Fold Driver circuit from the BCM C2 connector to the mirror harness connector. Is the resistance below 5.0 ohms? Yes → Replace the Body Control Module. Perform BODY VERIFICATION TEST - VER 1. No → Repair the Driver Folding Mirror Fold Driver circuit for an open. Perform BODY VERIFICATION TEST - VER 1.	All

Symptom:

***PASSENGER FOLDING MIRROR DOES NOT FOLD (EXPORT ONLY)**

POSSIBLE CAUSES
RELATED DIAGNOSTIC TROUBLE CODES
PASSENGER FOLDING MIRROR RELAY
POWER MIRROR
FOLDING MIRROR UNFOLD DRIVER CIRCUIT OPEN
PASSENGER FOLDING MIRROR RELAY OUTPUT CIRCUIT OPEN
PASSENGER FOLDING MIRROR RELAY INPUT CIRCUIT OPEN
BODY CONTROL MODULE

TEST	ACTION	APPLICABILITY
1	With the DRBIII®, read Body Computer DTCs. Does the DRBIII® display any related DTC's? Yes → Refer to symptom list for problems related to Power Folding Mirrors. Perform BODY VERIFICATION TEST - VER 1. No → Go To 2	All
2	Disconnect the Passenger Folding Mirror Relay. Check connectors - Clean/repair as necessary. Connect a substitute relay in place of the Passenger Folding Mirror Relay. NOTE: Doors must be closed to allow the mirrors to fold with the power folding mirror switch. Attempt to operate the power folding mirror system with the power folding mirror switch and by opening and closing both front doors with mirrors folded. Does the system now operate properly? Yes → Replace the Passenger Folding Mirror Relay. Perform BODY VERIFICATION TEST - VER 1. No → Go To 3	All
3	Connect Passenger Folding Mirror Relay if disconnected in previous step. Disconnect the inoperative Power Mirror connector. NOTE: Check connectors - Clean/repair as necessary. Connect one lead of a test light to the Passenger Folding Mirror Relay Output circuit and the other lead to the appropriate Folding Mirror Unfold Driver in the power mirror harness connector. With the DRBIII®, actuate the Folding Mirrors. Does the test light illuminate brightly? Yes → Replace the appropriate Power Mirror. Perform BODY VERIFICATION TEST - VER 1. No → Go To 4	All

*PASSENGER FOLDING MIRROR DOES NOT FOLD (EXPORT ONLY) — Continued

TEST	ACTION	APPLICABILITY
4	Disconnect the inoperative Power Mirror connector. Disconnect the Body Control Module C2 connector. NOTE: Check connectors - Clean/repair as necessary. Measure the appropriate Folding Mirror Unfold Driver circuit from the BCM C2 connector to the power mirror harness connector. Is the resistance below 5.0 ohms? Yes → Go To 5 No → Repair the appropriate Folding Mirror Unfold Driver circuit for an open. Perform BODY VERIFICATION TEST - VER 1.	All
5	Disconnect the inoperative Power Mirror connector. Disconnect the Passenger Folding Mirror Relay. NOTE: Check connectors - Clean/repair as necessary. Measure the Passenger Folding Mirror Relay Output circuit from the relay connector to the mirror harness connector. Is the resistance below 5.0 ohms? Yes → Go To 6 No → Repair the Passenger Folding Mirror Relay Output circuit for an open. Perform BODY VERIFICATION TEST - VER 1.	All
6	Disconnect the Body Control Module C2 connector. Disconnect the Passenger Folding Mirror Relay. NOTE: Check connectors - Clean/repair as necessary. Measure the Passenger Folding Mirror Relay Input circuit from the relay connector to the BCM C2 connector. Is the resistance below 5.0 ohms? Yes → Replace the Body Control Module. Perform BODY VERIFICATION TEST - VER 1. No → Repair the Passenger Folding Mirror Relay Input circuit for an open. Perform BODY VERIFICATION TEST - VER 1.	All

Symptom:
AMP MESSAGE NOT RECEIVED

When Monitored and Set Condition:

AMP MESSAGE NOT RECEIVED

When Monitored: With the ignition on.

Set Condition: The Hands Free Module does not receive a message from the amplifier.

POSSIBLE CAUSES
ATTEMPT TO COMMUNICATE WITH THE AMPLIFIER
MODULE

TEST	ACTION	APPLICABILITY
1	Turn the ignition on. Turn the Radio on. With the DRBIII®, attempt to communicate with the Amplifier. Was the DRBIII® able to I/D or communicate with the Amplifier? Yes → Go To 2 No → Refer to the Communication category for the related symptom(s). Perform BODY VERIFICATION TEST - VER 1.	All
2	With the DRBIII®, erase DTC's. Cycle the ignition switch from off to on and wait approximately 1 minute. With the DRBIII®, read DTC's. Did this DTC reset? Yes → Replace and program the Hands Free Module in accordance with the service information. Perform BODY VERIFICATION TEST - VER 1. No → Test Complete.	All

Symptom:
AUDIO HARDWARE MESSAGE NOT RECEIVED

When Monitored and Set Condition:

AUDIO HARDWARE MESSAGE NOT RECEIVED

When Monitored: With the ignition on.

Set Condition: The Hands Free Module does not receive the bus message from the radio indicating what kind of radio the vehicle is equipped with.

POSSIBLE CAUSES
ATTEMPT TO COMMUNICATE WITH THE RADIO
MODULE

TEST	ACTION	APPLICABILITY
1	Turn the ignition on. Turn the Radio on. With the DRBIII®, attempt to communicate with the Radio. Was the DRBIII® able to I/D or communicate with the Radio? Yes → Go To 2 No → Refer to the Communication category for the related symptom(s). Perform BODY VERIFICATION TEST - VER 1.	All
2	With the DRBIII®, erase DTC's. Cycle the ignition switch from off to on and wait approximately 1 minute. With the DRBIII®, read DTC's. Did this DTC reset? Yes → Replace and program the Hands Free Module in accordance with the service information. Perform BODY VERIFICATION TEST - VER 1. No → Test Complete.	All

Symptom List:

BLUETOOTH ERROR
FLASH CHECKSUM ERROR
FLASH WRITE ERROR
PCI BUS INTERNAL ERROR
RAM WRITE ERROR
ROM CHECKSUM ERROR

Test Note: All symptoms listed above are diagnosed using the same tests. The title for the tests will be BLUETOOTH ERROR.

When Monitored and Set Condition:

BLUETOOTH ERROR

When Monitored: With the ignition on.

Set Condition: The Hands Free Module detects a fault during an internal diagnostic check.

FLASH CHECKSUM ERROR

When Monitored: With the ignition on.

Set Condition: The Hands Free Module detects a fault during an internal diagnostic check.

FLASH WRITE ERROR

When Monitored: With the ignition on.

Set Condition: The Hands Free Module detects a fault during an internal diagnostic check.

PCI BUS INTERNAL ERROR

When Monitored: With the ignition on.

Set Condition: The Hands Free Module detects a fault during an internal diagnostic check.

RAM WRITE ERROR

When Monitored: With the ignition on.

Set Condition: The Hands Free Module detects a fault during an internal diagnostic check.

ROM CHECKSUM ERROR

When Monitored: With the ignition on.

Set Condition: The Hands Free Module detects a fault during an internal diagnostic check.

BLUETOOTH ERROR — Continued

POSSIBLE CAUSES
HFM INTERNAL DTC FAILURE

TEST	ACTION	APPLICABILITY
1	**NOTE: This trouble code indicates an internal Hands Free Module fault.** With the DRBIII®, read and record the HFM DTCs and then erase the DTCs. Perform 5 ignition key cycles, leaving the ignition key on for a minimum of 90 seconds per cycle. With the DRBIII®, read the DTCs. Did the same DTC return? Yes → Replace and program the Hands Free Module in accordance with the Service Information. Perform BODY VERIFICATION TEST - VER 1. No → Test Complete.	All

Symptom List:

BODY STYLE MESSAGE NOT RECEIVED
INVALID BODY STYLE

Test Note: All symptoms listed above are diagnosed using the same tests. The title for the tests will be BODY STYLE MESSAGE NOT RECEIVED.

When Monitored and Set Condition:

BODY STYLE MESSAGE NOT RECEIVED

When Monitored: With the ignition on.

Set Condition: The Hands Free Module does not receive the body style message from the PCM.

POSSIBLE CAUSES
ATTEMPT TO COMMUNICATE WITH THE PCM
CHECK PCM IS ACTIVE ON BUS
MODULE

TEST	ACTION	APPLICABILITY
1	Turn the ignition on. With the DRBIII®, attempt to communicate with the PCM. Was the DRBIII® able to I/D or communicate with the PCM? Yes → Go To 2 No → Refer to the Communication category for the related symptom(s). Perform BODY VERIFICATION TEST - VER 1.	All
2	Turn the ignition on. With the DRBIII®, select System Monitors then J1850 Module Scan. Is the PCM one of the modules present on the bus? Yes → Go To 3 No → Refer to the Communication category for the related symptom(s). Perform BODY VERIFICATION TEST - VER 1.	All
3	With the DRBIII®, erase DTC's. Cycle the ignition switch from off to on and wait approximately 1 minute. With the DRBIII®, read DTC's. Did this DTC reset? Yes → Replace and program the Hands Free Module in accordance with the service information. Perform BODY VERIFICATION TEST - VER 1. No → Test Complete.	All

Symptom:

GENERAL MICROPHONE FAULT

POSSIBLE CAUSES
HANDS FREE MODULE
MICROPHONE CIRCUITS OPEN
MICROPHONE CIRCUITS SHORT TO GROUND
MICROPHONE CIRCUITS SHORT TO VOLTAGE
MICROPHONE CIRCUITS SHORTED TOGETHER
REAR VIEW MIRROR
INTERMITTENT CONDITION

TEST	ACTION	APPLICABILITY
1	Turn the ignition on. With the DRBIII®, erase DTCs. Attempt to make a phone call using the system. With the DRBIII®, read DTCs. Does the DRBIII® display this DTC? Yes → Go To 2 No → Go To 7	All
2	Turn the ignition off. Disconnect the Rear View Mirror C2 harness connector. Disconnect the Hands Free Module C1 harness connector. Measure the resistance of each Microphone circuit between the HFM connector and the rear view mirror connector. Is the resistance below 10.0 ohms for each measurement? Yes → Go To 3 No → Repair the Microphone circuits for an open. Perform BODY VERIFICATION TEST - VER 1.	All
3	Turn the ignition off. Disconnect the Rear View Mirror C2 harness connector. Disconnect the Hands Free Module C1 harness connector. Measure the resistance between ground and each Microphone circuit. Is the resistance above 1000.0 ohms for each measurement? Yes → Go To 4 No → Repair the Microphone circuits for a short to ground. Perform BODY VERIFICATION TEST - VER 1.	All

GENERAL MICROPHONE FAULT — Continued

TEST	ACTION	APPLICABILITY
4	Turn the ignition off. Disconnect the Rear View Mirror C2 harness connector. Disconnect the Hands Free Module C1 harness connector. Turn the ignition on. Measure the voltage of each Microphone circuit. Is the voltage below 1.0 volt for each measurement? Yes → Go To 5 No → Repair the Microphone circuits for a short to voltage. Perform BODY VERIFICATION TEST - VER 1.	All
5	Turn the ignition off. Disconnect the Rear View Mirror C2 harness connector. Disconnect the Hands Free Module C1 harness connector. Measure the resistance between each Microphone circuit in the rear view mirror harness connector. Is the resistance above 1000 ohms for each measurement? Yes → Go To 6 No → Refer the Microphone circuits for a short together. Perform BODY VERIFICATION TEST - VER 1.	All
6	Replace the Rear View Mirror in accordance with the Service Information. Turn the ignition on. With the DRBIII®, erase DTC's. Attempt to make a phone call using the system. With the DRBIII®, read DTCs. Does the DRBIII® display this DTC? Yes → Inspect the wiring and connectors for damage or shorted circuits. Repair as necessary. If ok, replace and program the Hands Free Module in accordance with the Service Information. Perform BODY VERIFICATION TEST - VER 1. No → Test complete. Perform BODY VERIFICATION TEST - VER 1.	All
7	**NOTE: The conditions that set the DTC are not present at this time. The following list may help in identifying the intermittent condition.** With the engine running at normal operating temperature, wiggle the wiring harnesses. This is to try and duplicate the failure. Refer to any Technical Service Bulletins (TSB) that may apply. Visually inspect the related wiring harness. Look for any chafed, pierced, pinched, or partially broken wires. Visually inspect the related wiring harness connectors. Look for broken, bent, pushed out, or corroded terminals. Were any of the above conditions present? Yes → Repair as necessary. Perform BODY VERIFICATION TEST - VER 1. No → Test Complete.	All

Symptom:
IGNITION POWER MESSAGE NOT RECEIVED

When Monitored and Set Condition:

IGNITION POWER MESSAGE NOT RECEIVED

When Monitored: With the ignition on.

Set Condition: The Hands Free Module does not receive an Ignition Power Status message from the BCM.

POSSIBLE CAUSES
ATTEMPT TO COMMUNICATE WITH THE BCM
MODULE

TEST	ACTION	APPLICABILITY
1	Start and idle the engine. With the DRBIII®, attempt to I/D and communicate with the BCM. Was the DRBIII® able to I/D or communicate with the BCM? Yes → Go To 2 No → Refer to the Communication category for the related symptom(s). Perform BODY VERIFICATION TEST - VER 1.	All
2	With the DRBIII®, erase DTC's. Cycle the ignition switch from off to on and wait approximately 1 minute. With the DRBIII®, read DTC's. Did this DTC reset? Yes → Replace and program the Hands Free Module in accordance with the service information. Perform BODY VERIFICATION TEST - VER 1. No → Test Complete.	All

Symptom List:

LEFT AUDIO INPUT SHORT TO GROUND
LEFT AUDIO INPUT SHORT TO VOLTAGE
LEFT AUDIO OUTPUT 1 SHORT TO GROUND
LEFT AUDIO OUTPUT 1 SHORT TO VOLTAGE

Test Note: All symptoms listed above are diagnosed using the same tests. The title for the tests will be LEFT AUDIO INPUT SHORT TO GROUND.

When Monitored and Set Condition:

LEFT AUDIO INPUT SHORT TO GROUND

When Monitored: With the ignition on

Set Condition: The Hands Free Module detects low voltage on the input circuit.

LEFT AUDIO INPUT SHORT TO VOLTAGE

When Monitored: With the ignition on.

Set Condition: The Hands Free Module detects high voltage on the input circuit.

LEFT AUDIO OUTPUT 1 SHORT TO GROUND

When Monitored: With the ignition on.

Set Condition: The Hands Free Module detects a short to ground on the Left Audio Output circuit.

LEFT AUDIO OUTPUT 1 SHORT TO VOLTAGE

When Monitored: With the ignition on.

Set Condition: The Hands Free Module detects a short to voltage on the Left Audio Output circuit.

POSSIBLE CAUSES
HANDS FREE MODULE
LEFT AUDIO OUTPUT AND RIGHT AUDIO OUTPUT CIRCUITS SHORTED TOGETHER
LEFT AUDIO OUTPUT CIRCUIT OPEN
LEFT AUDIO OUTPUT CIRCUIT SHORT TO GROUND
LEFT AUDIO OUTPUT CIRCUIT SHORT TO VOLTAGE
INTERMITTENT CONDITION

LEFT AUDIO INPUT SHORT TO GROUND — Continued

TEST	ACTION	APPLICABILITY
1	Turn the ignition on. With the DRBIII®, erase HFM DTCs. Attempt to make a phone call using the system. With the DRBIII®, read HFM DTCs. Does the DRBIII® display this DTC? Yes → Go To 2 No → Go To 6	All
2	Turn the ignition off. Disconnect the Radio C2 harness connector. Disconnect the Hands Free Module C2 harness connector. Measure the resistance of the Left Audio Output circuit between the HFM connector and the radio connector. Is the resistance below 10.0 ohms? Yes → Go To 3 No → Repair the Left Audio Output circuit for an open. Perform BODY VERIFICATION TEST - VER 1.	All
3	Turn the ignition off. Disconnect the Radio C2 harness connector. Disconnect the Hands Free Module C2 harness connector. Measure the resistance between ground and the Left Audio Output circuit. Is the resistance above 1000.0 ohms? Yes → Go To 4 No → Repair the Left Audio Output circuit for a short to ground. Perform BODY VERIFICATION TEST - VER 1.	All
4	Turn the ignition off. Disconnect the Radio C2 harness connector. Disconnect the Hands Free Module C2 harness connector. Turn the ignition on. Measure the voltage of the Left Audio Output circuit. Is the voltage below 1.0 volt? Yes → Go To 5 No → Repair the Left Audio Output circuit for a short to voltage. Perform BODY VERIFICATION TEST - VER 1.	All
5	Turn the ignition off. Disconnect the Radio C2 harness connector. Disconnect the Hands Free Module C2 harness connector. Measure the resistance between the Left Audio Output circuit and the Right Audio Output circuit. Is the resistance above 1000 ohms? Yes → Inspect the wiring and connectors for damage or shorted circuits. Repair as necessary. If ok, replace and program the Hands Free Module in accordance with the Service Information. Perform BODY VERIFICATION TEST - VER 1. No → Repair the Left Audio Output circuit for a short to the Right Audio Output circuit. Perform BODY VERIFICATION TEST - VER 1.	All

LEFT AUDIO INPUT SHORT TO GROUND — Continued

TEST	ACTION	APPLICABILITY
6	**NOTE: The conditions that set the DTC are not present at this time. The following list may help in identifying the intermittent condition.** With the engine running at normal operating temperature, wiggle the wiring harnesses. This is to try and duplicate the failure. Refer to any Technical Service Bulletins (TSB) that may apply. Visually inspect the related wiring harness. Look for any chafed, pierced, pinched, or partially broken wires. Visually inspect the related wiring harness connectors. Look for broken, bent, pushed out, or corroded terminals. Were any of the above conditions present? Yes → Repair as necessary. Perform BODY VERIFICATION TEST - VER 1. No → Test Complete.	All

Symptom List:

MIRROR POWER CIRCUIT SHORT TO GROUND
MIRROR POWER CIRCUIT SHORT TO VOLTAGE

Test Note: All symptoms listed above are diagnosed using the same tests. The title for the tests will be MIRROR POWER CIRCUIT SHORT TO GROUND.

POSSIBLE CAUSES
HANDS FREE MODULE
IGNITION RUN/ACC SIGNAL CIRCUIT OPEN
IGNITION RUN/ACC SIGNAL CIRCUIT SHORT TO GROUND
IGNITION RUN/ACC SIGNAL CIRCUIT SHORT TO OTHER CIRCUITS
IGNITION RUN/ACC SIGNAL CIRCUIT SHORT TO VOLTAGE
REAR VIEW MIRROR
INTERMITTENT CONDITION

TEST	ACTION	APPLICABILITY
1	Turn the ignition on. With the DRBIII®, erase DTCs. Attempt to make a phone call using the system. With the DRBIII®, read DTCs. Does the DRBIII® display this DTC? Yes → Go To 2 No → Go To 7	All
2	Turn the ignition off. Disconnect the Rear View Mirror C2 harness connector. Disconnect the Hands Free Module C1 harness connector. Measure the resistance of the Ignition RUN/ACC Signal circuit between the HFM connector and the rear view mirror connector. Is the resistance below 10.0 ohms? Yes → Go To 3 No → Repair the Ignition RUN/ACC Signal circuit for an open. Perform BODY VERIFICATION TEST - VER 1.	All
3	Turn the ignition off. Disconnect the Rear View Mirror C2 harness connector. Disconnect the Hands Free Module C1 harness connector. Measure the resistance between ground and the Ignition RUN/ACC Signal circuit. Is the resistance above 1000.0 ohms? Yes → Go To 4 No → Repair the Ignition RUN/ACC Signal circuit for a short to ground. Perform BODY VERIFICATION TEST - VER 1.	All

MIRROR POWER CIRCUIT SHORT TO GROUND — Continued

TEST	ACTION	APPLICABILITY
4	Turn the ignition off. Disconnect the Rear View Mirror C2 harness connector. Disconnect the Hands Free Module C1 harness connector. Turn the ignition on. Measure the voltage of the Ignition RUN/ACC Signal circuit. Is the voltage below 1.0 volt? Yes → Go To 5 No → Repair the Ignition RUN/ACC Signal circuit for a short to voltage. Perform BODY VERIFICATION TEST - VER 1.	All
5	Turn the ignition off. Disconnect the Rear View Mirror C2 harness connector. Disconnect the Hands Free Module C1 harness connector. Measure the resistance between the Ignition RUN/ACC Signal circuit and each of the other circuits in the rear view mirror connector. Is the resistance above 1000 ohms for each measurement? Yes → Go To 6 No → Repair the Ignition RUN/ACC Signal circuit for a short to other circuits. Perform BODY VERIFICATION TEST - VER 1.	All
6	Replace the Rear View Mirror in accordance with the Service Information. Turn the ignition on. With the DRBIII®, erase the DTC's Attempt to make a phone call using the system. With the DRBIII®, read DTCs. Does the DRBIII® display this DTC? Yes → Inspect the wiring and connectors for damage or shorted circuits. Repair as necessary. If ok, replace and program the Hands Free Module in accordance with the Service Information. Perform BODY VERIFICATION TEST - VER 1. No → Test complete. Perform BODY VERIFICATION TEST - VER 1.	All
7	**NOTE: The conditions that set the DTC are not present at this time. The following list may help in identifying the intermittent condition.** With the engine running at normal operating temperature, wiggle the wiring harnesses. This is to try and duplicate the failure. Refer to any Technical Service Bulletins (TSB) that may apply. Visually inspect the related wiring harness. Look for any chafed, pierced, pinched, or partially broken wires. Visually inspect the related wiring harness connectors. Look for broken, bent, pushed out, or corroded terminals. Were any of the above conditions present? Yes → Repair as necessary. Perform BODY VERIFICATION TEST - VER 1. No → Test Complete.	All

Symptom List:

PCI BUS BUSY
PCI BUS CIRCUIT OPEN
PCI BUS CIRCUIT SHORT TO GROUND
PCI BUS CIRCUIT SHORT TO VOLTAGE

Test Note: All symptoms listed above are diagnosed using the same tests. The title for the tests will be PCI BUS BUSY.

When Monitored and Set Condition:

PCI BUS BUSY

When Monitored: With the ignition on.

Set Condition: The HFM has detected a fault on the PCI Bus circuit.

PCI BUS CIRCUIT OPEN

When Monitored: With the ignition on.

Set Condition: The HFM has detected a fault on the PCI Bus circuit.

PCI BUS CIRCUIT SHORT TO GROUND

When Monitored: With the ignition on.

Set Condition: The HFM has detected a fault on the PCI Bus circuit.

PCI BUS CIRCUIT SHORT TO VOLTAGE

When Monitored: With the ignition on.

Set Condition: The HFM has detected a fault on the PCI Bus circuit.

POSSIBLE CAUSES
INTERMITTENT CONDITION

PCI BUS BUSY — Continued

TEST	ACTION	APPLICABILITY
1	**NOTE: For this code to be active, the DRBIII® will not be able to communicate with any modules on the vehicle (except the PCM).** **NOTE: Clear the code. If this code continues to set and the DRBIII® can still communicate with the module, it will be necessary to replace the module.** **NOTE: The conditions that set the DTC are not present at this time. The following list may help in identifying the intermittent condition.** With the engine running at normal operating temperature, wiggle the wiring harnesses. This is to try and duplicate the complete bus failure condition. Refer to any Technical Service Bulletins (TSB) that may apply. Visually inspect the related wiring harness. Look for any chafed, pierced, pinched, or partially broken wires. Visually inspect the related wiring harness connectors. Look for broken, bent, pushed out, or corroded terminals. Were any of the above conditions present? Yes → Repair as necessary. Perform BODY VERIFICATION TEST - VER 1. No → Test Complete.	All

Symptom List:

PHONE SWITCH STUCK
VOICE RECOGNITION SWITCH STUCK
VOICE RECOGNITION/PHONE SWITCH CIRCUIT RATIONALITY
VOICE RECOGNITION/PHONE SWITCH CIRCUIT SHORT TO GROUND
VOICE RECOGNITION/PHONE SWITCH CIRCUIT SHORT TO VOLTAGE

Test Note: All symptoms listed above are diagnosed using the same tests. The title for the tests will be PHONE SWITCH STUCK.

When Monitored and Set Condition:

PHONE SWITCH STUCK

When Monitored: With the ignition on.

Set Condition: The Hands Free Module detects voltage between 2.8 volts and 3.3 volts on the VR/Phone Switch Signal circuit for more than 30 seconds.

VOICE RECOGNITION SWITCH STUCK

When Monitored: With the ignition on.

Set Condition: The Hands Free Module detects voltage between 3.5 volts and 4.0 volts on the VR/Phone Switch Signal circuit for more than 30 seconds.

VOICE RECOGNITION/PHONE SWITCH CIRCUIT RATIONALITY

When Monitored: With the ignition on.

Set Condition: The Hands Free Module detects an invalid voltage signal on the VR/Phone Switch Signal circuit.

VOICE RECOGNITION/PHONE SWITCH CIRCUIT SHORT TO GROUND

When Monitored: With the ignition on.

Set Condition: The Hands Free Module detects voltage below 0.6 volt on the VR/Phone Switch Signal circuit.

VOICE RECOGNITION/PHONE SWITCH CIRCUIT SHORT TO VOLTAGE

When Monitored: With the ignition on.

Set Condition: The Hands Free Module detects voltage above 4.7 volts on the VR/Phone Switch Signal circuit.

POSSIBLE CAUSES
HANDS FREE MODULE

PHONE SWITCH STUCK — Continued

POSSIBLE CAUSES
HANDS FREE MODULE
HANDS FREE MODULE
REAR VIEW MIRROR
SENSOR GROUND CIRCUIT OPEN
VR/PHONE SWITCH SIGNAL CIRCUIT OPEN
VR/PHONE SWITCH SIGNAL CIRCUIT SHORTED TO GROUND
VR/PHONE SWITCH SIGNAL CIRCUIT SHORTED TO SENSOR GROUND
VR/PHONE SWITCH SIGNAL CIRCUIT SHORTED TO VOLTAGE

TEST	ACTION	APPLICABILITY
1	Turn the ignition off. Disconnect the Rear View Mirror C2 harness connector. Turn the ignition on. Measure the voltage of the VR/Phone Switch Signal circuit in the Rear View Mirror harness connector. Chose which of the following describes the voltage measured. Voltage is above 5.3 volts Go To 2 Voltage is between 4.7 and 5.3 volts Go To 3 Voltage is below 4.7 volt Go To 4	All
2	Turn the ignition off. Disconnect the Rear View Mirror C2 harness connector. Disconnect the Hands Free Module C1 harness connector. Turn the ignition on. Measure the voltage of the VR/Phone Switch Signal circuit. Is the voltage below 1.0 volt? Yes → Inspect the wiring and connectors for damage or shorted circuits. Repair as necessary. If ok, replace and program the Hands Free Module in accordance with the Service Information. Perform BODY VERIFICATION TEST - VER 1. No → Repair the VR/Phone Switch Signal circuit for a short to voltage. Perform BODY VERIFICATION TEST - VER 1.	All

PHONE SWITCH STUCK — Continued

TEST	ACTION	APPLICABILITY
3	Turn the ignition off. Disconnect the Rear View Mirror C2 harness connector. Turn the ignition on. With the DRBIII®, read the VR/Phone Switch Signal voltage. Connect one end of a jumper wire to the VR/Phone Switch Signal circuit at the Rear View Mirror harness connector. While observing the DRBIII®, momentarily connect and disconnect the other end of the jumper wire to Sensor Ground at the Rear View Mirror harness connector. **NOTE: The DRBIII® sensor voltage should switch from above 4.7 volts when jumper is not connected to below 0.6 volts when jumper is connected.** Does sensor voltage switch from above 4.7 volts to below 0.6 volt as described? Yes → Replace the Rear View Mirror in accordance with the service information. Perform BODY VERIFICATION TEST - VER 1. No → Inspect the wiring and connectors for damage or shorted circuits. Repair as necessary. If ok, replace and program the Hands Free Module in accordance with the Service Information. Perform BODY VERIFICATION TEST - VER 1.	All
4	Turn the ignition off. Disconnect the Rear View Mirror C2 harness connector. Disconnect the Hands Free Module C1 harness connector. Measure the resistance of the VR/Phone Switch Signal circuit between the HFM connector and the rear view mirror connector. Is the resistance below 10.0 ohms? Yes → Go To 5 No → Repair the VR/Phone Switch Signal circuit for an open. Perform BODY VERIFICATION TEST - VER 1.	All
5	Turn the ignition off. Disconnect the Rear View Mirror C2 harness connector. Disconnect the Hands Free Module C1 harness connector. Measure the resistance of the Sensor Ground circuit between the HFM connector and the rear view mirror connector. Is the resistance below 10.0 ohms? Yes → Go To 6 No → Repair the Sensor Ground circuit for an open. Perform BODY VERIFICATION TEST - VER 1.	All
6	Turn the ignition off. Disconnect the Rear View Mirror C2 harness connector. Disconnect the Hands Free Module C1 harness connector. Measure the resistance between ground and the VR/Phone Switch Signal circuit. Is the resistance above 1000.0 ohms? Yes → Go To 7 No → Repair the VR/Phone Switch Signal circuit for a short to ground. Perform BODY VERIFICATION TEST - VER 1.	All

PHONE SWITCH STUCK — Continued

TEST	ACTION	APPLICABILITY
7	Turn the ignition off. Disconnect the Rear View Mirror C2 harness connector. Disconnect the Hands Free Module C1 harness connector. Measure the resistance between Sensor Ground and the VR/Phone Switch Signal circuit at the Rear View Mirror harness connector. Is the resistance above 1000.0 ohms? Yes → Inspect the wiring and connectors for damage or shorted circuits. Repair as necessary. If ok, replace and program the Hands Free Module in accordance with the Service Information. Perform BODY VERIFICATION TEST - VER 1. No → Repair the VR/Phone Switch Signal circuit for a short to the Sensor Ground circuit. Perform BODY VERIFICATION TEST - VER 1.	All

Symptom:

PRNDL MESSAGE NOT RECEIVED

When Monitored and Set Condition:

PRNDL MESSAGE NOT RECEIVED

When Monitored: With the ignition on.

Set Condition: The Hands Free Module does not receive a gear selector message from the PCM/TCM.

POSSIBLE CAUSES
ATTEMPT TO COMMUNICATE WITH THE PCM (TCM)
MODULE

TEST	ACTION	APPLICABILITY
1	Turn the ignition on. With the DRBIII®, attempt to communicate with the PCM (TCM). Was the DRBIII® able to I/D or communicate with the PCM? Yes → Go To 2 No → Refer to the Communication category for the related symptom(s). Perform BODY VERIFICATION TEST - VER 1.	All
2	With the DRBIII®, erase DTC's. Cycle the ignition switch from off to on and wait approximately 1 minute. With the DRBIII®, read DTC's. Did this DTC reset? Yes → Replace and program the Hands Free Module in accordance with the service information. Perform BODY VERIFICATION TEST - VER 1. No → Test Complete.	All

Symptom:
RADIO MESSAGE NOT RECEIVED

When Monitored and Set Condition:

RADIO MESSAGE NOT RECEIVED

When Monitored: With the ignition on.

Set Condition: The Hands Free Module does not receive a message from the radio.

POSSIBLE CAUSES
ATTEMPT TO COMMUNICATE WITH THE RADIO MODULE

TEST	ACTION	APPLICABILITY
1	Turn the ignition on. Turn the Radio on. With the DRBIII®, attempt to communicate with the Radio. Was the DRBIII® able to I/D or communicate with the Radio? Yes → Go To 2 No → Refer to the Communication category for the related symptom(s). Perform BODY VERIFICATION TEST - VER 1.	All
2	With the DRBIII®, erase DTC's. Cycle the ignition switch from off to on and wait approximately 1 minute. With the DRBIII®, read DTC's. Did this DTC reset? Yes → Replace and program the Hands Free Module in accordance with the service information. Perform BODY VERIFICATION TEST - VER 1. No → Test Complete.	All

Symptom List:

RIGHT AUDIO INPUT SHORT TO GROUND
RIGHT AUDIO INPUT SHORT TO VOLTAGE
RIGHT AUDIO OUTPUT 1 SHORT TO GROUND
RIGHT AUDIO OUTPUT 1 SHORT TO VOLTAGE

Test Note: All symptoms listed above are diagnosed using the same tests. The title for the tests will be RIGHT AUDIO INPUT SHORT TO GROUND.

When Monitored and Set Condition:

RIGHT AUDIO INPUT SHORT TO GROUND

When Monitored: With the ignition on.

Set Condition: The Hands Free Module detects low voltage on the input circuit.

RIGHT AUDIO INPUT SHORT TO VOLTAGE

When Monitored: With the ignition on.

Set Condition: The Hands Free Module detects high voltage on the input circuit.

RIGHT AUDIO OUTPUT 1 SHORT TO GROUND

When Monitored: With the ignition on.

Set Condition: The Hands Free Module detects a short to ground on the Right Audio Output circuit.

RIGHT AUDIO OUTPUT 1 SHORT TO VOLTAGE

When Monitored: With the ignition on.

Set Condition: The Hands Free Module detects a short to voltage on the Right Audio Output circuit.

POSSIBLE CAUSES
HANDS FREE MODULE
LEFT AUDIO OUTPUT AND RIGHT AUDIO OUTPUT CIRCUITS SHORTED TOGETHER
RIGHT AUDIO OUTPUT CIRCUIT OPEN
RIGHT AUDIO OUTPUT CIRCUIT SHORT TO GROUND
RIGHT AUDIO OUTPUT CIRCUIT SHORT TO VOLTAGE
INTERMITTENT CONDITION

RIGHT AUDIO INPUT SHORT TO GROUND — Continued

TEST	ACTION	APPLICABILITY
1	Turn the ignition on. With the DRBIII®, erase HFM DTCs. Attempt to make a phone call using the system. With the DRBIII®, read HFM DTCs. Does the DRBIII® display this DTC? Yes → Go To 2 No → Go To 6	All
2	Turn the ignition off. Disconnect the Radio C2 harness connector. Disconnect the Hands Free Module C2 harness connector. Measure the resistance of the Right Audio Output circuit between the HFM connector and the radio connector. Is the resistance below 10.0 ohms? Yes → Go To 3 No → Repair the Right Audio Output circuit for an open. Perform BODY VERIFICATION TEST - VER 1.	All
3	Turn the ignition off. Disconnect the Radio C2 harness connector. Disconnect the Hands Free Module C2 harness connector. Measure the resistance between ground and the Right Audio Output circuit. Is the resistance above 1000.0 ohms? Yes → Go To 4 No → Repair the Right Audio Output circuit for a short to ground. Perform BODY VERIFICATION TEST - VER 1.	All
4	Turn the ignition off. Disconnect the Radio C2 harness connector. Disconnect the Hands Free Module C2 harness connector. Turn the ignition on. Measure the voltage of the Right Audio Output circuit. Is the voltage below 1.0 volt? Yes → Go To 5 No → Repair the Right Audio Output circuit for a short to voltage. Perform BODY VERIFICATION TEST - VER 1.	All
5	Turn the ignition off. Disconnect the Radio C2 harness connector. Disconnect the Hands Free Module harness C2 connector. Measure the resistance between the Left Audio Output circuit and the Right Audio Output circuit. Is the resistance above 1000 ohms? Yes → Inspect the wiring and connectors for damage or shorted circuits. Repair as necessary. If ok, replace and program the Hands Free Module in accordance with the Service Information. Perform BODY VERIFICATION TEST - VER 1. No → Repair the Left Audio Output circuit for a short to the Right Audio Output circuit. Perform BODY VERIFICATION TEST - VER 1.	All

RIGHT AUDIO INPUT SHORT TO GROUND — Continued

TEST	ACTION	APPLICABILITY
6	**NOTE: The conditions that set the DTC are not present at this time. The following list may help in identifying the intermittent condition.** With the engine running at normal operating temperature, wiggle the wiring harnesses. This is to try and duplicate the failure. Refer to any Technical Service Bulletins (TSB) that may apply. Visually inspect the related wiring harness. Look for any chafed, pierced, pinched, or partially broken wires. Visually inspect the related wiring harness connectors. Look for broken, bent, pushed out, or corroded terminals. Were any of the above conditions present? Yes → Repair as necessary. Perform BODY VERIFICATION TEST - VER 1. No → Test Complete.	All

Symptom:

RPM MESSAGE NOT RECEIVED

When Monitored and Set Condition:

RPM MESSAGE NOT RECEIVED

When Monitored: With the ignition on.

Set Condition: The Hands Free Module does not detect a Bus message indicating current engine rpm.

POSSIBLE CAUSES
ATTEMPT TO COMMUNICATE WITH THE PCM
MODULE

TEST	ACTION	APPLICABILITY
1	Start and idle the engine. With the DRBIII®, select Engine and read the Engine RPM. Was the DRBIII® able to I/D or communicate with the PCM and read RPM? Yes → Go To 2 No → Refer to the Communication category for the related symptom(s). Perform BODY VERIFICATION TEST - VER 1.	All
2	With the DRBIII®, erase DTC's. Cycle the ignition switch from off to on and wait approximately 1 minute. With the DRBIII®, read DTC's. Did this DTC reset? Yes → Replace and program the Hands Free Module in accordance with the service information. Perform BODY VERIFICATION TEST - VER 1. No → Test Complete.	All

Symptom:
VIN MESSAGE NOT RECEIVED

When Monitored and Set Condition:

VIN MESSAGE NOT RECEIVED

When Monitored: With the ignition on.

Set Condition: The Hands Free Module does not receive the VIN message from the PCM.

POSSIBLE CAUSES
ATTEMPT TO COMMUNICATE WITH THE PCM
CHECK PCM IS ACTIVE ON BUS
MODULE

TEST	ACTION	APPLICABILITY
1	Turn the ignition on. With the DRBIII®, attempt to communicate with the PCM. Was the DRBIII® able to I/D or communicate with the PCM? Yes → Go To 2 No → Refer to the Communication category for the related symptom(s). Perform BODY VERIFICATION TEST - VER 1.	All
2	Turn the ignition on. With the DRBIII®, select System Monitors then J1850 Module Scan. Is the PCM one of the modules present on the bus? Yes → Go To 3 No → Refer to the Communication category for the related symptom(s). Perform BODY VERIFICATION TEST - VER 1.	All
3	With the DRBIII®, erase DTC's. Cycle the ignition switch from off to on and wait approximately 1 minute. With the DRBIII®, read DTC's. Did this DTC reset? Yes → Replace and program the Hands Free Module in accordance with the service information. Perform BODY VERIFICATION TEST - VER 1. No → Test Complete.	All

Symptom List:

INITIALIZATION FAULT - SKREEM
TIRE SENSOR 1 HIGH PRESSURE ALERT - SKREEM
TIRE SENSOR 1 LOW PRESSURE ALERT - SKREEM
TIRE SENSOR 1 TRANSMIT FAILURE - SKREEM
TIRE SENSOR 2 HIGH PRESSURE ALERT - SKREEM
TIRE SENSOR 2 LOW PRESSURE ALERT - SKREEM
TIRE SENSOR 2 TRANSMIT FAILURE - SKREEM
TIRE SENSOR 3 HIGH PRESSURE ALERT - SKREEM
TIRE SENSOR 3 LOW PRESSURE ALERT - SKREEM
TIRE SENSOR 3 TRANSMIT FAILURE - SKREEM
TIRE SENSOR 4 HIGH PRESSURE ALERT - SKREEM
TIRE SENSOR 4 LOW PRESSURE ALERT - SKREEM
TIRE SENSOR 4 TRANSMIT FAILURE - SKREEM

Test Note: All symptoms listed above are diagnosed using the same tests. The title for the tests will be INITIALIZATION FAULT - SKREEM.

When Monitored and Set Condition:

INITIALIZATION FAULT - SKREEM

When Monitored: Ignition ON.

Set Condition: When the automatic Sensor/Transmitter relearn program is not successful, this DTC is set.

TIRE SENSOR 1 HIGH PRESSURE ALERT - SKREEM

When Monitored: Ignition ON.

Set Condition: When the SKREEM detects a high tire pressure condition from the number 1 Sensor/Transmitter.

TIRE SENSOR 1 LOW PRESSURE ALERT - SKREEM

When Monitored: Ignition ON.

Set Condition: When the SKREEM detects a low tire pressure condition from the number 1 Sensor/Transmitter.

TIRE SENSOR 1 TRANSMIT FAILURE - SKREEM

When Monitored: Ignition ON

Set Condition: When the SKREEM cannot detect the RF frequency from the number 1 Sensor/Transmitter. Could be caused by Sensor/Transmitter, SKREEM, or the system environment.

INITIALIZATION FAULT - SKREEM — Continued

TIRE SENSOR 2 HIGH PRESSURE ALERT - SKREEM

When Monitored: Ignition ON.

Set Condition: When the SKREEM detects a high tire pressure condition from the number 2 Sensor/Transmitter.

TIRE SENSOR 2 LOW PRESSURE ALERT - SKREEM

When Monitored: Ignition ON.

Set Condition: When the SKREEM detects a low tire pressure condition from the number 2 Sensor/Transmitter.

TIRE SENSOR 2 TRANSMIT FAILURE - SKREEM

When Monitored: Ignition ON.

Set Condition: When the SKREEM cannot detect the RF frequency from the number 2 Sensor/Transmitter. Could be caused by Sensor/Transmitter, SKREEM, or the system environment.

TIRE SENSOR 3 HIGH PRESSURE ALERT - SKREEM

When Monitored: Ignition ON.

Set Condition: When the SKREEM detects a high tire pressure condition from the number 3 Sensor/Transmitter.

TIRE SENSOR 3 LOW PRESSURE ALERT - SKREEM

When Monitored: Ignition ON.

Set Condition: When the SKREEM detects a low tire pressure condition from the number 3 Sensor/Transmitter.

TIRE SENSOR 3 TRANSMIT FAILURE - SKREEM

When Monitored: Ignition ON.

Set Condition: When the SKREEM cannot detect the RF frequency from the number 3 Sensor/Transmitter. Could be caused by Sensor/Transmitter, SKREEM, or the system environment.

TIRE SENSOR 4 HIGH PRESSURE ALERT - SKREEM

When Monitored: Ignition ON.

Set Condition: When the SKREEM detects a high tire pressure condition from the number 4 Sensor/Transmitter.

TIRE SENSOR 4 LOW PRESSURE ALERT - SKREEM

When Monitored: Ignition ON.

Set Condition: When the SKREEM detects a low tire pressure condition from the number 4 Sensor/Transmitter.

INITIALIZATION FAULT - SKREEM — Continued

TIRE SENSOR 4 TRANSMIT FAILURE - SKREEM

When Monitored: Ignition ON.

Set Condition: When the SKREEM cannot detect the RF frequency from the number 4 Sensor/Transmitter. Could be caused by Sensor/Transmitter, SKREEM, or the system environment.

POSSIBLE CAUSES
TIRE SENSOR LOW/HIGH PRESSURE ALERTS
SENSOR/TRANSMITTER INTERNAL FAULT

TEST	ACTION	APPLICABILITY
1	**NOTE: The below test is to locate the Tire Pressure Sensor/Transmitter.** **NOTE: If the tires have been rotated, the Tire Pressure Sensor/Transmitters are no longer in sequence from the factory. Faults are linked to Sensor/Transmitter ID's.** **NOTE: You must determine which Tire Pressure Sensor/Transmitter has set the fault or alert before diagnosing the system correctly.** **NOTE: Set ALL tire pressures to recommended specifications and recheck for faults/alerts.** The fault will set within two minutes when at 25 PSI. Starting with the left front wheel, deflate the tire down to 25 PSI. If the TPMS fault was detected and associated to this Sensor/Transmitter, it would correspond to the left front Sensor/Transmitter. If the TPMS fault was detected and not associated to this Sensor/Transmitter, repeat the process until the faulty Sensor/Transmitter has been identified. **NOTE: Once a fault/alert has set, it will establish the location of the Tire Pressure Sensors/Transmitter. Repeat steps until the applicable Tire Pressure Sensor/Transmitter has been located.** Perform this procedure prior to Symptom diagnosis. Continue Go To 2	All
2	**NOTE: The DTC can be cause by many different factors and might not be a Sensor/Transmitter or SKREEM fault.** **NOTE: Interference from other elements will over power the Sensor/Transmitter RF frequency making erratic operation to the TPMS.** Cycle the ignition switch from OFF to ON. With the DRBIII®, read DTC's. Does the DRBIII® display any TIRE SENSOR TRANSMIT FAILURE or INITIALIZATION FAULT DTC's? Yes → Go To 4 No → Go To 3	All

INITIALIZATION FAULT - SKREEM — Continued

TEST	ACTION	APPLICABILITY
3	Cycle the ignition switch from OFF to ON. Clear DTC's. **NOTE: Correct all tire pressure to recommended specifications.** Drive the vehicle for 10 minutes at 20 mph (32km/h). The Sensors/transmitters will be in drive mode operation. With the DRBIII®, read DTC's. Does the DRBIII® display TIRE SENSOR LOW PRESSURE ALERT or TIRE SENSOR HIGH PRESSURE ALERT DTC's? Yes → Check and adjust ALL tire pressures. If ok, replace and program the Tire Pressure Sensor/Transmitter in accordance with the Service Information. Perform TIRE PRESSURE VERIFICATION TEST - VER 1 - SKREEM. No → Go To 4	All
4	**NOTE: Some environment factors can disrupt the RF frequency signal. Check for RF frequency concerns and aftermarket accessories that would compromise the RF frequency signal before diagnosing Sensor/Transmitter or SKREEM being the fault.** **NOTE: Review with the customer their environmental driving conditions.** Are there environmental factors causing the RF frequency issue? Yes → Test Complete. No → Go To 5	All
5	Turn the ignition off. Replace the appropriate Tire Pressure Sensor/Transmitter in accordance with the service information. Drive the vehicle for 10 minutes at 20 mph (32km/h). The Sensors/transmitters will be in drive mode operation. With the DRBIII®, read DTC's. Does the DTC reset? Yes → Replace and program the SKREEM in accordance with the Service Information. Perform TIRE PRESSURE VERIFICATION TEST - VER 1 - SKREEM. No → Test Complete.	All

Symptom List:

PRNDL MESSAGE MISSING - SKREEM
VEHICLE SPEED MESSAGE MISSING - SKREEM

Test Note: All symptoms listed above are diagnosed using the same tests. The title for the tests will be PRNDL MESSAGE MISSING - SKREEM.

When Monitored and Set Condition:

PRNDL MESSAGE MISSING - SKREEM

When Monitored: Ignition ON.

Set Condition: When the PRNDL message is not received for 5 seconds, this DTC is set.

VEHICLE SPEED MESSAGE MISSING - SKREEM

When Monitored: Ignition ON.

Set Condition: When the vehicle speed message is not received for 5 seconds, this DTC is set.

POSSIBLE CAUSES
TCM DTC'S
INSTRUMENT CLUSTER DTC'S
BUS COMMUNICATION
SKREEM FAULT

PRNDL MESSAGE MISSING - SKREEM — Continued

TEST	ACTION	APPLICABILITY
1	**NOTE: The below test is to locate the Tire Pressure Sensor/Transmitter.** **NOTE: If the tires have been rotated, the Tire Pressure Sensor/Transmitters are no longer in sequence from the factory. Faults are linked to Sensor/Transmitter ID's.** **NOTE: You must determine which Tire Pressure Sensor/Transmitter has set the fault or alert before diagnosing the system correctly.** **NOTE: Set ALL tire pressures to recommended specifications and recheck for faults/alerts.** The fault will set within two minutes when at 25 PSI. Starting with the left front wheel, deflate the tire down to 25 PSI. If the TPMS fault was detected and associated to this Sensor/Transmitter, it would correspond to the left front Sensor/Transmitter. If the TPMS fault was detected and not associated to this Sensor/Transmitter, repeat the process until the faulty Sensor/Transmitter has been identified. **NOTE: Once a fault/alert has set, it will establish the location of the Tire Pressure Sensors/Transmitter. Repeat steps until the applicable Tire Pressure Sensor/Transmitter has been located.** Perform this procedure prior to Symptom diagnosis. Continue Go To 2	All
2	Cycle the ignition switch from OFF to ON. With the DRBIII®, record and erase DTC's. Drive the vehicle. With the DRBIII®, read the Transmission DTC's. Does the DRBIII® display any TCM DTC's? Yes → Refer to Transmission information for the related symptom(s). Perform TIRE PRESSURE VERIFICATION TEST - VER 1 - SKREEM. No → Go To 3	All
3	Cycle the ignition switch from OFF to ON. With the DRBIII®, monitor the Instrument Cluster's Vehicle Speed or PRNDL data. Does the DRBIII® display Vehicle Speed or PRNDL data? Yes → Replace and program the SKREEM in accordance with the Service Information. Perform TIRE PRESSURE VERIFICATION TEST - VER 1 - SKREEM. No → Refer to BODY COMMUNICATION for the related symptom(s). Perform TIRE PRESSURE VERIFICATION TEST - VER 1 - SKREEM.	All

Symptom List:

SENSOR 1 FAULT - SKREEM
SENSOR 2 FAULT - SKREEM
SENSOR 3 FAULT - SKREEM
SENSOR 4 FAULT - SKREEM
TIRE SENSOR 1 LOW BATTERY - SKREEM
TIRE SENSOR 2 LOW BATTERY - SKREEM
TIRE SENSOR 3 LOW BATTERY - SKREEM
TIRE SENSOR 4 LOW BATTERY - SKREEM

Test Note: All symptoms listed above are diagnosed using the same tests. The title for the tests will be SENSOR 1 FAULT - SKREEM.

When Monitored and Set Condition:

SENSOR 1 FAULT - SKREEM

When Monitored: Ignition On.

Set Condition: When the SKREEM detects an internal fault condition from the number 1 Sensor/Transmitter.

SENSOR 2 FAULT - SKREEM

When Monitored: Ignition ON.

Set Condition: When the SKREEM detects an internal fault condition from the number 2 Sensor/Transmitter.

SENSOR 3 FAULT - SKREEM

When Monitored: Ignition ON.

Set Condition: When the SKREEM detects an internal fault condition from the number 3 Sensor/Transmitter.

SENSOR 4 FAULT - SKREEM

When Monitored: Ignition ON.

Set Condition: When the SKREEM detects an internal fault condition from the number 4 Sensor/Transmitter.

TIRE SENSOR 1 LOW BATTERY - SKREEM

When Monitored: Ignition ON.

Set Condition: When the SKREEM detects a low battery fault condition from the number 1 Sensor/Transmitter.

SENSOR 1 FAULT - SKREEM — Continued

TIRE SENSOR 2 LOW BATTERY - SKREEM

When Monitored: Ignition ON.

Set Condition: When the SKREEM detects a low battery fault condition from the number 2 Sensor/Transmitter.

TIRE SENSOR 3 LOW BATTERY - SKREEM

When Monitored: Ignition ON.

Set Condition: When the SKREEM detects a low battery fault condition from the number 3 Sensor/Transmitter.

TIRE SENSOR 4 LOW BATTERY - SKREEM

When Monitored: Ignition ON.

Set Condition: When the SKREEM detects a low battery fault condition from the number 4 Sensor/Transmitter.

POSSIBLE CAUSES
SENSOR/TRANSMITTER INTERNAL FAULT
SKREEM INTERNAL FAILURE

TEST	ACTION	APPLICABILITY
1	**NOTE: The below test is to locate the Tire Pressure Sensor/Transmitter.** **NOTE: If the tires have been rotated, the Tire Pressure Sensor/Transmitters are no longer in sequence from the factory. Faults are linked to Sensor/Transmitter ID's.** **NOTE: You must determine which Tire Pressure Sensor/Transmitter has set the fault or alert before diagnosing the system correctly.** **NOTE: Set ALL tire pressures to recommended specifications and recheck for faults/alerts.** The fault will set within two minutes when at 25 PSI. Starting with the left front wheel, deflate the tire down to 25 PSI. If the TPMS fault was detected and associated to this Sensor/Transmitter, it would correspond to the left front Sensor/Transmitter. If the TPMS fault was detected and not associated to this Sensor/Transmitter, repeat the process until the faulty Sensor/Transmitter has been identified. **NOTE: Once a fault/alert has set, it will establish the location of the Tire Pressure Sensors/Transmitter. Repeat steps until the applicable Tire Pressure Sensor/Transmitter has been located.** Perform this procedure prior to Symptom diagnosis. Continue Go To 2	All

SENSOR 1 FAULT - SKREEM — Continued

TEST	ACTION	APPLICABILITY
2	Cycle the ignition switch from OFF to ON. Record and erase DTC's. **NOTE: Adjust tire pressure to recommended specification.** Drive the vehicle for 10 minutes at 20 mph (32km/h). With the DRBIII®, read DTC's. Does the DRBIII® display a Sensor Fault or Tire Sensor Low Battery DTC? Yes → Replace and program the Tire Pressure Sensor/Transmitter in accordance with the Service Information. Perform TIRE PRESSURE VERIFICATION TEST - VER 1 - SKREEM. No → Go To 3	All
3	Drive the vehicle for 10 minutes at 20 mph (32km/h). Observe the TPMS indicator in the Instrument Cluster. Is the TPMS indicator illuminated? Yes → Replace and program the SKREEM in accordance with the Service Information. Perform TIRE PRESSURE VERIFICATION TEST - VER 1 - SKREEM. No → Test Complete.	All

Symptom:
BCM MESSAGES NOT RECEIVED (EXPORT ONLY)

When Monitored and Set Condition:

BCM MESSAGES NOT RECEIVED (EXPORT ONLY)

When Monitored: Continuously with the ignition on.

Set Condition: The Thatcham Alarm Module does not receive any messages from the BCM for at least 5 seconds.

POSSIBLE CAUSES
INTERMITTENT CONDITION
BCM COMMUNICATION FAILURE
PCI BUS CIRCUIT OPEN
THATCHAM ALARM MODULE - INTERNAL MALFUNCTION

TEST	ACTION	APPLICABILITY
1	Turn the ignition on. With the DRBIII®, attempt to communicate with the BCM. Was the DRBIII® able to communicate with the BCM? Yes → Go To 2 No → Refer to the Communication category and perform the appropriate symptom. Perform VTSS VERIFICATION TEST - 1A.	All
2	Turn the ignition on. With the DRBIII®, attempt to communicate with the Thatcham Alarm Module. Was the DRBIII® able to communicate with the Thatcham Alarm Module? Yes → The condition that caused this symptom is currently not present. Inspect the related wiring harness for a possible intermittent condition. Perform VTSS VERIFICATION TEST - 1A. No → Go To 3	All
3	Turn the ignition off. Disconnect the negative battery cable. Disconnect the Thatcham Alarm Module 16-way harness connector. Disconnect the DRBIII® from the data link connector. Measure the resistance of the PCI Bus circuit between the data link connector and the Thatcham Alarm Module connector. Is the resistance below 5.0 ohms? Yes → Replace the Thatcham Alarm Module. Perform VTSS VERIFICATION TEST - 1A. No → Repair the PCI Bus circuit for an open. Perform VTSS VERIFICATION TEST - 1A.	All

Symptom:
INTERNAL EEPROM WRITE ERROR (EXPORT ONLY)

When Monitored and Set Condition:

INTERNAL EEPROM WRITE ERROR (EXPORT ONLY)

When Monitored: During a EEPROM write event.

Set Condition: If the EEPROM write time exceeds 16ms.

POSSIBLE CAUSES
INTERMITTENT CONDITION
THATCHAM ALARM MODULE - INTERNAL MALFUNCTION

TEST	ACTION	APPLICABILITY
1	Turn the ignition on. With the DRBIII®, erase the current Thatcham Alarm Module DTC's. Turn the ignition off, wait 10 seconds then turn the ignition on. With the DRBIII®, read the current Thatcham Alarm Module DTC's. Does the DRBIII® display: INTERNAL EEPROM WRITE ERROR? Yes → Replace the Thatcham Alarm Module. Perform VTSS VERIFICATION TEST - 1A. No → The condition that caused this symptom is currently not present. Perform VTSS VERIFICATION TEST - 1A.	All

Symptom:
INTERNAL TRANSMIT FAILURE (EXPORT ONLY)

When Monitored and Set Condition:

INTERNAL TRANSMIT FAILURE (EXPORT ONLY)

When Monitored: Continuously with the ignition on during a message transmission.

Set Condition: After 8 internal attempts to transmit the Thatcham Alarm Module Bus messages.

POSSIBLE CAUSES
INTERMITTENT CONDITION
THATCHAM ALARM MODULE - INTERNAL MALFUNCTION

TEST	ACTION	APPLICABILITY
1	Turn the ignition on. With the DRBIII®, erase the current Thatcham Alarm Module DTC's. Turn the ignition off, wait 10 seconds then turn the ignition on. With the DRBIII®, read the current Thatcham Alarm Module DTC's. Does the DRBIII® display: INTERNAL TRANSMIT FAILURE? Yes → Replace the Thatcham Alarm Module. Perform VTSS VERIFICATION TEST - 1A. No → The condition that caused this symptom is currently not present. Inspect the related wiring harness for a possible intermittent condition. Perform VTSS VERIFICATION TEST - 1A.	All

Symptom:
INTERNAL ULTRASONIC FAULT (EXPORT ONLY)

When Monitored and Set Condition:

INTERNAL ULTRASONIC FAULT (EXPORT ONLY)

When Monitored: During the initial 6 seconds of an ignition on cycle.

Set Condition: After 5 consecutive ignition cycles without detecting any ultrasonic movement.

POSSIBLE CAUSES
FRONT INTRUSION SENSOR
FRONT INTRUSION SENSOR SIGNAL CIRCUIT OPEN
FRONT SENSOR GROUND CIRCUIT OPEN
INTRUSION SENSOR DETECTION
REAR INTRUSION SENSOR
REAR INTRUSION SENSOR SIGNAL CIRCUIT OPEN
REAR SENSOR GROUND CIRCUIT OPEN
THATCHAM ALARM MODULE - FRONT SENSOR GROUND
THATCHAM ALARM MODULE - FRONT SENSOR SIGNAL
THATCHAM ALARM MODULE - INTERNAL
THATCHAM ALARM MODULE - REAR SENSOR GROUND
THATCHAM ALARM MODULE - REAR SENSOR SIGNAL

TEST	ACTION	APPLICABILITY
1	Turn the ignition on. With the DRBIII®, erase the current Thatcham Alarm Module DTC's. Perform the following step 5 times. Turn the ignition off, wait 10 seconds then turn the ignition on. With the DRBIII®, read the current Thatcham Alarm Module DTC's. Does the DRBIII® display: INTERNAL ULTRASONIC FAULT? Yes → Go To 3 No → Go To 2	All

INTERNAL ULTRASONIC FAULT (EXPORT ONLY) — Continued

TEST	ACTION	APPLICABILITY
2	Turn the ignition off. **NOTE: The Intrusion Sensors will only detect movement during initial ignition on.** With the DRBIII®, select Intrusion Sensor Test. Turn the ignition on then wave arm inside the vehicle to simulate an intrusion. Does the DRBIII® show INTRUSION DETECTED when the ignition is initially turned on? Yes → The condition that caused this symptom is currently not present. Inspect the related wiring harness for a possible intermittent condition. Perform VTSS VERIFICATION TEST - 1A. No → Go To 3	All
3	Turn the ignition off. Disconnect the Front Intrusion Sensor connector. Connect a voltmeter to the Front Intrusion Sensor Signal circuit at the Intrusion Sensor connector. Turn the ignition on while observing the voltmeter. **NOTE: Voltage will only be present during the first 6 seconds when the ignition is turned on.** Is the voltage above 10.0 volts when the ignition is initially turned on? Yes → Go To 4 No → Go To 12	All
4	Turn the ignition off. Measure the resistance of the Sensor Ground circuit at the Front Intrusion Sensor connector. Is the resistance below 5.0 ohms? Yes → Go To 5 No → Go To 11	All
5	Replace the Front Intrusion Sensor with a known good sensor. With the DRBIII®, select Intrusion Sensor Test. Turn the ignition on then wave arm inside the vehicle to simulate an intrusion. Does the DRBIII® show INTRUSION DETECTED? Yes → Replace the Front Intrusion Sensor. Perform VTSS VERIFICATION TEST - 1A. No → Go To 6	All
6	Turn the ignition off. Disconnect the Rear Intrusion Sensor connector. Connect a voltmeter to the Rear Intrusion Sensor Signal circuit at the Intrusion Sensor connector. Turn the ignition on while observing the voltmeter. **NOTE: Voltage will only be present during the first 6 seconds when the ignition is turned on.** Is the voltage above 10.0 volts when the ignition is initially turned on? Yes → Go To 7 No → Go To 10	All

INTERNAL ULTRASONIC FAULT (EXPORT ONLY) — Continued

TEST	ACTION	APPLICABILITY
7	Turn the ignition off. Measure the resistance of the Sensor Ground circuit at the Rear Intrusion Sensor connector. Is the resistance below 5.0 ohms? Yes → Go To 8 No → Go To 9	All
8	Replace the Rear Intrusion Sensor with a known good sensor. With the DRBIII®, select Intrusion Sensor Test. Turn the ignition on then wave arm inside the vehicle to simulate an intrusion. Does the DRBIII® show INTRUSION DETECTED? Yes → Replace the Rear Intrusion Sensor. Perform VTSS VERIFICATION TEST - 1A. No → Replace the Thatcham Alarm Module. Perform VTSS VERIFICATION TEST - 1A.	All
9	Gain access to the Thatcham Alarm Module. Disconnect the Thatcham Alarm Module 16-way connector. Measure the resistance of the Sensor Ground circuit between the Thatcham Alarm Module connector and the Intrusion Sensor connector. Is the resistance below 5.0 ohms? Yes → Replace the Thatcham Alarm Module. Perform VTSS VERIFICATION TEST - 1A. No → Repair the Rear Sensor Ground circuit for an open. Perform VTSS VERIFICATION TEST - 1A.	All
10	Turn the ignition off. Gain access to the Thatcham Alarm Module 16-way connector. While back probing, measure the voltage of the Rear Intrusion Sensor Signal circuit at the Thatchem Alarm Module 16-way connector. Turn the ignition on while observing the voltmeter. **NOTE: Voltage will only be present during the first 6 seconds when the ignition is turned on.** Is the voltage above 10.0 volts when the ignition is initially turned on? Yes → Repair the Rear Intrusion Sensor Signal circuit for an open. Perform VTSS VERIFICATION TEST - 1A. No → Replace the Thatcham Alarm Module. Perform VTSS VERIFICATION TEST - 1A.	All
11	Gain access to the Thatcham Alarm Module. Disconnect the Thatcham Alarm Module 16-way connector. Measure the resistance of the Sensor Ground circuit between the Thatcham Alarm Module connector and the Front Intrusion Sensor connector. Is the resistance below 5.0 ohms? Yes → Replace the Thatcham Alarm Module. Perform VTSS VERIFICATION TEST - 1A. No → Repair the Front Sensor Ground circuit for an open. Perform VTSS VERIFICATION TEST - 1A.	All

INTERNAL ULTRASONIC FAULT (EXPORT ONLY) — Continued

TEST	ACTION	APPLICABILITY
12	Turn the ignition off. Gain access to the Thatcham Alarm Module 16-way connector. While back probing, measure the voltage of the Front Intrusion Sensor Signal circuit at the Thatcham Alarm Module 16-way connector. Turn the ignition on while observing the voltmeter. **NOTE: Voltage will only be present during the first 6 seconds when the ignition is turned on.** Is the voltage above 10.0 volts when the ignition is initially turned on? Yes → Repair the Front Intrusion Sensor Signal circuit for an open. Perform VTSS VERIFICATION TEST - 1A. No → Replace the Thatcham Alarm Module. Perform VTSS VERIFICATION TEST - 1A.	All

Symptom:
LOOPBACK ERROR (EXPORT ONLY)

When Monitored and Set Condition:

LOOPBACK ERROR (EXPORT ONLY)

When Monitored: During power up, following detection of any other Bus errors.

Set Condition: Internally transmitted message on the PCI Bus is not received correctly.

POSSIBLE CAUSES
INTERMITTENT CONDITION
THATCHAM ALARM MODULE - INTERNAL MALFUNCTION

TEST	ACTION	APPLICABILITY
1	Turn the ignition on. With the DRBIII®, erase the current Thatcham Alarm Module DTC's. Turn the ignition off, wait 10 seconds then turn the ignition on. With the DRBIII®, read the current Thatcham Alarm Module DTC's. Does the DRBIII® display: LOOPBACK ERROR? Yes → Replace the Thatcham Alarm Module. Perform VTSS VERIFICATION TEST - 1A. No → The condition that caused this symptom is currently not present. Perform VTSS VERIFICATION TEST - 1A.	All

Symptom:
NO VALID MESSAGES RECEIVED (EXPORT ONLY)

When Monitored and Set Condition:

NO VALID MESSAGES RECEIVED (EXPORT ONLY)

When Monitored: Continuously with the ignition on.

Set Condition: The Thatcham Alarm Module does not receive any valid messages on the PCI Bus for a minimum of 5 seconds.

POSSIBLE CAUSES
INTERMITTENT CONDITION
THATCHAM ALARM MODULE - INTERNAL MALFUNCTION

TEST	ACTION	APPLICABILITY
1	Turn the ignition on. With the DRBIII®, erase the current Thatcham Alarm Module DTC's. Turn the ignition off, wait 10 seconds then turn the ignition on. With the DRBIII®, read the current Thatcham Alarm Module DTC's. Does the DRBIII® display: NO VALID MESSAGES RECEIVED? Yes → Replace the Thatcham Alarm Module. Perform VTSS VERIFICATION TEST - 1A. No → The condition that caused this symptom is currently not present. Inspect the related wiring harness for a possible intermittent condition. Perform VTSS VERIFICATION TEST - 1A.	All

Symptom:
PCI BUS SHORTED TO BATTERY (EXPORT ONLY)

When Monitored and Set Condition:

PCI BUS SHORTED TO BATTERY (EXPORT ONLY)

When Monitored: Continuously with the ignition on.

Set Condition: The Thatcham Alarm Module has detected a short to battery voltage on the PCI Bus.

POSSIBLE CAUSES
PCI BUS MALFUNCTION
INTERMITTENT CONDITION

TEST	ACTION	APPLICABILITY
1	**NOTE: If this code is set and active it will be necessary to perform the PCI Bus Communication Failure symptom.** **NOTE: The conditions that set the DTC are not present at this time. The following list may help in identifying the intermittent condition.** Refer to any Technical Service Bulletins (TSB) that may apply. Visually inspect the related wiring harness. Look for any chafed, pierced, pinched, or partially broken wires. Visually inspect the related wiring harness connectors. Look for broken, bent, pushed out, or corroded terminals. Were any of the above conditions present? Yes → Repair as necessary. Perform VTSS VERIFICATION TEST - 1A. No → The condition that caused this symptom is currently not present. Inspect the related wiring harness for a possible intermittent condition. Look for any chafed, pierced, pinched or partially broken wires. Perform VTSS VERIFICATION TEST - 1A.	All

Symptom:
PCI BUS SHORTED TO GROUND (EXPORT ONLY)

When Monitored and Set Condition:

PCI BUS SHORTED TO GROUND (EXPORT ONLY)

When Monitored: Continuously with the ignition on.

Set Condition: The Thatcham Alarm Module has detected a short to ground on the PCI Bus.

POSSIBLE CAUSES
PCI BUS MALFUNCTION
INTERMITTENT CONDITION

TEST	ACTION	APPLICABILITY
1	**NOTE: If this code is set and active it will be necessary to perform the PCI Bus Communication Failure symptom.** **NOTE: The conditions that set the DTC are not present at this time. The following list may help in identifying the intermittent condition.** Refer to any Technical Service Bulletins (TSB) that may apply. Visually inspect the related wiring harness. Look for any chafed, pierced, pinched, or partially broken wires. Visually inspect the related wiring harness connectors. Look for broken, bent, pushed out, or corroded terminals. Were any of the above conditions present? Yes → Repair as necessary. Perform VTSS VERIFICATION TEST - 1A. No → The condition that caused this symptom is currently not present. Inspect the related wiring harness for a possible intermittent condition. Look for any chafed, pierced, pinched or partially broken wires. Perform VTSS VERIFICATION TEST - 1A.	All

Symptom:
PCM MESSAGES NOT RECEIVED (EXPORT ONLY)

When Monitored and Set Condition:

PCM MESSAGES NOT RECEIVED (EXPORT ONLY)

When Monitored: Continuously with the ignition on.

Set Condition: The Thatcham Alarm Module does not receive any messages from the PCM for at least 5 seconds.

POSSIBLE CAUSES
INTERMITTENT CONDITION
PCM COMMUNICATION FAILURE
PCI BUS CIRCUIT OPEN
THATCHAM ALARM MODULE - INTERNAL MALFUNCTION

TEST	ACTION	APPLICABILITY
1	Turn the ignition on. With the DRBIII®, attempt to communicate with the PCM. Was the DRBIII® able to communicate with the PCM? Yes → Go To 2 No → Refer to the Communication category and perform the appropriate symptom. Perform VTSS VERIFICATION TEST - 1A.	All
2	Turn the ignition on. With the DRBIII®, attempt to communicate with the Thatcham Alarm Module. Was the DRBIII® able to communicate with the Thatcham Alarm Module? Yes → The condition that caused this symptom is currently not present. Inspect the related wiring harness for a possible intermittent condition. Perform VTSS VERIFICATION TEST - 1A. No → Go To 3	All
3	Turn the ignition off. Disconnect the negative battery cable. Disconnect the Thatcham Alarm Module 16-way harness connector. Disconnect the DRBIII® from the data link connector. Measure the resistance of the PCI Bus circuit between the data link connector and the Thatcham Alarm Module connector. Is the resistance below 5.0 ohms? Yes → Replace the Thatcham Alarm Module. Perform VTSS VERIFICATION TEST - 1A. No → Repair the PCI Bus circuit for an open. Perform VTSS VERIFICATION TEST - 1A.	All

Symptom:
*ALARM TRIPS ON ITS OWN

POSSIBLE CAUSES
LAST VTSS CAUSE
ATTEMPT TO TRIP ALARM
INTERMITTENT CONDITION

TEST	ACTION	APPLICABILITY
1	With the DRBIII® in Inputs/Outputs, read the Last VTSS Cause state. Were there any causes displayed? Yes → Check for a possible intermittent condition with the circuit indicated by the DRBIII®. Perform VTSS VERIFICATION TEST - 1A. No → Go To 2	All
2	Is this an export vehicle equipped with a hood ajar switch? Yes → Go To 3 No → Go To 4	All
3	Remove the ignition key (but keep in hand). Lock the vehicle and close all the doors, liftgate and hood. Allow the VTSS to arm. Lightly tap on hood near ajar switch to simulate wind and noise vibration. Did the VTSS trip to the alarming state? Yes → Replace the hood ajar switch. Perform VTSS VERIFICATION TEST - 1A. No → Go To 4	All
4	**NOTE: The condition that caused the alarm is not present at this time. The following list may help in indentifying the intermittent condition.** Refer to any Technical Service Bulletins (TSB) that may apply. Visually inspect related wiring harnesses. Look for chafed, pierced, pinched, or partially broken wires. Visually inspect the related wiring harness connectors. Look for loose connections, broken, bent, pushed out, or corroded terminals. Were any of the above conditions present? Yes → Repair as necessary Perform VTSS VERIFICATION TEST - 1A. No → Test Complete.	All

Symptom:
*HOOD DOES NOT TRIP VTSS (EXPORT ONLY)

POSSIBLE CAUSES
CHECK DRBIII® FOR HOOD AJAR SWITCH RESPONSE
BODY CONTROL MODULE

TEST	ACTION	APPLICABILITY
1	**NOTE: For the results of this test to be valid, the security system must arm and flash the VTSS indicator properly.** With the DRBIII®, read the HOOD AJAR SW status. Open the hood. Does the DRBIII® display CLOSED? Yes → Replace the Body Control Module. Perform VTSS VERIFICATION TEST - 1A. No → Refer to symptom HOOD AJAR CKT OPEN in the DOOR AJAR category. Perform VTSS VERIFICATION TEST - 1A.	All

Symptom:

***LEFT FRONT DOOR DOES NOT TRIP VTSS**

POSSIBLE CAUSES
BODY CONTROL MODULE
CHECK DRBIII® FOR DRIVER DOOR AJAR RESPONSE

TEST	ACTION	APPLICABILITY
1	**NOTE: For the results of this test to be valid, the security system must arm and flash the VTSS indicator properly.** With the DRBIII®, read the DRVR DOOR AJAR SW status. Open the driver door. Does the DRBIII® display CLOSED? Yes → Replace the Body Control Module. Perform VTSS VERIFICATION TEST - 1A. No → Refer to symptom DRIVER DOOR AJAR CKT OPEN in the DOOR AJAR category. Perform VTSS VERIFICATION TEST - 1A.	All

Symptom:

***LEFT SLIDING DOOR DOES NOT TRIP VTSS**

POSSIBLE CAUSES
MONITOR DRBIII® FOR LEFT SLIDING DOOR AJAR STATUS
BODY CONTROL MODULE

TEST	ACTION	APPLICABILITY
1	**NOTE: For the results of this test to be valid, the security system must arm and flash the VTSS indicator properly.** With the DRBIII®, read the LSLIDE DR AJAR SW status. Open the left sliding door. Does the DRBIII® display the switch state as CLOSED? Yes → Replace the Body Control Module. Perform VTSS VERIFICATION TEST - 1A. No → Refer to symptom LEFT SLIDING DOOR AJAR CKT OPEN in the DOOR AJAR category. Perform VTSS VERIFICATION TEST - 1A.	All

Symptom:
*LIFTGATE DOES NOT TRIP VTSS (EXPORT ONLY)

POSSIBLE CAUSES
CHECK DRBIII® FOR LIFTGATE SW RESPONSE
BODY CONTROL MODULE

TEST	ACTION	APPLICABILITY
1	**NOTE: For the results of this test to be valid, the security system must arm and flash the VTSS indicator properly.** With the DRBIII®, read the LIFTGATE AJAR SW status. Open the liftgate. Does the DRBIII® display CLOSED? Yes → Replace the Body Control Module. Perform VTSS VERIFICATION TEST - 1A. No → Refer to symptom LIFTGATE AJAR CKT OPEN in the DOOR AJAR category. Perform VTSS VERIFICATION TEST - 1A.	All

Symptom:

***REPEATER LAMPS INOPERATIVE WITH ALARM (EXPORT ONLY)**

POSSIBLE CAUSES
HAZARD SWITCH SENSE CIRCUIT OPEN
REPEATER LAMPS INOPERATIVE
HAZARD SWITCH SENSE CIRCUIT OPEN
THATCHAM ALARM MODULE - INTERNAL MALFUNCTION

TEST	ACTION	APPLICABILITY
1	With the DRBIII®, actuate the Hazard Lamps. Do the Hazard Lamps light while actuating? Yes → Go To 2 No → Refer to the appropriate Service Information to repair the Hazard Lamps. Perform VTSS VERIFICATION TEST - 1A.	All
2	Turn the hazard lamp switch on. Do the Hazard Lamps operate? Yes → Go To 3 No → Repair the Hazard Switch Sense circuit for an open between the BCM and the splice. Perform VTSS VERIFICATION TEST - 1A.	All
3	Gain access to the Thatcham Alarm Module. Disconnect the Thatcham Alarm Module 16-way harness connector. Connect a jumper wire between the Hazard Switch Sense of the Thatcham Alarm Module connector and ground. Do the hazard lamps light with the jumper wire connected? Yes → Replace the Thatcham Alarm Module. Perform VTSS VERIFICATION TEST - 1A. No → Repair the Hazard Switch Sense circuit for an open between the Thatcham Alarm Module and the splice. Perform VTSS VERIFICATION TEST - 1A.	All

Symptom:
*RIGHT FRONT DOOR DOES NOT TRIP VTSS

POSSIBLE CAUSES
CHECK DRBIII® FOR PASSENGER DOOR AJAR RESPONSE
BODY CONTROL MODULE

TEST	ACTION	APPLICABILITY
1	**NOTE: For the results of this test to be valid, the security system must arm and flash the VTSS indicator properly.** With the DRBIII®, read the PASS DOOR AJAR SW status. Open the passenger door. Does the DRBIII® display CLOSED? Yes → Replace the Body Control Module. Perform VTSS VERIFICATION TEST - 1A. No → Refer to symptom PASSENGER DOOR AJAR CKT OPEN in the DOOR AJAR category. Perform VTSS VERIFICATION TEST - 1A.	All

Symptom:
*RIGHT SLIDING DOOR DOES NOT TRIP VTSS

POSSIBLE CAUSES
CHECK DRBIII® FOR RIGHT REAR DOOR AJAR RESPONSE
BODY CONTROL MODULE

TEST	ACTION	APPLICABILITY
1	**NOTE: For the results of this test to be valid, the security system must arm and flash the VTSS indicator properly.** With the DRBIII®, read the RSLIDE DR AJAR SW status. Open the right sliding door. Does the DRBIII® display CLOSED? Yes → Replace the Body Control Module. Perform VTSS VERIFICATION TEST - 1A. No → Refer to symptom RIGHT SLIDING DOOR AJAR CKT OPEN in the DOOR AJAR category. Perform VTSS VERIFICATION TEST - 1A.	All

Symptom:
*VTSS INDICATOR LAMP INOPERATIVE (EXPORT ONLY)

POSSIBLE CAUSES
THATCHAM ALARM MODULE - INTERNAL MALFUNCTION
VTSS INDICATOR SUPPLY CIRCUIT OPEN
OPEN VTSS LED
VTSS INDICATOR DRIVER CIRCUIT OPEN
THATCHAM ALARM MODULE - INTERNAL MALFUNCTION

TEST	ACTION	APPLICABILITY
1	With the DRBIII®, actuate the VTSS INDICATOR LAMP. Does the VTSS Indicator Lamp flash while actuating. Yes → Replace the Thatcham Alarm Module. Perform VTSS VERIFICATION TEST - 1A. No → Go To 2	All
2	Disconnect the VTSS Indicator Lamp harness connector. Measure the voltage of the VTSS Indicator Supply circuit. Is the voltage above 10.0 volts? Yes → Go To 3 No → Repair the VTSS Indicator Supply circuit for an open. Perform VTSS VERIFICATION TEST - 1A.	All
3	Disconnect the VTSS Indicator Lamp harness connector. With a 12-volt test light connected to 12-volts, connect the test light probe to the VTSS Indicator Driver circuit. Turn the ignition on. With the DRBIII® in Vehicle Theft, actuate the VTSS Indicator lamp. Does the test light illuminate when the VTSS Indicator lamp is actuated? Yes → Replace the VTSS Indicator LED Lamp. Perform VTSS VERIFICATION TEST - 1A. No → Go To 4	All
4	Disconnect the VTSS Indicator Lamp harness connector. Disconnect the Thatcham Alarm Module harness connector. Measure the resistance of the VTSS Indicator Driver circuit. Is the resistance below 5.0 ohms? Yes → Replace the Thatcham Alarm Module. Perform VTSS VERIFICATION TEST - 1A. No → Repair the VTSS Indicator Driver circuit for an open. Perform VTSS VERIFICATION TEST - 1A.	All

Symptom:

*VTSS SIREN INOP (EXPORT ONLY)

POSSIBLE CAUSES
INTERMITTENT CONDITION
SIREN FUSED B(+) CIRCUIT OPEN
SIREN SIGNAL CONTROL CIRCUIT OPEN
VTSS SIREN
OPEN GROUND CIRCUIT
THATCHAM ALARM MODULE - INTERNAL MALFUNCTION

TEST	ACTION	APPLICABILITY
1	With the DRBIII®, actuate the VTSS Siren. Does the Siren sound while actuating? Yes → The condition that caused this symptom is currently not present. Inspect the related wiring harness for a possible intermittent condition. Look for any chafed, pierced, pinched or partially broken wires. Perform VTSS VERIFICATION TEST - 1A. No → Go To 2	All
2	Gain access to the VTSS Siren. Disconnect the Siren connector. Turn the ignition on. Measure the voltage of the Fused B(+) circuit (cavity 3) in the Siren connector. Is the voltage above 10.0 volts? Yes → Go To 3 No → Repair the Fused B(+) circuit for an open. Perform VTSS VERIFICATION TEST - 1A.	All
3	With the VTSS Siren connector disconnected. Measure the resistance of the ground circuit. Is the resistance below 5.0 ohms? Yes → Go To 4 No → Repair the ground circuit for an open. Perform VTSS VERIFICATION TEST - 1A.	All
4	With the VTSS Siren connector disconnected. Turn the ignition on. Measure the voltage of the Siren Signal Control circuit (cavity 2) in the VTSS Siren connector. Is the voltage approximately 5.0 volts +/- 1.0 volt? Yes → Replace the VTSS Siren. Perform VTSS VERIFICATION TEST - 1A. No → Go To 5	All

*VTSS SIREN INOP (EXPORT ONLY) — Continued

TEST	ACTION	APPLICABILITY
5	Gain access to the Thatcham Alarm Module 16-way harness connector. While back probing, measure the voltage of the Siren Signal Control circuit. Turn the ignition on. Is the voltage approximately 5.0 volts? Yes → Repair the Siren Signal Control circuit for an open. Perform VTSS VERIFICATION TEST - 1A. No → Replace the Thatcham Alarm Module. Perform VTSS VERIFICATION TEST - 1A.	All

Symptom:

***VTSS WILL NOT ARM**

POSSIBLE CAUSES
CHECK THE VTSS STATUS
CHECK FOR BCM DTCS AND VTSS ARMING INHIBITORS
CHECK FOR PCI BUS COMMUNICATION OF INSTRUMENT CLUSTER AND SKIM
BODY CONTROL MODULE

TEST	ACTION	APPLICABILITY
1	With the DRBIII® in BCM, select Miscellaneous Function and check that the Theft Alarm is enabled. Was the Theft Alarm enabled? Yes → Go To 2 No → With the DRBIII®, enable the Vehicle Theft Security System (VTSS). Perform VTSS VERIFICATION TEST - 1A.	All
2	With the DRBIII®, attempt to read the Module Display of the Instrument Cluster and also the Sentry Key Immobilizer Module. Was the DRBIII® able to display the module information of the MIC and SKIM? Yes → Go To 3 No → Refer to the Symptom List and diagnose the appropriate symptom in the Communication category. Perform VTSS VERIFICATION TEST - 1A.	All
3	Ensure all doors and hood (export only) are closed. With the DRBIII®, read the active DTC's and the ajar switch states. Does the DRBIII® display any closed switches or VTSS related DTC's? Yes → Refer to the Symptom List and diagnose the appropriate symptom in the DOOR AJAR or VTSS category. Perform VTSS VERIFICATION TEST - 1A. No → Replace the Body Control Module. Perform BODY VERIFICATION TEST - VER 1.	All

Symptom:
FR WIPER HI-LO RELAY OPEN

POSSIBLE CAUSES
FUSED B(+) CIRCUIT
COMMON CIRCUIT OPEN
WIPER HI/LOW RELAY
WIPER ON/OFF RELAY
WIPER HI/LOW RELAY CONTROL CIRCUIT OPEN
FCM-ON/OFF RELAY DRIVER OPEN

TEST	ACTION	APPLICABILITY
1	Turn the ignition off. Remove the Wiper On/Off Relay from the PDC. Using a 12-volt test light connected to ground, probe both Fused B(+) circuits in the PDC. **NOTE: The test light must illuminate brightly. Compare the brightness to that of a direct connection to the battery.** Does the test light illuminate brightly at each terminal? Yes → Go To 2 No → Repair the Fused B(+) circuit(s) for an open. Perform BODY VERIFICATION TEST - VER 1.	All
2	Install a substitute relay in place of the Wiper On/Off Relay. Turn the ignition on. Turn the wipers on. Does the system operate correctly? Yes → Replace the Wiper On/Off Relay. Perform BODY VERIFICATION TEST - VER 1. No → Go To 3	All
3	Turn the ignition off. Remove the wiper High/Low Relay from the PDC. Remove the wiper On/Off Relay from the PDC. Measure the resistance of the Common circuit between the High/Low Relay and the On/Off relay in the PDC. Is the resistance below 10.0 ohms? Yes → Go To 4 No → Repair the Common circuit for an open. Perform BODY VERIFICATION TEST - VER 1.	All
4	Install a substitute relay in place of the Wiper Hi/Low Relay. Turn the ignition on. Turn the wipers on. Does the system operate correctly? Yes → Replace the Wiper Hi/Low Relay. Perform BODY VERIFICATION TEST - VER 1. No → Go To 5	All

FR WIPER HI-LO RELAY OPEN — Continued

TEST	ACTION	APPLICABILITY
5	Turn the ignition off. Remove the Wiper Hi/Low Relay from the PDC. Disconnect the FCM from the IPM. Connect a jumper wire between the Wiper Hi/Low Relay Control circuit at the IPM connector to ground. Measure the resistance between ground and the Wiper Hi/Low Relay Control circuit in the PDC. Is the resistance below 5.0 ohms? Yes → Replace the Front Control Module. Perform BODY VERIFICATION TEST - VER 1. No → Repair the Wiper Hi/Low Relay Control circuit for an open. Perform BODY VERIFICATION TEST - VER 1.	All

Symptom:

FR WIPER HI-LO RELAY SHORT TO BATT

POSSIBLE CAUSES
WIPER HI/LOW RELAY
WIPER HI/LOW RELAY CONTROL CIRCUIT SHORTED TO VOLTAGE
FCM

TEST	ACTION	APPLICABILITY
1	Turn the ignition off. Remove the Wiper Hi/Low Relay from the PDC. Disconnect the FCM from the IPM. Turn the ignition on. Measure the voltage of the Wiper Hi/Low Relay Control circuit at the PDC connector. Is the voltage above 1.0 volt? Yes → Repair the Wiper Hi/Low Relay Control circuit for a short to voltage. Perform BODY VERIFICATION TEST - VER 1. No → Go To 2	All
2	Install a substitute relay in place of the Wiper Hi/Low Relay. Turn the ignition on. Turn the wipers on. Does the system operate correctly? Yes → Replace the Wiper Hi/Low Relay. Perform BODY VERIFICATION TEST - VER 1. No → Replace the Front Control Module. Perform BODY VERIFICATION TEST - VER 1.	All

Symptom:

FRONT WASH SWITCH INPUT STUCK

POSSIBLE CAUSES
HIGH BEAM/FRONT WASHER SWITCH MUX CIRCUIT SHORTED TO GROUND
MULTI-FUNCTION SWITCH
WIRING HARNESS INSPECTION
FCM

TEST	ACTION	APPLICABILITY
1	Turn the ignition on. With the DRB, select Body, Front Control Module and read the F Washer Switch state. Does the DRB display switch state as Closed? Yes → Go To 2 No → Go To 4	All
2	Turn the ignition off. Disconnect the Multi-Function Switch harness connector. Turn the ignition on. With the DRB, select Body, Front Control Module and read the F Washer Switch state. Does the DRB display switch state as Open? Yes → Replace the Multi-Function Switch. Perform BODY VERIFICATION TEST - VER 1. No → Go To 3	All
3	Turn the ignition off. Disconnect the Multi-Function Switch harness connector. Disconnect the applicable BCM harness connector. Measure the resistance between ground and the High Beam/Front Washer Switch MUX circuit. Is the resistance below 1000.0 ohms? Yes → Repair the High Beam/Front Washer Switch MUX circuit for a short to ground. Perform BODY VERIFICATION TEST - VER 1. No → Replace the Front Control Module. Perform BODY VERIFICATION TEST - VER 1.	All

FRONT WASH SWITCH INPUT STUCK — Continued

TEST	ACTION	APPLICABILITY
4	Turn the ignition on. With the DRBIII®, erase all BCM and FCM DTCs. Turn the ignition off. **NOTE: Visually inspect the related wiring harness and circuits. Look for any chafed, pierced, pinched, or partially broken wires.** **NOTE: Visually inspect the related wiring harness connectors. Look for broken, bent, pushed out, or corroded terminals.** **Note: Refer to any Technical Service Bulletins (TSB) that may apply.** Were any problems found? Yes → Repair as necessary. Perform BODY VERIFICATION TEST - VER 1. No → Test Complete.	All

Symptom:

FRONT WIPER NOT PARKED

POSSIBLE CAUSES
FRONT CONTROL MODULE
FRONT WIPER MODULE
MECHANICAL PROBLEM
WIRING HARNESS INSPECTION
FRONT WIPER PARK SWITCH SENSE CIRCUIT OPEN

TEST	ACTION	APPLICABILITY
1	Turn the ignition on. With the DRB, select Body, Front Control Module, Inputs/Outputs and read the Wiper Park Sw state. Does the DRB display Closed? Yes → Go To 2 No → Go To 3	All
2	Turn the ignition on. With the DRBIII®, erase all BCM and FCM DTCs. Turn the ignition off. **NOTE: Visually inspect the related wiring harness and circuits. Look for any chafed, pierced, pinched, or partially broken wires.** **NOTE: Visually inspect the related wiring harness connectors. Look for broken, bent, pushed out, or corroded terminals.** **Note: Refer to any Technical Service Bulletins (TSB) that may apply.** Were any problems found? Yes → Repair as necessary. Perform BODY VERIFICATION TEST - VER 1. No → Test Complete.	All
3	Turn the ignition off. Inspect all of the moving components associated with the Front Wiper system. Look for broken or damaged components which may prevent the wipers from parking properly. Are the any mechanical problems? Yes → Repair as necessary. Perform BODY VERIFICATION TEST - VER 1. No → Go To 4	All

FRONT WIPER NOT PARKED — Continued

TEST	ACTION	APPLICABILITY
4	Turn the ignition off. Disconnect the Front Wiper Module harness connector. Turn the ignition on. With the DRB, select Body, Body Computer then Inputs/Outputs and read the Wiper Park Sw state. Connect one end of a jumper wire to the Front Wiper Park Switch Sense circuit at the Front Wiper Module harness connector. Momentarily connect the other end of the jumper wire to ground. Repeat this several times. Did the Switch state change between Open and Closed when connecting and disconnecting the jumper? Yes → Replace the Front Wiper Module. Perform BODY VERIFICATION TEST - VER 1. No → Go To 5	All
5	Turn the ignition off. Disconnect the Front Wiper Module harness connector. Disconnect the FCM from the IPM. Measure the resistance of the Front Wiper Park Switch Sense circuit. Is the resistance below 10.0 ohms? Yes → Replace the Front Control Module. Perform BODY VERIFICATION TEST - VER 1. No → Repair the Front Wiper Park Switch Sense circuit for an open. Perform BODY VERIFICATION TEST - VER 1.	All

Symptom:
FRONT WIPER ON RELAY OPEN

POSSIBLE CAUSES
FUSED B(+) CIRCUIT
WIPER ON/OFF RELAY
WIPER ON/OFF RELAY CONTROL CIRCUIT OPEN
FCM-ON/OFF RELAY DRIVER OPEN

TEST	ACTION	APPLICABILITY
1	Turn the ignition off. Remove the Wiper On/Off Relay from the PDC. Using a 12-volt test light connected to ground, probe both Fused B(+) circuits in the PDC. **NOTE: The test light must illuminate brightly. Compare the brightness to that of a direct connection to the battery.** Does the test light illuminate brightly at each terminal? Yes → Go To 2 No → Repair the Fused B(+) circuit(s) for an open. Perform BODY VERIFICATION TEST - VER 1.	All
2	Install a substitute relay in place of the Wiper On/Off Relay. Turn the ignition on. Turn the wipers on. Does the system operate correctly? Yes → Replace the Wiper On/Off Relay. Perform BODY VERIFICATION TEST - VER 1. No → Go To 3	All
3	Turn the ignition off. Remove the Wiper On/Off Relay from the PDC. Disconnect the FCM from the IPM. Connect a jumper wire between the Wiper On/Off Relay Control circuit at the IPM connector to ground. Measure the resistance between ground and the Wiper On/Off Relay Control circuit in the PDC. Is the resistance below 5.0 ohms? Yes → Replace the Front Control Module. Perform BODY VERIFICATION TEST - VER 1. No → Repair the Wiper On/Off Relay Control circuit for an open. Perform BODY VERIFICATION TEST - VER 1.	All

Symptom:

FRONT WIPER ON RELAY SHORT TO BATT

POSSIBLE CAUSES
WIPER ON/OFF RELAY
WIPER ON/OFF RELAY CONTROL CIRCUIT SHORTED TO VOLTAGE
FCM

TEST	ACTION	APPLICABILITY
1	Turn the ignition off. Remove the Wiper On/Off Relay from the PDC. Disconnect the FCM from the IPM. Turn the ignition on. Measure the voltage of the Wiper On/Off Relay Control circuit at the PDC connector. Is the voltage above 1.0 volt? Yes → Repair the Wiper On/Off Relay Control circuit for a short to voltage. Perform BODY VERIFICATION TEST - VER 1. No → Go To 2	All
2	Install a substitute relay in place of the Wiper On/Off Relay. Turn the ignition on. Turn the wipers on. Does the system operate correctly? Yes → Replace the Wiper On/Off Relay. Perform BODY VERIFICATION TEST - VER 1. No → Replace the Front Control Module. Perform BODY VERIFICATION TEST - VER 1.	All

Symptom:
FRONT WIPER PARK SWITCH SHORT TO GND

POSSIBLE CAUSES
FRONT CONTROL MODULE
FRONT WIPER MODULE
WIRING HARNESS INSPECTION
FRONT WIPER PARK SWITCH SENSE CIRCUIT SHORTED TO GROUND

TEST	ACTION	APPLICABILITY
1	Turn the ignition on. Turn the Wipers on one of the intermittent settings. With the DRB, select Body, Front Control Module, Inputs/Outputs and read the Wiper Park Sw state. Does the switch state change from Open to Closed during wiper operation? Yes → Go To 2 No → Go To 3	All
2	Turn the ignition on. With the DRBIII®, erase all BCM and FCM DTCs. Turn the ignition off. **NOTE: Visually inspect the related wiring harness and circuits. Look for any chafed, pierced, pinched, or partially broken wires.** **NOTE: Visually inspect the related wiring harness connectors. Look for broken, bent, pushed out, or corroded terminals.** **Note: Refer to any Technical Service Bulletins (TSB) that may apply.** Were any problems found? Yes → Repair as necessary. Perform BODY VERIFICATION TEST - VER 1. No → Test Complete.	All
3	Turn the ignition off. Disconnect the Front Wiper Module harness connector. Disconnect the FCM from the IPM. Measure the resistance between ground and the Front Wiper Park Switch Sense circuit. Is the resistance below 1000.0 ohms? Yes → Repair the Front Wiper Park Switch Sense circuit for a short to ground. Perform BODY VERIFICATION TEST - VER 1. No → Go To 4	All

FRONT WIPER PARK SWITCH SHORT TO GND — Continued

TEST	ACTION	APPLICABILITY
4	Turn the ignition on. Turn the front wipers to an intermittent setting. Using a 12-volt test light connected to 12-volts, back probe the Front Wiper Park Switch Sense circuit at the Front Wiper Module harness connector. **NOTE: The test light should illuminate when the wipers are parked, then turn off when the wipers move off of the parked position.** Does the test light turn on and off properly? Yes → Replace the Front Control Module. Perform BODY VERIFICATION TEST - VER 1. No → Replace the Front Wiper Module. Perform BODY VERIFICATION TEST - VER 1.	All

Symptom:

FRONT WIPER SWITCH MUX INPUT OPEN

POSSIBLE CAUSES
WIRING HARNESS INSPECTION
WINDSHIELD WIPER SWITCH MUX CIRCUIT OPEN
MULTIFUNCTION SWITCH MUX RETURN CIRCUIT OPEN
WIPER MUX CIRCUIT SHORTED TO VOLTAGE
BCM
MULTI-FUNCTION SWITCH

TEST	ACTION	APPLICABILITY
1	Turn the ignition on. With the DRB, select Body, Body Controller and read the Front Wiper Sw volts. Is the voltage above 4.8 volts? Yes → Go To 2 No → Go To 6	All
2	Turn the ignition off. Disconnect the Multi-Function Switch harness connector. Disconnect the applicable BCM harness connector. Measure the resistance of the Front Wiper Switch MUX circuit between the BCM harness connector and the Multi-Function Switch harness connector. Is the resistance below 5.0 ohms? Yes → Go To 3 No → Repair the Front Wiper Switch MUX circuit for an open. Perform BODY VERIFICATION TEST - VER 1.	All
3	Turn the ignition off. Disconnect the Multi-Function Switch harness connector. Disconnect the applicable BCM harness connector. Measure the resistance of the Multi-Function Switch MUX Return circuit between the BCM harness connector and the Multi-Function Switch harness connector. Is the resistance below 5.0 ohms? Yes → Go To 4 No → Repair the Multi-Function Switch MUX Return circuit for an open. Perform BODY VERIFICATION TEST - VER 1.	All
4	Turn the ignition off. Disconnect the Multi-Function Switch harness connector. Disconnect the applicable BCM harness connector. Turn the ignition on. Measure the voltage of the Front Wiper MUX Switch Signal circuit. Is the voltage above 1.0 volt? Yes → Repair the Front Wiper Switch MUX circuit for a short to voltage. Perform BODY VERIFICATION TEST - VER 1. No → Go To 5	All

FRONT WIPER SWITCH MUX INPUT OPEN — Continued

TEST	ACTION	APPLICABILITY
5	Turn the ignition off. Disconnect the Multi-Function Switch harness connector. Turn the ignition on. Connect a jumper wire between the Front Wiper Switch MUX circuit and the Mulit-Function Switch MUX Return circuit. With the DRB, read the Front Wiper Sw volts? Is the voltage below 0.5 volt? Yes → Replace the Multi-Function Switch. Perform BODY VERIFICATION TEST - VER 1. No → Replace the Body Control Module. Perform BODY VERIFICATION TEST - VER 1.	All
6	Turn the ignition on. With the DRBIII®, erase all BCM and FCM DTCs. Turn the ignition off. **NOTE: Visually inspect the related wiring harness and circuits. Look for any chafed, pierced, pinched, or partially broken wires.** **NOTE: Visually inspect the related wiring harness connectors. Look for broken, bent, pushed out, or corroded terminals.** **Note: Refer to any Technical Service Bulletins (TSB) that may apply.** Were any problems found? Yes → Repair as necessary. Perform BODY VERIFICATION TEST - VER 1. No → Test Complete.	All

Symptom:
FRONT WIPER SWITCH MUX INPUT SHORT TO GROUND

POSSIBLE CAUSES
BCM
WIRING HARNESS INSPECTION
FRONT WIPER SWITCH MUX CIRCUIT SHORTED TO GROUND
FRONT WIPER SWITCH MUX CIRCUIT SHORTED TO M/F MUX RETURN CIRCUIT
MULTI-FUNCTION SWITCH

TEST	ACTION	APPLICABILITY
1	Turn the ignition on. With the DRB, select Body, Body Controller and read the Front Wiper Sw volts? Is the voltage above 0.3 volt? Yes → Go To 2 No → Go To 3	All
2	Turn the ignition on. With the DRBIII®, erase all BCM and FCM DTCs. Turn the ignition off. **NOTE: Visually inspect the related wiring harness and circuits. Look for any chafed, pierced, pinched, or partially broken wires.** **NOTE: Visually inspect the related wiring harness connectors. Look for broken, bent, pushed out, or corroded terminals.** **Note: Refer to any Technical Service Bulletins (TSB) that may apply.** Were any problems found? Yes → Repair as necessary. Perform BODY VERIFICATION TEST - VER 1. No → Test Complete.	All
3	Turn the ignition off. Disconnect the Multi-Function Switch harness connector. Disconnect the applicable BCM harness connector. Measure the resistance of the Front Wiper Switch MUX circuit between the BCM harness connector and ground. Is the resistance below 1000.0 ohms? Yes → Repair the Front Wiper Switch MUX circuit for a short to ground. Perform BODY VERIFICATION TEST - VER 1. No → Go To 4	All

FRONT WIPER SWITCH MUX INPUT SHORT TO GROUND — Continued

TEST	ACTION	APPLICABILITY
4	Turn the ignition off. Disconnect the Multi-Function Switch harness connector. Disconnect the applicable BCM harness connector. Measure the between the Front Wiper Switch MUX circuit and the Multi-Function Switch MUX Return circuit. Is the resistance below 1000.0 ohms? Yes → Repair the Front Wiper Switch MUX circuit for a short to the Multi-Function Switch MUX Return circuit. Perform BODY VERIFICATION TEST - VER 1. No → Go To 5	All
5	Turn the ignition off. Disconnect the Multi-Function Switch harness connector. Turn the ignition on. With the DRB, read the Front Wiper Sw volts? Is the voltage above 4.5 volts? Yes → Replace the Multi-Function Switch. Perform BODY VERIFICATION TEST - VER 1. No → Replace the Body Control Module. Perform BODY VERIFICATION TEST - VER 1.	All

Symptom:

HEADLAMP WASHER RELAY OPEN

POSSIBLE CAUSES
OPEN GROUND CIRCUIT
FUSED B+ CIRCUIT OPEN
HEADLAMP WASHER RELAY CONTROL CIRCUIT OPEN
HEADLAMP WASHER RELAY OUTPUT CIRCUIT OPEN
HEADLAMP WASHER PUMP MOTOR
HEADLAMP WASHER RELAY
FRONT CONTROL MODULE

TEST	ACTION	APPLICABILITY
1	Turn the ignition off. Disconnect the Washer Pump connector. Measure the resistance of the Washer Pump ground circuit. Is the resistance below 5.0 ohms? Yes → Go To 2 No → Repair the open Washer Pump ground circuit. Perform BODY VERIFICATION TEST - VER 1.	All
2	Turn the ignition on. Disconnect the Headlamp Washer Relay. Measure the voltage of the Fused B+ Circuit. Is the voltage above 10.0 volts? Yes → Go To 3 No → Repair the Fused B+ Circuit for an open condition. Perform BODY VERIFICATION TEST - VER 1.	All
3	Turn the ignition off. Disconnect the Headlamp Washer Relay. Disconnect the FCM harness connector. Measure the resistance of the Headlamp Washer Relay Control Circuit. Is the resistance below 5.0 ohms? Yes → Go To 4 No → Repair the Headlamp Washer Relay Control Circuit for an open. Perform BODY VERIFICATION TEST - VER 1.	All
4	Disconnect the Headlamp Washer Relay. Disconnect the Headlamp Washer Pump Motor. Measure the resistance of the Headlamp Washer Relay Output Circuit. Is the resistance below 5.0 ohms? Yes → Go To 5 No → Repair the Headlamp Washer Relay Output Circuit for an open. Perform BODY VERIFICATION TEST - VER 1.	All

HEADLAMP WASHER RELAY OPEN — Continued

TEST	ACTION	APPLICABILITY
5	Turn the ignition on. Disconnect the Headlamp Washer Pump Motor connector. Actuate the washers. Measure the voltage of the Washer Pump Output Circuit. Is the voltage above 10.0 volts? Yes → Replace the Headlamp Washer Pump Motor. Perform BODY VERIFICATION TEST - VER 1. No → Go To 6	All
6	Turn the ignition off. Install a known good relay in place of the Headlamp Washer Relay. Turn the Washers on. Do the Headlamp Washers operate normally? Yes → Replace the Headlamp Washer Relay. Perform BODY VERIFICATION TEST - VER 1. No → Replace the Front Control Module. Perform BODY VERIFICATION TEST - VER 1.	All

Symptom:

HEADLAMP WASHER RELAY SHORT TO BATT

POSSIBLE CAUSES
FUSED B+ CIRCUIT OPEN
HEADLAMP WASHER RELAY CONTROL CIRCUIT OPEN
HEADLAMP WASHER PUMP MOTOR
HEADLAMP WASHER RELAY
FRONT CONTROL MODULE

TEST	ACTION	APPLICABILITY
1	Turn the ignition on. Disconnect the Headlamp Washer Relay. Measure the voltage of the Fused B+ Circuit. Is the voltage above 10.0 volts? Yes → Go To 2 No → Repair the Fused B+ Circuit for an open condition. Perform BODY VERIFICATION TEST - VER 1.	All
2	Turn the ignition off. Disconnect the Headlamp Washer Relay. Disconnect the FCM harness connector. Measure the resistance of the Headlamp Washer Relay Control Circuit. Is the resistance below 5.0 ohms? Yes → Go To 3 No → Repair the Headlamp Washer Relay Control Circuit for an open. Perform BODY VERIFICATION TEST - VER 1.	All
3	Turn the ignition on. Disconnect the Headlamp Washer Pump Motor connector. Actuate the washers. Measure the voltage of the Washer Pump Output Circuit. Is the voltage above 10.0 volts? Yes → Replace the Headlamp Washer Pump Motor. Perform BODY VERIFICATION TEST - VER 1. No → Go To 4	All
4	Turn the ignition off. Install a known good relay in place of the Headlamp Washer Relay. Turn the Washers on. Do the Headlamp Washers operate normally? Yes → Replace the Headlamp Washer Relay. Perform BODY VERIFICATION TEST - VER 1. No → Replace the Front Control Module. Perform BODY VERIFICATION TEST - VER 1.	All

Symptom:
HIGH VOLTAGE-DISABLE FRONT/REAR WASHERS

POSSIBLE CAUSES
CHARGING SYSTEM OVER VOLTAGE

TEST	ACTION	APPLICABILITY
1	NOTE: The condition that causes this DTC is when the system voltage exceeds 16 volts. The system will re-set after the voltage falls to below 15 volts. The FCM protects the circuits from the over voltage condition. Turn the ignition on. Measure the voltage of the Washer Pump Motor Control circuits. Is the voltage above 16.0 volts? Yes → Repair the Over Voltage concern to the Front Control Module. Perform BODY VERIFICATION TEST - VER 1. No → Test Complete.	All

Symptom:

REAR WASH SWITCH INPUT STUCK

When Monitored and Set Condition:

REAR WASH SWITCH INPUT STUCK

When Monitored: Ignition ON

Set Condition: Switch is applied for more than 10 seconds.

POSSIBLE CAUSES
REAR WASHER SWITCH STUCK
INTERMITTENT WIRING AND CONNECTORS

TEST	ACTION	APPLICABILITY
1	Turn the ignition on. With the DRB, select Body, Body Control Module and read the R Washer Switch state. Does the DRB display switch state as Closed? Yes → Go To 2 No → Go To 3	All
2	Turn the ignition off. Disconnect the Rear Washer Switch harness connector. Turn the ignition on. With the DRB, select Body, Body Control Module and read the R Washer Switch state. Does the DRB display switch state as Open? Yes → Replace the Rear Washer Switch in accordance with the Service Information. Perform BODY VERIFICATION TEST - VER 1. No → Go To 3	All
3	Turn the ignition on. With the DRBIII®, erase all BCM and FCM DTCs. Turn the ignition off. The conditions necessary to set this DTC are not present at this time. Using the schematics as a guide, inspect the wiring and connectors specific to this circuit. Wiggle the wiring while checking for shorts and open circuits. Were there any problems found? Yes → Repair as necessary. Perform BODY VERIFICATION TEST - VER 1. No → Test Complete.	All

Symptom:

REAR WIPER OUTPUT OPEN

When Monitored and Set Condition:

REAR WIPER OUTPUT OPEN

When Monitored: Ignition on.

Set Condition: The Output is ON, the Output Driver Status is LOW and there is no Park signal.

POSSIBLE CAUSES
INTERMITTENT WIRING AND CONNECTORS
REAR WIPER MOTOR CONTROL CIRCUIT OPEN
REAR WIPER MOTOR GROUND OPEN
REAR WIPER MOTOR CONTROL CIRCUIT SHORT TO VOLTAGE
REAR WIPER MOTOR
BODY CONTROL MODULE

TEST	ACTION	APPLICABILITY
1	Ignition on, engine not running. Turn on the Rear Wiper. Does the Rear Wiper Function? Yes → Go To 2 No → Go To 3	All
2	Turn the ignition on. With the DRBIII®, erase all BCM and FCM DTCs. Turn the ignition off. The conditions necessary to set this DTC are not present at this time. Using the schematics as a guide, inspect the wiring and connectors specific to this circuit. Wiggle the wiring while checking for shorts and open circuits. Were there any problems found? Yes → Repair as necessary. Perform BODY VERIFICATION TEST - VER 1. No → Test Complete.	All

REAR WIPER OUTPUT OPEN — Continued

TEST	ACTION	APPLICABILITY
3	Turn the ignition off to the lock position. Disconnect the Rear Wiper Motor harness connector. **Note: Check connectors - Clean/repair as necessary.** Turn the ignition and Rear Wiper Switch on. Using a 12-volt test light connected to ground, check the Rear Wiper Motor Control circuit in the Rear Wiper Motor harness connector. Does the test light illuminate brightly? Yes → Go To 4 No → Go To 5	All
4	Turn the ignition off to the lock position. Disconnect the Rear Wiper Motor harness connector. **Note: Check connectors - Clean/repair as necessary.** Ignition on, engine not running. Using a 12-volt test light connected to 12 Volts, check the Rear Wiper Motor ground circuit in the Rear Wiper Motor harness connector. **NOTE: The test light must illuminate brightly. Compare the brightness to that of a direct connection to the battery.** Does the test light illuminate brightly? Yes → Replace the Rear Wiper Motor in accordance with the Service Information. Perform BODY VERIFICATION TEST - VER 1. No → Repair the Rear Wiper Motor ground circuit for an open. Perform BODY VERIFICATION TEST - VER 1.	All
5	Turn the ignition off to the lock position. Disconnect the Body Control Module harness connector. Disconnect the Rear Wiper Motor harness connector. **Note: Check connectors - Clean/repair as necessary.** Measure the resistance of the Rear Wiper Motor Control Circuit from the Body Control Module harness connector to the Rear Wiper Motor harness connector. Is the resistance above 5.0 ohms? Yes → Repair the Rear Wiper Motor Control Circuit for an open. Perform BODY VERIFICATION TEST - VER 1. No → Go To 6	All
6	Turn the ignition off to the lock position. Disconnect the Body Control Module harness connector. Disconnect the Rear Wiper Motor harness connector. **Note: Check connectors - Clean/repair as necessary.** Turn the ignition on. Using a 12-volt test light connected to ground, check the Rear Wiper Motor Control circuit. Is the test light on? Yes → Repair the Rear Wiper Motor Control Circuit for a short to voltage. Perform BODY VERIFICATION TEST - VER 1. No → Replace the Body Control Module in accordance with the Service Information. Perform BODY VERIFICATION TEST - VER 1.	All

Symptom:

REAR WIPER OUTPUT SHORT TO GROUND

When Monitored and Set Condition:

REAR WIPER OUTPUT SHORT TO GROUND

When Monitored: Ignition ON

Set Condition:

POSSIBLE CAUSES
REAR WIPER MOTOR FUNCTION
INTERMITTENT WIRING AND CONNECTORS
REAR WIPER MOTOR CONTROL CIRCUIT SHORT TO GROUND
BODY CONTROL MODULE

TEST	ACTION	APPLICABILITY
1	Ignition on, engine not running. Turn on the Rear Wiper. Does the Rear Wiper Function? Yes → Go To 2 No → Go To 3	All
2	Turn the ignition on. With the DRBIII®, erase all BCM and FCM DTCs. Turn the ignition off. The conditions necessary to set this DTC are not present at this time. Using the schematics as a guide, inspect the wiring and connectors specific to this circuit. Wiggle the wiring while checking for shorts and open circuits. Were there any problems found? Yes → Repair as necessary. Perform BODY VERIFICATION TEST - VER 1. No → Test Complete.	All
3	Turn the ignition off to the lock position. Disconnect the Body Control Module harness connector. Disconnect the Rear Wiper Motor harness connector. **Note: Check connectors - Clean/repair as necessary.** Measure the resistance between ground and the Rear Wiper Motor Control circuit. Is the resistance less than 5.0 ohms? Yes → Repair the Rear Wiper Motor Control Circuit for a short to ground. Perform BODY VERIFICATION TEST - VER 1. No → Go To 4	All

REAR WIPER OUTPUT SHORT TO GROUND — Continued

TEST	ACTION	APPLICABILITY
4	Turn the ignition off to the lock position. Disconnect the Body Control Module harness connector. Connect a 20A Fused jumper wire between B+ and the Rear Wiper Motor Signal circuit in the Body Control Module connector harness. **NOTE: An internal short in the Wiper Motor may cause the fuse to open.** Does the Wiper Motor function? Yes → Replace the Body Control Module in accordance with the Service Information. Perform BODY VERIFICATION TEST - VER 1. No → Replace the Rear Wiper Motor in accordance with the Service Information. Perform BODY VERIFICATION TEST - VER 1.	All

Symptom:

REAR WIPER SWITCH MUX INPUT OPEN

When Monitored and Set Condition:

REAR WIPER SWITCH MUX INPUT OPEN

When Monitored: Ignition ON

Set Condition: A Sensor voltage is over 4.76 volts for more than .125 seconds.

POSSIBLE CAUSES
INTERMITTENT WIRING AND CONNECTORS
REAR WIPER SWITCH MUX CIRCUIT OPEN
REAR WIPER SWITCH MUX RETURN CIRCUIT OPEN
REAR WIPER SWITCH OPEN
BODY CONTROL MODULE

TEST	ACTION	APPLICABILITY
1	Turn the ignition on. With the DRB, select Body, Body Control Module and read the R Wiper Switch Sensor voltage. Does the DRB display a Switch voltage greater than 4.5 volts? Yes → Go To 2 No → Go To 5	All
2	Turn the ignition off. Disconnect the Rear Wiper Switch harness connector. Connect a jumper wire between the Rear Wiper Switch MUX circuit and the Rear Wiper Switch MUX Return circuit in the Rear Wiper Switch harness connector. Turn the ignition on. With the DRB, select Body, Body Controller and read the Rear Wiper SW volts. Does the DRB R Wiper Switch Sensor voltage read less than 0.3 Volts? Yes → Replace the Rear Wiper Switch in accordance with the Service Information. Perform BODY VERIFICATION TEST - VER 1. No → Go To 3	All
3	Turn the ignition off to the lock position. Disconnect the applicable Body Control Module harness connector. Disconnect the Rear Wiper Switch harness connector. **Note: Check connectors - Clean/repair as necessary.** Measure the resistance of the Rear Wiper Switch MUX circuit from the Body Control Module connector to the Rear Wiper Switch harness connector. Is the resistance above 5.0 ohms? Yes → Repair the Rear Wiper Switch MUX circuit for an open. Perform BODY VERIFICATION TEST - VER 1. No → Go To 4	All

REAR WIPER SWITCH MUX INPUT OPEN — Continued

TEST	ACTION	APPLICABILITY
4	Turn the ignition off to the lock position. Disconnect the Body Control Module harness connector. Disconnect the Rear Wiper Switch harness connector. **Note: Check connectors - Clean/repair as necessary.** Measure the resistance of the Rear Wiper Switch MUX Return circuit from the Body Control Module connector to the Rear Wiper Switch harness connector. Is the resistance above 5.0 ohms? Yes → Repair the Rear Wiper Switch MUX Return circuit for an open. Perform BODY VERIFICATION TEST - VER 1. No → Replace the Body Control Module in accordance with the Service Information. Perform BODY VERIFICATION TEST - VER 1.	All
5	Turn the ignition on. With the DRBIII®, erase all BCM and FCM DTCs. Turn the ignition off. The conditions necessary to set this DTC are not present at this time. Using the schematics as a guide, inspect the wiring and connectors specific to this circuit. Wiggle the wiring while checking for shorts and open circuits. Were there any problems found? Yes → Repair as necessary. Perform BODY VERIFICATION TEST - VER 1. No → Test Complete.	All

Symptom:

REAR WIPER SWITCH MUX INPUT SHORT TO GROUND

When Monitored and Set Condition:

REAR WIPER SWITCH MUX INPUT SHORT TO GROUND

When Monitored: Ignition ON

Set Condition: A Sensor voltage is below 0.24 volts for more than 0.125 seconds.

POSSIBLE CAUSES
REAR WIPER SWITCH SHORTED
INTERMITTENT WIRING AND CONNECTORS
REAR WIPER SWITCH MUX CIRCUIT SHORT TO GROUND
REAR WIPER SWITCH MUX RETURN CIRCUIT SHORT TO GROUND
REAR WIPER SWITCH MUX CIRCUIT SHORT TO MUX RETURN CIRCUIT
BODY CONTROL MODULE

TEST	ACTION	APPLICABILITY
1	Turn the ignition on. With the DRB, select Body, Body Control Module and read the R Wiper Switch Sensor voltage. Does the DRB display a Switch voltage less than 0.4 volts? Yes → Go To 2 No → Go To 6	All
2	Turn the ignition off. Disconnect the Rear Wiper Switch harness connector. Turn the ignition on. With the DRB, select Body, Body Control Module and read the R Wiper Switch Sensor voltage.. Does the DRB display more than 4.8 volts? Yes → Replace the Rear Wiper Switch in accordance with the Service Information. Perform BODY VERIFICATION TEST - VER 1. No → Go To 3	All
3	Turn the ignition off to the lock position. Disconnect the Body Control Module harness connector. Disconnect the Rear Wiper Switch harness connector. **Note: Check connectors - Clean/repair as necessary.** Measure the resistance between ground and the Rear Wiper Switch MUX circuit. Is the resistance less than 5.0 ohms? Yes → Repair the Rear Wiper Switch MUX Circuit for a short to ground. Perform BODY VERIFICATION TEST - VER 1. No → Go To 4	All

REAR WIPER SWITCH MUX INPUT SHORT TO GROUND — Continued

TEST	ACTION	APPLICABILITY
4	Turn the ignition off to the lock position. Disconnect the Body Control Module harness connector. Disconnect the Rear Wiper Switch harness connector. **Note: Check connectors - Clean/repair as necessary.** Measure the resistance between the Rear Wiper Switch MUX Return circuit and the Rear Wiper Switch MUX circuit. Is the resistance less than 5.0 ohms? Yes → Repair the Rear Wiper Switch MUX Circuit for a short to the Rear Wiper Switch MUX Return circuit. Perform BODY VERIFICATION TEST - VER 1. No → Go To 5	All
5	Turn the ignition off to the lock position. Disconnect the Body Control Module harness connector. Disconnect the Rear Wiper Switch harness connector. **Note: Check connectors - Clean/repair as necessary.** Measure the resistance between ground and the Rear Wiper Switch MUX Return circuit. Is the resistance less than 5.0 ohms? Yes → Repair the Rear Wiper Switch MUX Return Circuit for a short to ground. Perform BODY VERIFICATION TEST - VER 1. No → Replace the Body Control Module in accordance with the Service Information. Perform BODY VERIFICATION TEST - VER 1.	All
6	Turn the ignition on. With the DRBIII®, erase all BCM and FCM DTCs. Turn the ignition off. The conditions necessary to set this DTC are not present at this time. Using the schematics as a guide, inspect the wiring and connectors specific to this circuit. Wiggle the wiring while checking for shorts and open circuits. Were there any problems found? Yes → Repair as necessary. Perform BODY VERIFICATION TEST - VER 1. No → Test Complete.	All

Symptom:

WASHER OUTPUT OPEN CIRCUIT

POSSIBLE CAUSES
WASHER PUMP MOTOR
WASHER PUMP MOTOR
FRONT WASHER MOTOR CONTROL CIRCUIT OPEN
REAR WASHER MOTOR CONTROL CIRCUIT OPEN
FRONT WASHER MOTOR CONTROL CIRCUIT SHORT TO VOLTAGE
REAR WASHER MOTOR CONTROL CIRCUIT SHORT TO VOLTAGE
FRONT CONTROL MODULE
INTERMITTENT WIRING AND CONNECTORS

TEST	ACTION	APPLICABILITY
1	Ignition on, engine off. Press the Front Washer Switch. Press the Rear Washer Switch. Does the Front or Rear Washer Motor Function Normal? Yes → Go To 2 No → Go To 3	All
2	Turn the ignition on. With the DRBIII®, erase all BCM and FCM DTCs. Turn the ignition off. The conditions necessary to set this DTC are not present at this time. Using the schematics as a guide, inspect the wiring and connectors specific to this circuit. Wiggle the wiring while checking for shorts and open circuits. Were there any problems found? Yes → Repair as necessary. Perform BODY VERIFICATION TEST - VER 1. No → Test Complete.	All
3	Turn the ignition off to the lock position. Disconnect the Washer Pump Motor harness connector. Ignition on, engine off. Using a 12-volt test light connected to 12 Volts, check the Front Washer Pump Motor Control circuit in the Washer Pump Motor harness connector while pressing the Front Washer Switch. Does the test light illuminate brightly? Yes → Replace the Washer Pump Motor in accordance with the Service Information. Perform BODY VERIFICATION TEST - VER 1. No → Go To 4	All

WASHER OUTPUT OPEN CIRCUIT — Continued

TEST	ACTION	APPLICABILITY
4	Turn the ignition off to the lock position. Disconnect the Washer Pump Motor harness connector. Ignition on, engine off. Using a 12-volt test light connected to 12 Volts, check the Rear Washer Pump Motor Control circuit in the Washer Pump Motor harness connector while pressing the Rear Washer Switch. Does the test light illuminate brightly? Yes → Replace the Washer Pump Motor in accordance with the Service Information. Perform BODY VERIFICATION TEST - VER 1. No → Go To 5	All
5	Turn the ignition off to the lock position. Disconnect the Front Control Module harness connector. Disconnect the Washer Pump Motor harness connector. **NOTE: Check connectors - Clean/repair as necessary.** Measure the resistance of the Front Washer Pump Motor Control Circuit. Is the resistance above 5.0 ohms? Yes → Repair the Front Washer Pump Motor Control Circuit for an open. Perform BODY VERIFICATION TEST - VER 1. No → Go To 6	All
6	Turn the ignition off to the lock position. Disconnect the Front Control Module harness connector. Disconnect the Washer Pump Motor harness connector. **NOTE: Check connectors - Clean/repair as necessary.** Measure the resistance of the Rear Washer Pump Motor Control Circuit. Is the resistance above 5.0 ohms? Yes → Repair the Rear Washer Pump Motor Control Circuit for an open. Perform BODY VERIFICATION TEST - VER 1. No → Go To 7	All
7	Turn the ignition off to the lock position. Disconnect the Front Control Module connector. Disconnect the Washer Pump Motor harness connector. **NOTE: Check connectors - Clean/repair as necessary.** Turn the ignition on. Using a 12-volt test light connected to ground, check the Front Washer Pump Motor Control circuit. Does the test light illuminate brightly? Yes → Repair the Front Washer Pump Motor Control Circuit for a short to voltage. Perform BODY VERIFICATION TEST - VER 1. No → Go To 8	All

WASHER OUTPUT OPEN CIRCUIT — Continued

TEST	ACTION	APPLICABILITY
8	Turn the ignition off to the lock position. Disconnect the Front Control Module connector. Disconnect the Washer Pump Motor harness connector. **NOTE: Check connectors - Clean/repair as necessary.** Turn the ignition on. Using a 12-volt test light connected to ground, check the Rear Washer Pump Motor Control circuit. Does the test light illuminate brightly? Yes → Repair the Rear Washer Pump Motor Control Circuit for a short to voltage. Perform BODY VERIFICATION TEST - VER 1. No → Replace the Front Control Module in accordance with the Service Information. Perform BODY VERIFICATION TEST - VER 1.	All

Symptom:

WASHER OUTPUT SHORTED TO BATTERY

POSSIBLE CAUSES
FRONT WASHER PUMP MOTOR CONTROL CIRCUIT OPEN
REAR WASHER PUMP MOTOR CONTROL CIRCUIT OPEN
WASHER PUMP MOTOR
FRONT CONTROL MODULE

TEST	ACTION	APPLICABILITY
1	Turn the ignition off. Disconnect the Washer Pump Motor. Disconnect the FCM harness connector. Measure the resistance of the Front Washer Pump Motor Control Circuit. Is the resistance below 5.0 ohms? Yes → Go To 2 No → Repair the Front Washer Pump Motor Control Circuit for an open. Perform BODY VERIFICATION TEST - VER 1.	All
2	Turn the ignition off. Disconnect the Washer Pump Motor harness connector. Disconnect the FCM harness connector. Measure the resistance of the Rear Washer Pump Motor Control Circuit. Is the resistance below 5.0 ohms? Yes → Go To 3 No → Repair the Rear Washer Pump Motor Control Circuit for an open. Perform BODY VERIFICATION TEST - VER 1.	All
3	Turn the ignition on. Disconnect the Washer Pump Motor connector. Actuate the washers. Measure the voltage of the Washer Pump Output Circuits. Is the voltage above 10.0 volts? Yes → Replace the Washer Pump Motor. Perform BODY VERIFICATION TEST - VER 1. No → Replace the Front Control Module. Perform BODY VERIFICATION TEST - VER 1.	All

Symptom:
WASHER OUTPUT SHORTED TO GROUND

POSSIBLE CAUSES
WASHER PUMP SHORTED
FRONT WASH PUMP MOTOR CONTROL CIRCUIT SHORT TO GROUND
REAR WASH PUMP MOTOR CONTROL CIRCUIT SHORT TO GROUND
FRONT CONTROL MODULE
INTERMITTENT WIRING AND CONNECTORS

TEST	ACTION	APPLICABILITY
1	Turn the ignition on. With the DRB, select Body, Front Control Module and read the Washer Pump Motor voltage. Does the DRB display a Switch voltage less than 0.4 volts? Yes → Go To 2 No → Go To 5	All
2	Turn the ignition off. Disconnect the Washer Pump Motor harness connector. Turn the ignition on. With the DRB, select Body, Front Control Module and read the Washer Pump Motor voltage.. Does the DRB display more than 4.8 volts? Yes → Replace the Washer Pump Motor in accordance with the Service Information. Perform BODY VERIFICATION TEST - VER 1. No → Go To 3	All
3	Turn the ignition off to the lock position. Disconnect the Front Control Module harness connector. Disconnect the Washer Pump Motor harness connector. **NOTE: Check connectors - Clean/repair as necessary.** Measure the resistance between ground and the Front Washer Pump Motor Control circuit. Is the resistance less than 5.0 ohms? Yes → Repair the Front Washer Pump Motor Control circuit for a short to ground condition. Perform BODY VERIFICATION TEST - VER 1. No → Go To 4	All

WASHER OUTPUT SHORTED TO GROUND — Continued

TEST	ACTION	APPLICABILITY
4	Turn the ignition off to the lock position. Disconnect the Front Control Module harness connector. Disconnect the Washer Pump Motor harness connector. **NOTE: Check connectors - Clean/repair as necessary.** Measure the resistance between ground and the Rear Washer Pump Motor Control circuit. Is the resistance less than 5.0 ohms? Yes → Repair the Rear Washer Pump Motor Control circuit for a short to ground. Perform BODY VERIFICATION TEST - VER 1. No → Replace the Front Control Module in accordance with the Service Information. Perform BODY VERIFICATION TEST - VER 1.	All
5	Turn the ignition on. With the DRBIII®, erase all FCM DTCs. Turn the ignition off. The conditions necessary to set this DTC are not present at this time. Using the schematics as a guide, inspect the wiring and connectors specific to this circuit. Wiggle the wiring while checking for shorts and open circuits. Were there any problems found? Yes → Repair as necessary. Perform BODY VERIFICATION TEST - VER 1. No → Test Complete.	All

Verification Tests

40/41TE (NGC) TRANSMISSION VERIFICATION TEST - VER 1	APPLICABILITY
1. NOTE: After completion of the Transmission Verification Test, the Powertrain Verification Test must be performed. Refer to the Powertrain Category. 2. Connect the DRBIII® to the Data Link Connector (DLC). 3. Reconnect any disconnected components. 4. With the DRBIII®, erase all Transmission DTC's, also erase the PCM DTC's. 5. Perform *PRNDL FAULT CLEARING PROCEDURE after completion of repairs for P0706 CHECK SHIFTER SIGNAL. 6. With the DRBIII®, display Transmission Temperature. Start and run the engine until the Transmission Temperature is HOT, above 43° C or 110° F. 7. Check the transmission fluid and adjust if necessary. Refer to the Service Information for the Fluid Fill procedure. **8. NOTE: If the Transmission Control Module or Torque Converter has been replaced, or if the Transmission has been repaired or replaced, it is necessary to perform the DRBIII® Quick Learn Procedure and reset the "Pinion Factor".** 9. Road test the vehicle. With the DRBIII®, monitor the engine RPM. Make 15 to 20 1-2, 2-3, 3-4 upshifts. Perform these shifts from a standing start to 45 MPH with a constant throttle opening of 20 to 25 degrees. 10. Below 25 MPH, make 5 to 8 wide open throttle kickdowns to 1st gear. Allow at least 5 seconds each in 2nd and 3rd gear between each kickdown. 11. For a specific DTC, drive the vehicle to the Symptom's When Monitored/When Set conditions to verify the DTC is repaired. 12. If equipped with AutoStick®, upshift and downshift several times using the AutoStick® feature during the road test. **13. NOTE: Use the EATX OBDII task manager to run Good Trip time in each gear, this will confirm the repair and to ensure that the DTC has not re-matured.** 14. Check for Diagnostic Trouble Codes (DTC's) during the road test. If a DTC sets during the road test , return to the Symptom list and perform the appropriate symptom. **15. NOTE: Erase P0700 DTC in the PCM to turn the MIL light off after making transmission repairs.** Were there any Diagnostic Trouble Codes set during the road test? Yes → Repair is not complete, refer to the appropriate symptom. No → Repair is complete.	All

Verification Tests — Continued

41TE TRANSMISSION VERIFICATION TEST - VER 1	APPLICABILITY
1. Connect the DRBIII® to the Data Link Connector (DLC). 2. Reconnect any disconnected components. 3. With the DRBIII®, erase all Transmission DTC's, also erase the ECM/PCM DTC's. 4. Perform *PRNDL FAULT CLEARING PROCEDURE after completion of repairs for P0706 CHECK SHIFTER SIGNAL. **5. NOTE: Erase DTC P0700 in the ECM/PCM to turn the Malfunction Indicator Lamp (MIL) off after making Transmission repairs.** 6. With the DRBIII®, display Transmission Temperature. Start and run the engine until the Transmission Temperature is HOT - above 43° C or 110° F. 7. Check the Transmission Fluid and adjust if necessary. Refer to the Service information for the Fluid Fill procedure. **8. NOTE: If the Transmission Control Module or the Transmission has been repaired or replaced it is necessary to perform the DRBIII® Quick Learn Procedure and reset the ″Pinion Factor″** 9. Road test the vehicle. With the DRBIII®, monitor the engine RPM. Make 15 to 20 1-2, 2-3, 3-4 upshifts. Perform these shifts from a standing start to 45 MPH with a constant throttle opening of 20 to 25 degrees. 10. Below 25 MPH, make 5 to 8 wide open throttle kickdowns to 1st gear. Allow at least 5 seconds each in 2nd and 3rd gear between each kickdown. 11. For a specific DTC, drive the vehicle to the Symptom's When Monitored/When Set conditions to verify the DTC repair. 12. If equipped with AutoStick®, up-shift and down-shift several times using the AutoStick® feature during the road test. **13. NOTE: Use the EATX OBDII Task Manager to run Good Trip time in each gear, this will confirm the repair and to ensure that the DTC has not re-matured.** 14. Check for Diagnostic Trouble Codes (DTC's) during the road test. If a DTC sets during the road test , return to the Symptom list and perform the appropriate Symptom. Were there any Diagnostic Trouble Codes (DTCs) set during the road test? Yes → Refer to the Symptom List for appropriate Symptom(s). No → Repair is complete.	All

ABS VERIFICATION TEST - VER 1	APPLICABILITY
1. Turn the ignition off. 2. Connect all previously disconnected components and connectors. 3. Ensure all accessories are turned off and the battery is fully charged. 4. Ensure that the Ignition is on, and with the DRBIII, erase all Diagnostic Trouble Codes from ALL modules. Start the engine and allow it to run for 2 minutes and fully operate the system that was malfunctioning. 5. Turn the ignition off and wait 5 seconds. Turn the ignition on and using the DRBIII, read DTC's from ALL modules. 6. If any Diagnostic Trouble Codes are present, return to Symptom list and troubleshoot new or recurring symptom. **7. NOTE: For Sensor Signal and Pump Motor faults, the CAB must sense all 4 wheels at 25 km/h (15 mph) before it will extinguish the ABS Indicator.** 8. If there are no DTC's present after turning ignition on, road test the vehicle for at least 5 minutes. Perform several antilock braking stops. **9. Caution: Ensure braking capability is available before road testing.** 10. Again, with the DRBIII® read DTC's. If any DTC's are present, return to Symptom list. 11. If there are no Diagnostic Trouble Codes (DTC's) present, and the customer's concern can no longer be duplicated, the repair is complete. Are any DTC's present or is the original concern still present? Yes → Repair is not complete, refer to appropriate symptom. No → Repair is complete.	All

Verification Tests — Continued

ADJUSTABLE PEDALS VERIFICATION TEST - VER 1	APPLICABILITY
1. If the Memory Seat Mirror Adjustable Pedals Module was replaced, program two pedal positions if equipped with memory function. 2. Activate the Adjustable Pedals through the full range of movement. 3. Verify that the Adjustable Pedals system is disabled with the vehicle in Reverse. 4. Verify that the Adjustable Pedals system is disabled with Speed Control activated. 5. With the DRBIII®, erase DTCs. 6. With the DRBIII®, read DTCs. Are any DTC's present or is the original complaint still present? Yes → Repair is not complete, refer to appropriate symptom. No → Repair is complete.	All

BODY VERIFICATION TEST - VER 1	APPLICABILITY
1. Disconnect all jumper wires and reconnect all previously disconnected components and connectors. **2. NOTE: If the SKREEM, PCM/ECM or FCM was replaced, refer to the service information for proper programming procedures.** 3. If the Body Control Module (BCM) was replaced, turn the ignition on for 15 seconds (to allow the new BCM to learn VIN) or engine may not start (if VTSS equipped). If the vehicle is equipped with VTSS, use the DRBIII® and enable VTSS. 4. Program options as necessary. 5. If any HVAC door actuator circuits were repaired, with the DRBIII® in HVAC, System Tests, select Actuator Circuit Test. (Manual Temp Control only). 6. If any actuators were replaced in the HVAC System, with the DRBIII® in HVAC, select System Tests then select HVAC Door Recalibration (Manual Temp Control only). 7. If any actuators were replaced in the ATC System, with the DRBIII® in Automatic Temp Control, select Miscellaneous then select Reset ATC Head. 8. For Three-Zone HVAC Systems, if HVAC Control/Rear Blower Rear Control was replaced/ Rear Blend Pot Circuit Open/Short DTC was set/any rear blend pot circuit was repaired, proceed to Number 9 & 10. 9. With DRBIII® in HVAC, select System Tests then select HVAC Door Recalibration. Door Recalibration must pass before proceeding to next step. 10. With DRBIII® in HVAC, select System Tests then select Reset Rear Blend Switch Span. Rotate Rear Blend/Mode control on Rear Blower Rear Control to full cold. Wait five seconds, then rotate control to full hot. 11. If any repairs were made to the power sliding door or power liftgate, use the DRBIII® and perform the open and close system tests. Observe the instructions on the DRBIII® screen. 12. Ensure that all accessories are turned off and the battery is fully charged. 13. With the DRBIII®, record and erase all DTCs from ALL modules. Start and run the engine for 2 minutes. Operate all functions of the system that caused the original concern. 14. Turn the ignition off and wait 5 seconds. Turn the ignition on and using the DRBIII®, read DTCs from ALL modules. Are any DTC's present or is the original condition still present? Yes → Repair is not complete, refer to the appropriate symptom. No → Repair is complete.	All

Verification Tests — Continued

CABIN HEATER VERIFICATION TEST - VER 1	APPLICABILITY
1. WARNING: DO NOT OPERATE THE DCHA IN AN ENCLOSED AREA SUCH AS A GARAGE THAT DOES NOT HAVE EXHAUST VENTILATION FACILITIES. ALWAYS VENT THE DCHA's EXHAUST WHEN OPERATING THE DCHA. FAILURE TO FOLLOW THESE INSTRUCTIONS CAN RESULT IN PERSONAL INJURY OR DEATH. **2. WARNING: ALLOW THE DCHA ASSEMBLY TO COOL BEFORE PERFORMING A COMPONENT INSPECTION/REPAIR/REPLACEMENT. FAILURE TO FOLLOW THESE INSTRUCTIONS CAN RESULT IN PERSONAL INJURY OR DEATH.** **3. NOTE: The DCHA Control will store up to three DTCs in its memory.** **4. NOTE: If the DCHA Control detects a new fault in the DCHA system, one that is not already stored in its memory, the DCHA Control will clear the oldest of the three stored DTCs, and it will store the new fault's DTC.** **5. NOTE: If the DCHA control detects a reoccurrence of a stored fault, the DCHA control will overwrite that fault's DTC with the most recent occurrence.** 6. Verify that the vehicle's battery is fully charged. 7. Verify that there is more than 1/8 of a tank of fuel in the vehicle's fuel tank. Add fuel, if necessary. 8. Verify that all DCHA coolant hoses and fuel lines are securely fastened to their respective components. 9. Disconnect all jumper wires and reconnect all previously disconnected components and connectors. 10. If a heater installation/cooling system service was performed, purge the coolant circuit of air in accordance with the Service Information. 11. Turn the ignition on. 12. On MTC, set the Blend control to the max cool position. 13. On ATC, set the Driver temperature control to LO (max cool). 14. Turn the ATC's or MTC's Power switch off. 15. Ensure that all accessories are turned off. 16. If a fuel system service requiring fuel to drain out of the DCHA fuel line was performed, prime the DCHA Dosing Pump in accordance with the Service Information. 17. With the DRBIII®, record and erase all DTCs from the Diesel Cabin Heater Assist (DCHA) Control and the Front Control Module (FCM). Cycle the ignition off then on. 18. Start the engine. 19. Allow the engine to idle. 20. Turn the ATC's or MTC's Power switch on. 21. Turn the Blower control to the high speed position. **22. NOTE: Do not disconnect the vehicle's battery or the DCHA's main power supply while the DCHA is in operation or in run-down mode. Failure to follow these instructions can result in excess emissions from the DCHA during heater operation.** 23. For MTC, perform Steps 24 through 29 and Steps 33 through 36 of this procedure. For ATC, perform Steps 30 through 36 of this procedure. **24. CAUTION: For MTC, do not activate the Diesel Cabin Heater Test with the engine off. Failure to follow these instructions may result in internal damage to the DCHA Heater Module.** **25. NOTE: For MTC, while performing the Diesel Cabin Heater Test, inspect the coolant and fuel connections for leakage.** 26. For MTC, with the DRBIII® in HVAC, Systems Tests, select Diesel Cabin Heater Test and press #1. 27. For MTC, set the Blend control to the max heat position. Allow the Diesel Cabin Heater Test to run for five minutes. Upon completion of the test, proceed as follows: 28. For MTC, set the Blend control to the max cool position. 29. For MTC, press #2 on the DRBIII® keyboard. **30. NOTE: For ATC, before actuating the AC Cooldown Test, verify that the A/C Compressor is not running. If the compressor is running, turn the A/C off and allow the evaporator to warm up before proceeding with the test.** **31. NOTE: For ATC, while performing the AC Cooldown Test, inspect the coolant and fuel connections for leakage.** 32. For ATC, with the DRBIII® in ATC, Systems Tests, perform the A/C Cooldown Test. The DCHA will operate for approximately 7 minutes. 3 minutes to run and 4 minutes to purge. 33. Turn the Blower control off. 34. Turn the ATC's or MTC's Power switch off. 35. Turn the ignition off, wait 5 seconds, then turn the ignition on. 36. Using the DRBIII®, read the Cabin Heater and Active FCM DTCs. Are any DTC's present or is the original condition still present? Yes → Repair is not complete, refer to the appropriate symptom. No → Repair is complete.	All

Verification Tests — Continued

MEMORY SYSTEM VERIFICATION TEST - VER 1	APPLICABILITY
1. Reconnect all previously disconnected components and connectors. 2. If any Memory Seat Memory Module Trouble Codes are present, erase at this time. 3. With the Memory Switch on the Driver's Door, program the Driver's Seat #1 Button to a desired position and Driver #2 Button to a different position. 4. Remove the Ignition Key and close all Doors to allow the Body Control Module to time out, about 30 seconds. 5. Verify that both Memory positions can be recalled from the RKE transmitter and the Memory Switch on the Driver's Door. 6. Turn the ignition on, and with the DRBIII, erase all Diagnostic Trouble Codes from ALL modules. Start the engine and allow it to run for 2 minutes and fully operate the system that was malfunctioning. 7. Turn the ignition off and wait 5 seconds. Turn the ignition on and using the DRBIII, read DTC's from ALL modules. Are any DTC's present or is the original complaint still present? Yes → Repair is not complete, refer to appropriate symptom. No → Repair is complete.	All

OCS VERIFICATION TEST - VER 1	APPLICABILITY
1. Remove any special tools or jumper wires and reconnect all previously disconnected components - except the Battery. **2. WARNING: TO AVOID PERSONAL INJURY OR DEATH, TURN THE IGNITION ON, THEN RECONNECT THE BATTERY.** 3. Connect the DRBIII® to the Data Link Connector - use the most current software available. 4. Use the DRBIII® and erase the stored codes in all airbag system modules. 5. Turn the ignition off, and wait 15 seconds, then turn the ignition on. 6. Wait one minute, and read active codes and if there are none present read the stored codes. 7. Note: Read the DTC's in ACM and OCM. 8. If the DRBIII® shows any active or stored codes, return to the Symptom list and follow path specified for that trouble code. If no active or stored codes are present, the repair is complete. Are any active DTC present? Yes → Return to the Symptom list and follow path specified for the trouble code. No → Repair is complete.	All

Verification Tests — Continued

POWERTRAIN VERIFICATION TEST VER - 1 - NGC	APPLICABILITY
1. NOTE: After completing the Powertrain Verification Test the Transmission Verification Test must be performed. **2. NOTE: If the PCM has been replaced and the correct VIN and mileage have not been programmed, a DTC will be set in the ABS Module, Airbag Module and the SKIM.** **3. NOTE: If the vehicle is equipped with a Sentry Key Immobilizer System, Secret Key data must be updated. Refer to the Service Information for the PCM, SKIM and the Transponder (ignition key) for programming information.** 4. Inspect the vehicle to ensure that all components related to the repair are connected properly. 5. Inspect the engine oil for fuel contamination. Replace the oil and filter as necessary. 6. Attempt to start the engine. 7. If the No Start condition is still present, refer to the symptom list and perform the diagnostic testing as necessary. refer to and Technical Service Bulletins that may apply. 8. Run the engine for one warm-up cycle to verify operation. 9. With the DRBIII®, confirm that no DTCs or Secondary Indicators are present and that all components are functioning properly. 10. If a DTC is present, refer to the appropriate category and select the corresponding symptom. Are any DTCs present? Yes → Repair is not complete, refer to appropriate symptom. No → Repair is complete.	All

ROAD TEST VERIFICATION - VER-2	APPLICABILITY
1. Inspect the vehicle to ensure that all components are properly installed and connected. Reassemble and reconnect components as necessary. 2. If this verification procedure is being performed after a non-DTC test, perform steps 3 and 4. If not, proceed to step 5. 3. Check to see if the initial symptom still exists. If there are no trouble codes and the symptom no longer exists, the repair was successful and testing is now complete. 4. If the initial or another symptom exists, the repair is not complete. Check all pertinent Technical Service Bulletins (TSBs) and return to the Symptom List if necessary. 5. For previously read DTCs that have not been diagnosed, return to the Symptom List and follow the diagnostic path for that DTC; otherwise, continue. 6. If the Engine Control Module (ECM) has not been changed, perform steps 7 and 8, otherwise, continue with step 9. 7. With the DRB III®, erase all diagnostic trouble codes (DTCs), then disconnect the DRB III®. 8. Turn the ignition off for at least 10 seconds. 9. If equipped with a Transfer Case Position Switch, perform step 10, otherwise, continue with step 11. 10. With the ignition switch on, place the Transfer Case Shift Lever in each gear position, stopping for 15 seconds in each position. 11. Ensure no DTCs remain by performing steps 12 through 15. 12. Road test the vehicle. For some of the road test, drive the vehicle at least 64 km/h (40 MPH). If this test is for an A/C Relay Control Circuit, drive the vehicle for at least 5 minutes with the A/C on. 13. At some point, stop the vehicle and turn the engine off for at least 10 seconds, then restart the engine and continue. 14. Upon completion of the road test, turn the engine off and check for DTCs with the DRB III®. 15. If the repaired DTC has set again, the repair is not complete. Check for any pertinent Technical Service Bulletins (TSBs) and return to the Symptom List. If there are no DTCs, the repair was successful and is now complete. Are any DTCs or symptoms remaining? Yes → Repair is not complete, refer to appropriate symptom. No → Repair is complete.	All

Verification Tests — Continued

SKREEM VERIFICATION TEST - VER 1A	APPLICABILITY
1. Reconnect all previously disconnected components and connectors. 2. Obtain the vehicle's unique Personal Identification Number (PIN) assigned to it's original SKREEM. This number can be obtained from the vehicle's invoice or Chrysler's Customer Center (1-800-992-1997). **3. NOTE: When entering the PIN, care should be taken because the SKREEM will only allow 3 consecutive attempts to enter the correct PIN. If 3 consecutive incorrect PIN's are entered the SKREEM will Lock Out the DRB III for 1 hour.** 4. To exit Lock Out mode, the ignition key must remain in the Run position continually for 1 hour. Turn off all accessories and connect a battery charger if necessary. 5. With the DRB III, select Theft Alarm, SKREEM and Miscellaneous. Then select desired procedure and follow the steps that will be displayed. 6. If the SKREEM has been replaced, ensure all of the vehicle ignition keys are programmed to the new SKREEM. **7. NOTE: Prior to returning vehicle to the costumer, perform a module scan to be sure that all DTC's are erased. Erase any DTC's that are found.** 8. With the DRB III erase all DTC's. Perform 5 ignition key cycles leaving the key on for at least 90 seconds per cycle. 9. With the DRB III, read the SKREEM DTC's. Are there any SKREEM DTC's? Yes → Repair is not complete, refer to appropriate symptom. No → Repair is complete.	All

TIRE PRESSURE VERIFICATION TEST - VER 1 - SKREEM	APPLICABILITY
1. Adjust ALL tire pressure to recommended specifications. 2. Perform the SKREEM training as instructed in the System Description. **3. NOTE: Refer to SKREEM information for theft and RKE programming procedures.** Can the SKREEM auto learn the Sensor/Transmitter(s) and the TPMS indicator is OFF? Yes → Repair is complete. No → Refer to Diagnosing System Faults for this system.	All

VTSS VERIFICATION TEST - 1A	APPLICABILITY
1. Ensure all doors, hood, and liftgate are closed. 2. Open the driver's door. 3. Remove the ignition key (but keep in hand). 4. Lower the driver door window and lock the doors with the RKE transmitter. 5. Close the driver's door. 6. Observe the VTSS Indicator. 7. The VTSS Indicator will flash rapidly for approximately 15 seconds and then begin to flash slowly. If the VTSS Indicator is not performing as described, this indicates a system fault. Refer to symptom list for problems related to THEFT ALARM WILL NOT ARM. 8. Perform a system test on the VTSS by duplicating the original complaint. 9. Disarm the system and with the DRBIII®, read DTC's. 10. If the original complaint is corrected and there are no DTC's the repair is complete. Are any DTC's present or is the original complaint still present? Yes → Repair is not complete, refer to the appropriate symptom. No → Repair is complete.	All

Verification Tests — Continued

__AIRBAG VERIFICATION TEST - VER 1	APPLICABILITY
1. Remove any special tools or jumper wires and reconnect all previously disconnected components - except the Battery. **2. WARNING: TO AVOID PERSONAL INJURY OR DEATH, TURN THE IGNITION ON, THEN RECONNECT THE BATTERY.** 3. Connect the DRBIII® to the Data Link Connector - use the most current software available. 4. Use the DRBIII® and erase the stored codes in all airbag system modules. 5. Turn the ignition off, and wait 15 seconds, then turn the ignition on. 6. Wait one minute, and read active codes and if there are none present read the stored codes. 7. Note: If equipped with Airbag On - Off switch, read the DTC's in all switch positions. 8. Note: Read the DTC's in all airbag system related modules. 9. If the DRBIII® shows any active or stored codes, return to the Symptom list and follow path specified for that trouble code. If no active or stored codes are present, the repair is complete. Are any DTC's present or is the original condition still present? YES Repair is not complete, refer to appropriate symptom list. NO Repair is complete.	All

NOTES

8.0 COMPONENT LOCATIONS

8.1 AIRBAG SYSTEM

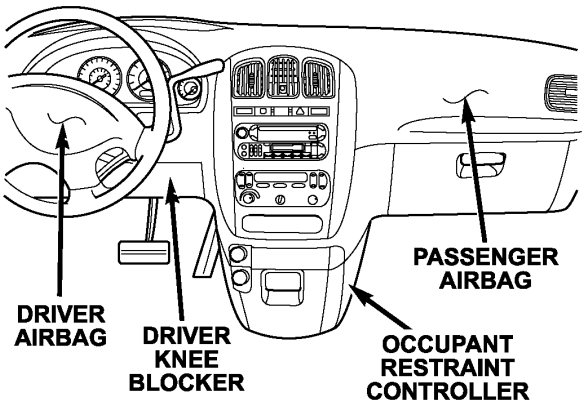

TYPICAL INSTRUMENT PANEL 8139958c

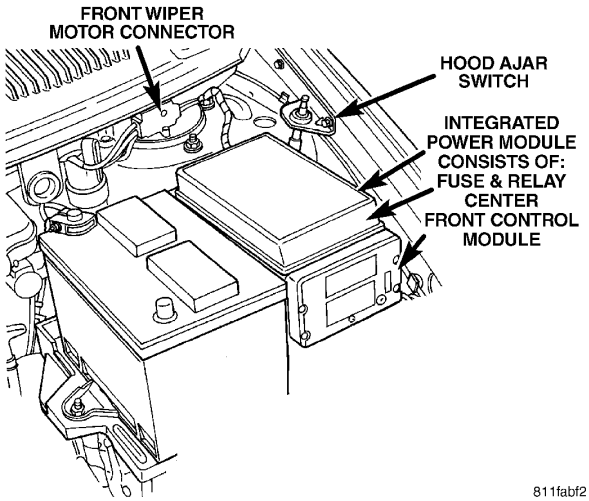

811fabf2

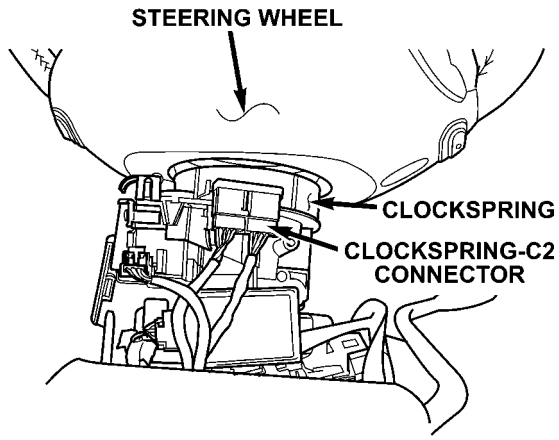

80b0d128

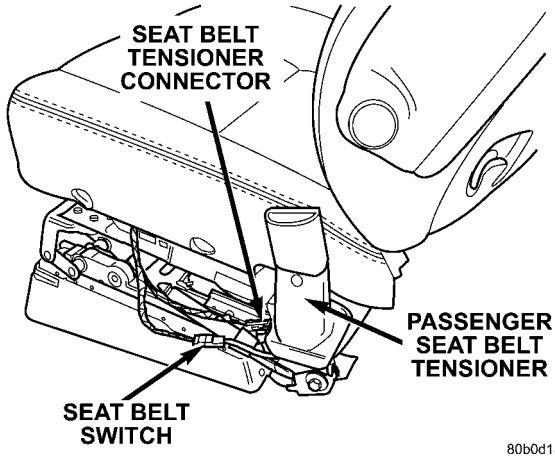

80b0d13a

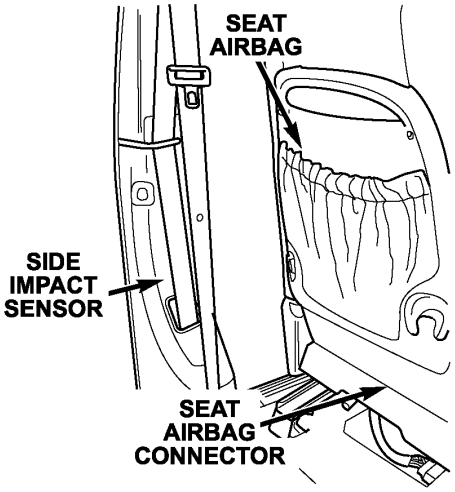

81210732

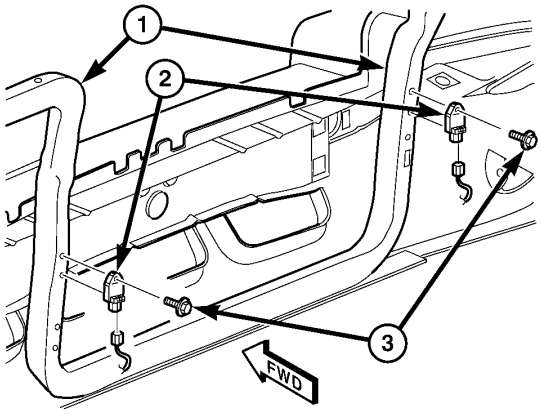

1. RADIATOR SUPPORT
2. FRONT IMPACT SENSOR
3. IMPACT SENSOR RETAINERS

81210466

8.1 AIRBAG SYSTEM (Continued)

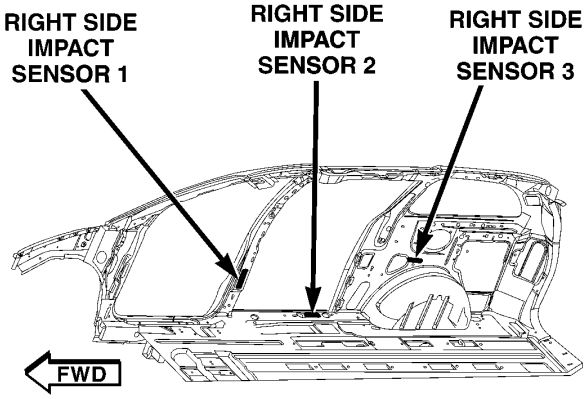

81399a4e

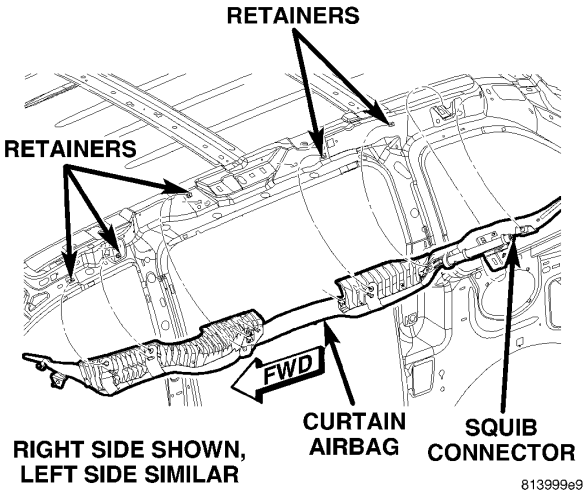

813999e9



812dd0b2

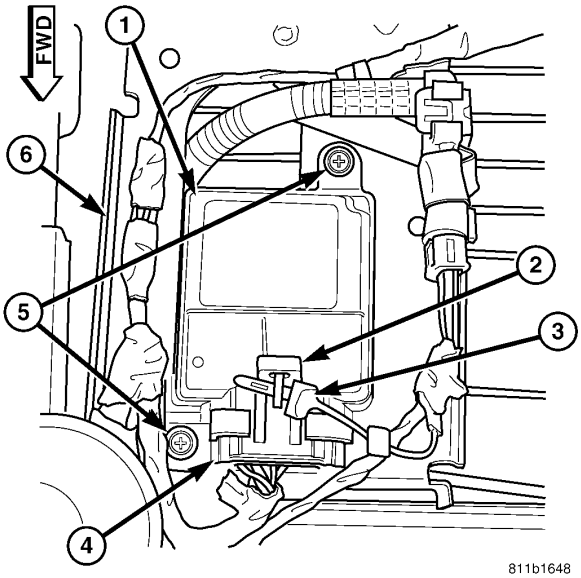

811b1648

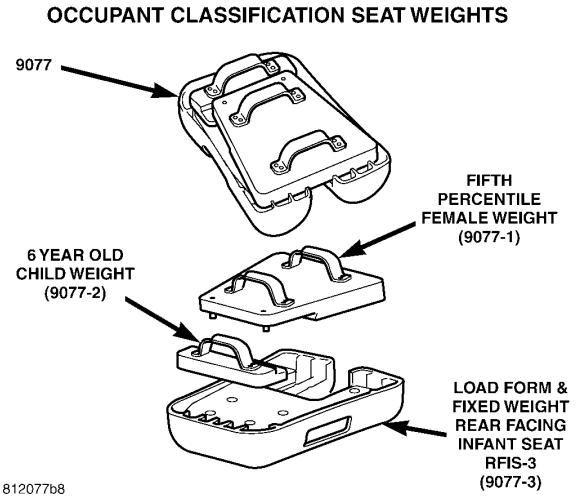

812077b8

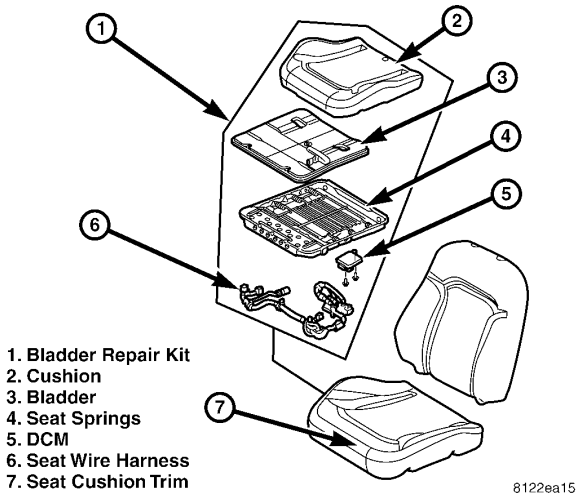

8122ea15

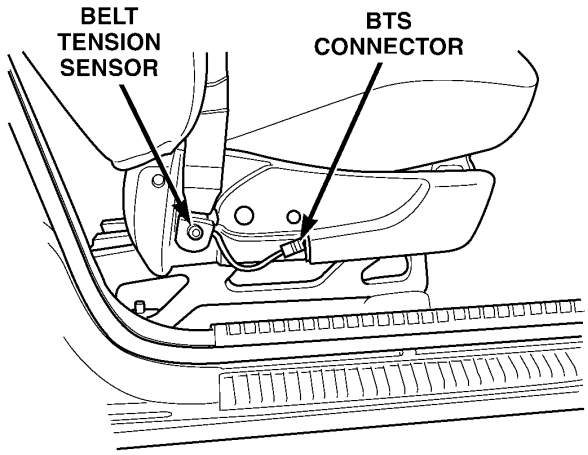

8.2 BODY CONTROL MODULE

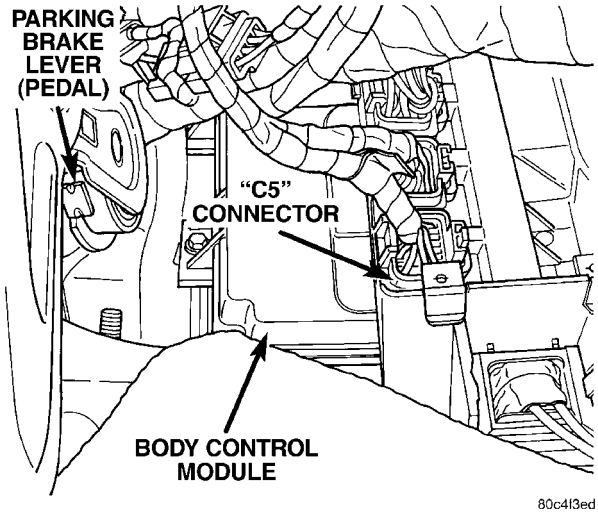

8.3 POWERTRAIN CONTROL MODULE - NGC

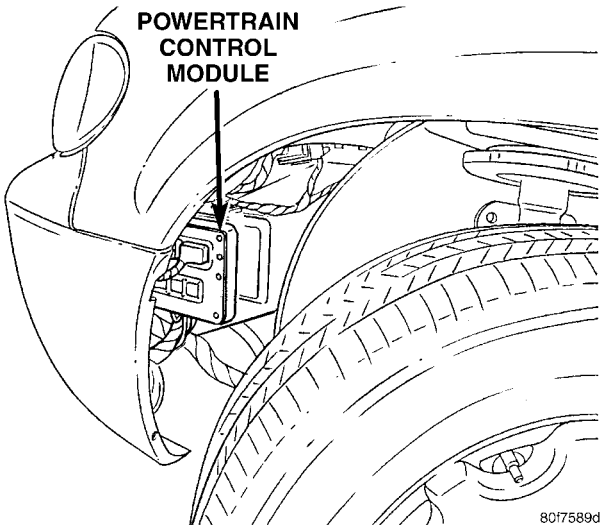

8.4 ENGINE CONTROL MODULE - DIESEL

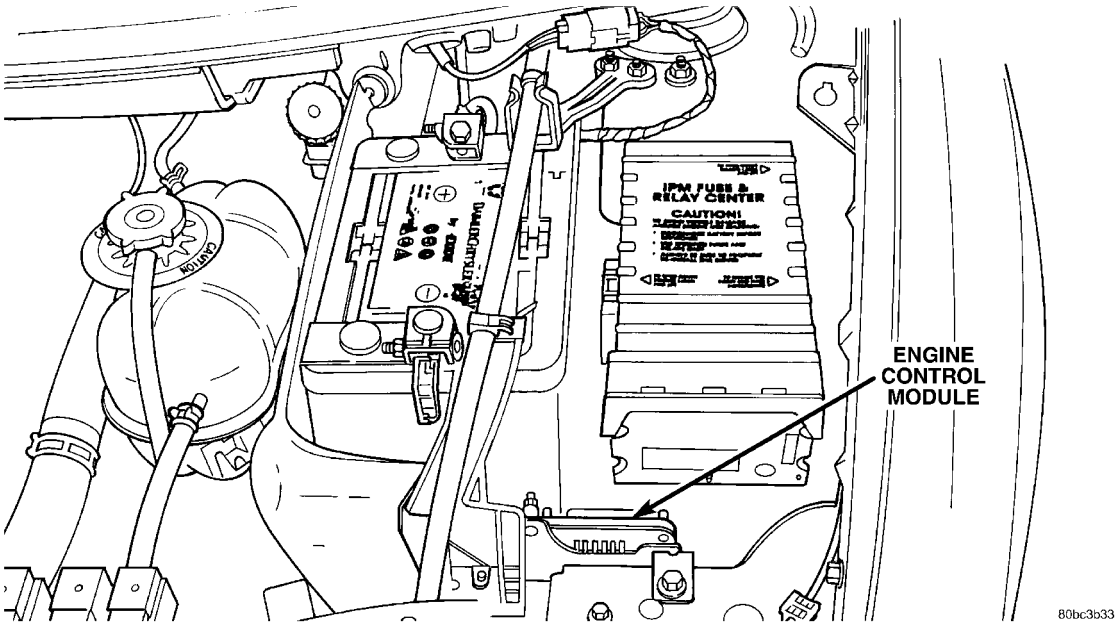

8.5 HEATING & A/C

8.5.1 ACTUATORS – FRONT, LHD

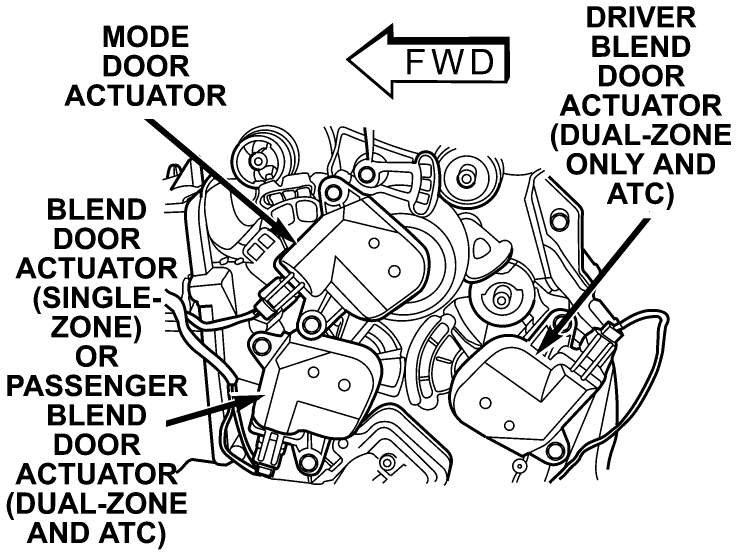

8.5.2 ACTUATOR – FRONT, LHD

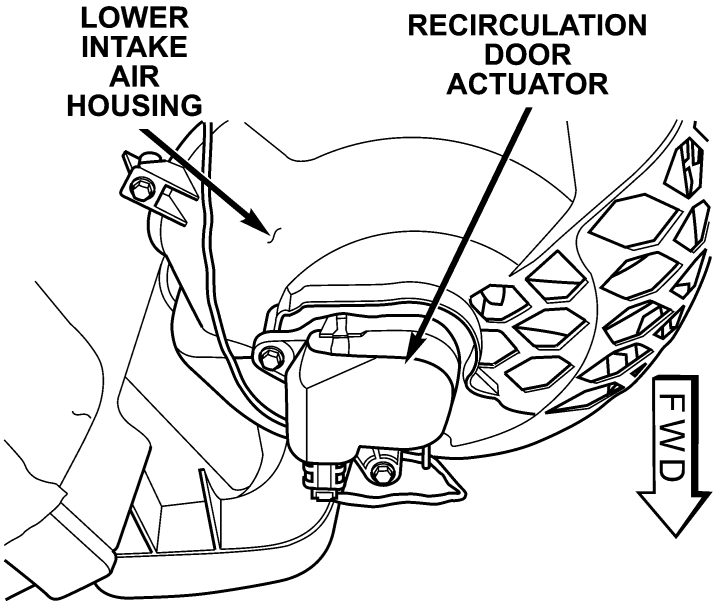

80af6683

8.5 HEATING & A/C (Continued)

8.5.3 ACTUATORS – FRONT, RHD

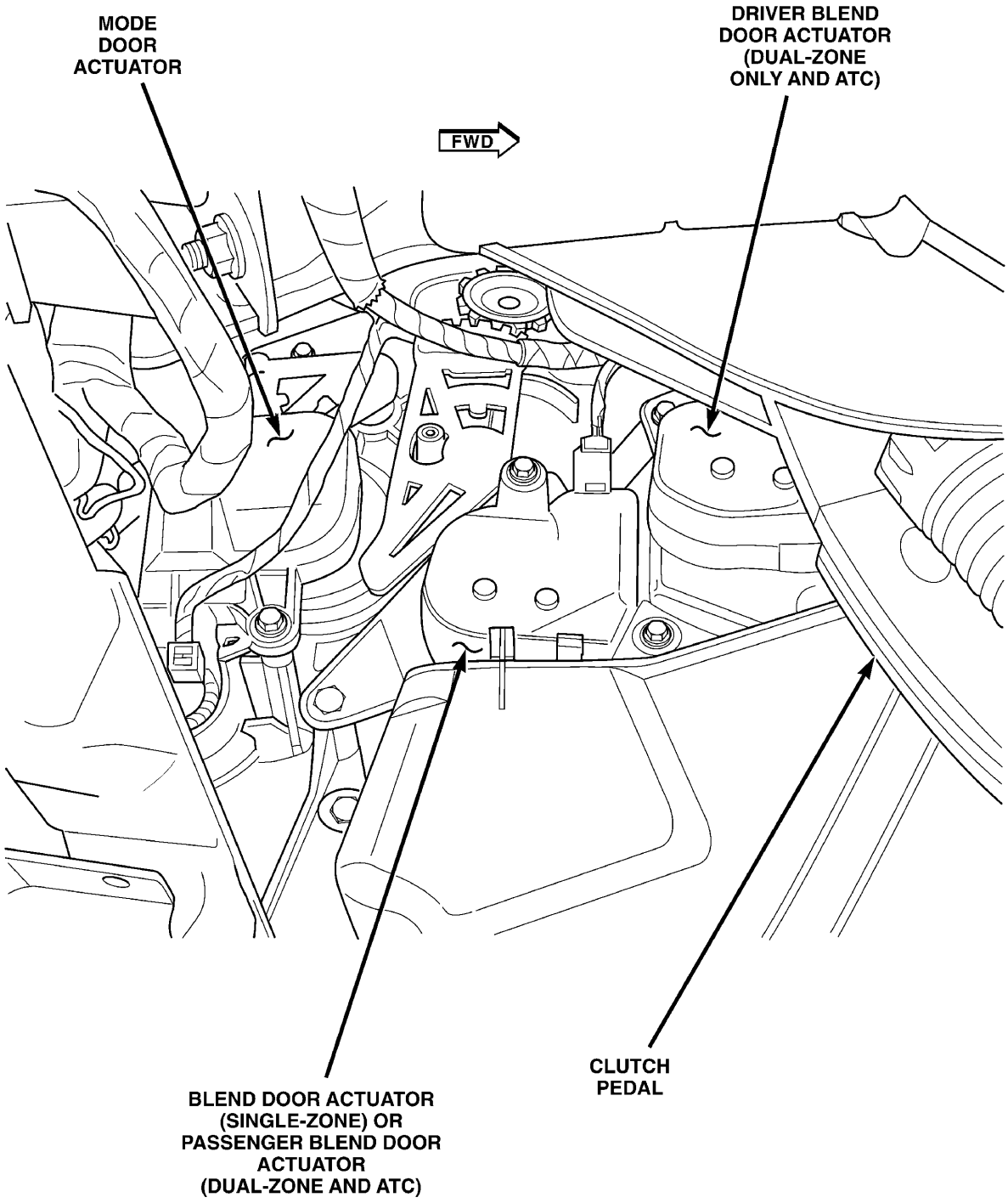

8.5.4 ACTUATOR – FRONT, RHD

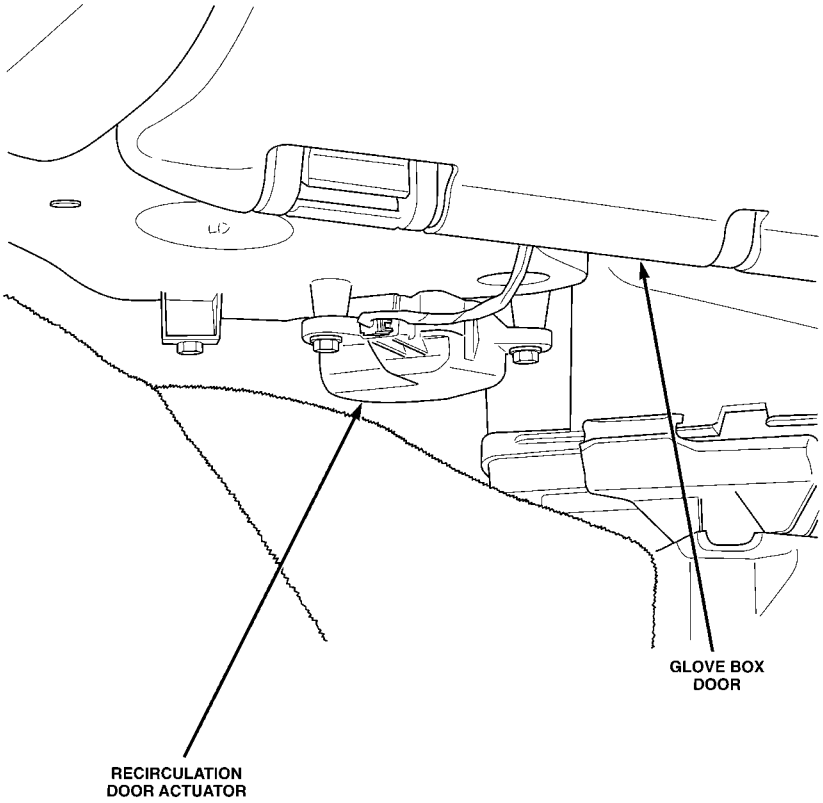

80bfa798

8.5.5 EVAPORATOR TEMPERATURE SENSOR, LHD, RG ATC & MTC

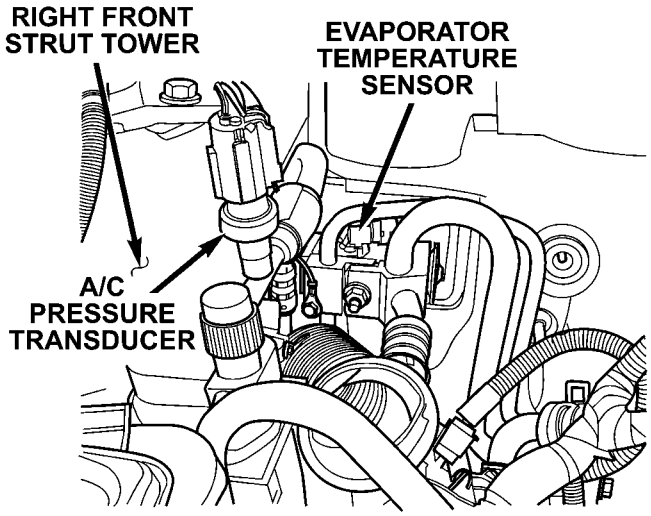

80af6663

8.5 HEATING & A/C (Continued)

8.5.6 EVAPORATOR TEMPERATURE SENSOR, RHD

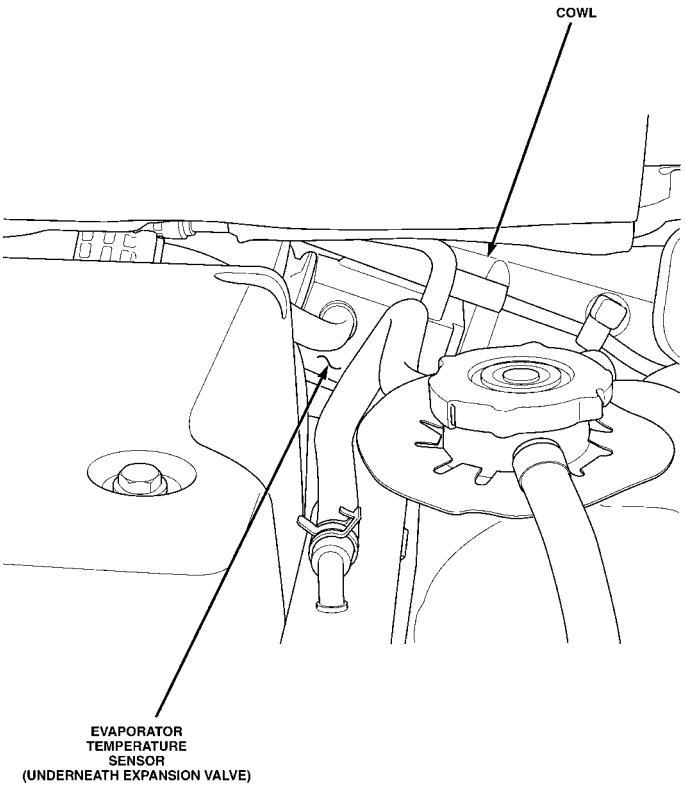

8.5.7 EVAPORATOR TEMPERATURE SENSOR, LHD, RS ATC & MTC

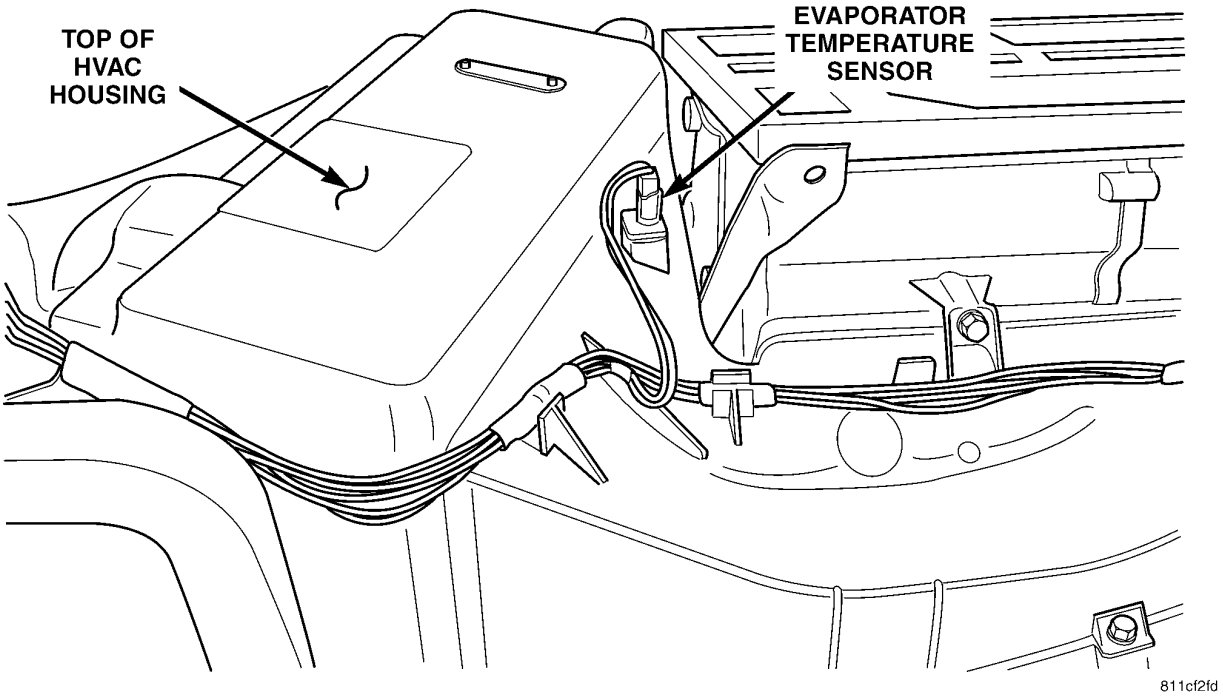

8.5.8 C202 CONNECTOR

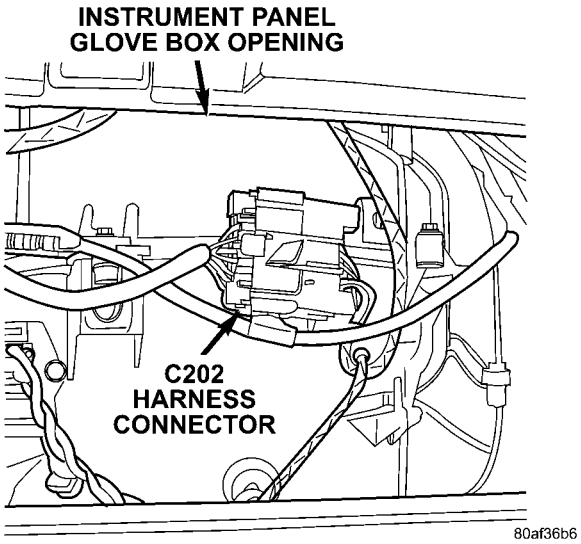

8.5.9 ACTUATORS – REAR

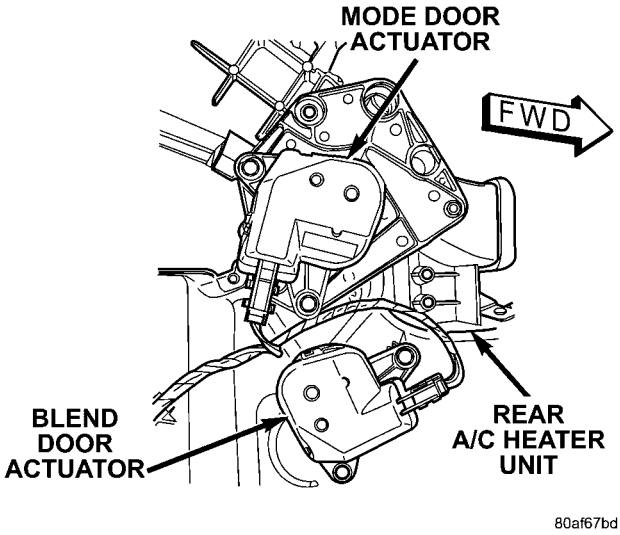

8.5.10 REAR A/C HEATER UNIT CONNECTOR

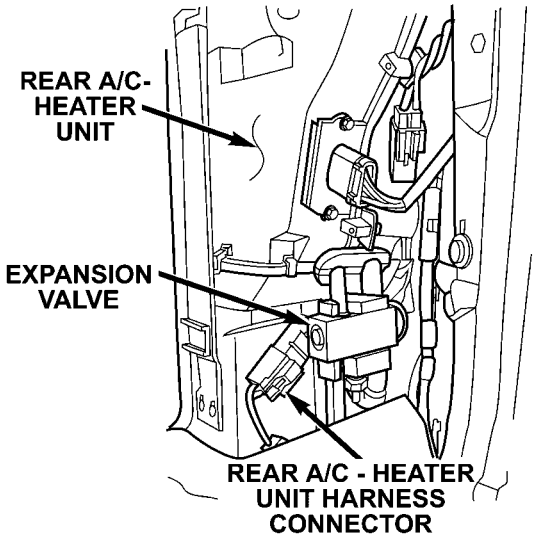

8.5 HEATING & A/C (Continued)

8.5.11 DIESEL CABIN HEATER ASSIST (DCHA) ASSEMBLY

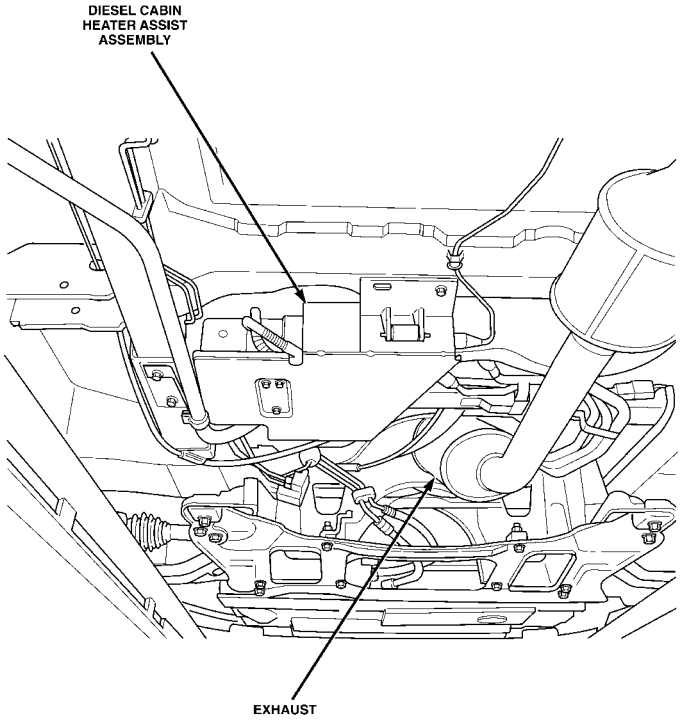

8.5.12 C330 HARNESS CONNECTOR (DCHA)

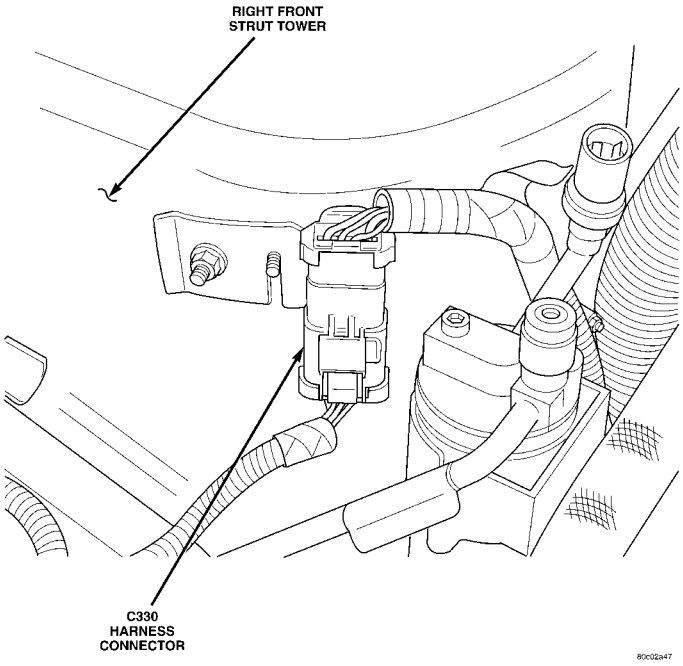

8.5.13 C331 HARNESS CONNECTOR (DCHA)

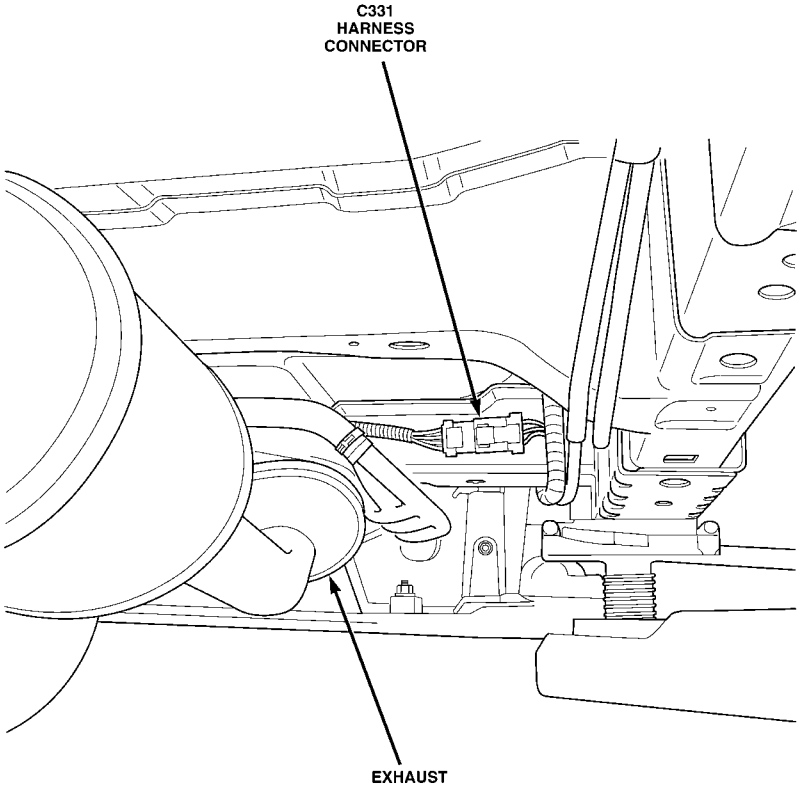

80c02a19

8.6 INTEGRATED POWER MODULE & FRONT CONTROL MODULE – TYPICAL

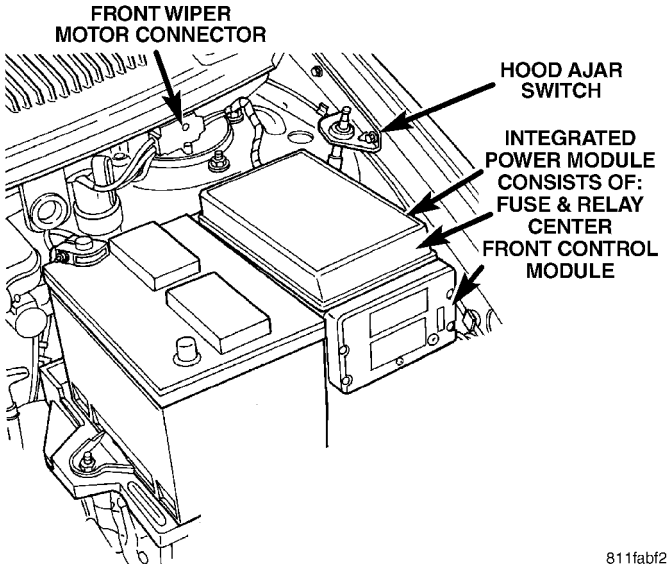

811fabf2

8.7 MEMORY SYSTEM

8.7.1 MEMORY SEAT/MIRROR/ADJUSTABLE PEDALS MODULE/SEAT MOTORS

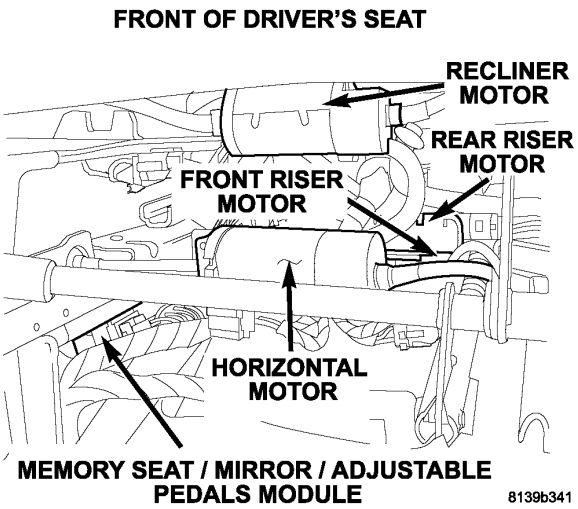

8.7.2 MEMORY SEAT/MIRROR/ADJUSTABLE PEDALS MODULE CIRCUIT BREAKER

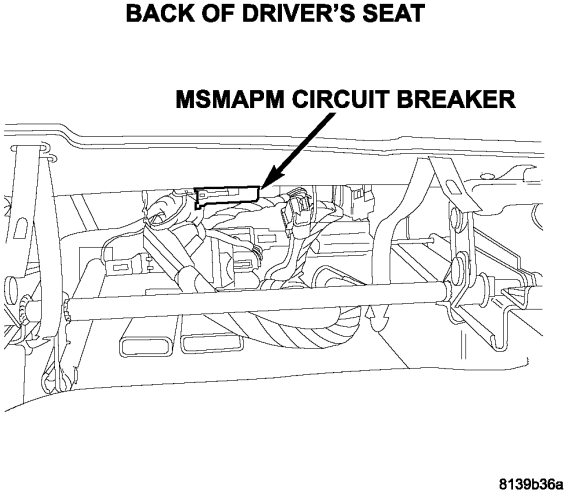

8.8 OVERHEAD CONSOLE

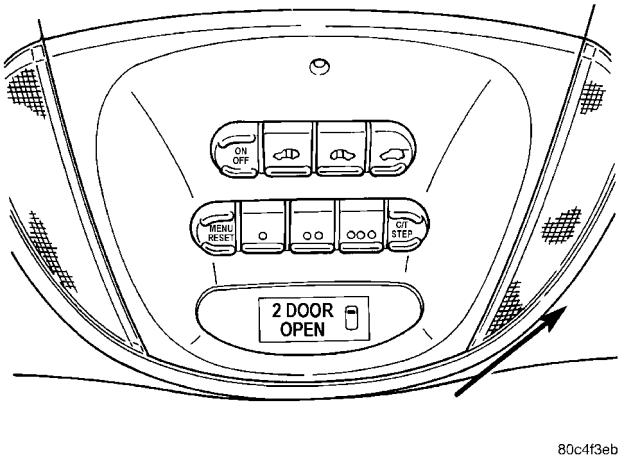

8.9 POWER FOLDING MIRRORS

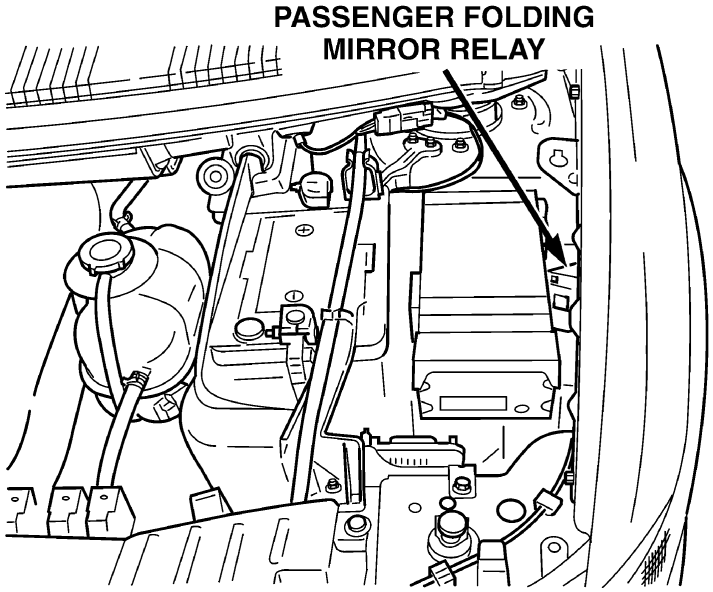

80bc532c

8.10 POWER LIFTGATE SYSTEM

8.10.1 MODULE

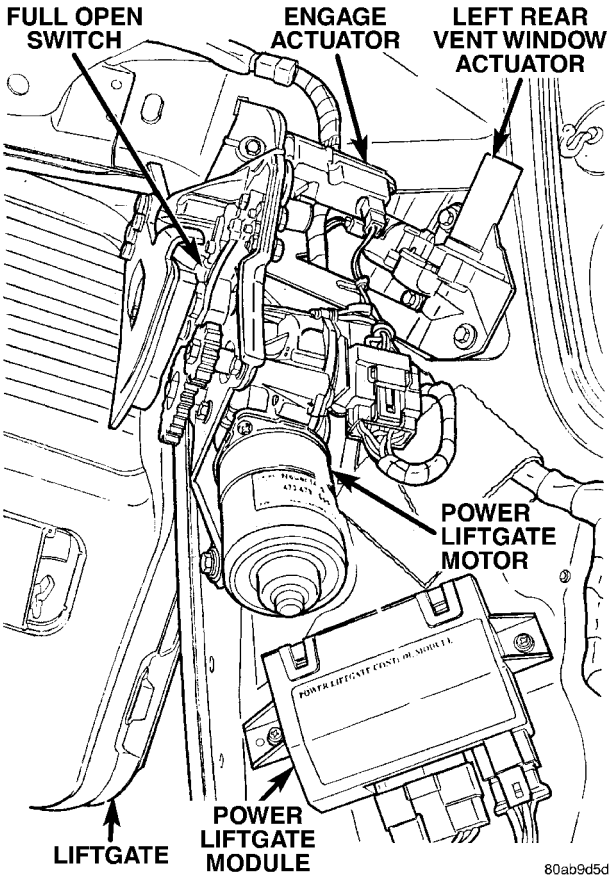

80ab9d5d

8.10 POWER LIFTGATE SYSTEM (Continued)

8.10.2 PINCH SENSORS (TAPE SWITCH)

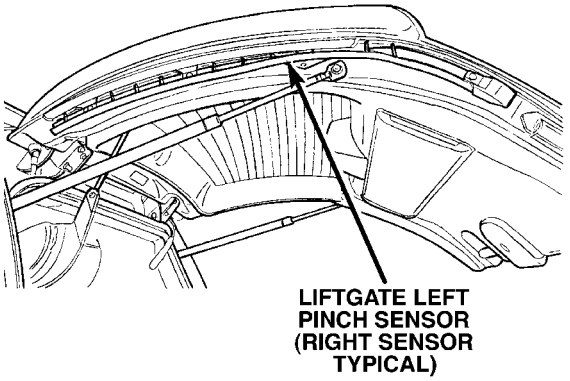

80ab9f6f

8.10.3 LATCH ASSEMBLY

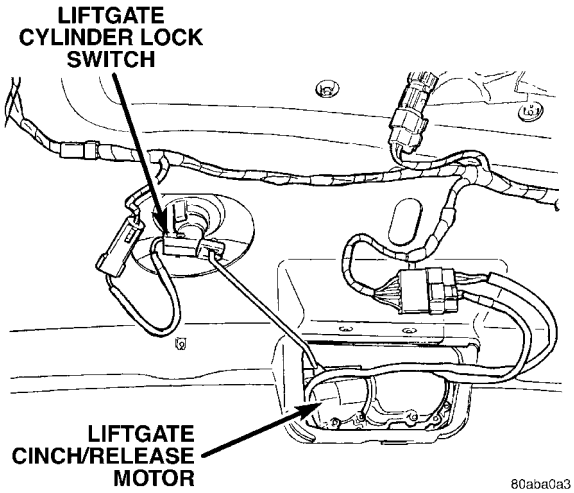

80aba0a3

8.11 POWER DOOR LOCK/RKE SYSTEM

8.11.1 DOOR LOCK MOTOR/AJAR SWITCH

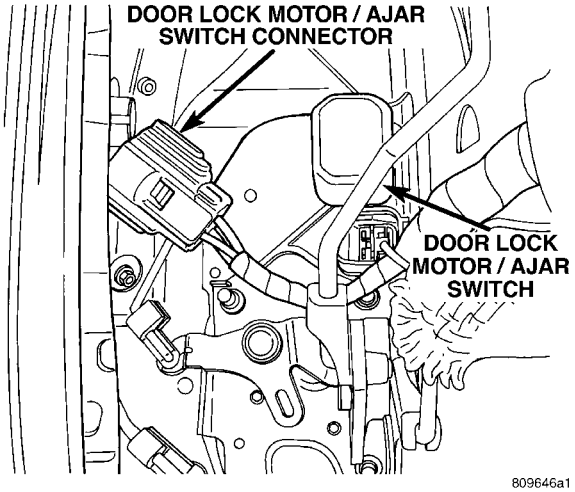

809646a1

8.11.2 CYLINDER LOCK SWITCH

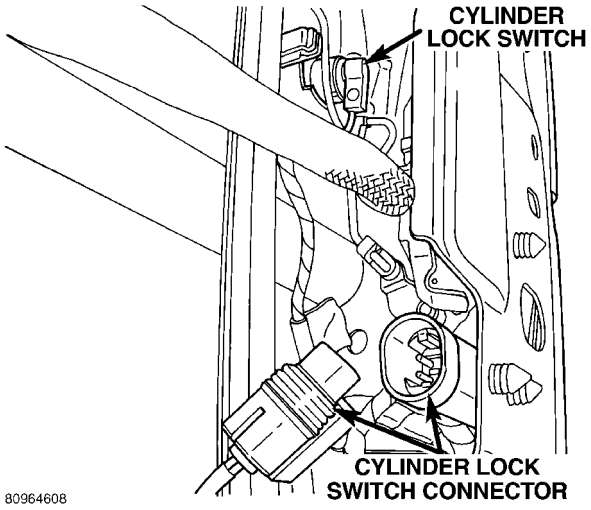

8.11.3 SENTRY KEY REMOTE ENTRY MODULE

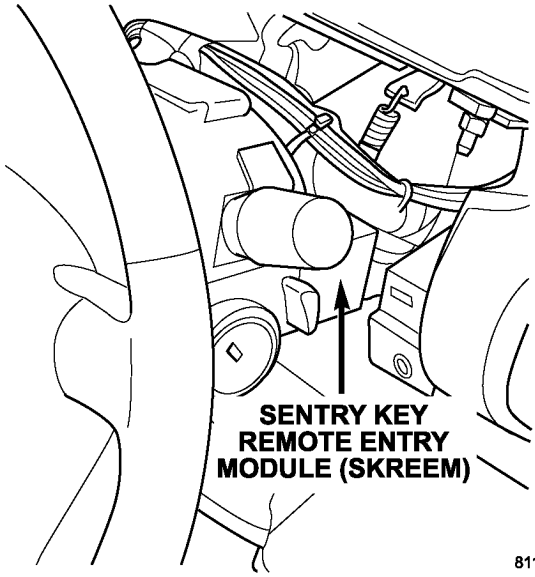

8.12 POWER SLIDING DOOR

8.12.1 MODULE

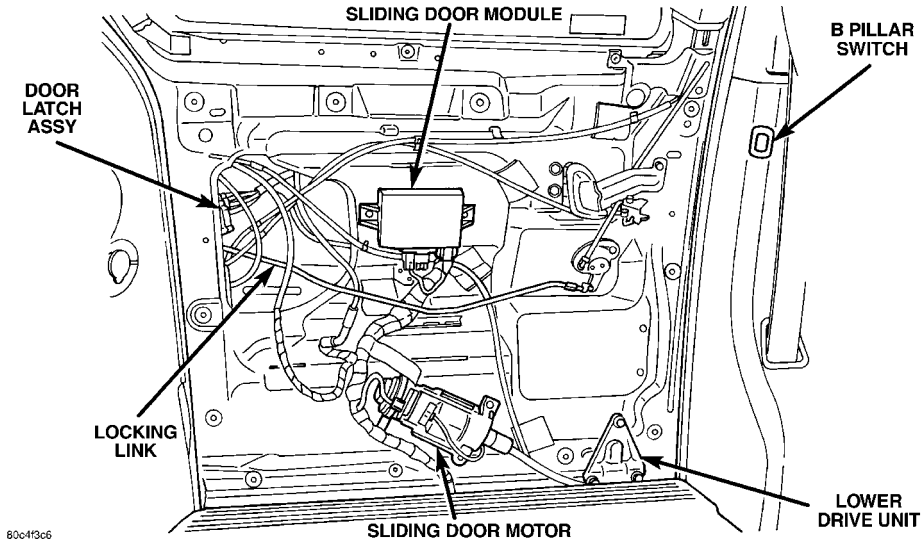

8.12 POWER SLIDING DOOR (Continued)

8.12.2 LOWER DRIVE UNIT

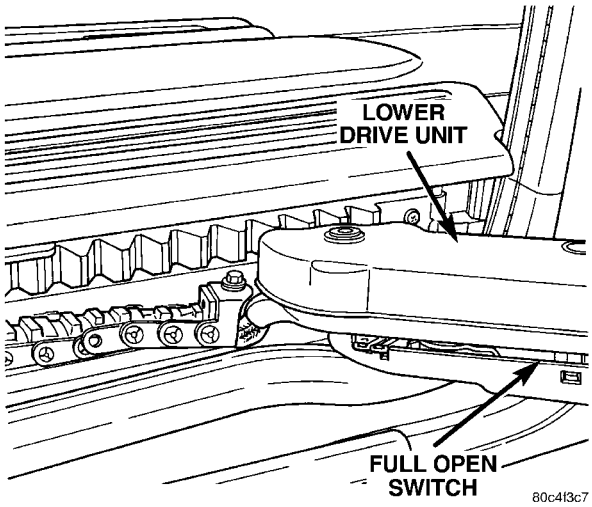

8.12.3 LATCH ASSEMBLY

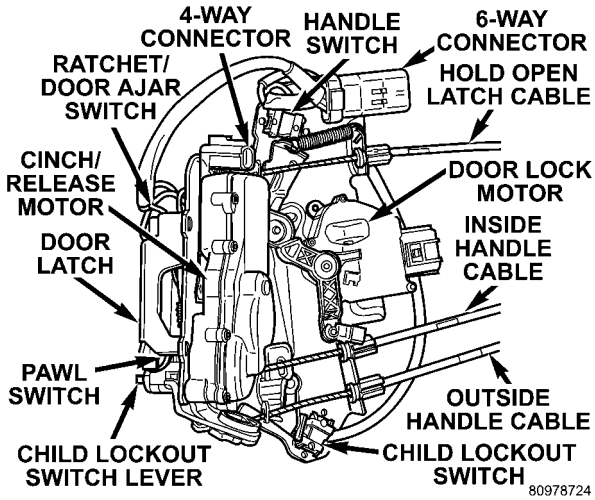

8.13 VEHICLE THEFT SECURITY SYSTEM

8.13.1 THATCHAM ALARM MODULE (EXPORT ONLY)

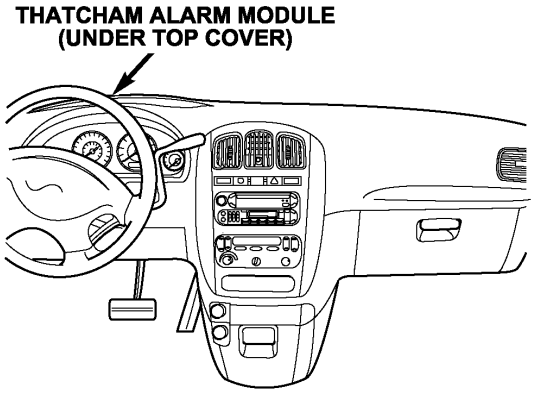

8.13.3 VTSS SIREN (EXPORT ONLY)

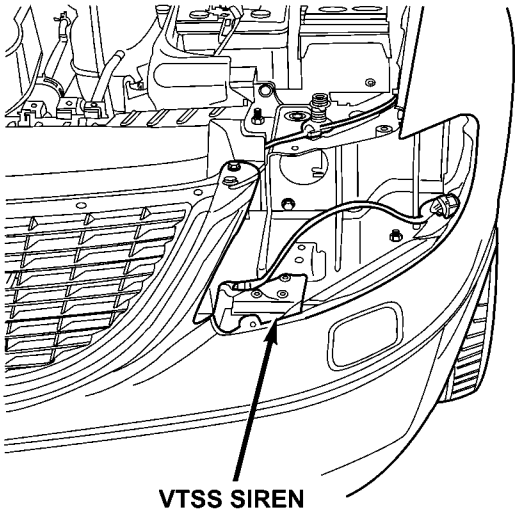

80bc5fae

8.13.4 FRONT INTRUSION SENSOR (EXPORT ONLY)

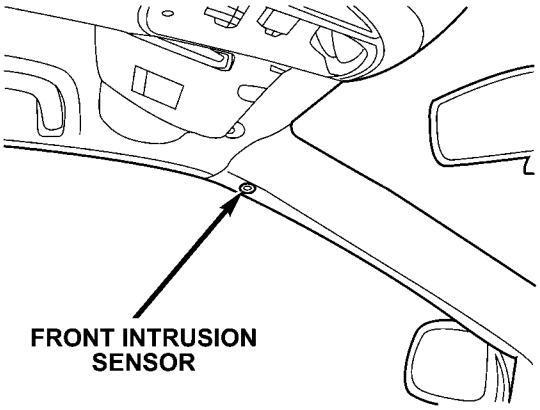

80bc5f9a

8.13.5 REAR INTRUSION SENSOR (EXPORT ONLY)

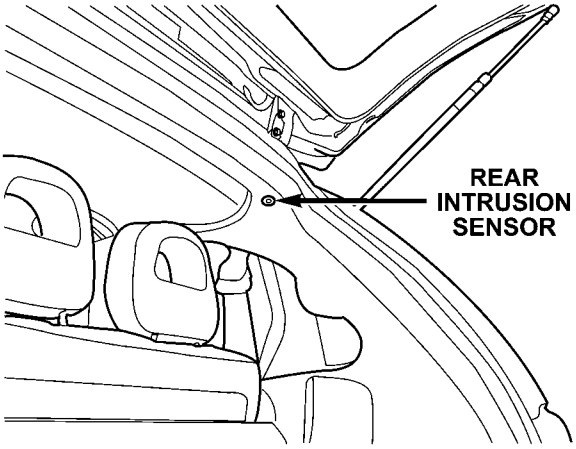

80bc5f84

NOTES

9.0 CONNECTOR PINOUTS

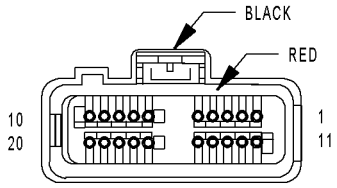

A/C-HEATER CONTROL C1 (MTC)

A/C-HEATER CONTROL C1 (MTC) - BLACK/RED 20 WAY

CAV	CIRCUIT	FUNCTION
1	Z24 18BK/OR	GROUND
2	C121 20DB/DG	SENSOR GROUND
3	C22 20LB/WT (3 ZONE)	REAR TEMPERATURE FEEDBACK SIGNAL
4	-	-
5	F850 20LB/PK (3 ZONE)	5 VOLT SUPPLY
6	-	-
7	C32 22DB/TN	RECIRCULATION DOOR DRIVER (A)
8	C54 22LB/YL (3 ZONE)	REAR BLEND DOOR DRIVER
9	C34 22DB/LB	COMMON DOOR DRIVER (B)
10	D25 20WT/VT	PCI BUS
11	-	-
12	C121 20DB/DG (3 ZONE)	REAR TEMPERATURE RETURN
13	F504 20GY/PK	IGNITION SWITCH OUTPUT (RUN)
14	E12 20OR/GY	PANEL LAMPS DRIVER
15	C21 22LB	EVAPORATOR TEMPERATURE SENSOR SIGNAL
16	C33 22LB/BR	PASSENGER BLEND DOOR DRIVER (A)
17	C61 22DB/LG (EXCEPT BASE)	DRIVER BLEND DOOR DRIVER (A)
18	C35 22LB/LG	MODE DOOR DRIVER (A)
19	C53 22LB (3 ZONE)	REAR MODE DOOR DRIVER
20	C154 20LB/OR (3 ZONE)	REAR COMMON DOOR DRIVER

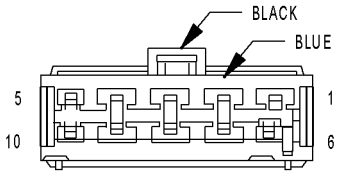

A/C-HEATER CONTROL C2 (MTC)

A/C-HEATER CONTROL C2 (MTC) - BLACK/BLUE 10 WAY

CAV	CIRCUIT	FUNCTION
1	-	-
2	C75 12DB/GY	BLOWER MOTOR HIGH DRIVER
3	C73 14DB/VT (EXCEPT EXPORT)	BLOWER MOTOR M2 DRIVER
3	C74 12DB/WT (EXPORT)	BLOWER MOTOR M3 DRIVER
4	Z134 12BK/LG	GROUND
5	C71 16DB/BR (EXPORT)	BLOWER MOTOR LOW DRIVER
6	-	-
7	-	-
8	-	-
9	C72 16DB/OR (EXCEPT EXPORT)	BLOWER MOTOR M1 DRIVER
9	C73 14DB/VT (EXPORT)	BLOWER MOTOR M2 DRIVER
10	C71 16DB/BR (EXCEPT EXPORT)	BLOWER MOTOR LOW DRIVER
10	C72 16DB/OR (EXPORT)	BLOWER MOTOR M1 DRIVER

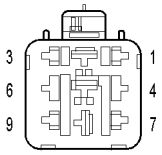

ADJUSTABLE PEDALS RELAY (EXCEPT EXPORT/EXCEPT MEMORY)

ADJUSTABLE PEDALS RELAY (EXCEPT EXPORT/EXCEPT MEMORY) - 9 WAY

CAV	CIRCUIT	FUNCTION
1	-	-
2	-	-
3	-	-
4	A108 18LG/RD	FUSED B(+)
5	A128 18RD/OR	ADJUSTABLE PEDALS RELAY OUTPUT
6	P201 20LG/DB	ADJUSTABLE PEDALS RELAY CONTROL
7	-	-
8	A108 18LG/RD	FUSED B(+)
9	-	-

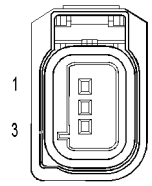

ADJUSTABLE PEDALS SENSOR (EXCEPT EXPORT)

ADJUSTABLE PEDALS SENSOR (EXCEPT EXPORT) - 3 WAY

CAV	CIRCUIT	FUNCTION
1	G11 18VT/TN (EXCEPT MEMORY)	ADJUSTABLE PEDALS SENSOR FEED
1	G11 20VT/TN (MEMORY)	ADJUSTABLE PEDALS SENSOR FEED
2	G12 18VT/BR (EXCEPT MEMORY)	ADJUSTABLE PEDALS SENSOR SIGNAL
2	G12 22VT/BR (MEMORY)	ADJUSTABLE PEDALS SENSOR SIGNAL
3	G912 18VT/WT (EXCEPT MEMORY)	ADJUSTABLE PEDALS SENSOR RETURN
3	G912 20VT/WT (MEMORY)	ADJUSTABLE PEDALS SENSOR RETURN

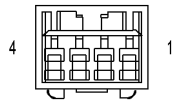

ADJUSTABLE PEDALS SWITCH (EXCEPT EXPORT)

ADJUSTABLE PEDALS SWITCH (EXCEPT EXPORT) - 4 WAY

CAV	CIRCUIT	FUNCTION
1	A128 18RD/OR (EXCEPT MEMORY)	ADJUSTABLE PEDALS RELAY OUTPUT
1	A114 18GY/RD (MEMORY)	FUSED B(+) (I.O.D.)
2	Z146 18BK/YL	GROUND
3	Q102 18OR/LB	ADJUSTABLE PEDALS SWITCH REARWARD
4	Q103 18OR/LG	ADJUSTABLE PEDALS SWITCH FORWARD

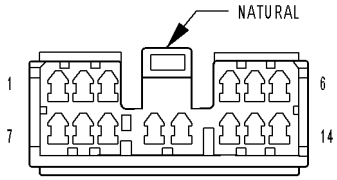

AMPLIFIER C1 (HIGHLINE AUDIO)

AMPLIFIER C1 (HIGHLINE AUDIO) - NATURAL 14 WAY

CAV	CIRCUIT	FUNCTION
1	X201 18DG (EXCEPT EX-PORT)	AMPLIFIED LEFT FRONT DOOR SPEAKER (+)
1	X201 20DG (EXPORT)	AMPLIFIED LEFT FRONT DOOR SPEAKER (+)
2	X202 18GY (EXCEPT EX-PORT)	AMPLIFIED RIGHT FRONT DOOR SPEAKER (+)
2	X202 20GY (EXPORT)	AMPLIFIED RIGHT FRONT DOOR SPEAKER (+)
3	X205 18GY/LG (EXCEPT EXPORT)	AMPLIFIED LEFT REAR SPEAKER (+)
3	X205 20GY/LG (EXPORT)	AMPLIFIED LEFT REAR SPEAKER (+)
4	X206 18DG/LG (EXCEPT EXPORT)	AMPLIFIED RIGHT REAR SPEAKER (+)
4	X206 20DG/LG (EXPORT)	AMPLIFIED RIGHT REAR SPEAKER (+)
5	X214 18DG/DB (EXCEPT EXPORT)	AMPLIFIED LEFT REAR TWEETER (+)
5	X214 20DG/DB (EXPORT)	AMPLIFIED LEFT REAR TWEETER (+)
6	X212 18GY/DB (EXCEPT EXPORT)	AMPLIFIED RIGHT REAR TWEETER (+)
6	X212 20GY/DB (EXPORT)	AMPLIFIED RIGHT REAR TWEETER (+)
7	X291 18DG/BR (EXCEPT EXPORT)	AMPLIFIED LEFT FRONT DOOR SPEAKER (-)
7	X291 20DG/BR (EXPORT)	AMPLIFIED LEFT FRONT DOOR SPEAKER (-)
8	X292 18GY/BR (EXCEPT EXPORT)	AMPLIFIED RIGHT FRONT DOOR SPEAKER (-)
8	X292 20GY/BR (EXPORT)	AMPLIFIED RIGHT FRONT DOOR SPEAKER (-)
9	X295 18GY/DG (EXCEPT EXPORT)	AMPLIFIED LEFT REAR SPEAKER (-)
9	X295 20GY/DG (EXPORT)	AMPLIFIED LEFT REAR SPEAKER (-)
10	-	-
11	-	-
12	X296 18DG/GY (EXCEPT EXPORT)	AMPLIFIED RIGHT REAR SPEAKER (-)
12	X296 20DG/GY (EXPORT)	AMPLIFIED RIGHT REAR SPEAKER (-)
13	X284 18DG/TN (EXCEPT EXPORT)	AMPLIFIED LEFT REAR TWEETER (-)
13	X284 20DG/TN (EXPORT)	AMPLIFIED LEFT REAR TWEETER (-)
14	X282 18GY/TN (EXCEPT EXPORT)	AMPLIFIED RIGHT REAR TWEETER (-)
14	X282 20GY/TN (EXPORT)	AMPLIFIED RIGHT REAR TWEETER (-)

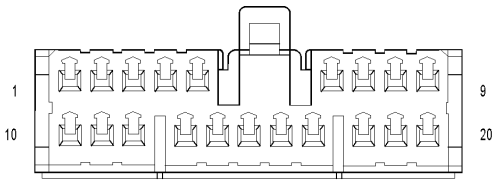

AMPLIFIER C2
(HIGHLINE AUDIO)

AMPLIFIER C2 (HIGHLINE AUDIO) - 20 WAY

CAV	CIRCUIT	FUNCTION
1	X153 18DG/YL (EXCEPT EXPORT)	LEFT INSTRUMENT PANEL SPEAKER (+)
1	X153 20DG/YL (EXPORT)	LEFT INSTRUMENT PANEL SPEAKER (+)
2	X154 18GY/YL (EXCEPT EXPORT)	RIGHT INSTRUMENT PANEL SPEAKER (+)
2	X154 20GY/YL (EXPORT)	RIGHT INSTRUMENT PANEL SPEAKER (+)
3	-	-
4	A116 16YL/RD	FUSED B (+)
5	-	-
6	D25 20WT/VT	PCI BUS
7	X51 20DG/DB	LEFT REAR SPEAKER (+)
8	X52 20GY/DB	RIGHT REAR SPEAKER (+)
9	Z513 16BK	GROUND
10	X155 18DG/LB (EXCEPT EXPORT)	LEFT INSTRUMENT PANEL SPEAKER (-)
10	X155 20DG/LB (EXPORT)	LEFT INSTRUMENT PANEL SPEAKER (-)
11	X156 18GY/LB (EXCEPT EXPORT)	RIGHT INSTRUMENT PANEL SPEAKER (-)
11	X156 20GY/LB (EXPORT)	RIGHT INSTRUMENT PANEL SPEAKER (-)
12	-	-
13	A116 16YL/RD	FUSED B (+)
14	-	-
15	-	-
16	-	-
17	F306 20DB/PK	FUSED ACCESSORY RELAY OUTPUT
18	X57 20DG/OR	LEFT REAR SPEAKER (-)
19	X58 20GY/OR	RIGHT REAR SPEAKER (-)
20	Z513 16BK	GROUND

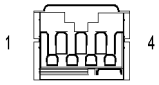

ATC
REMOTE
SENSOR
(ATC)

ATC REMOTE SENSOR (ATC) - 4 WAY

CAV	CIRCUIT	FUNCTION
1	F600 20LB/PK	PROTECTED IGNITION
2	D40 20WT/LB	KDB NO. 2 CLOCK
3	C905 20BR/LB	SENSOR RETURN
4	D18 20WT/YL	KDB NO. 2 DATA

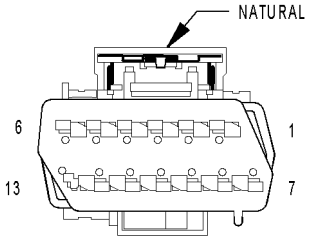

AUTO TEMP
CONTROL C1

AUTO TEMP CONTROL C1 - NATURAL 13 WAY

CAV	CIRCUIT	FUNCTION
1	C161 22LB/WT	DRIVER BLEND DOOR DRIVER (B)
2	C61 22DB/LG	DRIVER BLEND DOOR DRIVER (A)
3	C133 22DB/WT	PASSENGER BLEND DOOR DRIVER (B)
4	C33 22LB/BR	PASSENGER BLEND DOOR DRIVER (A)
5	C132 22DB/YL	RECIRCULATION DOOR DRIVER (B)
6	C32 22DB/TN	RECIRCULATION DOOR DRIVER (A)
7	C135 22DB/GY	MODE DOOR DRIVER (B)
8	C35 22LB/LG	MODE DOOR DRIVER (A)
9	C53 22LB	REAR MODE DOOR DRIVER (A)
10	C154 22LB/OR	REAR MODE DOOR DRIVER (B)
11	C54 22LB/YL	REAR BLEND DOOR DRIVER (A)
12	C169 22DB/OR	REAR BLEND DOOR DRIVER (B)
13	-	-

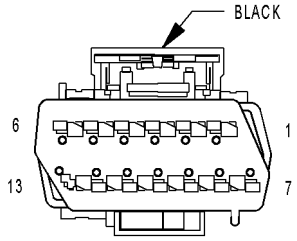

AUTO TEMP CONTROL C2

AUTO TEMP CONTROL C2 - BLACK 13 WAY

CAV	CIRCUIT	FUNCTION
1	C21 22LB	EVAPORATOR TEMPERATURE SENSOR SIGNAL
2	C121 20DB/DG (LHD)	SENSOR GROUND
2	C121 22DB/DG (RHD)	SENSOR GROUND
3	E12 20OR/GY	PANEL LAMPS DRIVER
4	A114 18GY/RD	FUSED B(+) (I.O.D.)
5	F504 20GY/PK	FUSED IGNITION SWITCH OUTPUT (RUN)
6	D25 20WT/VT	PCI BUS
7	C56 22DB/VT (LHD)	BLOWER MOTOR CONTROL
7	C56 22DB/LB (RHD)	BLOWER MOTOR CONTROL
8	C59 22DB/LB	REAR BLOWER MOTOR CONTROL
9	D22 20WT/TN (3 ZONE)	KDB CLOCK
10	D17 22WT/DG	KDB DATA
11	Z24 18BK/OR	GROUND
12	-	-
13	-	-

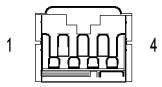

AUTO TEMP CONTROL C3

AUTO TEMP CONTROL C3 - 4 WAY

CAV	CIRCUIT	FUNCTION
1	F600 20LB/PK	PROTECTED IGNITION
2	D40 20WT/LB	KDB NO. 2 CLOCK
3	C905 20BR/LB	SENSOR RETURN
4	D18 20WT/YL	KDB NO. 2 DATA

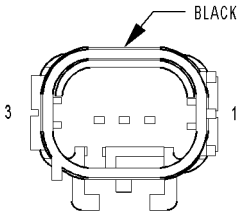

BELT TENSION SENSOR (OCCUPANT SENSING)

BELT TENSION SENSOR (OCCUPANT SENSING) - BLACK 3 WAY

CAV	CIRCUIT	FUNCTION
1	R86 20LG/LB	BELT TENSION SENSOR FEED
2	R986 20LG/BR	BELT TENSION SENSOR GROUND
3	D105 20WT/OR	BELT TENSION SENSOR SIGNAL

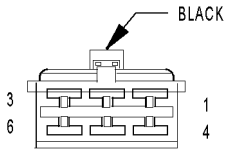

BLOWER MOTOR RESISTOR C1 (MTC)

BLOWER MOTOR RESISTOR C1 (MTC) - BLACK 6 WAY

CAV	CIRCUIT	FUNCTION
1	C75 12DB/GY (EXPORT)	BLOWER MOTOR HIGH DRIVER
2	C75 12DB/GY (EXCEPT EXPORT)	BLOWER MOTOR HIGH DRIVER
2	C74 12DB/WT (EXPORT)	BLOWER MOTOR M3 DRIVER
3	C73 14DB/VT	BLOWER MOTOR M2 DRIVER
4	C7 12DB	FUSED FRONT BLOWER MOTOR RELAY OUTPUT
5	C72 16DB/OR	BLOWER MOTOR M1 DRIVER
6	C71 16DB/BR	BLOWER MOTOR LOW DRIVER

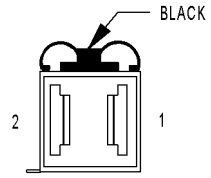

BLOWER MOTOR RESISTOR C2 (MTC)

BLOWER MOTOR RESISTOR C2 (MTC) - BLACK 2 WAY

CAV	CIRCUIT	FUNCTION
1	C70 12DG	REAR BLOWER HIGH SPEED
2	C7 12BK	HIGH SPEED BLOWER MOTOR

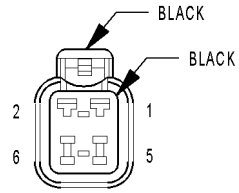

BODY CONTROL MODULE C1

BODY CONTROL MODULE C1 - BLACK/BLACK 6 WAY

CAV	CIRCUIT	FUNCTION
1	A101 12VT/RD	FUSED B(+)
2	A701 16BR/RD	FUSED B(+) (HAZARD)
3	Z100 12BK/TN	GROUND
4	-	-
5	A101 12VT/RD	FUSED B(+)
6	-	-

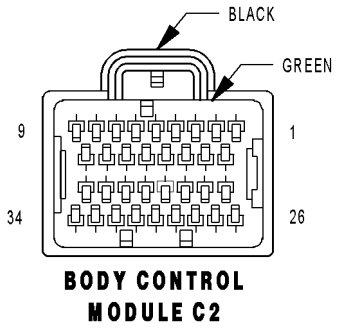

BODY CONTROL MODULE C2

BODY CONTROL MODULE C2 - BLACK/GREEN 34 WAY

CAV	CIRCUIT	FUNCTION
1	L61 20WT/LB	LEFT FRONT TURN SIGNAL DRIVER
2	L63 18WT/DG	LEFT REAR TURN SIGNAL DRIVER
3	L60 18WT/TN	RIGHT FRONT TURN SIGNAL DRIVER
4	L62 18WT/BR	RIGHT REAR TURN SIGNAL DRIVER
5	F20 20PK/WT	FUSED IGNITION SWITCH OUTPUT (RUN-START)
6	G25 22VT/TN	LIFTGATE SWITCH MUX
7	A114 18GY/RD	FUSED B(+) (I.O.D.)
8	-	-
9	L1 18WT/LG	BACK-UP LAMP FEED
10	P3 20TN/WT	LEFT FRONT DOOR LOCK DRIVER
11	P2 20TN/GY	RIGHT FRONT DOOR LOCK DRIVER
12	P38 20TN/DB	RIGHT SLIDING DOOR LOCK DRIVER
13	-	-
14	-	-
15	Z15 18BK/TN	GROUND
16	G920 20VT/YL (MEMORY)	MEMORY SELECT SWITCH RETURN
17	G153 20VT/DG (POWER LIFTGATE)	LIFTGATE MODULE WAKE UP SIGNAL
18	P32 20TN/VT	LEFT SLIDING DOOR LOCK DRIVER
19	Z10 18BK/TN	GROUND
20	P5 20TN/OR	LEFT SLIDING DOOR UNLOCK DRIVER
21	P164 18LG/DB (EXPORT)	PASSENGER FOLDING MIRROR RELAY INPUT
22	P30 20TN/DG	LIFTGATE HANDLE SWITCH SENSE
23	-	-
24	G200 20VT/BR (MEMORY)	MEMORY SELECT SWITCH MUX
25	M22 20YL/OR	COURTESY LAMPS DRIVER
26	P4 20TN/BR	RIGHT FRONT DOOR UNLOCK DRIVER
27	P34 20TN/LB	RIGHT SLIDING DOOR UNLOCK DRIVER
28	P1 20TN/LG	LEFT FRONT DOOR UNLOCK DRIVER
29	P159 20TN/DG (EXPORT)	DRIVER FOLDING MIRROR FOLD DRIVER
30	P174 20TN/LB (EXPORT)	RIGHT FOLDING MIRROR UNFOLD DRIVER
31	P171 20TN/YL (EXPORT)	LEFT FOLDING MIRROR UNFOLD DRIVER
32	W13 18BR/LG	REAR WIPER MOTOR CONTROL
33	-	-
34	L38 20WT/YL (EXPORT)	REAR FOG LAMP SWITCH OUTPUT

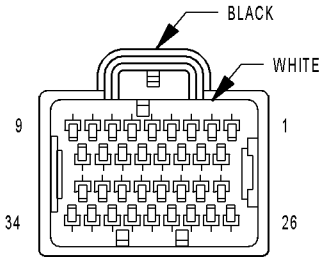

BODY CONTROL MODULE C3

BODY CONTROL MODULE C3 - BLACK/WHITE 34 WAY

CAV	CIRCUIT	FUNCTION
1	G23 22VT/DB (POWER SLIDING DOOR)	SLIDING DOORS OVERHEAD SWITCH MUX
2	D123 20WT/BR	FLASH PROGRAM ENABLE
3	G152 22VT/GY (POWER SLIDING DOOR)	RIGHT SLIDING DOOR WAKE UP SIGNAL
4	G151 22VT/BR (POWER SLIDING DOOR)	LEFT SLIDING DOOR WAKE UP SIGNAL
5	G76 20VT/YL	RIGHT SLIDING DOOR AJAR SWITCH SENSE
6	G75 20VT (LHD)	LEFT FRONT DOOR AJAR SWITCH SENSE
6	G74 20VT/WT (RHD)	RIGHT FRONT DOOR AJAR SWITCH SENSE
7	G74 20VT/WT (LHD)	RIGHT FRONT DOOR AJAR SWITCH SENSE
7	G75 20VT (RHD)	LEFT FRONT DOOR AJAR SWITCH SENSE
8	G77 22VT/GY	LEFT SLIDING DOOR AJAR SWITCH SENSE
9	E10 20OR/DG (3 ZONE HVAC)	PANEL LAMPS DRIVER
10	-	-
11	L162 20WT/VT (EXPORT)	RIGHT SIDE REPEATER LAMP FEED
12	G42 22VT/YL (POWER SLIDING DOOR)	RIGHT SLIDING DOOR PILLAR SWITCH MUX
13	-	-
14	G163 20VT/LB (EXPORT)	LEFT CYLINDER LOCK SWITCH MUX
15	G162 20VT/TN (EXPORT)	RIGHT CYLINDER LOCK SWITCH MUX
16	L50 18WT/TN (EXCEPT EXPORT)	BRAKE LAMP SWITCH OUTPUT
17	F503 20WT/PK (EXCEPT BASE)	FUSED IGNITION SWITCH OUTPUT (RUN)
18	G41 22VT/DG (POWER SLIDING DOOR)	LEFT SLIDING DOOR PILLAR SWITCH MUX
19	L163 20WT/BR (EXPORT)	LEFT SIDE REPEATER LAMP FEED
20	N4 20DB/WT	FUEL LEVEL SENSOR SIGNAL
21	G161 20VT/DG (LHD)	LEFT DOOR LOCK SWITCH MUX
21	G160 20VT/LG (RHD)	RIGHT DOOR LOCK SWITCH MUX
22	G160 20VT/LG (LHD)	RIGHT DOOR LOCK SWITCH MUX
22	G161 20VT/DG (RHD)	LEFT DOOR LOCK SWITCH MUX
23	D25 20WT/VT	PCI BUS
24	-	-
25	M11 20YL/VT	COURTESY LAMPS DRIVER
26	P31 20TN/YL (POWER RELEASE)	LIFTGATE RELEASE DRIVER
27	-	-
28	-	-
29	G78 20VT/OR	LIFTGATE AJAR SWITCH SENSE
30	G70 22VT/LB (EXPORT)	HOOD AJAR SWITCH SENSE
31	F500 18DG/PK (ABS)	FUSED IGNITION SWITCH OUTPUT (RUN)
32	-	-
33	M21 20YL/BR	COURTESY LAMPS DRIVER
34	M27 20YL/LB	READING LAMPS DRIVER

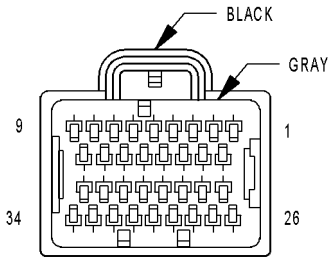

BODY CONTROL MODULE C4

BODY CONTROL MODULE C4 - BLACK/GRAY 34 WAY

CAV	CIRCUIT	FUNCTION
1	-	-
2	E12 20OR/GY	PANEL LAMPS DRIVER
3	E19 20OR/BR (AUTOMATIC HEADLAMPS)	HEADLAMP SWITCH DIMMER SIGNAL
4	-	-
5	G150 22VT/BR	INSTRUMENT CLUSTER WAKE UP SENSE
6	-	-
7	P162 20LG/DG (EXPORT)	PASSENGER FOLDING MIRROR RELAY CONTROL
8	-	-
9	L161 20WT/LG	LEFT TURN INDICATOR DRIVER
10	F504 20GY/PK	FUSED IGNITION SWITCH OUTPUT (RUN)
11	E14 20OR/TN	PANEL LAMPS DRIVER
12	E13 20OR/WT	PANEL LAMPS DRIVER
13	X920 22GY/OR (REMOTE AUDIO)	RADIO CONTROL MUX RETURN
14	G900 20VT/DB	IGNITION SWITCH SENSE RETURN
15	-	-
16	-	-
17	L160 20WT/TN	RIGHT TURN INDICATOR DRIVER
18	-	-
19	-	-
20	-	-
21	-	-
22	G902 22VT/LB	MULTI-FUNCTION SWITCH MUX RETURN
23	-	-
24	-	-
25	-	-
26	-	-
27	-	-
28	-	-
29	-	-
30	-	-
31	-	-
32	B27 20DG/WT (TRACTION CONTROL)	TRACTION CONTROL SWITCH SENSE
33	P136 20TN/YL (EXPORT)	FOLDING MIRROR SWITCH SENSE
34	G26 22VT/OR	CHIME DRIVER

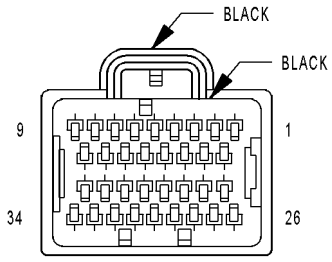

BODY CONTROL MODULE C5

BODY CONTROL MODULE C5 - BLACK/BLACK 34 WAY

CAV	CIRCUIT	FUNCTION
1	L91 22WT/DB (LHD)	HAZARD SWITCH SENSE
1	L91 20WT/DB (RHD)	HAZARD SWITCH SENSE
2	-	-
3	-	-
4	-	-
5	-	-
6	-	-
7	-	-
8	-	-
9	-	-
10	G20 20VT/BR	IGNITION SWITCH SENSE
11	-	-
12	-	-
13	-	-
14	-	-
15	-	-
16	G926 22VT/WT (ATC/ EXPORT MTC)	REAR WIPER SWITCH MUX RETURN
17	L900 22WT/YL	HEADLAMP SWITCH MUX RETURN
18	L307 20WT/BR	HEADLAMP SWITCH MUX
19	-	-
20	-	-
21	-	-
22	-	-
23	-	-
24	-	-
25	L36 20WT/DB (EXPORT)	REAR FOG LAMP INDICATOR DRIVER
26	X20 22GY/WT (REMOTE AUDIO)	RADIO CONTROL MUX
27	G194 22VT/LG	HIGH BEAM/FRONT WASHER SWITCH MUX
28	W26 22BR/DB (PREMIUM/ LUXURY/EXPORT)	REAR WIPER SWITCH MUX
29	W52 22BR/YL	FRONT WIPER SWITCH MUX
30	E2 22OR/BR	PANEL LAMPS DIMMER SIGNAL
31	L305 20WT/LB	TURN SIGNAL SWITCH MUX
32	-	-
33	-	-
34	L39 22WT/OR (HIGHLINE)	FRONT FOG LAMP INDICATOR DRIVER



BRAKE FLUID LEVEL SWITCH

BRAKE FLUID LEVEL SWITCH - 2 WAY

CAV	CIRCUIT	FUNCTION
1	B20 20DG/OR	BRAKE FLUID LEVEL SWITCH SENSE
2	Z420 20BK/OR	GROUND

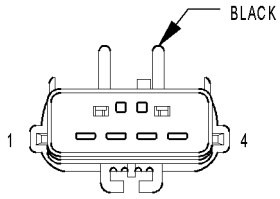

C112
(GAS)

C112 (GAS) - BLACK (BODY SIDE)

CAV	CIRCUIT
1	R80 20VT/LB
2	R82 20WT/LB
3	G31 18VT/LG (EXCEPT OCCUPANT SENSING)
3	G31 18WT/LG (OCCUPANT SENSING)
4	K900 20DB/DG

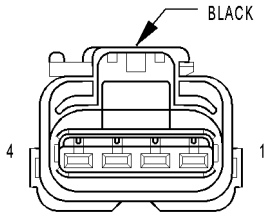

C112
(GAS)

C112 (GAS) - BLACK (FRONT END LIGHTING SIDE)

CAV	CIRCUIT
1	R80 18VT/LB
2	R82 18WT/LB
3	G31 18VT/LG
4	K900 18DB/DG

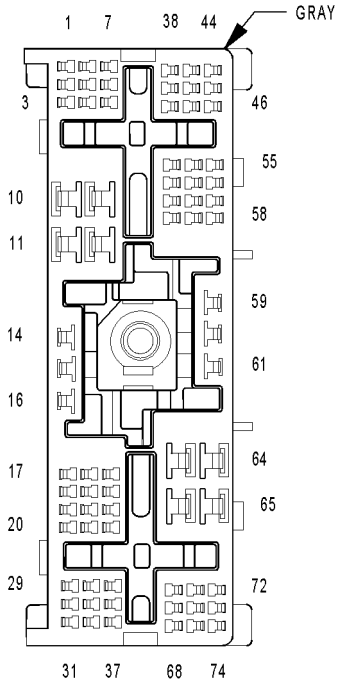

C200

C200 - GRAY (BODY SIDE)

CAV	CIRCUIT
1	C151 18LB/DG (3 ZONE MTC EXCEPT EXPORT)
1	B25 20DG/WT (EXPORT)
2	A106 20LB/RD
3	A108 18LG/RD (POWER MIRROR EXCEPT EXPORT)
3	A108 20LG/RD (POWER MIRROR EXPORT)
4	C59 20DB/LB (3 ZONE ATC)
4	C152 16LB/LG (3 ZONE MTC)
5	P159 20TN/DG (EXPORT)
6	K32 18DB/YL
7	C53 20LB (3 ZONE HVAC)
8	C16 20DB/GY
9	D17 20WT/DG (3 ZONE ATC)
9	C22 20LB/WT (3 ZONE MTC)
10	C50 12DB/OR (3 ZONE MTC)
10	L13 20WT/YL (EXPORT)
11	C7 12DB
12	C153 12DB/BR (3 ZONE MTC)
12	D123 20WT/BR (RHD)
13	Z849 12BK/OR (MEMORY DIESEL)
13	Z408 18BK/LG (MEMORY EXCEPT EXPORT)
14	A105 18DB/RD
15	A114 16GY/RD
16	F306 20DB/PK (HIGHLINE AUDIO/EXCEPT EXPORT)
16	F306 16DB/PK (LOWLINE AUDIO/EXPORT)
17	C169 20DB/OR (3 ZONE ATC)
17	C154 20LB/OR (3 ZONE MTC)
18	D22 20WT/TN (3 ZONE ATC)
18	C121 20DB/DG (3 ZONE MTC)
19	P160 18TN/LG (EXPORT)
20	-
21	F2 18PK/YL
22	Q102 18OR/LB (EXCEPT EXPORT)
22	L78 18WT/OR (EXPORT)
23	Q103 18OR/LG (EXCEPT EXPORT)
23	P174 20TN/LB (EXPORT)
24	D25 20WT/VT
25	P64 22TN (LHD MEMORY)
25	R79 20LB/VT (RHD)
26	P65 22TN/VT (LHD MEMORY)
26	R81 20LB/WT (RHD)
27	P66 22TN/LG (RHD MEMORY)
28	P67 22TN/OR (RHD MEMORY)
29	F20 20PK/WT
30	F100 18PK/VT
31	F201 20PK/OR (ORC)
32	F504 20GY/PK (3 ZONE ATC)
32	F850 20LB/PK (3 ZONE MTC)
33	P68 22TN/YL (RHD MEMORY)
34	P69 22TN/DB (LHD MEMORY)
35	R21 20LB/WT (SIDE AIRBAG)
36	R23 20LB/YL (SIDE AIRBAG)
37	R22 20WT/LB (SIDE AIRBAG)
38	R24 20YL/LB (SIDE AIRBAG)
39	R79 20LB/VT (LHD)
39	D96 18WT/LB (RHD)
40	R80 20VT/LB (LHD)
40	Z109 18BK/GY (RHD)
41	R81 20LB/WT (LHD)
41	A645 20RD/VT (RHD)
42	R82 20WT/LB (LHD)

42	G945 20VT/DG (RHD)
43	A128 18RD/OR (EXCEPT MEMORY/EXCEPT EXPORT)
44	P70 20TN/LB (RHD MEMORY)
45	P71 20TN/DG (LHD MEMORY)
46	P72 20TN/GY (RHD MEMORY)
47	P73 20TN/YL (LHD MEMORY)
48	P74 20TN/DB (RHD MEMORY)
49	P75 20TN/LG (LHD MEMORY)
49	R80 20VT/LB (RHD)
50	P112 22TN/OR (LUXURY EXCEPT HANDS FREE/EXCEPT EXPORT)
50	R82 20WT/LB (RHD)
51	P171 20TN/YL (EXPORT)
51	P114 22TN/WT (LUXURY EXCEPT HANDS FREE/EXCEPT EXPORT)
52	P7 22LG/DG (HEATED SEATS)
53	P8 22LG/WT (HEATED SEATS)
54	C154 20LB/OR (3 ZONE HVAC)
55	X156 20GY/LB (EXPORT)
55	X156 18GY/LB (HIGHLINE AUDIO EXCEPT EXPORT)
56	X154 20GY/YL (EXPORT)
56	X154 18GY/YL (HIGHLINE AUDIO EXCEPT EXPORT)
57	P162 18LG/DG (EXPORT)
58	T751 20YL
59	-
60	A701 18BR/RD
61	X3 20DG/VT
62	X153 20DG/YL (EXPORT LOWLINE AUDIO)
62	X53 20DG (LOWLINE AUDIO)
63	X154 20GY/YL (EXPORT LOWLINE AUDIO)
63	X54 20GY (LOWLINE AUDIO)
64	X155 20DG/LB (EXPORT LOWLINE AUDIO)
64	X55 20DG/BR (LOWLINE AUDIO)
65	X156 20GY/LB (EXPORT LOWLINE AUDIO)
65	X56 20GY/BR (LOWLINE AUDIO)
66	C54 20LB/YL (3 ZONE HVAC)
67	V37 20VT
68	X51 20DG/DB
69	X52 20GY/DB
70	X57 20DG/OR
71	X58 20GY/OR
72	X153 20DG/YL (EXPORT)
72	X153 18DG/YL (HIGHLINE AUDIO EXCEPT EXPORT)
73	K900 20DB/DG
74	X155 20DG/LB (EXPORT)
74	X155 18DG/LB (HIGHLINE AUDIO EXCEPT EXPORT)

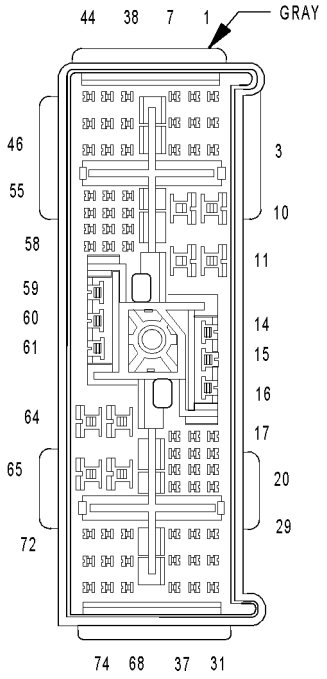

C200

C200 - GRAY (INSTRUMENT PANEL SIDE)

CAV	CIRCUIT
1	C151 18LB/DG (3 ZONE MTC EXCEPT EXPORT)
1	B25 20DG/WT (EXPORT)
2	A106 20LB/RD
3	A108 20LG/RD (POWER MIRROR)
4	C59 22DB/LB (3 ZONE ATC)
4	C152 16LB/LG (3 ZONE MTC)
5	P159 20TN/DG (EXPORT)
6	K32 18DB/YL
7	C53 22LB (3 ZONE HVAC)
8	C16 20DB/GY (HEATED MIRROR)
9	D17 22WT/DG (3 ZONE ATC)
9	C22 20LB/WT (3 ZONE MTC)
10	C50 12DB/OR (3 ZONE MTC)
10	L13 20WT/YL (EXPORT)
11	C7 12DB
12	C153 12DB/BR (3 ZONE MTC)
12	D23 20WT/BR (RHD)
13	Z408 18BK/LG (MEMORY EXCEPT EXPORT)
13	Z849 12BK/OR (MEMORY EXPORT)
14	A105 16DB/RD (EXCEPT LOWLINE)
15	A114 16GY/RD
16	F306 18DB/PK
17	C169 22DB/OR (3 ZONE ATC)
17	C154 20LB/OR (3 ZONE MTC)
18	D22 20WT/TN (3 ZONE ATC)
18	C121 20DB/DG (3 ZONE MTC)
19	P160 20TN/LG (EXPORT)
20	-
21	F2 18PK/YL
22	Q102 18OR/LB (EXCEPT EXPORT)
22	L78 20WT/OR (EXPORT)
23	Q103 18OR/LG (EXCEPT EXPORT)
23	P174 20TN/LB (EXPORT)
24	D25 20WT/VT
25	P64 20TN (LHD MEMORY)
25	R79 20LB/WT (RHD)
26	P65 20TN/VT (LHD MEMORY)
26	R81 20LB/WT (RHD)
27	P66 20TN/LG (RHD MEMORY)
28	P67 20TN/OR (RHD MEMORY)
29	F20 20PK/WT
30	F100 18PK/VT
31	F201 20PK/OR (ORC)
32	F504 20GY/PK (3 ZONE ATC)
32	F850 20LB/PK (3 ZONE MTC)
33	P68 20TN/YL (RHD MEMORY)
34	P69 20TN/WT (LHD MEMORY)
35	R21 20LB/WT (SAB)
36	R23 20LB/YL (SAB)
37	R22 20WT/LB (SAB)
38	R24 20YL/LB (SAB)
39	R79 20LB/VT (LHD)
39	D96 20WT/LB (RHD)
40	R80 20VT/LB (LHD)
40	Z109 20BK/GY (RHD)
41	R81 20LB/WT (LHD)
41	A645 20RD/VT (RHD)
42	R82 20WT/LB (LHD)
42	G945 20VT/DG (RHD)
43	A128 18RD/OR (EXCEPT EXPORT/EXCEPT MEMORY)

44	P70 20/LB (RHD MEMORY)
45	P71 20TN/DG (LHD MEMORY)
46	P72 20TN/LG (RHD MEMORY)
47	P73 20TN/YL (LHD MEMORY)
48	P74 20TN/DB (RHD MEMORY)
49	P75 20TN/LG (LHD MEMORY)
49	R80 20VT/LB (RHD)
50	P112 22TN/OR (LUXURY/EXCEPT EXPORT)
50	R82 20WT/LB (RHD)
51	P171 20TN/YL (EXPORT)
51	P114 22TN/WT (LUXURY/EXCEPT EXPORT)
52	P7 20LG/DG (HEATED SEATS)
53	P8 20LG/WT (HEATED SEATS)
54	C154 22LB/OR (3 ZONE ATC)
54	C154 20LB/OR (3 ZONE MTC)
55	X156 20GY/LB (EXPORT)
55	X156 18GY/LB (HIGHLINE AUDIO EXCEPT EXPORT)
56	X154 20GY/YL (EXPORT)
56	X154 18GY/YL (HIGHLINE AUDIO EXCEPT EXPORT)
57	P162 20LG/DG (EXPORT)
58	T751 20YL
59	X15 16GY/DG (EXPORT)
60	A701 18BR/RD
61	X3 22DG/VT
62	X153 20DG/YL (LOWLINE AUDIO)
62	X53 20DG (LOWLINE AUDIO/EXPORT)
63	X154 20GY/YL (LOWLINE AUDIO)
63	X54 20GY (LOWLINE AUDIO/EXPORT)
64	X155 20DG/LB (LOWLINE AUDIO)
64	X55 20DG/BR (LOWLINE AUDIO/EXPORT)
65	X156 20GY/BR (LOWLINE AUDIO)
65	X56 20GY/BR (LOWLINE AUDIO/EXPORT)
66	C54 22LB/YL (3 ZONE HVAC)
67	V37 22VT
68	X51 22DG/DB
69	X52 22GY/DB
70	X57 22DG/OR
71	X58 22GY/OR
72	X153 20DG/YL (EXPORT)
72	X153 18DG/YL (HIGHLINE AUDIO EXCEPT EXPORT)
73	K900 20DB/DG
74	X155 20DG/LB (EXPORT)
74	X155 22DG/LB (HIGHLINE AUDIO EXCEPT EXPORT)

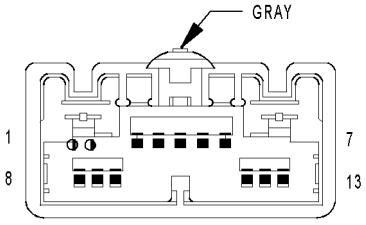

C202

C202 - GRAY (COMPONENT SIDE)

CAV	CIRCUIT
1	Z134 12BK/OR (ATC)
2	C56 20DB/LB (ATC)
2	C34 20DB/LB (MTC)
3	C32 20DB/TN
4	C33 20LB/BR
5	C61 20DB/LG (ATC)
5	C61 20LB/WT (MTC)
6	C35 20LB/OR
7	C7 12DB (ATC)
8	C132 20DB/YL (ATC)
9	C133 20DB/WT (ATC)
10	C161 20LB/WT (ATC)
11	C135 20DB/GY (ATC)
12	C21 20DB/LG
13	C121 20DB/DG

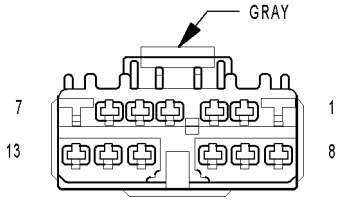

C202

C202 - GRAY (INSTRUMENT PANEL SIDE)

CAV	CIRCUIT
1	Z134 12BK/LG
2	C56 22DB/VT (ATC LHD)
2	C56 22DB/LB (ATC RHD)
2	C34 22DB/LB (MTC)
3	C32 22DB/TN
4	C33 22LB/BR
5	C61 22DB/LG
6	C35 22LB/LG
7	C7 12DB (ATC)
8	C132 22DB/YL (ATC)
9	C133 22DB/WT (ATC)
10	C161 22LB/WT (ATC)
11	C135 22DB/GY (ATC)
12	C21 22LB
13	C121 20DB/DG

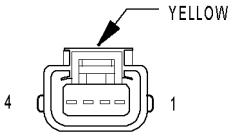

C304
(LHD)

C304 (LHD) - YELLOW (BODY SIDE)

CAV	CIRCUIT
1	R53 20LG/YL
2	R55 20LG/DG
3	-
4	-

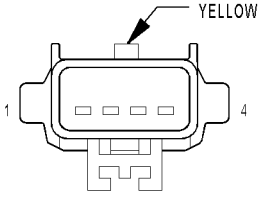

C304
(LHD)

C304 (LHD) - YELLOW (SEAT SIDE)

CAV	CIRCUIT
1	R53 18LG/YL
2	R55 18LG/DG
3	-
4	-

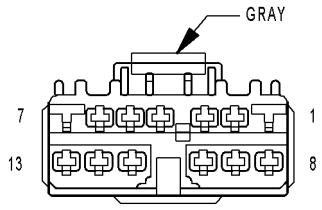

C305

C305 - GRAY (BODY SIDE)

CAV	CIRCUIT
1	Z849 12BK/OR (POWER SEAT)
2	R57 20LG/GY
3	R59 20LG/TN
4	P7 22LG/DG (HEATED SEATS)
5	A210 14OR/RD (HEATED SEATS)
6	F503 20WT/PK (HEATED SEATS)
7	A110 12OR/RD (POWER SEAT)
8	-
9	-
10	-
11	-
12	-
13	-

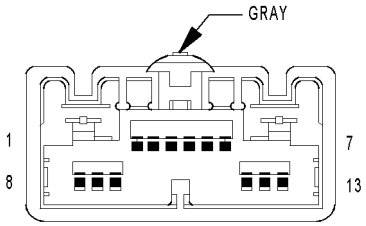

C305

C305 - GRAY (SEAT SIDE)

CAV	CIRCUIT
1	Z849 12BK/OR (POWER SEAT)
2	R57 18LG/GY
3	R59 18LG/TN
4	P7 20LG/DG (HEATED SEAT)
5	A210 14OR/RD (HEATED SEAT)
6	F503 20WT/PK (HEATED SEAT)
7	A110 12OR/RD (POWER SEAT)
8	-
9	-
10	-
11	-
12	-
13	-

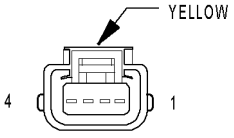

C306
(RHD)

C306 (RHD) - YELLOW (BODY SIDE)

CAV	CIRCUIT
1	R53 20LG/YL
2	R55 20LG/DG
3	-
4	-

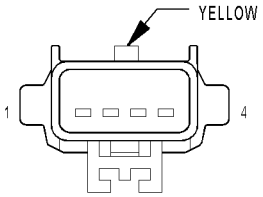

C306
(RHD)

C306 (RHD) - YELLOW (SEAT SIDE)

CAV	CIRCUIT
1	R53 18LG/YL
2	R55 18LG/DG
3	-
4	-

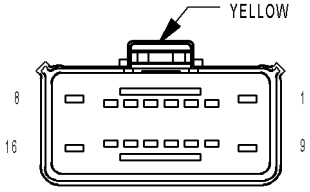

C307

C307 - YELLOW (BODY SIDE)

CAV	CIRCUIT
1	Z848 12BK/OR POWER SEAT)
2	P8 22LG/WT (HEATED SEAT)
3	F201 20PK/OR (EXCEPT EXPORT)
4	R54 20LB/YL
5	R56 20LB/DG
6	R986 20LG/BR (EXCEPT EXPORT)
7	D105 20WT/OR (EXCEPT EXPORT)
8	A210 16OR/RD (POWER SEAT/EXCEPT EXPORT)
8	A210 14OR/RD (POWER SEAT/EXPORT)
9	-
10	D25 20WT/VT (EXCEPT EXPORT)
11	Z104 18BK/LG (EXCEPT EXPORT)
12	-
13	-
14	R86 20LG/LB (EXCEPT EXPORT)
15	F503 20WT/PK (HEATED SEAT)
16	-

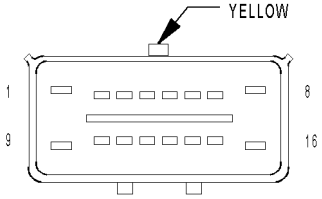

C307

C307 - YELLOW (SEAT SIDE)

CAV	CIRCUIT
1	Z848 14BK/OR (POWER SEAT)
2	P8 20LG/DG (HEATED SEAT)
3	F201 20PK/OR (OCCUPANT SENSING/EXCEPT EXPORT)
4	R54 18LB/YL
5	R56 18LB/DG
6	R986 20LG/BR (OCCUPANT SENSING/EXCEPT EXPORT)
7	D105 20LG/LB (OCCUPANT SENSING/EXCEPT EXPORT)
8	A210 14OR/RD
9	R60 16LB/TN
10	D25 20WT/VT (OCCUPANT SENSING/EXCEPT EXPORT)
11	Z104 20BK/LG (OCCUPANT SENSING/EXCEPT EXPORT)
12	-
13	-
14	R86 20LG/LB (OCCUPANT SENSING/EXCEPT EXPORT)
15	F503 20WT/PK (HEATED SEAT)
16	R58 16LB/GY

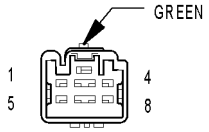

C308 (EXCEPT SIDE AIRBAG)

C308 (EXCEPT SIDE AIRBAG) - GREEN (BODY SIDE)

CAV	CIRCUIT
1	Z77 22BK/GY (MANUAL SLIDING DOOR)
1	Z825 14BK/WT (POWER SLIDING DOOR)
2	P32 20TN/VT
3	G77 22VT/GY
4	P5 20TN/OR
5	G151 22VT/BR (POWER SLIDING DOOR)
6	D25 20WT/VT (MEMORY)
6	D25 20WT/VT (POWER SLIDING DOOR)
7	-
8	A113 12WT/RD (POWER SLIDING DOOR)

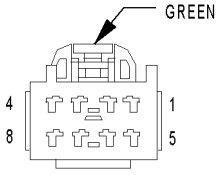

C308 (EXCEPT SIDE AIRBAG)

C308 (EXCEPT SIDE AIRBAG) - GREEN (LEFT DOOR WIRE TRACK ASSEMBLY SIDE)

CAV	CIRCUIT
1	Z76 20BK (MANUAL SLIDING DOOR)
1	Z824 14BK (POWER SLIDING DOOR)
2	P34 20BK/DB
3	G77 20BK/DG
4	P38 20BK/DB
5	G151 20BK/GY (POWER SLIDING DOOR)
6	D25 20BK/VT (MEMORY)
6	D25 20BK/VT (POWER SLIDING DOOR)
7	-
8	A113 14BK/RD (POWER SLIDING DOOR)

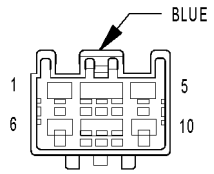

C308
(SIDE AIRBAG)

C308 (SIDE AIRBAG) - BLUE (BODY SIDE)

CAV	CIRCUIT
1	Z77 22BK/GY (MANUAL SLIDING DOOR)
1	Z825 14BK/ WT (POWER SLIDING DOOR)
2	P32 20TN/VT
3	G77 22VT/GY
4	P5 20TN/OR
5	R17 20LG
6	A113 12WT/RD (POWER SLIDING DOOR)
7	G151 22VT/BR (POWER SLIDING DOOR)
8	D25 20WT/VT (MEMORY)
8	D25 20WT/VT (POWER SLIDING DOOR)
9	-
10	R19 20LG/WT

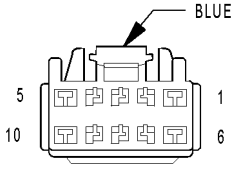

C308
(SIDE AIRBAG)

C308 (SIDE AIRBAG) - BLUE (LEFT DOOR WIRE TRACK ASSEMBLY SIDE)

CAV	CIRCUIT
1	Z76 20BK (MANUAL SLIDING DOOR)
1	Z824 14BK (POWER SLIDING DOOR)
2	P34 20BK/TN
3	G77 20BK/DG
4	P38 20BK/DB
5	R17 18LG
6	A113 14BK/RD (POWER SLIDING DOOR)
7	G151 20BK/GY (POWER SLIDING DOOR)
8	D25 20BK/VT (MEMORY)
8	D25 20BK/VT (POWER SLIDING DOOR)
9	-
10	R19 18LG/WT

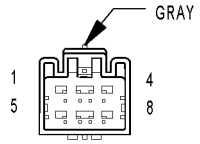

C309
(EXCEPT
SIDE AIRBAG)

C309 (EXCEPT SIDE AIRBAG) - GRAY (BODY SIDE)

CAV	CIRCUIT
1	Z76 22BK/YL (MANUAL SLIDING DOOR)
1	Z824 14BK/WT (POWER SLIDING DOOR)
2	P34 20TN/LB
3	G76 20VT/YL
4	P38 20TN/DB
5	G152 22VT/GY (POWER SLIDING DOOR)
6	D25 20WT/VT (HIGHLINE AUDIO POWER SLIDING DOOR)
6	D25 20WT/VT (POWER SLIDING DOOR)
7	-
8	A113 12WT/RD (POWER SLIDING DOOR)

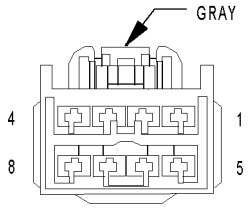

C309 (EXCEPT SIDE AIRBAG)

C309 (EXCEPT SIDE AIRBAG) - GRAY (RIGHT DOOR WIRE TRACK ASSEMBLY SIDE)

CAV	CIRCUIT
1	Z76 20BK (MANUAL SLIDING DOOR)
1	Z824 14BK (POWER SLIDING DOOR)
2	P34 20BK/TN
3	G76 20BK/DG
4	P38 20BK/DB
5	G152 20BK/GY (POWER SLIDING DOOR)
6	D25 20BK/VT (POWER SLIDING DOOR)
7	-
8	A113 14BK/RD (POWER SLIDING DOOR)

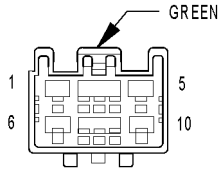

C309 (SIDE AIRBAG)

C309 (SIDE AIRBAG) - GREEN (BODY SIDE)

CAV	CIRCUIT
1	Z76 22BK/YL (MANUAL SLIDING DOOR)
1	Z824 14BK/WT (POWER SLIDING DOOR)
2	P34 20TN/LB
3	G76 20VT/YL
4	P38 20TN/DB
5	R18 20LB
6	A113 12WT/RD (POWER SLIDING DOOR)
7	G152 22VT/GY (POWER SLIDING DOOR)
8	D25 20WT/VT (HIGHLINE AUDIO POWER SLIDING DOOR)
8	D25 20WT/VT (POWER SLIDING DOOR)
10	R20 20WT/LG

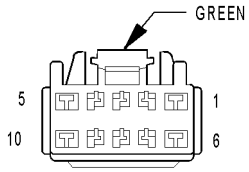

C309 (SIDE AIRBAG)

C309 (SIDE AIRBAG) - GREEN (RIGHT DOOR WIRE TRACK ASSEMBLY SIDE)

CAV	CIRCUIT
1	Z76 20BK (MANUAL SLIDING DOOR)
1	Z824 14BK (POWER SLIDING DOOR)
2	P34 20BK/TN
3	G76 20BK/DG
4	P38 20BK/DB
5	R18 18LB
6	A113 14BK/RD (POWER SLIDING DOOR)
7	G152 20BK/GY (POWER SLIDING DOOR)
8	D25 20BK/VT (POWER SLIDING DOOR)
9	-
10	R20 18WT/LG

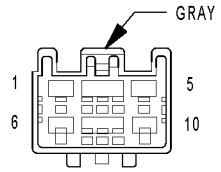

C311 (3 ZONE HVAC/EXCEPT SIDE AIRBAG)

C311 (3 ZONE HVAC/EXCEPT SIDE AIRBAG) - GRAY (BODY SIDE)

CAV	CIRCUIT
1	C153 12DB/BR (MTC)
2	F504 20GY/PK (ATC)
2	F850 20LB/PK (MTC)
3	D22 20WT/TN (ATC)
3	C121 20DB/DG (MTC)
4	D17 20WT/DG (ATC)
4	C22 20LB/WT (MTC)
5	C151 18LB/DG (MTC)
6	-
7	C152 16LB/LG (MTC)
8	E10 20OR/DG
9	Z27 18BK/DG (ATC)
9	Z409 20BK/OR (MTC)
10	C50 12DB/OR (MTC)

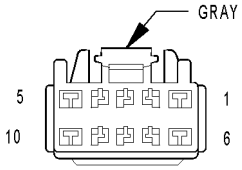

C311 (3 ZONE HVAC/EXCEPT SIDE AIRBAG)

C311 (3 ZONE HVAC/EXCEPT SIDE AIRBAG) - GRAY (REAR A/C JUMPER SIDE)

CAV	CIRCUIT
1	C153 12 DB/BR (MTC)
2	F504 20GY/PK (ATC)
2	F850 20LB/PK (MTC)
3	D22 22WT/TN (ATC)
3	C121 20DB/DG (MTC)
4	D17 22WT/DG (ATC)
4	C22 20LB/DB (MTC)
5	C151 18LB/DG (MTC)
6	-
7	C152 16LB/LG (MTC)
8	E10 20OR/DG
9	Z27 18BK/DG (ATC)
9	Z409 20BK/OR (MTC)
10	C50 12DB/OR (MTC)

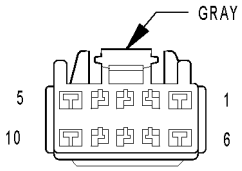

C311 (3 ZONE HVAC/SIDE AIRBAG)

C311 (3 ZONE HVAC/SIDE AIRBAG) - GRAY (BODY SIDE)

CAV	CIRCUIT
1	C153 12DB/BR (MTC)
2	F504 20GY/PK (ATC)
2	F850 20LB/PK (MTC)
3	D22 20WT/TN (ATC)
3	C121 20DB/DG (MTC)
4	D17 20WT/DG (ATC)
4	C22 20LB/WT (MTC)
5	C151 18LB/DG (MTC)
6	-
7	C152 16LB/LG (MTC)
8	E10 20OR/DG
9	Z27 18BK/DG (ATC)
9	Z409 20BK/OR (MTC)
10	C50 12DB/OR (MTC)

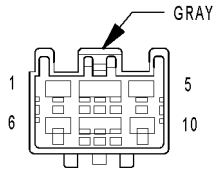

C311 (3 ZONE HVAC/SIDE AIRBAG)

C311 (3 ZONE HVAC/SIDE AIRBAG) - GRAY (REAR A/C JUMPER SIDE)

CAV	CIRCUIT
1	C153 12DB/BR (MTC)
2	F504 20GY/PK (ATC)
2	F850 20LB/PK (MTC)
3	D22 22WT/TN (ATC)
3	C121 20DB/DG (MTC)
4	D17 22WT/DG (ATC)
4	C22 20LB/DB (MTC)
5	C151 18LB/DG (MTC)
6	-
7	C152 16LB/LG (MTC)
8	E10 20OR/DG
9	Z27 18BK/DG (ATC)
9	Z409 20BK/OR (MTC)
10	C50 12DB/OR (MTC)

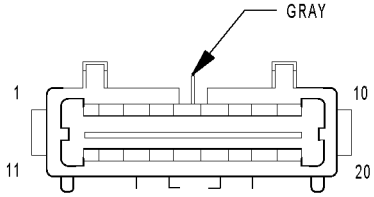

C312 (EXCEPT SIDE AIRBAG)

C312 (EXCEPT SIDE AIRBAG) - GRAY (BODY SIDE)

CAV	CIRCUIT
1	M27 20YL/LB
1	M27 20YL/LB (FRONT CONSOLE)
2	M22 20YL/OR
3	G23 22VT/DB (POWER SLIDING DOOR)
4	G25 22VT/TN (HIGHLINE)
5	D25 20WT/VT (DRIVER SIDE POWER SLIDING DOOR/EXCEPT EXPORT)
5	D25 20WT/VT (HIGHLINE)
6	A114 18GY/RD (HIGHLINE)
7	F503 20WT/PK (HIGHLINE)
8	X777 20DG/GY (REAR PARK ASSIST)
9	P112 22TN/OR (LUXURY)
10	P114 22TN/WT (LUXURY)
11	M21 20YL/BR
12	Z837 20BK/WT
12	Z113 20BK/WT (HIGHLINE)
13	Z13 20BK/WT
14	Z113 20BK/WT (HIGHLINE)
15	Q3 20OR/TN (SUNROOF)
16	Q4 20OR/YL (SUNROOF)
17	Q5 20OR/LB (SUNROOF)
18	Z171 20BK/GY (REAR PARK ASSIST)
19	D777 20WT/GY (REAR PARK ASSIST)
20	-

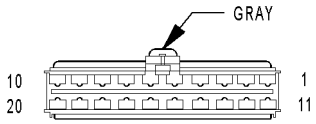

C312
(EXCEPT SIDE AIRBAG)

C312 (EXCEPT SIDE AIRBAG) - GRAY (HEADLINER SIDE)

CAV	CIRCUIT
1	M27 20YL/LB
1	M27 20YL/LB (EXCEPT BASE)
2	M22 20YL/OR
3	G23 22VT/DB
3	G23 20VT/DB (EXCEPT BASE)
4	G25 22VT/TN
4	G25 20VT/TN (EXCEPT BASE)
5	D25 20WT/VT (EXCEPT BASE)
6	A114 20GY/RD (EXCEPT BASE)
7	F503 20BK/PK
7	F503 20WT/PK (EXCEPT BASE)
8	X777 20DG/GY (REAR PARK ASSIST)
9	P112 22BK/OR (LUXURY)
10	P114 22BK/LB (LUXURY)
11	M21 20YL/BR
12	Z837 20BK/OR
12	Z327 20BK/OR
12	Z137 20BK/LB (EXCEPT BASE)
13	Z13 20BK/WT (EXCEPT BASE)
14	Z113 20BK/DB (EXCEPT BASE)
14	Z113 20BK/WT (EXPORT)
14	Z113 20BK (LUXURY)
15	Q3 20OR/TN
16	Q4 20OR/YL
17	Q5 20OR/LB
18	Z171 20BK/GY (REAR PARK ASSIST)
19	D777 20WT/GY (REAR PARK ASSIST)
20	-

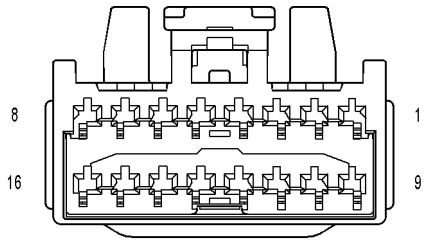

C312
(SIDE AIRBAG)

C312 (SIDE AIRBAG) - (BODY SIDE)

CAV	CIRCUIT
1	M27 20YL/LB
1	M27 20YL/LB (FRONT CONSOLE)
2	M22 20YL/OR
3	G23 22VT/DB (POWER SLIDING DOOR)
4	G25 22VT/TN (HIGHLINE)
5	D25 20WT/VT (DRIVER SIDE POWER SLIDING DOOR/EXCEPT EXPORT)
5	D25 20WT/VT (HIGHLINE)
6	A114 18GY/RD (HIGHLINE)
7	F503 20WT/PK (HIGHLINE)
8	X777 20DG/GY (REAR PARK ASSIST)
9	P112 22TN/OR (LUXURY)
10	P114 22TN/WT (LUXURY)
11	M21 20YL/BR
12	Z837 20BK/WT
12	Z113 20BK/WT (EXCEPT BASE)
13	Z13 20BK/WT
14	Z113 20BK/WT (EXCEPT BASE)
15	Z171 20BK/GY (REAR PARK ASSIST)
16	D777 20WT/GY (REAR PARK ASSIST)

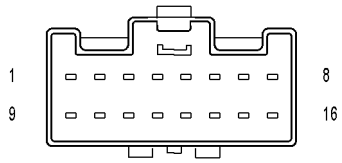

C312
(SIDE AIRBAG)

C312 (SIDE AIRBAG) - (HEADLINER SIDE)

CAV	CIRCUIT
1	M27 20YL/LB
1	M27 20YL/LB (EXCEPT BASE)
2	M22 20YL/OR
3	G23 20VT/DB (EXCEPT BASE)
3	G23 22VT/DB (PREMIUM/ LUXURY)
4	G25 20VT/TN (EXCEPT BASE)
4	G25 22VT/TN (PREMIUM/ LUXURY)
5	D25 20WT/VT (EXCEPT BASE)
6	A114 20GY/RD (EXCEPT BASE)
7	F503 20WT/PK (EXCEPT BASE)
7	F503 20BK/PK (PREMIUM/ LUXURY)
8	X777 20DG/GY (REAR PARK ASSIST)
9	P112 22BK/OR (LUXURY)
10	P114 22BK/LB (LUXURY)
11	M21 20YL/BR
12	Z837 20BK/OR (EXCEPT BASE/EXCEPT EXPORT)
12	Z327 20BK/OR (EXCEPT BASE/EXCEPT EXPORT)
12	Z137 20BK/LB (EXPORT/ BASE)
13	Z13 20BK/WT (EXCEPT BASE)
14	Z113 20BK/DB (EXCEPT BASE)
14	Z113 20BK/WT (EXPORT)
14	Z113 20BK (LUXURY)
15	Z171 20BK/GY (REAR PARK ASSIST)
16	D777 20WT/GY (REAR PARK ASSIST)

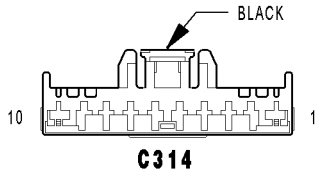

C314 - BLACK (BODY SIDE)

CAV	CIRCUIT
1	C15 12DB/WT (EXCEPT POWER LIFTGATE/EXCEPT EXPORT)
1	G32 20VT/LB (POWER LIFTGATE)
2	L77 18WT/BR
3	L50 18WT/TN
4	P30 20TN/DG
5	P31 20TN/YL (POWER RELEASE)
6	G78 20VT/OR (EXCEPT POWER LIFTGATE)
6	Q60 22OR/YL (POWER LIFTGATE)
7	M11 20YL/VT (EXCEPT POWER LIFTGATE/EXCEPT EXPORT)
7	Q84 18TN/GY (POWER LIFTGATE)
8	W13 18BR/LG (EXCEPT POWER LIFTGATE)
8	Z87 20BK/LG (POWER LIFTGATE)
9	F302 18GY/PK (EXCEPT POWER LIFTGATE/EXCEPT EXPORT)
9	Q83 18OR/GY (POWER LIFTGATE)
10	Z800 12BK

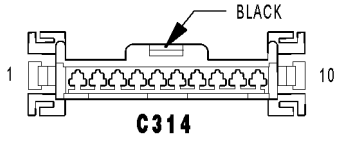

C314 - BLACK (LIFTGATE SIDE)

CAV	CIRCUIT
1	C15 12DB/WT (EXCEPT POWER LIFTGATE)
1	G32 20VT/LB (POWER LIFTGATE)
2	L77 18WT/BR
3	L50 18WT/TN
4	P30 20TN/DG
5	P31 20TN/YL (POWER RELEASE)
6	G78 20VT/OR (EXCEPT POWER LIFTGATE)
6	Q60 20OR/YL (POWER LIFTGATE)
7	M11 20YL/VT (EXCEPT POWER LIFTGATE)
7	Q84 18TN/GY (POWER LIFTGATE)
8	W13 18BR/LG (EXCEPT POWER LIFTGATE)
8	Z87 20BK/LG (POWER LIFTGATE)
9	F302 18GY/PK (EXCEPT POWER LIFTGATE)
9	Q83 18OR/GY (POWER LIFTGATE)
10	Z800 12BK

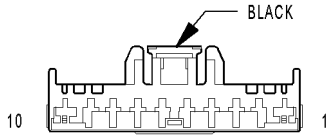

C315
(POWER LIFTGATE)

C315 (POWER LIFTGATE) - BLACK (BODY SIDE)

CAV	CIRCUIT
1	C15 12DB/WT
2	Q76 22OR/LB
3	G78 20VT/OR
4	M11 20YL/VT
5	-
6	Q85 18TN/WT
7	Q94 22TN/LG
8	W13 18BR/LG
9	F302 18GY/PK
10	-

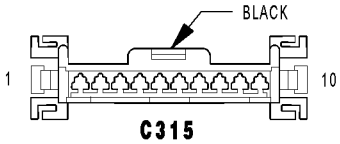

C315
(POWER LIFTGATE)

C315 (POWER LIFTGATE) - BLACK (LIFTGATE SIDE)

CAV	CIRCUIT
1	C15 12DB/WT
2	Q76 20OR/LB
3	G78 20VT/OR
4	M11 20YL/VT
5	-
6	Q85 18TN/WT
7	Q94 20TN/LG
8	W13 18BR/LG
9	F302 18GY/PK
10	-

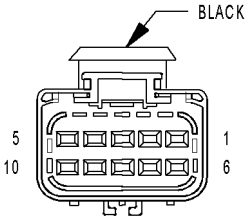

C316
(POWER SLIDING DOOR)

C316 (POWER SLIDING DOOR) - BLACK (LEFT DOOR WIRE TRACK ASSEMBLY SIDE)

CAV	CIRCUIT
1	P5 20BK/DB
2	P32 20BK/TN
3	G77 20BK/DG
4	Z825 14BK
5	-
6	-
7	G151 20BK/GY
8	D25 20WT/VT
9	-
10	A113 14BK/RD

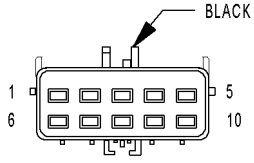

C316
(POWER SLIDING DOOR)

C316 (POWER SLIDING DOOR) - BLACK (LEFT SLIDING DOOR SIDE)

CAV	CIRCUIT
1	P5 20TN/OR
2	P32 20TN/VT
3	G77 20TN/OR
4	Z825 14BK/WT
5	-
6	-
7	G151 20VT/BR
8	D25 20WT/VT
9	-
10	A113 14WT/RD

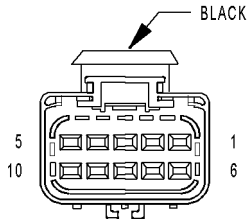

C317
(POWER SLIDING DOOR)

C317 (POWER SLIDING DOOR) - BLACK (RIGHT DOOR WIRE TRACK ASSEMBLY SIDE)

CAV	CIRCUIT
1	P38 20BK/DB
2	P34 20BK/TN
3	G76 20BK/DG
4	Z824 14BK
5	-
6	-
7	G152 20BK/GY
8	D25 20WT/VT
9	-
10	A113 14BK/RD

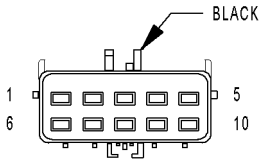

C317
(POWER SLIDING DOOR)

C317 (POWER SLIDING DOOR) - BLACK (RIGHT SLIDING DOOR SIDE)

CAV	CIRCUIT
1	P38 20TN/DB
2	P34 20TN/LB
3	G76 20TN/OR
4	Z824 14BK/WT
5	-
6	-
7	G152 20VT/GY
8	D25 20WT/VT
9	-
10	A113 14WT/RD

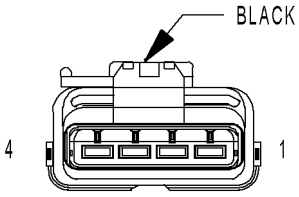

C324
(MANUAL SLIDING DOOR)

C324 (MANUAL SLIDING DOOR) - BLACK (LEFT DOOR WIRE TRACK ASSEMBLY SIDE)

CAV	CIRCUIT
1	P38 20BK/DB
2	P34 20BK/TN
3	G76 20BK/DG
4	Z76 20BK

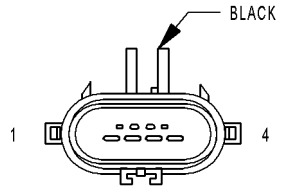

C324
(MANUAL SLIDING DOOR)

C324 (MANUAL SLIDING DOOR) - BLACK (LEFT MANUAL SLIDING DOOR SIDE)

CAV	CIRCUIT
1	P5 20BK/DB
2	P32 20BK/TN
3	G77 20BK/DG
4	Z77 20BK

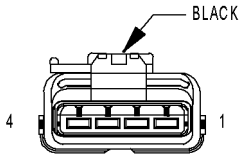

C325
(MANUAL SLIDING DOOR)

C325 (MANUAL SLIDING DOOR) - BLACK (RIGHT DOOR WIRE TRACK ASSEMBLY SIDE)

CAV	CIRCUIT
1	P38 20BK/DB
2	P34 20BK/TN
3	G76 20BK/DG
4	Z76 20BK

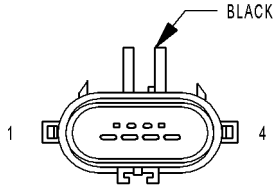

C325
(MANUAL SLIDING DOOR)

C325 (MANUAL SLIDING DOOR) - BLACK (RIGHT MANUAL SLIDING DOOR SIDE)

CAV	CIRCUIT
1	P38 20BK/DB
2	P34 20BK/TN
3	G76 20BK/DG
4	Z76 20BK

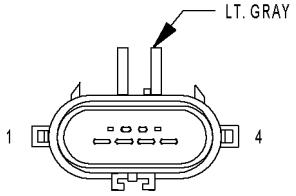

C330
(DIESEL)

C330 (DIESEL) - LT. GRAY (CABIN HEATER JUMPER SIDE)

CAV	CIRCUIT
1	A119 16RD/OR
2	C41 20LB/DG
3	D21 20WT
4	Z149 16BK/DB

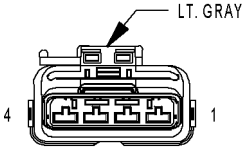

C330
(DIESEL)

C330 (DIESEL) - LT. GRAY (POWERTRAIN SIDE)

CAV	CIRCUIT
1	A119 16RD/OR
2	C41 20LB/DG
3	D21 20WT/DG
4	Z149 16BK/DB

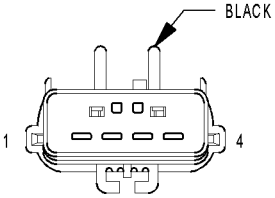

C331
(DIESEL)

C331 (DIESEL) - BLACK (CABIN HEATER COMPONENT SIDE)

CAV	CIRCUIT
1	A119 14RD/OR
2	C41 20DB/OR
3	D21 20WT/DB
4	Z149 14BK/DB

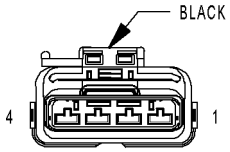

C331 (DIESEL)

C331 (DIESEL) - BLACK (CABIN HEATER JUMPER SIDE)

CAV	CIRCUIT
1	A119 16RD/OR
2	C41 20LB/DG
3	D21 20WT
4	Z149 16BK/DB

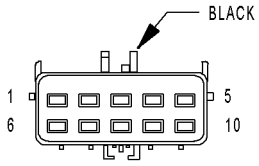

C332 (3 ZONE ATC)

C332 (3 ZONE ATC) - BLACK (COMPONENT SIDE)

CAV	CIRCUIT
1	C53 18LB
2	C169 18LB/TN
3	C51 12DB/BR
4	C59 18DB/LB
5	-
6	Z135 12BK/LB
7	C54 18LB/YL
8	C154 18LB/GY
9	-
10	-

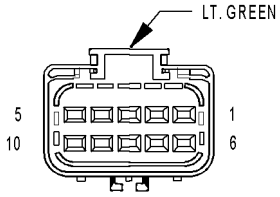

C332 (3 ZONE ATC)

C332 (3 ZONE ATC) - LT. GREEN (BODY SIDE)

CAV	CIRCUIT
1	C53 20LB
2	C169 20DB/OR
3	C51 12LB/BR
4	C59 20DB/LB
5	-
6	Z135 12BK/LB
7	C54 20LB/YL
8	C154 20LB/OR
9	-
10	-

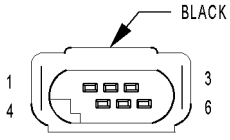

CABIN HEATER ASSIST C1 (DIESEL)

CABIN HEATER ASSIST C1 (DIESEL) - BLACK 6 WAY

CAV	CIRCUIT	FUNCTION
1	-	-
2	D21 20WT/DB	SCI TRANSMIT
3	-	-
4	-	-
5	C41 20DB/OR	CABIN HEATER ASSIST CONTROL
6	18RD	DOSING PUMP CONTROL

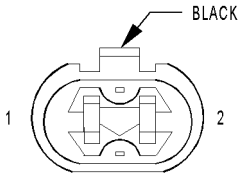

CABIN HEATER ASSIST C2 (DIESEL)

CABIN HEATER ASSIST C2 (DIESEL) - BLACK 2 WAY

CAV	CIRCUIT	FUNCTION
1	A119 14RD/OR	FUSED B(+)
2	Z149 14BK/DB	GROUND

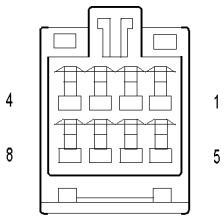

CD CHANGER

CD CHANGER - 8 WAY

CAV	CIRCUIT	FUNCTION
1	X40 22GY/WT (EXCEPT EXPORT)	AUDIO OUT RIGHT
1	X40 20GY/WT (EXPORT)	AUDIO OUT RIGHT
2	E14 22OR/TN (EXCEPT EXPORT)	PANEL LAMPS DRIVER
2	E14 18OR/TN (EXPORT)	PANEL LAMPS DRIVER
3	D25 20WT/VT (EXCEPT EXPORT)	PCI BUS
3	D25 20VT/YL (EXPORT)	PCI BUS
4	X112 20DG/GY (EXCEPT EXPORT)	IGNITION SWITCH SIGNAL
4	X112 20RD (EXPORT)	IGNITION SWITCH SIGNAL
5	X41 22DG/WT (EXCEPT EXPORT)	AUDIO OUT LEFT
5	X41 20DG/WT (EXPORT)	AUDIO OUT LEFT
6	X140 22GY/OR (EXCEPT EXPORT)	COMMON AUDIO
6	Z140 18BK/OR (EXPORT)	GROUND
7	Z141 20BK/TN (EXCEPT EXPORT)	GROUND
7	Z141 18BK/TN (EXPORT)	GROUND
8	X160 20GY/YL	FUSED B(+)

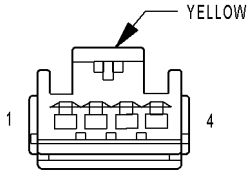

CLOCKSPRING C2

CLOCKSPRING C2 - YELLOW 4 WAY

CAV	CIRCUIT	FUNCTION
1	R61 20LG/VT (EXCEPT EXPORT)	DRIVER SQUIB 2 LINE 2
1	R61 20LB/VT (EXPORT)	DRIVER SQUIB 2 LINE 2
2	R63 20LG/WT	DRIVER SQUIB 2 LINE 1
3	R43 20LG/BR	DRIVER SQUIB 1 LINE 2
4	R45 20LG/OR	DRIVER SQUIB 1 LINE 1

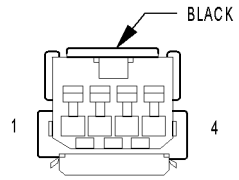

CLOCKSPRING C3

CLOCKSPRING C3 - BLACK 4 WAY

CAV	CIRCUIT	FUNCTION
1	-	-
2	Z23 20BK/VT	LEFT SPEED CONTROL SWITCH GROUND
2	Z23 20BK/VT	RIGHT SPEED CONTROL SWITCH GROUND
3	V37 20VT (DIESEL)	SPEED CONTROL SWITCH SIGNAL
3	V37 20VT (DIESEL)	SPEED CONTROL SWITCH SIGNAL
3	V37 20VT (GAS)	S/C SWITCH NO. 1 SIGNAL
3	V37 20VT (GAS)	S/C SWITCH NO. 1 SIGNAL
4	X3 20DG/VT	HORN SWITCH SENSE

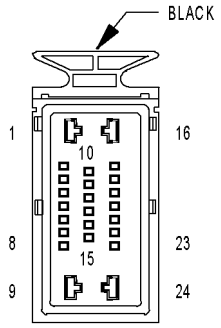

CONTROLLER ANTILOCK BRAKE

CONTROLLER ANTILOCK BRAKE - BLACK 24 WAY

CAV	CIRCUIT	FUNCTION
1	Z107 12BK/DG	GROUND
2	B1 18DG/OR	RIGHT REAR WHEEL SPEED SENSOR SIGNAL
3	B2 18DG/LB	RIGHT REAR WHEEL SPEED SENSOR 12 VOLT SUPPLY
4	-	-
5	D25 18WT/VT	PCI BUS
6	B6 18DG/WT	RIGHT FRONT WHEEL SPEED SENSOR SIGNAL
7	B7 18DG/VT	RIGHT FRONT WHEEL SPEED SENSOR 12 VOLT SUPPLY
8	-	-
9	A111 12DG/RD	FUSED B(+)
10	F500 18DG/PK	FUSED IGNITION SWITCH OUTPUT (RUN)
11	-	-
12	-	-
13	-	-
14	-	-
15	-	-
16	Z127 12BK/DG	GROUND
17	-	-
18	L50 18WT/TN (DIESEL)	PRIMARY BRAKE SWITCH SIGNAL
18	L50 18WT/TN (GAS)	BRAKE LAMP SWITCH OUTPUT
19	B3 18DG/YL	LEFT REAR WHEEL SPEED SENSOR SIGNAL
20	B4 18DG/GY	LEFT REAR WHEEL SPEED SENSOR 12 VOLT SUPPLY
21	-	-
22	B8 18DG/TN	LEFT FRONT WHEEL SPEED SENSOR SIGNAL
23	B9 18DG/WT (3.3L/3.8L)	LEFT FRONT WHEEL SPEED SENSOR 12 VOLT SUPPLY
23	B9 18DG/LG (EXCEPT 3.3L/3.8L)	LEFT FRONT WHEEL SPEED SENSOR 12 VOLT SUPPLY
24	A107 12TN/RD	FUSED B(+)

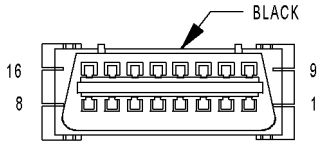

DATA LINK CONNECTOR

DATA LINK CONNECTOR - BLACK 16 WAY

CAV	CIRCUIT	FUNCTION
1	-	-
2	D25 20WT/VT	PCI BUS
3	-	-
4	Z11 20BK/LG	GROUND
5	Z111 20BK/WT	GROUND
6	-	-
7	D21 20WT/DG (DIESEL)	SCI TRANSMIT (ECM)
7	D21 20WT/DG (GAS)	SCI TRANSMIT (PCM)
8	-	-
9	D123 20WT/BR	FLASH PROGRAM ENABLE
10	-	-
11	-	-
12	D20 20WT/LG (GAS)	SCI RECEIVE (PCM)
13	-	-
14	-	-
15	D15 20DG/YL (EATX)	SCI TRANSMIT (TCM)
16	A105 20DB/RD	FUSED B(+)

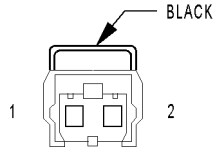

DOSING PUMP (DIESEL)

DOSING PUMP (DIESEL) - BLACK 2 WAY

CAV	CIRCUIT	FUNCTION
1	18RD	DOSING PUMP CONTROL
2	Z149 18BK/DB	GROUND

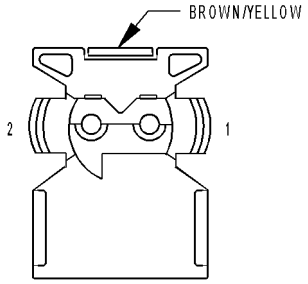

DRIVER AIRBAG SQUIB 1

DRIVER AIRBAG SQUIB 1 - BROWN/YELLOW 2 WAY

CAV	CIRCUIT	FUNCTION
1	R43 20OR/LB	DRIVER SQUIB 1 LINE 2
2	R45 20TN/LB	DRIVER SQUIB 1 LINE 1

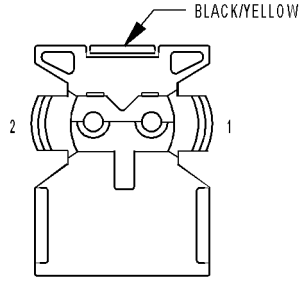

DRIVER AIRBAG SQUIB 2

DRIVER AIRBAG SQUIB 2 - BLACK/YELLOW 2 WAY

CAV	CIRCUIT	FUNCTION
1	R61 20LG/VT	DRIVER SQUIB 2 LINE 2
2	R63 20OR/LB	DRIVER SQUIB 2 LINE 1

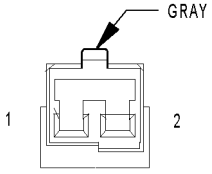

DRIVER BLEND DOOR ACTUATOR

DRIVER BLEND DOOR ACTUATOR - GRAY 2 WAY

CAV	CIRCUIT	FUNCTION
1	C61 20DB/LG (ATC)	DRIVER BLEND DOOR DRIVER (A)
1	C61 20LB/WT (LHD)	DRIVER BLEND DOOR DRIVER (A)
1	C34 20DB/LB (RHD)	COMMON DOOR DRIVER (B)
2	C161 20LB/WT (ATC)	DRIVER BLEND DOOR DRIVER (B)
2	C34 20DB/LB (LHD)	COMMON DOOR DRIVER (B)
2	C61 20LB/WT (RHD)	DRIVER BLEND DOOR DRIVER (A)

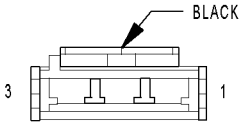

DRIVER DOOR LOCK SWITCH

DRIVER DOOR LOCK SWITCH - BLACK 3 WAY

CAV	CIRCUIT	FUNCTION
1	-	-
2	G161 20VT/DG (LHD)	LEFT DOOR LOCK SWITCH MUX
2	G160 20VT/LG (RHD)	RIGHT DOOR LOCK SWITCH MUX
3	Z461 20BK/DG (LHD)	GROUND
3	Z460 20BK/LG (RHD)	GROUND

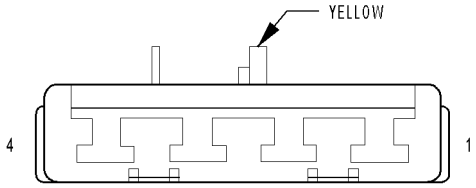

DRIVER KNEE BLOCKER AIRBAG SQUIB (LHD)

DRIVER KNEE BLOCKER AIRBAG SQUIB - YELLOW 4 WAY

CAV	CIRCUIT	FUNCTION
1	-	
2	-	
3	R9 20LB/YL	DRIVER KNEE BLOCKER SQUIB LINE 1
4	R11 20LB/DB	DRIVER KNEE BLOCKER SQUIB LINE 2

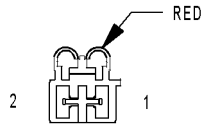

DRIVER POWER SEAT FRONT RISER MOTOR

DRIVER POWER SEAT FRONT RISER MOTOR - RED 2 WAY

CAV	CIRCUIT	FUNCTION
1	P19 14LG/LB (EXCEPT MEMORY)	DRIVER FRONT UP SWITCH SENSE
1	P121 14LG/DB (MEMORY EXCEPT EXPORT)	SEAT FRONT DOWN DRIVER
1	P119 14LG/DG (MEMORY EXPORT)	SEAT FRONT UP DRIVER
2	P21 14LG/TN (EXCEPT MEMORY)	DRIVER FRONT DOWN SWITCH SENSE
2	P121 14LG/DB (MEMORY EXCEPT EXPORT)	SEAT FRONT DOWN DRIVER
2	P119 14LG/DG (MEMORY EXPORT)	SEAT FRONT UP DRIVER

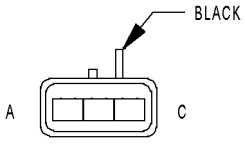

DRIVER POWER SEAT FRONT RISER POSITION SENSOR

DRIVER POWER SEAT FRONT RISER POSITION SENSOR - BLACK 3 WAY

CAV	CIRCUIT	FUNCTION
A	P28 20LG/BR	SEAT POSITION SENSOR GROUND
B	P26 20LG	FRONT RISER POSITION SIGNAL
C	P29 20LG/WT	SEAT SENSOR 5 VOLT SUPPLY

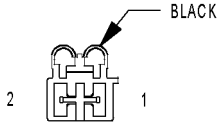

DRIVER POWER SEAT HORIZONTAL MOTOR

DRIVER POWER SEAT HORIZONTAL MOTOR - BLACK 2 WAY

CAV	CIRCUIT	FUNCTION
1	P17 14LG/DG (EXCEPT MEMORY)	DRIVER SEAT HORIZONTAL REARWARD SWITCH SENSE
1	P117 14LG/LB (MEMORY EXCEPT EXPORT)	SEAT HORIZONTAL REARWARD DRIVER
1	P115 14LG (MEMORY EXPORT)	SEAT HORIZONTAL FORWARD DRIVER
2	P15 14LG/WT (EXCEPT MEMORY)	DRIVER SEAT HORIZONTAL FORWARD SWITCH SENSE
2	P115 14LG/OR (MEMORY EXCEPT EXPORT)	SEAT HORIZONTAL FORWARD DRIVER
2	P117 14LG/LB (MEMORY EXPORT)	SEAT HORIZONTAL REARWARD DRIVER

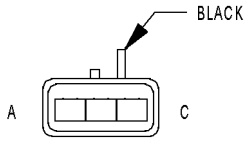

DRIVER POWER SEAT HORIZONTAL POSITION SENSOR

DRIVER POWER SEAT HORIZONTAL POSITION SENSOR - BLACK 3 WAY

CAV	CIRCUIT	FUNCTION
A	P29 20LG/WT	SEAT SENSOR 5 VOLT SUPPLY
B	P25 20LG/VT	SEAT HORIZONTAL POSITION SIGNAL
C	P28 20LG/BR	SEAT POSITION SENSOR GROUND

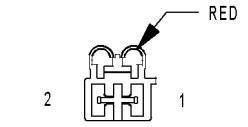

DRIVER POWER SEAT REAR RISER MOTOR

DRIVER POWER SEAT REAR RISER MOTOR - RED 2 WAY

CAV	CIRCUIT	FUNCTION
1	P11 14LG/YL (EXCEPT MEMORY)	DRIVER SEAT REAR UP SWITCH SENSE
1	P111 14LG/YL (MEMORY EXCEPT EXPORT)	SEAT REAR UP DRIVER
1	P113 14LG/WT (MEMORY EXPORT)	SEAT REAR DOWN DRIVER
2	P13 14LG/OR (EXCEPT MEMORY)	DRIVER SEAT REAR DOWN SWITCH SENSE
2	P113 14LG/VT (MEMORY EXCEPT EXPORT)	SEAT REAR DOWN DRIVER
2	P111 14LG/YL (MEMORY EXPORT)	SEAT REAR UP DRIVER

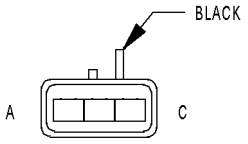

DRIVER POWER SEAT REAR RISER POSITION SENSOR

DRIVER POWER SEAT REAR RISER POSITION SENSOR - BLACK 3 WAY

CAV	CIRCUIT	FUNCTION
A	P28 20LG/BR	SEAT POSITION SENSOR GROUND
B	P27 20LG/LB	REAR RISER POSITION SIGNAL
C	P29 20LG/WT	SEAT SENSOR 5 VOLT SUPPLY

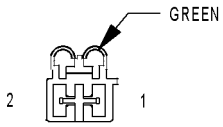

DRIVER POWER SEAT RECLINER MOTOR

DRIVER POWER SEAT RECLINER MOTOR - GREEN 2 WAY

CAV	CIRCUIT	FUNCTION
1	P41 14LG/GY (EXCEPT MEMORY)	DRIVER SEAT RECLINER DOWN SWITCH SENSE
1	P141 14LG/BR (MEMORY EXCEPT EXPORT)	SEAT RECLINER DOWN DRIVER
1	P143 14LG/GY (MEMORY EXPORT)	SEAT RECLINER UP DRIVER
2	P43 14LG/VT (EXCEPT MEMORY)	DRIVER SEAT RECLINER UP SWITCH SENSE
2	P143 14LG/GY (MEMORY EXCEPT EXPORT)	SEAT RECLINER UP DRIVER
2	P141 14LG/BR (MEMORY EXPORT)	SEAT RECLINER DOWN DRIVER

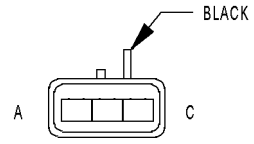

DRIVER POWER SEAT RECLINER POSITION SENSOR

DRIVER POWER SEAT RECLINER POSITION SENSOR - BLACK 3 WAY

CAV	CIRCUIT	FUNCTION
A	P29 20LG/WT	SEAT SENSOR 5 VOLT SUPPLY
B	P47 20LG/LB	RECLINER POSITION SIGNAL
C	P28 20LG/BR	SEAT POSITION SENSOR GROUND

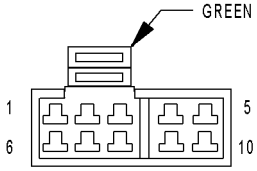

DRIVER POWER SEAT SWITCH

DRIVER POWER SEAT SWITCH - GREEN 10 WAY

CAV	CIRCUIT	FUNCTION
1	Z849 14BK/OR (EXCEPT MEMORY)	GROUND
1	Z849 20BK/OR (MEMORY)	GROUND
2	P43 14LG/VT (EXCEPT MEMORY)	DRIVER SEAT RECLINER UP SWITCH SENSE
2	P43 14LG/VT (MEMORY)	DRIVER SEAT RECLINER UP SWITCH SENSE
3	P17 14LG/DG (EXCEPT MEMORY)	DRIVER SEAT HORIZONTAL REARWARD SWITCH SENSE
3	P17 20LG/DG (MEMORY)	DRIVER SEAT HORIZONTAL REARWARD SWITCH SENSE
4	P41 14LG/GY (EXCEPT MEMORY)	DRIVER SEAT RECLINER DOWN SWITCH SENSE
4	P41 14LG/GY (MEMORY)	DRIVER SEAT RECLINER DOWN SWITCH SENSE
5	A210 14OR/RD (EXCEPT MEMORY)	FUSED SEAT SWITCH DRIVER
5	P9 20LG/OR (MEMORY)	SEAT SWITCH B(+) SUPPLY
6	P15 14LG/WT (EXCEPT MEMORY)	DRIVER SEAT HORIZONTAL FORWARD SWITCH SENSE
6	P15 20LG/WT (MEMORY)	DRIVER SEAT HORIZONTAL FORWARD SWITCH SENSE
7	P19 14LG/LB (EXCEPT MEMORY)	DRIVER SEAT FRONT UP SWITCH SENSE
7	P19 20LG/LB (MEMORY)	DRIVER SEAT FRONT UP SWITCH SENSE
8	P11 14LG/YL (EXCEPT MEMORY)	DRIVER SEAT REAR UP SWITCH SENSE
8	P11 20LG/YL (MEMORY)	DRIVER SEAT REAR UP SWITCH SENSE
9	P13 14LG/OR (EXCEPT MEMORY)	DRIVER SEAT REAR DOWN SWITCH SENSE
9	P13 20LG/OR (MEMORY)	DRIVER SEAT REAR DOWN SWITCH SENSE
10	P21 14LG/TN (EXCEPT MEMORY)	DRIVER SEAT FRONT DOWN SWITCH SENSE
10	P21 20LG/TN (MEMORY)	DRIVER SEAT FRONT DOWN SWITCH SENSE

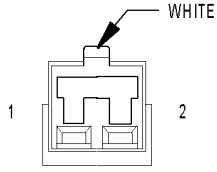

DRIVER SEAT BELT SWITCH

DRIVER SEAT BELT SWITCH - WHITE 2 WAY

CAV	CIRCUIT	FUNCTION
1	R57 18LG/GY	DRIVER SEAT BELT SWITCH SENSE
2	R59 18LG/TN	DRIVER SEAT BELT SWITCH GROUND

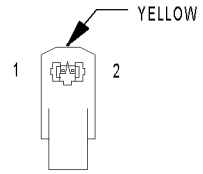

DRIVER SEAT BELT TENSIONER

DRIVER SEAT BELT TENSIONER - YELLOW 2 WAY

CAV	CIRCUIT	FUNCTION
1	R53 18LG/YL	DRIVER SEAT BELT TENSIONER LINE 2
2	R55 18LG/DG	DRIVER SEAT BELT TENSIONER LINE 1

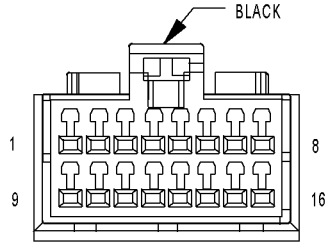

DVD/CD CHANGER C1

DVD/CD CHANGER C1 - BLACK 16 WAY

CAV	CIRCUIT	FUNCTION
1	-	-
2	-	-
3	E14 22OR/TN	PANEL LAMPS DRIVER
4	-	-
5	-	-
6	-	-
7	A114 20GY/RD	FUSED B(+) (I.O.D.)
8	X40 22GY/WT	AUDIO OUT RIGHT
9	Z530 20GY/BK	GROUND
10	-	-
11	X112 20DG/GY	IGNITION SWITCH SIGNAL
12	D25 20WT/VT	PCI BUS
13	-	-
14	-	-
15	X140 22GY/OR	COMMON AUDIO
16	X41 22DG/WT	AUDIO OUT LEFT

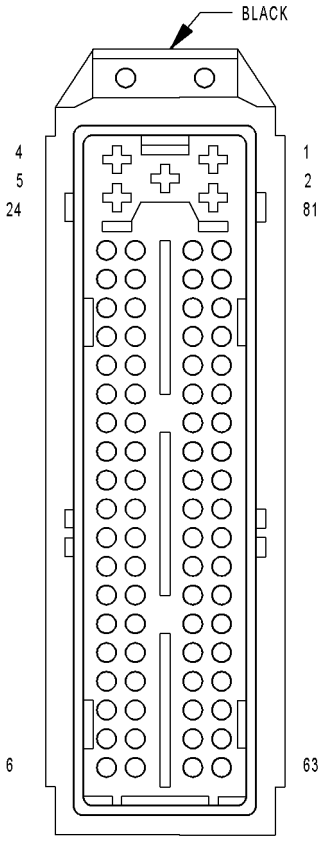

ENGINE CONTROL MODULE C1 (DIESEL)

ENGINE CONTROL MODULE C1 (DIESEL) - BLACK 81 WAY

CAV	CIRCUIT	FUNCTION
1	Z130 14BK/BR	GROUND
2	Z131 14BK/DG	GROUND
3	K20 14BR/GY	GENERATOR FIELD CONTROL
4	K342 14BR/WT	ECM/PCM RELAY OUTPUT
5	K342 14BR/WT	ECM/PCM RELAY OUTPUT
6	-	-
7	D25 20WT/VT	PCI BUS
8	K944 20BK/GY	CAMSHAFT POSITION SENSOR SHIELD GROUND
9	K44 20DB/GY	CAMSHAFT POSITION SENSOR SIGNAL
10	-	-
11	K37 20DB/YL	BOOST PRESSURE SENSOR SIGNAL
12	K55 20DB/OR	MASS AIR FLOW SENSOR SIGNAL
13	K78 20GY	FUEL PRESSURE SENSOR SIGNAL
14	-	-
15	K22 20OR/DB	ACCELERATOR PEDAL POSITION SENSOR SIGNAL NO. 1
16	K80 20DB/TN	FUEL PRESSURE SENSOR GROUND
17	-	-
18	-	-
19	K342 20BR/WT	ECM/PCM RELAY OUTPUT
20	Z138 20BK/OR	GROUND
21	K900 20DB/DG	SENSOR GROUND
22	F202 20PK/GY	FUSED IGNITION SWITCH OUTPUT (RUN-START)
23	F851 20LB/PK	SENSOR REFERENCE VOLTAGE B
24	K3 20BR/OR	CRANKSHAFT POSITION SENSOR SIGNAL NO. 1
25	-	-
26	-	-
27	-	-
28	-	-
29	-	-
30	G6 20VT/GY	ENGINE OIL PRESSURE SENSOR SIGNAL
31	F853 20LG/PK	WATER IN FUEL SENSOR SIGNAL
32	K25 20BR/TN	BATTERY TEMPERATURE SENSOR SIGNAL
33	-	-
34	K4 20BK/LB	SENSOR GROUND
35	F852 20VT/PK	ACCELERATOR PEDAL POSITION SENSOR 5 VOLT SUPPLY
36	C18 20LB/BR	A/C PRESSURE SENSOR SIGNAL
37	-	-
38	V37 20VT/TN	SPEED CONTROL SWITCH SIGNAL
39	-	-
40	K2 20TN/BK	ENGINE COOLANT TEMPERATURE SENSOR SIGNAL
41	K21 20DB/LG	INTAKE AIR TEMPERATURE SENSOR SIGNAL
42	Z122 18WT	GROUND (DRAIN)
43	K24 20BR/LB	CRANKSHAFT POSITION SENSOR SIGNAL NO. 2
44	-	-
45	-	-
46	-	-
47	L50 20WT/TN	PRIMARY BRAKE SWITCH SIGNAL
48	B29 20DG/WT	SECONDARY BRAKE SWITCH SIGNAL
49	T751 20YL	FUSED IGNITION SWITCH OUTPUT (START)
50	F855 20PK/YL	SENSOR REFERENCE VOLTAGE A
51	-	-
52	K121 20DB	BOOST PRESSURE SENSOR GROUND
53	-	-
54	K957 20BK/OR	MASS AIR FLOW SENSOR GROUND
55	N7 20DB/OR	VEHICLE SPEED SENSOR SIGNAL
56	C918 20BK/LB	A/C PRESSURE SENSOR GROUND
57	T10 20DG/LG (EATX)	TORQUE MANAGEMENT REQUEST SENSE
58	-	-
59	-	-
60	K9 20LB	FUEL PRESSURE SENSOR 5 VOLT SUPPLY

61	K51 20BR/WT	ECM/PCM RELAY CONTROL
62	-	-
63	D21 20WT/DG	SCI TRANSMIT (ECM)
64	K151 20WT	LOW IDLE POSITION SWITCH SENSE
65	-	-
66	K936 20BR/YL	ENGINE OIL PRESSURE SENSOR GROUND
67	-	-
68	-	-
69	C13 20LB/OR	A/C COMPRESSOR CLUTCH RELAY CONTROL
70	N210 20DB/DG	LOW SPEED RADIATOR FAN RELAY CONTROL
71	-	-
72	N21 20DB/TN	LIFT PUMP RELAY CONTROL
73	-	-
74	T752 20DG/OR	STARTER MOTOR RELAY CONTROL
75	-	-
76	-	-
77	K152 20DB/WT	GLOW PLUG RELAY CONTROL
78	N122 20DB/YL	HIGH SPEED RADIATOR FAN DUAL RELAY CONTROL
79	-	-
80	K87 20BR	FUEL PRESSURE SOLENOID CONTROL
81	K87 20BR	FUEL PRESSURE SOLENOID CONTROL

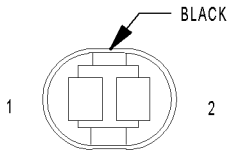

EVAPORATOR TEMPERATURE SENSOR

EVAPORATOR TEMPERATURE SENSOR - BLACK 2 WAY

CAV	CIRCUIT	FUNCTION
1	C21 20DB/LG	EVAPORATOR TEMPERATURE SENSOR SIGNAL
2	C121 20DB/DG	SENSOR GROUND

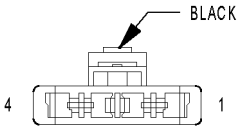

FRONT BLOWER MODULE C1 (ATC)

FRONT BLOWER MODULE C1 (ATC) - BLACK 4 WAY

CAV	CIRCUIT	FUNCTION
1	-	-
2	Z134 12BK/OR	GROUND
3	C56 20DB/LB	BLOWER MOTOR CONTROL
4	C7 12DB	FUSED FRONT BLOWER MOTOR RELAY OUTPUT

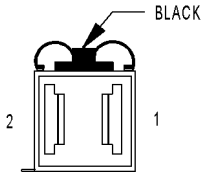

FRONT BLOWER MODULE C2 (ATC)

FRONT BLOWER MODULE C2 (ATC) - BLACK 2 WAY

CAV	CIRCUIT	FUNCTION
1	C7 12DB (EXCEPT EX-PORT)	HIGH SPEED BLOWER MOTOR
1	C7 12DG (EXPORT)	HIGH SPEED BLOWER MOTOR
2	C70 12DB/YL (EXCEPT EXPORT)	BLOWER MOTOR DRIVER
2	C70 12BK (EXPORT)	BLOWER MOTOR DRIVER

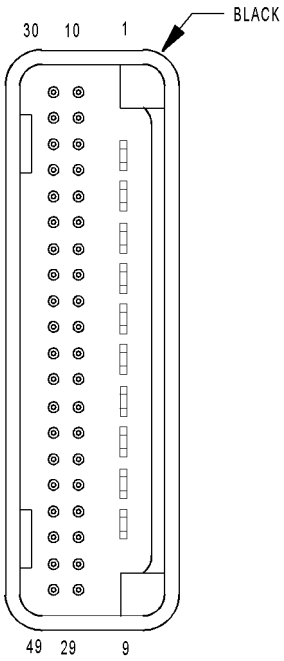

FRONT CONTROL MODULE

FRONT CONTROL MODULE - BLACK 49 WAY

CAV	CIRCUIT	FUNCTION
1	A1	B(+)
2	A1	B(+)
3	L43	LEFT LOW BEAM DRIVER
4	L34	RIGHT HIGH BEAM DRIVER
5	L33	LEFT HIGH BEAM DRIVER
6	L44	RIGHT LOW BEAM DRIVER
7	-	-
8	Z117, Z118, Z343, Z344	GROUND
9	A1	B(+)
10	FCM 10	HORN RELAY CONTROL
11	-	-
12	P201 (EXCEPT EXPORT)	ADJUSTABLE PEDALS RELAY CONTROL
13	FCM 13	PARK LAMP RELAY CONTROL
14	FCM 14	FRONT WIPER ON/OFF RELAY CONTROL
15	C41 (DIESEL)	CABIN HEATER ASSIST CONTROL
16	W7	FRONT WIPER PARK SWITCH SENSE
17	X3	HORN SWITCH SENSE
18	W1	WASHER FLUID LEVEL SWITCH SENSE
19	FCM 19	FUSED IGNITION SWITCH OUTPUT (START)
20	FCM 20	FUSED (+)
21	L78	FUSED PARK LAMP RELAY OUTPUT (RIGHT)
22	D25	PCI BUS
23	G931 (DIESEL)	AMBIENT TEMPERATURE SENSOR RETURN
24	-	NOT USED
25	G31 (DIESEL)	AMBIENT TEMPERATURE SENSOR SIGNAL
26	L13 (EXPORT)	HEADLAMP ADJUST SIGNAL
27	F1, F2	FCM OUTPUT (UNLOCK-RUN-START)
28	-	NOT USED
29	F100	ORC RUN ONLY DRIVER
30	FCM 30	FRONT/REAR BLOWER MOTOR RELAY CONTROL
31	FCM 31	DEFOGGER RELAY CONTROL
32	FCM 32 (EXPORT)	HEADLAMP WASHER RELAY CONTROL
33	FCM 33	FRONT FOG LAMP RELAY CONTROL
34	FCM 34	FRONT WIPER HIGH/LOW RELAY CONTROL
35	FCM 35	ACCESSORY RELAY CONTROL (RUN-ACC)
36	B20	BRAKE FLUID LEVEL SWITCH SENSE
37	F20	FUSED IGNITION SWITCH OUTPUT (RUN-START)
38	A1	B(+) (WHEN IPM C5 CPA IS NOT ENGAGED)
39	T2 (MTX)	TRS REVERSE SENSE
40	-	NOT USED
41	L77	FUSED PARK LAMP RELAY OUTPUT (LEFT)
42	D123	FLASH PROGRAM ENABLE
43	Z116	GROUND
44	L50 (DIESEL)	PRIMARY BRAKE SWITCH SIGNAL
44	L50 (GAS)	BRAKE LAMP SWITCH OUTPUT
45	W10	FRONT WASHER PUMP MOTOR CONTROL
46	W20	REAR WASHER PUMP MOTOR CONTROL
47	K32	BRAKE TRANSMISSION SHIFT INTERLOCK SOLENOID CONTROL
48	F201	ORC RUN-START DRIVER
49	-	-

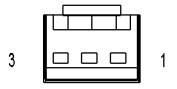

FRONT INTRUSION SENSOR (UNITED KINGDOM)

FRONT INTRUSION SENSOR (UNITED KINGDOM) - 3 WAY

CAV	CIRCUIT	FUNCTION
1	G460 20DG/VT	FRONT INTRUSION SENSOR SIGNAL
2	-	-
3	G946 20LG/VT	SENSOR GROUND

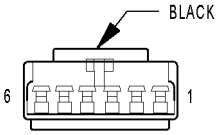

FRONT READING LAMPS/SWITCH

FRONT READING LAMPS/SWITCH - BLACK 6 WAY

CAV	CIRCUIT	FUNCTION
1	E15 20OR/DB (EXCEPT BASE)	ASH/RECEIVER LAMP FEED
2	Z137 20BK/LB	GROUND
3	-	-
4	M27 20YL/LB	READING LAMPS DRIVER
5	M21 20YL/BR	COURTESY LAMPS DRIVER
6	-	-

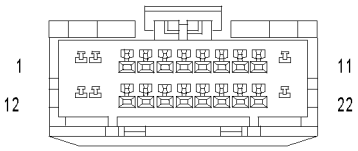

HANDS FREE MODULE C1

HANDS FREE MODULE C1 - 22 WAY

CAV	CIRCUIT	FUNCTION
1	A114 18GY/RD	FUSED(+) (I.O.D.)
2	-	-
3	-	-
4	-	-
5	X722 20BK/LB	MICROPHONE 2 IN (+)
6	-	-
7	-	-
8	-	-
9	-	-
10	-	-
11	-	-
12	L1 20BK/WT (AUTOMATIC DAY/NIGHT MIRROR)	BACK-UP LAMP FEED
13	-	-
14	-	-
15	X730 20BK/VT	VOICE RECOGNITION/PHONE SWITCH SIGNAL
16	X712 20BK/GY	MICROPHONE 1 IN (+)
17	X792 20BK/WT	MICROPHONE IN (-)
18	-	-
19	-	-
20	X793 20DB	IGNITION RUN/ACC SIGNAL
21	X835 20BK	SENSOR GROUND
22	Z530 18GY/BK (LUXURY)	GROUND

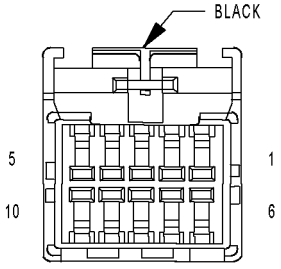

HANDS FREE MODULE C2

HANDS FREE MODULE C2 - BLACK 10 WAY

CAV	CIRCUIT	FUNCTION
1	X112 20DG/GY	IGNITION RUN/ACC SIGNAL
2	D25 20WT/VT	PCI BUS
3	-	-
4	X795 22GY/OR	AUDIO GROUND
5	X704 22GY/WT	RIGHT AUDIO OUTPUT
6	X160 20GY/YL	FUSED B(+)
7	E14 22OR/TN	PANEL LAMPS DRIVER
8	-	-
9	Z141 20BK/TN	GROUND
10	X703 22DG/WT	LEFT AUDIO OUTPUT

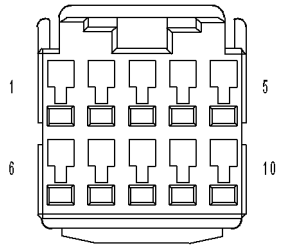

HANDS FREE MODULE C3

HANDS FREE MODULE C3 - 10 WAY

CAV	CIRCUIT	FUNCTION
1	X40 22GY/WT	AUDIO OUT RIGHT
2	X140 22GY/OR	COMMON AUDIO
3	X235 20GY/LB (CD CHANGER)	SHIELD
3	X955 22 (DVD/CD CHANGER)	SHIELD
4	D25 20WT/VT	PCI BUS
5	X112 20DG/GY	IGNITION SWITCH SIGNAL
6	X41 22DG/WT	AUDIO OUT LEFT
7	Z141 20BK/TN (CD CHANGER)	GROUND
8	-	-
9	E14 22OR/TN	PANEL LAMPS DRIVER
10	X160 20GY/YL (CD CHANGER)	FUSED B(+)

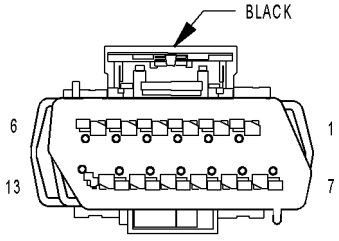

HEADLAMP SWITCH

HEADLAMP SWITCH - BLACK 13 WAY

CAV	CIRCUIT	FUNCTION
1	Z403 20BK/YL (EXPORT)	GROUND
2	L78 20WT/OR (EXPORT)	FUSED PARK LAMP RELAY OUTPUT (RIGHT)
3	-	-
4	Z407 22BK/OR	GROUND
5	L36 20WT/DB (EXPORT)	REAR FOG LAMP INDICATOR DRIVER
6	L900 22WT/YL	HEADLAMP SWITCH RETURN
7	L13 20WT/YL (EXPORT)	HEADLAMP ADJUST SIGNAL
8	E19 20OR/BR (AUTOMATIC HEADLAMPS)	HEADLAMP SWITCH DIMMER SIGNAL
9	-	-
10	L39 22WT/OR (HIGHLINE)	FRONT FOG LAMP INDICATOR DRIVER
11	L307 20WT/BR	HEADLAMP SWITCH MUX
12	E2 22OR/BR	PANEL LAMPS DIMMER SIGNAL
13	-	-

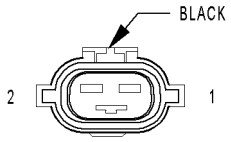

HEADLAMP WASHER PUMP MOTOR (EXPORT)

HEADLAMP WASHER PUMP MOTOR (EXPORT) - BLACK 2 WAY

CAV	CIRCUIT	FUNCTION
1	V53 12BR/OR	HEADLAMP WASHER RELAY OUTPUT
2	Z243 12BK/OR	GROUND

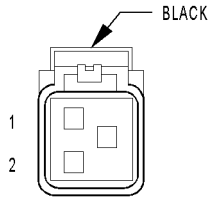

HIGH NOTE HORN

HIGH NOTE HORN - BLACK 2 WAY

CAV	CIRCUIT	FUNCTION
1	Z299 20BK/OR	GROUND
2	X2 18DG/OR	HORN RELAY OUTPUT

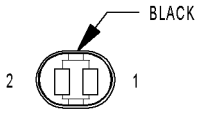

HOOD AJAR SWITCH (EXPORT)

HOOD AJAR SWITCH (EXPORT) - BLACK 2 WAY

CAV	CIRCUIT	FUNCTION
1	G70 22VT/LB	HOOD AJAR SWITCH SENSE
2	Z470 22BK/LB	GROUND

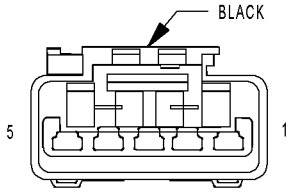

IGNITION SWITCH

IGNITION SWITCH - BLACK 5 WAY

CAV	CIRCUIT	FUNCTION
1	G900 20VT/DB	IGNITION SWITCH SENSE RETURN
2	G20 20VT/BR	IGNITION SWITCH SENSE
3	F20 20PK/WT	FUSED IGNITION SWITCH OUTPUT (RUN-START)
3	F20 20PK/WT (LHD)	FUSED IGNITION SWITCH OUTPUT (RUN-START)
4	T751 20YL	FUSED IGNITION SWITCH OUTPUT (START)
5	A106 20LB/RD	FUSED B(+)

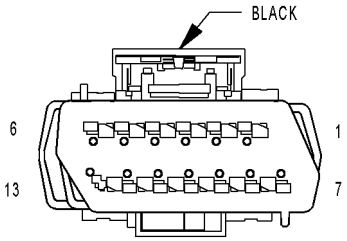

INSTRUMENT CLUSTER

INSTRUMENT CLUSTER - BLACK 13 WAY

CAV	CIRCUIT	FUNCTION
1	E13 20OR/WT	PANEL LAMPS DRIVER
2	L160 20WT/TN (EXCEPT EXPORT)	RIGHT TURN INDICATOR DRIVER
3	G7 20VT/GY (EXPORT)	LOW OIL PRESSURE INDICATOR DRIVER
4	G3 20VT/LB (EXPORT)	MALFUNCTION INDICATOR LAMP DRIVER
5	L134 20WT/GY (EXPORT)	HIGH BEAM INDICATOR DRIVER
6	A701 18BR/RD	FUSED B(+) (HAZARD)
7	Z108 18BK/LG	GROUND
8	G700 20VT/YL (DIESEL)	SUPPLEMENTAL HEAT INDICATOR SENSE
8	L161 20WT/LG (EXCEPT EXPORT)	LEFT TURN INDICATOR DRIVER
9	D25 20WT/VT	PCI BUS
10	B25 16DG/WT (EXCEPT EXPORT)	PARK BRAKE SWITCH SENSE
10	B25 18DG/WT (LHD EXPORT)	PARK BRAKE SWITCH SENSE
10	B25 20DG/WT (RHD)	PARK BRAKE SWITCH SENSE
11	G26 22VT/OR	CHIME DRIVER
12	G150 22VT/BR	INSTRUMENT CLUSTER WAKE UP SENSE
13	Z18 18BK/LB	GROUND

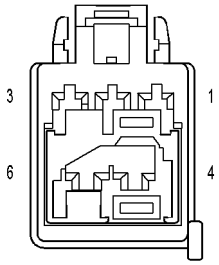

INSTRUMENT PANEL SWITCH BANK (EXCEPT HEATED SEATS)

INSTRUMENT PANEL SWITCH BANK (EXCEPT HEATED SEATS) - 6 WAY

CAV	CIRCUIT	FUNCTION
1	E14 20OR/TN	PANEL LAMPS DRIVER
2	G104 20VT/GY (OCCUPANT SENSING)	PASSENGER AIRBAG ON/OFF INDICATOR LAMP GROUND
3	F201 20PK/OR	ORC RUN-START DRIVER
4	L91 22WT/DB	HAZARD SWITCH SENSE
5	-	-
6	Z406 20BK/BR	GROUND

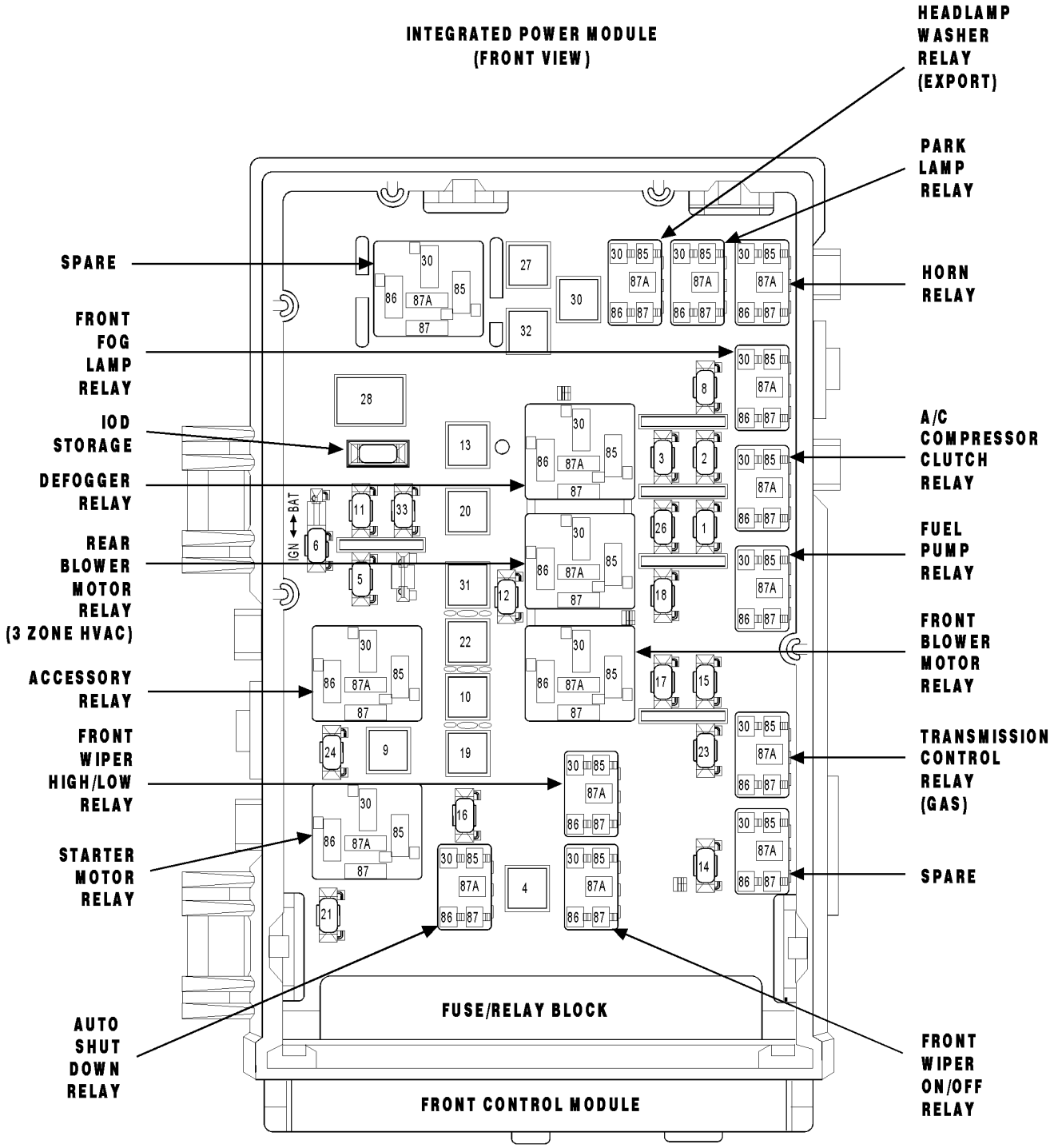
INTEGRATED POWER MODULE
(FRONT VIEW)
HEADLAMP WASHER RELAY (EXPORT)
PARK LAMP RELAY
SPARE
HORN RELAY
FRONT FOG LAMP RELAY
IOD STORAGE
A/C COMPRESSOR CLUTCH RELAY
DEFOGGER RELAY
FUEL PUMP RELAY
REAR BLOWER MOTOR RELAY (3 ZONE HVAC)
FRONT BLOWER MOTOR RELAY
ACCESSORY RELAY
TRANSMISSION CONTROL RELAY (GAS)
FRONT WIPER HIGH/LOW RELAY
STARTER MOTOR RELAY
SPARE
AUTO SHUT DOWN RELAY
FRONT WIPER ON/OFF RELAY
IGN
BAT
FUSE/RELAY BLOCK
FRONT CONTROL MODULE

FUSES (IPM)

FUSE NO.	AMPS	FUSED CIRCUIT	FUNCTION
1	20A	INTERNAL	FUSED B(+)
2	15A	INTERNAL	FUSED PARK LAMP RELAY OUTPUT
3	15A	INTERNAL	FUSED PARK LAMP RELAY OUTPUT
4	30A	INTERNAL	FUSED B(+)
5	20A	F306 16DB/PK	FUSED ACCESSORY RELAY OUTPUT
6	20A	F307 16LB/PK (ACCESSORY RELAY POSITION)	FUSED ACCESSORY RELAY OUTPUT
6	20A	F307 16LB/PK (BATTERY POSITION)	FUSED B(+)
8	20A	INTERNAL	FUSED B(+)
9	40A	INTERNAL	FUSED B(+)
10	40A	C7 12DB	FUSED FRONT BLOWER MOTOR RELAY OUTPUT
11	20A	F302 18GY/PK	FUSED ACCESSORY RELAY OUTPUT
12	25A	C51 12LB/BR	FUSED REAR BLOWER MOTOR RELAY OUTPUT
13	40A	C15 12DB/WT	FUSED DEFOGGER RELAY OUTPUT
14	20A	INTERNAL	FUSED B(+) (I.O.D.)
15	20A	INTERNAL (DIESEL)	FUSED B(+)
15	20A	INTERNAL (EATX)	FUSED B(+)
16	25A	INTERNAL	FUSED B(+)
17	20A	INTERNAL	FUSED B(+)
18	15A	INTERNAL	FUSED B(+)
19	40A	A101 12VT/RD	FUSED B(+)
20	30A	A102 12WT/RD	FUSED B(+)
21	25A	A111 12DG/RD	FUSED B(+)
22	40A	A110 12OR/RD	FUSED B(+)
23	10A	A106 20LB/RD	FUSED B(+)
24	20A	A701 16BR/RD	FUSED B(+) (HAZARD)
26	20A	A103 18GY/RD	FUSED B(+)
27	40A	A112 12OR/RD	FUSED B(+)
28	40A	F30 12PK/YL	FUSED IGNITION SWITCH OUTPUT (RUN-ACC)
30	40A	INTERNAL (EXPORT)	FUSED B(+)
31	40A	A113 12WT/RD	FUSED B(+)
32	40A	A115 12YL/RD	FUSED B(+)
33	15A	INTERNAL	FUSED ACCESSORY RELAY OUTPUT

ACCESSORY RELAY

CAV	CIRCUIT	FUNCTION
30	INTERNAL	B(+)
85	FCM 35	ACCESSORY RELAY CONTROL (RUN-ACC)
86	INTERNAL	B(+)
87	INTERNAL	FUSED ACCESSORY RELAY OUTPUT
87A	-	-

DEFOGGER RELAY

CAV	CIRCUIT	FUNCTION
30	INTERNAL	B(+)
85	FCM 31	DEFOGGER RELAY CONTROL
86	INTERNAL	B(+)
87	INTERNAL	DEFOGGER RELAY OUTPUT
87A	-	-

FRONT BLOWER MOTOR RELAY

CAV	CIRCUIT	FUNCTION
30	INTERNAL	B(+)
85	FCM 30	FRONT BLOWER MOTOR RELAY CONTROL
86	INTERNAL	B(+)
87	C7 12DB	FUSED FRONT BLOWER MOTOR RELAY OUTPUT
87A	-	-

FRONT WIPER HIGH/LOW RELAY

CAV	CIRCUIT	FUNCTION
30	INTERNAL	FRONT WIPER ON/OFF RELAY OUTPUT
85	FCM 34	FRONT WIPER HIGH/LOW RELAY CONTROL
86	INTERNAL	FRONT WIPER ON/OFF RELAY OUTPUT
87	W4 12BR/OR	FRONT WIPER HIGH/LOW RELAY HIGH SPEED OUTPUT
87A	W3 12BR/WT	FRONT WIPER HIGH/LOW RELAY LOW SPEED OUTPUT

FRONT WIPER ON/OFF RELAY

CAV	CIRCUIT	FUNCTION
30	INTERNAL	FRONT WIPER ON/OFF RELAY OUTPUT
85	INTERNAL	FUSED B(+)
86	FCM 14	FRONT WIPER ON/OFF RELAY CONTROL
87	INTERNAL	FUSED B(+)
87A	INTERNAL	GROUND

HEADLAMP WASHER RELAY (EXPORT)

CAV	CIRCUIT	FUNCTION
30	INTERNAL	FUSED B(+)
85	FCM 32	HEADLAMP WASHER RELAY CONTROL
86	INTERNAL	FUSED B(+)
87	V53 12BR/OR	HEADLAMP WASHER RELAY OUTPUT
87A	-	-

HORN RELAY

CAV	CIRCUIT	FUNCTION
30	INTERNAL	B(+)
85	FCM 10	HORN RELAY CONTROL
86	INTERNAL	B(+)
87	X2 18DG/OR	HORN RELAY OUTPUT
87A	-	-

PARK LAMP RELAY

CAV	CIRCUIT	FUNCTION
30	INTERNAL	B(+)
85	FCM 13	PARK LAMP RELAY CONTROL
86	INTERNAL	B(+)
87	INTERNAL	PARK LAMP RELAY OUTPUT
87A	-	-

REAR BLOWER MOTOR RELAY (3 ZONE HVAC)

CAV	CIRCUIT	FUNCTION
30	INTERNAL	B(+)
85	FCM 30	REAR BLOWER MOTOR RELAY CONTROL
86	INTERNAL	B(+)
87	C51 12LB/BR	FUSED REAR BLOWER MOTOR RELAY OUTPUT
87A	-	-

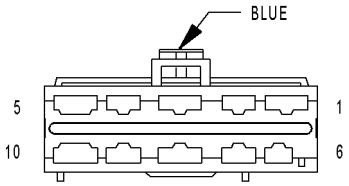

INTEGRATED POWER MODULE C4

INTEGRATED POWER MODULE C4 - BLUE 10 WAY

CAV	CIRCUIT	FUNCTION
1	Z127 12BK (ASSY. PLANT EVAC & FILL)	GROUND
2	T750 12YL/GY	STARTER MOTOR RELAY OUTPUT
3	K342 16BR/WT (DIESEL)	ECM/PCM RELAY OUTPUT
3	K342 16BR/WT (GAS)	ASD RELAY OUTPUT
4	F500 16DG/PK (ASSY. PLANT EVAC & FILL)	FUSED IGNITION SWITCH OUTPUT (RUN)
5	-	-
6	D25 18WT/VT (ABS)	PCI BUS
7	A107 12TN/RD (ABS)	FUSED B(+)
8	A111 12DG/RD (ABS)	FUSED B(+)
9	-	-
10	-	-

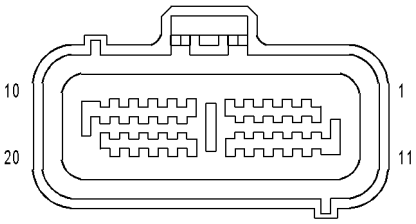

INTEGRATED POWER MODULE C7

INTEGRATED POWER MODULE C7 - 20 WAY

CAV	CIRCUIT	FUNCTION
1	C16 20DB/GY	FUSED DEFOGGER RELAY OUTPUT
2	T141 20YL/OR (DIESEL)	FUSED IGNITION SWITCH OUTPUT (START)
2	T751 20YL (GAS)	FUSED IGNITION SWITCH OUTPUT (START)
3	D25 20WT/VT	PCI BUS
4	L13 20WT/YL (EXPORT)	HEADLAMP ADJUST SIGNAL
5	K32 18DB/YL	BRAKE TRANSMISSION SHIFT INTERLOCK SOLENOID CONTROL
6	-	-
7	W7 20BR/GY	WIPER PARK SWITCH SENSE
8	B20 20DG/OR	BRAKE FLUID LEVEL SWITCH SENSE
9	F201 20PK/OR	ORC RUN-START DRIVER
10	-	-
11	A106 20LB/RD	FUSED B(+)
12	P201 20LG/DB (EXCEPT EXPORT/EXCEPT MEMORY)	ADJUSTABLE PEDALS RELAY CONTROL
13	F2 18PK/YL	FCM OUTPUT (UNLOCK-RUN-START)
14	-	-
15	A114 16GY/RD	FUSED B(+) (I.O.D.)
16	D123 20WT/BR	FLASH PROGRAM ENABLE
17	L50 18WT/TN (DIESEL)	PRIMARY BRAKE SWITCH SIGNAL
17	L50 18WT/TN (GAS)	BRAKE LAMP SWITCH OUTPUT
18	-	-
19	X3 20DG/VT	HORN SWITCH SENSE
20	F100 18PK/VT	ORC RUN ONLY DRIVER

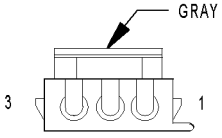

LEFT B-PILLAR SWITCH (POWER SLIDING DOOR)

LEFT B-PILLAR SWITCH (POWER SLIDING DOOR) - GRAY 3 WAY

CAV	CIRCUIT	FUNCTION
1	Z61 22BK/DG	GROUND
2	-	-
3	G41 22VT/DG	LEFT SLIDING DOOR PILLAR SWITCH MUX

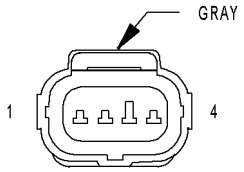

LEFT CINCH/ RELEASE MOTOR (POWER SLIDING DOOR)

LEFT CINCH/RELEASE MOTOR (POWER SLIDING DOOR) - GRAY 4 WAY

CAV	CIRCUIT	FUNCTION
1	Q49 18TN/WT	LEFT CINCH/RELEASE MOTOR UNLATCH DRIVER
2	Z249 18BK/WT	GROUND
3	Q45 18OR/GY	LEFT CINCH/RELEASE MOTOR CLUTCH DRIVER
4	Q47 18TN/GY	LEFT CINCH/RELEASE MOTOR LATCH DRIVER

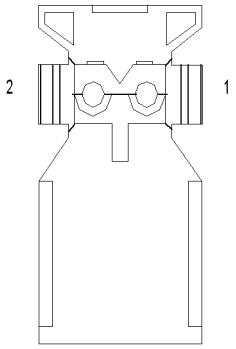

LEFT CURTAIN AIRBAG SQUIB

LEFT CURTAIN AIRBAG SQUIB - 2 WAY

CAV	CIRCUIT	FUNCTION
1	R1 20LB/WT	LEFT CURTAIN SQUIB LINE 2
2	R3 20LB/OR	LEFT CURTAIN SQUIB LINE 1

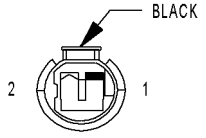

LEFT CYLINDER LOCK SWITCH (EXPORT)

LEFT CYLINDER LOCK SWITCH (EXPORT) - BLACK 2 WAY

CAV	CIRCUIT	FUNCTION
1	Z463 20BK/LB	GROUND
2	G163 20VT/LB	LEFT CYLINDER LOCK SWITCH MUX

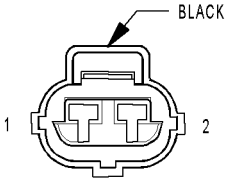

LEFT FRONT DOOR AJAR SWITCH (BASE)

LEFT FRONT DOOR AJAR SWITCH (BASE) - BLACK 2 WAY

CAV	CIRCUIT	FUNCTION
1	G75 20VT	LEFT FRONT DOOR AJAR SWITCH SENSE
2	Z75 20BK/VT	GROUND

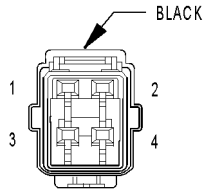

LEFT FRONT DOOR LOCK MOTOR/AJAR SWITCH (EXCEPT BASE)

LEFT FRONT DOOR LOCK MOTOR/AJAR SWITCH (EXCEPT BASE) - BLACK 4 WAY

CAV	CIRCUIT	FUNCTION
1	G75 20VT	LEFT FRONT DOOR AJAR SWITCH SENSE
2	Z75 20BK/VT	GROUND
3	P1 20TN/LG	LEFT FRONT DOOR UNLOCK DRIVER
4	P3 20TN/WT	LEFT FRONT DOOR LOCK DRIVER

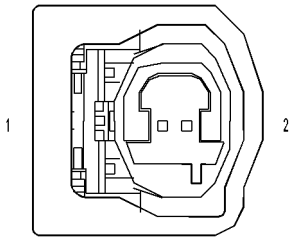

LEFT FRONT IMPACT SENSOR (EXCEPT EXPORT)

LEFT FRONT IMPACT SENSOR (EXCEPT EXPORT) - 2 WAY

CAV	CIRCUIT	FUNCTION
1	R81 20LB/WT	LEFT FRONT IMPACT SENSOR GROUND
2	R79 20LB/VT	LEFT FRONT IMPACT SENSOR SIGNAL

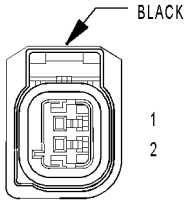

LEFT FRONT IMPACT SENSOR (EXPORT)

LEFT FRONT IMPACT SENSOR (EXPORT) - BLACK 2 WAY

CAV	CIRCUIT	FUNCTION
1	R81 20LB/WT	LEFT FRONT IMPACT SENSOR GROUND
2	R79 20LB/VT	LEFT FRONT IMPACT SENSOR SIGNAL

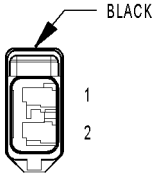

LEFT FULL OPEN SWITCH (POWER SLIDING DOOR)

LEFT FULL OPEN SWITCH (POWER SLIDING DOOR) - BLACK 2 WAY

CAV	CIRCUIT	FUNCTION
1	Q53 20OR	LEFT FULL OPEN SWITCH SENSE
2	Z77 20BK/GY	GROUND

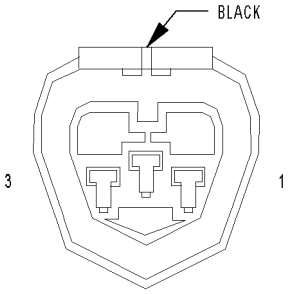

LEFT HEADLAMP (CARAVAN/VOYAGER EXCEPT EXPORT)

LEFT HEADLAMP (CARAVAN/VOYAGER EXCEPT EXPORT) - BLACK 3 WAY

CAV	CIRCUIT	FUNCTION
1	L43 18WT/DB	LEFT LOW BEAM DRIVER
2	Z343 18BK/LG	GROUND
3	L33 18WT/LG	LEFT HIGH BEAM DRIVER

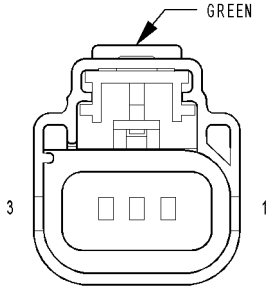

LEFT HEADLAMP (TOWN AND COUNTRY)

LEFT HEADLAMP (TOWN AND COUNTRY) - GREEN 3 WAY

CAV	CIRCUIT	FUNCTION
1	L43 18WT/DB	LEFT LOW BEAM DRIVER
2	Z343 18BK/LG	GROUND
3	L33 18WT/LG	LEFT HIGH BEAM DRIVER

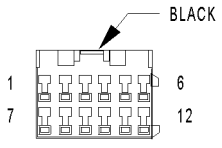

LEFT POWER MIRROR

LEFT POWER MIRROR - BLACK 12 WAY

CAV	CIRCUIT	FUNCTION
1	P171 20TN/YL (EXPORT)	LEFT FOLDING MIRROR UNFOLD DRIVER
2	P112 22TN/OR (AUTOMATIC DAY/NIGHT MIRROR)	MIRROR B(+)
3	P114 22TN/WT (AUTOMATIC DAY/NIGHT MIRROR)	MIRROR B(-)
4	P65 20TN/VT (MEMORY)	LEFT MIRROR HORIZONTAL POSITION SIGNAL
5	P69 20TN/WT (MEMORY)	LEFT MIRROR SENSOR GROUND
6	P64 20TN (MEMORY)	LEFT MIRROR VERTICAL POSITION SIGNAL
7	P159 20TN/DG (LHD EXPORT)	DRIVER FOLDING MIRROR FOLD DRIVER
7	P160 20TN/LG (RHD EXPORT)	PASSENGER FOLDING MIRROR RELAY OUTPUT
8	Z215 22BK/LG	GROUND
9	C16 20DB/GY (HEATED MIRRORS)	FUSED DEFOGGER RELAY OUTPUT
10	P73 20TN/YL	LEFT MIRROR COMMON DRIVER (RIGHT/DOWN)
11	P71 20TN/DG	LEFT MIRROR UP DRIVER
12	P75 20TN/LG	LEFT MIRROR LEFT DRIVER

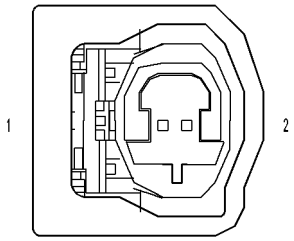

LEFT SIDE IMPACT SENSOR 1 (EXCEPT EXPORT)

LEFT SIDE IMPACT SENSOR 1 (EXCEPT EXPORT) - 2 WAY

CAV	CIRCUIT	FUNCTION
1	R15 20DB	LEFT SIDE IMPACT SENSOR 1 GROUND
2	R13 20LB	LEFT SIDE IMPACT SENSOR 1 SIGNAL

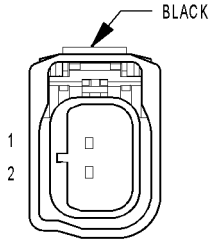

LEFT SIDE IMPACT SENSOR 1 (EXPORT)

LEFT SIDE IMPACT SENSOR 1 (EXPORT) - BLACK 2 WAY

CAV	CIRCUIT	FUNCTION
1	R15 20DB (EXCEPT RHD LWB)	LEFT SIDE IMPACT SENSOR 1 GROUND
1	R15 20LB (RHD LWB)	LEFT SIDE IMPACT SENSOR 1 GROUND
2	R13 20LB	LEFT SIDE IMPACT SENSOR 1 SIGNAL

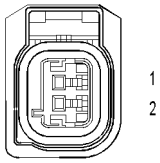

LEFT SIDE IMPACT SENSOR 2

LEFT SIDE IMPACT SENSOR 2 - 2 WAY

CAV	CIRCUIT	FUNCTION
1	R19 18LG/WT	LEFT SIDE IMPACT SENSOR 2 GROUND
2	R17 18LG	LEFT SIDE IMPACT SENSOR 2 SIGNAL

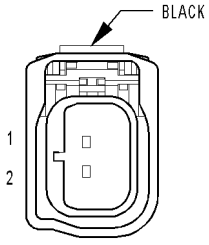

LEFT SIDE IMPACT SENSOR 3

LEFT SIDE IMPACT SENSOR 3 - BLACK 2 WAY

CAV	CIRCUIT	FUNCTION
1	R23 20LB/YL	LEFT SIDE IMPACT SENSOR 3 GROUND
2	R21 20LB/WT	LEFT SIDE IMPACT SENSOR 3 SIGNAL

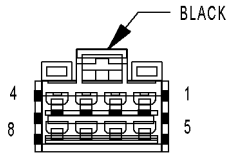

LEFT SLIDING DOOR CONTROL MODULE C1 (POWER SLIDING DOOR)

LEFT SLIDING DOOR CONTROL MODULE C1 (POWER SLIDING DOOR) - BLACK 8 WAY

CAV	CIRCUIT	FUNCTION
1	Q45 18OR/GY	LEFT CINCH/RELEASE MOTOR CLUTCH DRIVER
2	Q67 16TN/BR	LEFT SLIDING DOOR OPEN DRIVER
3	Q69 16TN/OR	LEFT SLIDING DOOR CLOSE DRIVER
4	-	-
5	A113 14WT/RD	FUSED B(+)
6	-	-
7	-	-
8	Z123 14BK/WT	GROUND

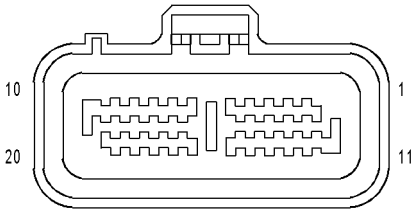

LEFT SLIDING DOOR CONTROL MODULE C2 (POWER SLIDING DOOR)

LEFT SLIDING DOOR CONTROL MODULE C2 (POWER SLIDING DOOR) - 20 WAY

CAV	CIRCUIT	FUNCTION
1	Q71 20TN/VT	LEFT DOOR MOTOR HALL EFFECT SUPPLY
2	-	-
3	Q35 20OR/GY	LEFT DOOR LOCK SENSE
4	Q55 20OR/BR	LEFT DOOR IN/OUT HANDLE SWITCH SENSE
5	-	-
6	-	-
7	Q63 18OR/TN	LEFT DOOR MOTOR CLUTCH DRIVER
8	Q47 18TN/GY	LEFT CINCH/RELEASE MOTOR LATCH DRIVER
9	Q49 18TN/WT	LEFT CINCH/RELEASE MOTOR UNLATCH DRIVER
10	-	-
11	D25 20WT/VT	PCI BUS
12	G77 20TN/OR	LEFT SLIDING DOOR AJAR SWITCH SENSE
13	Q59 20OR/YL	LEFT PAWL SWITCH SENSE
14	Q53 20OR	LEFT FULL OPEN SWITCH SENSE
15	Z25 20BK/TN	GROUND-DRIVER SIDE IDENTIFIER (LHD/RHD)
16	-	-
17	Q73 20TN/YL	LEFT DOOR MOTOR HALL EFFECT SIGNAL
18	-	-
19	G151 20VT/BR	LEFT SLIDING DOOR WAKE UP SIGNAL
20	Z25 20BK/TN	GROUND

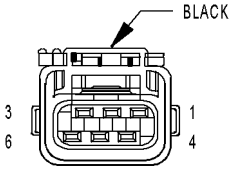

LEFT SLIDING DOOR LATCH SENSING SWITCH (POWER SLIDING DOOR)

LEFT SLIDING DOOR LATCH SENSING SWITCH (POWER SLIDING DOOR) - BLACK 6 WAY

CAV	CIRCUIT	FUNCTION
1	Z77 20BK/GY	GROUND
2	Q59 20OR/YL	LEFT PAWL SWITCH SENSE
3	G77 20TN/OR	LEFT SLIDING DOOR AJAR SWITCH SENSE
4	Z77 20BK/GY	GROUND
5	Q55 20OR/BR	LEFT DOOR IN/OUT HANDLE SWITCH SENSE
6	-	-

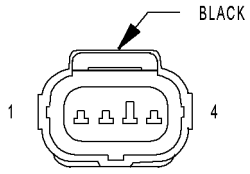

LEFT SLIDING DOOR LOCK MOTOR (POWER SLIDING DOOR)

LEFT SLIDING DOOR LOCK MOTOR (POWER SLIDING DOOR) - BLACK 4 WAY

CAV	CIRCUIT	FUNCTION
1	P5 20TN/OR	LEFT SLIDING DOOR LOCK UNLOCK DRIVER
2	P32 20TN/VT	LEFT SLIDING DOOR LOCK DRIVER
3	Q35 20OR/GY	LEFT DOOR LOCK SENSE
4	Z77 20BK/GY	GROUND

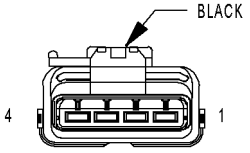

LEFT SLIDING DOOR LOCK MOTOR/AJAR SWITCH (MANUAL SLIDING DOOR)

LEFT SLIDING DOOR LOCK MOTOR/AJAR SWITCH (MANUAL SLIDING DOOR) - BLACK 4 WAY

CAV	CIRCUIT	FUNCTION
1	P5 20BK/DB	LEFT SLIDING DOOR UNLOCK DRIVER
2	P32 20BK/TN	LEFT SLIDING DOOR LOCK DRIVER
3	G77 20BK/DG	LEFT SLIDING DOOR AJAR SWITCH SENSE
4	Z77 20BK	GROUND

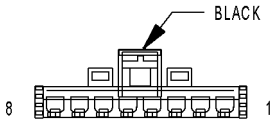

LEFT SLIDING DOOR MOTOR (POWER SLIDING DOOR)

LEFT SLIDING DOOR MOTOR (POWER SLIDING DOOR) - BLACK 8 WAY

CAV	CIRCUIT	FUNCTION
1	-	-
2	Q71 20TN/VT	LEFT DOOR MOTOR HALL EFFECT SUPPLY
3	Q69 16TN/OR	LEFT SLIDING DOOR CLOSE DRIVER
4	Z163 18BK/TN	GROUND
5	Q63 18OR/TN	LEFT DOOR MOTOR CLUTCH DRIVER
6	Q67 16TN/BR	LEFT SLIDING DOOR OPEN DRIVER
7	Z33 20BK/TN	GROUND
8	Q73 20TN/YL	LEFT DOOR MOTOR HALL EFFECT SIGNAL

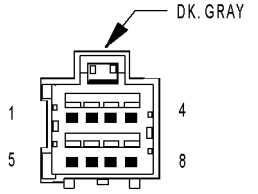

LICENSE LAMP (POWER LIFTGATE)

LICENSE LAMP (POWER LIFTGATE) - DK. GRAY 8 WAY

CAV	CIRCUIT	FUNCTION
1	L77 18WT/BR	FUSED PARK LAMP RELAY OUTPUT (LEFT)
2	Z367 20BK/BR	GROUND
3	P30 20TN/DG	LIFTGATE HANDLE SWITCH SENSE
4	Z430 20BK/LG	GROUND
5	Q94 20TN/LG	LIFTGATE CHIME DRIVER
6	Z294 20BK/LG	GROUND
7	G32 20VT/LB	LIFTGATE TEMPERATURE SENSOR SIGNAL
8	Z78 20BK/OR	GROUND

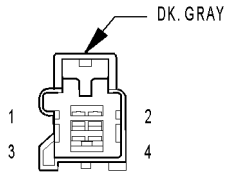

LICENSE LAMP (POWER RELEASE)

LICENSE LAMP (POWER RELEASE) - DK. GRAY 4 WAY

CAV	CIRCUIT	FUNCTION
1	L77 18WT/BR	FUSED PARK LAMP RELAY OUTPUT (LEFT)
2	Z367 20BK/BR	GROUND
3	P30 20TN/DG	LIFTGATE HANDLE SWITCH SENSE
4	Z430 20BK/LG	GROUND

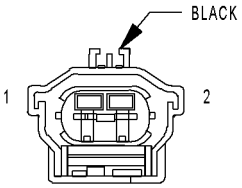

LIFTGATE AJAR SWITCH (MANUAL RELEASE)

LIFTGATE AJAR SWITCH (MANUAL RELEASE) - BLACK 2 WAY

CAV	CIRCUIT	FUNCTION
1	Z78 20BK/OR	GROUND
2	G78 20VT/OR	LIFTGATE AJAR SWITCH SENSE

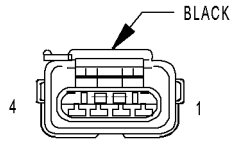

LIFTGATE AJAR SWITCH (POWER RELEASE)

LIFTGATE AJAR SWITCH (POWER RELEASE) - BLACK 4 WAY

CAV	CIRCUIT	FUNCTION
1	Z78 20BK/OR	GROUND
2	G78 20VT/OR	LIFTGATE AJAR SWITCH SENSE
3	P31 20TN/YL	LIFTGATE RELEASE DRIVER
4	Z231 20BK/YL	GROUND

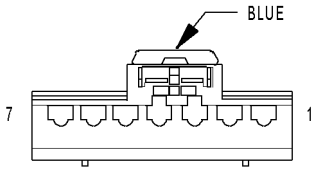

LIFTGATE CINCH/RELEASE MOTOR (POWER LIFTGATE)

LIFTGATE CINCH/RELEASE MOTOR (POWER LIFTGATE) - BLUE 7 WAY

CAV	CIRCUIT	FUNCTION
1	Z78 20BK/OR	GROUND
2	G78 20VT/OR	LIFTGATE AJAR SWITCH SENSE
3	Q60 20OR/YL	LIFTGATE PAWL SWITCH SENSE
4	Z245 18BK/GY	GROUND
5	Q85 18TN/WT	LIFTGATE LATCH RELEASE DRIVER
6	Q84 18TN/GY	LIFTGATE LATCH CINCH DRIVER
7	Q83 18OR/GY	LIFTGATE LATCH CLUTCH DRIVER

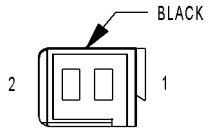

LIFTGATE LEFT PINCH SENSOR (POWER LIFTGATE)

LIFTGATE LEFT PINCH SENSOR (POWER LIFTGATE) - BLACK 2 WAY

CAV	CIRCUIT	FUNCTION
1	Q77 20OR/DB	RIGHT PINCH SENSOR SIGNAL
2	Q76 20OR/LB	PINCH SENSOR SIGNAL

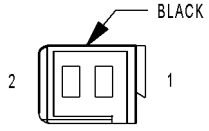

LIFTGATE RIGHT PINCH SENSOR (POWER LIFTGATE)

LIFTGATE RIGHT PINCH SENSOR (POWER LIFTGATE) - BLACK 2 WAY

CAV	CIRCUIT	FUNCTION
1	Q77 20OR/DB	RIGHT PINCH SENSOR SIGNAL
2	Z78 20BK/OR	GROUND

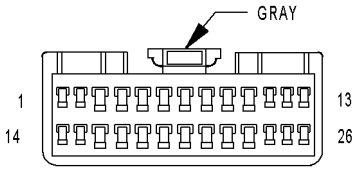

MEMORY SEAT/MIRROR/ADJUSTABLE PEDALS MODULE C1

MEMORY SEAT/MIRROR/ADJUSTABLE PEDALS MODULE C1 - GRAY 26 WAY

CAV	CIRCUIT	FUNCTION
1	P205 14LG/DB	ADJUSTABLE PEDALS MOTOR FORWARD
2	-	-
3	P69 22TN/DB (LHD)	LEFT MIRROR SENSOR GROUND
3	P66 20TN/LG (RHD)	RIGHT MIRROR SENSOR GROUND
4	-	-
5	P64 22TN (LHD)	LEFT MIRROR VERTICAL POSITION SIGNAL
5	P67 22TN/OR (RHD)	RIGHT MIRROR VERTICAL POSITION SIGNAL
6	Q103 18OR/LG (EXCEPT EXPORT)	ADJUSTABLE PEDALS SWITCH FORWARD
7	Q102 18OR/LB (EXCEPT EXPORT)	ADJUSTABLE PEDALS SWITCH REARWARD
8	P65 22TN/VT (LHD)	LEFT MIRROR HORIZONTAL POSITION SIGNAL
8	P68 20TN/YL (RHD)	RIGHT MIRROR HORIZONTAL POSITION SIGNAL
9	P73 20TN/YL (LHD)	LEFT MIRROR COMMON DRIVER (RIGHT/DOWN)
9	P70 20TN/LB (RHD)	RIGHT MIRROR COMMON DRIVER (RIGHT/DOWN)
10	-	-
11	D25 20WT/VT	PCI BUS
12	-	-
13	P206 14LG/TN (EXCEPT EXPORT)	ADJUSTABLE PEDALS MOTOR REARWARD
14	-	-
15	-	-
16	G11 20VT/TN (EXCEPT EXPORT)	ADJUSTABLE PEDALS SENSOR FEED
17	P75 20TN/LG (LHD)	LEFT MIRROR LEFT DRIVER
17	P74 20TN/DB (RHD)	RIGHT MIRROR LEFT DRIVER
18	P71 20TN/DG (LHD)	LEFT MIRROR UP DRIVER
18	P72 20TN/GY (RHD)	RIGHT MIRROR UP DRIVER
19	G12 22VT/BR (EXCEPT EXPORT)	ADJUSTABLE PEDALS SENSOR SIGNAL
20	G912 20VT/WT (EXCEPT EXPORT)	ADJUSTABLE PEDALS SENSOR RETURN
21	-	-
22	-	-
23	-	-
24	-	-
25	-	-
26	-	-

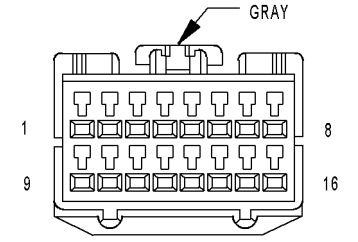

MEMORY SEAT/MIRROR/ADJUSTABLE PEDALS MODULE C2

MEMORY SEAT/MIRROR/ADJUSTABLE PEDALS MODULE C2 - GRAY 16 WAY

CAV	CIRCUIT	FUNCTION
1	P19 20LG/LB	DRIVER SEAT FRONT UP SWITCH SENSE
2	P11 20LG/YL	DRIVER SEAT REAR UP SWITCH SENSE
3	P25 20LG/VT	DRIVER SEAT HORIZONTAL POSITION SIGNAL
4	P47 20LG/LB	DRIVER SEAT RECLINER POSITION SIGNAL
5	P26 20LG	DRIVER SEAT FRONT RISER POSITION SIGNAL
6	P27 20LG/DB	DRIVER SEAT REAR RISER POSITION SIGNAL
7	P21 20LG/TN	DRIVER SEAT FRONT DOWN SWITCH SENSE
8	P13 20LG/OR	DRIVER SEAT REAR DOWN SWITCH SENSE
9	P15 20LG/WT	DRIVER SEAT HORIZONTAL FORWARD SWITCH SENSE
10	P43 20LG/VT	DRIVER SEAT RECLINER UP SWITCH SENSE
11	P29 20LG/WT	DRIVER SEAT SENSOR 5 VOLT SUPPLY
12	P28 20LG/BR	DRIVER SEAT POSITION SENSOR GROUND
13	-	-
14	P17 20LG/DG	DRIVER SEAT HORIZONTAL REARWARD SWITCH SENSE
15	P41 20LG/DB	DRIVER SEAT RECLINER DOWN SWITCH SENSE
16	-	-

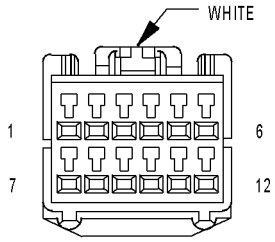

MEMORY SEAT/MIRROR/ADJUSTABLE PEDALS MODULE C3

MEMORY SEAT/MIRROR/ADJUSTABLE PEDALS MODULE C3 - WHITE 12 WAY

CAV	CIRCUIT	FUNCTION
1	P141 14LG/BR	DRIVER SEAT RECLINER DOWN DRIVER
2	P115 14LG	DRIVER SEAT HORIZONTAL FORWARD DRIVER
3	P117 14LG/LB	DRIVER SEAT HORIZONTAL REARWARD DRIVER
4	P111 14LG/YL	DRIVER SEAT REAR UP DRIVER
5	P119 14LG/DG	DRIVER SEAT FRONT UP DRIVER
6	-	-
7	-	-
8	P143 14LG/GY	DRIVER SEAT RECLINER UP DRIVER
9	P9 20LG/OR	DRIVER SEAT SWITCH B(+) SUPPLY
10	-	-
11	P113 14LG/WT	DRIVER SEAT REAR DOWN DRIVER
12	P121 14LG/DB	DRIVER SEAT FRONT DOWN DRIVER

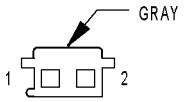

MEMORY SEAT/MIRROR/ADJUSTABLE PEDALS MODULE C4

MEMORY SEAT/MIRROR/ADJUSTABLE PEDALS MODULE C4 - GRAY 2 WAY

CAV	CIRCUIT	FUNCTION
1	A210 14OR/RD	FUSED B(+)
2	Z849 14BK/OR	GROUND

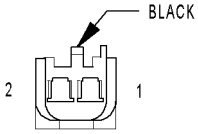

MEMORY SET SWITCH

MEMORY SET SWITCH - BLACK 2 WAY

CAV	CIRCUIT	FUNCTION
1	G200 20VT/BR (EXCEPT EXPORT)	MEMORY SELECT SWITCH MUX
1	G200 22VT/BR (EXPORT)	MEMORY SELECT SWITCH MUX
2	G920 20VT/YL (EXCEPT EXPORT)	MEMORY SELECT SWITCH RETURN
2	G920 22VT/YL (EXPORT)	MEMORY SELECT SWITCH RETURN

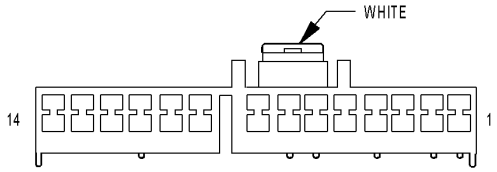

MESSAGE CENTER (EXPORT)

MESSAGE CENTER (EXPORT) - WHITE 14 WAY

CAV	CIRCUIT	FUNCTION
1	L160 20WT/TN (LHD)	RIGHT TURN INDICATOR DRIVER
1	G700 20VT/YL (RHD DIESEL)	SUPPLEMENTAL HEAT INDICATOR SENSE
2	G3 20VT/LB (LHD)	MALFUNCTION INDICATOR LAMP DRIVER
3	L134 20WT/GY (RHD)	HIGH BEAM INDICATOR DRIVER
4	L160 20WT/TN (RHD)	RIGHT TURN INDICATOR DRIVER
5	-	-
6	G7 20VT/GY (LHD)	LOW OIL PRESSURE INDICATOR DRIVER
7	A701 18BR/RD (LHD)	FUSED B(+) (HAZARD)
8	A701 18BR/RD (RHD)	FUSED B(+) (HAZARD)
9	G7 20VT/GY (RHD)	LOW OIL PRESSURE INDICATOR DRIVER
10	-	-
11	L161 20WT/LG (LHD)	LEFT TURN INDICATOR DRIVER
12	L134 20WT/GY (LHD)	HIGH BEAM INDICATOR DRIVER
13	G3 20VT/LB (RHD)	MALFUNCTION INDICATOR LAMP DRIVER
14	G700 20VT/YL (LHD DIESEL)	SUPPLEMENTAL HEAT INDICATOR SENSE
14	L161 20WT/LG (RHD)	LEFT TURN INDICATOR DRIVER

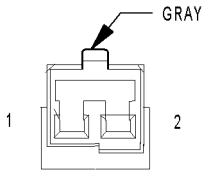

MODE DOOR ACTUATOR

MODE DOOR ACTUATOR - GRAY 2 WAY

CAV	CIRCUIT	FUNCTION
1	C135 20DB/GY (ATC)	MODE DOOR DRIVER (B)
1	C34 20DB/LB (MTC)	COMMON DOOR DRIVER (B)
2	C35 20LB/OR	MODE DOOR DRIVER (A)

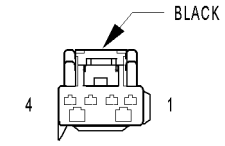

MULTI-FUNCTION SWITCH

MULTI-FUNCTION SWITCH - BLACK 4 WAY

CAV	CIRCUIT	FUNCTION
1	W52 22BR/YL	FRONT WIPER SWITCH MUX
2	G902 22VT/LB	MULTI-FUNCTION SWITCH MUX RETURN
3	L305 20WT/LB	TURN SIGNAL SWITCH MUX
4	G194 22VT/LG	HIGH BEAM/FRONT WASHER SWITCH MUX

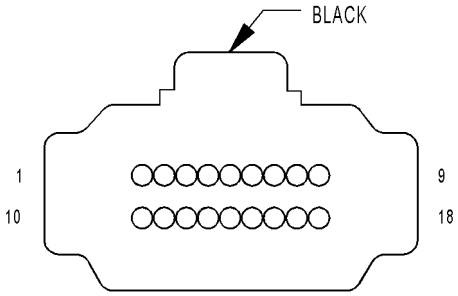

OCCUPANT CLASSIFICATION MODULE

OCCUPANT CLASSIFICATION MODULE - BLACK 18 WAY

CAV	CIRCUIT	FUNCTION
1	-	-
2	-	-
3	-	-
4	D105 20LG/LB	BELT TENSION SENSOR SIGNAL
5	Z104 20BK/LG	GROUND
6	R741 20LG/VT	PASSENGER BLADDER PRESSURE SENSOR SIGNAL
7	R740 20LG/OR	PASSENGER BLADDER PRESSURE SENSOR POWER
8	D25 20WT/VT	PCI BUS
9	F201 20PK/OR	ORC RUN-START DRIVER
10	-	-
11	-	-
12	-	-
13	-	-
14	R986 20LG/BR	BELT TENSION SENSOR GROUND
15	R941 20LG/DG	PASSENGER BLADDER PRESSURE SENSOR GROUND
16	R86 20LG/LB	BELT TENSION SENSOR FEED
17	-	-
18	-	-

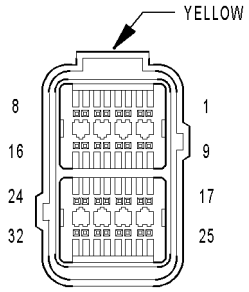

OCCUPANT RESTRAINT CONTROLLER C1

OCCUPANT RESTRAINT CONTROLLER C1 - YELLOW 32 WAY

CAV	CIRCUIT	FUNCTION
1	R53 20LG/YL	DRIVER SEAT BELT TENSIONER LINE 2
2	R55 20LG/DG	DRIVER SEAT BELT TENSIONER LINE 1
3	R56 20LB/DG (EXCEPT OCCUPANT SENSING)	PASSENGER SEAT BELT TENSIONER LINE 1
4	R54 20LB/YL (EXCEPT OCCUPANT SENSING)	PASSENGER SEAT BELT TENSIONER LINE 2
5	-	-
6	-	-
7	R4 20OR/LB (SIDE AIRBAG/OCCUPANT SENSING)	RIGHT CURTAIN SQUIB 1 LINE 1
8	R2 20WT/LB (SIDE AIRBAG/OCCUPANT SENSING)	RIGHT CURTAIN SQUIB 1 LINE 2
9	R57 20LG/GY	DRIVER SEAT BELT SWITCH SENSE
10	R58 20LB/GY (OCCUPANT SENSING)	PASSENGER SEAT BELT SWITCH SENSE
11	R59 20LG/TN	DRIVER SEAT BELT SWITCH GROUND
12	R60 20LG/TN (OCCUPANT SENSING)	PASSENGER SEAT BELT SWITCH GROUND
13	-	-
14	-	-
15	R13 20LB (SIDE AIRBAG)	LEFT SIDE IMPACT SENSOR 1 SIGNAL
16	R16 20BR/LG (SIDE AIRBAG)	RIGHT SIDE IMPACT SENSOR 1 GROUND
17	-	-
18	-	-
19	R15 20DB (EXCEPT RHD LWB/SIDE AIRBAG)	LEFT SIDE IMPACT SENSOR 1 GROUND
19	R15 20LB (RHD LWB/SIDE AIRBAG)	LEFT SIDE IMPACT SENSOR 1 GROUND
20	R19 20LG/WT (SIDE AIRBAG)	LEFT SIDE IMPACT SENSOR 2 GROUND
21	R20 20WT/LG (SIDE AIRBAG)	RIGHT SIDE IMPACT SENSOR 2 GROUND
22	R17 20LG (SIDE AIRBAG)	LEFT SIDE IMPACT SENSOR 2 SIGNAL
23	R18 20LB (SIDE AIRBAG)	RIGHT SIDE IMPACT SENSOR 2 SIGNAL
24	R14 20TN/LG (SIDE AIRBAG)	RIGHT SIDE IMPACT SENSOR 1 SIGNAL
25	R1 20LB/WT (SIDE AIRBAG)	LEFT CURTAIN SQUIB 1 LINE 2
26	R3 20LB/OR (SIDE AIRBAG)	LEFT CURTAIN SQUIB 1 LINE 1
27	R4 20OR/LB (SIDE AIRBAG/EXCEPT OCCUPANT SENSING)	RIGHT CURTAIN SQUIB 1 LINE 1
28	R2 20WT/LB (SIDE AIRBAG/EXCEPT OCCUPANT SENSING)	RIGHT CURTAIN SQUIB 1 LINE 2
29	-	-
30	-	-
31	R56 20LB/DG (OCCUPANT SENSING)	PASSENGER SEAT BELT TENSIONER LINE 1
32	R54 20LB/YL (OCCUPANT SENSING)	PASSENGER SEAT BELT TENSIONER LINE 2

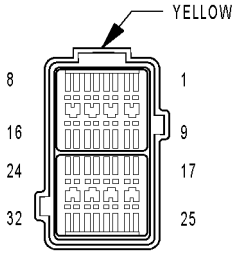

OCCUPANT RESTRAINT CONTROLLER C2

OCCUPANT RESTRAINT CONTROLLER C2 - YELLOW 32 WAY

CAV	CIRCUIT	FUNCTION
1	R43 20LG/BR	DRIVER SQUIB 1 LINE 2
2	R45 20LG/OR	DRIVER SQUIB 1 LINE 1
3	R63 20LG/WT	DRIVER SQUIB 2 LINE 1
4	R61 20LG/VT (EXCEPT EXPORT)	DRIVER SQUIB 2 LINE 2
4	R61 20LB/VT (EXPORT)	DRIVER SQUIB 2 LINE 1
5	R9 20LB/YL (LHD)	DRIVER KNEE BLOCKER SQUIB LINE 1
6	R11 20LB/DB (LHD)	DRIVER KNEE BLOCKER SQUIB LINE 2
7	-	-
8	-	-
9	G104 20VT/GY (OCCUPANT SENSING)	PASSENGER AIRBAG ON/OFF INDICATOR LAMP GROUND
10	R22 20WT/LB (SIDE AIR-BAG)	RIGHT SIDE IMPACT SENSOR 3 SIGNAL
11	-	-
12	R82 20WT/LB	RIGHT FRONT IMPACT SENSOR GROUND
13	-	-
14	R23 20LB/YL (SIDE AIR-BAG)	LEFT SIDE IMPACT SENSOR 3 GROUND
15	D25 20WT/VT	PCI BUS
16	F201 20PK/OR	ORC RUN-START DRIVER
17	-	-
18	-	-
19	R24 20YL/LB (SIDE AIR-BAG)	RIGHT SIDE IMPACT SENSOR 3 GROUND
20	R81 20LB/WT	LEFT FRONT IMPACT SENSOR GROUND
21	-	-
22	Z12 18BK/OR	GROUND
23	-	-
24	F100 20PK/VT	ORC RUN ONLY DRIVER
25	R79 20LB/VT	LEFT FRONT IMPACT SENSOR SIGNAL
26	R80 20VT/LB	RIGHT FRONT IMPACT SENSOR SIGNAL
27	-	-
28	R21 20LB/WT (SIDE AIR-BAG)	LEFT SIDE IMPACT SENSOR 3 SIGNAL
29	R42 20LB/BR	PASSENGER SQUIB 1 LINE 2
30	R44 20LB/OR	PASSENGER SQUIB 1 LINE 1
31	R64 20LB/WT	PASSENGER SQUIB 2 LINE 1
32	R62 20LB/VT	PASSENGER SQUIB 2 LINE 2

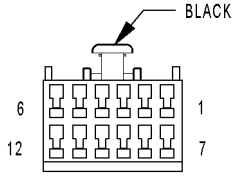

OVERHEAD CONSOLE (EXCEPT BASE)

OVERHEAD CONSOLE (EXCEPT BASE) - BLACK 12 WAY

CAV	CIRCUIT	FUNCTION
1	G23 22VT/DB	SLIDING DOORS OVERHEAD SWITCH MUX
2	G25 22VT/TN	LIFTGATE SWITCH MUX
3	D25 20WT/VT	PCI BUS
4	Z113 20BK/DB	GROUND
5	A114 20GY/RD	FUSED B(+) (I.O.D.)
6	F503 20WT/PK	FUSED IGNITION SWITCH OUTPUT (RUN)
7	Z13 20BK/WT	GROUND
8	E15 20OR/DB	ASH/RECEIVER LAMP FEED
9	-	-
10	-	-
11	L24 20BK/GY (EXCEPT EXPORT/PREMIUM/ LUXURY)	AUTOMATIC HEADLAMP SWITCH SENSOR
12	L1 20BK/WT (PREMIUM/ LUXURY)	BACK-UP LAMP FEED

CONNECTOR NOT AVAILABLE

PARK ASSIST DISPLAY - 3 WAY

CAV	CIRCUIT	FUNCTION
1	X777 20DG/GY	PARK ASSIST DISPLAY SUPPLY
2	Z171 20GY/BK	GROUND
3	D777 20WT/GY	PARK ASSIST DISPLAY SIGNAL

CONNECTOR NOT AVAILABLE

PARK ASSIST MODULE - 18 WAY

CAV	CIRCUIT	FUNCTION
1	X700 20GY/OR	PARK ASSIST SENSOR SUPPLY
2	D703 20WT/OR	PARK ASSIST SENSOR NO. 3 SIGNAL
3	D704 20WT/DB	PARK ASSIST SENSOR NO. 4 SIGNAL
4	X777 20DG/GY	PARK ASSIST DISPLAY SUPPLY
5	D777 20WT/GY	PARK ASSIST DISPLAY SIGNAL
6	Z171 20GY/BK	GROUND
7	-	-
8	-	-
9	-	-
10	F20 20PK/WT	FUSED IGNITION SWITCH OUTPUT (RUN-START)
11	Z177 20DG/BK	GROUND
12	D25 20WT/VT	PCI BUS
13	-	-
14	-	-
15	-	-
16	D700 20WT/GY	PARK ASSIST SENSOR NO. 1 SIGNAL
17	D701 20WT/LB	PARK ASSIST SENSOR NO. 2 SIGNAL
18	X750 20GY/LB	PARK ASSIST SENSOR GROUND

CONNECTOR NOT AVAILABLE

PARK ASSIST SENSOR NO. 1 - 3 WAY

CAV	CIRCUIT	FUNCTION
1	D700 20WT/GY	PARK ASSIST SENSOR NO. 1 SIGNAL
2	X750 20GY/LB	PARK ASSIST SENSOR GROUND
3	X700 20GY/OR	PARK ASSIST SENSOR SUPPLY

CONNECTOR NOT AVAILABLE

PARK ASSIST SENSOR NO. 2 - 3 WAY

CAV	CIRCUIT	FUNCTION
1	D701 20WT/LB	PARK ASSIST SENSOR NO. 2 SIGNAL
2	X750 20GY/LB	PARK ASSIST SENSOR GROUND
3	X700 20GY/OR	PARK ASSIST SENSOR SUPPLY

CONNECTOR NOT AVAILABLE

PARK ASSIST SENSOR NO. 3 - 3 WAY

CAV	CIRCUIT	FUNCTION
1	D703 20WT/BK	PARK ASSIST SENSOR NO. 3 SIGNAL
2	X750 20GY/LB	PARK ASSIST SENSOR GROUND
3	X700 20GY/OR	PARK ASSIST SENSOR SUPPLY

CONNECTOR NOT AVAILABLE

PARK ASSIST SENSOR NO. 4 - 3 WAY

CAV	CIRCUIT	FUNCTION
1	D704 20WT/DB	PARK ASSIST SENSOR NO. 4 SIGNAL
2	X750 20GY/LB	PARK ASSIST SENSOR GROUND
3	X700 20GY/OR	PARK ASSIST SENSOR SUPPLY

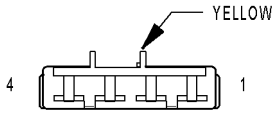

PASSENGER AIRBAG

PASSENGER AIRBAG - YELLOW 4 WAY

CAV	CIRCUIT	FUNCTION
1	R42 20LB/BR	PASSENGER SQUIB 1 LINE 2
2	R44 20LB/OR	PASSENGER SQUIB 1 LINE 1
3	R62 20LB/VT	PASSENGER SQUIB 2 LINE 2
4	R64 20LB/WT	PASSENGER SQUIB 2 LINE 1

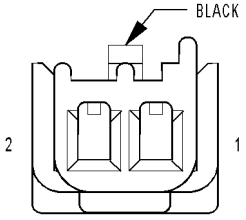

PASSENGER AIRBAG ON/OFF INDICATOR LAMP

PASSENGER AIRBAG ON/OFF INDICATOR LAMP - BLACK 2 WAY

CAV	CIRCUIT	FUNCTION
1	F201 20PK/OR	ORC RUN-START DRIVER
2	G104 20VT/GY	PASSENGER AIRBAG ON/OFF INDICATOR LAMP GROUND

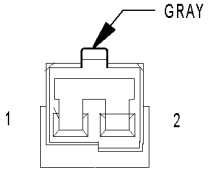

PASSENGER BLEND DOOR ACTUATOR

PASSENGER BLEND DOOR ACTUATOR - GRAY 2 WAY

CAV	CIRCUIT	FUNCTION
1	C133 20DB/WT (ATC)	PASSENGER BLEND DOOR DRIVER (B)
1	C34 20DB/LB (LHD MTC)	COMMON DOOR DRIVER (B)
1	C33 20LB/BR (RHD MTC)	PASSENGER BLEND DOOR DRIVER (A)
2	C33 20LB/BR (ATC/LHD MTC)	PASSENGER BLEND DOOR DRIVER (A)
2	C34 20DB/LB (RHD MTC)	COMMON DOOR DRIVER (B)

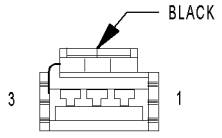

PASSENGER DOOR LOCK SWITCH

PASSENGER DOOR LOCK SWITCH - BLACK 3 WAY

CAV	CIRCUIT	FUNCTION
1	-	-
2	G160 20VT/LG (LHD)	RIGHT DOOR LOCK SWITCH MUX
2	G161 20VT/DG (RHD)	LEFT DOOR LOCK SWITCH MUX
3	Z460 20BK/LG (LHD)	GROUND
3	Z461 20BK/DG (RHD)	GROUND

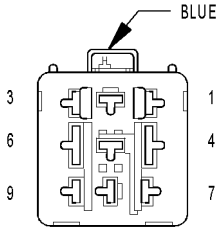

PASSENGER FOLDING MIRROR RELAY (EXPORT)

PASSENGER FOLDING MIRROR RELAY (EXPORT) - BLUE 9 WAY

CAV	CIRCUIT	FUNCTION
1	-	-
2	-	-
3	-	-
4	A108 20LG/RD	FUSED B(+)
5	P164 18LG/DB	PASSENGER FOLDING MIRROR RELAY INPUT
6	P162 18LG/DG	PASSENGER FOLDING MIRROR RELAY CONTROL
7	-	-
8	P160 18TN/LG	PASSENGER FOLDING MIRROR RELAY OUTPUT
9	-	-

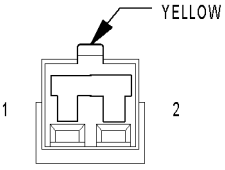

PASSENGER SEAT BELT SWITCH (OCCUPANT SENSING)

PASSENGER SEAT BELT SWITCH (OCCUPANT SENSING) - YELLOW 2 WAY

CAV	CIRCUIT	FUNCTION
1	R58 16LB/GY	PASSENGER SEAT BELT SWITCH SENSE
2	R60 16LB/TN	PASSENGER SEAT BELT SWITCH GROUND

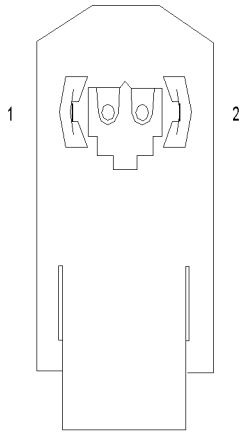

PASSENGER SEAT BELT TENSIONER

PASSENGER SEAT BELT TENSIONER - 2 WAY

CAV	CIRCUIT	FUNCTION
1	R56 18LB/DG (EXCEPT EXPORT)	PASSENGER SEAT BELT TENSIONER LINE 1
1	R54 18LB/YL (EXPORT)	PASSENGER SEAT BELT TENSIONER LINE 2
2	R54 18LB/YL (EXCEPT EXPORT)	PASSENGER SEAT BELT TENSIONER LINE 2
2	R56 18LB/DG (EXPORT)	PASSENGER SEAT BELT TENSIONER LINE 1

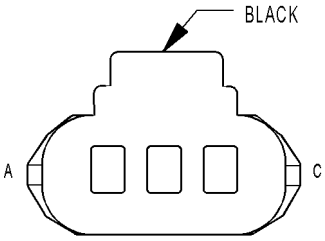

PASSENGER SEAT WEIGHT SENSOR

PASSENGER SEAT WEIGHT SENSOR - BLACK 3 WAY

CAV	CIRCUIT	FUNCTION
A	R941 20LG/DG	PASSENGER BLADDER PRESSURE SENSOR GROUND
B	R741 20LG/VT	PASSENGER BLADDER PRESSURE SENSOR SIGNAL
C	R740 20LG/OR	PASSENGER BLADDER PRESSURE SENSOR POWER

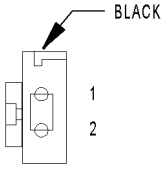

POWER FOLDING MIRROR SWITCH (EXPORT)

POWER FOLDING MIRROR SWITCH (EXPORT) - BLACK 2 WAY

CAV	CIRCUIT	FUNCTION
1	P136 20TN/YL	FOLDING MIRROR SWITCH SENSE
2	Z888 20BK/YL	GROUND

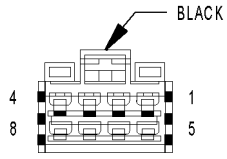

POWER LIFTGATE MODULE C1

POWER LIFTGATE MODULE C1 - BLACK 8 WAY

CAV	CIRCUIT	FUNCTION
1	Q83 18OR/GY	LIFTGATE LATCH CLUTCH DRIVER
2	Q88 16TN/BR	LIFTGATE OPEN DRIVER
3	Q89 16TN/OR	LIFTGATE CLOSE DRIVER
4	-	-
5	A115 12YL/RD	FUSED B(+)
6	-	-
7	-	-
8	Z125 14BK/WT	GROUND

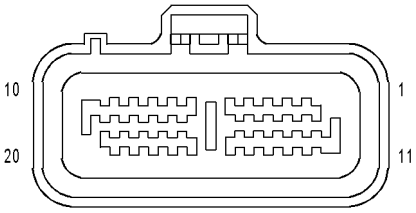

POWER LIFTGATE MODULE C2

POWER LIFTGATE MODULE C2 - 20 WAY

CAV	CIRCUIT	FUNCTION
1	Q90 20TN/VT	LIFTGATE HALL EFFECT SUPPLY
2	-	-
3	Q151 22TN/DB (EXCEPT EXPORT)	LIFTGATE ENGAGE/DISENGAGE SWITCH SENSE
3	Q151 20TN/DB (EXPORT)	LIFTGATE ENGAGE/DISENGAGE SWITCH SENSE
4	-	-
5	Q76 22OR/LB	PINCH SENSOR SIGNAL
6	-	-
7	Q86 18OR/DB	LIFTGATE GEAR ENGAGE DRIVER
8	Q84 18TN/GY	LIFTGATE LATCH CINCH DRIVER
9	Q85 18TN/WT	LIFTGATE LATCH RELEASE DRIVER
10	Q87 18OR/LG	LIFTGATE GEAR DISENGAGE DRIVER
11	D25 20WT/VT	PCI BUS
12	G78 20VT/OR	LIFTGATE AJAR SWITCH SENSE
13	Q60 22OR/YL	LIFTGATE PAWL SWITCH SENSE
14	Q51 22OR	LIFTGATE FULL OPEN SWITCH SENSE
15	-	-
16	G32 20VT/LB	LIFTGATE TEMPERATURE SENSOR SIGNAL
17	Q91 20TN/YL	LIFTGATE HALL EFFECT SIGNAL
18	Q94 22TN/LG	LIFTGATE CHIME DRIVER
19	G153 20VT/DG	LIFTGATE MODULE WAKE UP SIGNAL
20	Z87 20BK/LG	GROUND

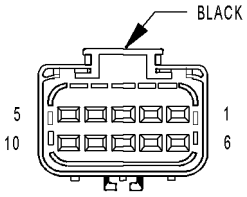

POWER LIFTGATE MOTOR

POWER LIFTGATE MOTOR - BLACK 10 WAY

CAV	CIRCUIT	FUNCTION
1	Z87 20BK/LG	GROUND
2	Q51 22OR	LIFTGATE FULL OPEN SWITCH SENSE
3	Q151 22TN/DB (EXCEPT EXPORT)	LIFTGATE ENGAGE/DISENGAGE SWITCH SENSE
3	Q151 20TN/DB (EXPORT)	LIFTGATE ENGAGE/DISENGAGE SWITCH SENSE
4	Q87 18OR/LG	LIFTGATE GEAR DISENGAGE DRIVER
5	Q86 18OR/DB	LIFTGATE GEAR ENGAGE DRIVER
6	Q88 16TN/BR	LIFTGATE OPEN DRIVER
7	Q90 20TN/VT	LIFTGATE HALL EFFECT SUPPLY
8	Q91 20TN/YL	LIFTGATE HALL EFFECT SIGNAL
9	Z87 20BK/LG	GROUND
10	Q89 16TN/OR	LIFTGATE CLOSE DRIVER

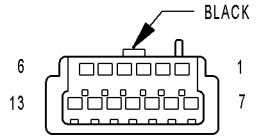

POWER MIRROR SWITCH

POWER MIRROR SWITCH - BLACK 13 WAY

CAV	CIRCUIT	FUNCTION
1	P70 20TN/LB	RIGHT MIRROR COMMON DRIVER (RIGHT/DOWN)
1	P70 20TN/LB (MEMORY)	RIGHT MIRROR COMMON DRIVER (RIGHT/DOWN)
2	-	-
3	-	-
4	-	-
5	-	-
6	P73 20TN/YL	LEFT MIRROR COMMON DRIVER (RIGHT/DOWN)
6	P73 20TN/YL (MEMORY)	LEFT MIRROR COMMON DRIVER (RIGHT/DOWN)
7	P75 20TN/LG	LEFT MIRROR LEFT DRIVER
7	P75 20TN/LG (MEMORY)	LEFT MIRROR LEFT DRIVER
8	P74 20TN/DB	RIGHT MIRROR LEFT DRIVER
8	P74 20TN/DB (MEMORY)	RIGHT MIRROR LEFT DRIVER
9	A108 20LG/RD	FUSED B(+)
10	-	-
11	Z408 18BK/LG	GROUND
12	P71 20TN/DG	LEFT MIRROR UP DRIVER
12	P71 20TN/DG (MEMORY)	LEFT MIRROR UP DRIVER
13	P72 20TN/GY	RIGHT MIRROR UP DRIVER
13	P72 20TN/GY (MEMORY)	RIGHT MIRROR UP DRIVER

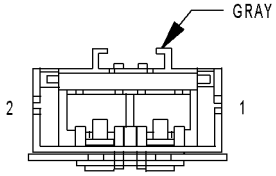

POWER SEAT CIRCUIT BREAKER (30A)

POWER SEAT CIRCUIT BREAKER (30A) - GRAY 2 WAY

CAV	CIRCUIT	FUNCTION
1	A110 12OR/RD	FUSED B(+)
2	A210 14OR/RD	FUSED SEAT SWITCH DRIVER
2	A210 14OR/RD	FUSED SEAT SWITCH DRIVER

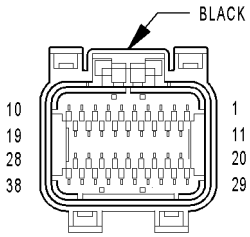

POWERTRAIN CONTROL MODULE C1

POWERTRAIN CONTROL MODULE C1 - BLACK 38 WAY

CAV	CIRCUIT	FUNCTION
1	-	-
2	-	-
3	-	-
4	-	-
5	-	-
6	-	-
7	-	-
8	-	-
9	Z130 18BK/BR	GROUND
10	-	-
11	F202 20PK/GY	FUSED IGNITION SWITCH OUTPUT (RUN-START)
12	F1 18PK/WT (EATX)	FCM OUTPUT (UNLOCK-RUN-START)
13	N7 18DB/OR (MTX)	VEHICLE SPEED SENSOR SIGNAL
14	-	-
15	-	-
16	-	-
17	-	-
18	Z131 18BK/DG	GROUND
19	-	-
20	G6 16VT/GY	ENGINE OIL PRESSURE SENSOR SIGNAL
21	-	-
22	G31 18VT/LG	AAT SIGNAL
23	-	-
24	-	-
25	D20 20WT/LG	SCI RECEIVE (PCM)
26	D123 20WT/BR (2.4L EATX)	SCI RECEIVE (TCM)
26	D123 20WT/OR (3.3L/3.8L)	SCI RECEIVE (TCM)
27	-	-
28	-	-
29	A109 18OR/RD	FUSED B(+)
30	T751 18YL	FUSED IGNITION SWITCH OUTPUT (START)
31	K141 18DB/YL	O2 1/2 SIGNAL
32	K904 18DB/DG (2.4L)	O2 RETURN (DOWN)
32	K904 18BR/DG (3.3L/3.8L)	O2 RETURN (DOWN)
33	-	-
34	-	-
35	-	-
36	D21 20WT/DG (2.4L)	SCI TRANSMIT (PCM)
36	D21 20WT/BR (3.3L/3.8L)	SCI TRANSMIT (PCM)
37	D15 18DG/YL (EATX)	SCI TRANSMIT (TCM)
38	D25 18WT/VT	PCI BUS

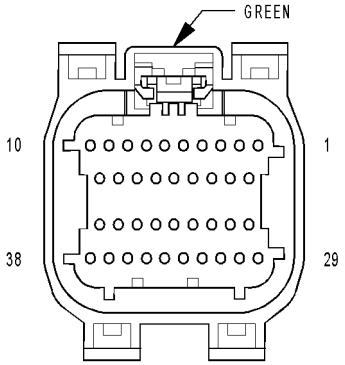

POWERTRAIN CONTROL MODULE C4

POWERTRAIN CONTROL MODULE C4 - GREEN 38 WAY

CAV	CIRCUIT	FUNCTION
1	T60 18YL/GY	OVERDRIVE SOLENOID CONTROL
2	T59 18DB/LB	UNDERDRIVE SOLENOID CONTROL
3	-	-
4	-	-
5	-	-
6	T19 18YL/DB	2-4 SOLENOID CONTROL
7	-	-
8	-	-
9	-	-
10	T20 18DG/WT	LOW/REVERSE SOLENOID CONTROL
11	-	-
12	-	-
13	Z133 16BK/LG	GROUND
14	Z133 16BK/LG	GROUND
15	T1 18DG/LB	TRS T1 SENSE
16	T3 18DG/DB	TRS T3 SENSE
17	-	-
18	T15 18YL/BR	TRANSMISSION CONTROL RELAY CONTROL
19	T16 18YL/OR	TRANSMISSION CONTROL RELAY OUTPUT
20	-	-
21	-	-
22	T9 18DG/TN	OVERDRIVE PRESSURE SWITCH SENSE
23	-	-
24	-	-
25	-	-
26	-	-
27	T41 18DG/GY	TRS T41 SENSE
28	T16 18YL/OR	TRANSMISSION CONTROL RELAY OUTPUT
29	T50 18YL/TN	LOW/REVERSE PRESSURE SWITCH SENSE
30	T47 18YL/DG	2-4 PRESSURE SWITCH SENSE
31	-	-
32	T14 18DG/BR	OUTPUT SPEED SENSOR SIGNAL
33	T52 18DG/WT	INPUT SPEED SENSOR SIGNAL
34	T13 18DG/VT	SPEED SENSOR GROUND
35	T54 18DG/OR	TRANSMISSION TEMPERATURE SENSOR SIGNAL
36	-	-
37	T42 18DG/YL	TRS T42 SENSE
38	T16 18YL/OR	TRANSMISSION CONTROL RELAY OUTPUT

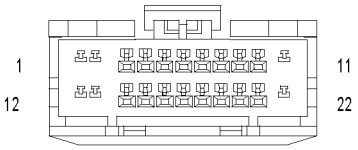

RADIO C1

RADIO C1 - 22 WAY

CAV	CIRCUIT	FUNCTION
1	A114 16GY/RD	FUSED B(+) (I.O.D.)
2	F306 18DB/PK	FUSED ACCESSORY RELAY OUTPUT
3	E14 20OR/TN	PANEL LAMPS DRIVER
4	-	-
5	-	-
6	-	-
7	X54 20GY (LOWLINE)	RIGHT FRONT SPEAKER (+)
8	X56 20GY/BR (LOWLINE)	RIGHT FRONT SPEAKER (-)
9	X55 20DG/BR (LOWLINE)	LEFT FRONT SPEAKER (-)
10	X53 20DG (LOWLINE)	LEFT FRONT SPEAKER (+)
11	Z514 16BK/LG	GROUND
12	A114 16GY/RD	FUSED B(+) (I.O.D.)
13	X60 20GY/YL (EXPORT)	RADIO 12 VOLT OUTPUT
14	D25 20WT/VT	PCI BUS
15	-	-
16	-	-
17	-	-
18	X51 22DG/DB	LEFT REAR SPEAKER (+)
19	X57 22DG/OR	LEFT REAR SPEAKER (-)
20	X58 22GY/OR	RIGHT REAR SPEAKER (-)
21	X52 22GY/DB	RIGHT REAR SPEAKER (+)
22	Z515 16BK	GROUND

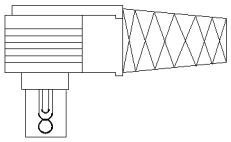

RADIO C2
(CD CHANGER)

RADIO C2 (CD CHANGER) - 10 WAY

CAV	CIRCUIT	FUNCTION
1	X40 22GY/WT (EXCEPT EXPORT)	AUDIO OUT RIGHT
1	X40 20GY/WT (EXPORT)	AUDIO OUT RIGHT
2	X140 22GY/OR (EXCEPT EXPORT)	COMMON AUDIO
2	Z140 18BK/OR (EXPORT)	GROUND
3	X235 20GY/LB (EXCEPT EXPORT)	SHIELD
4	D25 20WT/VT (EXCEPT EXPORT)	PCI BUS
4	D25 20VT/YL (EXPORT)	PCI BUS
5	X112 20DG/GY (EXCEPT EXPORT)	IGNITION SWITCH SIGNAL
5	X112 20RD (EXPORT)	IGNITION SWITCH SIGNAL
6	X41 22DG/WT (EXCEPT EXPORT)	AUDIO OUT LEFT
6	X41 20DG/WT (EXPORT)	AUDIO OUT LEFT
7	Z141 20BK/TN (EXCEPT EXPORT)	GROUND
7	Z141 18BK/TN (EXPORT)	GROUND
8	-	-
9	E14 22OR/TN (EXCEPT EXPORT)	PANEL LAMPS DRIVER
9	E14 18OR/TN (EXPORT)	PANEL LAMPS DRIVER
10	X160 20GY/YL	FUSED B(+)

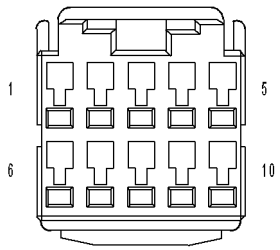

RADIO C2 (HANDS FREE)

RADIO C2 (HANDS FREE) - 10 WAY

CAV	CIRCUIT	FUNCTION
1	X704 22GY/WT	RIGHT AUDIO OUTPUT
2	X795 22GY/OR	AUDIO GROUND
3	X207 20GY/LB (CD CHANGER)	SHIELD
3	X955 22 (DVD/CD CHANGER)	SHIELD
4	D25 20WT/VT	PCI BUS
5	X112 20DG/GY	IGNITION RUN/ACC SIGNAL
6	X703 22DG/WT	LEFT AUDIO OUTPUT
7	Z141 20BK/TN	GROUND
8	-	-
9	E14 22OR/TN	PANEL LAMPS DRIVER
10	X160 20GY/YL	FUSED B(+)

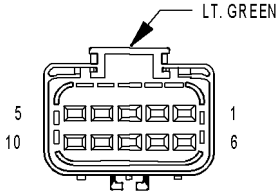

REAR A/C-HEATER UNIT (3 ZONE MTC)

REAR A/C-HEATER UNIT (3 ZONE MTC) - LT. GREEN 10 WAY

CAV	CIRCUIT	FUNCTION
1	C53 20LB	REAR MODE DOOR DRIVER
2	C154 20LB/OR	REAR COMMON DOOR DRIVER
3	C51 12LB/BR	FUSED REAR BLOWER MOTOR RELAY OUTPUT
4	C152 16LB/LG	REAR BLOWER MOTOR MED
5	C151 18LB/DG	REAR BLOWER MOTOR LOW
6	C153 12DB/BR	REAR BLOWER MOTOR HIGH
7	C54 20LB/YL	REAR BLEND DOOR DRIVER
8	C154 20LB/OR	REAR COMMON DOOR DRIVER
9	-	-
10	-	-

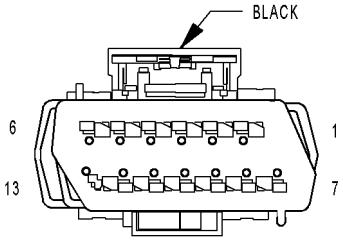

REAR AUTO TEMP CONTROL SWITCH (3 ZONE ATC)

REAR AUTO TEMP CONTROL SWITCH (3 ZONE ATC) - BLACK 13 WAY

CAV	CIRCUIT	FUNCTION
1	F504 20GY/PK	FUSED IGNITION SWITCH OUTPUT (RUN)
2	Z27 18BK/DG	GROUND
3	D22 22WT/TN	KDB CLOCK
4	D17 22WT/DG	KDB DATA
5	E10 20OR/DG	PANEL LAMPS DRIVER
6	-	-
7	-	-
8	-	-
9	-	-
10	-	-
11	-	-
12	-	-
13	-	-

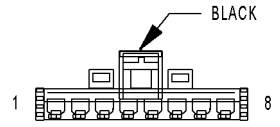

REAR BLOWER FRONT CONTROL SWITCH (3 ZONE MTC)

REAR BLOWER FRONT CONTROL SWITCH (3 ZONE MTC) - BLACK 8 WAY

CAV	CIRCUIT	FUNCTION
1	-	-
2	Z440 12BK/DG	GROUND
3	-	-
4	C153 12DB/BR	REAR BLOWER MOTOR HIGH
5	-	-
6	C152 16LB/LG	REAR BLOWER MOTOR MED
7	C151 18LB/DG	REAR BLOWER MOTOR LOW
8	C50 12DB/OR	REAR BLOWER FRONT CONTROL FEED

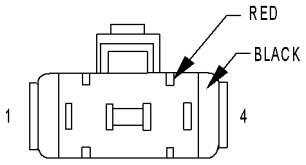

REAR BLOWER MOTOR POWER MODULE C1 (3 ZONE ATC)

REAR BLOWER MOTOR POWER MODULE C1 (3 ZONE ATC) - RED/BLACK 4 WAY

CAV	CIRCUIT	FUNCTION
1	C51 12DB/BR	FUSED REAR BLOWER MOTOR RELAY OUTPUT
2	C59 18DB/LB	BLOWER MOTOR CONTROL
3	Z135 12BK/LB	GROUND
4	-	-

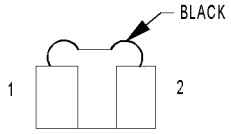

REAR BLOWER MOTOR POWER MODULE C2 (3 ZONE ATC)

REAR BLOWER MOTOR POWER MODULE C2 (3 ZONE ATC) - BLACK 2 WAY

CAV	CIRCUIT	FUNCTION
1	12BK	GROUND
2	12DG	POWER FEED

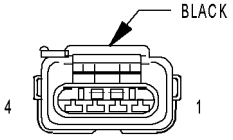

REAR BLOWER REAR CONTROL SWITCH C1 (3 ZONE MTC)

REAR BLOWER REAR CONTROL SWITCH C1 (3 ZONE MTC) - BLACK 4 WAY

CAV	CIRCUIT	FUNCTION
1	C153 12DB/BR	REAR BLOWER MOTOR HIGH
2	C152 16LB/LG	REAR BLOWER MOTOR MED
3	C151 18LB/DG	REAR BLOWER MOTOR LOW
4	C50 12DB/OR	REAR BLOWER FRONT CONTROL FEED

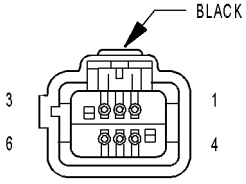

REAR BLOWER REAR CONTROL SWITCH C2 (3 ZONE MTC)

REAR BLOWER REAR CONTROL SWITCH C2 (3 ZONE MTC) - BLACK 6 WAY

CAV	CIRCUIT	FUNCTION
1	-	-
2	C22 20LB/DB	REAR TEMPERATURE FEEDBACK SIGNAL
3	E10 20OR/DG	PANEL LAMPS DRIVER
4	F850 20LB/PK	5 VOLT SUPPLY
5	C121 20DB/DG	REAR TEMPERATURE RETURN
6	Z409 20BK/OR	GROUND

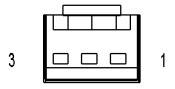

REAR INTRUSION SENSOR (UNITED KINGDOM)

REAR INTRUSION SENSOR (UNITED KINGDOM) - 3 WAY

CAV	CIRCUIT	FUNCTION
1	A645 20RD/VT	REAR INTRUSION SENSOR SIGNAL
2	-	-
3	G945 20VT/DG	SENSOR GROUND

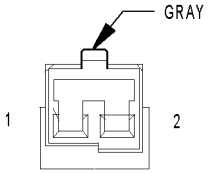

REAR MODE MOTOR (3 ZONE ATC)

REAR MODE MOTOR (3 ZONE ATC) - GRAY 2 WAY

CAV	CIRCUIT	FUNCTION
1	C154 18LB/GY	REAR MODE DOOR DRIVER (B)
2	C53 18LB	REAR MODE DOOR DRIVER (A)

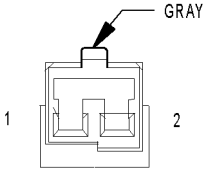

REAR TEMPERATURE MOTOR (3 ZONE ATC)

REAR TEMPERATURE MOTOR (3 ZONE ATC) - GRAY 2 WAY

CAV	CIRCUIT	FUNCTION
1	C54 18LB/YL	REAR BLEND DOOR DRIVER (A)
2	C169 18LB/TN	REAR BLEND DOOR DRIVER (B)

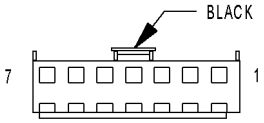

REAR VIEW MIRROR C1 (LUXURY)

REAR VIEW MIRROR C1 (LUXURY) - BLACK 7 WAY

CAV	CIRCUIT	FUNCTION
1	F503 20BK/PK (EXCEPT HANDS FREE)	FUSED IGNITION SWITCH OUTPUT (RUN)
1	X793 20DB (HANDS FREE)	IGNITION RUN/ACC SIGNAL
2	Z113 20BK (EXCEPT HANDS FREE)	GROUND
2	Z530 18GY/BK (HANDS FREE)	GROUND
3	L1 20BK/WT	BACK-UP LAMP FEED
4	P112 22BK/OR (EXCEPT HANDS FREE)	MIRROR B(+)
5	P114 22BK/LB (EXCEPT HANDS FREE)	MIRROR B(-)
6	-	-
7	L24 20BK/GY (EXCEPT HANDS FREE)	AUTOMATIC HEADLAMP SWITCH SENSOR

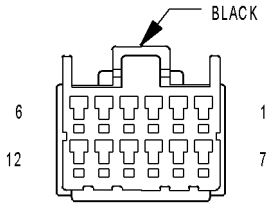

REAR VIEW MIRROR C2 (HANDS FREE)

REAR VIEW MIRROR C2 (HANDS FREE) - BLACK 12 WAY

CAV	CIRCUIT	FUNCTION
1	-	-
2	-	-
3	-	-
4	X722 20BK/LB	MICROPHONE 2 IN (+)
5	-	-
6	X712 20BK/GY	MICROPHONE 1 IN (+)
7	X793 20DB	IGNITION RUN/ACC SIGNAL
8	-	-
9	X730 20BK/VT	VOICE RECOGNITION/PHONE SWITCH SIGNAL
10	-	-
11	X835 20BK	SENSOR GROUND
12	X792 20BK/WT	MICROPHONE IN (-)

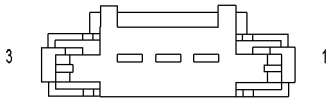

REAR WIPER MOTOR

REAR WIPER MOTOR - 3 WAY

CAV	CIRCUIT	FUNCTION
1	W13 18BR/LG	REAR WIPER MOTOR CONTROL
2	F302 18GY/PK	FUSED ACCESSORY RELAY OUTPUT
3	Z213 18BK/LG	GROUND

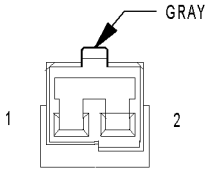

RECIRCULATION DOOR ACTUATOR

RECIRCULATION DOOR ACTUATOR - GRAY 2 WAY

CAV	CIRCUIT	FUNCTION
1	C132 20DB/YL (ATC)	RECIRCULATION DOOR DRIVER (B)
1	C34 20DB/LB (LHD)	COMMON DOOR DRIVER (B)
1	C32 20DB/TN (RHD)	RECIRCULATION DOOR DRIVER (A)
2	C32 20DB/TN (ATC)	RECIRCULATION DOOR DRIVER (A)
2	C32 20DB/TN (LHD)	RECIRCULATION DOOR DRIVER (A)
2	C34 20DB/LB (RHD)	COMMON DOOR DRIVER (B)

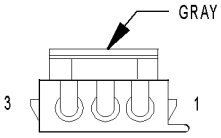

RIGHT B-PILLAR SWITCH (POWER SLIDING DOOR)

RIGHT B-PILLAR SWITCH (POWER SLIDING DOOR) - GRAY 3 WAY

CAV	CIRCUIT	FUNCTION
1	Z62 22BK/YL	GROUND
2	-	-
3	G42 22VT/YL	RIGHT SLIDING DOOR PILLAR SWITCH MUX

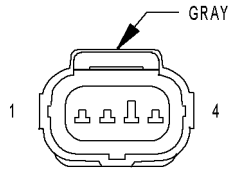

RIGHT CINCH/RELEASE MOTOR (POWER SLIDING DOOR)

RIGHT CINCH/RELEASE MOTOR (POWER SLIDING DOOR) - GRAY 4 WAY

CAV	CIRCUIT	FUNCTION
1	Q46 18TN/GY	RIGHT CINCH/RELEASE MOTOR LATCH DRIVER
2	Z248 18BK/WT	GROUND
3	Q44 18OR/GY	RIGHT CINCH/RELEASE MOTOR CLUTCH DRIVER
4	Q48 18TN/WT	RIGHT CINCH/RELEASE MOTOR UNLATCH DRIVER

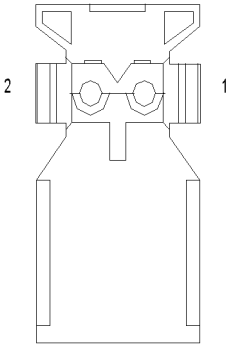

RIGHT CURTAIN AIRBAG SQUIB

RIGHT CURTAIN AIRBAG SQUIB - 2 WAY

CAV	CIRCUIT	FUNCTION
1	R2 20WT/LB	RIGHT CURTAIN SQUIB LINE 2
2	R4 20OR/LB	RIGHT CURTAIN SQUIB LINE 1

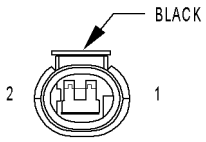

RIGHT CYLINDER LOCK SWITCH (EXPORT)

RIGHT CYLINDER LOCK SWITCH (EXPORT) - BLACK 2 WAY

CAV	CIRCUIT	FUNCTION
1	Z462 20BK/WT	GROUND
2	G162 20VT/WT	RIGHT CYLINDER LOCK SWITCH MUX

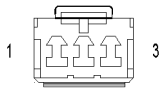

RIGHT DOOR SPEAKER

RIGHT DOOR SPEAKER - 3 WAY

CAV	CIRCUIT	FUNCTION
1	X292 18GY/BR (HIGHLINE)	AMPLIFIED RIGHT FRONT SPEAKER (-)
1	X56 20GY/BR (LOWLINE)	RIGHT FRONT SPEAKER (-)
2	-	-
3	X202 18GY (HIGHLINE)	AMPLIFIED RIGHT FRONT SPEAKER (+)
3	X54 20GY (LOWLINE)	RIGHT FRONT SPEAKER (+)

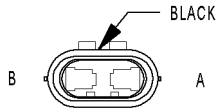

RIGHT FOG LAMP

RIGHT FOG LAMP - BLACK 2 WAY

CAV	CIRCUIT	FUNCTION
A	L90 18WT/OR	FRONT FOG LAMP RELAY OUTPUT
B	Z348 18BK/OR	GROUND

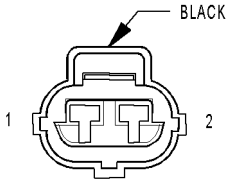

RIGHT FRONT DOOR AJAR SWITCH (BASE)

RIGHT FRONT DOOR AJAR SWITCH (BASE) - BLACK 2 WAY

CAV	CIRCUIT	FUNCTION
1	G74 20VT/WT	RIGHT FRONT DOOR AJAR SWITCH SENSE
2	Z74 20BK/WT	GROUND

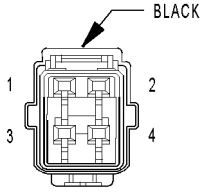

RIGHT FRONT DOOR LOCK MOTOR/AJAR SWITCH (EXCEPT BASE)

RIGHT FRONT DOOR LOCK MOTOR/AJAR SWITCH (EXCEPT BASE) - BLACK 4 WAY

CAV	CIRCUIT	FUNCTION
1	G74 20VT/WT	RIGHT FRONT DOOR AJAR SWITCH SENSE
2	Z74 20BK/WT	GROUND
3	P4 20TN/BR	RIGHT FRONT DOOR UNLOCK DRIVER
4	P2 20TN/GY	RIGHT FRONT DOOR LOCK DRIVER

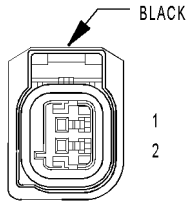

RIGHT FRONT IMPACT SENSOR

RIGHT FRONT IMPACT SENSOR - BLACK 2 WAY

CAV	CIRCUIT	FUNCTION
1	R82 18WT/LB	RIGHT FRONT IMPACT SENSOR GROUND
2	R80 18VT/LB	RIGHT FRONT IMPACT SENSOR SIGNAL

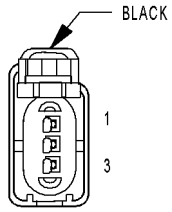

RIGHT FRONT PARK/TURN SIGNAL LAMP

RIGHT FRONT PARK/TURN SIGNAL LAMP - BLACK 3 WAY

CAV	CIRCUIT	FUNCTION
1	L60 18WT/TN	RIGHT FRONT TURN SIGNAL DRIVER
2	L78 18WT/OR	FUSED PARK LAMP RELAY OUTPUT (RIGHT)
3	Z378 18BK/TN	GROUND

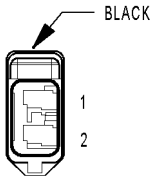

RIGHT FULL OPEN SWITCH (POWER SLIDING DOOR)

RIGHT FULL OPEN SWITCH (POWER SLIDING DOOR) - BLACK 2 WAY

CAV	CIRCUIT	FUNCTION
1	Q52 20OR	RIGHT FULL OPEN SWITCH SENSE
2	Z76 20BK/YL	GROUND

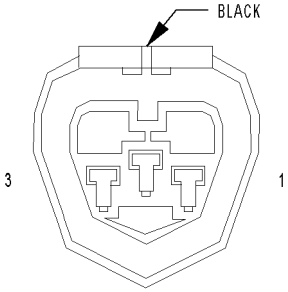

RIGHT HEADLAMP (CARAVAN/VOYAGER EXCEPT EXPORT)

RIGHT HEADLAMP (CARAVAN/VOYAGER EXCEPT EXPORT) - BLACK 3 WAY

CAV	CIRCUIT	FUNCTION
1	L44 16WT/TN	RIGHT LOW BEAM DRIVER
2	Z344 16BK/TN	GROUND
3	L34 16WT/GY	RIGHT HIGH BEAM DRIVER

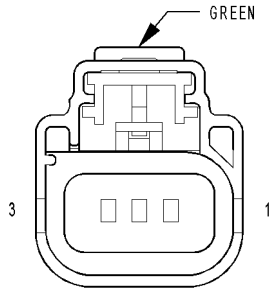

RIGHT HEADLAMP (TOWN AND COUNTRY)

RIGHT HEADLAMP (TOWN AND COUNTRY) - GREEN 3 WAY

CAV	CIRCUIT	FUNCTION
1	L44 16WT/TN	RIGHT LOW BEAM DRIVER
2	Z344 16BK/TN	GROUND
3	L34 16WT/GY	RIGHT HIGH BEAM DRIVER

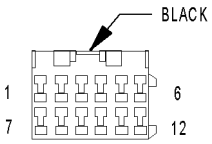

RIGHT POWER MIRROR

RIGHT POWER MIRROR - BLACK 12 WAY

CAV	CIRCUIT	FUNCTION
1	P174 20TN/LB (EXPORT)	RIGHT FOLDING MIRROR UNFOLD DRIVER
2	-	-
3	-	-
4	P68 20TN/YL (MEMORY)	RIGHT MIRROR HORIZONTAL POSITION SIGNAL
5	P66 20TN/LG (MEMORY)	RIGHT MIRROR SENSOR GROUND
6	P67 20TN/OR (MEMORY)	RIGHT MIRROR VERTICAL POSITION SIGNAL
7	P160 20TN/LG (LHD EX-PORT)	PASSENGER FOLDING MIRROR RELAY OUTPUT
7	P159 20TN/DG (RHD)	DRIVER FOLDING MIRROR FOLD DRIVER
8	Z216 20BK/DB	GROUND
9	C16 20DB/GY (HEATED MIRRORS)	FUSED DEFOGGER RELAY OUTPUT
10	P70 20TN/LB	RIGHT MIRROR COMMON DRIVER (RIGHT/DOWN)
11	P72 20TN/GY	RIGHT MIRROR UP DRIVER
12	P74 20TN/DB	RIGHT MIRROR LEFT DRIVER

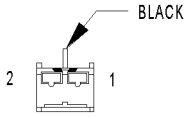

RIGHT REAR PILLAR SPEAKER (HIGHLINE AUDIO)

RIGHT REAR PILLAR SPEAKER (HIGHLINE AUDIO) - BLACK 2 WAY

CAV	CIRCUIT	FUNCTION
1	X212 18GY/DB (EXCEPT EXPORT)	AMPLIFIED RIGHT REAR TWEETER (-)
1	X212 20GY/DB (EXPORT)	AMPLIFIED RIGHT REAR TWEETER (-)
2	X282 18GY/TN (EXCEPT EXPORT)	AMPLIFIED RIGHT REAR TWEETER (+)
2	X282 20GY/TN (EXPORT)	AMPLIFIED RIGHT REAR TWEETER (+)

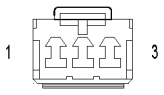

RIGHT REAR SPEAKER

RIGHT REAR SPEAKER - 3 WAY

CAV	CIRCUIT	FUNCTION
1	X296 18DG/GY (HIGHLINE EXCEPT EXPORT)	AMPLIFIED RIGHT REAR SPEAKER (-)
1	X296 20DG/GY (HIGHLINE EXPORT)	AMPLIFIED RIGHT REAR SPEAKER (-)
1	X58 20GY/OR (LOWLINE)	RIGHT REAR SPEAKER (-)
2	-	-
3	X206 18GY/DB (HIGHLINE EXCEPT EXPORT	AMPLIFIED RIGHT REAR SPEAKER (+)
3	X206 20GY/DB (HIGHLINE EXPORT)	AMPLIFIED RIGHT REAR SPEAKER (+)
3	X52 20GY/DB (LOWLINE)	RIGHT REAR SPEAKER (+)

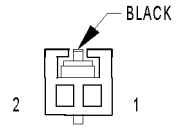

RIGHT REMOTE RADIO SWITCH

RIGHT REMOTE RADIO SWITCH - BLACK 2 WAY

CAV	CIRCUIT	FUNCTION
1	X10 22RD/DB	RADIO CONTROL MUX
2	X20 22RD/BK	RADIO CONTROL MUX RETURN

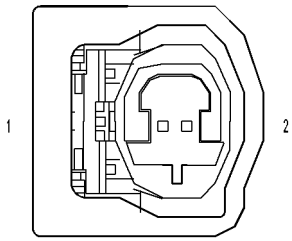

RIGHT SIDE IMPACT SENSOR 1 (EXCEPT EXPORT)

RIGHT SIDE IMPACT SENSOR 1 (EXCEPT EXPORT) - 2 WAY

CAV	CIRCUIT	FUNCTION
1	R16 20BR/LG	RIGHT SIDE IMPACT SENSOR 1 GROUND
2	R14 20TN/LG	RIGHT SIDE IMPACT SENSOR 1 SIGNAL

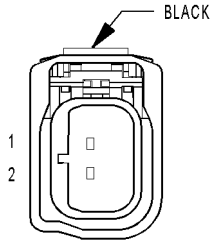

RIGHT SIDE IMPACT SENSOR 1 (EXPORT)

RIGHT SIDE IMPACT SENSOR 1 (EXPORT) - BLACK 2 WAY

CAV	CIRCUIT	FUNCTION
1	R16 20BR/LG	RIGHT SIDE IMPACT SENSOR 1 GROUND
2	R14 20TN/LG	RIGHT SIDE IMPACT SENSOR 1 SIGNAL

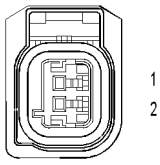

RIGHT SIDE IMPACT SENSOR 2

RIGHT SIDE IMPACT SENSOR 2 - 2 WAY

CAV	CIRCUIT	FUNCTION
1	R20 18WT/LG	RIGHT SIDE IMPACT SENSOR 2 GROUND
2	R18 18LB	RIGHT SIDE IMPACT SENSOR 2 SIGNAL

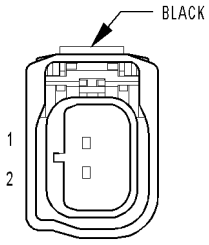

RIGHT SIDE IMPACT SENSOR 3

RIGHT SIDE IMPACT SENSOR 3 - BLACK 2 WAY

CAV	CIRCUIT	FUNCTION
1	R24 20YL/LB	RIGHT SIDE IMPACT SENSOR 3 GROUND
2	R22 20WT/LB	RIGHT SIDE IMPACT SENSOR 3 SIGNAL

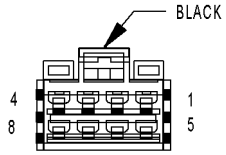

RIGHT SLIDING DOOR CONTROL MODULE C1 (POWER SLIDING DOOR)

RIGHT SLIDING DOOR CONTROL MODULE C1 (POWER SLIDING DOOR) - BLACK 8 WAY

CAV	CIRCUIT	FUNCTION
1	Q44 18OR/GY	RIGHT CINCH/RELEASE MOTOR CLUTCH DRIVER
2	Q68 16TN/BR	RIGHT SLIDING DOOR OPEN DRIVER
3	Q70 16TN/OR	RIGHT SLIDING DOOR CLOSE DRIVER
4	-	-
5	A113 14WT/RD	FUSED B(+)
6	-	-
7	-	-
8	Z124 14BK	GROUND

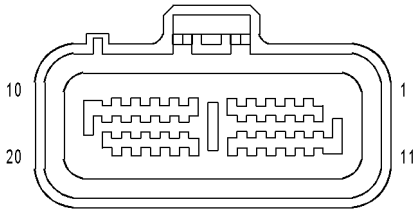

RIGHT SLIDING DOOR CONTROL MODULE C2 (POWER SLIDING DOOR)

RIGHT SLIDING DOOR CONTROL MODULE C2 (POWER SLIDING DOOR) - 20 WAY

CAV	CIRCUIT	FUNCTION
1	Q72 20TN/VT	RIGHT DOOR MOTOR HALL EFFECT SUPPLY
2	-	-
3	Q34 20OR/GY	RIGHT DOOR LOCK SENSE
4	Q54 20OR/BR	RIGHT DOOR IN/OUT HANDLE SWITCH SENSE
5	-	-
6	-	-
7	Q64 18OR/TN	RIGHT DOOR MOTOR CLUTCH DRIVER
8	Q46 18TN/GY	RIGHT CINCH/RELEASE MOTOR LATCH DRIVER
9	Q48 18TN/WT	RIGHT CINCH/RELEASE MOTOR UNLATCH DRIVER
10	-	-
11	D25 20WT/VT	PCI BUS
12	G76 20TN/OR	RIGHT SLIDING DOOR AJAR SWITCH SENSE
13	Q58 20OR/YL	RIGHT PAWL SWITCH SENSE
14	Q52 20OR	RIGHT FULL OPEN SWITCH SENSE
15	-	GROUND-DRIVER SIDE IDENTIFIER (LHD/RHD)
16	-	-
17	Q74 20TN/YL	RIGHT DOOR MOTOR HALL EFFECT SIGNAL
18	-	-
19	G152 20VT/GY	RIGHT SLIDING DOOR WAKE UP SIGNAL
20	Z26 20BK/TN	GROUND

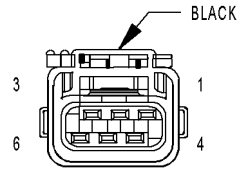

RIGHT SLIDING DOOR LATCH SENSING SWITCH (POWER SLIDING DOOR)

RIGHT SLIDING DOOR LATCH SENSING SWITCH (POWER SLIDING DOOR) - BLACK 6 WAY

CAV	CIRCUIT	FUNCTION
1	Z76 20BK/YL	GROUND
2	Q58 20OR/YL	RIGHT PAWL SWITCH SENSE
3	G76 20TN/OR	RIGHT SLIDING DOOR AJAR SWITCH SENSE
4	Z76 20BK/YL	GROUND
5	Q54 20OR/BR	RIGHT DOOR IN/OUT HANDLE SWITCH SENSE
6	-	-

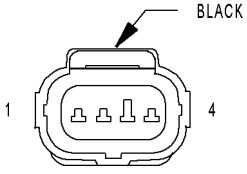

RIGHT SLIDING DOOR LOCK MOTOR (POWER SLIDING DOOR)

RIGHT SLIDING DOOR LOCK MOTOR (POWER SLIDING DOOR) - BLACK 4 WAY

CAV	CIRCUIT	FUNCTION
1	P38 20TN/DB	RIGHT SLIDING DOOR LOCK DRIVER
2	P34 20TN/LB	RIGHT SLIDING DOOR UNLOCK DRIVER
3	Q34 20OR/GY	RIGHT DOOR LOCK SENSE
4	Z76 20BK/YL	GROUND

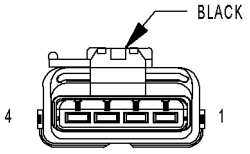

RIGHT SLIDING DOOR LOCK MOTOR/AJAR SWITCH (MANUAL SLIDING DOOR)

RIGHT SLIDING DOOR LOCK MOTOR/AJAR SWITCH (MANUAL SLIDING DOOR) - BLACK 4 WAY

CAV	CIRCUIT	FUNCTION
1	P38 20BK/DB	RIGHT SLIDING DOOR LOCK DRIVER
2	P34 20BK/TN	RIGHT SLIDING DOOR UNLOCK DRIVER
3	G76 20BK/DG	RIGHT SLIDING DOOR AJAR SWITCH SENSE
4	Z76 20BK	GROUND

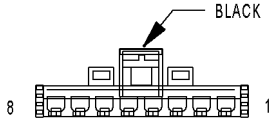

RIGHT SLIDING DOOR MOTOR (POWER SLIDING DOOR)

RIGHT SLIDING DOOR MOTOR (POWER SLIDING DOOR) - BLACK 8 WAY

CAV	CIRCUIT	FUNCTION
1	-	-
2	Q72 20TN/VT	RIGHT DOOR MOTOR HALL EFFECT SUPPLY
3	Q68 16TN/BR	RIGHT SLIDING DOOR OPEN DRIVER
4	Z164 18BK/TN	GROUND
5	Q64 18OR/TN	RIGHT DOOR MOTOR CLUTCH DRIVER
6	Q70 16TN/OR	RIGHT SLIDING DOOR CLOSE DRIVER
7	Z34 20BK/TN	GROUND
8	Q74 20TN/YL	RIGHT DOOR MOTOR HALL EFFECT SIGNAL

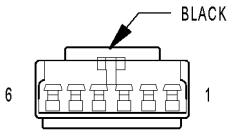

SENTRY KEY REMOTE ENTRY MODULE (SKREEM)

SENTRY KEY REMOTE ENTRY MODULE (SKREEM) - BLACK 6 WAY

CAV	CIRCUIT	FUNCTION
1	-	-
2	D25 20WT/VT	PCI BUS
3	-	-
4	F20 20PK/WT	FUSED IGNITION SWITCH OUTPUT (RUN-START)
5	Z120 22BK/WT	GROUND
6	A114 20GY/RD	FUSED B(+) (I.O.D.)

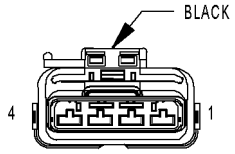

SIREN (UNITED KINGDOM)

SIREN (UNITED KINGDOM) - BLACK 4 WAY

CAV	CIRCUIT	FUNCTION
1	-	-
2	D96 18WT/LB	SIREN SIGNAL CONTROL
3	A114 18GY/RD	FUSED B(+) (I.O.D.)
4	Z109 18BK/GY	GROUND

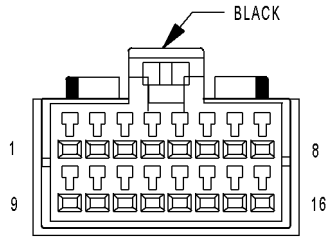

THATCHAM ALARM MODULE (UNITED KINGDOM)

THATCHAM ALARM MODULE (UNITED KINGDOM) - BLACK 16 WAY

CAV	CIRCUIT	FUNCTION
1	A645 20RD/VT	REAR INTRUSION SENSOR SIGNAL
2	G460 20DG/VT	FRONT INTRUSION SENSOR SIGNAL
3	G22 20YL	VTSS INDICATOR SUPPLY
4	D23 20WT/BR	FLASH PROGRAM ENABLE
5	-	-
6	D96 20WT/LB	SIREN SIGNAL CONTROL
7	F20 20PK/WT	FUSED IGNITION SWITCH OUTPUT (RUN-START)
8	Z109 20BK/GY	GROUND
9	G945 20VT/DG	SENSOR GROUND
10	G946 20LG/VT	SENSOR GROUND
11	G922 20GY	VTSS INDICATOR DRIVER
12	-	-
13	D25 20WT/VT	PCI BUS
14	-	-
15	L91 20WT/DB	HAZARD SWITCH SENSE
16	A114 18GY/RD	FUSED B(+) (I.O.D.)

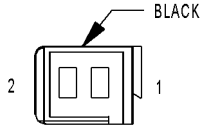

TRACTION CONTROL SWITCH

TRACTION CONTROL SWITCH - BLACK 2 WAY

CAV	CIRCUIT	FUNCTION
1	B27 20DG/WT	TRACTION CONTROL SWITCH SENSE
2	Z427 20BK/WT	GROUND

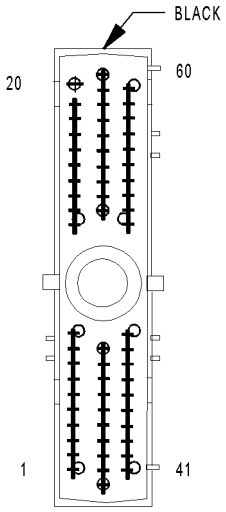

TRANSMISSION CONTROL MODULE (DIESEL)

TRANSMISSION CONTROL MODULE (DIESEL) - BLACK

CAV	CIRCUIT	FUNCTION
1	T1 18DG/LB	TRS T1 SENSE
2	-	-
3	T3 18DG/DB	TRS T3 SENSE
4	-	-
5	-	-
6	K24 20BR/LB	CRANKSHAFT POSITION SENSOR SIGNAL NO.2
7	D15 20DG/YL	SCI TRANSMIT (TCM)
8	T751 20YL	FUSED IGNITION SWITCH OUTPUT (START)
9	T9 18DG/TN	OVERDRIVE PRESSURE SWITCH SENSE
10	T10 20DG/LG	TORQUE MANAGEMENT REQUEST SENSE
11	F1 18PK/WT	FCM OUTPUT (UNLOCK-RUN-START)
12	K23 20BR/OR	ACCELERATOR PEDAL POSITION SENSOR SIGNAL NO.2
13	T13 18DG/VT	SPEED SENSOR GROUND
14	T14 18DG/BR	OUTPUT SPEED SENSOR SIGNAL
15	T15 18YL/BR	TRANSMISSION CONTROL RELAY CONTROL
16	T16 18YL/OR	TRANSMISSION CONTROL RELAY OUTPUT
17	T16 18YL/OR	TRANSMISSION CONTROL RELAY OUTPUT
18	-	-
19	T19 18YL/DB	2-4 SOLENOID CONTROL
20	T20 18DG/WT	L/R SOLENOID CONTROL
21	-	-
22	-	-
23	-	-
24	-	-
25	-	-
26	-	-
27	-	-
28	-	-
29	-	-
30	-	-
31	-	-
32	-	-
33	-	-
34	-	-
35	-	-
36	-	-
37	-	-
38	-	-
39	-	-
40	-	-
41	T41 18DG/GY	TRS T41 SENSE
42	T42 18DG/YL	TRS T42 SENSE
43	D25 18WT/VT	PCI BUS
44	-	
45	-	
46	D123 20WT/OR	SCI RECIEVE (TCM)
47	T47 18YL/DG	2-4 PRESSURE SWITCH SENSE
48	-	-
49	-	-
50	T50 18YL/TN	LOW/REVERSE PRESSURE SWITCH SENSE
51	K900 20DB/DG	SENSOR GROUND
52	T52 18DG/WT	INPUT SPEED SENSOR SIGNAL
53	Z132 16BK/YL	GROUND
54	T54 18DG/OR	TRANSMISSION TEMPERATURE SENSOR SIGNAL
55	-	-
56	A104 18YL/RD	FUSED B(+)
57	Z133 16BK/LG	GROUND
58	N7 20DB/OR	VEHICLE SPEED SENSOR SIGNAL
59	T59 18YL/LB	UNDERDRIVE SOLENOID CONTROL
60	T60 18YL/GY	OVERDRIVE SOLENOID CONTROL

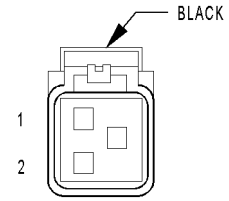

WASHER FLUID LEVEL SWITCH

WASHER FLUID LEVEL SWITCH - BLACK 2 WAY

CAV	CIRCUIT	FUNCTION
1	Z401 18BK/LB (EXCEPT EXPORT)	GROUND
1	Z401 20BK/LB (EXPORT)	GROUND
2	W1 18BR/TN	WASHER FLUID LEVEL SWITCH SENSE

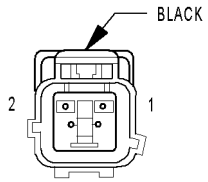

WASHER PUMP MOTOR

WASHER PUMP MOTOR - BLACK 2 WAY

CAV	CIRCUIT	FUNCTION
1	W20 18BR/YL	REAR WASHER PUMP MOTOR CONTROL
2	W10 18BR	FRONT WASHER PUMP MOTOR CONTROL

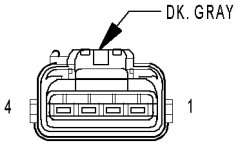

WIPER MODULE

WIPER MODULE - DK. GRAY 4 WAY

CAV	CIRCUIT	FUNCTION
1	W3 14BR/WT	FRONT WIPER HIGH/LOW RELAY LOW SPEED OUTPUT
2	W7 20BR/GY	WIPER PARK SWITCH SENSE
3	W4 14BR/OR	FRONT WIPER HIGH/LOW RELAY HIGH SPEED OUTPUT
4	Z103 14BK/WT	GROUND

10.0 SCHEMATIC DIAGRAMS

10.1 ADJUSTABLE PEDALS SYSTEM

10.1.1 NON-MEMORY

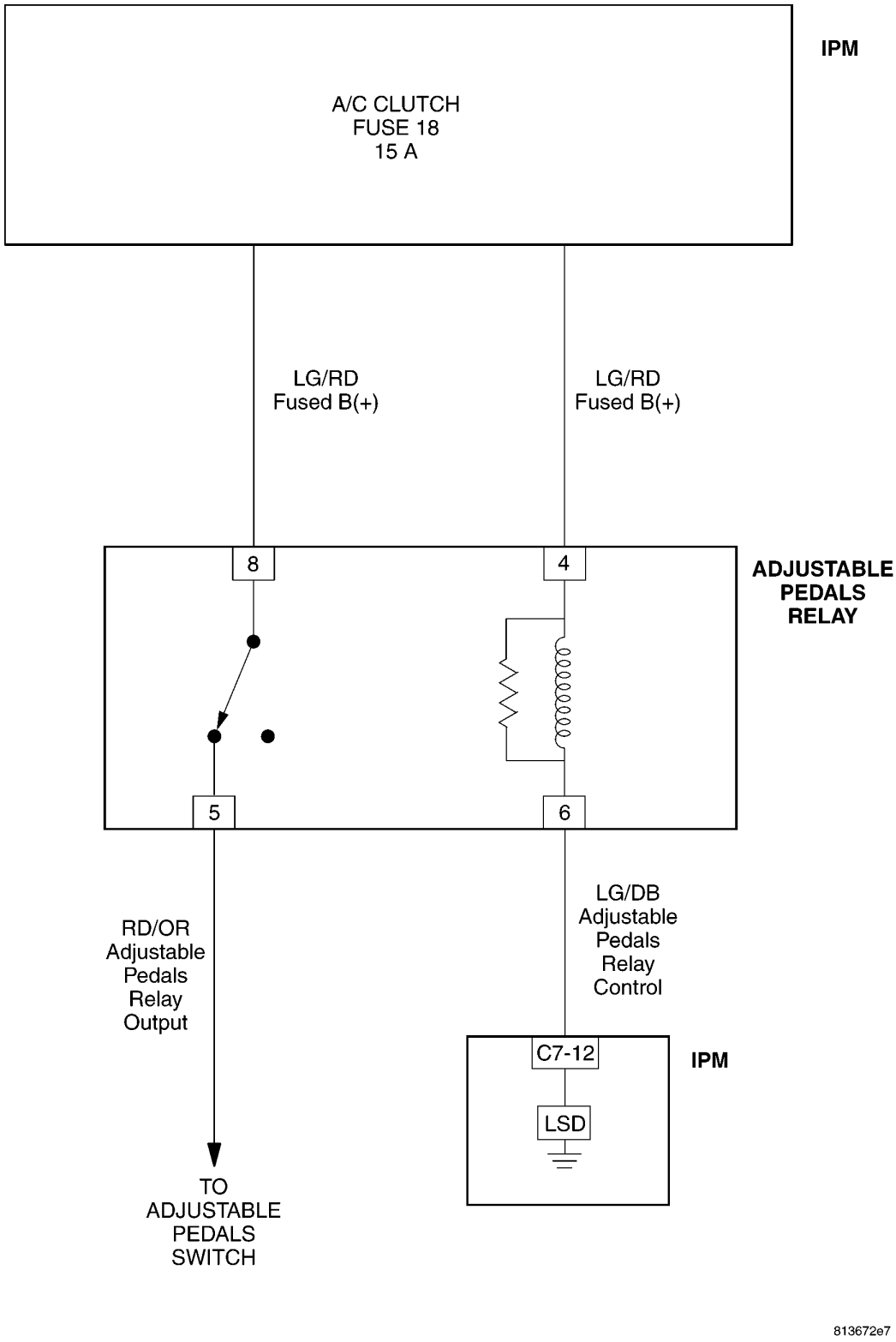

10.1.2 MEMORY

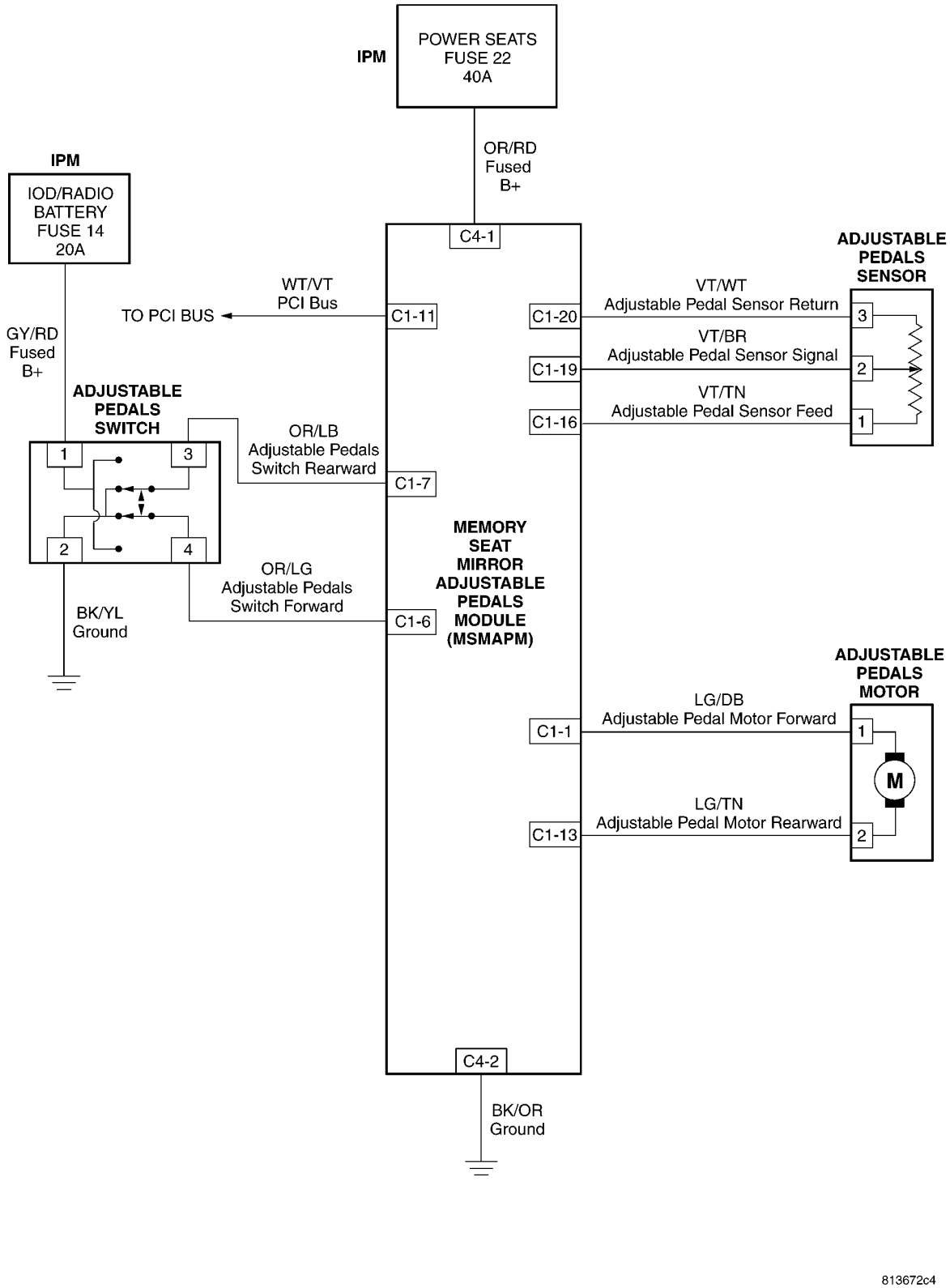
IPM
POWER SEATS
FUSE 22
40A
OR/RD
Fused
B+
IPM
IOD/RADIO
BATTERY
FUSE 14
20A
C4-1
ADJUSTABLE
PEDALS
SENSOR
WT/VT
PCI Bus
TO PCI BUS
C1-11
C1-20
VT/WT
Adjustable Pedal Sensor Return
3
VT/BR
Adjustable Pedal Sensor Signal
C1-19
2
VT/TN
Adjustable Pedal Sensor Feed
C1-16
1
GY/RD
Fused
B+
ADJUSTABLE
PEDALS
SWITCH
1
3
2
4
OR/LB
Adjustable Pedals
Switch Rearward
C1-7
MEMORY
SEAT
MIRROR
ADJUSTABLE
PEDALS
MODULE
(MSMAPM)
OR/LG
Adjustable Pedals
Switch Forward
C1-6
BK/YL
Ground
ADJUSTABLE
PEDALS
MOTOR
LG/DB
Adjustable Pedal Motor Forward
C1-1
1
M
LG/TN
Adjustable Pedal Motor Rearward
C1-13
2
C4-2
BK/OR
Ground
813672c4

10.2 AIRBAG SYSTEM

10.2.1 OCCUPANT RESTRAINT CONTROLLER - HIGH LINE

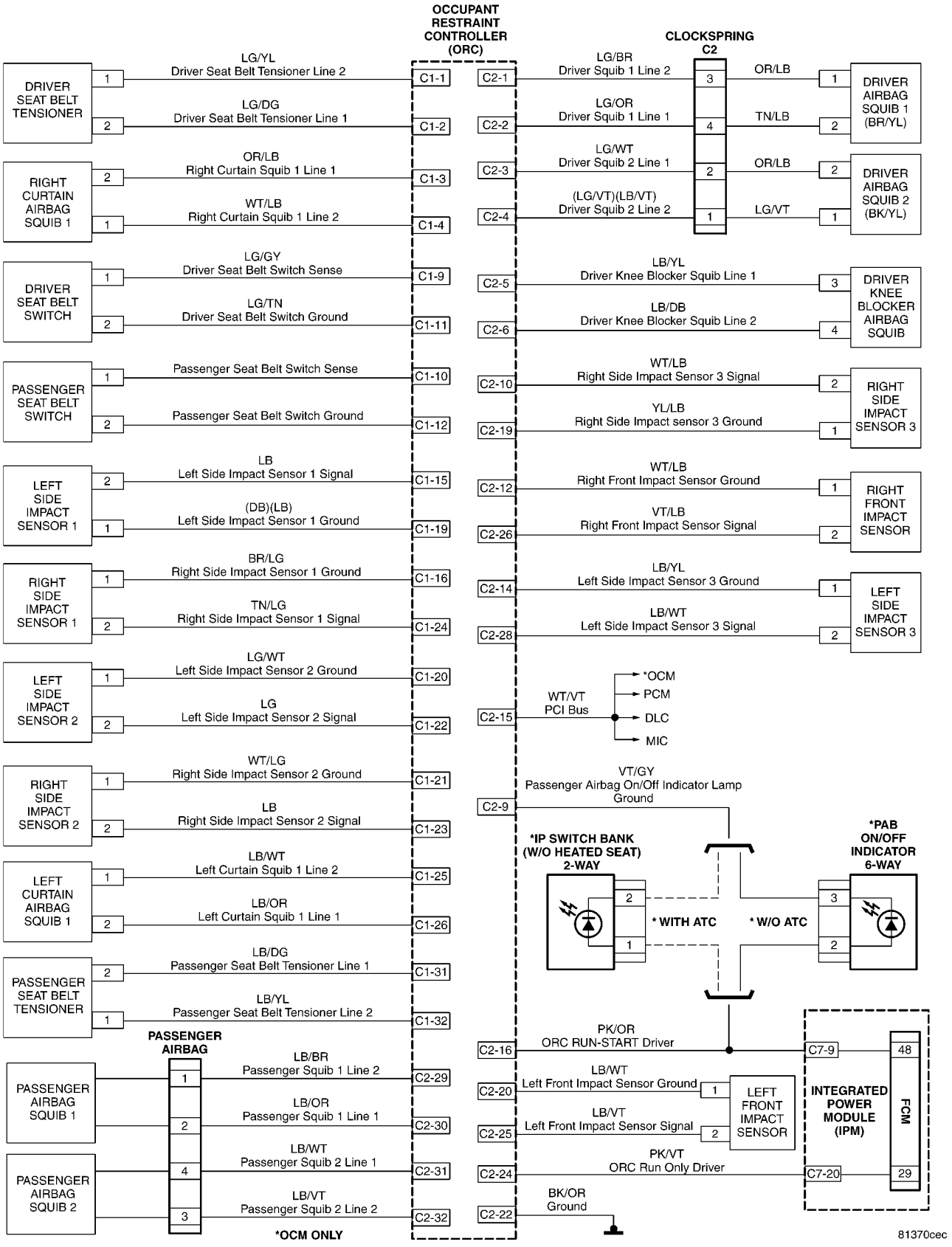

10.2 AIRBAG SYSTEM (Continued)

10.2.2 OCCUPANT RESTRAINT CONTROLLER - LOW LINE

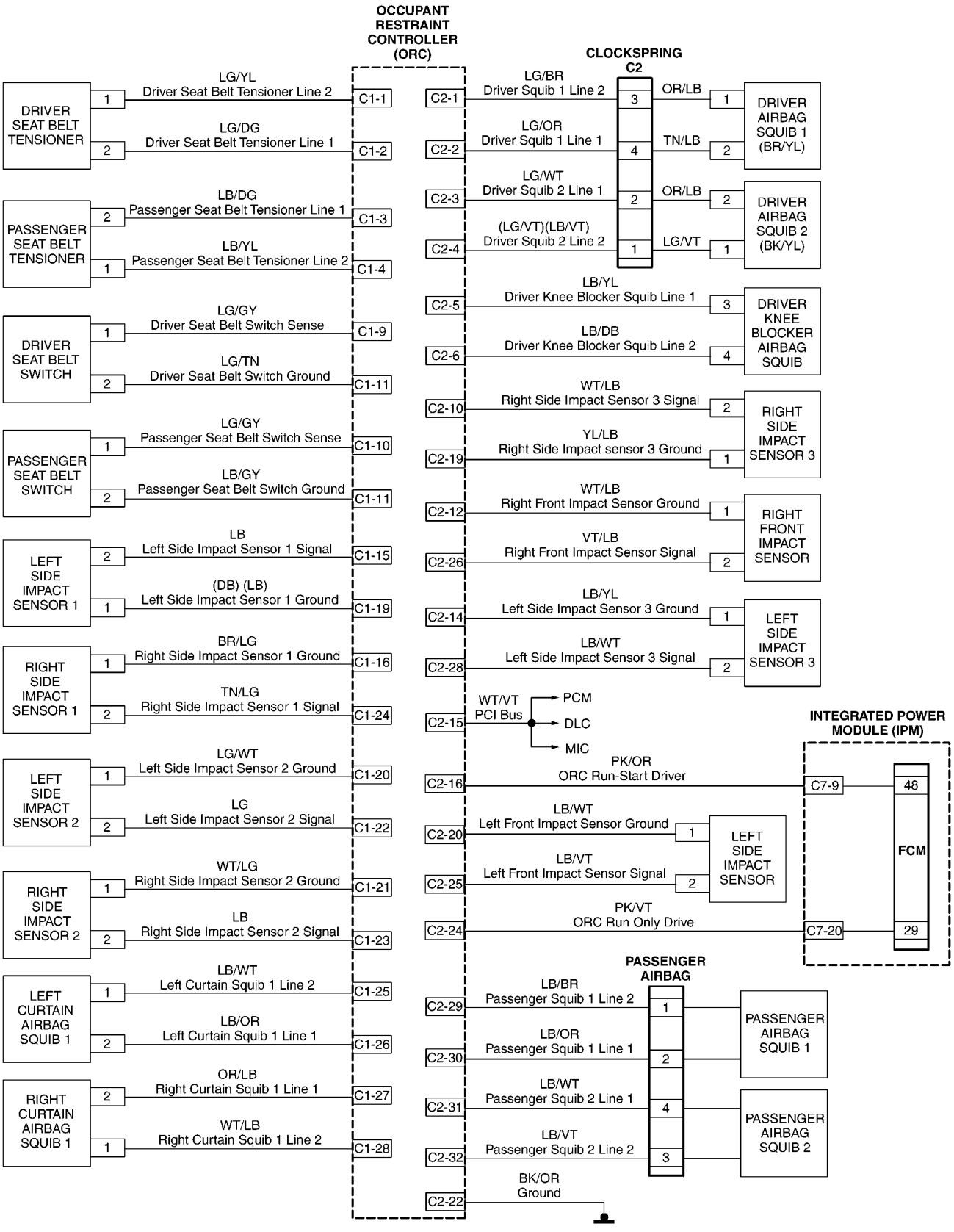

10.2.3 OCCUPANT CLASSIFICATION SYSTEM

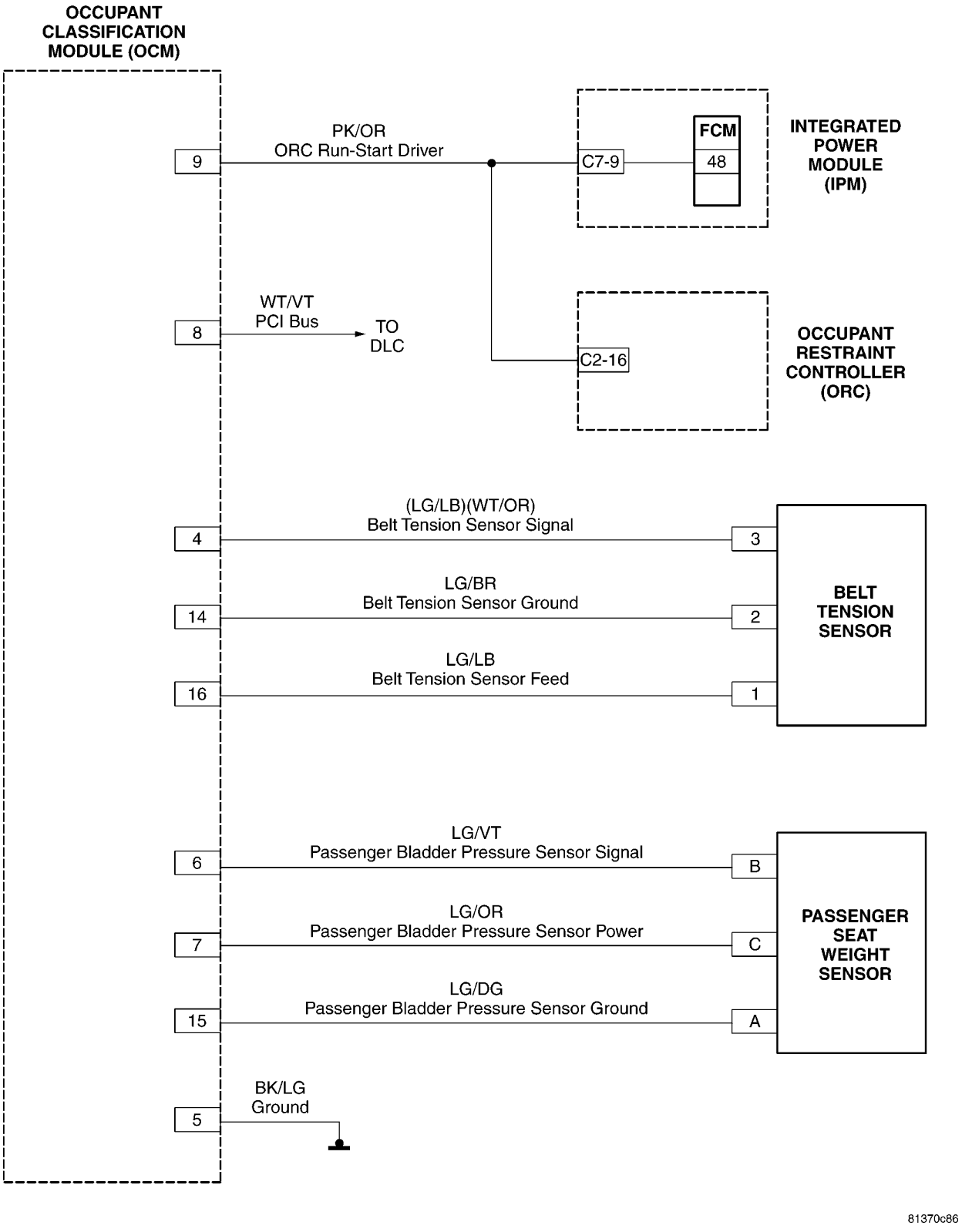

10.3 AUDIO SYSTEM

10.3.1 PREMIUM AUDIO SYSTEM

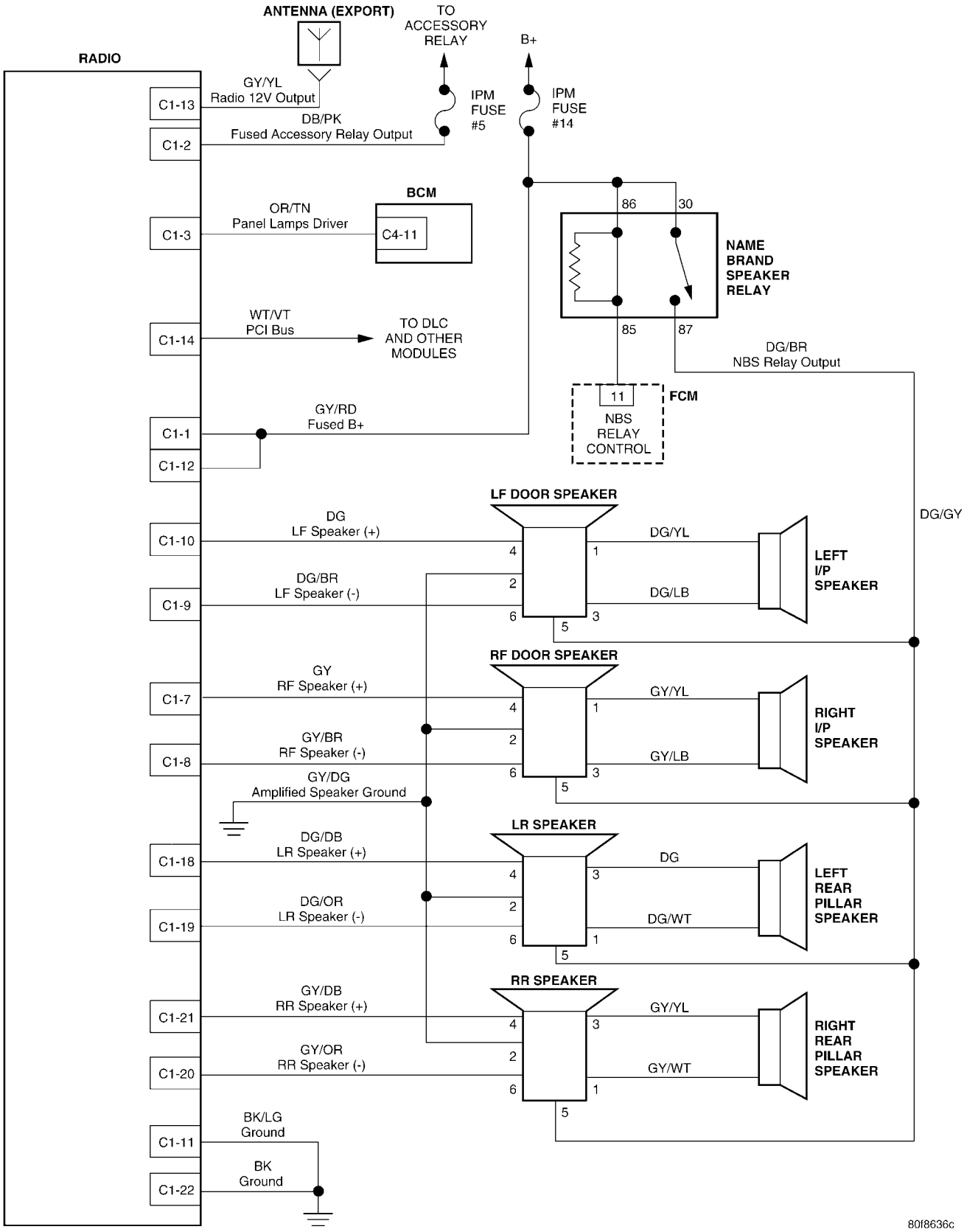

10.3.2 BASE AUDIO SYSTEM

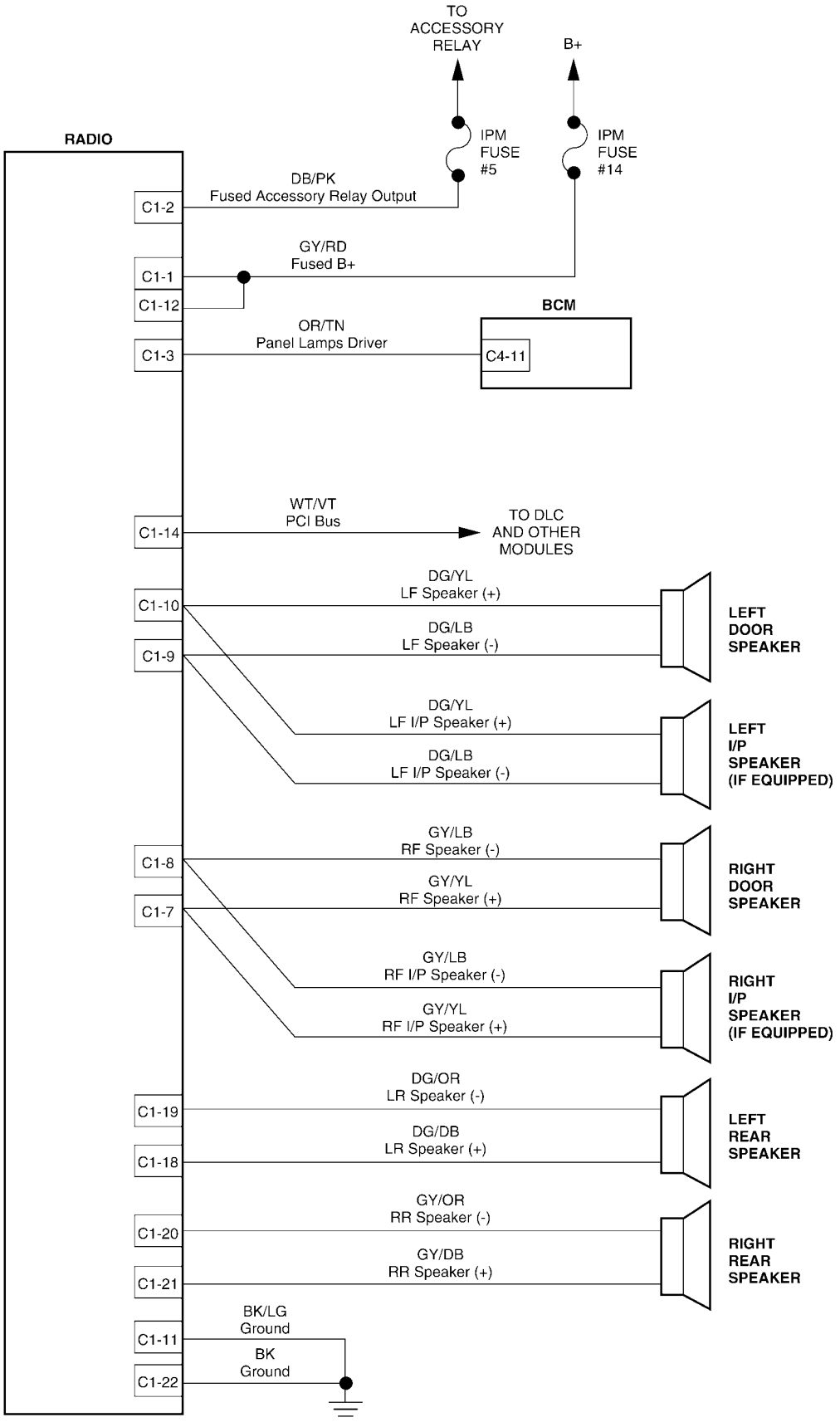

10.3 AUDIO SYSTEM (Continued)
10.3.3 CD CHANGER

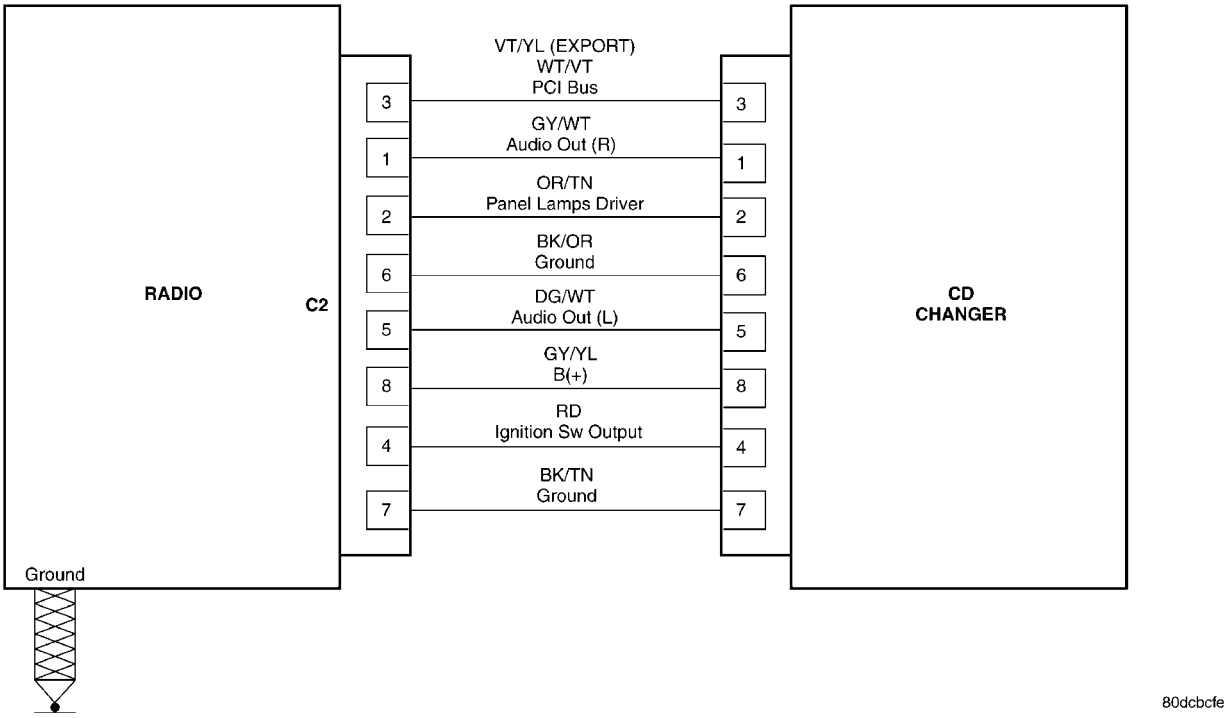

10.3.4 DVD/CD CHANGER

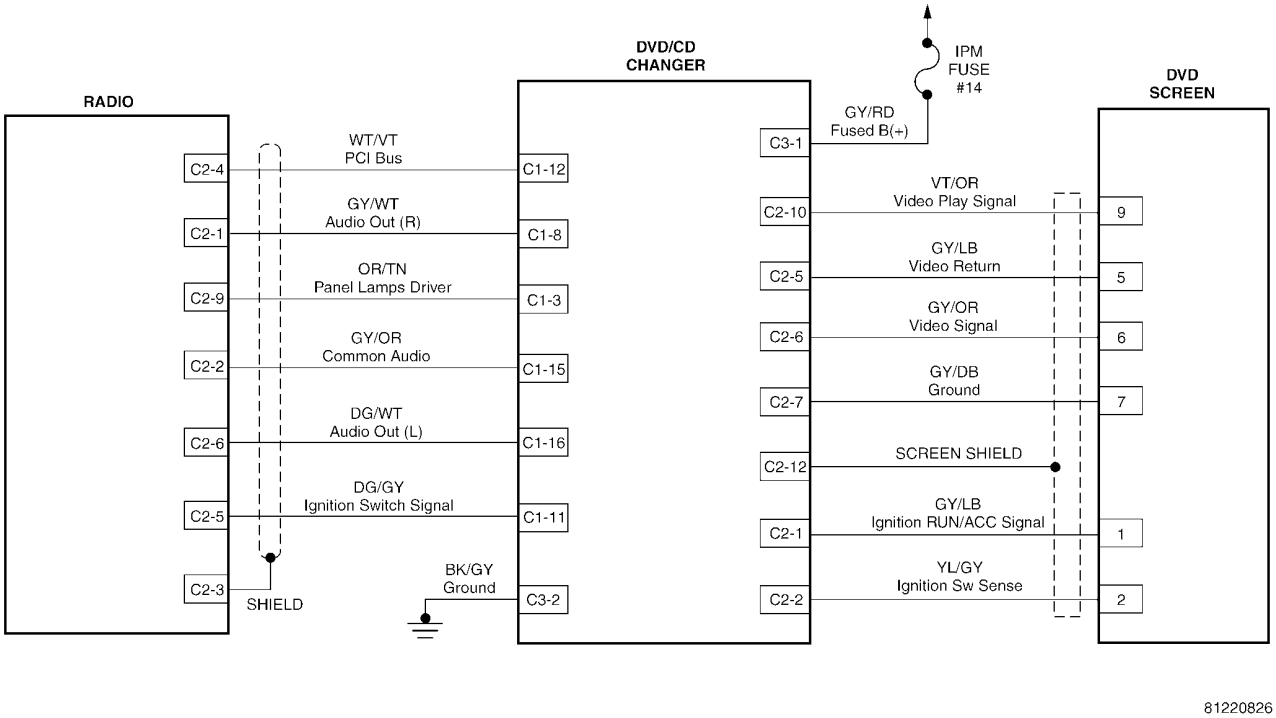

10.3.5 REMOTE RADIO CONTROLS

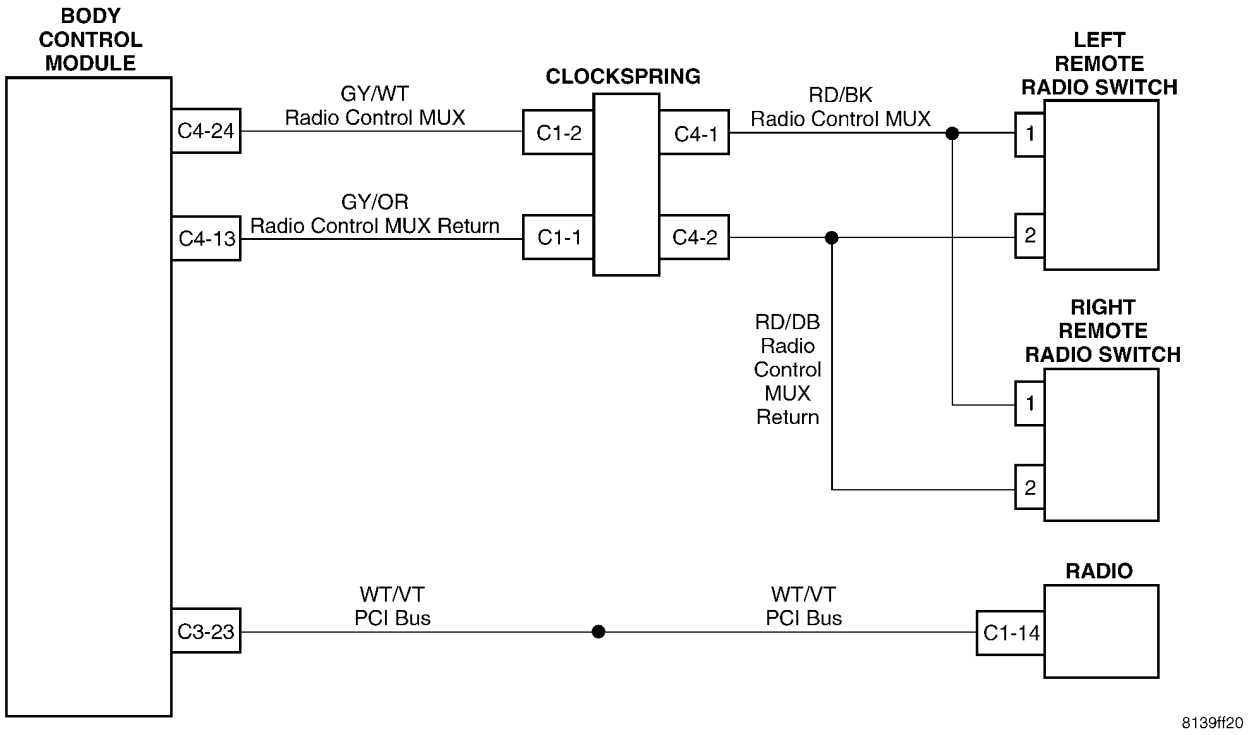

10.4 AUTOMATIC TEMPERATURE CONTROL SYSTEM

10.4.1 FRONT ATC - LHD

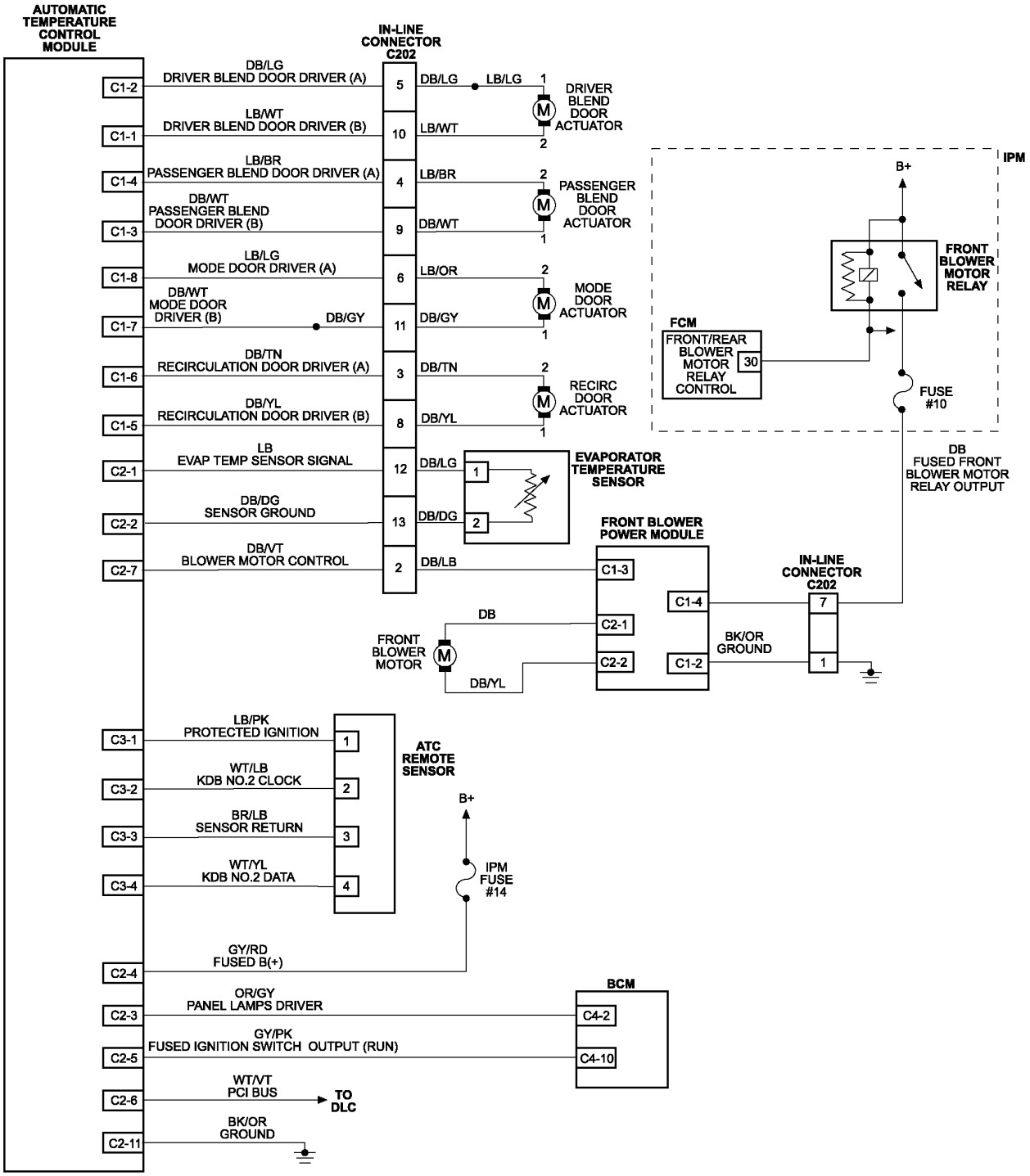

811f6f6f

10.4.2 FRONT ATC - RHD

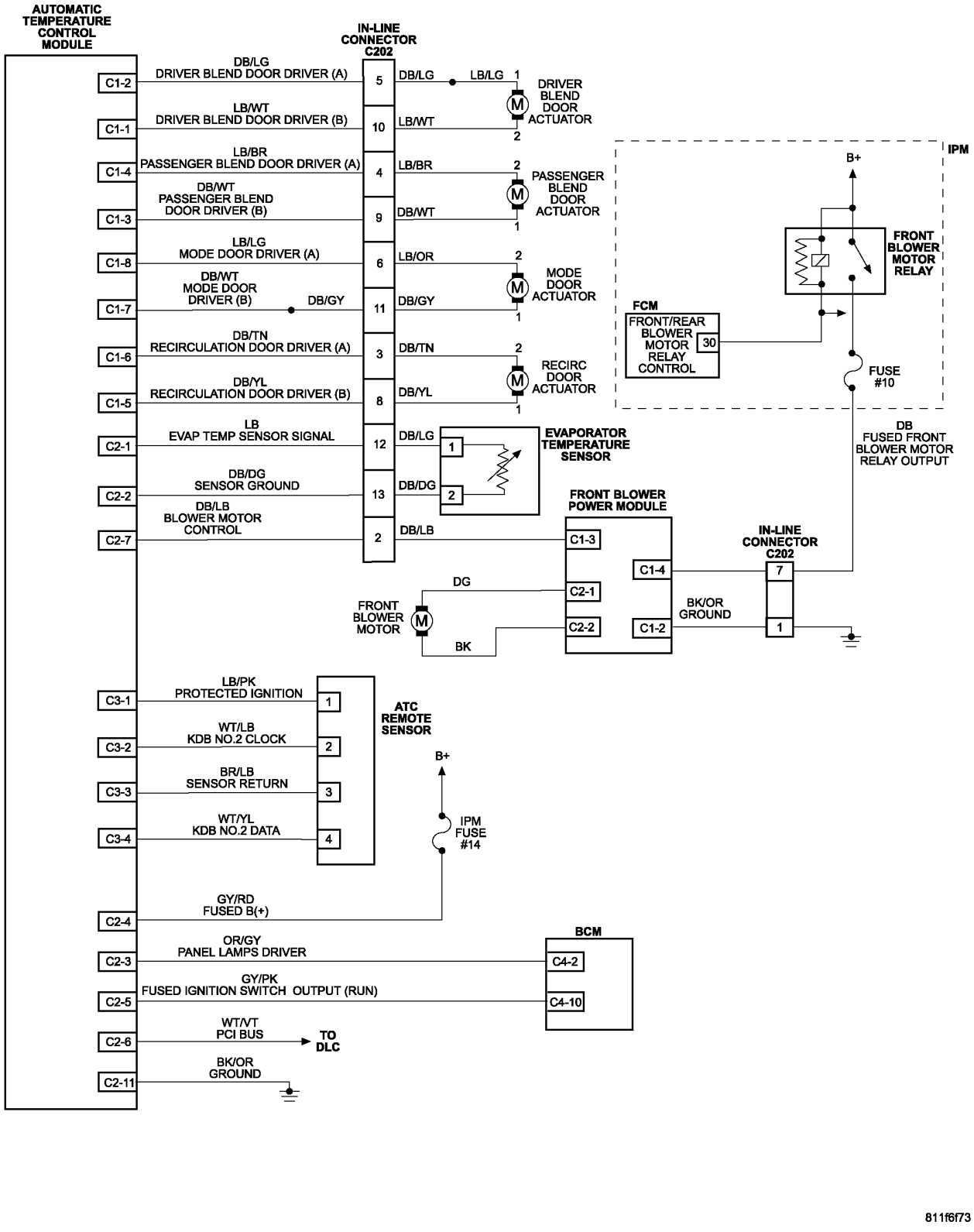

10.4 AUTOMATIC TEMPERATURE CONTROL SYSTEM (Continued)
10.4.3 REAR ATC - THREE ZONE

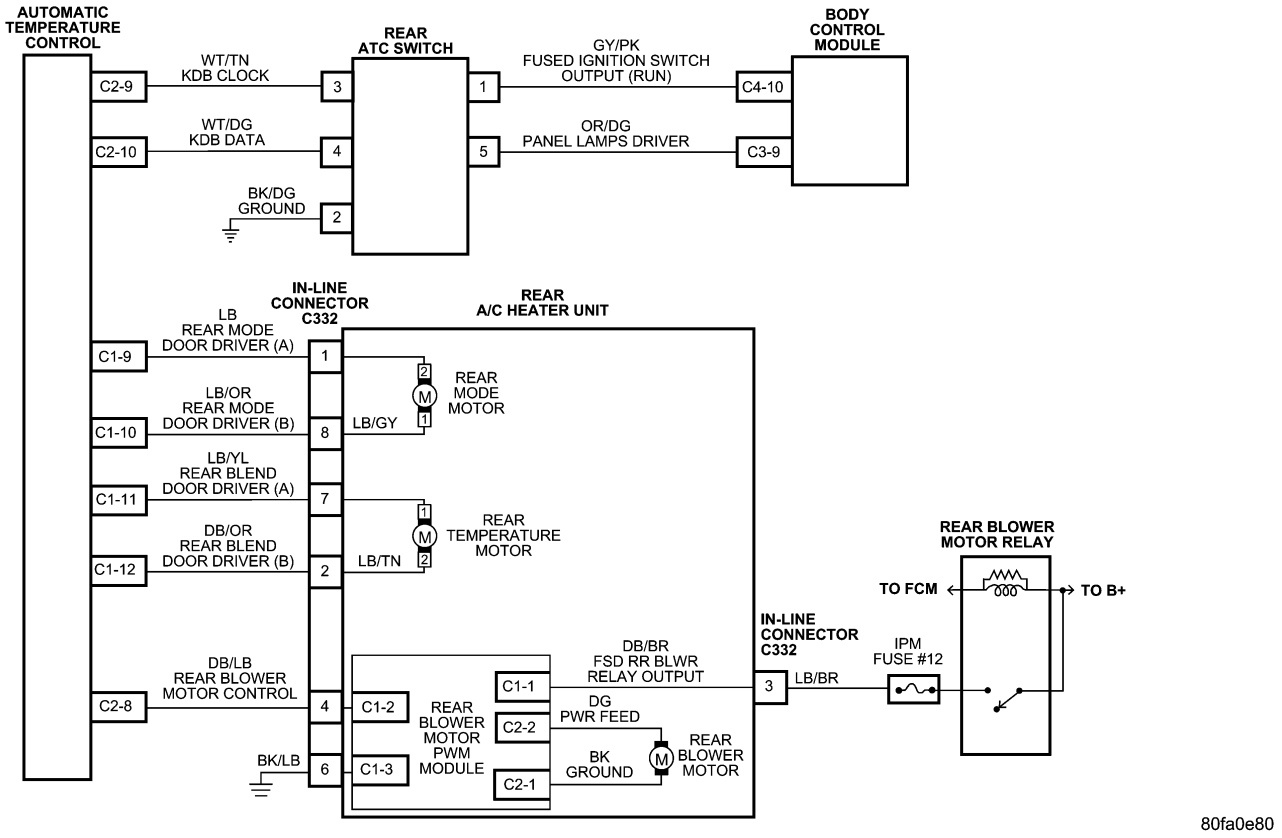

10.5 CABIN HEATER

10.5.1 DIESEL CABIN HEATER ASSIST (DCHA)

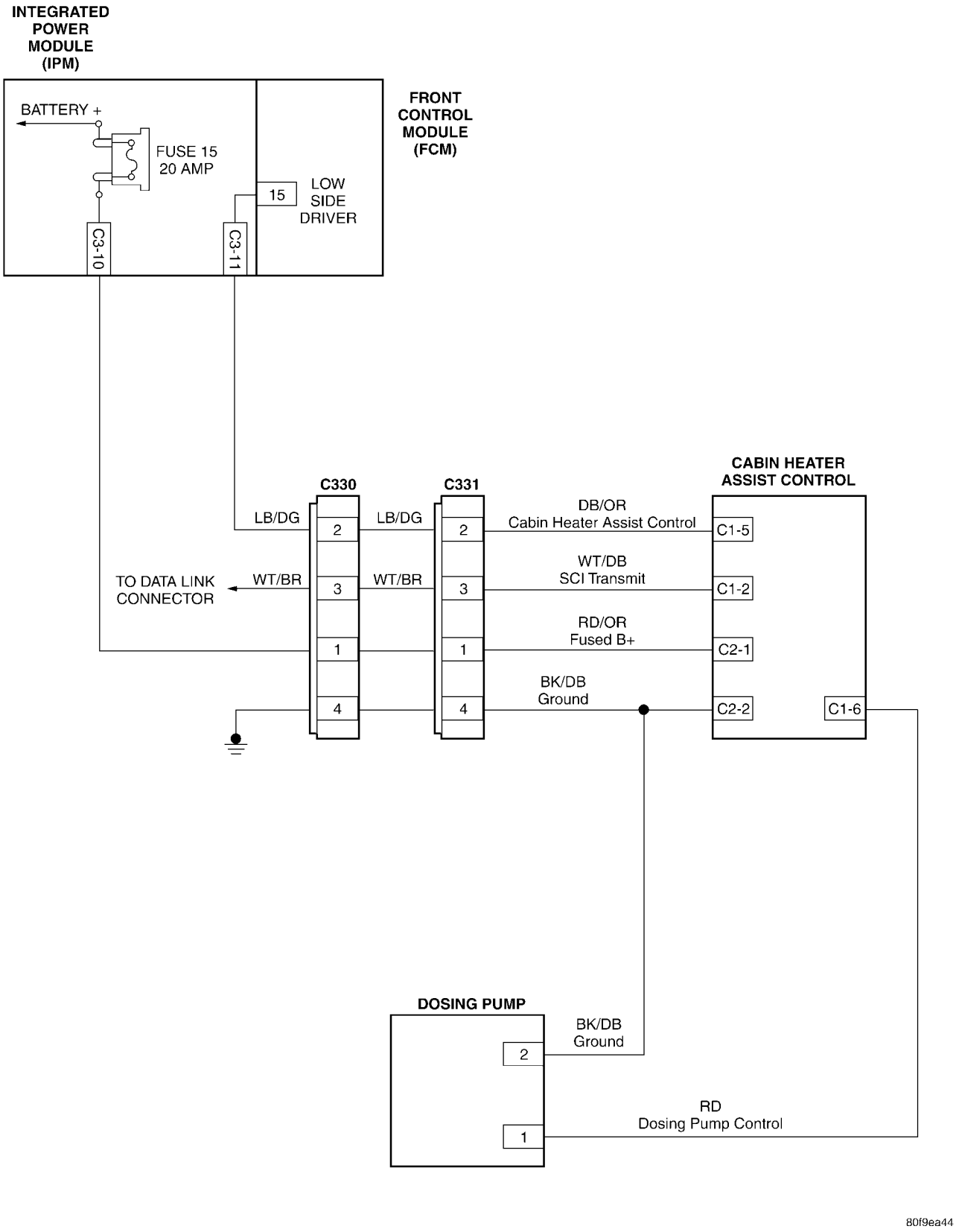

10.6 COMMUNICATION

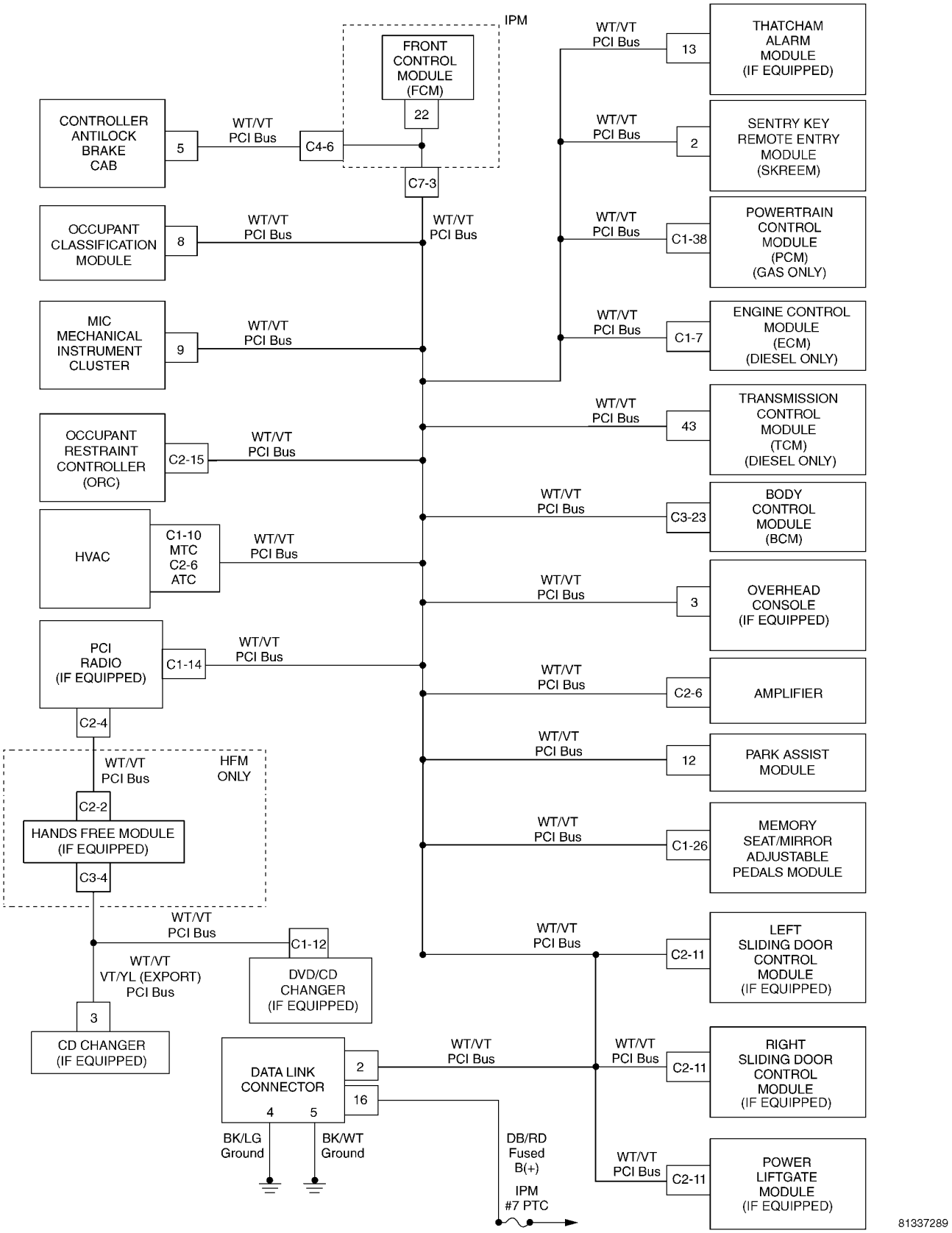

10.6.1 PCM COMMUNICATION - NGC

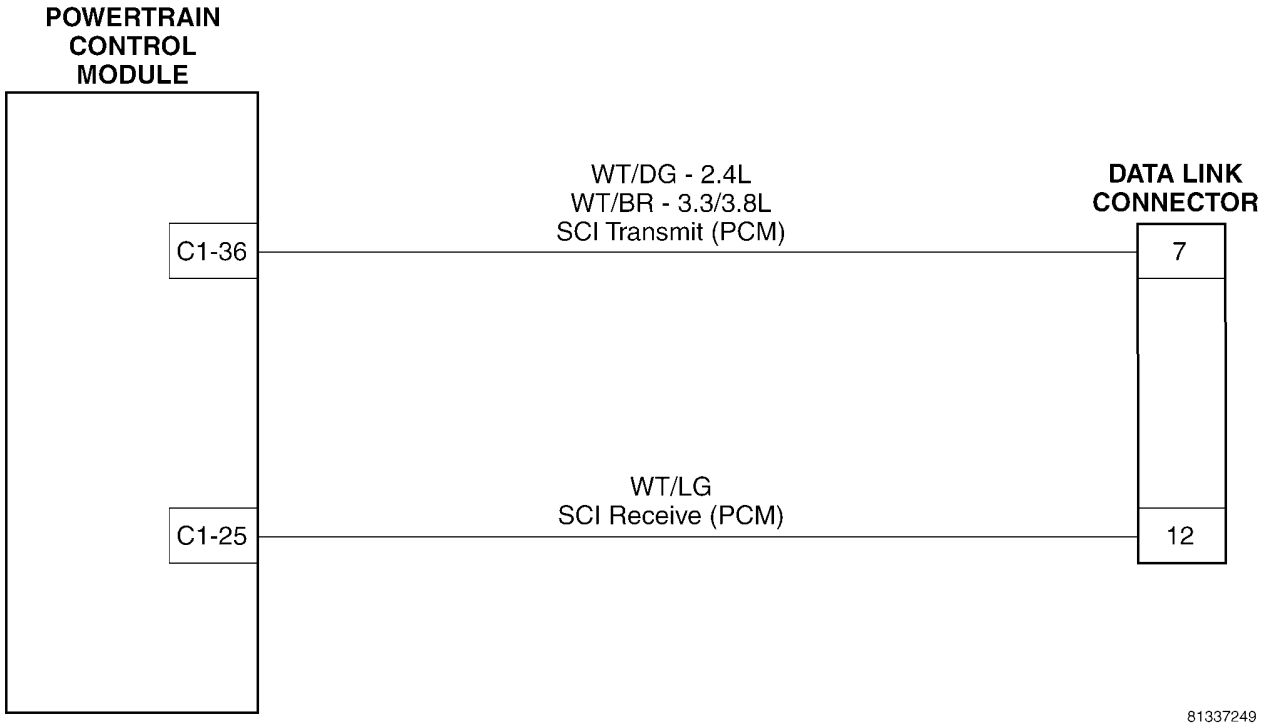

10.6.2 ECM & CABIN HEATER ASSIST COMMUNICATION - DIESEL ONLY

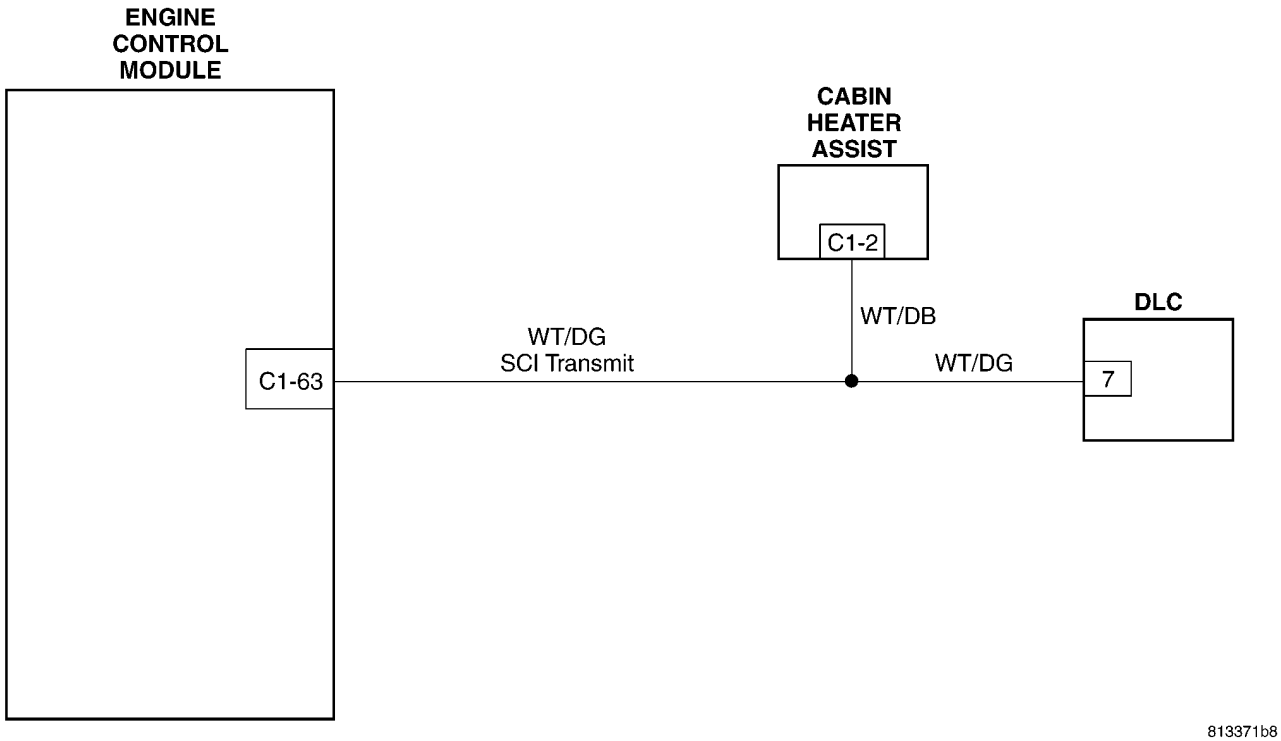

10.7 DOOR AJAR SYSTEM

10.7.1 DOOR AJAR SYSTEM WITH POWER SLIDING DOORS

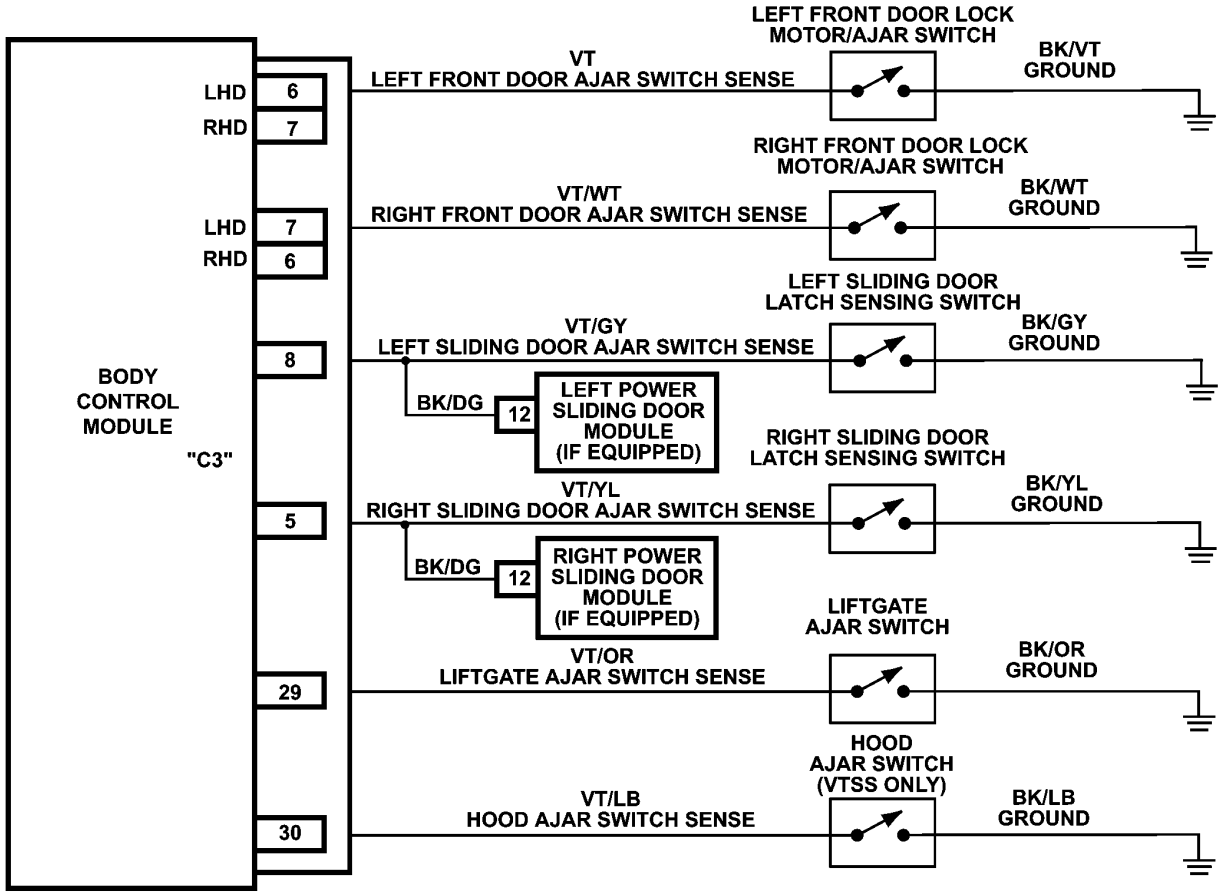

80d85f29

10.7.2 DOOR AJAR WITHOUT POWER SLIDING DOORS

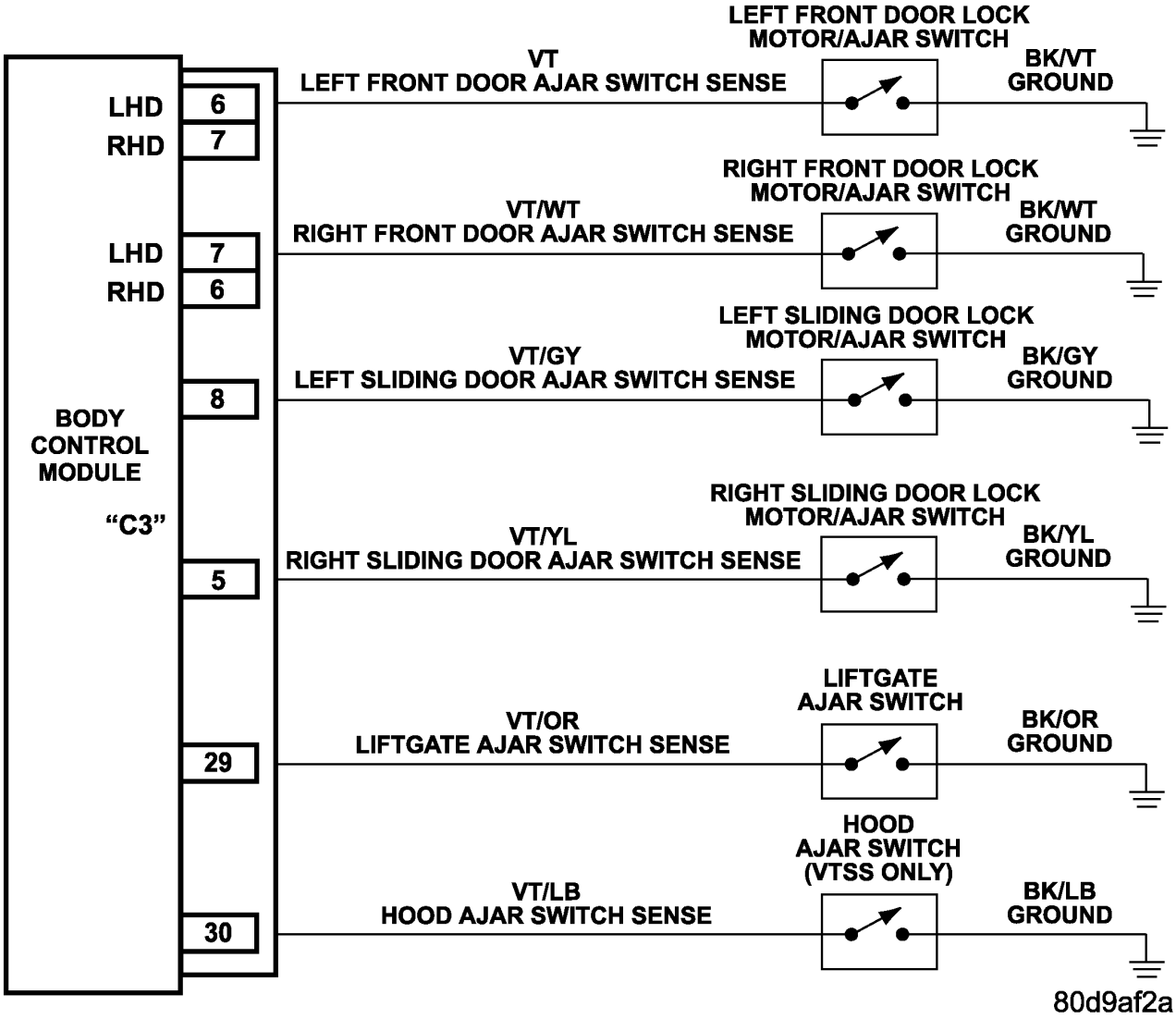

10.8 EXTERIOR LIGHTING

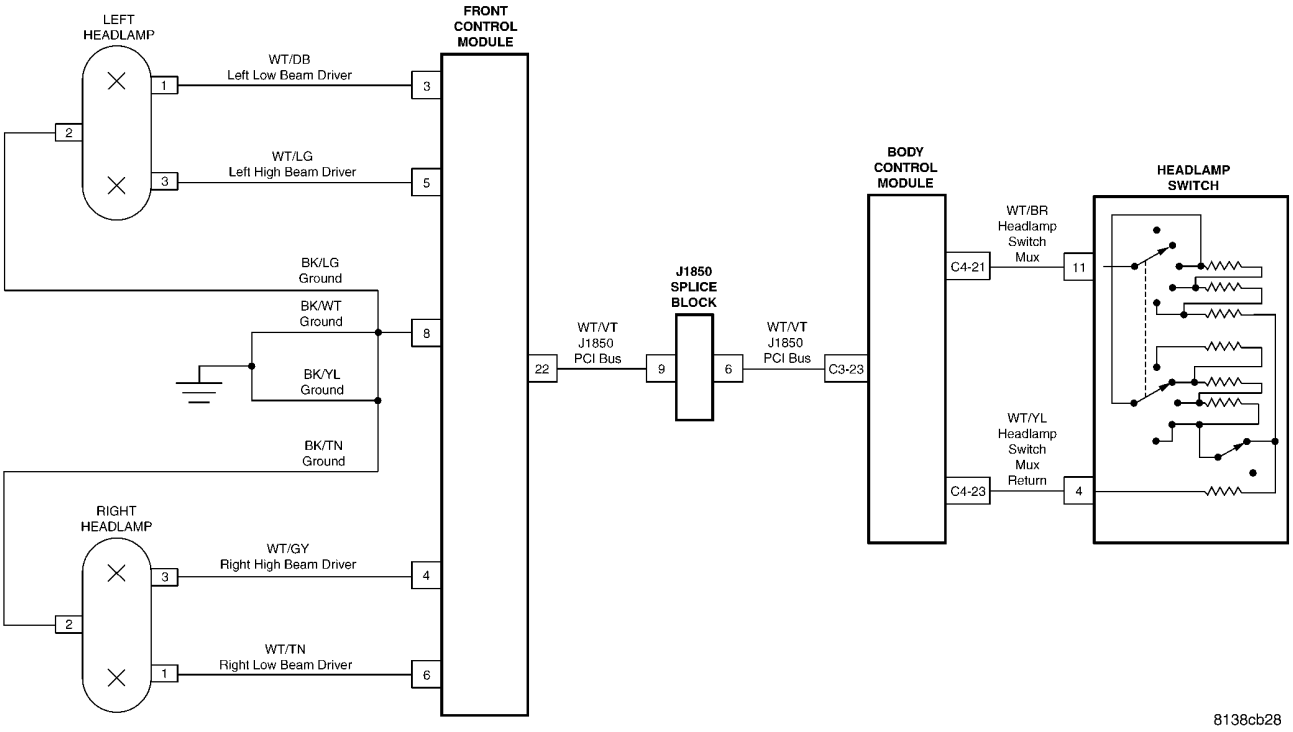

10.9 IGNITION, POWER, ACCESSORY

10.9.1 HORN SYSTEM

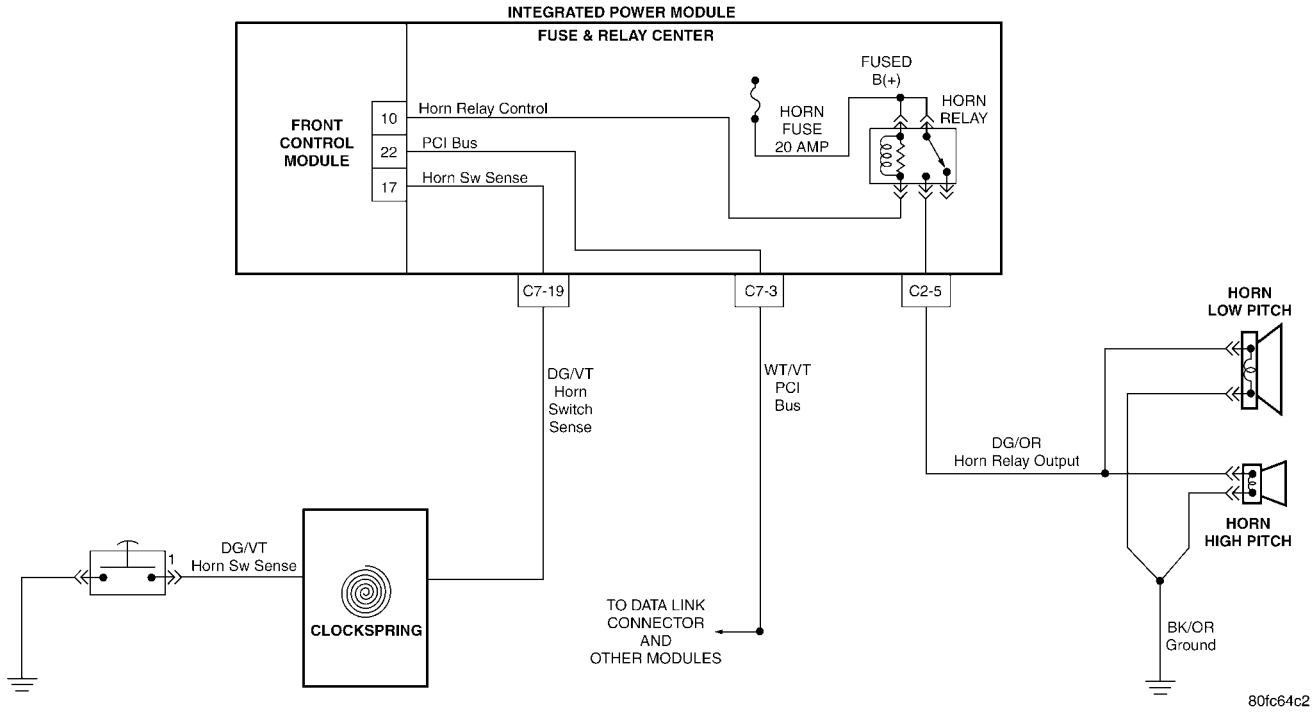

10.9 IGNITION, POWER, ACCESSORY (Continued)
10.9.2 IGNITION SWITCH

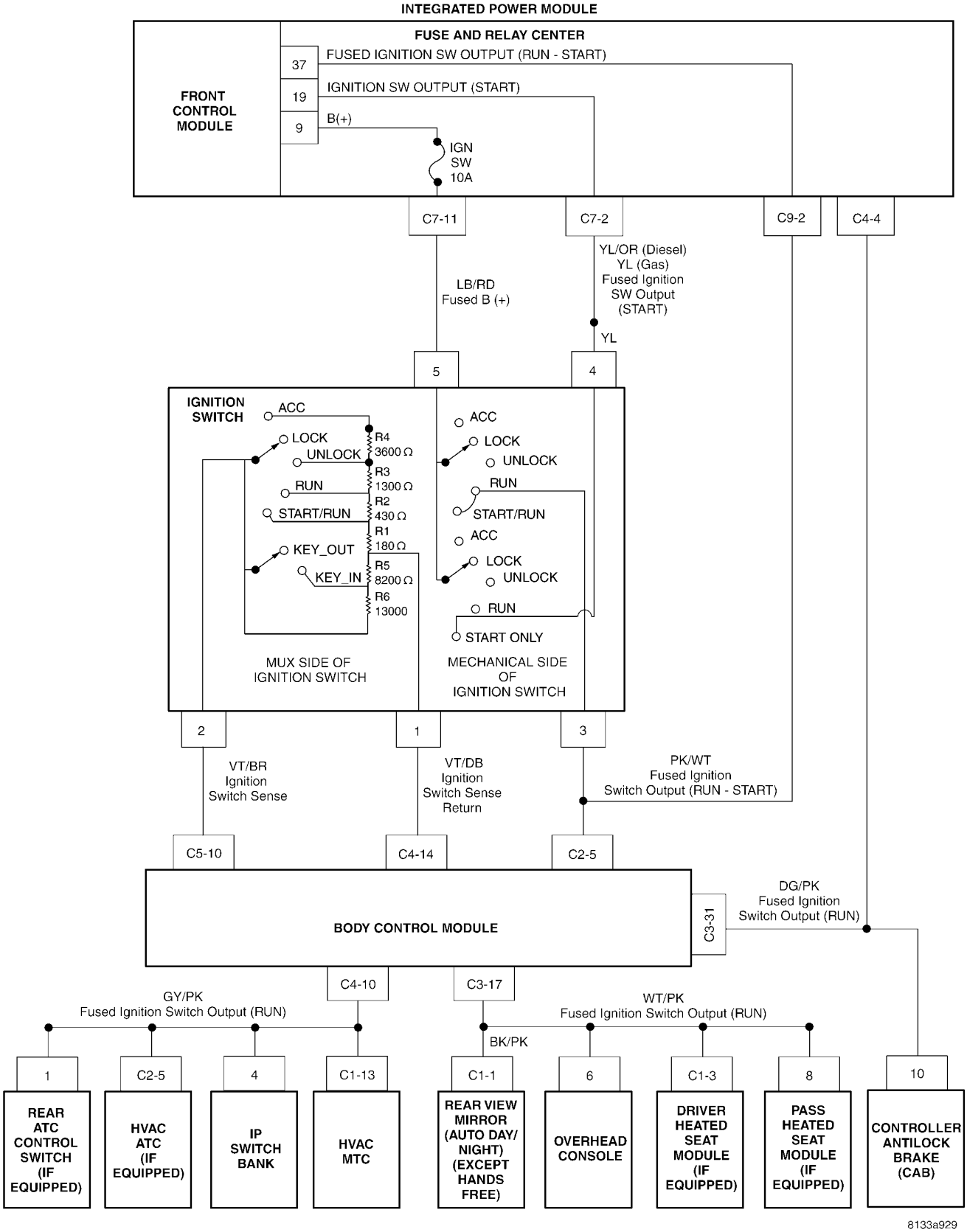

10.9.3 INTEGRATED POWER MODULE/BODY CONTROL MODULE POWER AND GROUNDS

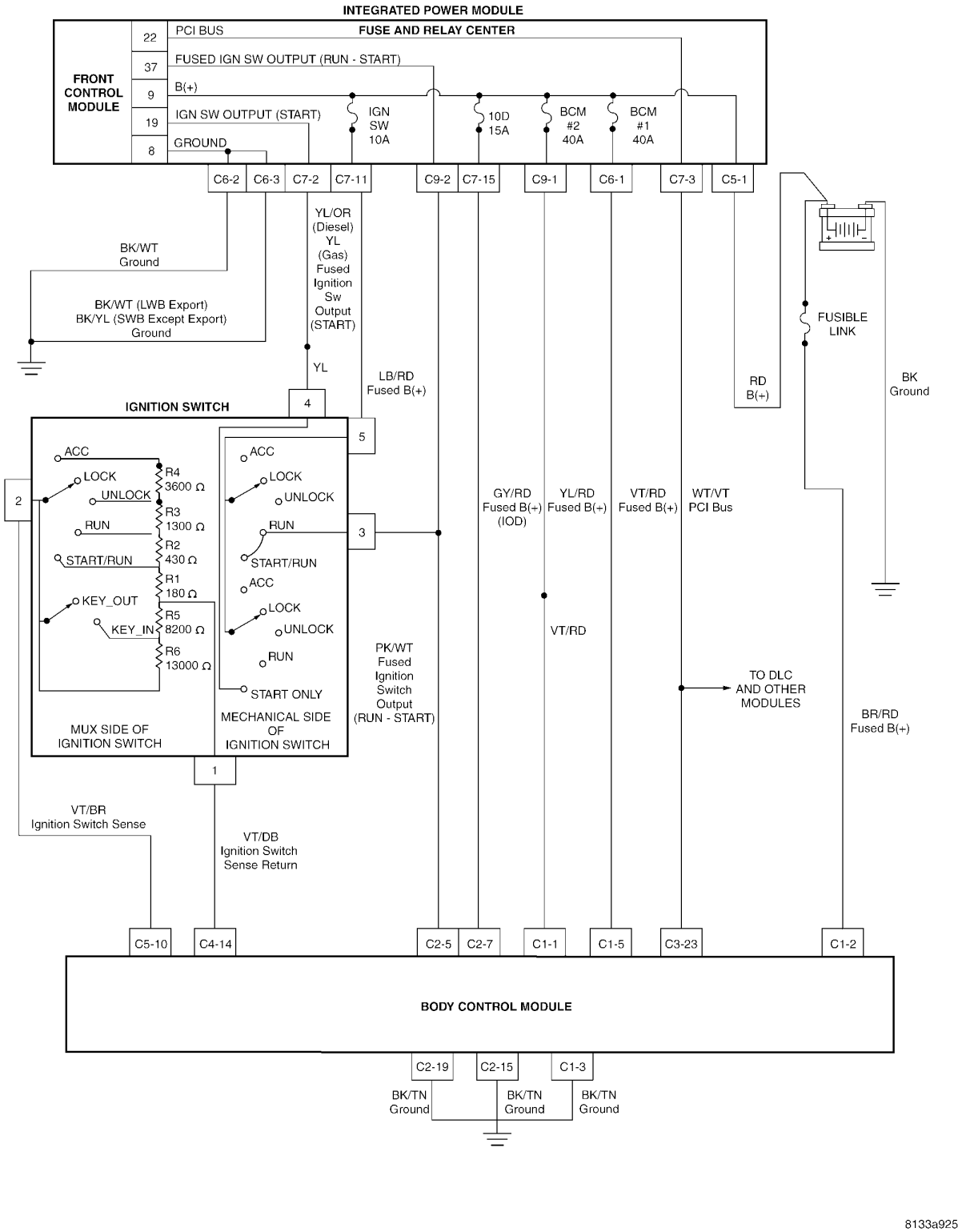

10.10 INSTRUMENT CLUSTER

10.10.1 INSTRUMENT CLUSTER — BASE

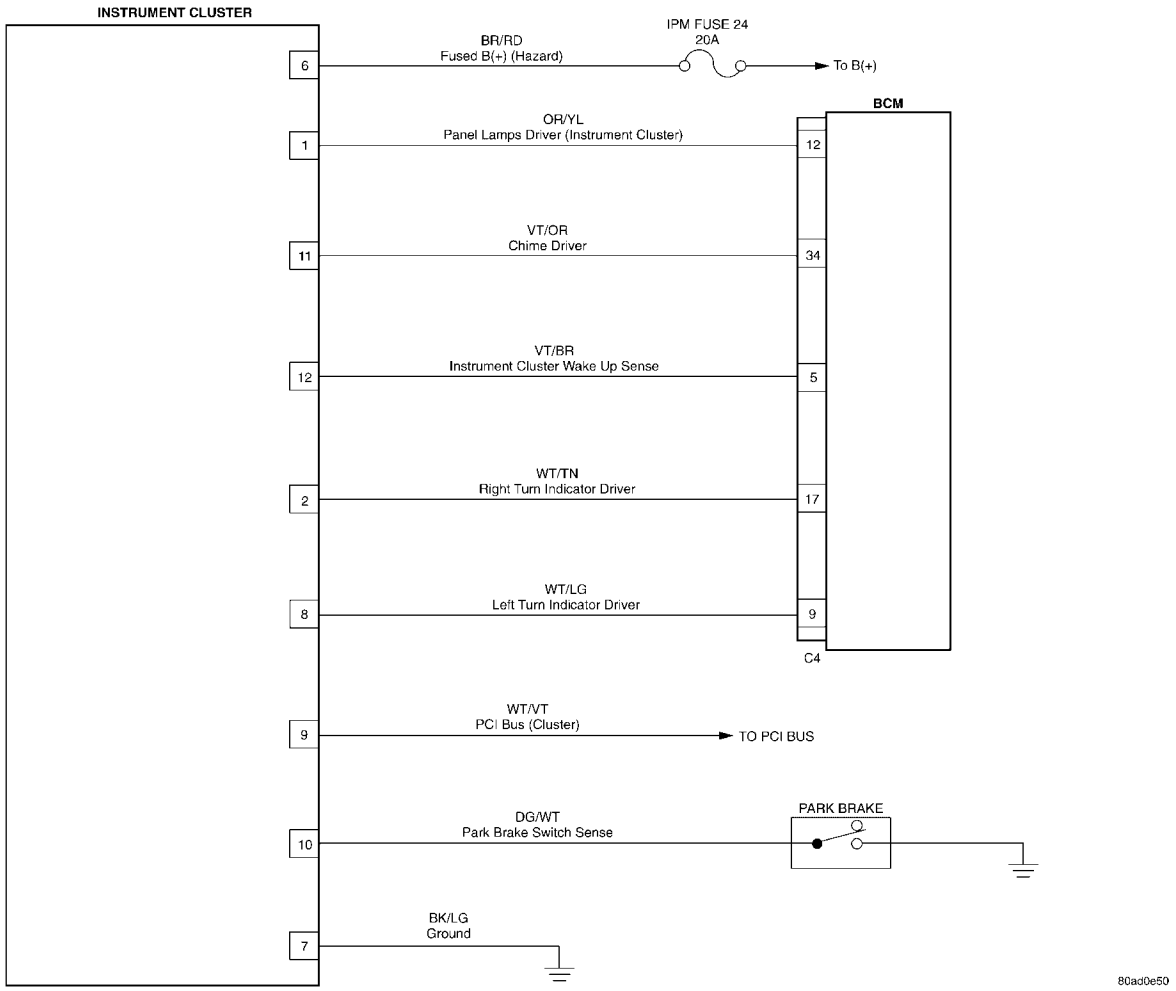

10.10.2 INSTRUMENT CLUSTER & MESSAGE CENTER (EXPORT, LHD)

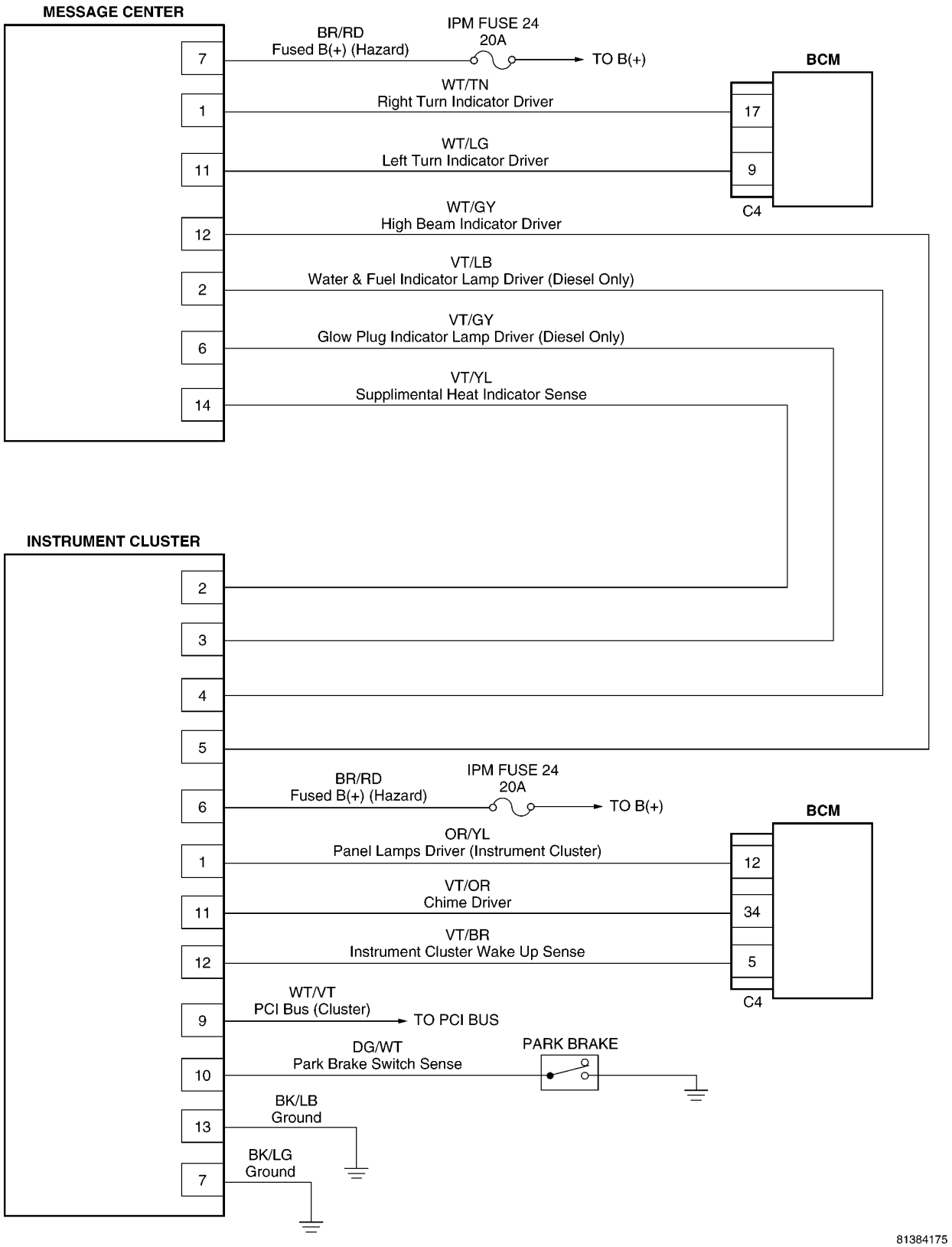

10.10 INSTRUMENT CLUSTER (Continued)

10.10.3 INSTRUMENT CLUSTER & MESSAGE CENTER (EXPORT, RHD)

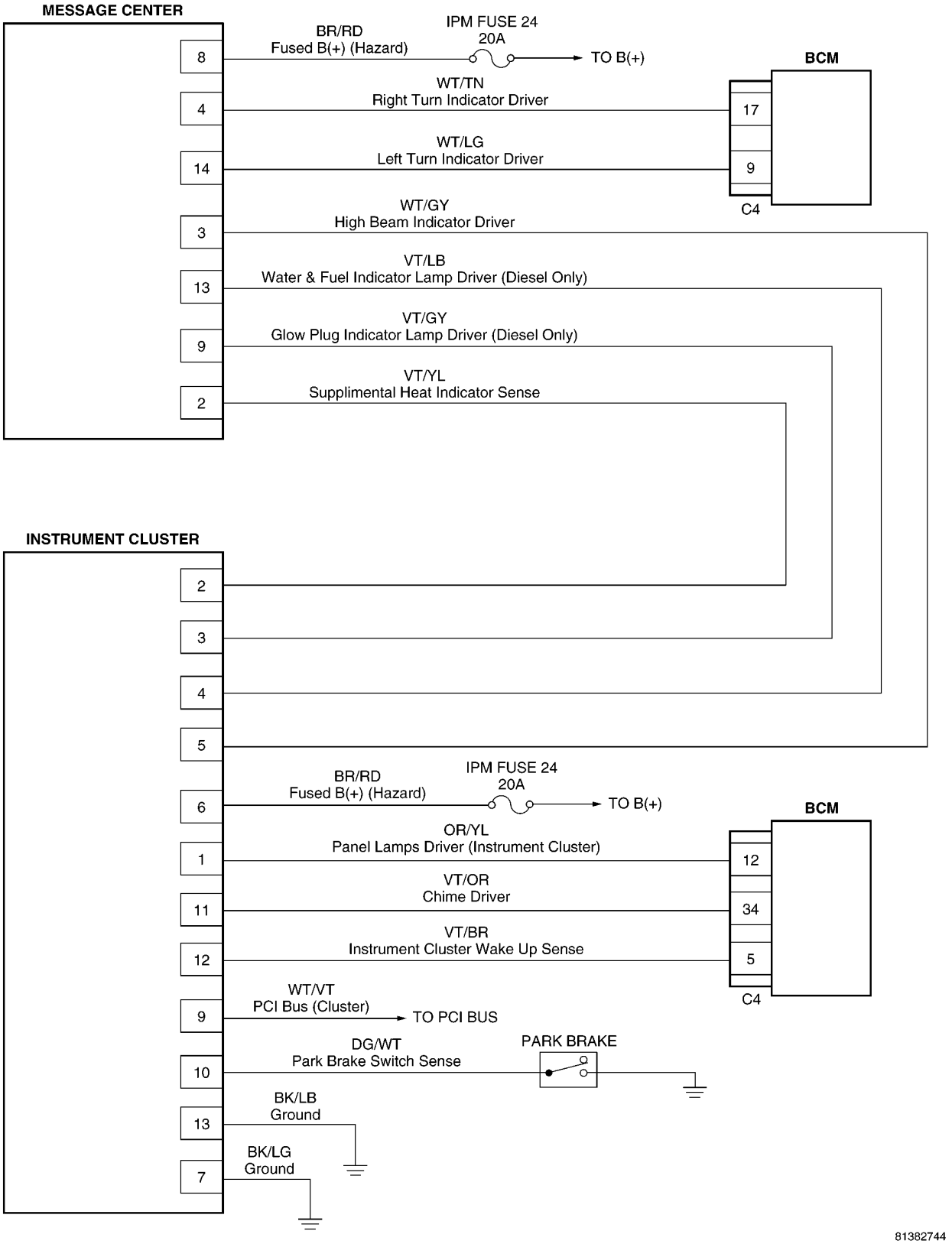

10.11 INTERIOR LIGHTING

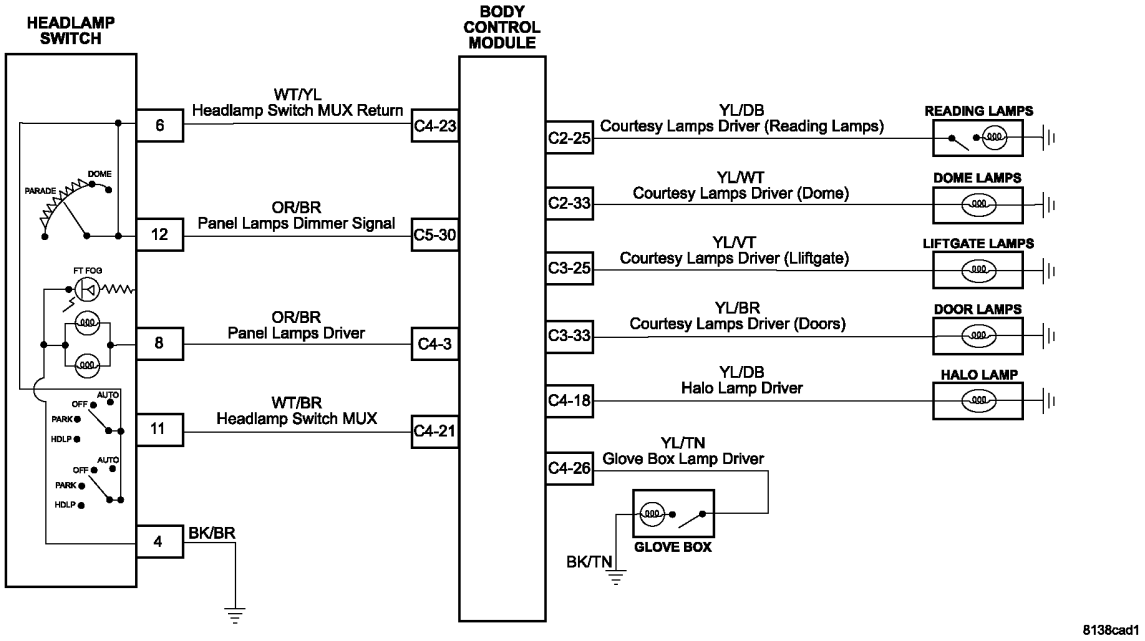

10.12 MANUAL TEMPERATURE CONTROLS

10.12.1 BASE MANUAL TEMPERATURE CONTROL SYSTEM, LHD

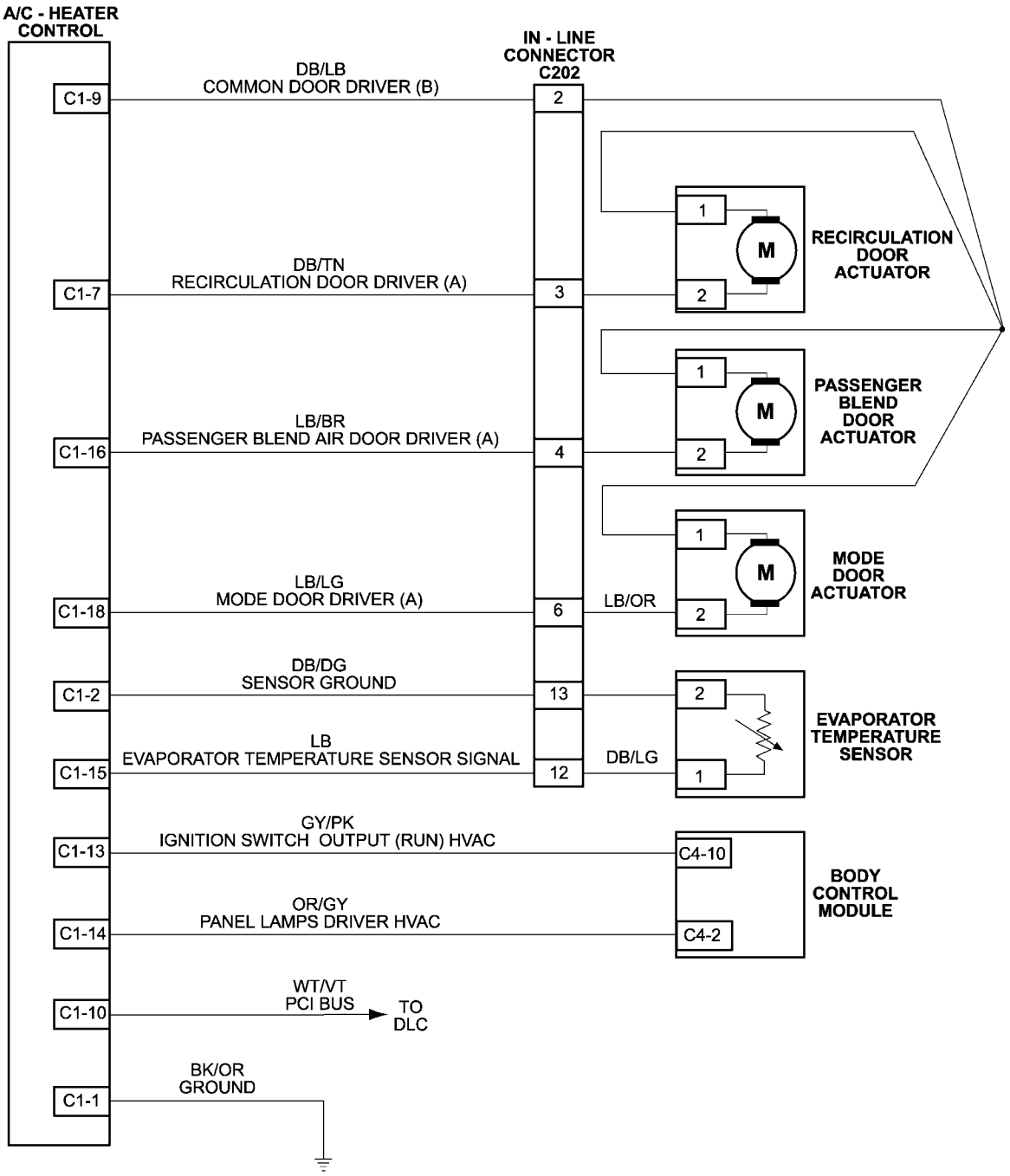

80f9dd78

10.12.2 BASE MANUAL TEMPERATURE CONTROL SYSTEM, RHD

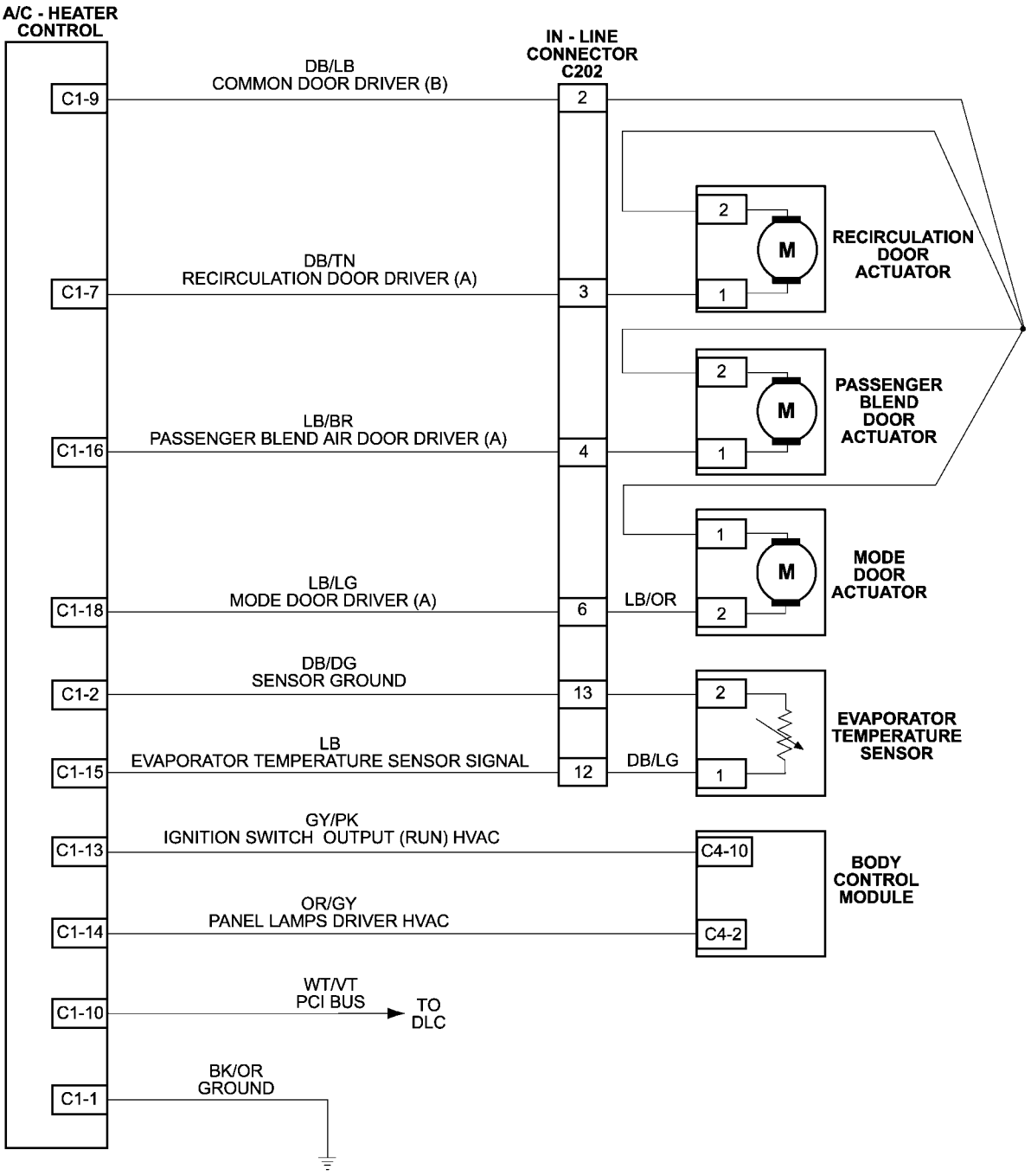

10.12 MANUAL TEMPERATURE CONTROLS (Continued)

10.12.3 DUAL-ZONE & THREE-ZONE (FRONT) MANUAL TEMPERATURE CONTROL SYSTEM, LHD

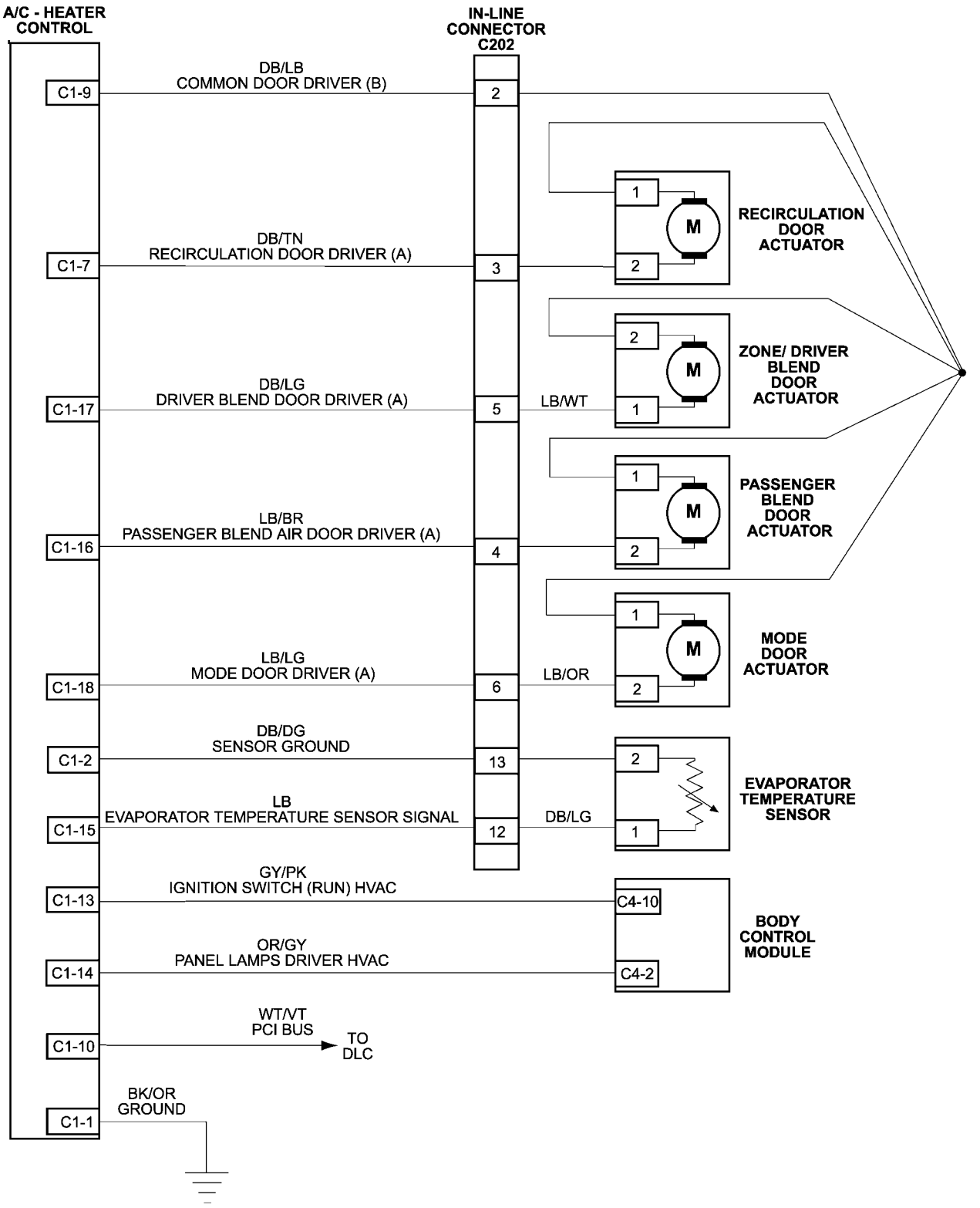

80f9ddad

10.12.4 DUAL-ZONE (FRONT) MANUAL TEMPERATURE CONTROL SYSTEM, RHD

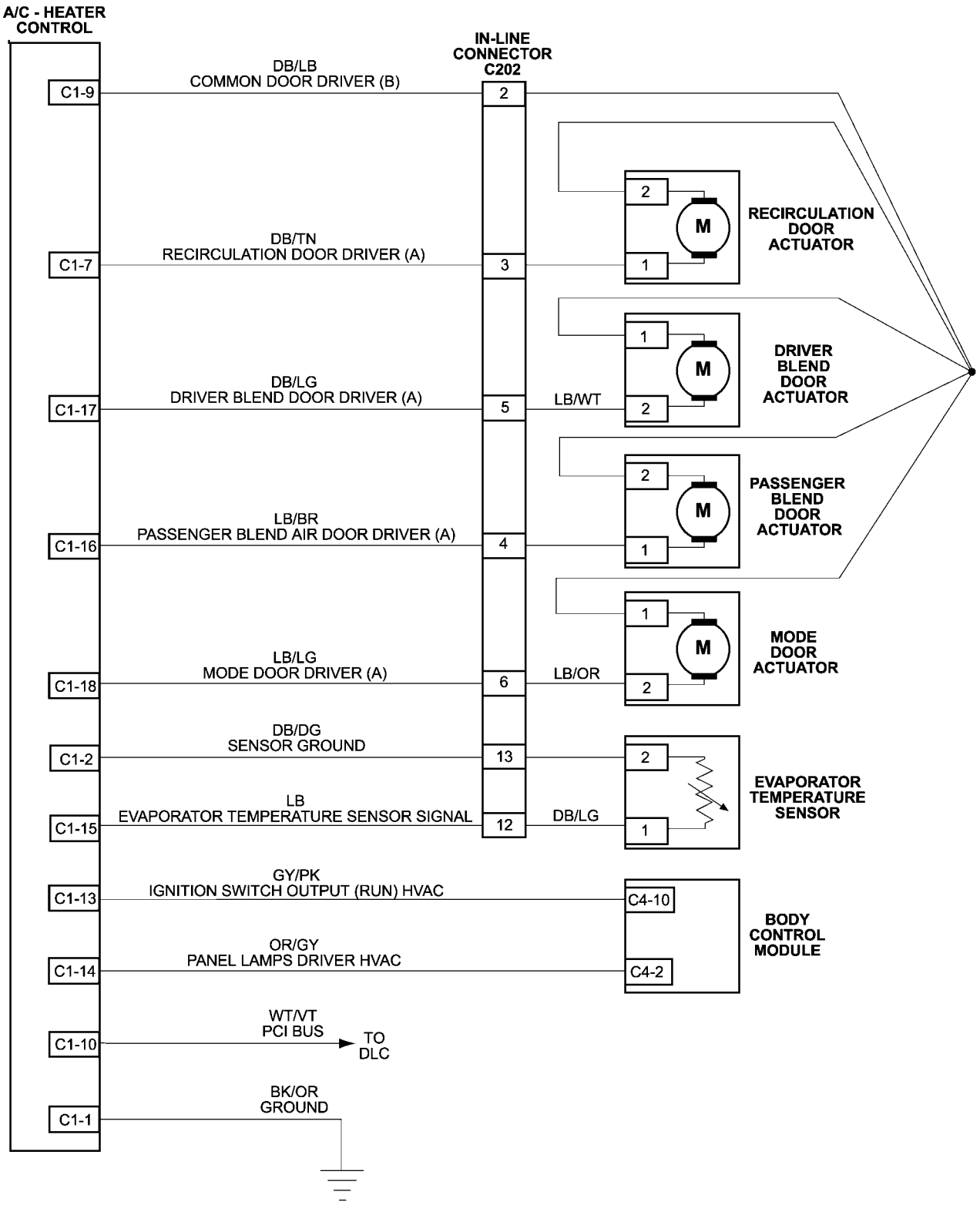

80f9ddd2

10.12 MANUAL TEMPERATURE CONTROLS (Continued)

10.12.5 THREE ZONE REAR MANUAL TEMPERATURE CONTROL SYSTEM

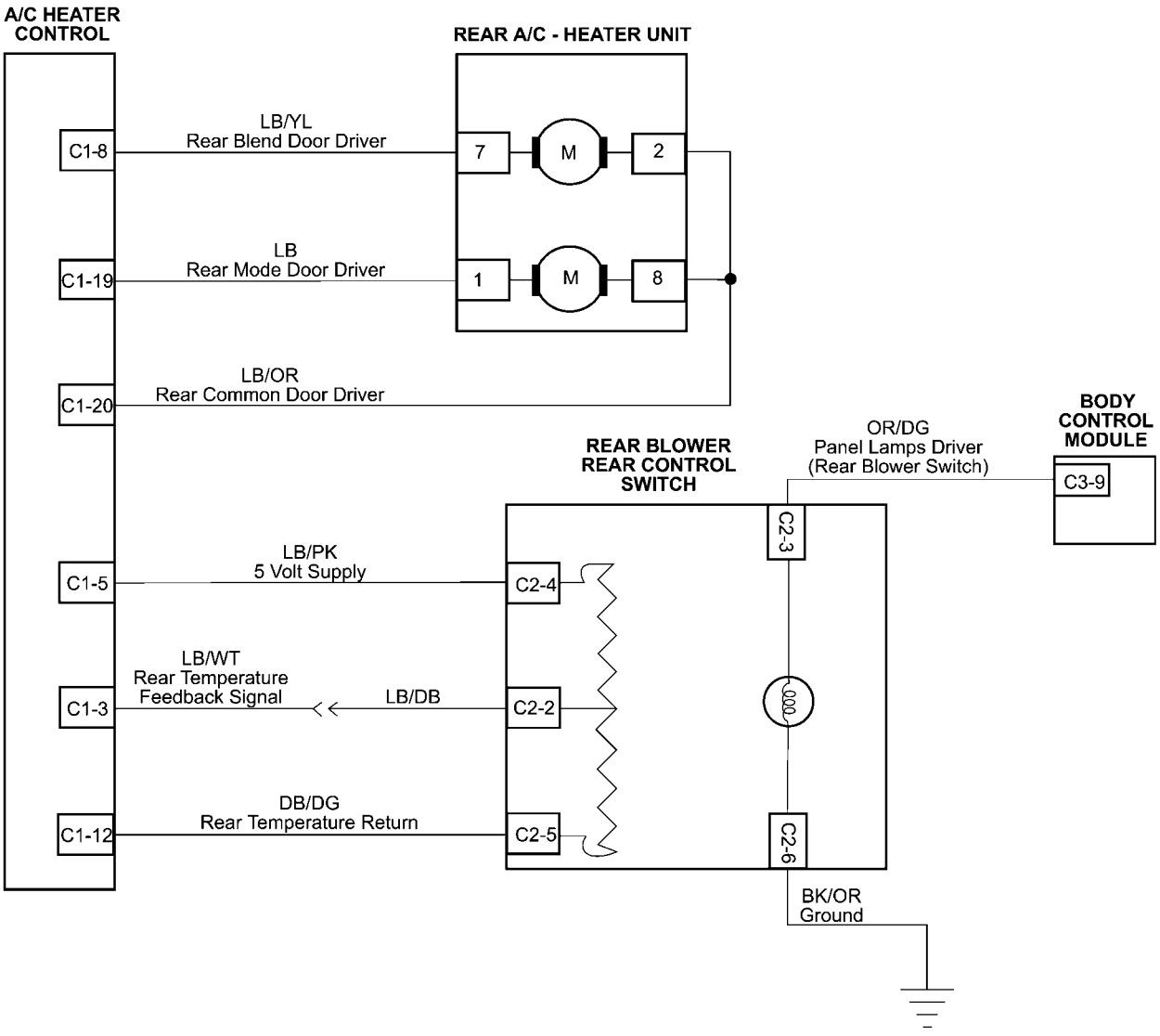

80d4e48b

10.12.6 FRONT BLOWER MOTOR - RS

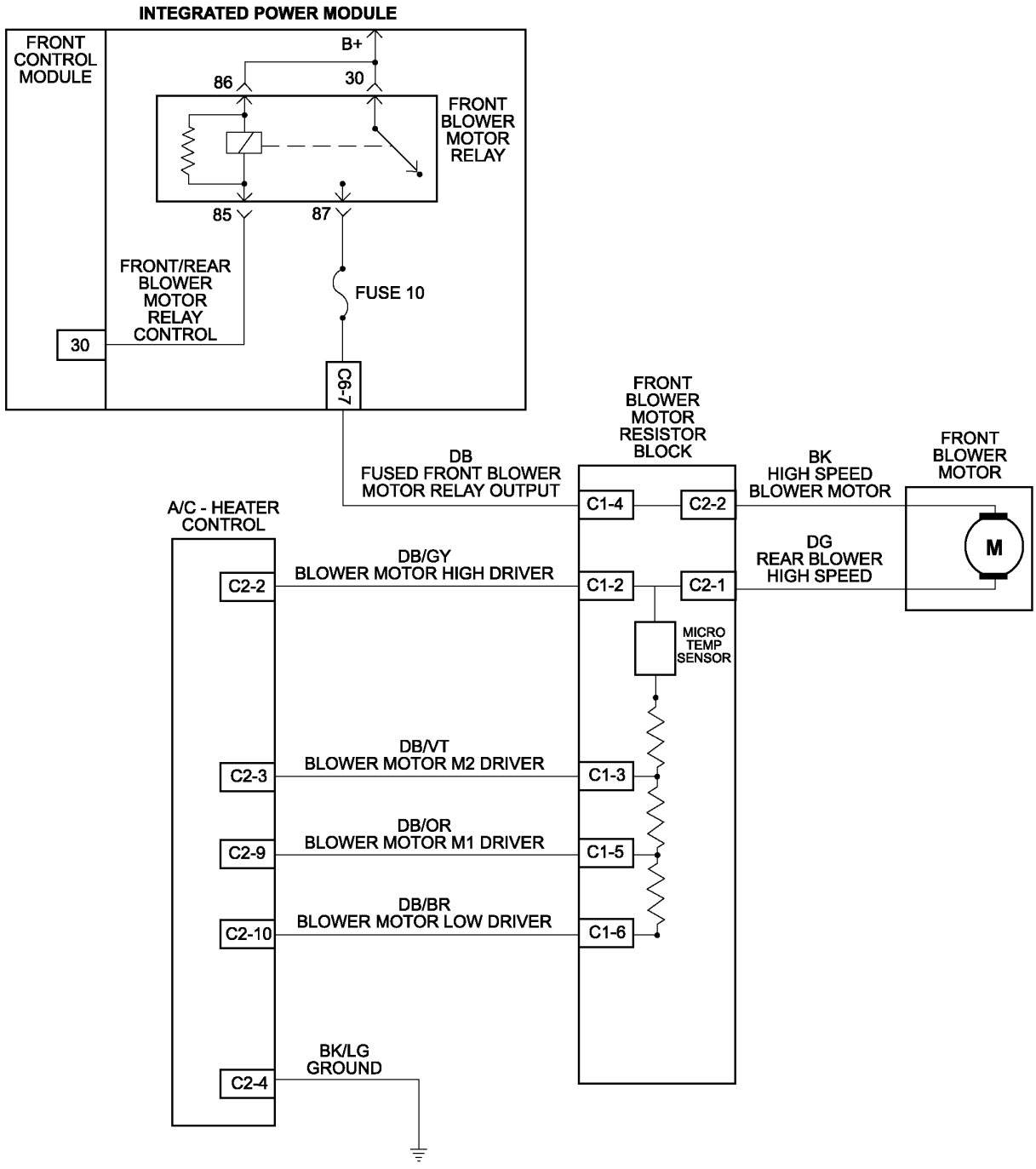

10.12 MANUAL TEMPERATURE CONTROLS (Continued)

10.12.7 FRONT BLOWER MOTOR - RG

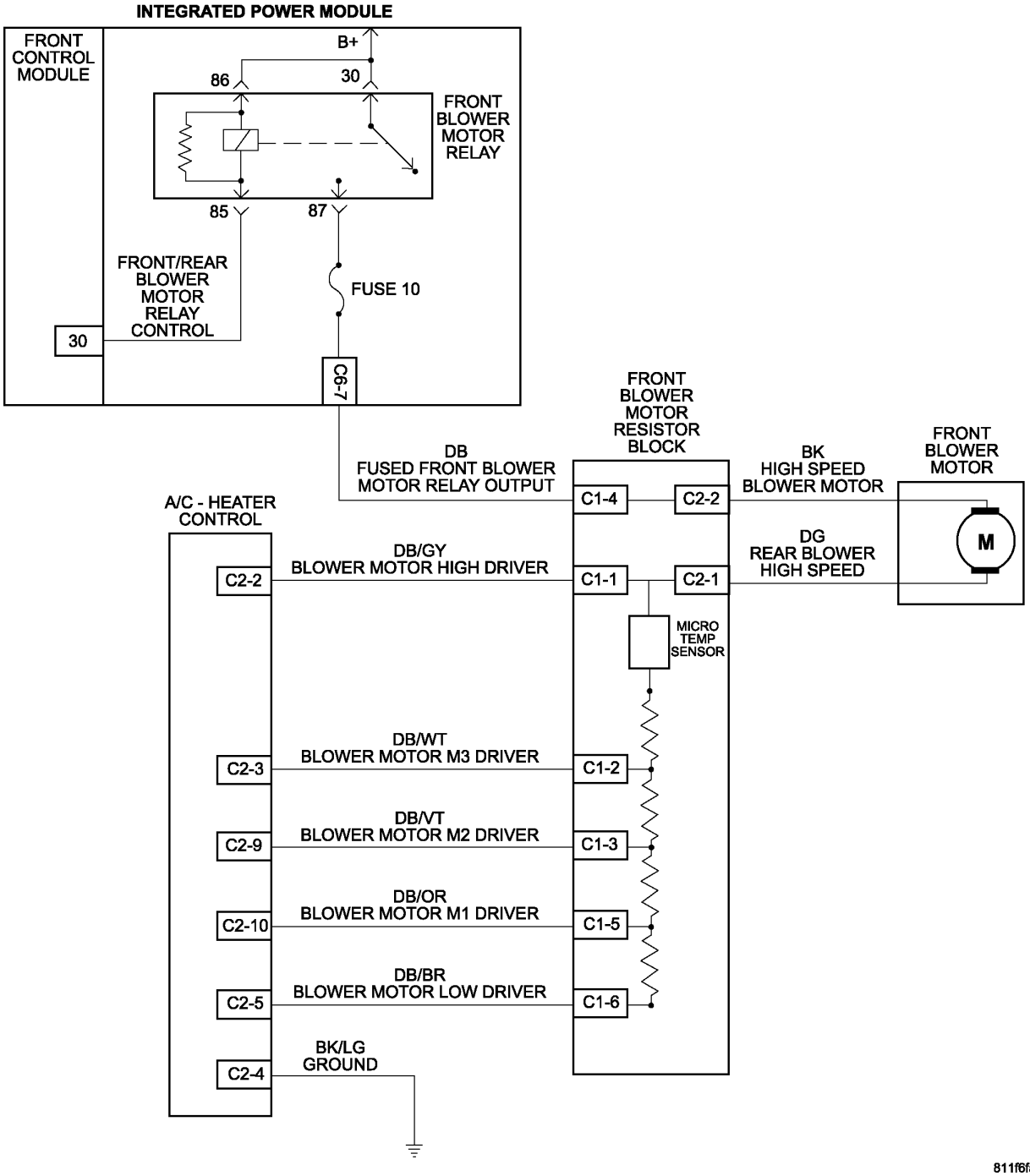

10.12.8 REAR BLOWER MOTOR

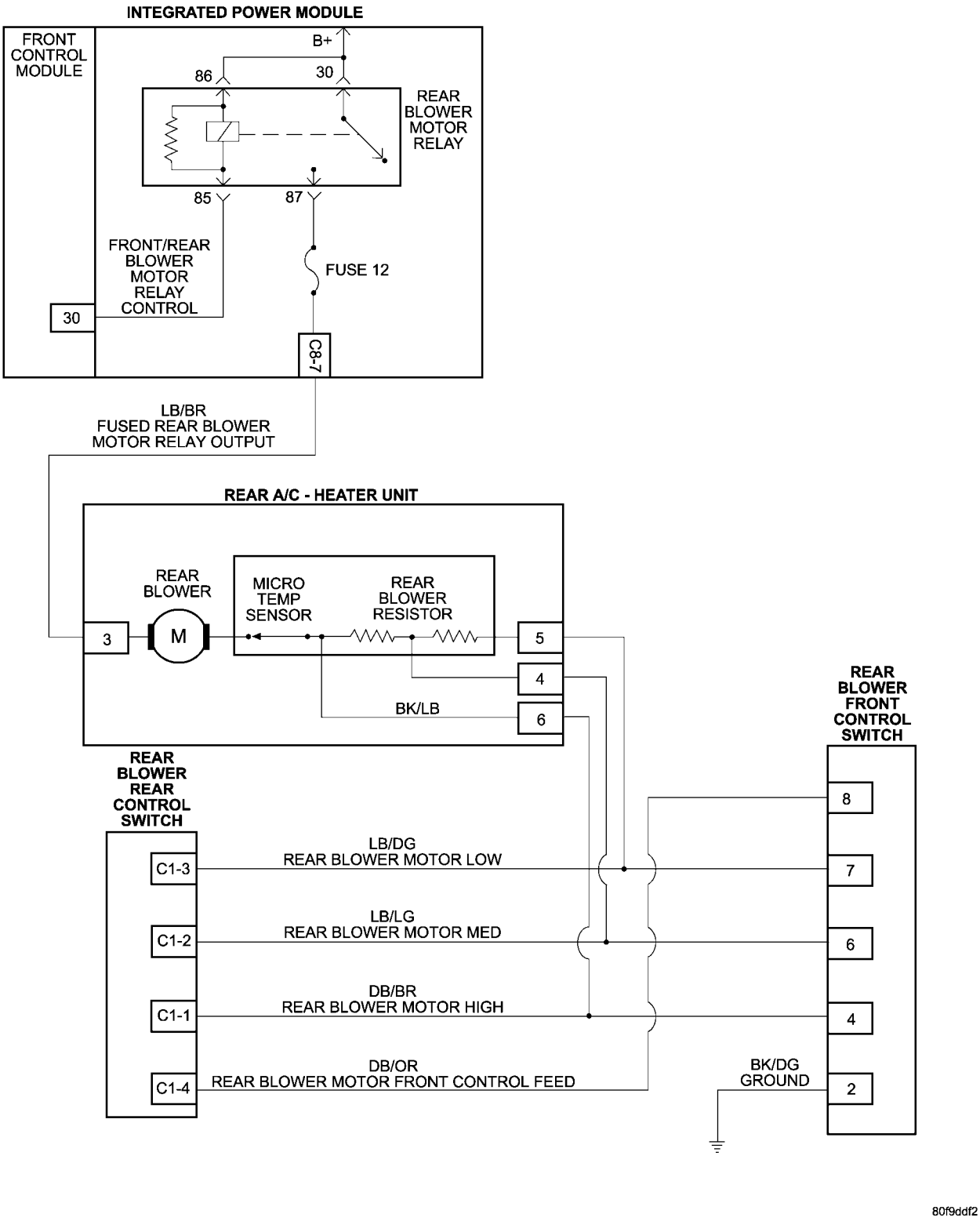

10.13 MEMORY SYSTEM

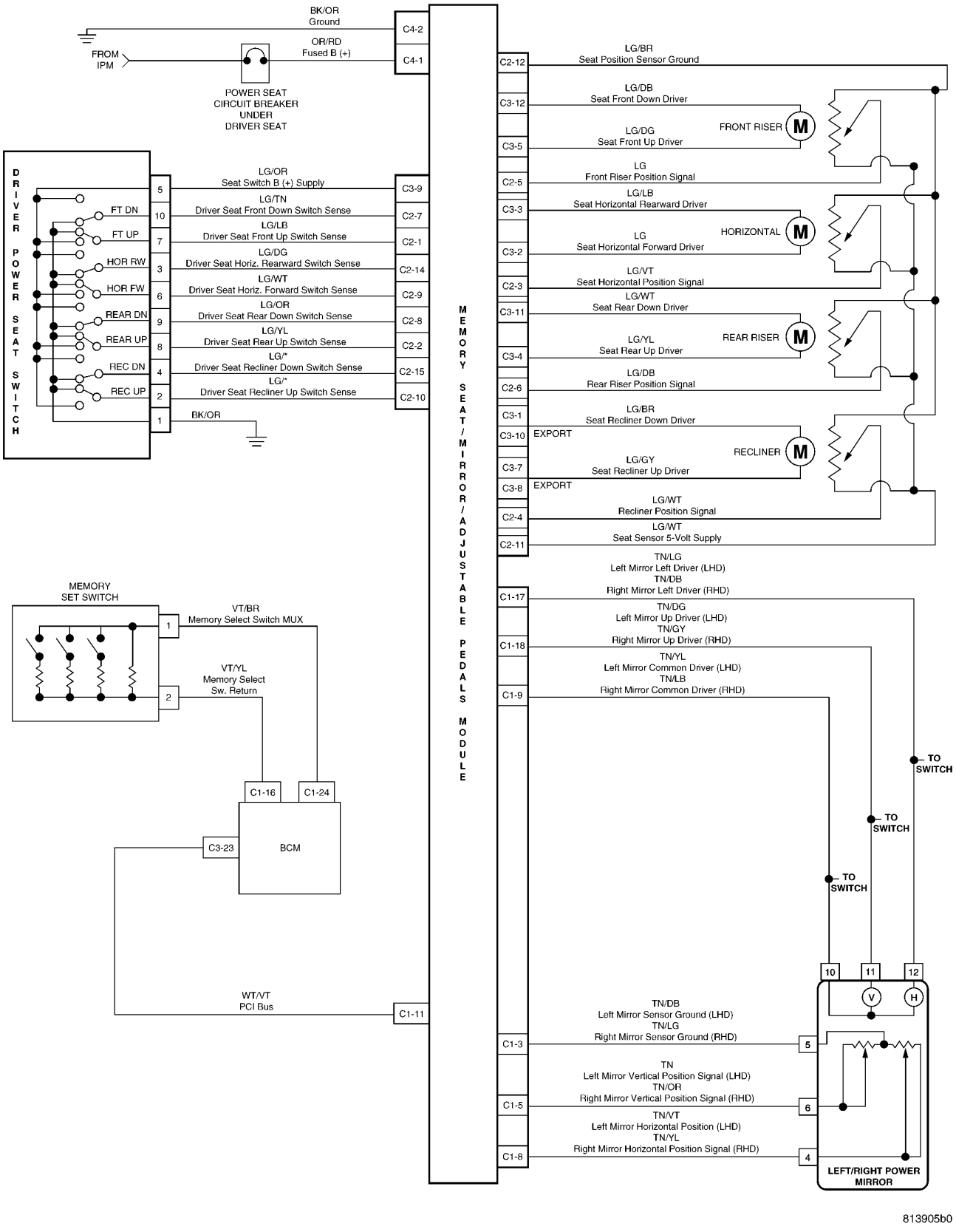

10.14 OVERHEAD CONSOLE

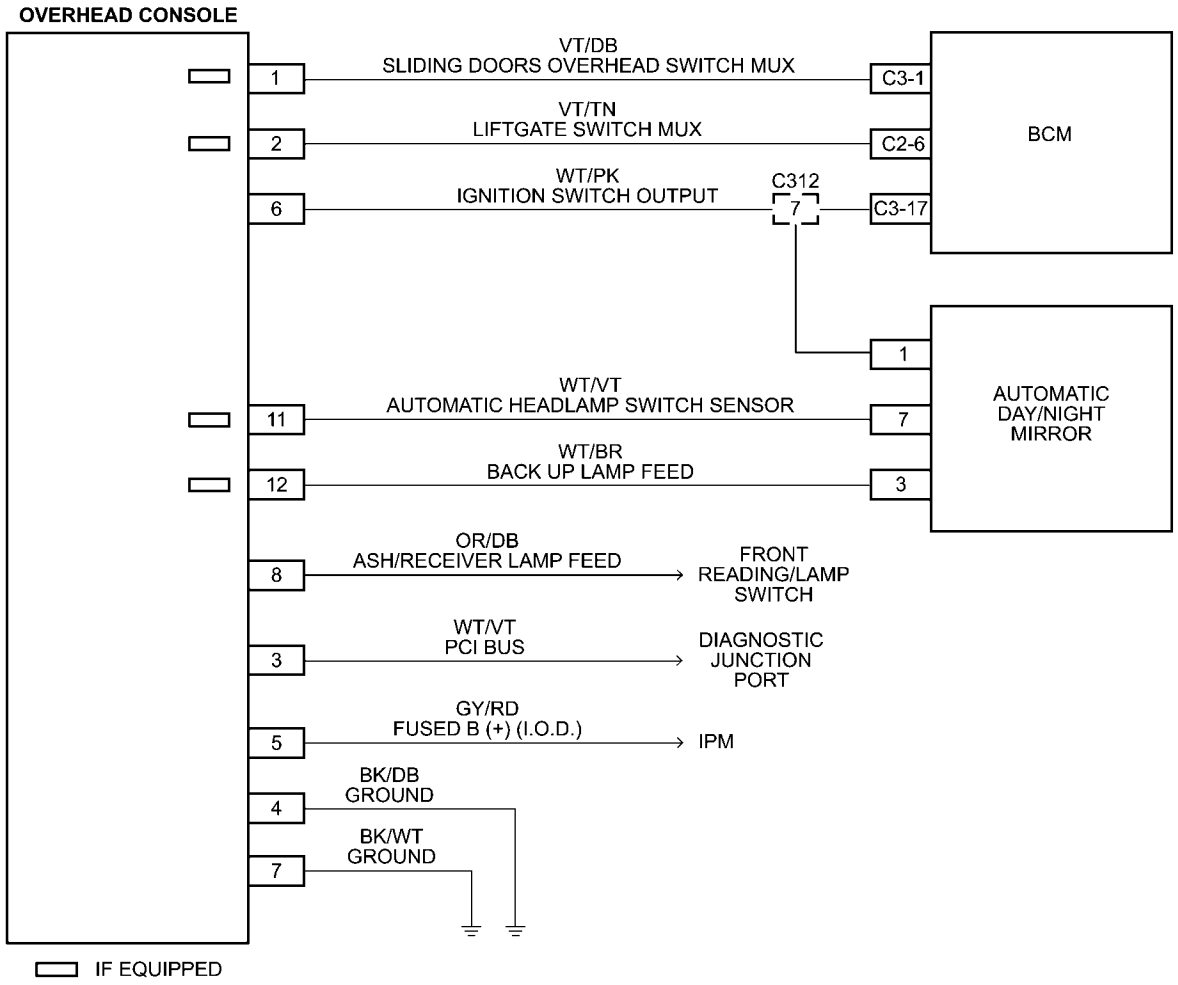

80af5332

10.15 PARK ASSIST

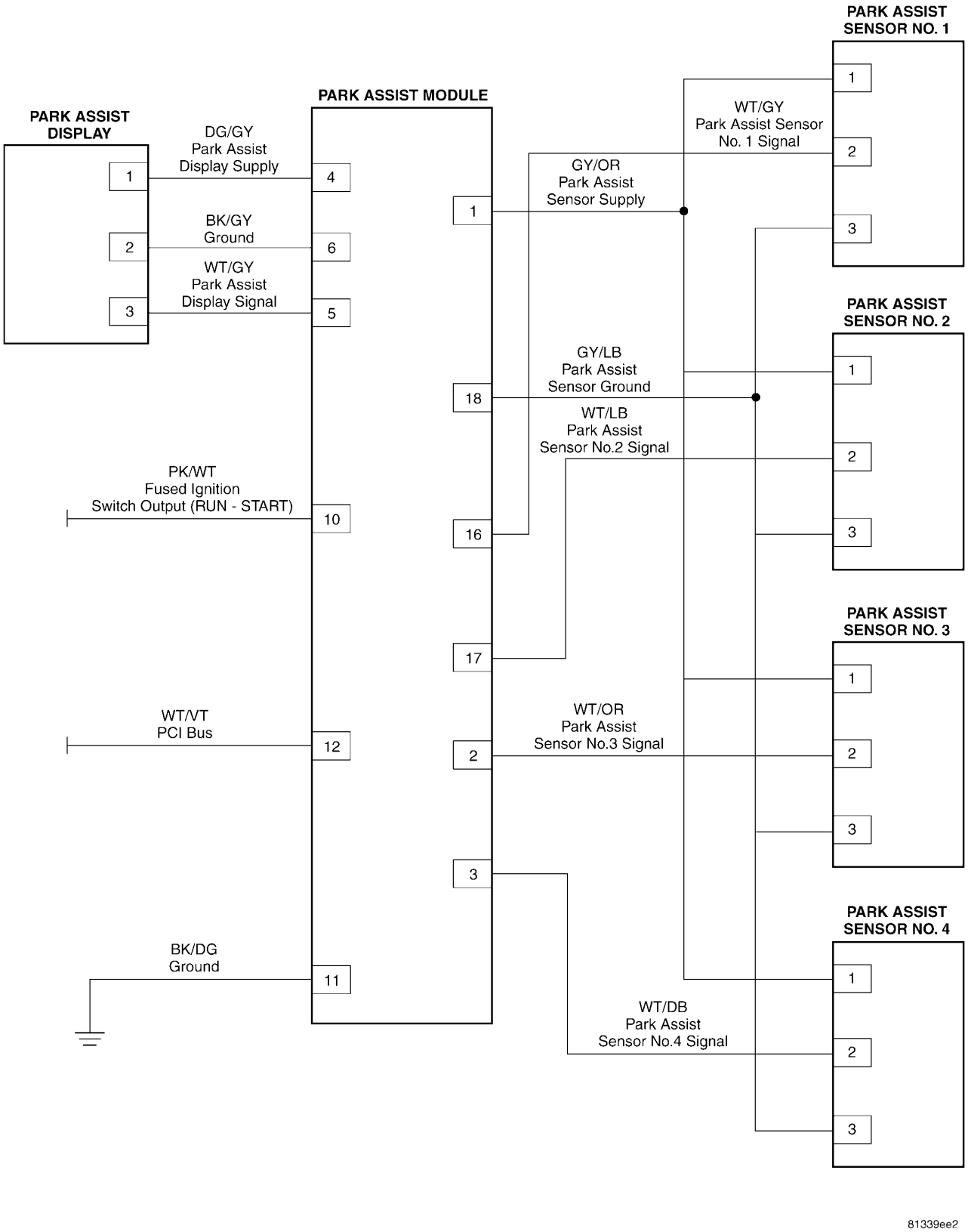

10.16 POWER DOOR LOCKS/RKE

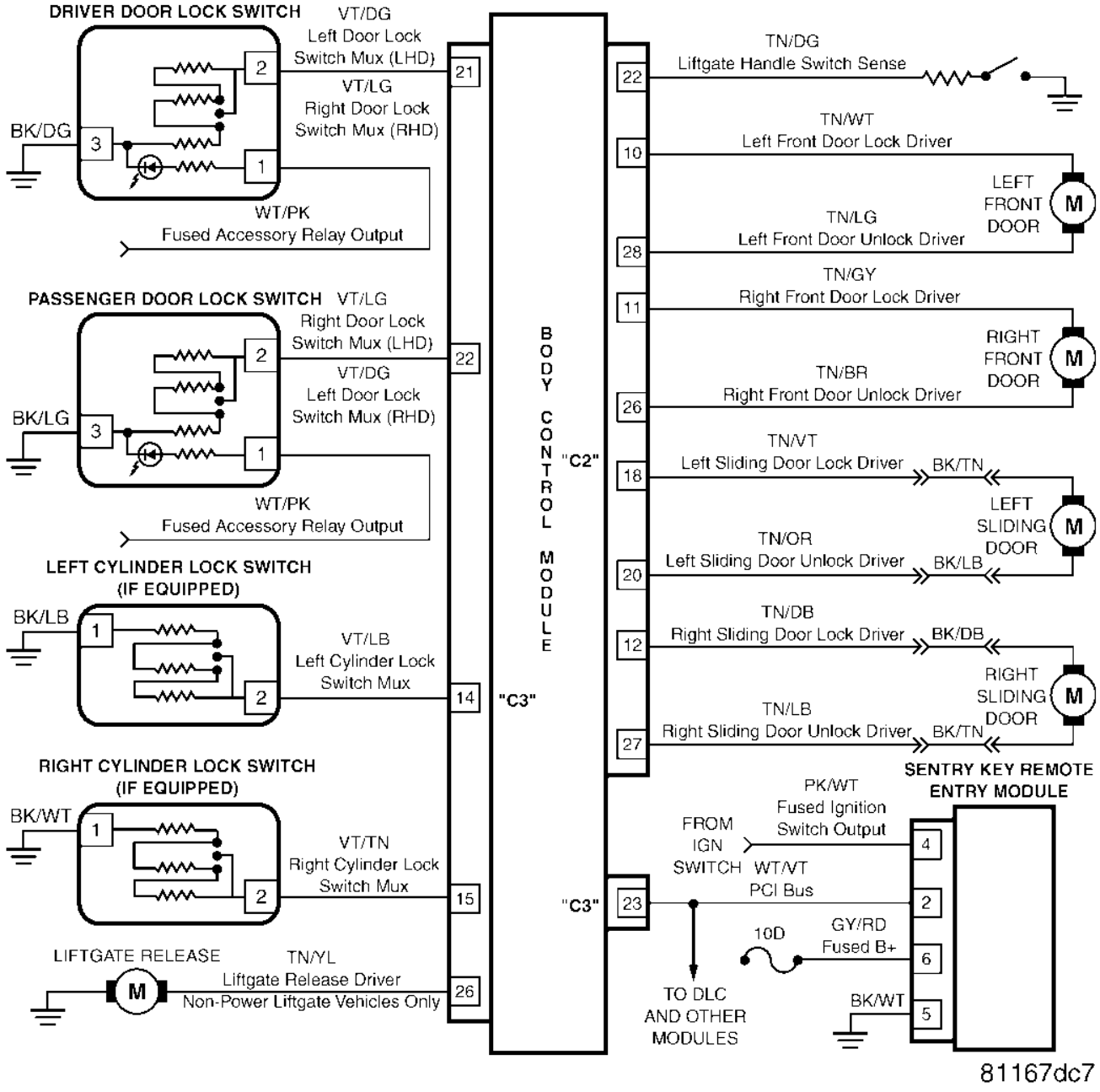

10.17 POWER FOLDING MIRROR

10.17.1 LHD (EXPORT ONLY)

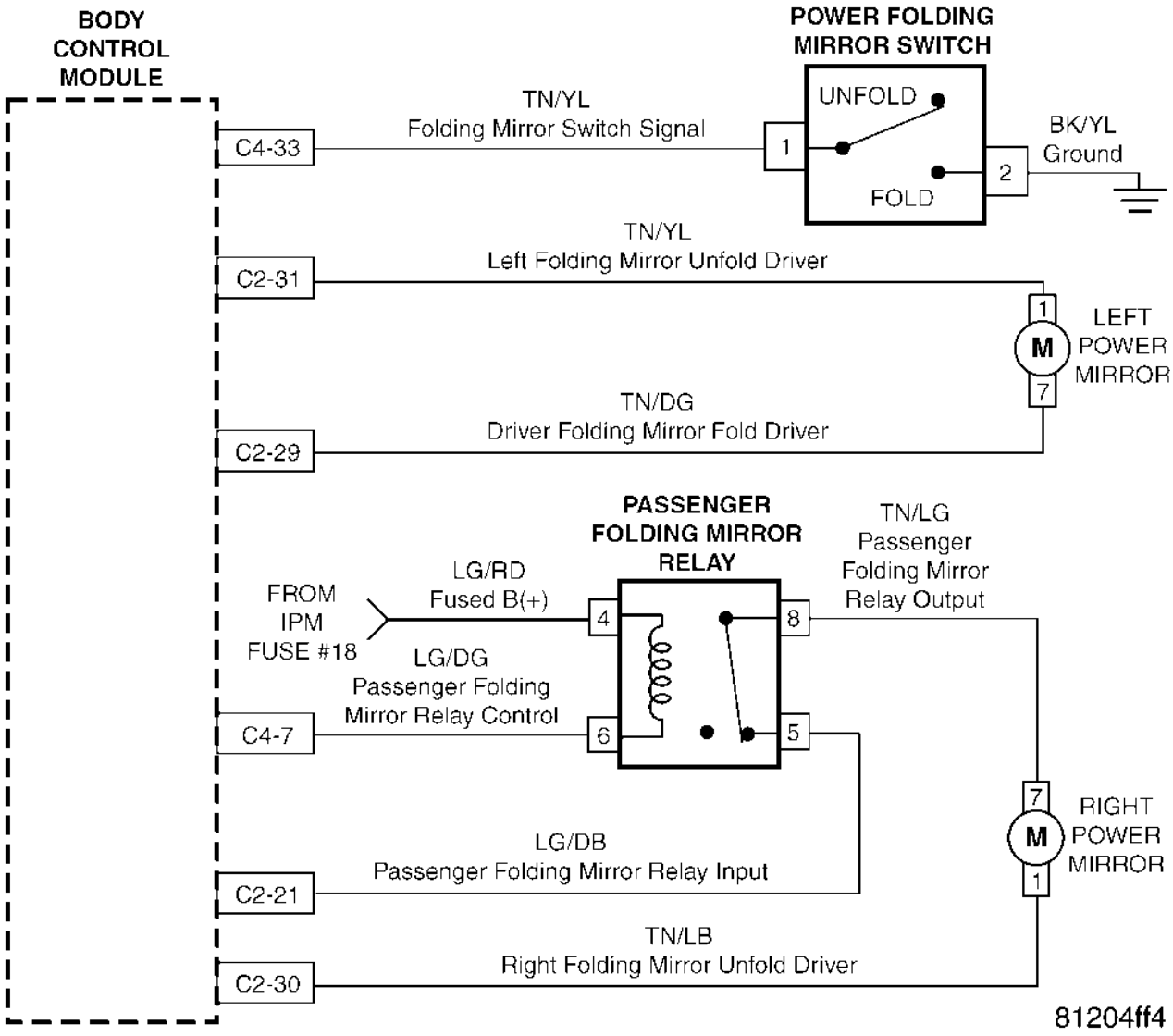

10.17.2 RHD (EXPORT ONLY)

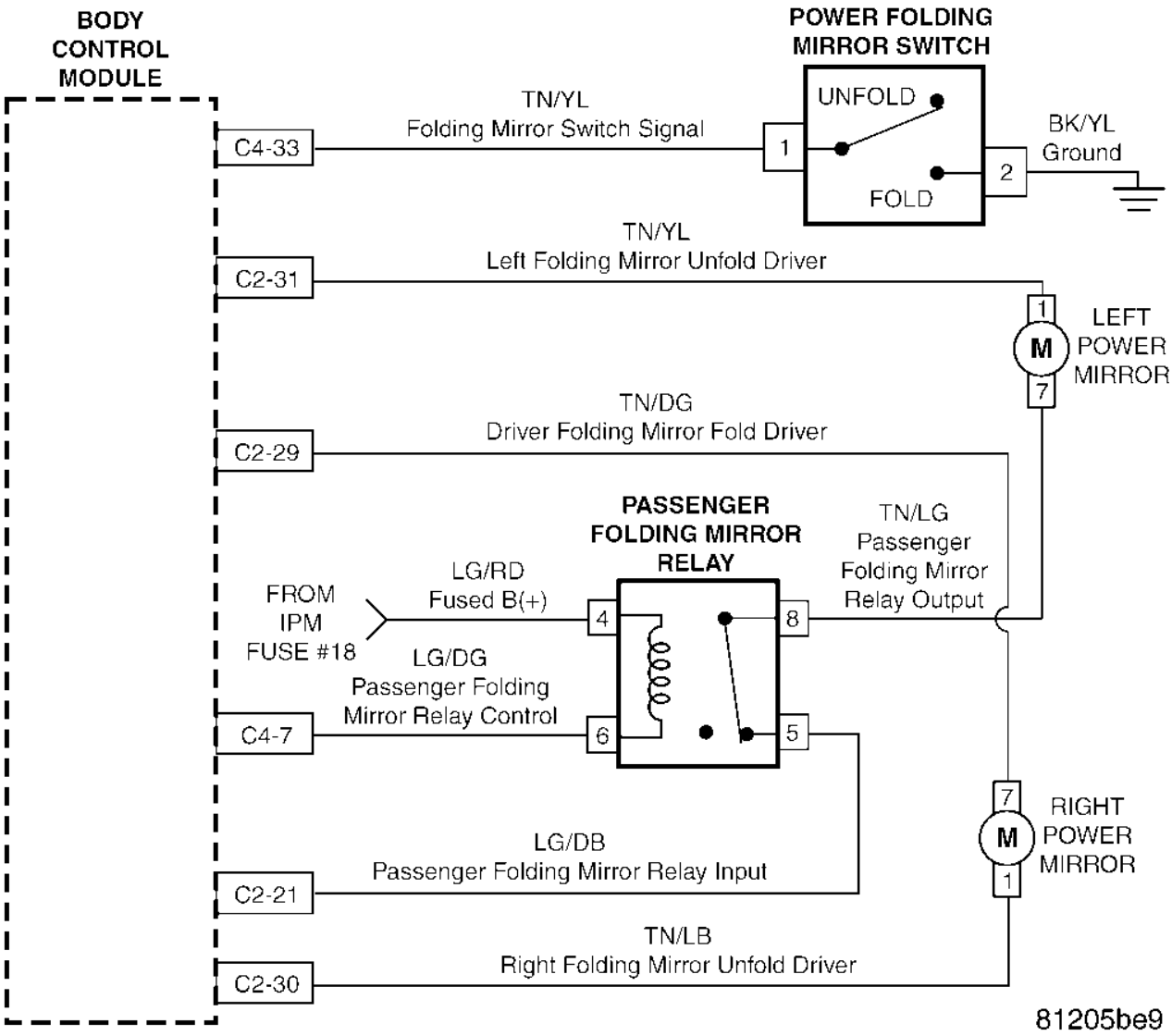

10.18 POWER LIFTGATE SYSTEM

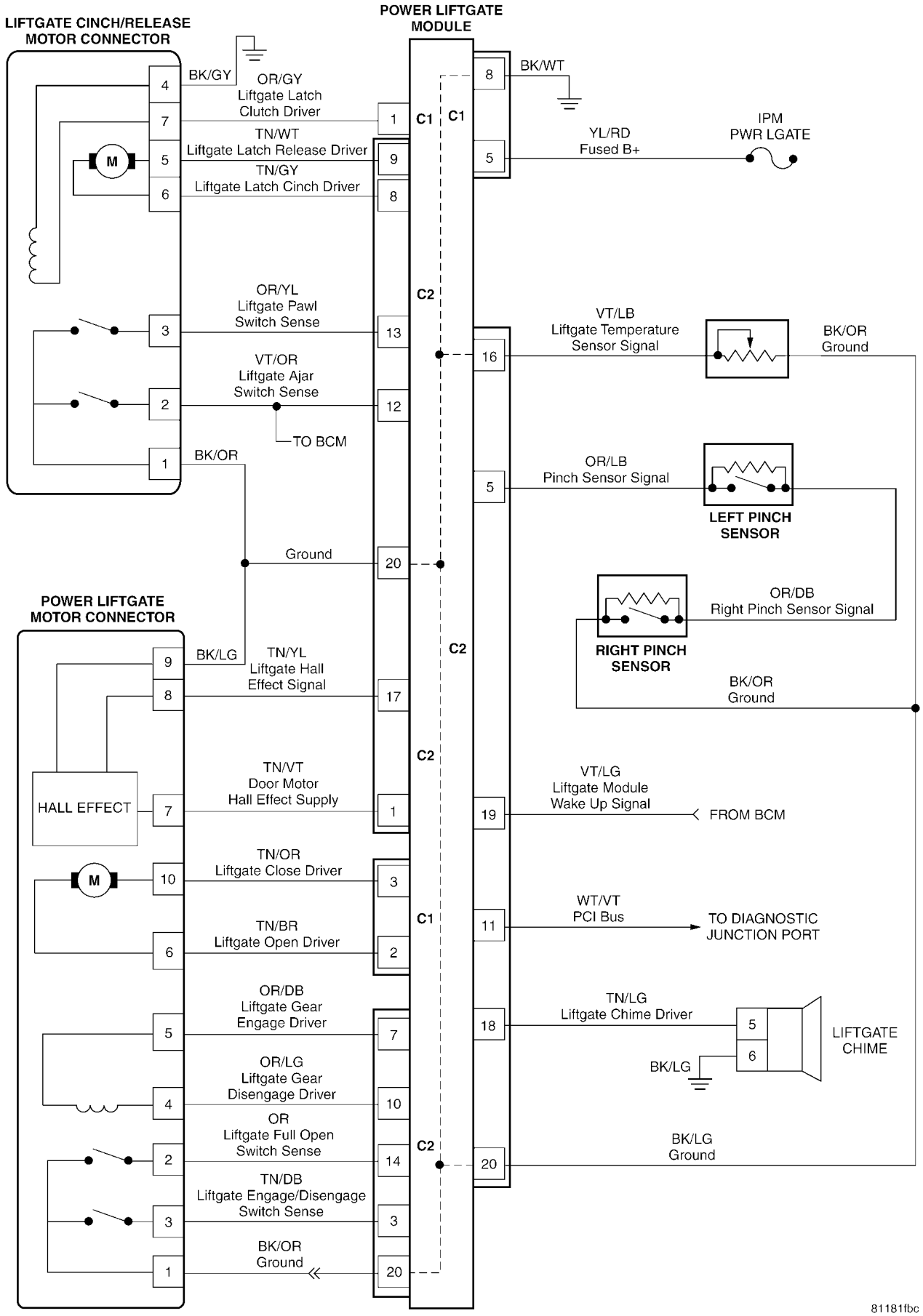

10.19 POWER SLIDING DOOR SYSTEM

10.19.1 LEFT POWER SLIDING DOOR

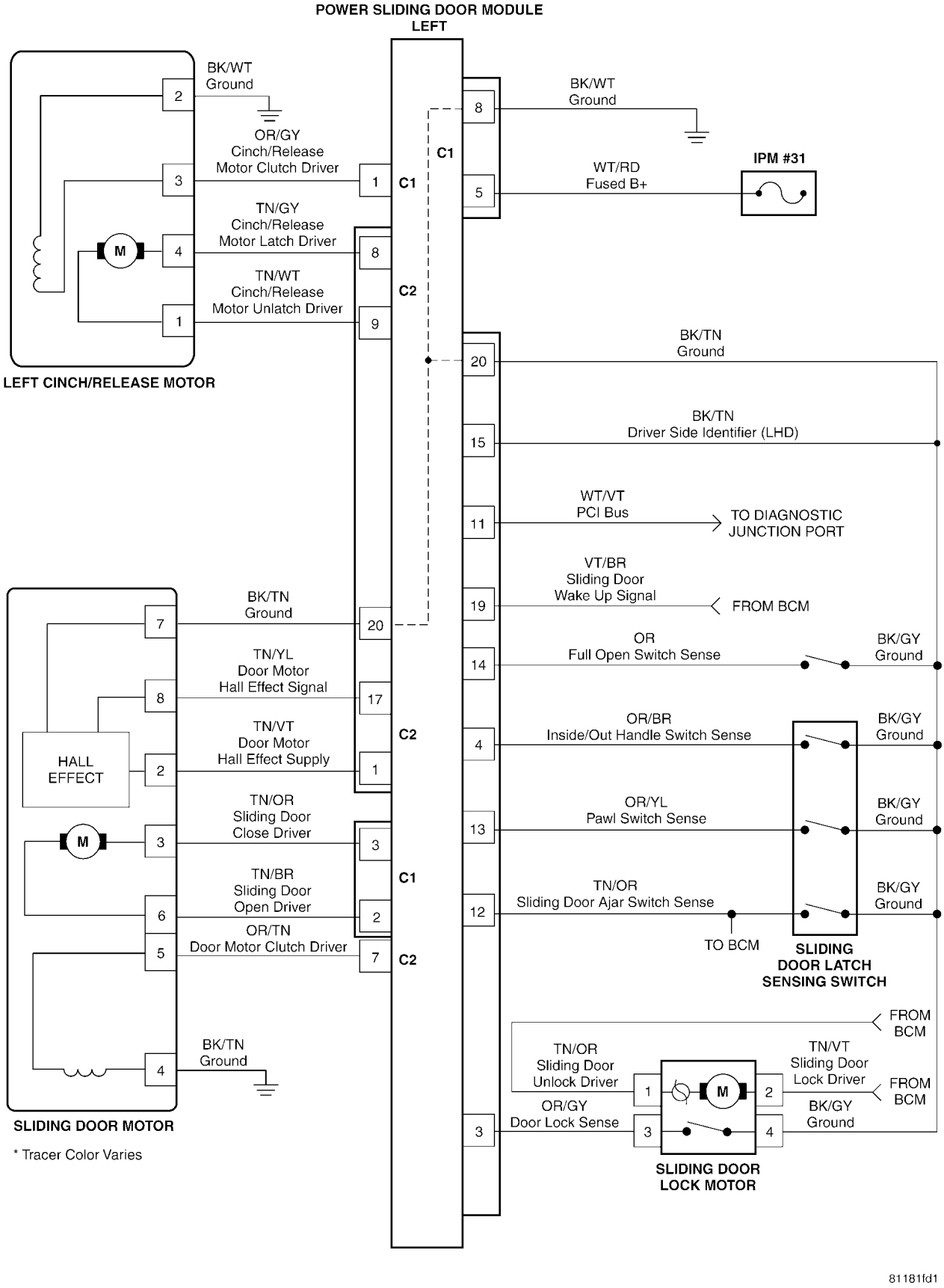

10.19 POWER SLIDING DOOR SYSTEM (Continued)

10.19.2 RIGHT POWER SLIDING DOOR

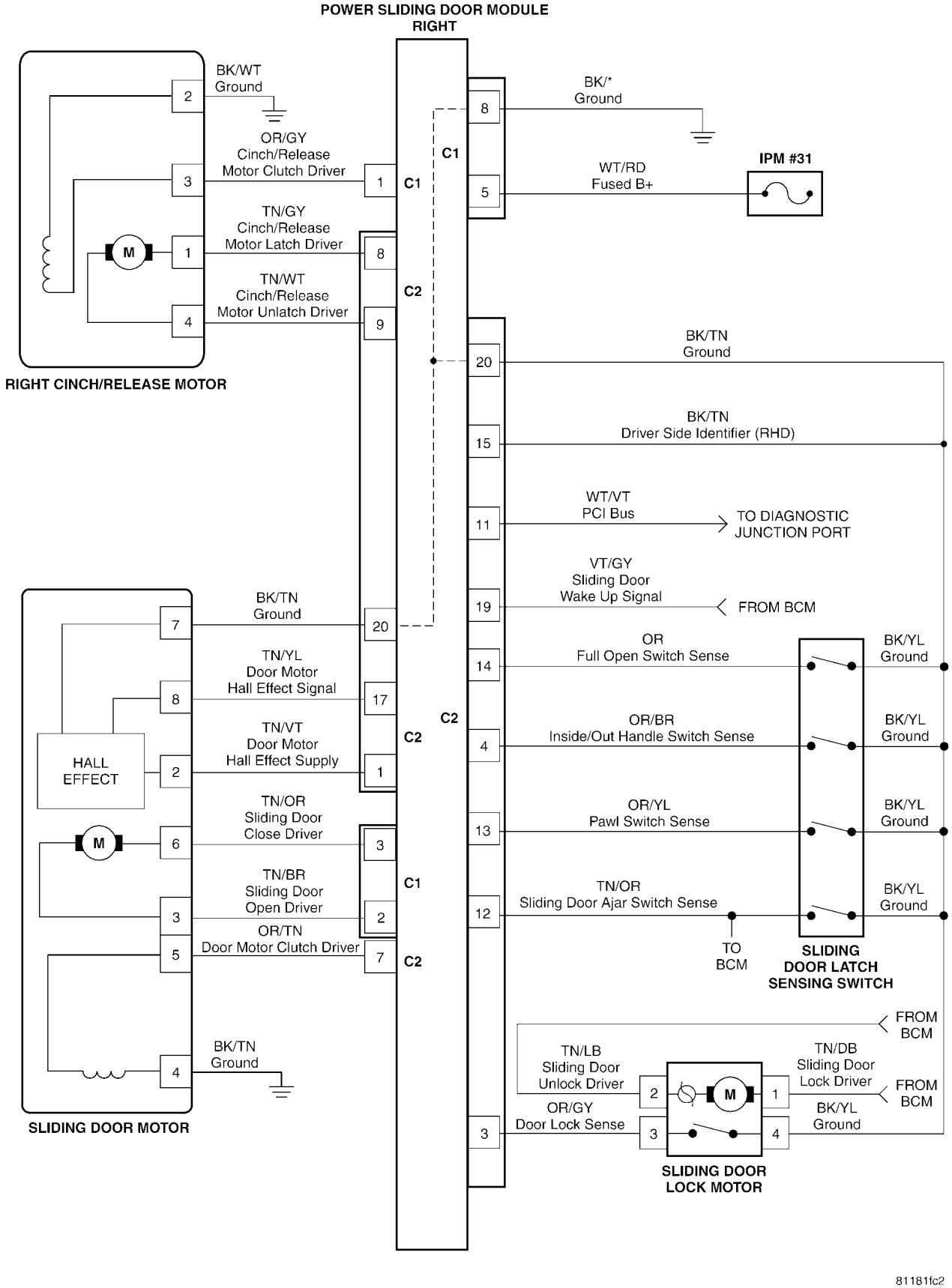

10.20 POWER SLIDING DOOR AND LIFTGATE SWITCHES

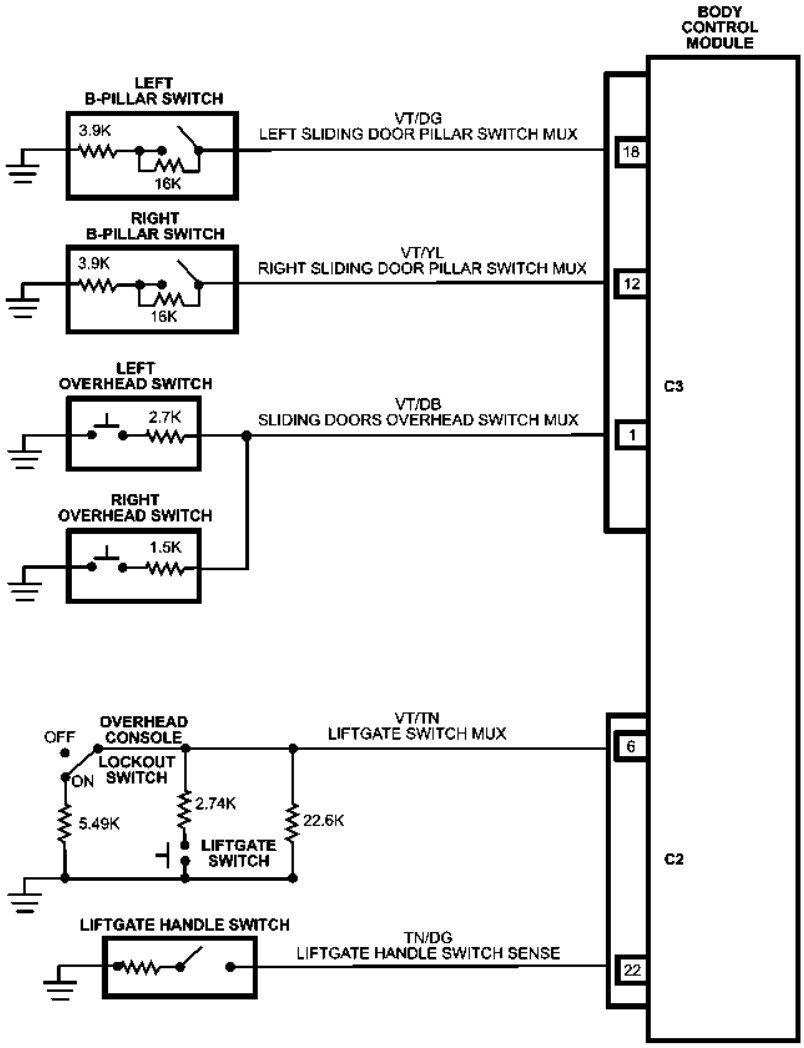

81167dce

10.21 REAR DEFOG/HEATED MIRROR

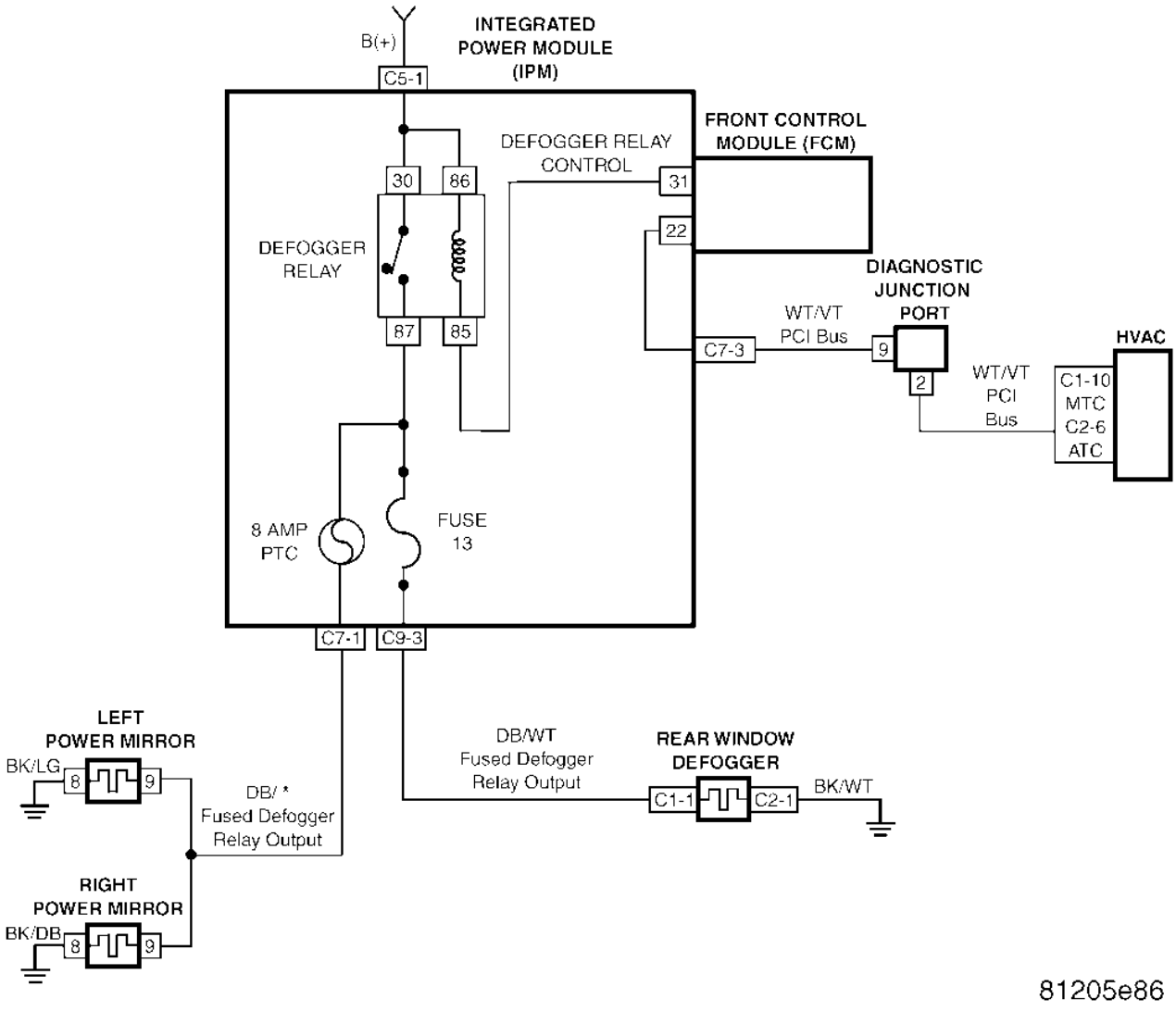

10.22 TELECOMMUNICATION

10.22.1 HANDS FREE PHONE - WITH CD CHANGER

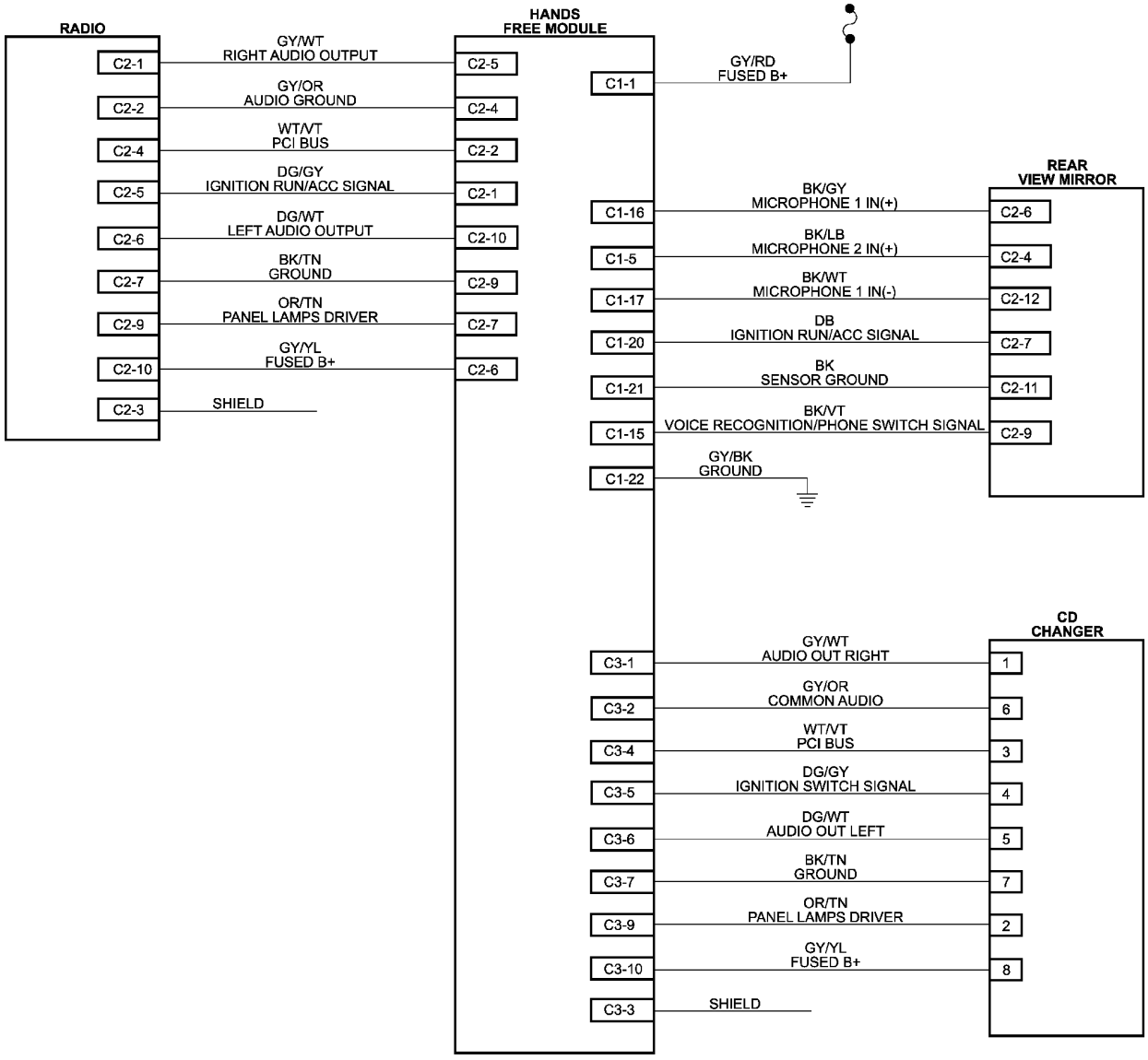

8133738c

10.22 TELECOMMUNICATION (Continued)

10.22.2 HANDS FREE PHONE - WITH DVD/CD CHANGER

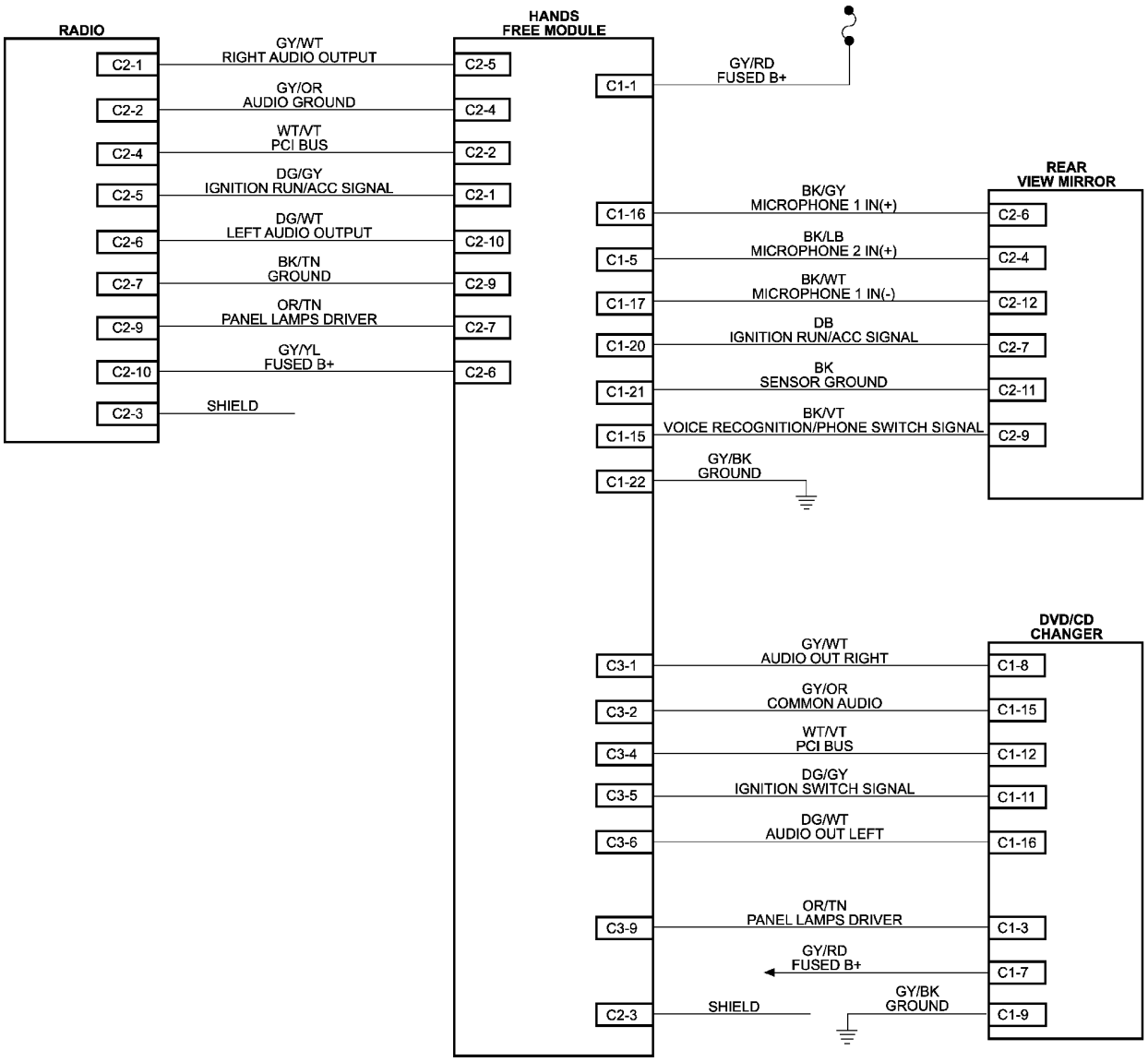

813373bb

10.23 VEHICLE THEFT SECURITY SYSTEM

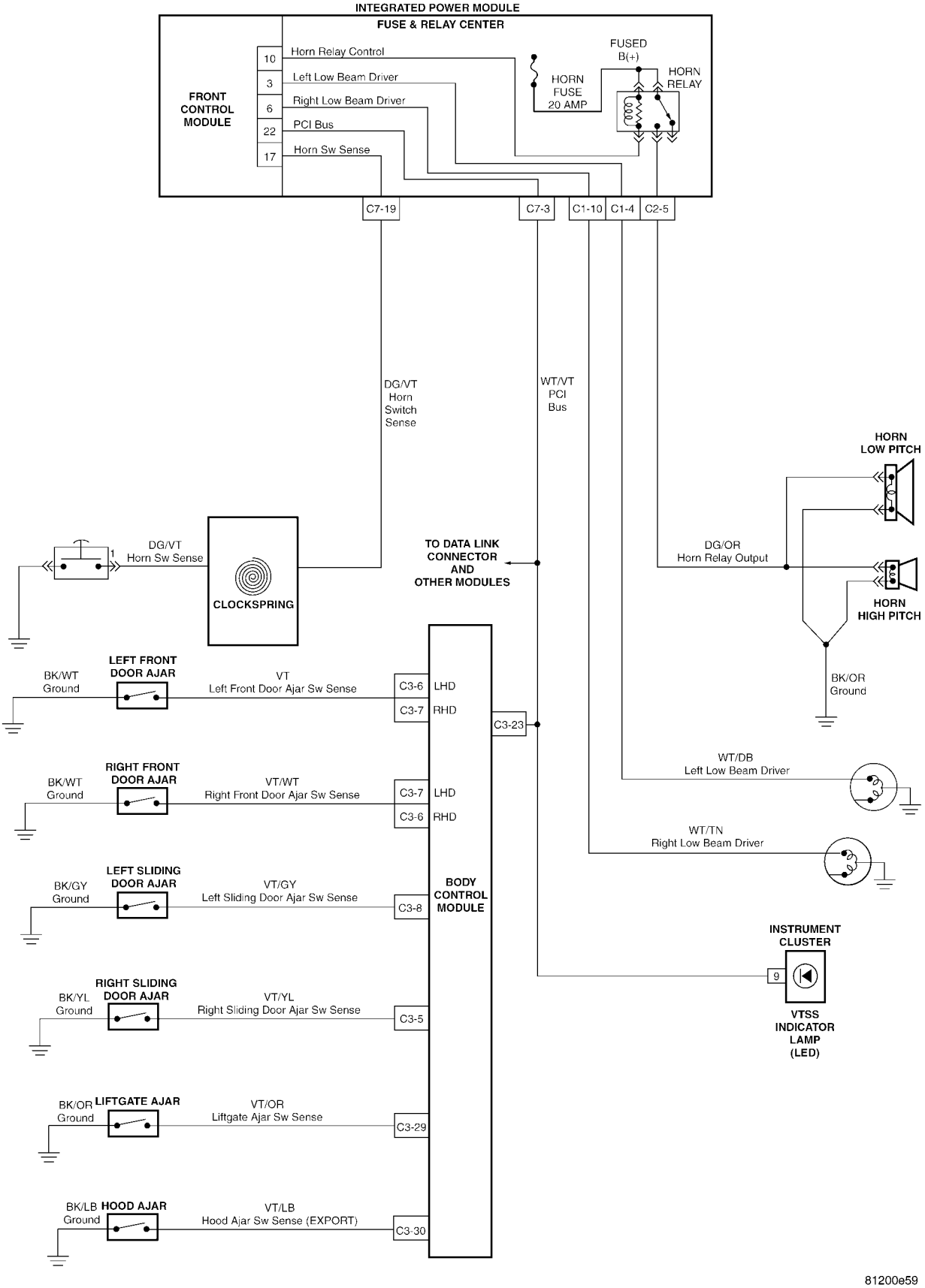

10.23 VEHICLE THEFT SECURITY SYSTEM (Continued)

10.23.1 THATCHAM ALARM SYSTEM (EXPORT ONLY)

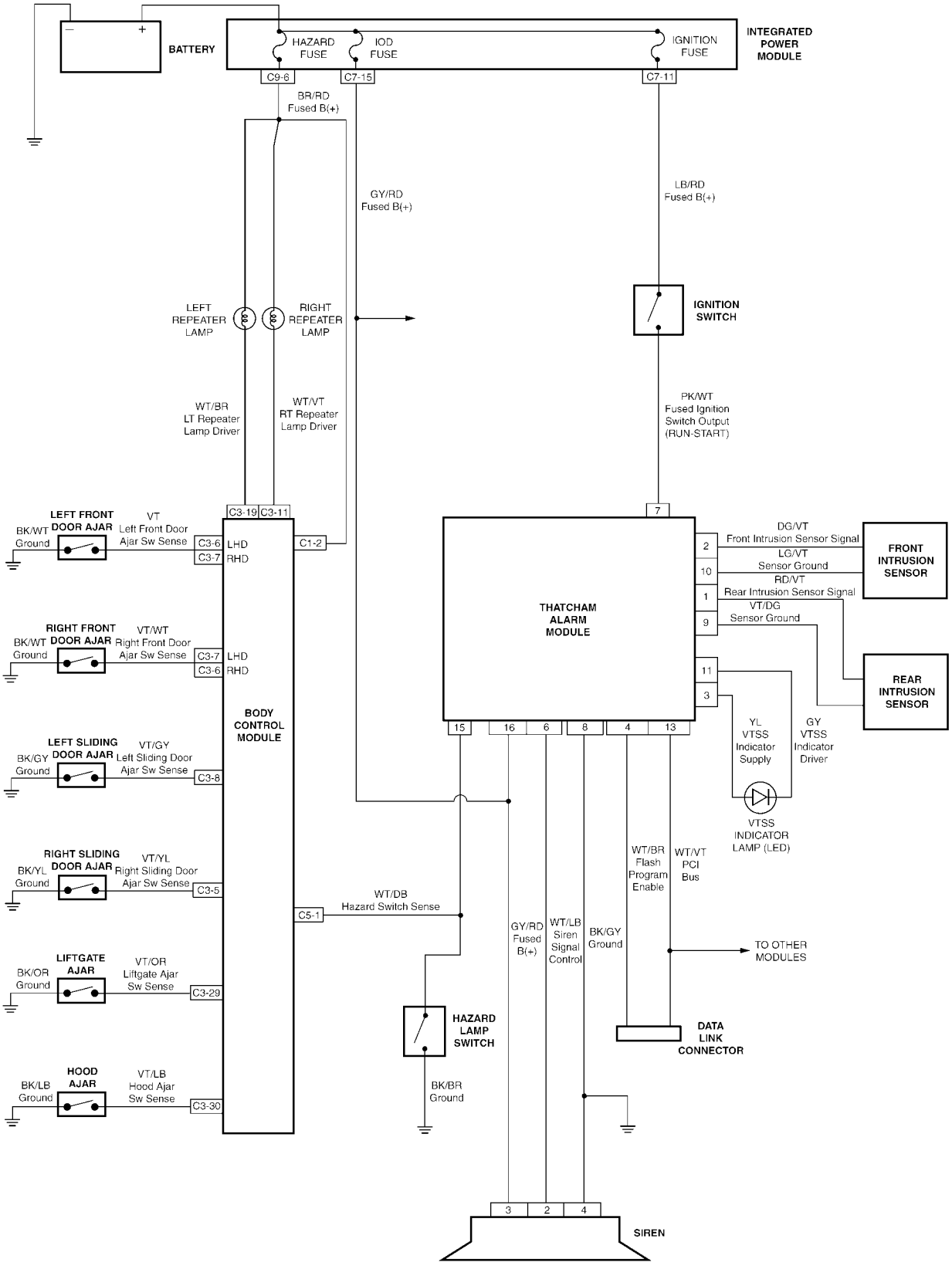

81204fc8

10.24 WIPERS - FRONT AND REAR

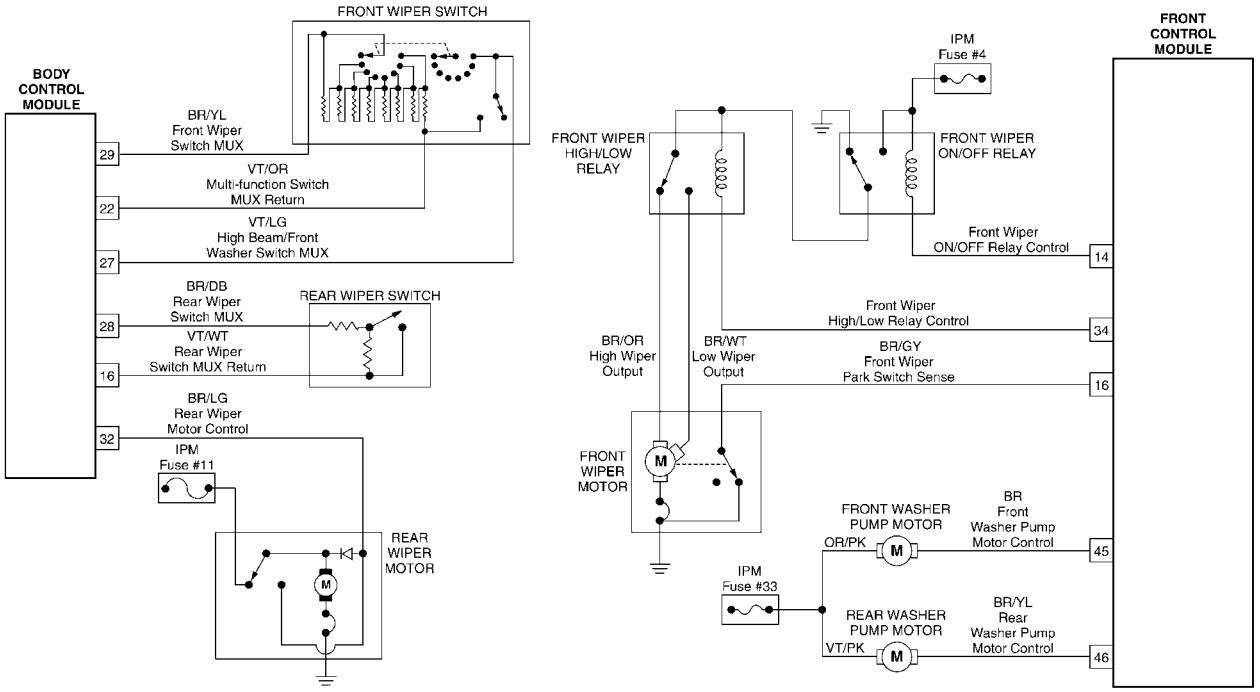

80a8a9ad

NOTES

11.0 CHARTS AND GRAPHS

11.1 KDB LAB SCOPE PATTERN

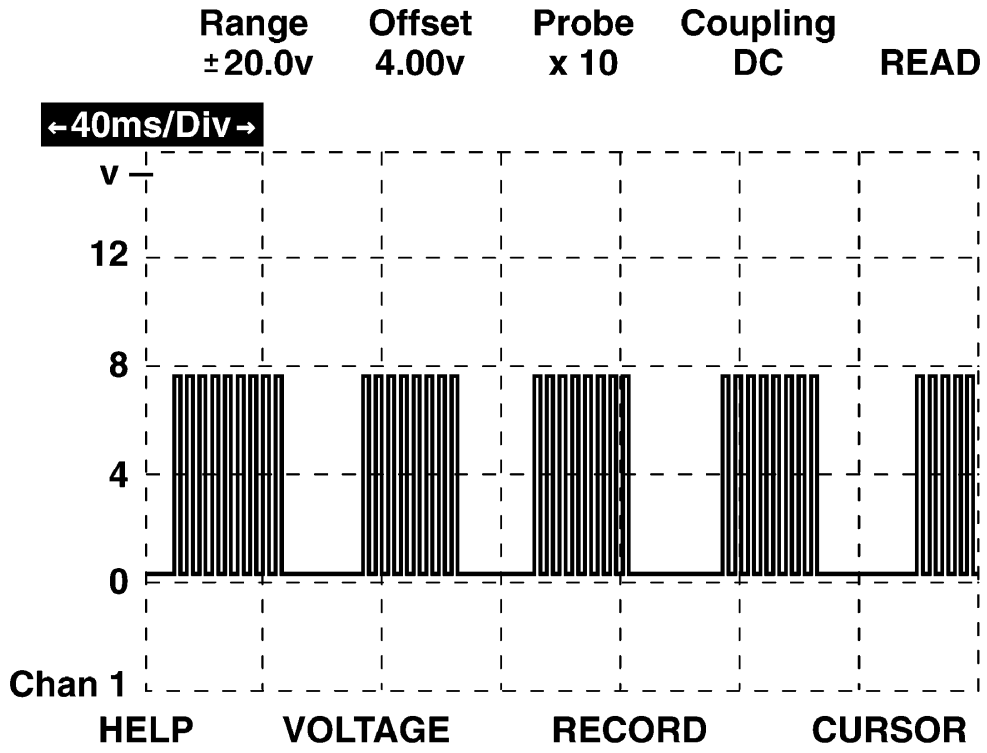

80afa153

11.2 PCI BUS LAB SCOPE PATTERN

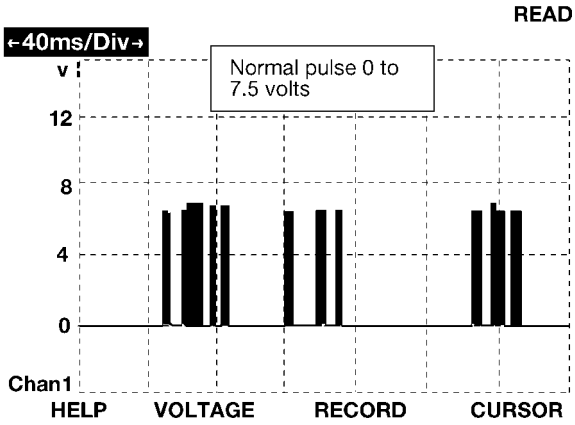

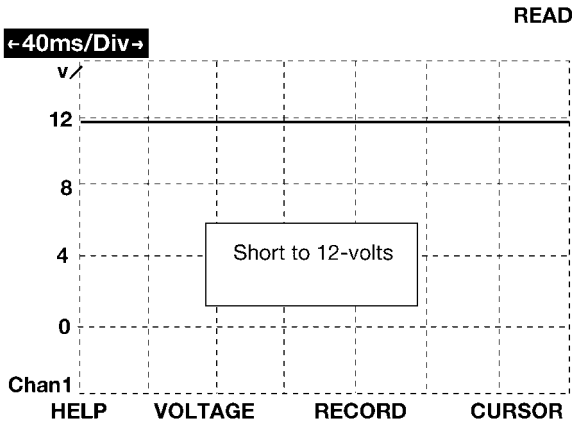

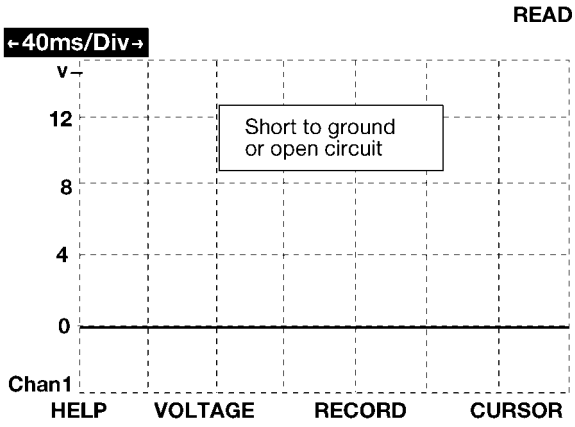

80bdbcf6