GROUP TAB LOCATOR

	Introduction
0	Lubrication & Maintenance
2	Suspension
3	Differential & Driveline
5	Brakes
7	Cooling
8A	Audio
8B	Chime/Buzzer
8E	Electronic Control Modules
8F	Engine Systems
8G	Heated Systems
8H	Horn
8I	Ignition Control
8J	Instrument Cluster
8L	Lamps
8M	Message Systems
8N	Power Systems
8O	Restraints
8P	Speed Control
8Q	Vehicle Theft Security
8R	Wipers/Washers
8T	Navigation/Telecommunication
8W	Wiring
9	Engine
11	Exhaust System
13	Frame & Bumpers
14	Fuel System
19	Steering
21	Transmission/Transaxle
22	Tires/Wheels
23	Body
24	Heating & Air Conditioning
25	Emissions Control
	Component and System Index

Service Manual Comment Forms (Rear of Manual)

INTRODUCTION

TABLE OF CONTENTS

page

BODY CODE PLATE
DESCRIPTION 1
FASTENER IDENTIFICATION
DESCRIPTION 2
FASTENER USAGE
DESCRIPTION
FASTENER USAGE 5
THREADED HOLE REPAIR 5
INTERNATIONAL SYMBOLS
DESCRIPTION 5
METRIC SYSTEM
DESCRIPTION 6

page

TORQUE REFERENCES
DESCRIPTION 8
VEHICLE IDENTIFICATION NUMBER
DESCRIPTION 9
VEHICLE CERTIFICATION LABEL
DESCRIPTION 11
E-MARK LABEL
DESCRIPTION 11
VECI LABEL
DESCRIPTION 11
MANUFACTURER PLATE
DESCRIPTION 11

BODY CODE PLATE

DESCRIPTION

The Body Code Plate (Fig. 1) is located in the engine compartment on the radiator closure panel crossmember. There are seven lines of information on the body code plate. Lines 4, 5, 6, and 7 are not used to define service information. Information reads from left to right, starting with line 3 in the center of the plate to line 1 at the bottom of the plate.

BODY CODE PLATE – LINE 3

DIGITS 1 THROUGH 12

Vehicle Order Number

DIGITS 13 THROUGH 17

Open Space

DIGITS 18 AND 19

Vehicle Shell Line

- RS

DIGIT 20

Carline

FWD

- K = Dodge
- Y = Chrysler

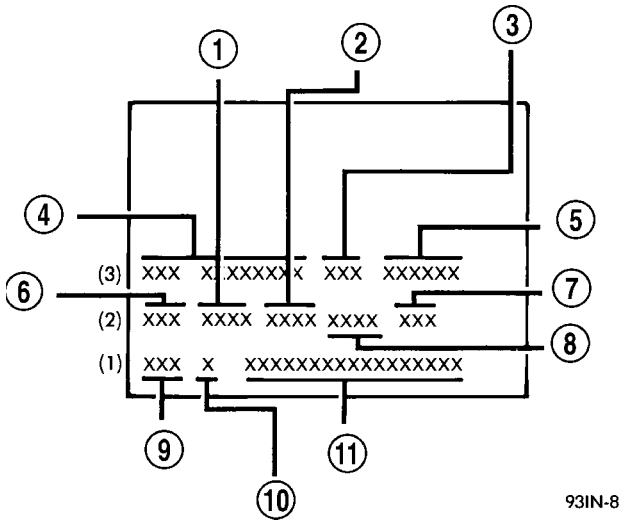

Fig. 1 BODY CODE PLATE

1 - PRIMARY PAINT
2 - SECONDARY PAINT
3 - VINYL ROOF
4 - VEHICLE ORDER NUMBER
5 - CAR LINE SHELL
6 - PAINT PROCEDURE
7 - ENGINE
8 - TRIM
9 - TRANSMISSION
10 - MARKET
11 - VIN

AWD

- C = Chrysler
- D = Dodge

BODY CODE PLATE (Continued)

DIGIT 21

Price Class
- H = Highline
- L = Lowline
- P = Premium
- S = Luxury
- X = Premium

DIGITS 22 AND 23

Body Type
- 52 = Short Wheel Base
- 53 = Long Wheel Base

BODY CODE PLATE LINE 2

DIGITS 1, 2 AND 3

Paint Procedure

DIGIT 4

Open Space

DIGITS 5 THROUGH 7

Primary Paint (Refer to 23 - BODY/PAINT - SPECIFICATIONS).

DIGIT 8 AND 9

Open Space

DIGITS 10 THROUGH 12

Secondary Paint

DIGIT 13 AND 14

Open Space

DIGITS 15 THROUGH 18

Interior Trim Code

DIGIT 19

Open Space

DIGITS 20, 21, AND 22

Engine Code
- EDZ = 2.4L 4 cyl. 16-Valve DOHC Gasoline (MPI)
- EGA = 3.3L 6 cyl. Gasoline (SMPI)
- EGH = 3.8L 6 cyl. Gasoline (SMPI)
- EGM = 3.3L 6 cyl. Ethanol Flexible Fuel
- ENJ = 2.5L 4 cyl. 16-Valve Turbo Diesel

DIGIT 23

Open Space

BODY CODE PLATE LINE 1

DIGITS 1, 2, AND 3

Transaxle Codes
- DGC = 31TH 3-Speed Automatic Transaxle
- DGL = 41AE/TE 4-Speed Electronic Automatic
- DDR = T850 5-Speed Manual Transaxle

DIGIT 4

Open Space

DIGIT 5

Market Code
- C = Canada
- B = International
- M = Mexico
- U = United States

DIGIT 6

Open Space

DIGITS 7 THROUGH 23

Vehicle Identification Number
- Refer to Vehicle Identification Number (VIN) paragraph for proper breakdown of VIN code.

IF TWO BODY CODE PLATES ARE REQUIRED

The last code shown on either plate will be followed by END. When two plates are required, the last code space on the first plate will indicate (CTD)

When a second plate is required, the first four spaces of each line will not be used due to overlap of the plates.

FASTENER IDENTIFICATION

DESCRIPTION

The SAE bolt strength grades range from grade 2 to grade 8. The higher the grade number, the greater the bolt strength. Identification is determined by the line marks on the top of each bolt head. The actual bolt strength grade corresponds to the number of line marks plus 2. The most commonly used metric bolt strength classes are 9.8 and 10.9. The metric strength class identification number is imprinted on the head of the bolt. The higher the class number, the greater the bolt strength. Some metric nuts are imprinted with a single-digit strength class on the nut face. Refer to the Fastener Identification and Fastener Strength Charts.

FASTENER IDENTIFICATION (Continued)

Bolt Markings and Torque - Metric

Commercial Steel Class

Bolt Head Markings

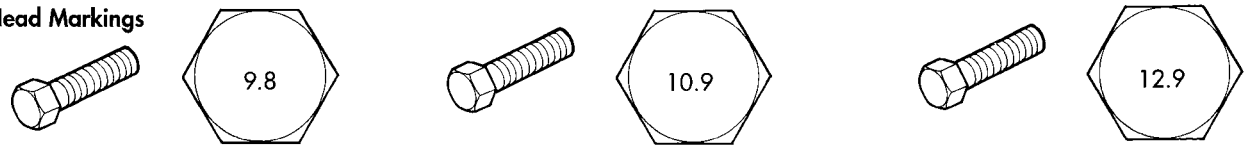

Body Size	9.8 Torque				10.9 Torque				12.9 Torque			
Diam.	Cast Iron		Aluminum		Cast Iron		Aluminum		Cast Iron		Aluminum	
mm	N•m	ft-lb	N•m	ft-lb	N•m	ft-lb	N•m	ft-lb	N•m	ft-lb	N•m	ft-lb
6	9	5	7	4	14	9	11	7	14	9	11	7
7	14	9	11	7	18	14	14	11	23	18	18	14
8	25	18	18	14	32	23	25	18	36	27	28	21
10	40	30	30	25	60	45	45	35	70	50	55	40
12	70	55	55	40	105	75	80	60	125	95	100	75
14	115	85	90	65	160	120	125	95	195	145	150	110
16	180	130	140	100	240	175	190	135	290	210	220	165
18	230	170	180	135	320	240	250	185	400	290	310	230

Bolt Markings and Torque Values - U.S. Customary

SAE Grade Number 5 8

Bolt Head Markings
These are all SAE Grade 5 (3) line

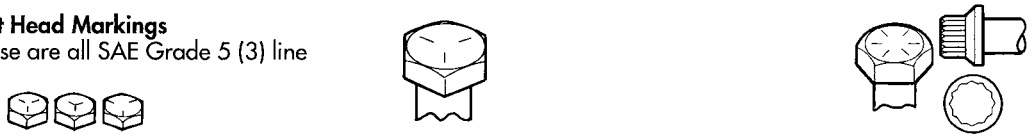

Body Size	Bolt Torque - Grade 5 Bolt: Cast Iron		Aluminum		Bolt Torque - Grade 8 Bolt: Cast Iron		Aluminum	
	N•m	ft-lb	N•m	ft-lb	N•m	ft-lb	N•m	ft-lb
1/4 - 20	9	7	8	6	15	11	12	9
- 28	12	9	9	7	18	13	14	10
5/16 - 18	20	15	16	12	30	22	24	18
- 24	23	17	19	14	33	24	25	19
3/8 - 16	40	30	25	20	55	40	40	30
- 24	40	30	35	25	60	45	45	35
7/16 - 14	60	45	45	35	90	65	65	50
- 20	65	50	55	40	95	70	75	55
1/2 - 13	95	70	75	55	130	95	100	75
- 20	100	75	80	60	150	110	120	90
9/16 - 12	135	100	110	80	190	140	150	110
- 18	150	110	115	85	210	155	170	125
5/8 - 11	180	135	150	110	255	190	205	150
- 18	210	155	160	120	290	215	230	170
3/4 - 10	325	240	255	190	460	340	365	270
- 16	365	270	285	210	515	380	410	300
7/8 - 9	490	360	380	280	745	550	600	440
- 14	530	390	420	310	825	610	660	490
1 - 8	720	530	570	420	1100	820	890	660
- 14	800	590	650	480	1200	890	960	710

80bdbd8c

FASTENER IDENTIFICATION (Continued)

HOW TO DETERMINE BOLT STRENGTH

	Mark	Class
Hexagon head bolt	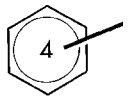 Bolt head No. 4 — 4T; 5 — 5T; 6 — 6T; 7 — 7T; 8 — 8T; 9 — 9T; 10 — 10T; 11 — 11T	
	 No mark	4T
Hexagon flange bolt w/washer hexagon bolt	 No mark	4T
Hexagon head bolt	 Two protruding lines	5T
Hexagon flange bolt w/washer hexagon bolt	 Two protruding lines	6T
Hexagon head bolt	 Three protruding lines	7T
Hexagon head bolt	 Four protruding lines	8T

	Mark	Class
Stud bolt	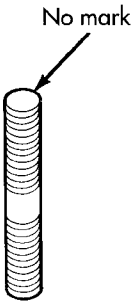 No mark	4T
	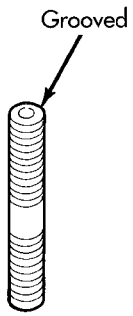 Grooved	6T
Welded bolt	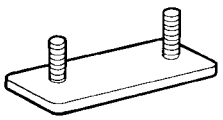	4T

95IN-4

FASTENER USAGE

DESCRIPTION

FASTENER USAGE

WARNING: USE OF AN INCORRECT FASTENER MAY RESULT IN COMPONENT DAMAGE OR PERSONAL INJURY.

Fasteners and torque specifications references in this Service Manual are identified in metric and SAE format.

During any maintenance or repair procedures, it is important to salvage all fasteners (nuts, bolts, etc.) for reassembly. If the fastener is not salvageable, a fastener of equivalent specification must be used.

THREADED HOLE REPAIR

Most stripped threaded holes can be repaired using a Helicoil®. Follow the vehicle or Helicoil® recommendations for application and repair procedures.

INTERNATIONAL SYMBOLS

DESCRIPTION

The graphic symbols illustrated in the following International Control and Display Symbols Chart are used to identify various instrument controls. The symbols correspond to the controls and displays that are located on the instrument panel.

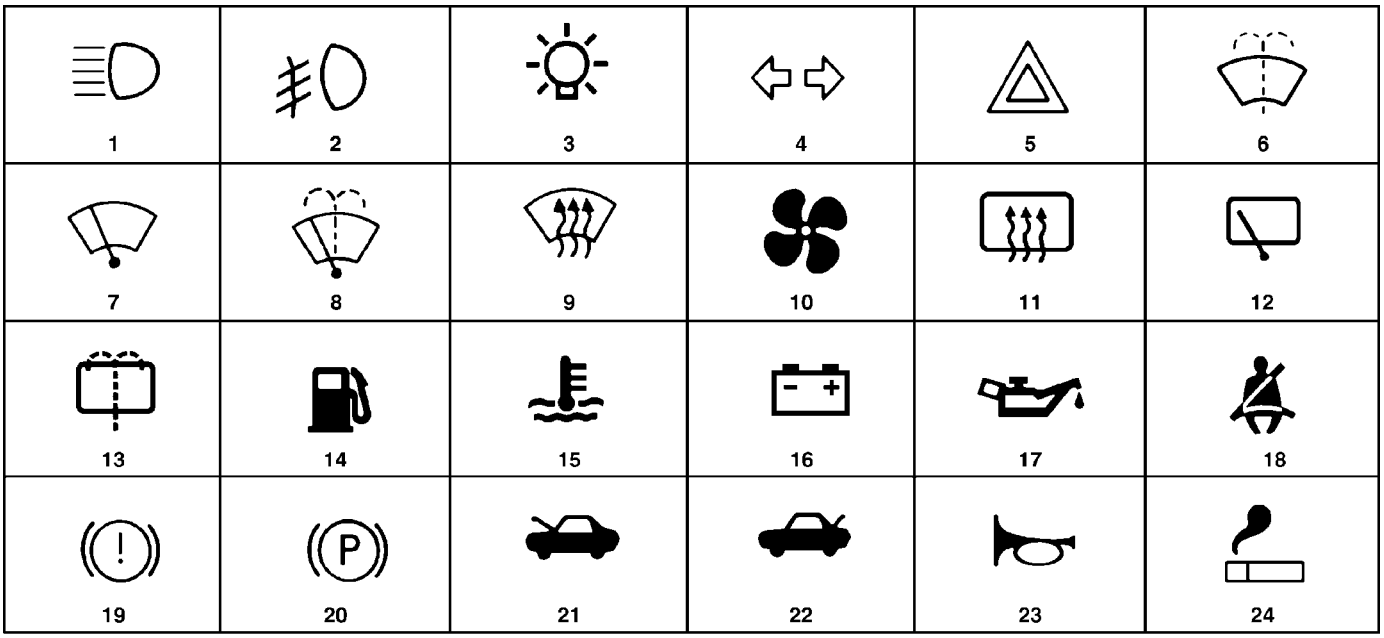

80be4788

INTERNATIONAL CONTROL AND DISPLAY SYMBOLS

1	High Beam	13	Rear Window Washer
2	Fog Lamps	14	Fuel
3	Headlamp, Parking Lamps, Panel Lamps	15	Engine Coolant Temperature
4	Turn Warning	16	Battery Charging Condition
5	Hazard Warning	17	Engine Oil
6	Windshield Washer	18	Seat Belt
7	Windshield Wiper	19	Brake Failure
8	Windshield Wiper and Washer	20	Parking Brake
9	Wind screen Demisting and Defrosting	21	Front Hood
10	Ventilating Fan	22	Rear hood (Decklid)
11	Rear Window Defogger	23	Horn
12	Rear Window Wiper	24	Lighter

METRIC SYSTEM

DESCRIPTION

The metric system is based on quantities of one, ten, one hundred, one thousand and one million.

The following chart will assist in converting metric units to equivalent English and SAE units, or vise versa.

CONVERSION FORMULAS AND EQUIVALENT VALUES

MULTIPLY	BY	TO GET	MULTIPLY	BY	TO GET
in-lbs	x 0.11298	= Newton Meters (N·m)	N·m	x 8.851	= in-lbs
ft-lbs	x 1.3558	= Newton Meters (N·m)	N·m	x 0.7376	= ft-lbs
Inches Hg (60° F)	x 3.377	= Kilopascals (kPa)	kPa	x 0.2961	= Inches Hg
psi	x 6.895	= Kilopascals (kPa)	kPa	x 0.145	= psi
Inches	x 25.4	= Millimeters (mm)	mm	x 0.03937	= Inches
Feet	x 0.3048	= Meters (M)	M	x 3.281	= Feet
Yards	x 0.9144	= Meters	M	x 1.0936	= Yards
mph	x 1.6093	= Kilometers/Hr. (Km/h)	Km/h	x 0.6214	= mph
Feet/Sec	x 0.3048	= Meters/Sec (M/S)	M/S	x 3.281	= Feet/Sec
mph	x 0.4470	= Meters/Sec (M/S)	M/S	x 2.237	= mph
Kilometers/Hr. (Km/h)	x 0.27778	= Meters/Sec (M/S)	M/S	x 3.600	Kilometers/Hr. (Km/h)

COMMON METRIC EQUIVALENTS

1 inch = 25 Millimeters	1 Cubic Inch = 16 Cubic Centimeters
1 Foot = 0.3 Meter	1 Cubic Foot = 0.03 Cubic Meter
1 Yard = 0.9 Meter	1 Cubic Yard = 0.8 Cubic Meter
1 Mile = 1.6 Kilometers	

Refer to the Metric Conversion Chart to convert torque values listed in metric Newton- meters (N·m). Also, use the chart to convert between millimeters (mm) and inches (in.).

METRIC SYSTEM (Continued)

in-lbs to N•m

in- lb	N•m	in-lb	N•m	in-lb	N•m	in-lb	N•m	in-lb	N•m
2	.2260	42	4.7453	82	9.2646	122	13.7839	162	18.3032
4	.4519	44	4.9713	84	9.4906	124	14.0099	164	18.5292
6	.6779	46	5.1972	86	9.7165	126	14.2359	166	18.7552
8	.9039	48	5.4232	88	9.9425	128	14.4618	168	18.9811
10	1.1298	50	5.6492	90	10.1685	130	14.6878	170	19.2071
12	1.3558	52	5.8751	92	10.3944	132	14.9138	172	19.4331
14	1.5818	54	6.1011	94	10.6204	134	15.1397	174	19.6590
16	1.8077	56	6.3270	96	10.8464	136	15.3657	176	19.8850
18	2.0337	58	6.5530	98	11.0723	138	15.5917	178	20.1110
20	2.2597	60	6.7790	100	11.2983	140	15.8176	180	20.3369
22	2.4856	62	7.0049	102	11.5243	142	16.0436	182	20.5629
24	2.7116	64	7.2309	104	11.7502	144	16.2696	184	20.7889
26	2.9376	66	7.4569	106	11.9762	146	16.4955	186	21.0148
28	3.1635	68	7.6828	108	12.2022	148	16.7215	188	21.2408
30	3.3895	70	7.9088	110	12.4281	150	16.9475	190	21.4668
32	3.6155	72	8.1348	112	12.6541	152	17.1734	192	21.6927
34	3.8414	74	8.3607	114	12.8801	154	17.3994	194	21.9187
36	4.0674	76	8.5867	116	13.1060	156	17.6253	196	22.1447
38	4.2934	78	8.8127	118	13.3320	158	17.8513	198	22.3706
40	4.5193	80	9.0386	120	13.5580	160	18.0773	200	22.5966

N•m to in-lbs

N•m	in-lb	N•m	in-lb	N•m	in-lb	N•m	in-lb	N•m	in-lb
.2	1.7702	4.2	37.1747	8.2	72.5792	12.2	107.9837	16.2	143.3882
.4	3.5404	4.4	38.9449	8.4	74.3494	12.4	109.7539	16.4	145.1584
.6	5.3107	4.6	40.7152	8.6	76.1197	12.6	111.5242	16.6	146.9287
.8	7.0809	4.8	42.4854	8.8	77.8899	12.8	113.2944	16.8	148.6989
1	8.8511	5	44.2556	9	79.6601	13	115.0646	17	150.4691
1.2	10.6213	5.2	46.0258	9.2	81.4303	13.2	116.8348	17.2	152.2393
1.4	12.3916	5.4	47.7961	9.4	83.2006	13.4	118.6051	17.4	154.0096
1.6	14.1618	5.6	49.5663	9.6	84.9708	13.6	120.3753	17.6	155.7798
1.8	15.9320	5.8	51.3365	9.8	86.7410	13.8	122.1455	17.8	157.5500
2	17.7022	6	53.1067	10	88.5112	14	123.9157	18	159.3202
2.2	19.4725	6.2	54.8770	10.2	90.2815	14.2	125.6860	18.5	163.7458
2.4	21.2427	6.4	56.6472	10.4	92.0517	14.4	127.4562	19	168.1714
2.6	23.0129	6.6	58.4174	10.6	93.8219	14.6	129.2264	19.5	172.5970
2.8	24.7831	6.8	60.1876	10.8	95.5921	14.8	130.9966	20	177.0225
3	26.5534	7	61.9579	11	97.3624	15	132.7669	20.5	181.4480
3.2	28.3236	7.2	63.7281	11.2	99.1326	15.2	134.5371	21	185.8736
3.4	30.0938	7.4	65.4983	11.4	100.9028	15.4	136.3073	22	194.7247
3.6	31.8640	7.6	67.2685	11.6	102.6730	15.6	138.0775	23	203.5759
3.8	33.6342	7.8	69.0388	11.8	104.4433	15.8	139.8478	24	212.4270
4	35.4045	8	70.8090	12	106.2135	16	141.6180	25	221.2781

ft-lbs to N•m

ft-lb	N•m	ft-lb	N•m	ft-lb	N•m	ft-lb	N•m	ft-lb	N•m
1	1.3558	21	28.4722	41	55.5885	61	82.7049	81	109.8212
2	2.7116	22	29.8280	42	56.9444	62	84.0607	82	111.1770
3	4.0675	23	31.1838	43	58.3002	63	85.4165	83	112.5328
4	5.4233	24	32.5396	44	59.6560	64	86.7723	84	113.8888
5	6.7791	25	33.8954	45	61.0118	65	88.1281	85	115.2446
6	8.1349	26	35.2513	46	62.3676	66	89.4840	86	116.6004
7	9.4907	27	36.6071	47	63.7234	67	90.8398	87	117.9562
8	10.8465	28	37.9629	48	65.0793	68	92.1956	88	119.3120
9	12.2024	29	39.3187	49	66.4351	69	93.5514	89	120.6678
10	13.5582	30	40.6745	50	67.7909	70	94.9073	90	122.0236
11	14.9140	31	42.0304	51	69.1467	71	96.2631	91	123.3794
12	16.2698	32	43.3862	52	70.5025	72	97.6189	92	124.7352
13	17.6256	33	44.7420	53	71.8583	73	98.9747	93	126.0910
14	18.9815	34	46.0978	54	73.2142	74	100.3316	94	127.4468
15	20.3373	35	47.4536	55	74.5700	75	101.6862	95	128.8026
16	21.6931	36	48.8094	56	75.9258	76	103.0422	96	130.1586
17	23.0489	37	50.1653	57	77.2816	77	104.3980	97	131.5144
18	24.4047	38	51.5211	58	78.6374	78	105.7538	98	132.8702
19	25.7605	39	52.8769	59	79.9933	79	107.1196	99	134.2260
20	27.1164	40	54.2327	60	81.3491	80	108.4654	100	135.5820

N•m to ft-lbs

N•m	ft-lb	N•m	ft-lb	N•m	ft-lb	N•m	ft-lb	N•m	ft-lb
1	.7376	21	15.9888	41	30.2400	61	44.9913	81	59.7425
2	1.4751	22	16.2264	42	30.9776	62	45.7289	82	60.4801
3	2.2127	23	16.9639	43	31.7152	63	46.4664	83	61.2177
4	2.9502	24	17.7015	44	32.4527	64	47.2040	84	61.9552
5	3.6878	25	18.4391	45	33.1903	65	47.9415	85	62.6928
6	4.4254	26	19.1766	46	33.9279	66	48.6791	86	63.4303
7	5.1629	27	19.9142	47	34.6654	67	49.4167	87	64.1679
8	5.9005	28	20.6517	48	35.4030	68	50.1542	88	64.9545
9	6.6381	29	21.3893	49	36.1405	69	50.8918	89	65.6430
10	7.3756	30	22.1269	50	36.8781	70	51.6293	90	66.3806
11	8.1132	31	22.8644	51	37.6157	71	52.3669	91	67.1181
12	8.8507	32	23.6020	52	38.3532	72	53.1045	92	67.8557
13	9.5883	33	24.3395	53	39.0908	73	53.8420	93	68.5933
14	10.3259	34	25.0771	54	39.8284	74	54.5720	94	69.3308
15	11.0634	35	25.8147	55	40.5659	75	55.3172	95	70.0684
16	11.8010	36	26.5522	56	41.3035	76	56.0547	96	70.8060
17	12.5386	37	27.2898	57	42.0410	77	56.7923	97	71.5435
18	13.2761	38	28.0274	58	42.7786	78	57.5298	98	72.2811
19	14.0137	39	28.7649	59	43.5162	79	58.2674	99	73.0187
20	14.7512	40	29.5025	60	44.2537	80	59.0050	100	73.7562

in. to mm

in.	mm	in.	mm	in.	mm	in.	mm	in.	mm
.01	.254	.21	5.334	.41	10.414	.61	15.494	.81	20.574
.02	.508	.22	5.588	.42	10.668	.62	15.748	.82	20.828
.03	.762	.23	5.842	.43	10.922	.63	16.002	.83	21.082
.04	1.016	.24	6.096	.44	11.176	.64	16.256	.84	21.336
.05	1.270	.25	6.350	.45	11.430	.65	16.510	.85	21.590
.06	1.524	.26	6.604	.46	11.684	.66	16.764	.86	21.844
.07	1.778	.27	6.858	.47	11.938	.67	17.018	.87	22.098
.08	2.032	.28	7.112	.48	12.192	.68	17.272	.88	22.352
.09	2.286	.29	7.366	.49	12.446	.69	17.526	.89	22.606
.10	2.540	.30	7.620	.50	12.700	.70	17.780	.90	22.860
.11	2.794	.31	7.874	.51	12.954	.71	18.034	.91	23.114
.12	3.048	.32	8.128	.52	13.208	.72	18.288	.92	23.368
.13	3.302	.33	8.382	.53	13.462	.73	18.542	.93	23.622
.14	3.556	.34	8.636	.54	13.716	.74	18.796	.94	23.876
.15	3.810	.35	8.890	.55	13.970	.75	19.050	.95	24.130
.16	4.064	.36	9.144	.56	14.224	.76	19.304	.96	24.384
.17	3.318	.37	9.398	.57	14.478	.77	19.558	.97	24.638
.18	4.572	.38	9.652	.58	14.732	.78	19.812	.98	24.892
.19	4.826	.39	9.906	.59	14.986	.79	20.066	.99	25.146
.20	5.080	.40	10.160	.60	15.240	.80	20.320	1.00	25.400

mm to in.

mm	in.	mm	in.	mm	in.	mm	in.	mm	in.
.01	.00039	.21	.00827	.41	.01614	.61	.02402	.81	.03189
.02	.00079	.22	.00866	.42	.01654	.62	.02441	.82	.03228
.03	.00118	.23	.00906	.43	.01693	.63	.02480	.83	.03268
.04	.00157	.24	.00945	.44	.01732	.64	.02520	.84	.03307
.05	.00197	.25	.00984	.45	.01772	.65	.02559	.85	.03346
.06	.00236	.26	.01024	.46	.01811	.66	.02598	.86	.03386
.07	.00276	.27	.01063	.47	.01850	.67	.02638	.87	.03425
.08	.00315	.28	.01102	.48	.01890	.68	.02677	.88	.03465
.09	.00354	.29	.01142	.49	.01929	.69	.02717	.89	.03504
.10	.00394	.30	.01181	.50	.01969	.70	.02756	.90	.03543
.11	.00433	.31	.01220	.51	.02008	.71	.02795	.91	.03583
.12	.00472	.32	.01260	.52	.02047	.72	.02835	.92	.03622
.13	.00512	.33	.01299	.53	.02087	.73	.02874	.93	.03661
.14	.00551	.34	.01339	.54	.02126	.74	.02913	.94	.03701
.15	.00591	.35	.01378	.55	.02165	.75	.02953	.95	.03740
.16	.00630	.36	.01417	.56	.02205	.76	.02992	.96	.03780
.17	.00669	.37	.01457	.57	.02244	.77	.03032	.97	.03819
.18	.00709	.38	.01496	.58	.02283	.78	.03071	.98	.03858
.19	.00748	.39	.01535	.59	.02323	.79	.03110	.99	.03898
.20	.00787	.40	.01575	.60	.02362	.80	.03150	1.00	.03937

J901N-10

TORQUE REFERENCES

DESCRIPTION

SPECIFIED TORQUE FOR STANDARD BOLTS

Class	Diameter mm	Pitch mm	Specified torque					
			Hexagon head bolt			Hexagon flange bolt		
			N•m	kgf-cm	ft-lbf	N•m	kgf-cm	ft-lbf
4T	6	1	5	55	48 in.-lbf	6	60	52 in.-lbf
	8	1.25	12.5	130	9	14	145	10
	10	1.25	26	260	19	29	290	21
	12	1.25	47	480	35	53	540	39
	14	1.5	74	760	55	84	850	61
	16	1.5	115	1,150	83	—	—	—
5T	6	1	6.5	65	56 in.-lbf	7.5	75	65 in.-lbf
	8	1.25	15.5	160	12	17.5	175	13
	10	1.25	32	330	24	36	360	26
	12	1.25	59	600	43	65	670	48
	14	1.5	91	930	67	100	1,050	76
	16	1.5	140	1,400	101	—	—	—
6T	6	1	8	80	69 in.-lbf	9	90	78 in.-lbf
	8	1.25	19	195	14	21	210	15
	10	1.25	39	400	29	44	440	32
	12	1.25	71	730	53	80	810	59
	14	1.5	110	1,100	80	125	1,250	90
	16	1.5	170	1,750	127	—	—	—
7T	6	1	10.5	110	8	12	120	9
	8	1.25	25	260	19	28	290	21
	10	1.25	52	530	38	58	590	43
	12	1.25	95	970	70	105	1,050	76
	14	1.5	145	1,500	108	165	1,700	123
	16	1.5	230	2,300	166	—	—	—
8T	8	1.25	29	300	22	33	330	24
	10	1.25	61	620	45	68	690	50
	12	1.25	110	1,100	80	120	1,250	90
9T	8	1.25	34	340	25	37	380	27
	10	1.25	70	710	51	78	790	57
	12	1.25	125	1,300	94	140	1,450	105
10T	8	1.25	38	390	28	42	430	31
	10	1.25	78	800	58	88	890	64
	12	1.25	140	1,450	105	155	1,600	116
11T	8	1.25	42	430	31	47	480	35
	10	1.25	87	890	64	97	990	72
	12	1.25	155	1,600	116	175	1,800	130

TORQUE REFERENCES (Continued)

Individual Torque Charts appear within many or the Groups. Refer to the Standard Torque Specifications Chart for torque references not listed in the individual torque charts.

VEHICLE IDENTIFICATION NUMBER

DESCRIPTION

The Vehicle Identification Number (VIN) can be viewed through the windshield at the upper left corner of the instrument panel, near the left windshield pillar (Fig. 2). The VIN consists of 17 characters in a combination of letters and numbers that provide specific information about the vehicle. Refer to VIN Code Breakdown Chart for decoding information.

To protect the consumer from theft and possible fraud the manufacturer is required to include a Check Digit at the ninth position of the vehicle identification number. The check digit is used by the manufacturer and government agencies to verify the authenticity of the vehicle and official documentation. The formula to use the check digit is not released to the general public.

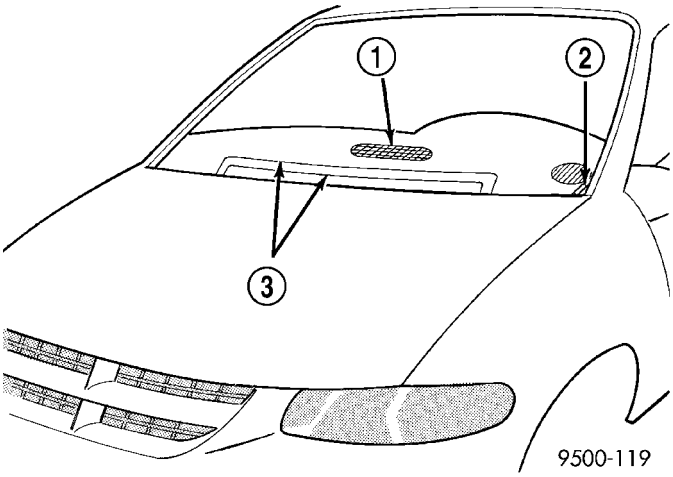

Fig. 2 VEHICLE IDENTIFICATION NUMBER (VIN)

1 - DEFROSTER OUTLET
2 - VEHICLE IDENTIFICATION NUMBER
3 - HEATED WINDSHIELD GRID

VIN CODE BREAKDOWN CHART

POSITION	INTERPRETATION	CODE = DESCRIPTION
1	Country of Origin	1 = Manufactured By DaimlerChrysler Corporation 2 = Manufactured By DaimlerChrysler Canada Inc.
2	Make	D = Dodge C = Chrysler
3	Vehicle Type	4 = Multipurpose Pass. Vehicle Less Side Air Bags 8 = Multipurpose Pass. Vehicle With Side Air Bags
4	Gross Vehicle Weight Rating	G = 2268 - 2721 kg. (5001 - 6000 lbs.)
5	Car Line	1 = Chrysler Caravan - FWD P = Chrysler, Town & Country - FWD P = Dodge, Caravan/Grand Caravan - FWD P = Dodge, Caravan C/V, Grand Caravan C/V - FWD T = Chrysler, Town & Country - AWD T = Dodge, Grand Caravan - AWD J = Chrysler, Voyager/Grand Voyager - FWD Y = Voyager/Grand Voyager - FWD Left Hand Drive C = Voyager/Grand Voyager - AWD Left Hand Drive H = Voyager/Grand Voyager - FWD Right Hand Drive K = Voyager/Grand Voyager - AWD Left Hand Drive

VEHICLE CERTIFICATION LABEL

DESCRIPTION

A vehicle certification label is attached to the rear shutface of the driver's door (Fig. 3). This label indicates date of manufacture (month and year), Gross Vehicle Weight Rating (GVWR), Gross Axle Weight Rating (GAWR) front, Gross Axle Weight Rating (GAWR) rear and the Vehicle Identification Number (VIN). The Month, Day and Hour of manufacture is also included.

All communications or inquiries regarding the vehicle should include the Month-Day-Hour and Vehicle Identification Number.

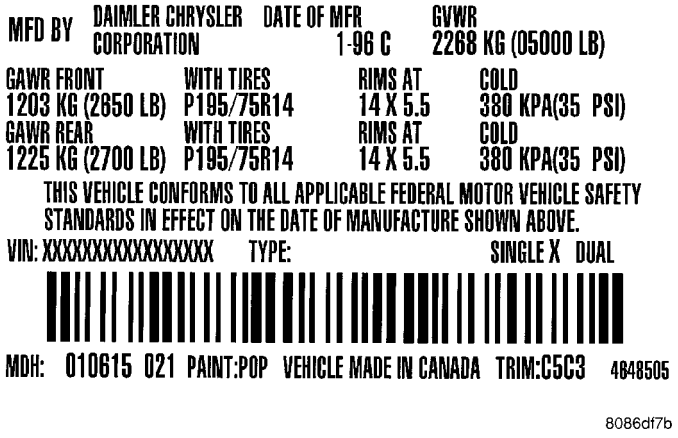

Fig. 3 VEHICLE CERTIFICATION LABEL - TYPICAL

E-MARK LABEL

DESCRIPTION

An E-mark Label (Fig. 4) is located on the rear shut face of the driver's door. The label contains the following information:

- Date of Manufacture
- Month-Day-Hour (MDH)
- Vehicle Identification Number (VIN)
- Country Codes
- Regulation Number
- Regulation Amendment Number
- Approval Number

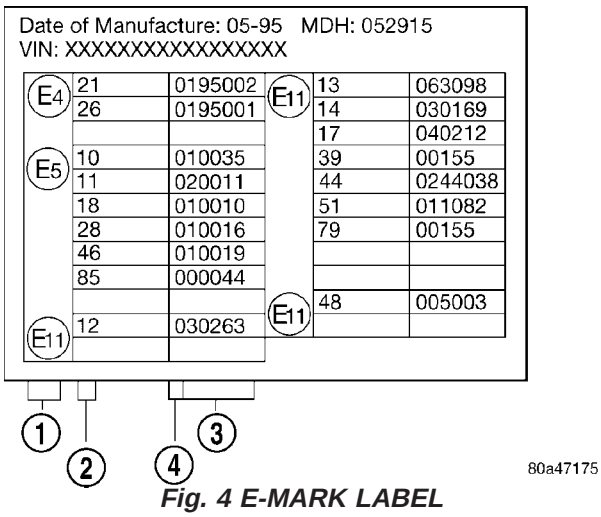

Fig. 4 E-MARK LABEL

1 - COUNTRY CODE
2 - REGULATION NUMBER
3 - APPROVAL NUMBER
4 - AMENDMENT NUMBER

VECI LABEL

DESCRIPTION

All models have a Vehicle Emission Control Information (VECI) Label. Chrysler permanently attaches the label in the engine compartment. It cannot be removed without defacing information and destroying the label.

The label contains the vehicle's emission specifications and vacuum hose routings. All hoses must be connected and routed according to the label.

MANUFACTURER PLATE

DESCRIPTION

The Manufacturer Plate (Fig. 5) is located in the engine compartment on the passenger side rear corner of the hood. The plate contains five lines of information:

1. Vehicle Identification Number (VIN)
2. Gross Vehicle Mass (GVM)
3. Gross Train Mass (GTM)
4. Gross Front Axle Rating (GFAR)
5. Gross Rear Axle Rating (GRAR)

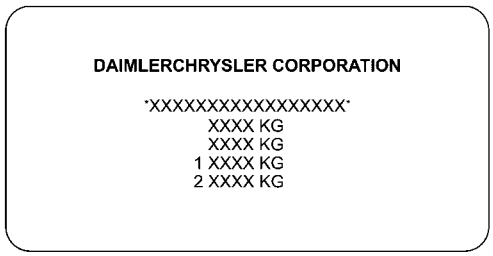

Fig. 5 MANUFACTURER PLATE

LUBRICATION & MAINTENANCE

TABLE OF CONTENTS

page

INTERNATIONAL SYMBOLS
DESCRIPTION 1
FLUID TYPES
DESCRIPTION
DESCRIPTION - ENGINE OIL AND LUBRICANTS 1
DESCRIPTION - ENGINE COOLANT 3
DESCRIPTION - FLEXIBLE FUEL ENGINE OIL 3
DESCRIPTION - AUTOMATIC/MANUAL TRANSAXLE FLUID 4
DESCRIPTION - FUEL REQUIREMENTS 4
DESCRIPTION - FUEL REQUIREMENTS - DIESEL ENGINE 6
DESCRIPTION - ENGINE OIL - DIESEL ENGINES 6
DESCRIPTION - AWD REAR DRIVELINE MODULE FLUIDS 6
DESCRIPTION - AWD POWER TRANSFER UNIT FLUID 6

page

FLUID CAPACITIES
SPECIFICATIONS - FLUID CAPACITIES 6
FLUID FILL/CHECK LOCATIONS
DESCRIPTION 7
LUBRICATION POINTS
DESCRIPTION 7
MAINTENANCE SCHEDULES
DESCRIPTION
DESCRIPTION 7
DESCRIPTION - EXPORT 13
DESCRIPTION - DIESEL ENGINES - EXPORT 21
HOISTING
STANDARD PROCEDURE - HOISTING 24
JUMP STARTING
STANDARD PROCEDURE - JUMP STARTING . 25
TOWING
STANDARD PROCEDURE - TOWING 26

INTERNATIONAL SYMBOLS

DESCRIPTION

DaimlerChrysler Corporation uses international symbols to identify engine compartment lubricant and fluid inspection and fill locations (Fig. 1).

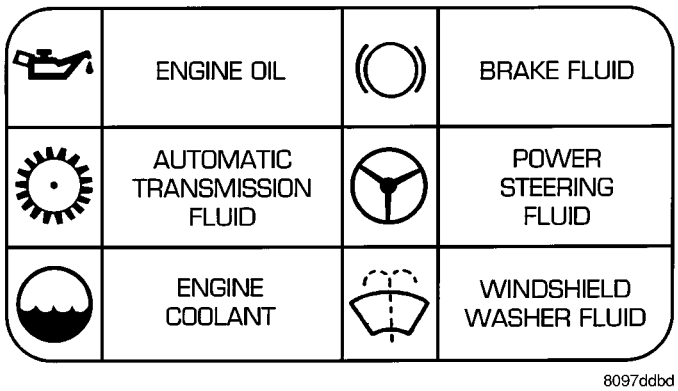

Fig. 1 INTERNATIONAL SYMBOLS

FLUID TYPES

DESCRIPTION

DESCRIPTION - ENGINE OIL AND LUBRICANTS

WARNING: NEW OR USED ENGINE OIL CAN BE IRRITATING TO THE SKIN. AVOID PROLONGED OR REPEATED SKIN CONTACT WITH ENGINE OIL. CONTAMINANTS IN USED ENGINE OIL, CAUSED BY INTERNAL COMBUSTION, CAN BE HAZARDOUS TO YOUR HEALTH. THOROUGHLY WASH EXPOSED SKIN WITH SOAP AND WATER. DO NOT WASH SKIN WITH GASOLINE, DIESEL FUEL, THINNER, OR SOLVENTS, HEALTH PROBLEMS CAN RESULT. DO NOT POLLUTE, DISPOSE OF USED ENGINE OIL PROPERLY. CONTACT YOUR DEALER OR GOVERNMENT AGENCY FOR LOCATION OF COLLECTION CENTER IN YOUR AREA.

When service is required, DaimlerChrysler Corporation recommends that only Mopar® brand parts, lubricants and chemicals be used. Mopar® provides the best engineered products for servicing DaimlerChrysler Corporation vehicles.

Only lubricants bearing designations defined by the following organization should be used.

FLUID TYPES (Continued)

- Society of Automotive Engineers (SAE)
- American Petroleum Institute (API)
- National Lubricating Grease Institute (NLGI)

API CERTIFICATION AND LICENSE SYMBOL

Use an engine oil that is API Certified (GF-3) and Licensed to display the certification mark (Fig. 2). MOPAR® provides engine oils that meet or exceed, Material Standard MS-6395 requirement.



9400-9

Fig. 2 API Certification Mark

SAE VISCOSITY

SAE 5W-20 and SAE 5W-30 engine oils are recommended for all operating temperatures. These engine oils are designed to improve low temperature starting and vehicle fuel economy. Refer to the engine oil filler cap for the preferred engine oil viscosity grade for each vehicle (Fig. 3). SAE viscosity grades are used to specify the correct viscosity oil for an engine. Use only Multi-Viscosity oils such as SAE 5W-20 or 5W-30. These are specified with a dual SAE viscosity grade which indicates the cold (5W) to hot (20, 30) temperature performance range of the oil.

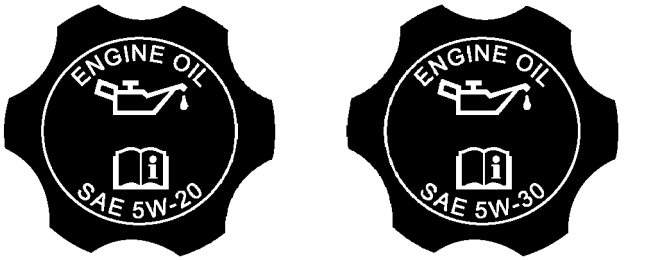

81364ec7

Fig. 3 5W-30 Oil Filler Cap

CONTAINER IDENTIFICATION

The Engine Oil Certificarion Mark was developed and trademarked by the API to refer customers to those engine oils preferred by the automobile manufacturers. This symbol means that the oil has been certified and licensed by the American Petroleum Institute (API). This certification mark will only be found on the front of the oil containers. Those oils that do not display the "Mark" on the front of the container should not be used (Fig. 2).

DiamlerChrysler only recommends API Certified engine oils that meet the requirements of Material Standard MS-6395. Use Mopar or an equivalent oil meeting the specification MS-6395.

SYNTHETIC ENGINE OILS

There are a number of engine oils being promoted as either synthetic or semi-synthetic. If you chose to use such a product, use **only** those oils that are certified by the American Petroleum Institute (API) to display the "Certification Mark" and show SAE viscosity grade recommended for each vehicle. Follow the service schedule that describes your driving type.

ENGINE OIL ADDITIVES/SUPPLEMENTS

The manufacturer **does not recommend** the addition of any engine oil additives/supplements to the specified engine oil. Engine oil additives/supplements should not be used to enhance engine oil performance. Engine oil additives/supplements should not be used to extend engine oil change intervals. No additive is known to be safe for engine durability and can degrade emission components. Additives can contain undesirable materials that harm the long term durability of engines by:

- Increasing the level of Phosphorus and Sulfur in the engine oil. The API Certified Engine Oils control the Phosphorus and Sulfur contents of the oil to levels that reduce the contamination effect on the vehicles emission control system.
- Altering the viscosity characteristics of the engine oil so that it no longer meets the requirements of the specified viscosity grade.
- Creating potential for an undesirable additive compatibility interaction in the engine crankcase. The engine oils contain a performance additive system carefully developed to optimize the oils performance in the engine. The addition of supplements may cause the oil to thicken prematurely, cause excessive deposit build up and potentially shorten engine life.

AXLE LUBRICANTS

SAE ratings also apply to multigrade gear lubricants. In addition, API classification defines the lubricants usage. Such as API GL-5 and SAE 75W-90.

LUBRICANTS AND GREASES

Lubricating grease is rated for quality and usage by the NLGI. All approved products have the NLGI symbol (Fig. 4) on the label. At the bottom of the NLGI symbol is the usage and quality identification letters. Wheel bearing lubricant is identified by the

FLUID TYPES (Continued)

letter “G”. Chassis lubricant is identified by the letter “L”. The letter following the usage letter indicates the quality of the lubricant. The following symbols indicate the highest quality.

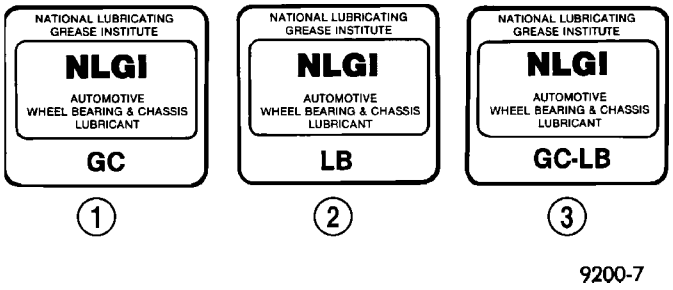

Fig. 4 NLGI SYMBOL

1 - WHEEL BEARINGS
2 - CHASSIS LUBRICATION
3 - CHASSIS AND WHEEL BEARINGS

SPECIALIZED LUBRICANTS AND OILS

Some maintenance or repair procedures may require the use of specialized lubricants or oils. Consult the appropriate sections in this manual for the correct application of these lubricants.

DESCRIPTION - ENGINE COOLANT

WARNING: ANTIFREEZE IS AN ETHYLENE GLYCOL BASE COOLANT AND IS HARMFUL IF SWALLOWED OR INHALED. IF SWALLOWED, DRINK TWO GLASSES OF WATER AND INDUCE VOMITING. IF INHALED, MOVE TO FRESH AIR AREA. SEEK MEDICAL ATTENTION IMMEDIATELY. DO NOT STORE IN OPEN OR UNMARKED CONTAINERS. WASH SKIN AND CLOTHING THOROUGHLY AFTER COMING IN CONTACT WITH ETHYLENE GLYCOL. KEEP OUT OF REACH OF CHILDREN. DISPOSE OF GLYCOL BASE COOLANT PROPERLY, CONTACT YOUR DEALER OR GOVERNMENT AGENCY FOR LOCATION OF COLLECTION CENTER IN YOUR AREA. DO NOT OPEN A COOLING SYSTEM WHEN THE ENGINE IS AT OPERATING TEMPERATURE OR HOT UNDER PRESSURE, PERSONAL INJURY CAN RESULT. AVOID RADIATOR COOLING FAN WHEN ENGINE COMPARTMENT RELATED SERVICE IS PERFORMED, PERSONAL INJURY CAN RESULT.

CAUTION: Use of Propylene Glycol based coolants is not recommended, as they provide less freeze protection and less boiling protection.

The cooling system is designed around the coolant. The coolant must accept heat from engine metal, in the cylinder head area near the exhaust valves and engine block. Then coolant carries the heat to the radiator where the tube/fin radiator can transfer the heat to the air.

The use of aluminum cylinder blocks, cylinder heads, and water pumps requires special corrosion protection. Mopar® Antifreeze/Coolant, 5 Year/100,000 Mile Formula (MS-9769), or the equivalent ethylene glycol base coolant with hybrid organic corrosion inhibitors (called HOAT, for Hybrid Organic Additive Technology) is recommended. This coolant offers the best engine cooling without corrosion when mixed with 50% Ethylene Glycol and 50% distilled water to obtain a freeze point of -37°C (-35°F). If it loses color or becomes contaminated, drain, flush, and replace with fresh properly mixed coolant solution.

The green coolant **MUST NOT BE MIXED** with the orange or magenta coolants. When replacing coolant the complete system flush must be performed before using the replacement coolant.

CAUTION: Mopar® Antifreeze/Coolant, 5 Year/100,000 Mile Formula (MS-9769) may not be mixed with any other type of antifreeze. Doing so will reduce the corrosion protection and may result in premature water pump seal failure. If non-HOAT coolant is introduced into the cooling system in an emergency, it should be replaced with the specified coolant as soon as possible.

DESCRIPTION - FLEXIBLE FUEL ENGINE OIL

The information in this section is for Flexible Fuel Vehicles (FFV) only. These vehicles can be identified by the unique Fuel Filler Door Label that states Ethanol (E-85) or Unleaded Gasoline Only. This section only covers those subjects that are unique to these vehicles. Please refer to the other sections of this manual for information on features that are common between Flexible Fuel and gasoline only powered vehicles.

ETHANOL FUEL (E-85)

E-85 is a mixture of approximately 85% fuel ethanol and 15% unleaded gasoline.

WARNING: Ethanol vapors are extremely flammable and could cause serious personal injury. Never have any smoking materials lit in or near the vehicle when removing the fuel filler tube cap (gas cap) or filling the tank. Do not use E-85 as a cleaning agent and never use it near an open flame.

FUEL REQUIREMENTS

The vehicle will operate on both unleaded gasoline with an octane rating of 87, or E-85 fuel, or any mixture of these two.

FLUID TYPES (Continued)

For best results, a refueling pattern that alternates between E-85 and unleaded gasoline should be avoided. When you do switch fuels, it is recommended that

- you do not switch when the fuel gauge indicates less than 1/4 full
- you do not add less than 5 gallons when refueling
- you operate the vehicle immediately after refueling for a period of at least 5 minutes

Observing these precautions will avoid possible hard starting and/or significant deterioration in driveability during warm up.

FFV STARTING

The characteristics of E-85 fuel make it unsuitable for use when ambient temperatures fall below 0°F. In the range of 0°F to 32°F, you may experience an increase in the time it takes for your engine to start, and a deterioration in driveability (sags and/or hesitations) until the engine is fully warmed up.

Engine Operating on E-85 Fuel

If vehicle operates on E-85 fuel either full or part-time, use only Mopar® Flexible Fuel 5W-30 engine oil or an equivalent that meets DaimlerChrysler Standard MS-9214. Equivalent commercial Flexible Fuel engine oils may be labeled as Multi-Fuel, Variable Fuel, Flexible Fuel, etc. These engine oils may be satisfactory if they meet the DaimlerChrysler Standard.

SAE 5W-30 engine oil is preferred for use in Flexible Fuel engines.

CAUTION: If Flexible Fuel engine oil is not used when using E-85 fuel, engine wear or damage may result.

CRUISING RANGE

Because E-85 fuel contains less energy per gallon than gasoline, you will experience an increase in fuel consumption. You can expect your MPG and your driving range to decrease by about 30% compared to gasoline operation.

DESCRIPTION - AUTOMATIC/MANUAL TRANSAXLE FLUID

NOTE: Refer to the maintenance schedules for the recommended maintenance (fluid/filter change) intervals for these transaxles.

NOTE: All transaxles have a common transmission and differential sump. Filling the transaxle accommodates the differential as well.

TRANSMISSION FLUID

Mopar® ATF+4 (Automatic Transmission Fluid) is required in the 4XTE automatic and T850 manual transaxles. Substitute fluids can induce transmission problems and/or failure.

Mopar® ATF+4 (Automatic Transmission Fluid) when new is red in color. The ATF is dyed red so it can be identified from other fluids used in the vehicle such as engine oil or antifreeze. The red color is not permanent and is not an indicator of fluid condition. As the vehicle is driven, the ATF will begin to look darker in color and may eventually become brown. **This is normal.** ATF+4 also has a unique odor that may change with age. Consequently, **odor and color cannot be used to indicate the fluid condition or the need for a fluid change.**

FLUID ADDITIVES

DaimlerChrysler strongly recommends against the addition of any fluids to the transmission, other than those automatic transmission fluids listed above. Exceptions to this policy are the use of special dyes to aid in detecting fluid leaks.

Various “special” additives and supplements exist that claim to improve shift feel and/or quality. These additives and others also claim to improve converter clutch operation and inhibit overheating, oxidation, varnish, and sludge. These claims have not been supported to the satisfaction of DaimlerChrysler and these additives **must not be used.** The use of transmission “sealers” should also be avoided, since they may adversely affect the integrity of transmission seals.

DESCRIPTION - FUEL REQUIREMENTS

Your engine is designed to meet all emissions regulations and provide excellent fuel economy and performance when using high quality unleaded gasoline having an octane rating of 87. The use of premium gasoline is not recommended. The use of premium gasoline will provide no benefit over high quality regular gasoline, and in some circumstances may result in poorer performance.

Light spark knock at low engine speeds is not harmful to your engine. However, continued heavy spark knock at high speeds can cause damage and immediate service is required. Engine damage resulting from operation with a heavy spark knock may not be covered by the new vehicle warranty.

Poor quality gasoline can cause problems such as hard starting, stalling and hesitations. If you experience these symptoms, try another brand of gasoline before considering service for the vehicle.

Over 40 auto manufacturers world-wide have issued and endorsed consistent gasoline specifications (the Worldwide Fuel Charter, WWFC) to define fuel

FLUID TYPES (Continued)

properties necessary to deliver enhanced emissions, performance and durability for your vehicle. We recommend the use of gasolines that meet the WWFC specifications if they are available.

REFORMULATED GASOLINE

Many areas of the country require the use of cleaner burning gasoline referred to as "reformulated" gasoline. Reformulated gasoline contain oxygenates, and are specifically blended to reduce vehicle emissions and improve air quality.

We strongly support the use of reformulated gasoline. Properly blended reformulated gasoline will provide excellent performance and durability for the engine and fuel system components.

GASOLINE/OXYGENATE BLENDS

Some fuel suppliers blend unleaded gasoline with oxygenates such as 10% ethanol, MTBE, and ETBE. Oxygenates are required in some areas of the country during the winter months to reduce carbon monoxide emissions. Fuels blended with these oxygenates may be used in your vehicle.

CAUTION: DO NOT use gasoline containing METHANOL. Gasoline containing methanol may damage critical fuel system components.

MMT IN GASOLINE

MMT is a manganese-containing metallic additive that is blended into some gasoline to increase octane. Gasoline blended with MMT provide no performance advantage beyond gasoline of the same octane number without MMT. Gasoline blended with MMT reduce spark plug life and reduce emission system performance in some vehicles. We recommend that gasoline free of MMT be used in your vehicle. The MMT content of gasoline may not be indicated on the gasoline pump; therefore, you should ask your gasoline retailer whether or not his/her gasoline contains MMT.

It is even more important to look for gasoline without MMT in Canada because MMT can be used at levels higher than allowed in the United States. MMT is prohibited in Federal and California reformulated gasoline.

SULFUR IN GASOLINE

If you live in the northeast United States, your vehicle may have been designed to meet California low emission standards with Cleaner-Burning California reformulated gasoline with low sulfur. If such fuels are not available in states adopting California emission standards, your vehicles will operate satisfactorily on fuels meeting federal specifications, but emission control system performance may be adversely affected. Gasoline sold outside of California is permitted to have higher sulfur levels which may affect the performance of the vehicle's catalytic converter. This may cause the Malfunction Indicator Lamp (MIL), Check Engine or Service Engine Soon light to illuminate. We recommend that you try a different brand of unleaded gasoline having lower sulfur to determine if the problem is fuel related prior to returning your vehicle to an authorized dealer for service.

CAUTION: If the Malfunction Indicator Lamp (MIL), Check Engine or Service Engine Soon light is flashing, immediate service is required; see on-board diagnostics system section.

MATERIALS ADDED TO FUEL

All gasoline sold in the United States and Canada are required to contain effective detergent additives. Use of additional detergents or other additives is not needed under normal conditions.

FUEL SYSTEM CAUTIONS

CAUTION: Follow these guidelines to maintain your vehicle's performance:

- The use of leaded gas is prohibited by Federal law. Using leaded gasoline can impair engine performance, damage the emission control system, and could result in loss of warranty coverage.
- An out-of-tune engine, or certain fuel or ignition malfunctions, can cause the catalytic converter to overheat. If you notice a pungent burning odor or some light smoke, your engine may be out of tune or malfunctioning and may require immediate service. Contact your dealer for service assistance.
- When pulling a heavy load or driving a fully loaded vehicle when the humidity is low and the temperature is high, use a premium unleaded fuel to help prevent spark knock. If spark knock persists, lighten the load, or engine piston damage may result.
- The use of fuel additives which are now being sold as octane enhancers is not recommended. Most of these products contain high concentrations of methanol. Fuel system damage or vehicle performance problems resulting from the use of such fuels or additives is not the responsibility of DaimlerChrysler Corporation and may not be covered under the new vehicle warranty.

NOTE: Intentional tampering with emissions control systems can result in civil penalties being assessed against you.

FLUID TYPES (Continued)

DESCRIPTION - FUEL REQUIREMENTS - DIESEL ENGINE

WARNING: DO NOT USE ALCOHOL OR GASOLINE AS A FUEL BLENDING AGENT. THEY CAN BE UNSTABLE UNDER CERTAIN CONDITIONS AND HAZARDOUS OR EXPLOSIVE WHEN MIXED WITH DIESEL FUEL.

Use good quality diesel fuel from a reputable supplier. For most year-round service, number 2 diesel fuel meeting DIN EN 590 (Class 0 - 4) will provide good performance. If the vehicle is exposed to extreme cold (below -18°C/0°F) or is required to operate at colder than normal conditions for prolonged periods, use climatize No. 2 diesel fuel or dilute the No. 2 diesel fuel with 50% No. 1 diesel fuel as long as it meets ASTM D 975: 1D and 2D and the quality of lubrication behavior is in accordance with DIN EN 590. This will provide better protection from fuel gelling or wax plugging of the fuel filters.

Diesel fuel is seldom completely free of water. To prevent fuel system trouble, including fuel line freezing in winter, drain the accumulated water from the fuel/water separator using the fuel/water separator drain provided. If you buy good quality fuel and follow the cold weather advice above, fuel conditioners should not be required in your vehicle. If available in your area, a high cetane “premium” diesel fuel may offer improved cold starting and warm up performance.

DESCRIPTION - ENGINE OIL - DIESEL ENGINES

Use only Diesel Engine Oil meeting standard **MIL-2104C** or API Classification **CD or higher** or **CCML D4, D5**.

SAE VISCOSITY GRADE

CAUTION: Low viscosity oils must have the proper API quality or the CCMC G5 designation.

To assure of properly formulated engine oils, it is recommended that SAE Grade 10W-40 engine oils that meet Chrysler material standard MS-6395, be used in accordance to ACEA B3, B4 specification. European Grade 10W-40 oils are also acceptable.

Oils of the SAE 5W-40 grade number are preferred when minimum temperatures consistently fall below -15°C.

DESCRIPTION - AWD REAR DRIVELINE MODULE FLUIDS

The AWD Rear Driveline Module Assembly consists of two subassemblies, the Overrunning Clutch Housing (front) and the Differential Carrier (rear).

The recommended lubricant for the Overrunning Clutch Housing is Mopar® ATF+4. The recommended lubricant for the Differential Carrier is Mopar® 80W-90 Gear and Axle Lubricant.

DESCRIPTION - AWD POWER TRANSFER UNIT FLUID

The recommended lubricant for the AWD Power Transfer Unit is Mopar® Gear and Axle Lubricant 80W-90.

FLUID CAPACITIES

SPECIFICATIONS - FLUID CAPACITIES

DESCRIPTION	SPECIFICATION
Fuel Tank (Gas)	75 L (20 gal.)
Fuel Tank (Diesel)	75 L (20 gal.)
Engine Oil* - 2.4 L	4.7 L (5.0 qts.)
Engine Oil* - 3.3/3.8 L	4.7 L (5.0 qts.)
Engine Oil* - 2.5 L (Diesel)	6.0 L (6.3 qts.)
Cooling System** - 2.4 L	10.7 L (11.4 qts.)
Cooling System** - 2.5 L Turbo Diesel with Auxiliary Heater	13.8 L (14.6 qts.)
Cooling System** - 3.3/3.8 L without Auxiliary Heater	12.6 L (13.4 qts.)
Cooling System** - 3.3/3.8 L with Auxiliary Heater	15.4 L (16.3 qts.)
Automatic Transaxle - Service Fill	3.8 L (4.0 qts.)
Automatic Transaxle - 4XTE Overhaul Fill	9.2 L (9.7 qts.)
Manual Transaxle (T850 5-Speed)	2.4-2.7 L (2.5-2.9 qts.)
AWD Power Transfer Unit	1.15 L (2.4 pts.)
Power Steering	1.2 L (2.5 pts.)
AWD Bi-directional Overrunning Clutch	0.575 L (1.22 pts.)
AWD Rear Carrier	0.7 L (1.48 pts.)
* (includes oil filter)	
** (includes heater and recovery/reserve bottle)	

FLUID FILL/CHECK LOCATIONS

DESCRIPTION

The fluid check/fill point locations are located in each applicable service manual section.

LUBRICATION POINTS

DESCRIPTION

Lubrication point locations are located in each applicable Sections.

MAINTENANCE SCHEDULES

DESCRIPTION

DESCRIPTION

There are two maintenance schedules that show the **required** service for your vehicle.

First is Schedule **"B"**. It is for vehicles that are operated under the conditions that are listed below and at the beginning of the schedule.

- Day or night temperatures are below 32° F (0° C).
- Stop and go driving.
- Extensive engine idling.
- Driving in dusty conditions.
- Short trips of less than 10 miles (16 km).
- More than 50% of your driving is at sustained high speeds during hot weather, above 90° F (32° C).
- Trailer towing. ◇
- Taxi, police, or delivery service (commercial service). ◇
- Off-road or desert operation.

NOTE: Most vehicles are operated under the conditions listed for Schedule ″B″.

Second is Schedule **"A"**. It is for vehicles that are not operated under any of the conditions listed under Schedule ″B″.

Use the schedule that best describes your driving conditions. Where time and mileage are listed, follow the interval that occurs first.

CAUTION: Failure to perform the required maintenance items may result in damage to the vehicle.

At Each Stop for Fuel

- Check the engine oil level about 5 minutes after a fully warmed engine is shut off. Checking the oil level while the vehicle is on level ground will improve the accuracy of the oil level reading. Add oil only when the level is at or below the ADD or MIN mark.
- Check the windshield washer solvent and add if required.

Once a Month

- Check tire pressure and look for unusual wear or damage.
- Inspect the battery and clean and tighten the terminals as required.
- Check the fluid levels of coolant reservoir, brake master cylinder and transmission, add as needed.
- Check all lights and all other electrical items for correct operation.

At Each Oil Change

- Change the engine oil filter.
- Inspect the exhaust system.
- Inspect the brake hoses.
- Inspect the CV joints and front suspension components.
- Check the automatic transmission fluid level.
- Check the coolant level, hoses, and clamps.

SCHEDULE B

Follow schedule "B" if you usually operate your vehicle under one or more of the following conditions. Change the automatic transmission fluid and filter every 60,000 miles (96 000 km) if the vehicle is usually operated under one or more of the conditions marked with an ◇.

- Day or night temperatures are below 32° F (0° C).
- Stop and go driving.
- Extensive engine idling.
- Driving in dusty conditions.
- Short trips of less than 10 miles (16 km).
- More than 50% of your driving is at sustained high speeds during hot weather, above 90° F (32° C).
- Trailer towing. ◇
- Taxi, police, or delivery service (commercial service). ◇
- Off-road or desert operation.

MAINTENANCE SCHEDULES (Continued)

Miles (Kilometers)	**3, 000 (5 000)**	**6, 000 (10 000)**	**9, 000 (14 000)**	**12, 000 (19 000)**	**15, 000 (24 000)**	**18, 000 (29 000)**
Change engine oil and engine oil filter.	X	X	X	X	X	X
Rotate Tires		X		X		X
Inspect the brake linings.			X			X
Inspect the engine air cleaner filter, replace if necessary. *	X	X	X	X		X
Replace the **engine air cleaner filter.** *					X	
Replace the air conditioning filter.				X		

Miles (Kilometers)	**21, 000 (34 000)**	**24, 000 (38 000)**	**27, 000 (43 000)**	**30, 000 (48 000)**	**33, 000 (53 000)**	**36, 000 (58 000)**
Change engine oil and engine oil filter.	X	X	X	X	X	X
Rotate Tires		X		X		X
Inspect the brake linings.			X			X
Inspect the engine air cleaner filter, replace if necessary. *	X	X	X		X	X
Replace the **engine air cleaner filter.**				X		
Inspect the tie rod ends and boot seals.				X		
Inspect the **PCV valve**and replace as necessary.*				X		
Replace the air conditioning filter.		X				X

Miles (Kilometers)	**39, 000 (62 000)**	**42, 000 (67 000)**	**45, 000 (72 000)**	**48, 000 (77 000)**	**51, 000 (82 000)**	**54, 000 (86 000)**
Change engine oil and engine oil filter.	X	X	X	X	X	X
Rotate Tires		X		X		X
Inspect the brake linings.			X			X
Inspect the engine air cleaner filter, replace if necessary. *	X	X		X	X	X
Replace the **engine air cleaner filter.** *			X			
Replace the air conditioning filter.				X		

MAINTENANCE SCHEDULES (Continued)

Miles (Kilometers)	**57, 000 (91 000)**	**60, 000 (96 000)**	**63, 000 (101 000)**	**66, 000 (106 000)**	**69, 000 (110 000)**	**72, 000 (115 000)**
Change engine oil and engine oil filter.	X	X	X	X	X	X
Rotate Tires		X		X		X
Inspect the brake linings.			X			X
Inspect the engine air cleaner filter, replace if necessary. *	X		X	X	X	X
Replace the **engine air cleaner filter.**		X				
Inspect the tie rod ends and boot seals.		X				
Inspect the **PCV valve** and replace if necessary.*		X				
Inspect the serpentine drive belt on 3.3 liter and 3.8 liter engines, replace if necessary. ‡		X				
Change the automatic transmission fluid and filter. ◊		X				
Replace the air conditioning filter.		X				X

Miles (Kilometers)	**75, 000 (120 000)**	**78, 000 (125 000)**	**81, 000 (130 000)**	**84, 000 (134 000)**	**87, 000 (139 000)**	**90, 000 (144 000)**
Change engine oil and engine oil filter.	X	X	X	X	X	X
Rotate Tires		X		X		X
Inspect the brake linings.			X			X
Inspect the engine air cleaner filter, replace if necessary. *		X	X	X	X	
Replace the **engine air cleaner filter**	X					X
Replace the **spark plugs** on 3.3 liter and 3.8 liter engines.	X					
Replace the **ignition cables** 3.3 liter and 3.8 liter engines.	X					
Inspect the tie rod ends and boot seals.	X					
Check the **PCV valve** and replace if necessary. Not required if previously changed.*			X			
Inspect the serpentine drive belt on 3.3 liter and 3.8 liter engines, replace if necessary. ‡	X	X				
Replace the air conditioning filter.				X		

MAINTENANCE SCHEDULES (Continued)

Miles (Kilometers)	**93, 000 (149 000)**	**96, 000 (154 000)**	**99, 000 (158 000)**	**100, 000 (160 000)**	**102, 000 (163 000)**	**105, 000 (168 000)**
Change engine oil and engine oil filter.	X	X	X		X	X
Rotate Tires		X			X	
Inspect the brake linings.			X			
Inspect the engine air cleaner filter, replace if necessary. *	X	X	X	X	X	
Replace the **engine air cleaner filter** *						X
Inspect the serpentine drive belt on 3.3 liter and 3.8 liter engines, replace if necessary. ‡						X
Flush and replace the engine coolant at 60 months or 100,000 miles.				X		
Replace the air conditioning filter.		X				

Miles (Kilometers)	**108, 000 (173 000)**	**111, 000 (178 000)**	**114, 000 (182 000)**	**117, 000 (187 000)**	**120, 000 (192 000)**
Change engine oil and engine oil filter.	X	X	X	X	X
Rotate Tires	X		X		X
Inspect the brake linings.	X			X	
Inspect the engine air cleaner filter, replace if necessary. *	X	X	X	X	
Replace the **engine air cleaner filter.**					X
Inspect the tie rod ends and boot seals.					X
Inspect the **PCV valve** and replace as necessary.*					X
Inspect the serpentine drive belt on 3.3 liter and 3.8 liter engines, replace if necessary. ‡					X
Change the automatic transmission fluid and filter. ♢					X
Replace the air conditioning filter.	X				X

* This maintenance is recommended by the manufacture to the owner but is not required to maintain the emissions warranty.

‡ This maintenance is not required if previously replaced.

♢ This maintenance is required only for police, taxi, limousine type operation, or trailer towing.

Inspection and service should also be performed anytime a malfunction is observed or suspected. Retain all receipts.

MAINTENANCE SCHEDULES (Continued)

SCHEDULE A

Miles **(Kilometers)** **[Months]**	**6, 000** **(10 000)** **[6]**	**12, 000** **(19 000)** **[12]**	**18, 000** **(29 000)** **[18]**	**24, 000** **(38 000)** **[24]**	**30, 000** **(48 000)** **[30]**	**36, 000** **(58 000)** **[36]**
Change engine oil and engine oil filter.	X	X	X	X	X	X
Rotate Tires	X	X	X	X	X	X
Inspect the brake linings.			X			X
Inspect the engine air cleaner filter, replace if necessary. *	X	X	X	X		X
Replace the **engine air cleaner filter.**					X	
Inspect the tie rod ends and boot seals.					X	
Replace the air conditioning filter.		X		X		X

Miles **(Kilometers)** **[Months]**	**42, 000** **(67 000)** **[42]**	**48, 000** **(77 000)** **[48]**	**54, 000** **(86 000)** **[54]**	**60, 000** **(96 000)** **[60]**	**66, 000** **(106 000)** **[66]**	**72, 000** **(115 000)** **[72]**
Change engine oil and engine oil filter.	X	X	X	X	X	X
Rotate Tires	X	X	X	X	X	X
Inspect the brake linings.			X			X
Inspect the engine air cleaner filter, replace if necessary. *	X	X	X		X	X
Replace the **engine air cleaner filter.**				X		
Inspect the tie rod ends and boot seals.				X		
Check the **PCV valve** and replace, if necessary.*				X		
Inspect the serpentine drive belt on 3.3 liter and 3.8 liter engines, replace if necessary. ‡				X		X
Flush and replace the engine coolant at 60 months, regardless of mileage.				X		
Replace the air conditioning filter.		X		X		X

MAINTENANCE SCHEDULES (Continued)

Miles	**78, 000**	**84, 000**	**90, 000**	**96, 000**	**100, 000**
(Kilometers)	**(125 000)**	**(134 000)**	**(144 000)**	**(154 000)**	**(160 000)**
[Months]	**[78]**	**[84]**	**[90]**	**[96]**	
Change engine oil and engine oil filter.	X	X	X	X	
Rotate Tires	X	X	X	X	
Inspect the brake linings.			X		
Inspect the engine air cleaner filter, replace if necessary. *	X	X		X	X
Replace the **engine air cleaner filter.**			X		
Inspect the tie rod ends and boot seals.			X		
Check and replace the **PCV valve**, if necessary.*			X		
Inspect the serpentine drive belt on 3.3 liter and 3.8 liter engines, replace if necessary. ‡			X		
Replace the **spark plugs** 3.3 liter and 3.8 liter engines.					X
Replace the **ignition cables** 3.3 liter and 3.8 liter engines.					X
Flush and replace the engine coolant at 100,000 miles, if not done at 60 months.					X
Replace the air conditioning filter.		X		X	

Miles	**102, 000**	**108, 000**	**114, 000**	**120, 000**
(Kilometers)	**(163 000)**	**(173 000)**	**(182 000)**	**(192 000)**
[Months]	**[102]**	**[108]**	**[114]**	**[120]**
Change engine oil and engine oil filter.	X	X	X	X
Rotate Tires	X	X	X	X
Inspect the brake linings.		X		
Inspect the engine air cleaner filter, replace if necessary. *	X	X	X	
Replace the **engine air cleaner filter.**				X
Inspect the tie rod ends and boot seals.				X
Check the **PCV valve** and replace, if necessary.*				X
Inspect the serpentine drive belt on 3.3 liter and 3.8 liter engines, replace if necessary. ‡	X			X
Flush and replace the engine coolant at 120 months, if not done at 100,000 miles (160 000 km).				X
Replace the air conditioning filter.		X		X

* This maintenance is recommended by the manufacture to the owner but is not required to maintain the emissions warranty.

‡ This maintenance is not required if previously replaced.

Inspection and service should also be performed anytime a malfunction is observed or suspected. Retain all receipts.

WARNING: You can be badly injured working on or around a motor vehicle. Do only that service work for which you have the knowledge and the right equipment. If you have any doubt about your ability to perform a service job, take your vehicle to a competent mechanic.

MAINTENANCE SCHEDULES (Continued)

DESCRIPTION - EXPORT

There are two maintenance schedules that show the **required** service for your vehicle.

First is Schedule **"A"**. It is for vehicles that are not operated under any of the conditions listed under Schedule ″B″.

Second is Schedule **"B"**. It is for vehicles that are operated under the conditions that are listed below and at the beginning of the schedule.

- Day or night temperatures are below 0° C (32° F).
- Stop and go driving.
- Extensive engine idling.
- Driving in dusty conditions.
- Short trips of less than 16 km (10 miles).
- More than 50% of your driving is at sustained high speeds during hot weather, above 32° C (90° F).
- Trailer towing. ◊
- Taxi, police, or delivery service (commercial service). ◊
- Off-road or desert operation.

NOTE: Most vehicles are operated under the conditions listed for Schedule ″B″.

Use the schedule that best describes your driving conditions. Where time and mileage are listed, follow the interval that occurs first.

CAUTION: Failure to perform the required maintenance items may result in damage to the vehicle.

At Each Stop for Fuel

- Check the engine oil level about 5 minutes after a fully warmed engine is shut off. Checking the oil level while the vehicle is on level ground will improve the accuracy of the oil level reading. Add oil only when the level is at or below the ADD or MIN mark.
- Check the windshield washer solvent and add if required.

Once a Month

- Check tire pressure and look for unusual wear or damage.
- Inspect the battery and clean and tighten the terminals as required.
- Check the fluid levels of coolant reservoir, brake master cylinder and transmission, add as needed.
- Check all lights and all other electrical items for correct operation.

At Each Oil Change

- Change the engine oil filter.
- Inspect the exhaust system.
- Inspect the brake hoses.
- Inspect the CV joints and front suspension components.
- Check the automatic transmission fluid level.
- Check the manual transmission fluid level.
- Check the coolant level, hoses, and clamps.

SCHEDULE A - EXPORT ONLY

Kilometers **(Miles)** **[Months]**	**12 000** **(7,500)** **[6]**	**24 000** **(15,000)** **[12]**	**36 000** **(22,500** **[18]**	**48 000** **(30,000)** **[24]**	**60 000** **(37,500)** **[30]**	**72 000** **(45,000)** **[36]**
Change engine oil and engine oil filter.	X	X	X	X	X	X
Rotate Tires	X	X	X	X	X	X
Inspect the brake linings.			X			X
Inspect the engine air cleaner filter, replace if necessary. *	X	X	X		X	X
Replace the **engine air cleaner filter.**				X		
Replace the **spark plugs** on 2.4 liter engines.				X		
Inspect the tie rod ends and boot seals.				X		
Replace the air conditioning filter.		X		X		X

MAINTENANCE SCHEDULES (Continued)

Kilometers	**84 000**	**96 000**	**108 000**	**120 000**	**132 000**	**144 000**
(Miles)	**(52,500)**	**(60,000)**	**(67,500)**	**(75,000)**	**(82,500)**	**(90,000)**
[Months]	**[42]**	**[48]**	**[54]**	**[60]**	**[66]**	**[72]**
Change engine oil and engine oil filter.	X	X	X	X	X	X
Rotate Tires	X	X	X	X	X	X
Inspect the brake linings.			X			X
Inspect the engine air cleaner filter, replace if necessary. *	X		X	X	X	
Replace the **engine air cleaner filter.**		X				X
Replace the **spark plugs** on 2.4 liter engines.		X				X
Replace the **ignition cables** on 2.4 liter engines.		X				
Inspect and adjust the power steering pump belt tension on 2.4 liter engines.		X				X
Inspect the tie rod ends and boot seals.		X				X
Inspect the generator belt on 2.4 liter engines, replace if necessary.		X				X
Check the **PCV valve** and replace, if necessary.*		X				X
Inspect the serpentine drive belt on 3.3 liter engines, replace if necessary. ‡		X		X		X
Flush and replace the engine coolant at 60 months, regardless of mileage.				X		
Replace the air conditioning filter.		X		X		X

Kilometers	**156 000**	**160 000**	**168 000**	**180 000**	**192 000**
(Miles)	**(97,500)**	**(100,000)**	**(105,000)**	**(112,500)**	**(120,000)**
[Months]	**[78]**		**[84]**	**[90]**	**[96]**
Change engine oil and engine oil filter.	X		X	X	X
Rotate Tires	X		X	X	X
Inspect the brake linings.				X	
Inspect the engine air cleaner filter, replace if necessary. *	X	X	X	X	
Replace the **engine air cleaner filter.**					X
Replace the **spark plugs** on 2.4 liter engines.					X
Replace the **ignition cables** on 2.4 liter engines.					X

MAINTENANCE SCHEDULES (Continued)

Kilometers **(Miles)** **[Months]**	**156 000** **(97,500)** **[78]**	**160 000** **(100,000)**	**168 000** **(105,000)** **[84]**	**180 000** **(112,500)** **[90]**	**192 000** **(120,000)** **[96]**
Inspect the tie rod ends and boot seals.					X
Inspect and adjust the power steering pump belt tension on 2.4 liter engines.			X		X
Inspect the generator belt on 2.4 liter engines, replace if necessary.			X		X
Check and replace the **PCV valve**, if necessary.*					X
Inspect the serpentine drive belt on 3.3 liter engines, replace if necessary. ‡			X		X
Replace the **spark plugs** 3.3 liter engines.		X			
Replace the **ignition cables** 3.3 liter engines.		X			
Flush and replace the engine coolant at 100,000 miles, if not done at 60 months.		X			
Replace the **engine timing belt** on 2.4 liter engines only.					X
Replace the air conditioning filter.		X			

* This maintenance is recommended by the manufacture to the owner but is not required to maintain the emissions warranty.

‡ This maintenance is not required if previously replaced.

Inspection and service should also be performed anytime a malfunction is observed or suspected. Retain all receipts.

MAINTENANCE SCHEDULES (Continued)

SCHEDULE B - EXPORT ONLY

Follow schedule "B" if you usually operate your vehicle under one or more of the following conditions. Change the automatic transmission fluid and filter every 96 000 km (60,000 miles) if the vehicle is usually operated under one or more of the conditions marked with an ◇.

- Day or night temperatures are below 0° C (32° F).
- Stop and go driving.
- Extensive engine idling.
- Driving in dusty conditions.
- Short trips of less than 16 km (10 miles).
- More than 50% of your driving is at sustained high speeds during hot weather, above 32° C (90° F).
- Trailer towing.◇
- Taxi, police, or delivery service (commercial service).◇
- Off-road or desert operation.

Kilometers	**5 000**	**10 000**	**14 000**	**19 000**	**24 000**	**29 000**
(Miles)	**(3,000)**	**(6,000)**	**(9,000)**	**(12,000)**	**(15,000)**	**(18,000)**
Change engine oil and engine oil filter.	X	X	X	X	X	X
Rotate Tires		X		X		X
Inspect the brake linings.			X			X
Inspect the engine air cleaner filter, replace if necessary. *	X	X	X	X		X
Replace the **engine air cleaner filter.** *					X	
Inspect and adjust the power steering pump belt tension on 2.4 liter engines.					X	
Inspect the generator belt on 2.4 liter engines, replace if necessary.					X	
Change the All Wheel Drive (AWD) power transfer unit fluid. (See note at the end of this chart)					X	
Replace the air conditioning filter.					X	

Kilometers	**34 000**	**38 000**	**43 000**	**48 000**	**53 000**	**58 000**
(Miles)	**(21,000)**	**(24,000)**	**(27,000)**	**(30,000)**	**(33,000)**	**(36,000)**
Change engine oil and engine oil filter.	X	X	X	X	X	X
Rotate Tires		X		X		X
Inspect the brake linings.			X			X
Inspect the engine air cleaner filter, replace if necessary. *	X	X	X		X	X
Replace the **engine air cleaner filter.**				X		
Replace the **spark plugs** 2.4 liter engines.				X		
Inspect the tie rod ends and boot seals.				X		
Inspect and adjust the power steering pump belt tension on 2.4 liter engines.				X		

MAINTENANCE SCHEDULES (Continued)

Kilometers	**34 000**	**38 000**	**43 000**	**48 000**	**53 000**	**58 000**
(Miles)	**(21,000)**	**(24,000)**	**(27,000)**	**(30,000)**	**(33,000)**	**(36,000)**
Inspect the generator belt on 2.4 liter engines, replace if necessary.				X		
Inspect the **PCV valve**and replace as necessary.*				X		
Change the manual transmission fluid.	X					
Change the All Wheel Drive (AWD) power transfer unit fluid. (See note at the end of this chart)				X		
Change the All Wheel Drive (AWD) overrunning clutch and rear carrier fluid. (See the note at the end of this chart)	X					
Replace the air conditioning filter.				X		

Kilometers	**62 000**	**67 000**	**72 000**	**77 000**	**82 000**	**86 000**
(Miles)	**(39,000)**	**(42,000)**	**(45,000)**	**(48,000)**	**(51,000)**	**(54,000)**
Change engine oil and engine oil filter.	X	X	X	X	X	X
Rotate Tires		X		X		X
Inspect the brake linings.			X			X
Inspect the engine air cleaner filter, replace if necessary. *	X	X		X	X	X
Replace the **engine air cleaner filter.** *			X			
Inspect and adjust the power steering pump belt tension on 2.4 liter engines.			X			
Inspect the generator belt on 2.4 liter engines, replace if necessary.			X			
Change the manual transmission fluid.		X				
Change the All Wheel Drive power transfer unit fluid. (See the note at the end of this chart.)			X			
Change the All Wheel Drive (AWD) overrunning clutch and rear carrier fluid. (See note at the end of this chart)		X				
Replace the air conditioning filter.			X			

MAINTENANCE SCHEDULES (Continued)

Kilometers (Miles)	**91 000** (57,000)	**96 000** (60,000)	**101 000** (63,000)	**106 000** (66,000)	**110 000** (69,000)	**115 000** (72,000)
Change engine oil and engine oil filter.	X	X	X	X	X	X
Rotate Tires		X		X		X
Inspect the brake linings.			X			X
Inspect the engine air cleaner filter, replace if necessary. *	X		X	X	X	X
Replace the **engine air cleaner filter.**		X				
Replace the **spark plugs** on 2.4 liter engines.		X				
Replace the **ignition cables** on 2.4 liter engines.		X				
Inspect the tie rod ends and boot seals.		X				
Inspect and adjust the power steering pump belt tension on 2.4 liter engines.		X				
Inspect the generator belt on 2.4 liter engines, replace if necessary.		X				
Inspect the **PCV valve** and replace if necessary.*		X				
Inspect the serpentine drive belt on 3.3 liter engines, replace if necessary.		X				
Change the automatic transmission fluid and filter. ♢		X				
Change the manual transmission fluid.			X			
Change the All Wheel Drive (AWD) power transfer unit fluid. (See note at the end of this chart)		X		X		
Change the All Wheel Drive (AWD) overrunning clutch and rear carrier fluid. (See note at the end of this chart)			X			
Replace the air conditioning filter.		X				

MAINTENANCE SCHEDULES (Continued)

Kilometers (Miles)	**120 000 (75,000)**	**125 000 (78,000)**	**130 000 (81,000)**	**134 000 (84,000)**	**139 000 (87,000)**	**144 000 (90,000)**
Change engine oil and engine oil filter.	X	X	X	X	X	X
Rotate Tires		X		X		X
Inspect the brake linings.			X			X
Inspect the engine air cleaner filter, replace if necessary. *		X	X	X	X	
Replace the **engine air cleaner filter**	X					X
Replace the **spark plugs** on 3.3 liter engines.	X					
Replace the **ignition cables** on 3.3 liter engines.	X					
Replace the **spark plugs** on 2.4 liter engines.						X
Inspect and adjust the power steering pump belt tension on 2.4 liter engines.	X					X
Inspect the generator belt on 2.4 liter engines, replace if necessary.	X					X
Inspect the tie rod ends and boot seals.						X
Inspect engine accessory drive belts on 3.3 liter engines, replace if necessary. ‡	X					X
Change the manual transmission fluid.				X		
Check the **PCV valve** and replace if necessary. Not required if previously changed.*						X
Change the All Wheel Drive power transfer unit fluid. (See the note at the end of this chart.)	X					X
Change the All Wheel Drive (AWD) overrunning clutch and rear carrier fluid. (See note at the end of this chart)				X		
Replace the **engine timing belt** on 2.4 liter engines. *						X
Replace the air conditioning filter.	X					X

MAINTENANCE SCHEDULES (Continued)

Kilometers	**149 000**	**154 000**	**158 000**	**160 000**	**163 000**	**168 000**
(Miles)	**(93,000)**	**(96,000)**	**(99,000)**	**(100,000)**	**(102,000)**	**(105,000)**
Change engine oil and engine oil filter.	X	X	X		X	X
Rotate Tires		X			X	
Inspect the brake linings.			X			
Inspect the engine air cleaner filter, replace if necessary. *	X	X	X	X	X	
Replace the **engine air cleaner filter** *						X
Inspect and adjust the power steering pump belt tension on 2.4 liter engines.						X
Inspect the generator belt on 2.4 liter engines, replace if necessary.						X
Inspect engine accessory drive belts on 3.3 liter engines, replace if necessary. ‡						X
Change the manual transmission fluid.						X
Change the All Wheel Drive (AWD) power transfer unit, overrunning clutch and rear carrier fluid. (See note at the end of this chart)						X
Flush and replace the engine coolant at 60 months or 100,000 miles.				X		
Replace the air conditioning filter.						X

Kilometers	**173 000**	**178 000**	**182 000**	**187 000**	**192 000**
(Miles)	**(108,000)**	**(111,000)**	**(114,000)**	**(117,000)**	**(120,000)**
Change engine oil and engine oil filter.	X	X	X	X	X
Rotate Tires	X		X		X
Inspect the brake linings.	X			X	
Inspect the engine air cleaner filter, replace if necessary. *	X	X	X	X	
Replace the **engine air cleaner filter.**					X
Replace the **spark plugs** on 2.4 liter engines.					X
Replace the **ignition cables** on 2.4 liter engines.					X
Inspect and adjust the power steering pump belt tension on 2.4 liter engines.					X

MAINTENANCE SCHEDULES (Continued)

Kilometers (Miles)	173 000 (108,000)	178 000 (111,000)	182 000 (114,000)	187 000 (117,000)	192 000 (120,000)
Inspect the generator belt on 2.4 liter engines, replace if necessary.					X
Inspect engine accessory drive belts on 3.3 liter engines, replace if necessary. ‡					X
Inspect the tie rod ends and boot seals.					X
Inspect the **PCV valve** and replace as necessary.*					X
Change the automatic transmission fluid and filter. ◇					X
Change the All Wheel Drive (AWD) power transfer unit fluid. (See note at the end of this chart)					X
Replace the air conditioning filter.					X

* This maintenance is recommended by the manufacture to the owner but is not required to maintain the emissions warranty.

‡ This maintenance is not required if previously replaced.

◇ This maintenance is required only for police, taxi, limousine type operation, or trailer towing.

Inspection and service should also be performed anytime a malfunction is observed or suspected. Retain all receipts.

NOTE: The AWD power transfer unit fluid and the AWD overrunning clutch/ rear carrier fluid must be changed at the intervals shown in schedule B if the vehicle is operated under any of the conditions noted by a diamond at the beginning of the schedule.

WARNING: You can be badly injured working on or around a motor vehicle. Do only that service work for which you have the knowledge and the right equipment. If you have any doubt about your ability to perform a service job, take your vehicle to a competent mechanic.

DESCRIPTION - DIESEL ENGINES - EXPORT

There are two maintenance schedules that show the **required** service for your vehicle.

First is Schedule **"A"**. It is for vehicles that are not operated under any of the conditions listed under Schedule ″B″.

Second is Schedule **"B"**. It is for vehicles that are operated under the conditions that are listed below and at the beginning of the schedule.

- Extensive engine idling.
- Driving in dusty conditions.
- More than 50% of your driving is at sustained high speeds during hot weather, above 32° C (90° F).
- Trailer towing.
- Taxi, police, or delivery service (commercial service).

Most vehicles are operated under the conditions listed for Schedule ″B″.

Use the schedule that best describes your driving conditions. Where time and mileage are listed, follow the interval that occurs first.

Failure to perform the required maintenance items may result in damage to the vehicle.

At Each Stop for Fuel

- Check the engine oil level about 5 minutes after a fully warmed engine is shut off. Checking the oil level while the vehicle is on level ground will improve the accuracy of the oil level reading. Add oil only when the level is at or below the ADD or MIN mark.
- Check the windshield washer solvent and add if required.

Once a Month

- Check the tire pressure and look for unusual wear or damage.
- Inspect the battery and clean and tighten the terminals as required.
- Check the fluid levels of coolant deaeration bottle, brake master cylinder and transmission, add as needed.
- Check all lights and all other electrical items for correct operation.

MAINTENANCE SCHEDULES (Continued)

At Each Oil Change

- Change the engine oil filter.
- Inspect the exhaust system.
- Inspect the brake hoses.
- Inspect the CV joints and front suspension components.
- Check the manual transmission fluid level.
- Check the coolant level, hoses, and clamps.
- Inspect engine accessory drive belts. Replace as necessary.
- Inspect for the presence of water in the fuel filter/water separator unit.

SCHEDULE A - DIESEL ENGINES

Kilometers	20 000 km	40 000 km	60 000 km	80 000 km	100 000 km
Change engine oil and engine oil filter.	X	X	X	X	X
Rotate Tires	X	X	X	X	X
Replace engine air filter element	X	X	X	X	X
Replace fuel filter/water separator unit.	X	X	X	X	X
Inspect timing belt tensioner. ‡					X
Replace the engine timing belt and idler pulleys.					X
Check front end alignment.		X		X	
Inspect the tie rod ends and boot seals.		X		X	
Inspect the brake linings.	X	X	X	X	X

Kilometers	120 000 km	140 000 km	160 000 km	180 000 km	200 000 km
Change engine oil and engine oil filter.	X	X	X	X	X
Rotate Tires	X	X	X	X	X
Inspect accessory drive belts and replace if necessary.				X	
Replace engine air filter element	X	X	X	X	X
Replace fuel filter/water separator unit.	X	X	X	X	X
Replace the timing belt, idler pulleys and timing belt tensioner.					X
Flush and replace engine coolant.			X		
Check front end alignment.	X		X		X
Inspect the tie rod ends and boot seals.	X		X		X
Inspect the brake linings.	X	X	X	X	X

Inspection and service should also be performed anytime a malfunction is observed or suspected. Retain all receipts.

‡ Replace if there is superficial wear, bearing clearance, or evident grease leakage.

MAINTENANCE SCHEDULES (Continued)

SCHEDULE B - DIESEL ENGINES

Follow schedule “B” if you usually operate your vehicle under one or more of the following conditions.

- Extensive engine idling.
- Driving in dusty conditions.
- More than 50% of your driving is at sustained high speeds during hot weather, above 32° C (90° F).
- Trailer towing.
- Taxi, police, or delivery service (commercial service).

Kilometers	10 000 km	20 000 km	30 000 km	40 000 km	50 000 km
Change engine oil and engine oil filter.	X	X	X	X	X
Rotate Tires		X		X	
Replace engine air filter element	X	X	X	X	X
Replace engine accessory drive belt.					X
Replace the engine timing belt and idler pulleys.					X
Inspect timing belt tensioner. ‡					X
Replace fuel filter/water separator unit.		X		X	
Check front end alignment.		X		X	
Change the manual transaxle fluid.			X		
Inspect the tie rod ends and boot seals.				X	
Inspect the brake linings.	X	X	X	X	X

Kilometers	60 000 km	70 000 km	80 000 km	90 000 km	100 000 km
Change engine oil and engine oil filter.	X	X	X	X	X
Rotate Tires	X		X		X
Replace engine air filter element	X	X	X	X	X
Replace fuel filter/water separator unit.	X		X		X
Replace engine accessory drive belt.					X
Replace engine timing belt, idler pulleys and timing belt tensioner.					X
Check front end alignment.	X		X		
Change the manual transaxle fluid.	X			X	
Inspect the tie rod ends and boot seals.			X		
Inspect the brake linings.	X	X	X	X	X

Kilometers	110 000 km	120 000 km	130 000 km	140 000 km	150 000 km	160 000 km
Change engine oil and engine oil filter.	X	X	X	X	X	X
Rotate Tires		X		X		X
Replace engine air filter element	X	X	X	X	X	X
Replace engine accessory drive belt.					X	
Replace the engine timing belt and idler pulleys.					X	
Inspect timing belt tensioner. ‡					X	

MAINTENANCE SCHEDULES (Continued)

Kilometers	110 000 km	120 000 km	130 000 km	140 000 km	150 000 km	160 000 km
Replace fuel filter/water separator unit.		X		X		X
Flush and replace engine coolant.						X
Check front end alignment.	X		X		X	
Inspect the tie rod ends and boot seals.		X				X
Inspect the brake linings.	X	X	X	X	X	X

Inspection and service should also be performed anytime a malfunction is observed or suspected. Retain all receipts.

‡ Replace if there is superficial wear, bearing clearance, or evident grease leakage.

WARNING: You can be badly injured working on or around a motor vehicle. Do only that service work for which you have the knowledge and the right equipment. If you have any doubt about your ability to perform a service job, take your vehicle to a competent mechanic.

HOISTING

STANDARD PROCEDURE - HOISTING

Refer to Owner's Manual provided with vehicle for proper emergency jacking procedures.

WARNING: THE HOISTING AND JACK LIFTING POINTS PROVIDED ARE FOR A COMPLETE VEHICLE. WHEN THE ENGINE OR REAR SUSPENSION IS REMOVED FROM A VEHICLE, THE CENTER OF GRAVITY IS ALTERED MAKING SOME HOISTING CONDITIONS UNSTABLE. PROPERLY SUPPORT OR SECURE VEHICLE TO HOISTING DEVICE WHEN THESE CONDITIONS EXIST.

CAUTION: Do not position hoisting device on any suspension component, including the front suspension crossmember, the rear leaf springs, and the rear axle. Do not hoist on the front and rear bumpers, the lower liftgate crossmember, the lower radiator crossmember, the down standing flanges on the sill or the front engine mount.

FOR PROPER HOIST PLACEMENT REFER TO (Fig. 5).

The hoisting points are identified by S.A.E. inverted triangle hoisting symbols (Fig. 5). The front hoisting points are at the bottom of the font rail below the hoisting symbol approximately 250 mm behind the front suspension crossmember. When using outboard lift hoists, verify that the hoist lift pads have been properly adjusted to eliminate contact between the hoist arm and the down standing flange on the sill. The rear hoisting points are the leaf spring front mounting brackets. The hoist pad must be positioned to pick up the flanges on the bracket, not the leaf spring.

When servicing the leaf springs or the leaf spring mounting brackets, special provisions are required to support the rear of the vehicle. Position the rear hoist pads under the horizontal surface on the bottom of the sill, inboard adjacent to the flange and centered fore/aft between the jacking indicator tabs on the lower flange. **DO NOT HOIST ON THE FLANGE.** Place a soft pad between the hoist and the painted surface on the sill to avoid scratching the finish.

HOISTING (Continued)

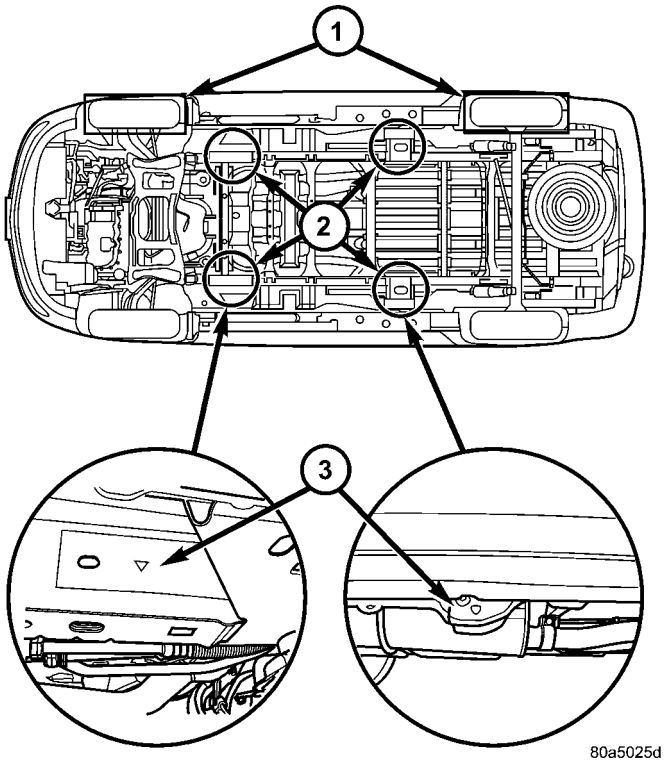

Fig. 5 HOISTING AND JACKING POINTS

1- DRIVE ON LIFT
2 - FRAME CONTACT LIFT (SINGLE POST)
2 - CHASSIS LIFT (NON-AXLE DUAL POST)
2 - OUTBOARD LIFT (DUAL POST)
2 - FLOOR JACK
3 - S.A.E. HOISTING SYMBOLS

JUMP STARTING

STANDARD PROCEDURE - JUMP STARTING

WARNING: REVIEW ALL SAFETY PRECAUTIONS AND WARNINGS. (Refer to 8 - ELECTRICAL/BATTERY SYSTEM/BATTERY - STANDARD PROCEDURE).

WARNING: DO NOT JUMP START A FROZEN BATTERY, PERSONAL INJURY CAN RESULT.

WARNING: DO NOT JUMP START WHEN MAINTENANCE FREE BATTERY INDICATOR DOT IS BRIGHT COLOR.

WARNING: DO NOT ALLOW JUMPER CABLE CLAMPS TO TOUCH EACH OTHER WHEN CONNECTED TO A BOOSTER SOURCE.

WARNING: DO NOT USE OPEN FLAME NEAR BATTERY

WARNING: REMOVE METALLIC JEWELRY WORN ON HANDS OR WRISTS TO AVOID INJURY BY ACCIDENTAL ARCING OF BATTERY CURRENT.

WARNING: WHEN USING A HIGH OUTPUT BOOSTING DEVICE, DO NOT ALLOW BATTERY VOLTAGE TO EXCEED 16 VOLTS.

WARNING: REFER TO INSTRUCTIONS PROVIDED WITH DEVICE BEING USED.

CAUTION: DO NOT ATTEMPT TO PUSH OR TOW THE VEHICLE TO START IT. THE VEHICLE CANNOT BE STARTED THIS WAY. PUSHING WITH ANOTHER VEHICLE MAY DAMAGE THE TRANSAXLE OR THE REAR OF THE VEHICLE.

(1) Raise hood on disabled vehicle and visually inspect engine compartment for:

- Battery cable clamp condition, clean if necessary.
- Frozen battery.
- Clear or bright color test indicator, if equipped.
- Generator drive belt condition and tension.
- Fuel fumes or leakage, correct if necessary.

CAUTION: If the cause of starting problem on disabled vehicle is severe, damage to booster vehicle charging system can result.

(2) When using another vehicle as a booster source, park the booster vehicle within cable reach. Turn off all accessories, set the parking brake, place the automatic transmission in PARK or the manual transmission in NEUTRAL and turn the ignition OFF.

(3) On disabled vehicle, place gear selector in park or neutral and set park brake. Turn off all accessories.

(4) Connect jumper cables to booster battery. RED clamp to positive terminal (+). BLACK clamp to negative terminal (-). DO NOT allow clamps at opposite end of cables to touch, electrical arc will result. Review all warnings in this procedure.

(5) On disabled vehicle, connect RED jumper cable clamp to positive (+) terminal. Connect BLACK jumper cable clamp to engine ground as close to the ground cable attaching point as possible (Fig. 6). (Refer to 8 - ELECTRICAL/BATTERY SYSTEM/BATTERY - STANDARD PROCEDURE).

(6) Start the engine in the vehicle which has the booster battery, let the engine idle a few minutes, then start the engine in the vehicle with the discharged battery.

JUMP STARTING (Continued)

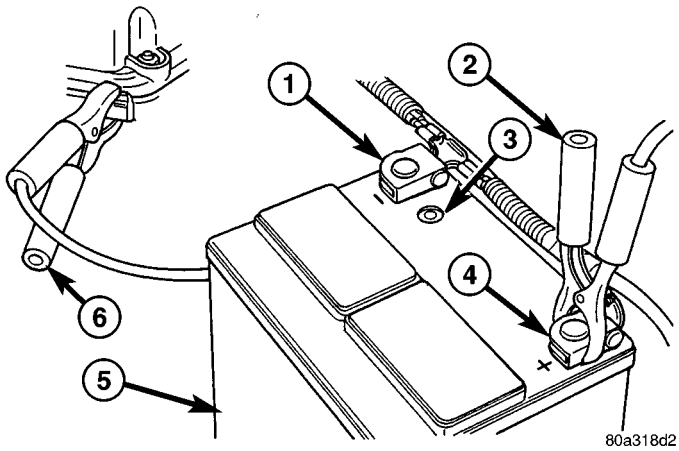

Fig. 6 JUMPER CABLE CLAMP CONNECTIONS

1 - BATTERY NEGATIVE TERMINAL
2 - POSITIVE JUMPER CABLE
3 - TEST INDICATOR (IF EQUIPPED)
4 - BATTERY POSITIVE TERMINAL
5 - BATTERY
6 - NEGATIVE JUMPER CABLE

CAUTION: Do not crank starter motor on disabled vehicle for more than 15 seconds, starter may overheat and could fail.

(7) If engine does not start within 15 seconds, stop cranking engine and allow starter to cool (15 minutes), before cranking again.

DISCONNECT CABLE CLAMPS AS FOLLOWS:

- Disconnect BLACK cable clamp from engine ground on disabled vehicle.
- When using a Booster vehicle, disconnect BLACK cable clamp from battery negative terminal. Disconnect RED cable clamp from battery positive terminal.
- Disconnect RED cable clamp from battery positive terminal on disabled vehicle.

TOWING

STANDARD PROCEDURE - TOWING

WARNINGS AND CAUTIONS

WARNING: DO NOT ALLOW TOWING ATTACHMENT DEVICES TO CONTACT THE FUEL TANK OR LINES, FUEL LEAK CAN RESULT.
DO NOT LIFT OR TOW VEHICLE BY FRONT OR REAR BUMPER.
DO NOT GO UNDER A LIFTED VEHICLE IF NOT SUPPORTED PROPERLY ON SAFETY STANDS.
DO NOT ALLOW PASSENGERS TO RIDE IN A TOWED VEHICLE.
USE A SAFETY CHAIN THAT IS INDEPENDENT FROM THE TOWING ATTACHMENT DEVICE.

CAUTION: Do not damage brake lines, exhaust system, shock absorbers, sway bars, or any other under vehicle components when attaching towing device to vehicle.
Do not secure vehicle to towing device by the use of front or rear suspension or steering components.
Remove or secure loose or protruding objects from a damaged vehicle before towing.
Refer to state and local rules and regulations before towing a vehicle.
Do not allow weight of towed vehicle to bear on lower fascia, air dams, or spoilers.

RECOMMENDED TOWING EQUIPMENT

To avoid damage to bumper fascia and air dams use:

- FWD vehicles, use of a flat bed towing device or a wheel lift is recommended (Fig. 7).
- AWD vehicles, a flat bed towing device or a wheel lift and towing dolly is recommended (Fig. 7).

When using a wheel lift towing device, be sure the disabled vehicle has at least 100 mm (4 in.) ground clearance. If minimum ground clearance cannot be reached, use a towing dolly. If a flat bed device is used, the approach angle should not exceed 15 degrees.

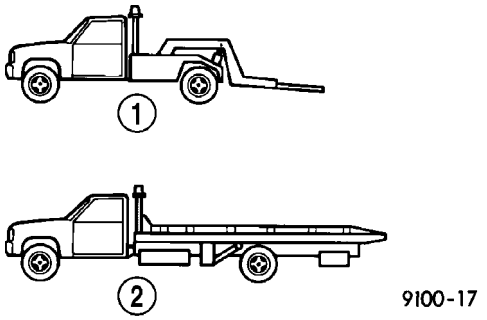

Fig. 7 RECOMMENDED TOWING

1 - WHEEL LIFT
2 - FLAT BED

GROUND CLEARANCE

CAUTION: If vehicle is towed with wheels removed, install lug nuts to retain brake drums or rotors.

A towed vehicle should be raised until the lifted wheels are a minimum 100 mm (4 in.) from the ground. Be sure there is at least 100 mm (4 in.) clearance between the tail pipe and the ground. If necessary, remove the wheels from the front end of the vehicle and lower the front end closer to the

TOWING (Continued)

ground, to increase the ground clearance at the rear of the vehicle. Install lug nuts on wheel attaching studs to retain brake drums or rotors.

LOCKED VEHICLE TOWING

When a locked vehicle must be towed with the front wheels on the ground, use a towing dolly or flat bed hauler.

FLAT TOWING WITH TOW BAR

- Three speed automatic transaxle vehicles can be flat towed at speeds not to exceed 40 km/h (25 mph) for not more than 25 km (15 miles). The steering column must be unlocked and gear selector in neutral.
- Four speed electronic automatic transaxle vehicles can be flat towed at speeds not to exceed 72 km/h (44 mph) for not more than 160 km (100 miles). The steering column must be unlocked and gear selector in neutral.
- AWD models should not be flat towed. For additional information, refer to **RECOMMENDED TOWING EQUIPMENT** in this section.

FLAT BED TOWING TIE DOWNS

CAUTION: Do not tie vehicle down by attaching chains or cables to suspension components or engine mounts, damage to vehicle can result.

The vehicle can be tied to a flat bed device using the two pair of front slots on the bottom surface of the rails, behind the front wheels. The two pair of rear slots on the bottom of the rail between the bumper extension bolts and on the bottom of the rail just rearward of the jounce bumper. Vehicles equipped with a rear sway bar have brackets at this location.

TOWING – FRONT WHEEL LIFT

If the vehicle is being towed from the front, whenever possible ensure at least 10 inches road clearance to the tires.

TOWING – REAR WHEEL LIFT

If a vehicle cannot be towed with the front wheels lifted, the rear wheels can be lifted provided the following guide lines are observed.

CAUTION: Do not use steering column lock to secure steering wheel during towing operation.

- On AWD vehicles, all four wheels must be free to rotate. Use towing dollies at unlifted end of vehicle.
- Unlock steering column and secure steering wheel in straight ahead position with a clamp device designed for towing.
- Three speed automatic transaxle vehicles can be flat towed at speeds not to exceed 40 km/h (25 mph) for not more than 25 km (15 miles). The steering column must be unlocked and gear selector in neutral.
- Four speed electronic automatic transaxle vehicles can be flat towed at speeds not to exceed 72 km/h (44 mph) for not more than 160 km (100 miles). The steering column must be unlocked and gear selector in neutral.

SUSPENSION

TABLE OF CONTENTS

page

FRONT SUSPENSION 1
REAR SUSPENSION 26
WHEEL ALIGNMENT 47

FRONT SUSPENSION

TABLE OF CONTENTS

page

FRONT SUSPENSION
DESCRIPTION - FRONT SUSPENSION 2
OPERATION - FRONT SUSPENSION 2
STANDARD PROCEDURE - LUBRICATION 2
SPECIFICATIONS
FRONT SUSPENSION FASTENER TORQUE . . 3
SPECIAL TOOLS
FRONT SUSPENSION 3
BUSHINGS
REMOVAL - STABILIZER BAR CUSHION 4
INSTALLATION - STABILIZER BAR CUSHION . . . 4
HUB / BEARING
DESCRIPTION 5
OPERATION 5
DIAGNOSIS AND TESTING - HUB AND BEARING 5
REMOVAL 5
INSTALLATION 5
KNUCKLE
DESCRIPTION 6
OPERATION 7
REMOVAL - STEERING KNUCKLE 7
INSPECTION - STEERING KNUCKLE 9
INSTALLATION - STEERING KNUCKLE 9
LOWER BALL JOINT
DESCRIPTION 10
OPERATION 10
DIAGNOSIS AND TESTING - LOWER BALL JOINT 10
LOWER BALL JOINT SEAL BOOT
DESCRIPTION - EXPORT 10
REMOVAL
REMOVAL 11
REMOVAL - EXPORT 11
INSTALLATION
INSTALLATION 11
INSTALLATION - EXPORT 11
LOWER CONTROL ARM
DESCRIPTION 12
OPERATION 12
REMOVAL - LOWER CONTROL ARM 12
DISASSEMBLY
DISASSEMBLY - LOWER CONTROL ARM (REAR BUSHING - STANDARD) 13
DISASSEMBLY - LOWER CONTROL ARM (REAR BUSHING - HYDRO) 13
INSPECTION - LOWER CONTROL ARM 14
ASSEMBLY
ASSEMBLY - LOWER CONTROL ARM (REAR BUSHING - STANDARD) 14
ASSEMBLY - LOWER CONTROL ARM (REAR BUSHING - HYDRO) 15
INSTALLATION - LOWER CONTROL ARM 15
STABILIZER BAR
DESCRIPTION 16
OPERATION 16
REMOVAL 17
INSPECTION 17
INSTALLATION 17
STRUT
DESCRIPTION - STRUT ASSEMBLY 19
OPERATION - STRUT ASSEMBLY 19
DIAGNOSIS AND TESTING - STRUT ASSEMBLY 20
REMOVAL - STRUT ASSEMBLY 20
DISASSEMBLY - STRUT ASSEMBLY 21
ASSEMBLY - STRUT ASSEMBLY 23
INSTALLATION - STRUT ASSEMBLY 25

FRONT SUSPENSION

DESCRIPTION - FRONT SUSPENSION

This vehicle has a MacPherson Strut type front suspension (Fig. 1).

OPERATION - FRONT SUSPENSION

The front suspension allows each wheel on a vehicle to adapt to different road surfaces and conditions without greatly affecting the opposite wheel and the ability to control the vehicle. Each side of the front suspension is allowed to pivot so the vehicle can be steered in the direction preferred.

A strut assembly is used in place of the front suspension upper control arm and upper ball joint. When a vehicle strikes a bump, the force is transferred through the hub, bearing, and knuckle, into the strut assembly to absorb the force and dampen it. The top of the strut is mounted directly to the strut tower of the vehicle. During steering maneuvers, the strut assembly (through a pivot bearing in the upper strut mount) and steering knuckle (through the lower ball joint) turn as an assembly.

STANDARD PROCEDURE - LUBRICATION

There are no serviceable lubrication points on the front suspension. The ball joints are sealed-for-life and require no maintenance. The lower ball joints have special grease fitting caps that prevent normal grease gun attachment. This has been done to eliminate the possibility of over-filling, damaging the non-vented seal. Do not attempt to remove the special grease fitting cap and replace it with a normal grease zirc fitting.

CAUTION: No attempt should be made to replace the ball joint grease fitting cap with a normal zirc fitting or fill the ball joint with grease. Damage to the grease seal can result.

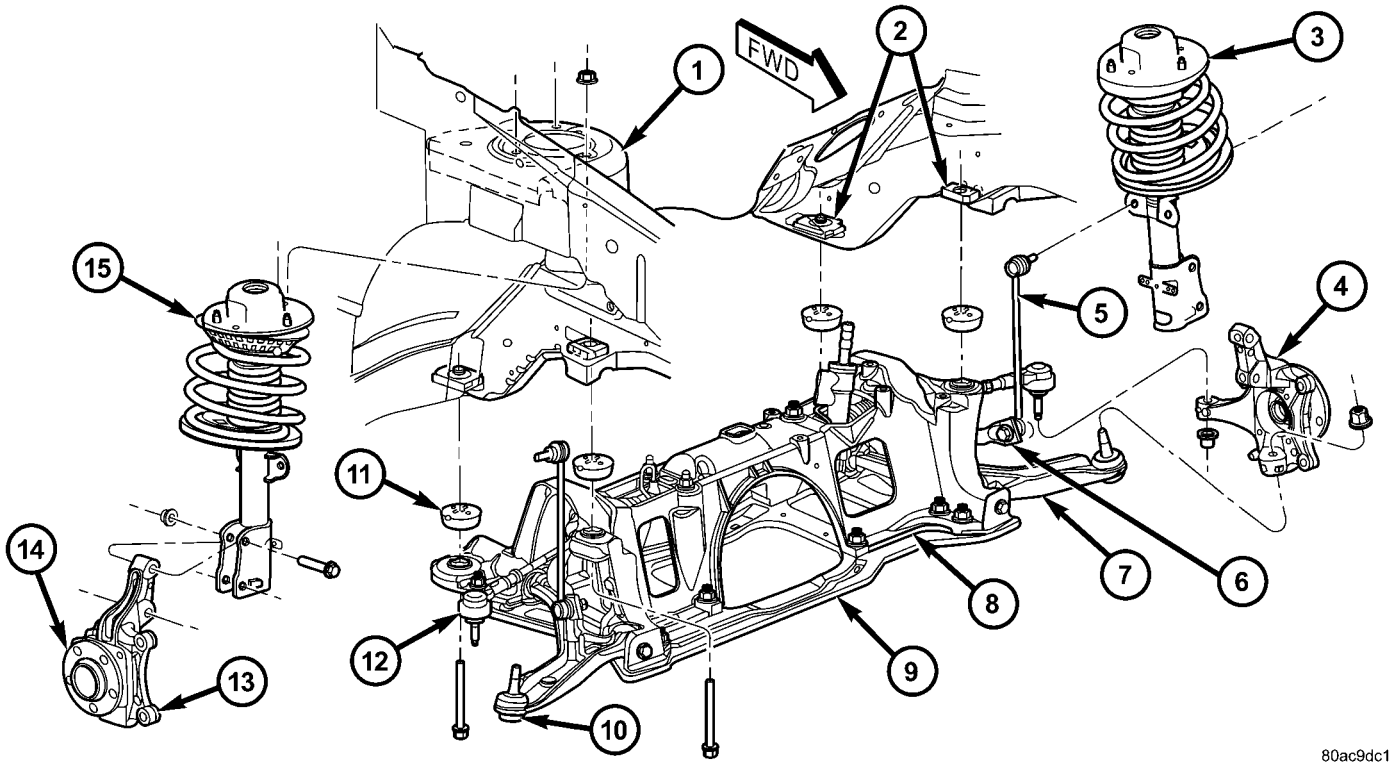

Fig. 1 Front Suspension

1 - TOWER
2 - CROSSMEMBER TAPPING PLATES
3 - LEFT STRUT ASSEMBLY
4 - LEFT STEERING KNUCKLE (WITH HUB AND BEARING)
5 - STABILIZER BAR LINK
6 - STABILIZER BAR
7 - LEFT LOWER CONTROL ARM
8 - CRADLE/CROSSMEMBER
9 - CRADLE/CROSSMEMBER REINFORCEMENT
10 - BALL JOINT
11 - ISOLATOR BUSHING
12 - STEERING GEAR TIE ROD
13 - RIGHT STEERING KNUCKLE
14 - RIGHT HUB AND BEARING
15 - RIGHT STRUT ASSEMBLY

FRONT SUSPENSION (Continued)

SPECIFICATIONS

FRONT SUSPENSION FASTENER TORQUE

DESCRIPTION	N·m	Ft. Lbs.	In. Lbs.
Ball Joint Nut	108	80	—
Cradle Crossmember Mounting Bolts	163	120	—
Cradle Crossmember Reinforcement Bolts - Size M-14	153	113	—
Cradle Crossmember Reinforcement Bolt - Size M-12	106	78	—
Cradle Crossmember Reinforcement Bolts - Size M-10	61	45	—
Disc Brake Adapter Mounting Bolts	169	125	—
Hub And Bearing Mounting Bolts	65	45	—
Hub And Bearing Axle Hub Nut	244	180	—
Lower Control Arm Pivot Bolt	183	135	—
Stabilizer Bar Bushing Retainer Bolts	68	50	—
Stabilizer Bar Link Nuts	88	65	—
Strut Body/Tower Mounting Nuts	28	21	250
Strut Clevis-to-Knuckle Nuts	81 + 90° turn	60 + 90° turn	—
Strut Shaft Nut	100	75	—
Tie Rod Adjuster Jam Nut	75	55	—
Tie Rod Steering Arm Nut	75	55	—
Wheel Mounting (Lug) Nuts	135	100	—

SPECIAL TOOLS

FRONT SUSPENSION

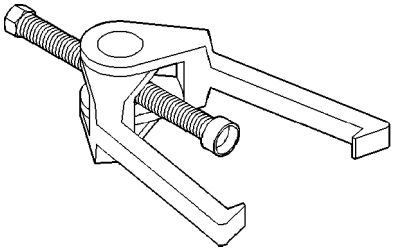

Puller C-3894A

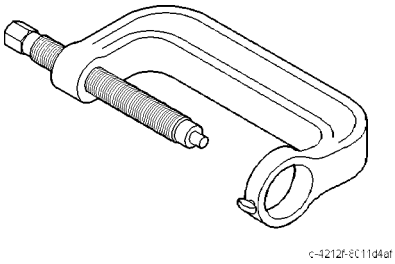

Press, Ball Joint C-4212F

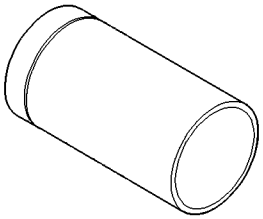

Installer, Ball Joint 6758

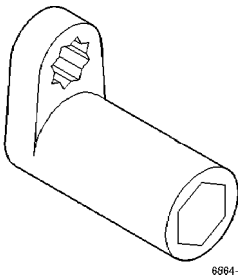

Wrench, Strut Rod Nut 6864

FRONT SUSPENSION (Continued)

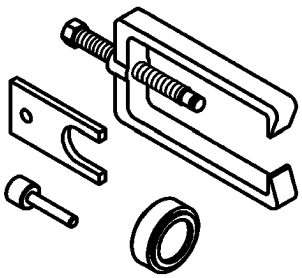

REMOVER/INSTALLER, BUSHING 8460

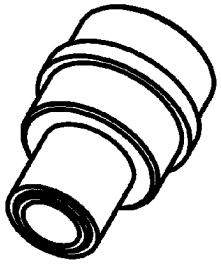

REMOVER/INSTALLER, BALL JOINT 8490

BUSHINGS

REMOVAL - STABILIZER BAR CUSHION

(1) Raise Vehicle. Refer to Hoisting in Lubrication and Maintenance.

(2) Remove the 2 bolts fastening the emission leak detection pump to the cradle crossmember reinforcement.

(3) Move the leak detection pump to the side allowing access to the stabilizer bar cushion retainers.

(4) Remove the nut and bolt securing each stabilizer bar cushion retainer to the cradle crossmember (Fig. 2) and remove the retainers.

(5) Remove each stabilizer bar cushion from the stabilizer bar by opening the slit in the cushion and peeling it off the stabilizer bar.

INSTALLATION - STABILIZER BAR CUSHION

(1) Install each new cushion on stabilizer bar by spreading cushion at slit and forcing it onto stabilizer bar.

NOTE: Cushions must be installed on stabilizer bar so the square corner of the bushing will be down and slit in cushion will be facing the rear of the vehicle when the stabilizer bar is installed (Fig. 3).

(2) Place stabilizer bar into mounted position with cushions properly aligned.

(3) Hook each retainer into cradle crossmember mounting hole and over cushion.

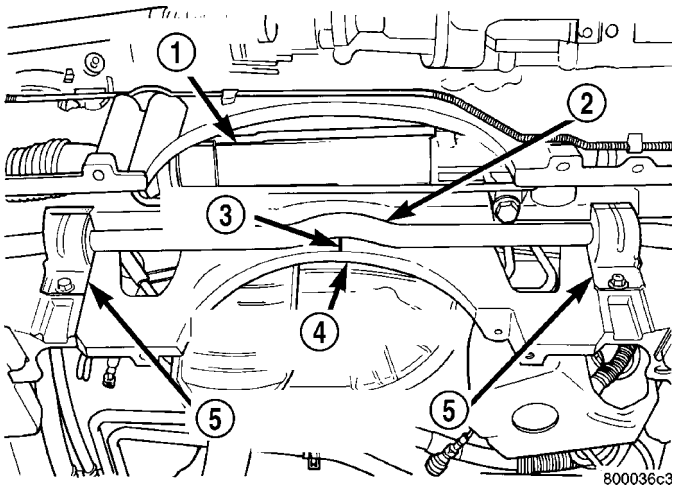

Fig. 2 Front Stabilizer Bar Cushion Retainers

1 - STEERING GEAR
2 - STABILIZER BAR
3 - RAISED BEAD
4 - FRONT CRADLE CROSSMEMBER
5 - RETAINERS

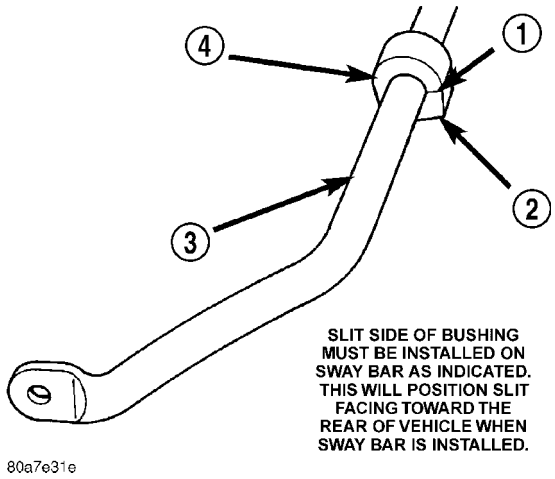

Fig. 3 Correctly Installed Stabilizer Bar Cushion

1 - SLIT IN SWAY BAR BUSHING.
2 - SQUARE CORNER
3 - SWAY BAR
4 - SWAY BAR ISOLATOR BUSHING

(4) Install each mounting bolt from rear of cradle crossmember through retainer. Install the two nuts and tighten to 68 N·m (50 ft. lbs.) torque.

(5) Reattach emission leak detection pump to cradle crossmember reinforcement with two mounting bolts.

(6) Lower the vehicle.

HUB / BEARING

DESCRIPTION

The front wheel bearing and front wheel hub of this vehicle are a hub and bearing unit type assembly (Unit III). This unit combines the front wheel mounting hub (flange) and the front wheel bearing into a sealed one-piece unit. The hub and bearing is mounted to the center of the steering knuckle (Fig. 1). It is retained by four mounting bolts accessible from the inboard side of the steering knuckle. The hub flange has five wheel mounting studs.

The wheel mounting studs used to mount the tire and wheel to the vehicle are the only replaceable components of the hub and bearing assembly. Otherwise, the hub and bearing is serviced only as a complete assembly.

OPERATION

The hub and bearing has internal bearings that allow the hub to rotate with the driveshaft, along with the tire and wheel. The five wheel mounting studs mount the tire and wheel, and brake rotor to the vehicle.

DIAGNOSIS AND TESTING - HUB AND BEARING

The condition of the front hub and bearing assembly is diagnosed using the inspection and testing procedure detailed below.

The bearing contained in the Unit III front hub/bearing assembly will produce noise and vibration when worn or damaged. The noise will generally change when the bearings are loaded. A road test of the vehicle is normally required to determine the location of a worn or damaged bearing.

Find a smooth level road surface and bring the vehicle up to a constant speed. When vehicle is at a constant speed, swerve the vehicle back and forth from the left and to the right. This will load and unload the bearings and change the noise level. When bearing damage is slight, the noise is sometimes noticeable at lower speeds and at other times is more noticeable at speeds above 105 km/h (65 mph).

REMOVAL

NOTE: Replacement of the Unit III front hub/bearing assembly can be normally done without having to remove the steering knuckle from the vehicle. In the event that the hub/bearing is frozen in the steering knuckle and cannot be removed by hand, it will have to be pressed out of the steering knuckle. The steering knuckle will require removal from the vehicle to allow the hub/bearing assembly to be pressed out of the steering knuckle. (Refer to 2 - SUSPENSION/FRONT/KNUCKLE - REMOVAL)

(1) Raise vehicle. (Refer to LUBRICATION & MAINTENANCE/HOISTING - STANDARD PROCEDURE)

(2) Remove wheel lug nuts, and front tire and wheel assembly.

(3) Remove the cotter pin, nut lock and spring washer from the stub axle (Fig. 4).

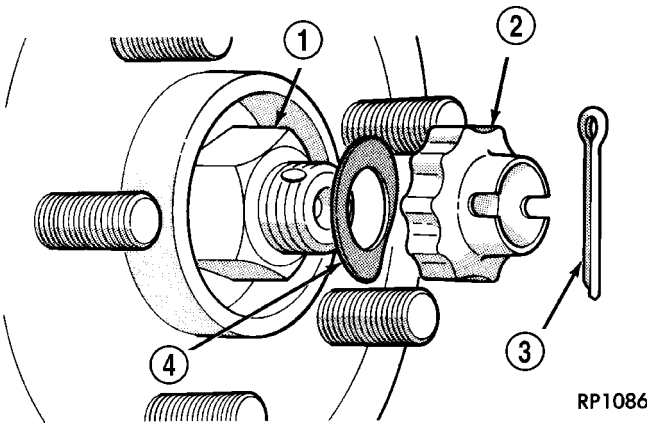

Fig. 4 Hub Nut

1 - HUB NUT
2 - NUT LOCK
3 - COTTER PIN
4 - SPRING WASHER

(4) With aid of a helper applying the brakes to keep the front hub from turning, remove the hub nut (Fig. 4).

(5) Remove disc brake caliper and adapter as an assembly from knuckle as shown (Fig. 5). Hang assembly out of the way using a bungee cord or wire. **Do not allow caliper hang by brake hose.**

(6) Remove brake rotor from hub and bearing (Fig. 5).

(7) Push in on end of driveshaft stub shaft, pushing its splines out of the hub splines.

(8) Remove the four hub and bearing mounting bolts from the rear of steering knuckle (Fig. 6). **Use care not to come in contact with and damage the ABS tone wheel on the driveshaft stub shaft upon bolt removal.**

(9) Remove the hub and bearing assembly from the steering knuckle.

INSTALLATION

CAUTION: Hub and bearing assembly mounting surfaces on the steering knuckle and stub axle (Fig. 7) must be smooth and completely free of foreign material or nicks prior to installing hub and bearing assembly.

HUB / BEARING (Continued)

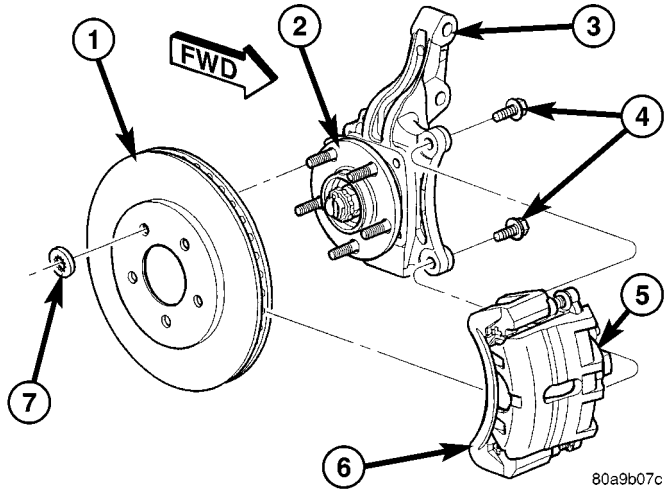

Fig. 5 Front Brake Mounting

1 - BRAKE ROTOR
2 - HUB AND BEARING
3 - STEERING KNUCKLE
4 - ADAPTER MOUNTING BOLTS
5 - BRAKE CALIPER
6 - ADAPTER
7 - CLIP

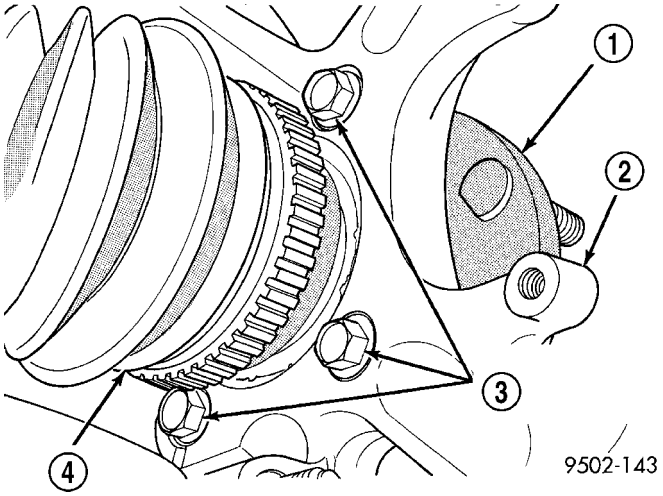

Fig. 6 Hub And Bearing Mounting Bolts

1 - HUB
2 - STEERING KNUCKLE
3 - MOUNTING BOLTS (4)
4 - DRIVESHAFT

CAUTION: When installing hub and bearing into steering knuckle, be careful not to damage the bearing seal (Fig. 7) on the outer C/V joint.

(1) Install hub and bearing onto stub axle and into steering knuckle until squarely seated on the face of the steering knuckle.

(2) Install the 4 hub and bearing mounting bolts from the rear of the knuckle. Equally tighten all 4 mounting bolts in a criss-cross pattern until hub/bearing assembly is squarely seated against front of steering knuckle. Tighten mounting bolts to a torque of 65 N·m (45 ft. lbs.)

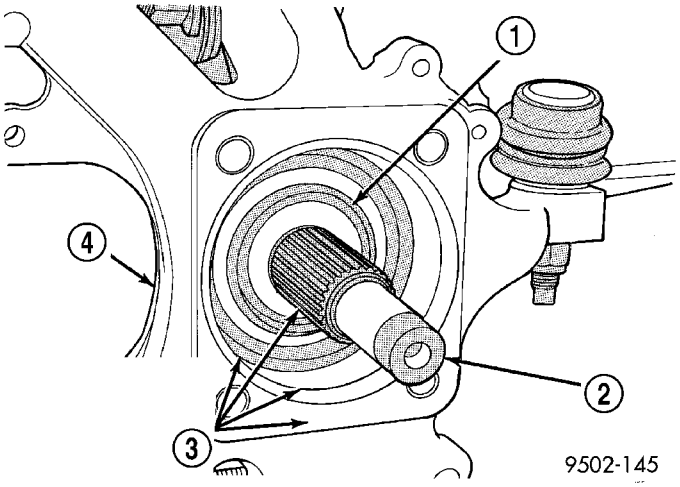

Fig. 7 Mounting Surfaces (Typical)

1 - BEARING SEAL
2 - STUB AXLE
3 - THESE SURFACES MUST BE CLEAN AND FREE OF NICKS BEFORE INSTALLING BEARING ASSEMBLY
4 - STEERING KNUCKLE

(3) Install the brake rotor on the hub and bearing (Fig. 5).

(4) Install brake caliper and adapter assembly back over brake rotor and align with mounting holes on steering knuckle (Fig. 5). Install the mounting bolts and tighten to 169 N·m (125 ft. lbs.) torque.

(5) Install the hub nut on the end of the stub axle (Fig. 4). With aid of a helper applying the brakes to keep the front hub from turning, tighten the hub nut to Install the mounting bolts and tighten to 244 N·m (180 ft. lbs.) torque.

(6) Install wheel and tire assembly on vehicle. Tighten the wheel mounting stud nuts in proper sequence until all nuts are torqued to half specification. Then repeat the tightening sequence to the full specified torque of 135 N·m (100 ft. lbs.).

(7) Lower vehicle to the ground.

(8) Check the front wheel alignment toe setting and reset if not within specifications. (Refer to 2 - SUSPENSION/WHEEL ALIGNMENT - STANDARD PROCEDURE)

KNUCKLE

DESCRIPTION

The steering knuckle is a single **aluminum** casting with legs machined for attachment of the strut assembly, steering linkage, disc brake caliper adapter, lower control arm ball joint and steering linkage (Fig. 1). The hub and bearing assembly is mounted in the center of the steering knuckle using

KNUCKLE (Continued)

4 bolts. The driveshaft's constant velocity (C/V) stub axle is splined through the center of the hub and bearing and is held in place using a nut, nut lock and cotter pin.

Service replacement of the front hub and bearing assembly can be done with the steering knuckle remaining on the vehicle.

OPERATION

The steering knuckle pivots with the strut assembly between the lower ball joint and the pivot bearing in the strut assembly. The steering gear outer tie rod end connects to the trailing end of each knuckle, allowing the vehicle to be steered.

The center of the knuckle supports the hub and bearing and axle shaft.

REMOVAL - STEERING KNUCKLE

(1) Raise vehicle. (Refer to LUBRICATION & MAINTENANCE/HOISTING - STANDARD PROCEDURE)

(2) Remove the wheel and tire assembly from the vehicle.

(3) Remove the cotter pin, nut lock and spring washer from the end of the stub axle and hub nut (Fig. 8).

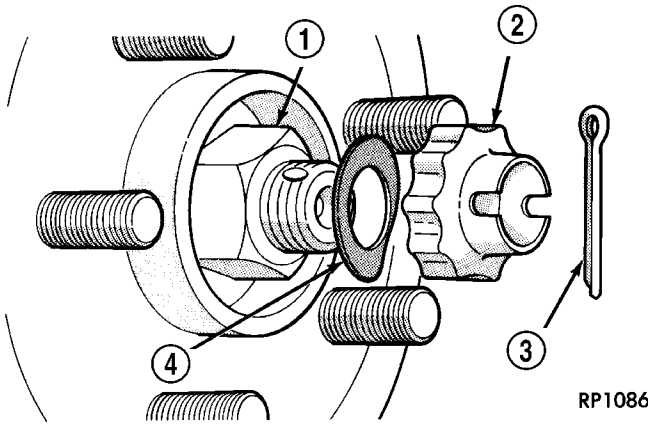

Fig. 8 Hub Nut

1 - HUB NUT
2 - NUT LOCK
3 - COTTER PIN
4 - SPRING WASHER

(4) Have a helper apply the vehicle's brakes to keep hub from turning, **loosen and remove** the hub nut (Fig. 8).

(5) Remove disc brake caliper and adapter as an assembly from knuckle as shown (Fig. 9). Hang assembly out of the way using a bungee cord or wire (Fig. 10). **Do not allow caliper to hang by brake hose.**

(6) Remove nut attaching outer tie rod end to steering knuckle by holding the tie rod end stud while loosening and removing nut with a wrench (Fig. 11).

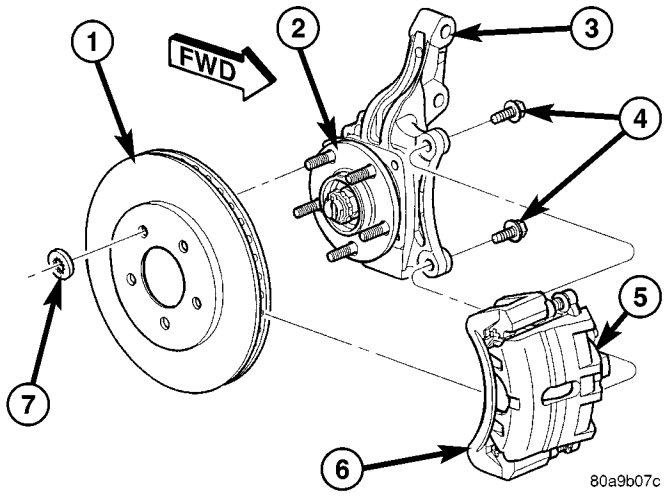

Fig. 9 Front Brake Mounting

1 - BRAKE ROTOR
2 - HUB AND BEARING
3 - STEERING KNUCKLE
4 - ADAPTER MOUNTING BOLTS
5 - BRAKE CALIPER
6 - ADAPTER
7 - CLIP

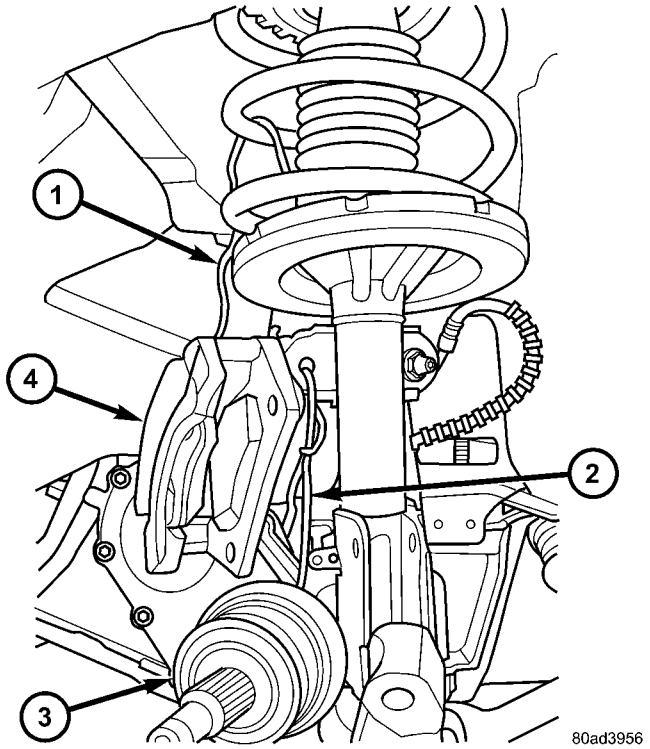

Fig. 10 Caliper And Driveshaft Suspended

1 - HANGER SUSPENDING CALIPER
2 - HANGER SUSPENDING DRIVESHAFT
3 - DRIVESHAFT
4 - BRAKE CALIPER

KNUCKLE (Continued)

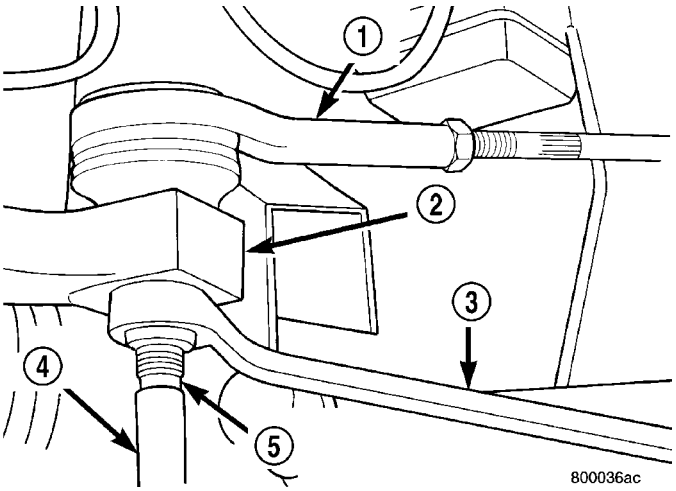

Fig. 11 Removing Tie Rod End Attaching Nut

1 - TIE ROD END
2 - STEERING KNUCKLE
3 - WRENCH
4 - SOCKET
5 - TIE ROD END STUD

(7) Remove tie rod end from steering knuckle using Remover, Special Tool C-3894–A (Fig. 12).

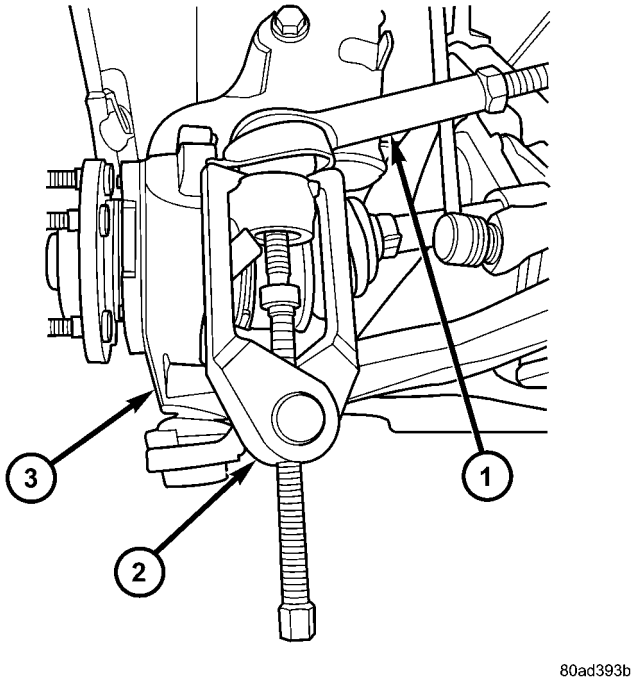

Fig. 12 Tie Rod Removal With Tool C-3894-A

1 - OUTER TIE ROD
2 - SPECIAL TOOL C-3894-A
3 - STEERING KNUCKLE

(8) If equipped with antilock brakes, remove the front wheel speed sensor from the steering knuckle (Fig. 13).

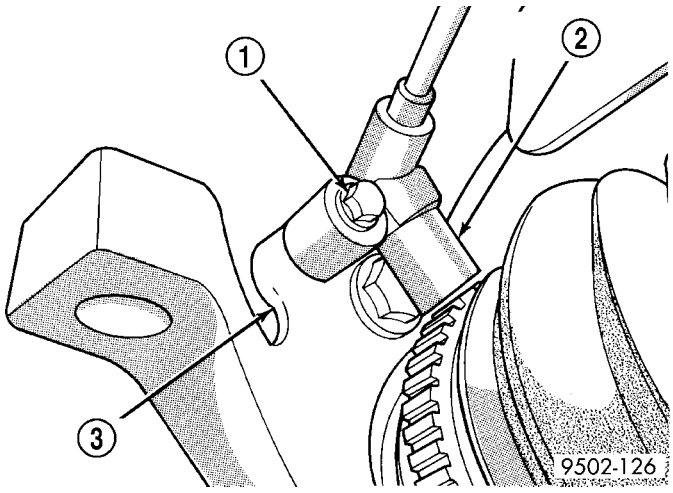

Fig. 13 Front Wheel Speed Sensor

1 - MOUNTING BOLT
2 - WHEEL SPEED SENSOR
3 - STEERING KNUCKLE

(9) Remove the two steering knuckle-to-strut clevis bracket attaching bolts.

(10) Tip the knuckle outward and remove the driveshaft stub axle from the hub and bearing. Suspend driveshaft straight outward using a bungee cord or wire (Fig. 10). **Do not allow driveshaft to hang by inner joint.**

(11) Remove ball joint nut using a power impact wrench. Because the tapered stud is held sufficiently in the knuckle at this time, it is not necessary to hold the stud stationary to remove the nut.

(12) Reinstall the ball joint nut until the top of the nut is even with the top of the ball joint stud. This will keep the stud from distorting while the stud is released from the knuckle in the following step.

CAUTION: Do not remove ball joint stud from steering knuckle using a hammer. Damage to the Aluminum knuckle, ball joint or control arm will result.

(13) Release ball joint stud from steering knuckle using Remover, Special Tool C-4150A, as shown (Fig. 14). To ease Remover installation and use, it may help to rotate the knuckle around so the inside of the knuckle faces outward.

(14) Remove the nut from the top of the ball joint stud.

(15) Remove the steering knuckle from the vehicle.

(16) If the hub and bearing needs to be transferred, remove the four bolts attaching the hub and bearing to the knuckle, then remove the hub and bearing.

KNUCKLE (Continued)

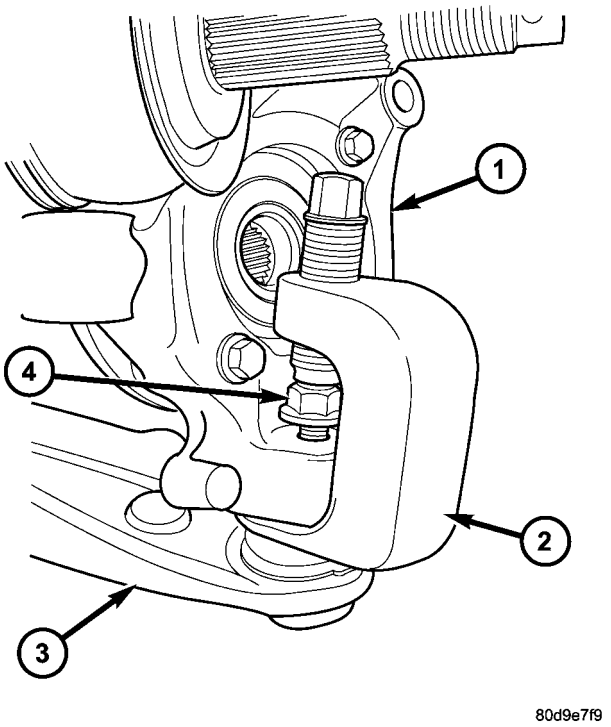

Fig. 14 Using C-4150A To Release Ball Joint

1 - ALUMINUM KNUCKLE
2 - SPECIAL TOOL C-4150A
3 - LOWER CONTROL ARM
4 - NUT INSTALLED ON BALL JOINT STEM

INSPECTION - STEERING KNUCKLE

Inspect the knuckle for the following:

- Cracks or breaks
- Dents or damage
- Stress marks indicating a bend

The front suspension knuckle is not a repairable component of the vehicles front suspension. If bent, broken or damaged in any way, do not attempt to straighten or repair the steering knuckle. It must be replaced.

If inspection leads to the hub and bearing, (Refer to 2 - SUSPENSION/FRONT/HUB / BEARING - DIAGNOSIS AND TESTING)

INSTALLATION - STEERING KNUCKLE

(1) If the hub and bearing needs to be installed in the knuckle, place the hub and bearing squarely into the center hole of the steering knuckle aligning the threaded mounting holes of the hub and bearing with the mounting holes in the steering knuckle. Install the four mounting bolts and tighten them to a torque of 65 N·m (45 ft. lbs.).

CAUTION: Before installing the knuckle on the ball joint stud, wipe the ball joint stud and knuckle contact area free of any grease or debris, otherwise damage to the knuckle can occur. Use a clean shop cloth with Mopar® Brake Parts Cleaner applied to it for proper cleaning. Do not spray the stud directly.

(2) Place the knuckle on the ball joint stud.

(3) Install a NEW steering knuckle to ball joint stud nut. Tighten the nut by holding ball joint stud with hex wrench while turning nut with a wrench (Fig. 15). Using a crowsfoot wrench on a torque wrench, tighten the nut to a torque of 108 N·m (80 ft. lbs.).

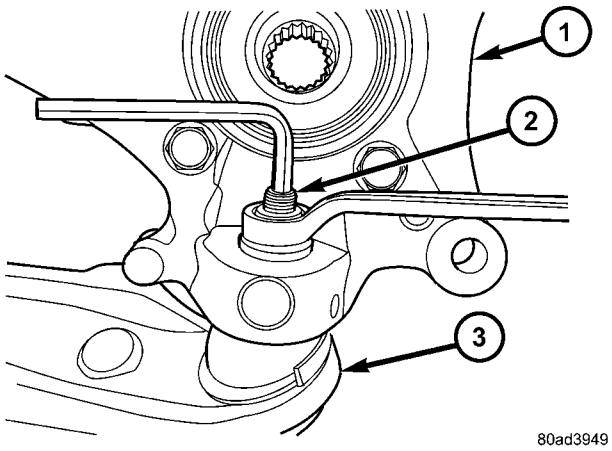

Fig. 15 Ball Joint Nut Installation

1 - KNUCKLE
2 - BALL JOINT STUD
3 - LOWER CONTROL ARM

(4) Slide driveshaft stub axle into hub and bearing assembly.

CAUTION: The steering knuckle to strut assembly attaching bolts are serrated and must not be turned during installation. Install nuts while holding bolts stationary in the steering knuckle.

CAUTION: If the vehicle being serviced is equipped with eccentric strut assembly attaching bolts, the eccentric bolt must be installed in the bottom (slotted) hole on the strut clevis bracket (Fig. 16).

NOTE: The strut clevis-to-steering knuckle bolts are installed differently on each side. Left hand side bolts are to be installed from vehicle rear to front. Right side bolts are to be installed from vehicle front to rear.

(5) Install steering knuckle in clevis bracket of strut damper assembly. Install the strut clevis-to-steering knuckle attaching bolts. Tighten both bolts to a torque of 81 N·m (60 ft. lbs.) plus an additional 1/4 (90°) turn.

KNUCKLE (Continued)

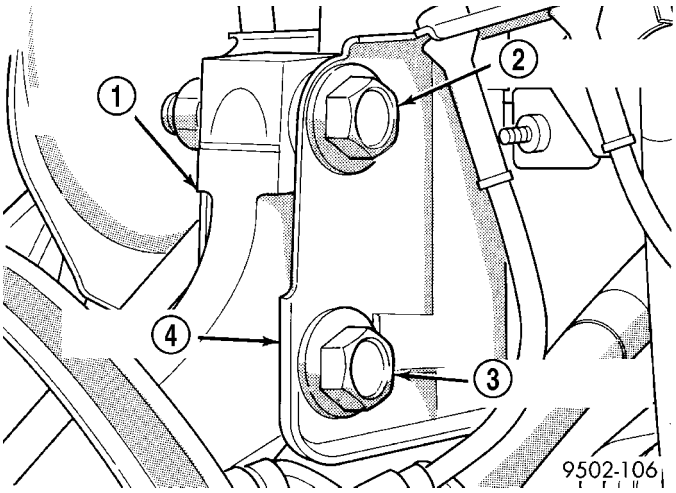

Fig. 16 Correctly Installed Eccentric Attaching Bolt

1 - STEERING KNUCKLE
2 - FLANGED BOLT IN TOP HOLE
3 - CAM BOLT IN BOTTOM HOLE
4 - STRUT CLEVIS BRACKET

(6) Install tie rod end into knuckle steering arm. Start nut onto stud of tie rod end. While holding stud of tie rod end stationary using a socket (Fig. 11), tighten tie rod end to steering knuckle attaching nut. Tighten the tie rod end nut to a torque of 75 N·m (55 ft. lbs.).

(7) If equipped with antilock brakes, install wheel speed sensor and mounting bolt on steering knuckle (Fig. 13). Tighten the speed sensor bolt to a torque of 7 N·m (60 in. lbs.).

(8) Install brake rotor on hub and bearing (Fig. 9).

(9) Install disc brake caliper and adapter assembly on steering knuckle. Install adapter amounting bolts and tighten to 169 N·m (125 ft. lbs.).

(10) Clean any debris from the threads of the outer C/V joint stub axle.

(11) Install the washer and hub nut on stub axle.

(12) Have a helper apply the vehicle's brakes to keep hub from turning, then tighten hub nut to a torque of 244 N·m (180 ft. lbs.).

(13) Install the spring wave washer on the end of the stub axle.

(14) Install the hub nut lock, and a **new** cotter pin (Fig. 8). Wrap cotter pin prongs tightly around the hub nut lock.

(15) Install wheel and tire assembly. Install and tighten the wheel mounting nuts in proper sequence until all nuts are torqued to half the required specification. Then repeat the tightening sequence to the full specified torque of 135 N·m (100 ft. lbs.).

(16) Lower vehicle.

(17) Set front wheel alignment camber and toe as necessary. (Refer to 2 - SUSPENSION/WHEEL ALIGNMENT - STANDARD PROCEDURE)

LOWER BALL JOINT

DESCRIPTION

The ball joint is an integral part of the lower control arm (Fig. 1). The ball joint has a tapered stud that is pressed into the aluminum knuckle. The ball joint stud is threaded on the end for a retainer nut.

The ball joint has a non-vented seal boot. The seal boot has an integrated heat shield.

The ball joint used in the lower control arm of this vehicle is a sealed-for-life ball joint and requires no maintenance lubrication. The ball joint has been lubricated-for-life during the manufacturing process. A special fitting cap is installed on the fill port. This cap must not be removed and replaced with a common zirc fitting. The special cap is there to eliminate the possibility of lubrication latter during the ball joints life, thus damaging the non-vented seal boot.

NOTE: The ball joint does not require any type of additional lubrication for the life of the vehicle. No attempt should be made to ever add any lubrication to the lower ball joint.

OPERATION

The ball joint is a pivotal joint on the lower control arm that allows the knuckle to move up and down, and turn with ease.

DIAGNOSIS AND TESTING - LOWER BALL JOINT

With the weight of the vehicle resting on the road wheels, grasp the special fitting cap on the bottom of the ball joint and with no mechanical assistance or added force, attempt to rotate the grease fitting.

If the ball joint is worn, the grease fitting will rotate easily. If movement is noted, replacement of the control arm is recommended.

LOWER BALL JOINT SEAL BOOT

DESCRIPTION - EXPORT

The lower ball joint seal boot is a two piece unit. It consists of the seal boot, plus a separate shield that is located in a groove at the top of the seal boot.

NOTE: The seal boot should only be replaced if damaged during vehicle service. The entire lower control arm should be replaced if the joint has been contaminated.

LOWER BALL JOINT SEAL BOOT (Continued)

REMOVAL

REMOVAL

(1) Remove steering knuckle from vehicle. (Refer to 2 - SUSPENSION/FRONT/KNUCKLE - REMOVAL)

(2) Using a screwdriver or other suitable tool, pry seal boot off of ball joint (Fig. 17).

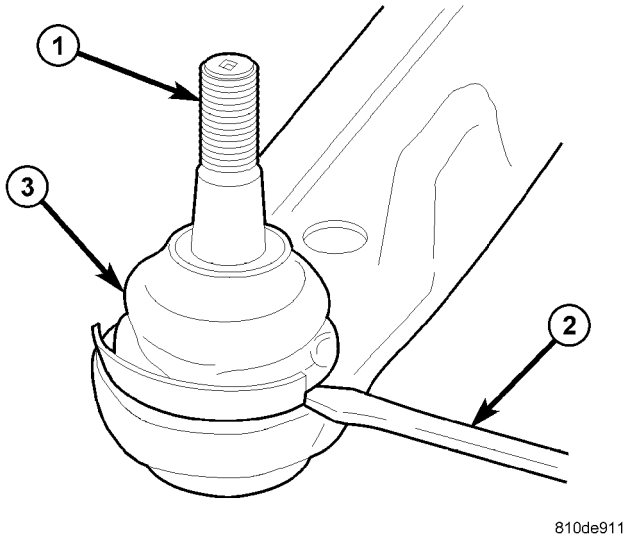

Fig. 17 Ball Joint Seal Boot Removal

1 - BALL JOINT STUD
2 - SCREWDRIVER
3 - SEAL BOOT

(3) Inspect ball joint for evidence of dirt or water intrusion and wipe clean as necessary. If dirt or water intrusion is extreme and joint cannot be properly cleaned, lower control arm will need to be replaced. (Refer to 2 - SUSPENSION/FRONT/LOWER CONTROL ARM - REMOVAL)

REMOVAL - EXPORT

(1) Remove steering knuckle from vehicle. (Refer to 2 - SUSPENSION/FRONT/KNUCKLE - REMOVAL)

(2) Remove shield from seal boot by gently pulling on it.

(3) Using a screw driver or other suitable tool, pry seal boot off lower ball joint.

INSTALLATION

INSTALLATION

(1) Place a liberal dab of Mopar® Wheel Bearing Grease around base of ball joint stud at socket.

(2) Install a **NEW** seal boot by hand as far as possible on ball joint. Ensure seal boot shield is positioned outward from control arm as shown (Fig. 18).

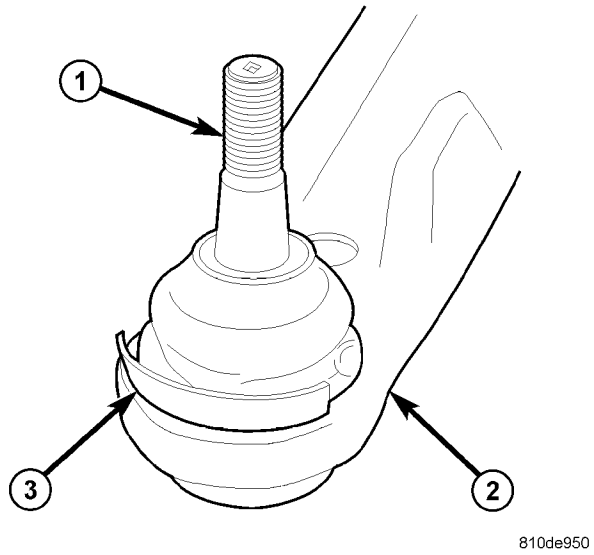

Fig. 18 Ball Joint Seal Boot Installed Position

1 - BALL JOINT STUD
2 - LOWER CONTROL ARM
3 - SEAL BOOT SHIELD

CAUTION: Do not use an arbor press to install seal boot on ball joint. Damage to seal boot will occur if excessive pressure is applied while it is being installed.

(3) Place Installer, Special Tool 6758, over top of seal boot and squarely align it with bottom edge of seal boot (Fig. 19). Apply hand pressure (or gently tap with a hammer if necessary) to top of Installer until seal boot is pressed squarely down against top surface of lower control arm.

(4) Wipe any grease off ball joint stem using a clean shop towel with Mopar® Brake Parts Cleaner applied to it.

CAUTION: Do not attempt to install a normal grease zirc in ball joint in an effort to lubricate joint through zirc fitting.

(5) Install steering knuckle on vehicle. (Refer to 2 - SUSPENSION/FRONT/KNUCKLE - INSTALLATION)

INSTALLATION - EXPORT

(1) Place a liberal dab of Mopar® Wheel Bearing Grease around the base of the ball joint stem at the socket.

(2) Install a **NEW** seal boot by hand as far as possible on the ball joint.

LOWER BALL JOINT SEAL BOOT (Continued)

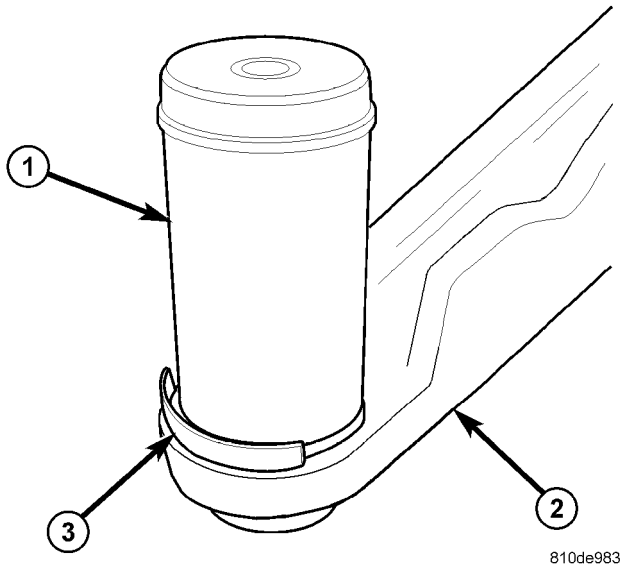

Fig. 19 Installer Positioned On Ball Joint Seal Boot

1 - INSTALLER 6758
2 - LOWER CONTROL ARM
3 - SEAL BOOT SHIELD

CAUTION: Do not use an arbor press to install the sealing boot on the ball joint. Damage to the sealing boot will occur if excessive pressure is applied to the sealing boot when it is being installed.

(3) Place Installer, Special Tool 6758, over seal boot and squarely align it with bottom edge of seal boot (Fig. 20). Apply hand pressure to Special Tool 6758 until seal boot is pressed squarely against top surface of lower control arm.

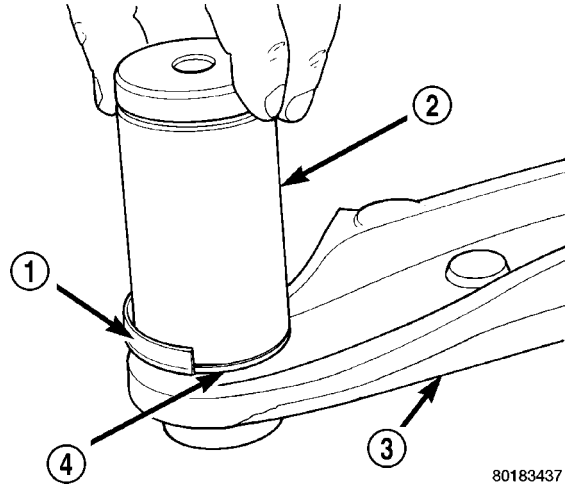

Fig. 20 Installing Ball Joint Seal Boot (Typical)

1 - SHIELD (NOT ON RG VEHICLE)
2 - SPECIAL TOOL 6758
3 - LOWER CONTROL ARM
4 - BALL JOINT SEAL BOOT

(4) Wipe any grease off the ball joint stem.

(5) Place the shield over the top of the seal boot and stretch it into the groove at the top of the seal boot.

CAUTION: Do not attempt to install a normal grease zirc in the ball joint and lubricate the joint through the zirc fitting.

(6) Reinstall steering knuckle on vehicle. (Refer to 2 - SUSPENSION/FRONT/KNUCKLE - INSTALLATION)

LOWER CONTROL ARM

DESCRIPTION

The lower control arm is mounted to the front suspension crossmember using a pivot bolt through the center of the front pivot bushing, and the front suspension cradle crossmember reinforcement traps the rear bushing in the crossmember (Fig. 1).

The lower control arm is an iron casting with two rubber bushings and a ball joint. The lower control arm front bushing is the spool type and is pressed into the lower control arm. The standard (Low-line, High-line) lower control arm rear bushing is a push-on bushing that is pushed over a stem on the rear of the lower control arm. The lower control arm rear bushing used on all other models is a hydro-bushing that is pressed on. It has liquid filled voids that provide more effective dampening than the standard bushing. Vehicles with rear hydro-bushings utilize a different lower control arm than vehicles with standard bushings. They have a straight slightly tapered round stem where the hydro-bushing is mounted whereas the standard arm has a straight stem with a squared knob on the end to retain the bushing.

The lower control arm ball joint is pressed into the outer end of the arm. The ball joint has a tapered stud and retainer nut for fastening it to the steering knuckle.

OPERATION

The lower control arm supports the lower end of the steering knuckle and allows for the up and down movement of the suspension during the jounce and rebound travel. The lower control arm ball joint connects the arm to the steering knuckle.

REMOVAL - LOWER CONTROL ARM

(1) Raise vehicle. (Refer to LUBRICATION & MAINTENANCE/HOISTING - STANDARD PROCEDURE)

(2) Remove wheel and tire assembly.

(3) Remove the steering knuckle. (Refer to 2 - SUSPENSION/FRONT/KNUCKLE - REMOVAL)

LOWER CONTROL ARM (Continued)

(4) Remove the bolts fastening the power steering cooler to the front suspension cradle crossmember reinforcement (Fig. 21).

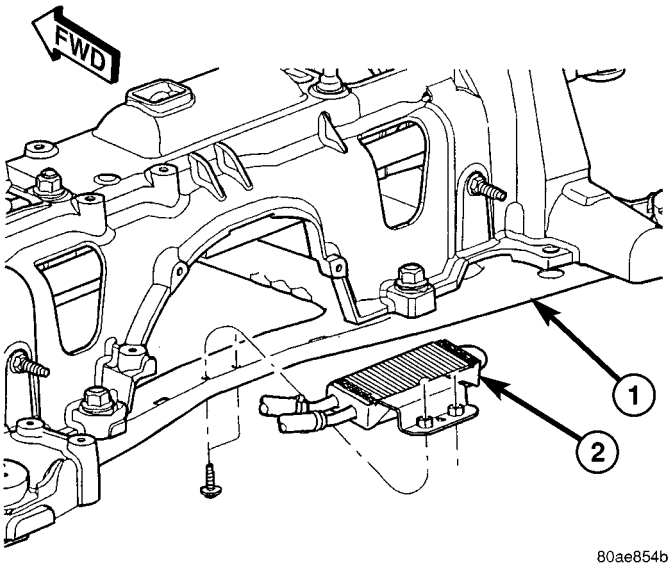

Fig. 21 Power Steering Cooler

1 - CRADLE CROSSMEMBER REINFORCEMENT
2 - POWER STEERING COOLER

(5) Remove the lower control arm rear bushing retainer bolts located on each side of each lower control arm rear bushing.

NOTE: The bolts fastening the cradle crossmember reinforcement are of three different thread sizes. Note the location of the various sizes.

(6) Remove the bolts attaching the cradle crossmember reinforcement to the front suspension cradle crossmember (Fig. 22). Remove the 2 bolts fastening the reinforcement and rear of cradle crossmember to the body of the vehicle. Remove the reinforcement.

(7) Remove the pivot bolt attaching the front bushing of the lower control arm to the front suspension cradle crossmember.

(8) Remove the lower control arm.

DISASSEMBLY

DISASSEMBLY - LOWER CONTROL ARM (REAR BUSHING - STANDARD)

(1) Remove the lower control arm from the front suspension cradle. (Refer to 2 - SUSPENSION/ FRONT/LOWER CONTROL ARM - REMOVAL)

(2) Mount the lower control arm in a vise **without** using excessive clamping force.

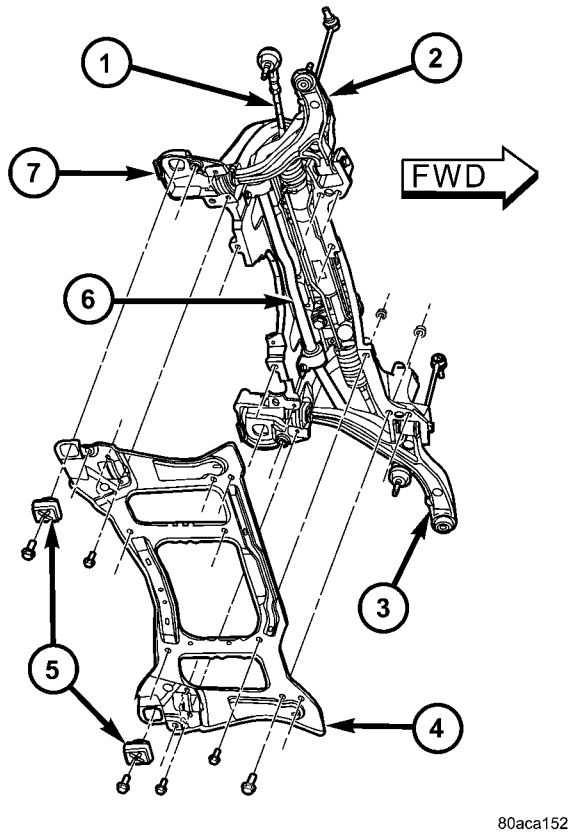

Fig. 22 Cradle Crossmember Reinforcement Attachment

1 - STEERING GEAR
2 - RIGHT LOWER CONTROL ARM
3 - LEFT LOWER CONTROL ARM
4 - CRADLE CROSSMEMBER REINFORCEMENT
5 - REAR CRADLE CROSSMEMBER ISOLATOR BUSHING
6 - STABILIZER BAR
7 - CRADLE CROSSMEMBER

(3) Using a sharp knife (such as a razor), slit the bushing lengthwise (Fig. 23) to allow its removal from the lower control arm (Fig. 23).

(4) Remove the bushing from the lower control arm.

DISASSEMBLY - LOWER CONTROL ARM (REAR BUSHING - HYDRO)

(1) Remove the lower control arm from the front suspension cradle. (Refer to 2 - SUSPENSION/ FRONT/LOWER CONTROL ARM - REMOVAL)

(2) Mount the lower control arm in a vise **without** using excessive clamping force.

(3) Install Remover, Special Tool 8460, on hydro-bushing as shown (Fig. 24). Removal Pin, Special Tool 8460–3, must extend though hole in center of bushing rear.

(4) Tighten forcing screw of Bridge (Special Tool 8460–1), removing bushing from lower control arm.

LOWER CONTROL ARM (Continued)

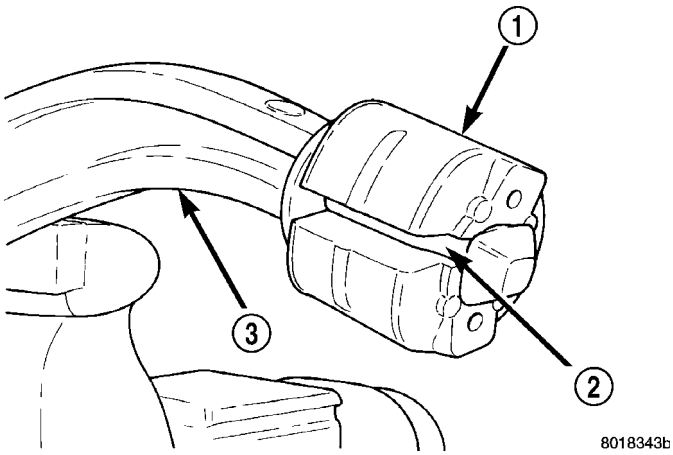

Fig. 23 Slit Lower Control Arm Rear Bushing

1 - REAR BUSHING
2 - SLIT CUT IN BUSHING
3 - LOWER CONTROL ARM

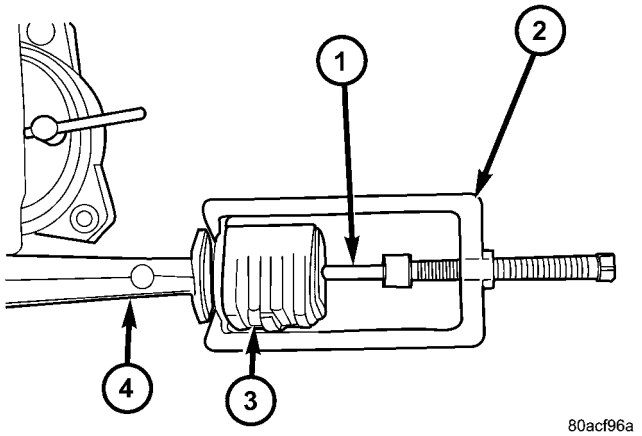

Fig. 24 HYDRO-BUSHING REMOVAL

1 - REMOVAL PIN (8460-3)
2 - BRIDGE (8460-1)
3 - HYDRO-BUSHING
4 - LOWER CONTROL ARM

INSPECTION - LOWER CONTROL ARM

Inspect lower control arm for signs of damage from contact with the ground or road debris. If lower control arm shows any sign of damage, inspect lower control arm for distortion. Do not attempt to repair or straighten a broken or bent lower control arm. If damaged, the lower control arm casting is serviced only as a complete component.

Inspect both lower control arm isolator bushings for severe deterioration, and replace as required. Inspect the rear hydro-bushing for seepage. Both type rear bushings are serviceable. If the front bushing fails, the lower control arm must be replaced.

Inspect and test the ball joint per the procedure listed in Lower Ball Joint. (Refer to 2 - SUSPENSION/FRONT/LOWER BALL JOINT - DIAGNOSIS AND TESTING)

ASSEMBLY

ASSEMBLY - LOWER CONTROL ARM (REAR BUSHING - STANDARD)

CAUTION: Do not apply grease or any other type of lubricant other than the silicone lubricant specified below to the control arm bushing.

(1) Apply Mopar Silicone Spray Lube or an equivalent, to the hole in lower control arm rear bushing. This will aid in the installation of the bushing on the lower control arm.

(2) With the lower control arm held securely in a vise, install bushing on lower control arm. Install bushing by pushing and rocking the bushing until it is fully installed on lower control arm. Be sure that when bushing is installed it is past the upset on the end of the lower control arm (Fig. 25).

(3) The rear bushing of the lower control arm, when correctly installed, is to be positioned on the lower control arm as shown (Fig. 25).

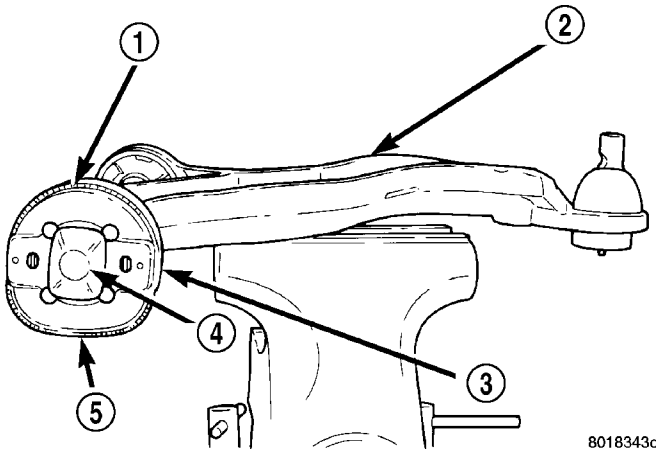

Fig. 25 Correctly Installed Lower Control Arm Bushing

1 - ROUND SURFACE OF BUSHING
2 - LOWER CONTROL ARM
3 - LOWER CONTROL ARM REAR BUSHING
4 - UPSET
5 - FLAT SURFACE OF BUSHING

(4) Install lower control arm on vehicle. (Refer to 2 - SUSPENSION/FRONT/LOWER CONTROL ARM - INSTALLATION)

LOWER CONTROL ARM (Continued)

ASSEMBLY - LOWER CONTROL ARM (REAR BUSHING - HYDRO)

CAUTION: Do not apply grease or any other type of lubricant to the arm stem where the bushing is to be mounted. Such action will reduce proper bushing adhesion to arm.

(1) Secure lower control arm in a vise.

NOTE: Hydro bushings and grooves on control arm stems are unique for right and left sides. Left side bushing master spline and control arm groove are on the top (when mounted on vehicle). Right side bushing master spline and control arm groove are on the bottom (when mounted on vehicle).

(2) Align master spline on bushing inner sleeve with groove on lower control arm rear bushing stem (Fig. 26). Start bushing on stem by hand.

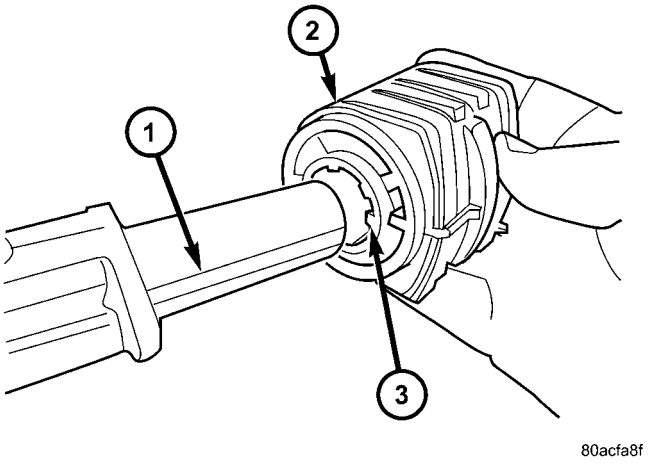

Fig. 26 BUSHING MASTER SPLINE LINED UP WITH GROOVE (RIGHT SIDE SHOWN)

1 - GROOVE
2 - HYDRO-BUSHING
3 - MASTER SPLINE

(3) Install Remover/Installer, Special Tool 8460, over bushing and lower control arm as shown (Fig. 27). Engage flange on lower control arm with tips of Bridge, Special Tool 8460–1 as shown (Fig. 27). The contoured side of Installer Cup, Special Tool 8460–2, should be fitted up against rear of the bushing.

(4) Begin to tighten forcing screw. As bushing nears lower control arm flange, place Spacer Plate, Special Tool 8460–4 between flange and bushing inner sleeve, straddling the stem as shown (Fig. 28).

(5) Install bushing up against Spacer Plate, tightening the bridge forcing screw with a torque wrench until approximately 50 N·m (37 ft. lbs.) torque is reached. This will properly space bushing on the stem in relation to the flange.

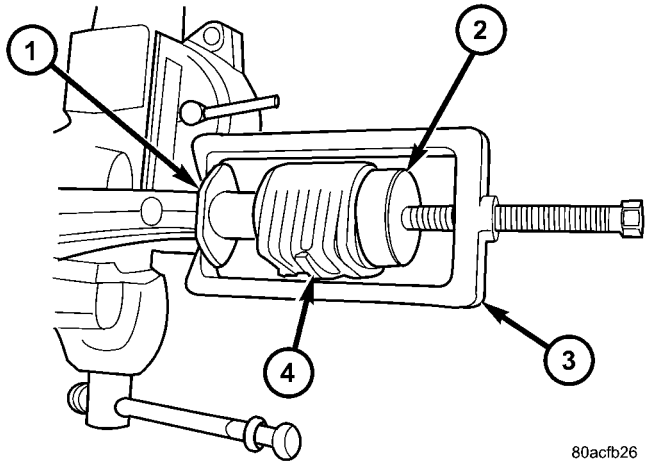

Fig. 27 HYDRO-BUSHING INSTALLATION

1 - LOWER CONTROL ARM FLANGE
2 - INSTALLER CUP (8460-2)
3 - BRIDGE (8460-1)
4 - HYDRO-BUSHING

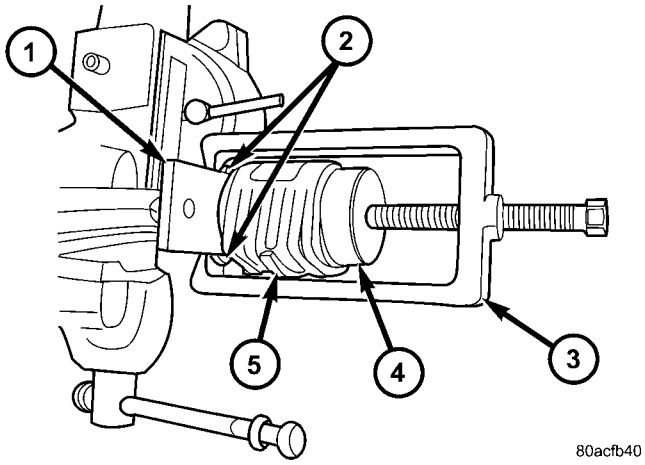

Fig. 28 SPACER PLATE POSITIONED

1 - SPACER PLATE (8460-4)
2 - LOWER CONTROL ARM FLANGE
3 - BRIDGE (8460-1)
4 - INSTALLER CUP (8460-2)
5 - HYDRO-BUSHING

(6) Back off the forcing screw and remove tool.

(7) Install lower control arm on vehicle. (Refer to 2 - SUSPENSION/FRONT/LOWER CONTROL ARM - INSTALLATION)

INSTALLATION - LOWER CONTROL ARM

(1) Position lower control arm assembly into front suspension cradle crossmember guiding bushings into mounting position (Fig. 22).

(2) Install NEW pivot bolt attaching front bushing of lower control arm to front suspension cradle crossmember (Fig. 29). **Do not tighten or torque pivot bolt at this time.**

LOWER CONTROL ARM (Continued)

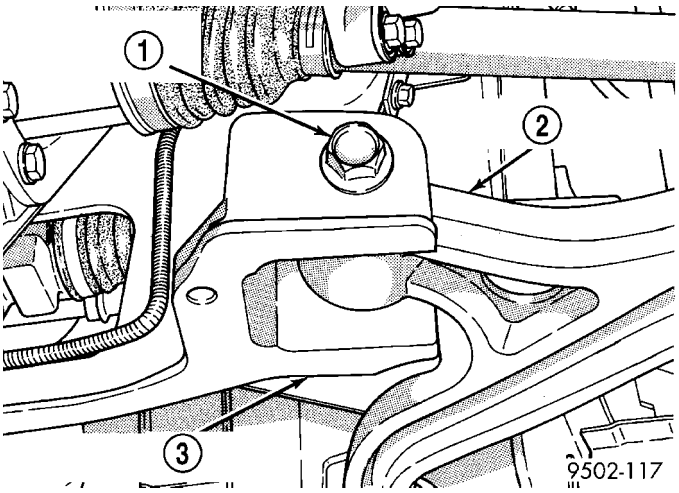

Fig. 29 Lower Control Arm Bushing Pivot Bolt Correctly Installed

1 - PIVOT BOLT
2 - LOWER CONTROL ARM
3 - FRONT SUSPENSION CRADLE CROSSMEMBER

(3) Install the reinforcement on the front suspension cradle crossmember and install the bolts attaching the reinforcement to the cradle crossmember (Fig. 22). Tighten the M-14 size bolts to a torque of 153 N·m (113 ft. lbs.). Tighten the M-12 size bolts to a torque of 106 N·m (78 ft. lbs.).

(4) Install the lower control arm rear bushing retainer bolts through reinforcement on each side of each lower control arm rear bushing. Tighten these M-10 size bolts to a torque of 61 N·m (45 ft. lbs.).

(5) Install the two bolts and bushings attaching the reinforcement and rear of cradle crossmember to body of vehicle (Fig. 22). Tighten bolts to a torque of 163 N·m (120 ft. lbs.).

(6) Install the power steering cooler (Fig. 21). Tighten bolts to a torque of 11 N·m (100 in. lbs.).

(7) Reinstall steering knuckle, brake rotor and caliper. (Refer to 2 - SUSPENSION/FRONT/KNUCKLE - INSTALLATION)

CAUTION: When locating jack stands under lower control arms, do not place the jack stands under the ball joints (Fig. 30).

(8) Position jack stands under the lower control arms as close to the ball joints as possible (Fig. 30). Lower the vehicle onto the jack stands until the jack stands are supporting the total weight of the vehicle.

(9) Tighten front lower control arm pivot bolt to a torque of 183 N·m (135 ft. lbs.).

(10) Install the wheel and tire assembly. Install and tighten the wheel mounting stud nuts in proper sequence until all nuts are torqued to half specification. Then repeat the tightening sequence to the full specified torque of 135 N·m (100 ft. lbs.).

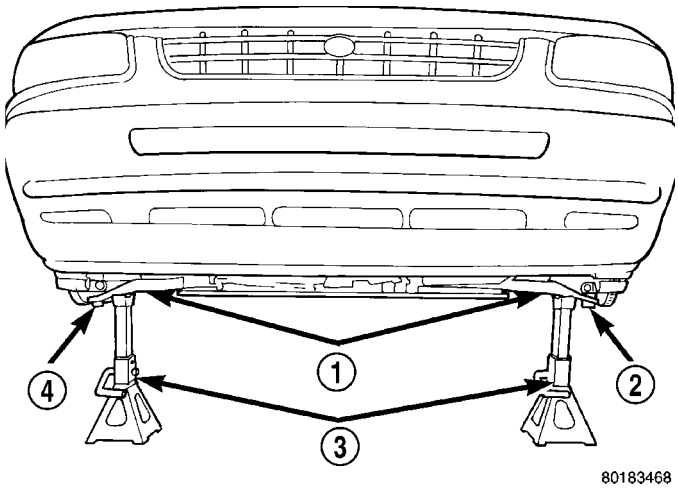

Fig. 30 Jack Stands Supporting Vehicle Weight

1 - LOWER CONTROL ARMS
2 - BALL JOINT
3 - JACK STANDS
4 - BALL JOINT

(11) Raise vehicle, remove jack stands and lower vehicle to the ground.

(12) Perform front wheel alignment as necessary. (Refer to 2 - SUSPENSION/WHEEL ALIGNMENT - STANDARD PROCEDURE)

STABILIZER BAR

DESCRIPTION

The stabilizer bar interconnects both front struts of the vehicle and is attached to the front crossmember (Fig. 1).

Attachment of the stabilizer bar to the front crossmember is through 2 rubber-isolator cushion bushings and retainers. A double ball jointed stabilizer bar link is used to attach each end of the stabilizer bar to the front strut assemblies. All parts of the stabilizer bar are replaceable as individual components.

The stabilizer bar to front crossmember cushion bushings are split for easy removal and installation. The split in the bushings should be positioned toward the rear of the vehicle, with the square corner facing down, when the stabilizer bar is installed.

OPERATION

Jounce and rebound movements affecting one wheel are partially transmitted to the opposite wheel of the vehicle through the stabilizer bar. This helps to minimize the body roll of the vehicle during suspension movement.

Connecting the stabilizer bar links to the strut assemblies helps reduce the fore-and-aft rate of the stabilizer bar from the rest of the front suspension.

STABILIZER BAR (Continued)

REMOVAL

(1) Raise vehicle. (Refer to LUBRICATION & MAINTENANCE/HOISTING - STANDARD PROCEDURE)

(2) Remove the bolts fastening the power steering cooler to the front suspension cradle crossmember reinforcement (Fig. 31).

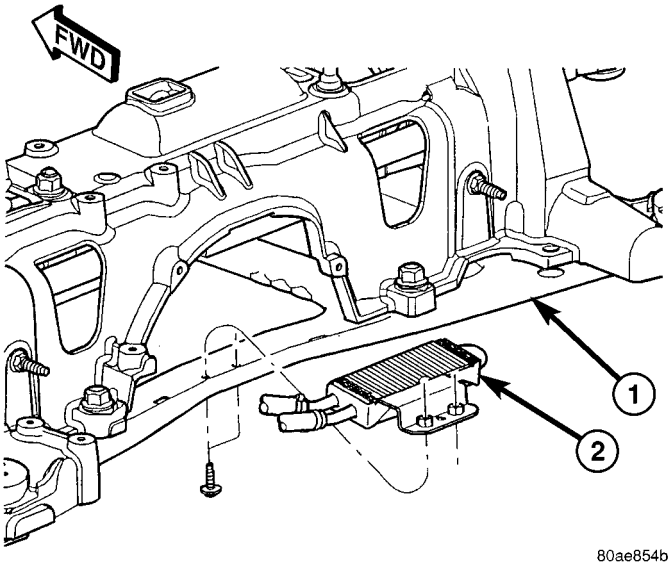

Fig. 31 Power Steering Cooler

1 - CRADLE CROSSMEMBER REINFORCEMENT
2 - POWER STEERING COOLER

(3) Remove the lower control arm rear bushing retainer bolts located on each side of each lower control arm rear bushing.

NOTE: The bolts fastening the cradle crossmember reinforcement are of two different thread sizes. Note the location of the various sizes.

(4) Remove the bolts attaching the cradle crossmember reinforcement to the front suspension cradle crossmember (Fig. 32). Remove the 2 bolts fastening the reinforcement and rear of cradle crossmember to the body of the vehicle. Remove the reinforcement.

CAUTION: When removing the nut from the stud of the stabilizer bar link, do not allow the stud to rotate in it's socket. Hold the stud from rotating by placing an open-end wrench on the flat machined into the stud (Fig. 33).

(5) Remove the stabilizer bar links from each end of the stabilizer bar (Fig. 33). To do so, place an open-end wrench on the flat machined into the link's mounting stud, then remove the nut while holding the wrench in place. Push each stud out of the hole in the stabilizer bar.

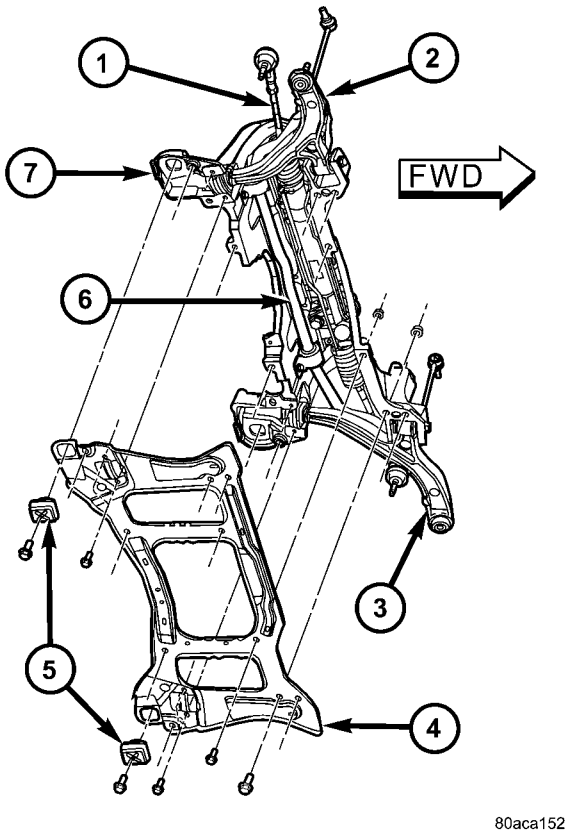

Fig. 32 Cradle Crossmember Reinforcement Attachment

1 - STEERING GEAR
2 - RIGHT LOWER CONTROL ARM
3 - LEFT LOWER CONTROL ARM
4 - CRADLE CROSSMEMBER REINFORCEMENT
5 - REAR CRADLE CROSSMEMBER ISOLATOR BUSHING
6 - STABILIZER BAR
7 - CRADLE CROSSMEMBER

(6) Remove the stabilizer bar bushing (cushion) retainers from the front suspension cradle crossmember (Fig. 34).

(7) Remove the stabilizer bar and bushings (cushions) as an assembly from the front suspension cradle crossmember.

INSPECTION

Inspect for broken or distorted stabilizer bar bushings (cushions), bushing retainers, and worn or damaged stabilizer bar links.

INSTALLATION

NOTE: Two different diameter stabilizer bars are available for this vehicle. Therefore, two different size bushings/cushions are also used. Use the correct bushing/cushion on the correct stabilizer bar.

STABILIZER BAR (Continued)

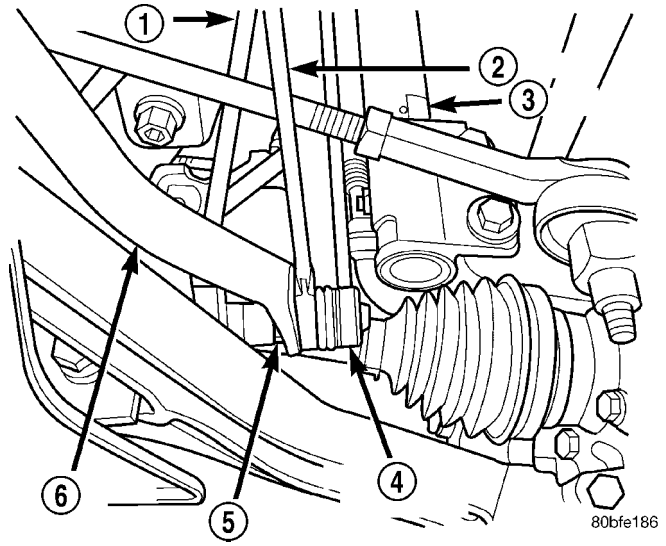

Fig. 33 Stabilizer Bar Link To Stabilizer Bar Attachment

1 - RATCHET
2 - WRENCH
3 - STRUT
4 - STABILIZER BAR LINK
5 - NUT
6 - STABILIZER BAR

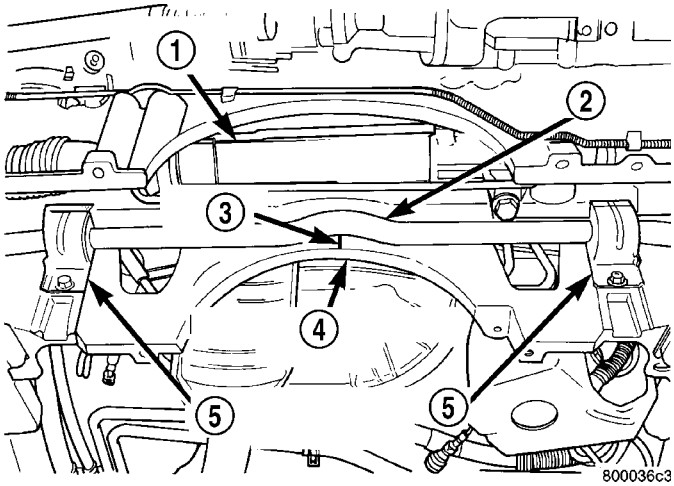

Fig. 34 Front Stabilizer Bar Retainers

1 - STEERING GEAR
2 - STABILIZER BAR
3 - RAISED BEAD
4 - FRONT CRADLE CROSSMEMBER
5 - RETAINERS

(1) If the stabilizer bar to front suspension cradle bushings require replacement at time of inspection, install new bushings before installing stabilizer bar. Bushings are replaced by opening slit on bushings and peeling them off stabilizer bar. Install new bushings on stabilizer bar by spreading bushing at slit and forcing them on the stabilizer bar. **Bushings must be installed on stabilizer bar so slit in bushing will be facing toward the rear of vehicle with the square corner toward the ground, when the stabilizer bar is installed on the vehicle (Fig. 35).**

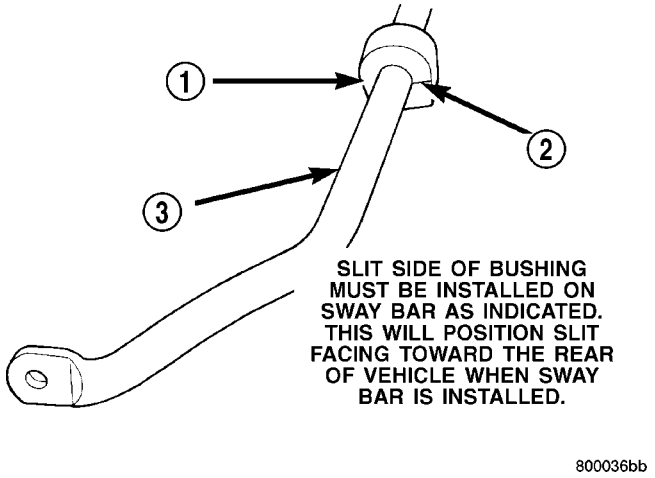

Fig. 35 Correctly Installed Stabilizer Bar To Cradle Bushing

1 - SWAY BAR ISOLATOR BUSHING
2 - SLIT IN SWAY BAR BUSHING
3 - SWAY BAR

(2) Position stabilizer bar into front suspension cradle so stabilizer bar bushings are aligned with depressions in cradle. Install stabilizer bar bushing retainers onto crossmember aligning raised bead on retainer with cutouts in bushings (Fig. 36). **Do not tighten Stabilizer bar bushing retainers bolts at this time.**

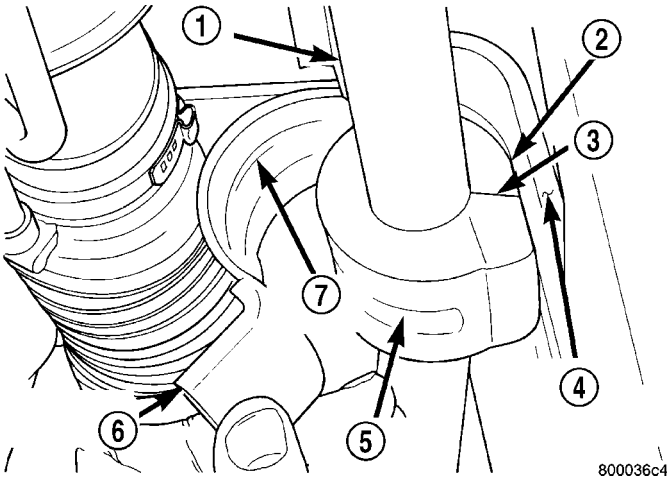

Fig. 36 Stabilizer Bar Bushing Retainer Installation

1 - SWAY BAR
2 - SWAY BAR BUSHING
3 - BUSHING SPLIT
4 - FRONT SUSPENSION CRADLE
5 - BUSHING CUT-OUT
6 - BUSHING RETAINER
7 - RAISED BEAD

STABILIZER BAR (Continued)

(3) Check position of the stabilizer bar in the front suspension cradle. The center of the curved section of the stabilizer bar must be aligned with the raised line in the center of the front suspension cradle (Fig. 37).

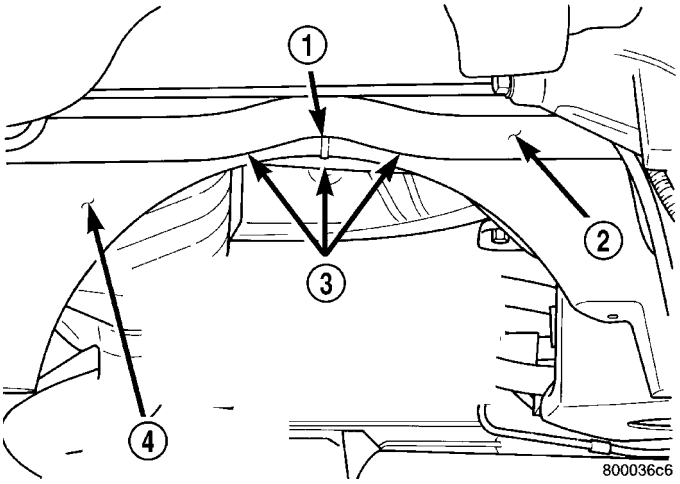

Fig. 37 Stabilizer Bar Correctly Positioned In Cradle

1 - RAISED BEAD
2 - SWAY BAR
3 - WHEN INSTALLING SWAY BAR THE RAISED BEAD ON THE SUSPENSION CRADLE MUST BE IN THE CENTER OF RADIUS IN SWAY BAR
4 - FRONT SUSPENSION CRADLE

(4) Install the stabilizer bar link mounting stud through the hole in each end of the stabilizer bar (Fig. 33).

CAUTION: When installing the nut on the mounting stud of the stabilizer bar link, do not allow the stud to rotate in it's socket. Hold the stud from rotating by placing an open-end wrench on the flat machined into the stud (Fig. 33).

(5) Hand-thread the nut on the end of each stabilizer bar link stud. Hold the studs from turning by placing an open-end wrench on the flat machined into the link's mounting stud, then tighten each nut while holding the wrench in place (Fig. 33). Tighten each nut to a torque of 88 N·m (65 ft. lbs.).

(6) Tighten the stabilizer bar bushing retainer to cradle attaching bolts (Fig. 34) to 68 N·m (50 ft. lbs.) torque.

(7) Install the reinforcement on the front suspension cradle crossmember and install the bolts attaching the reinforcement to the cradle crossmember (Fig. 32). Tighten the M-14 size bolts to a torque of 153 N·m (113 ft. lbs.). Tighten the M-12 size bolts to a torque of 106 N·m (78 ft. lbs.).

(8) Install the lower control arm rear bushing retainer bolts through reinforcement on each side of each lower control arm rear bushing. Tighten these M-10 size bolts to a torque of 61 N·m (45 ft. lbs.).

(9) Install the two bolts and bushings attaching the reinforcement and rear of cradle crossmember to body of vehicle (Fig. 32). Tighten bolts to a torque of 163 N·m (120 ft. lbs.).

(10) Install the power steering cooler (Fig. 31). Tighten bolts to a torque of 11 N·m (100 in. lbs.).

(11) Lower the vehicle.

STRUT

DESCRIPTION - STRUT ASSEMBLY

A Macpherson type strut assembly is used in place of a conventional front suspension's upper control arm and upper ball joint. The bottom of the strut mounts directly to the steering knuckle using two bolts and nuts going through the strut clevis bracket and steering knuckle. The top of the strut mounts directly to the strut tower of the vehicle using the threaded studs on the strut assemblies upper mount.

The strut assembly includes the components listed in the figure (Fig. 38).

Each component is serviced by removing the strut assembly from the vehicle and disassembling it.

The coil springs are side-oriented. Springs on the left side of the vehicle have a left-hand wind top-to-bottom while springs on the right side have a right-hand wind top-to-bottom. This helps provide better vehicle stability during jounce and rebound maneuvers of the front suspension. Left and right springs must not be interchanged. Coil springs are rated separately for each corner or side of the vehicle depending on optional equipment and type of vehicle service. If the coil springs require replacement, be sure that the springs are replaced with springs meeting the correct load rating and spring rate for the vehicle and its specific options.

OPERATION - STRUT ASSEMBLY

The strut assembly cushions the ride of the vehicle, controlling vibration, along with jounce and rebound of the suspension.

The coil spring controls ride quality and maintains proper ride height.

The spring isolators isolate the coil spring at the top and bottom from coming into metal-to-metal contact with the upper seat and strut.

The jounce bumper limits suspension travel and metal-to-metal contact under full jounce condition.

The strut dampens jounce and rebound motions of the coil spring and suspension.

During steering maneuvers, the strut assembly (through a pivot bearing in the upper strut mount) and steering knuckle (through the lower ball joint) turn as an assembly.

STRUT (Continued)

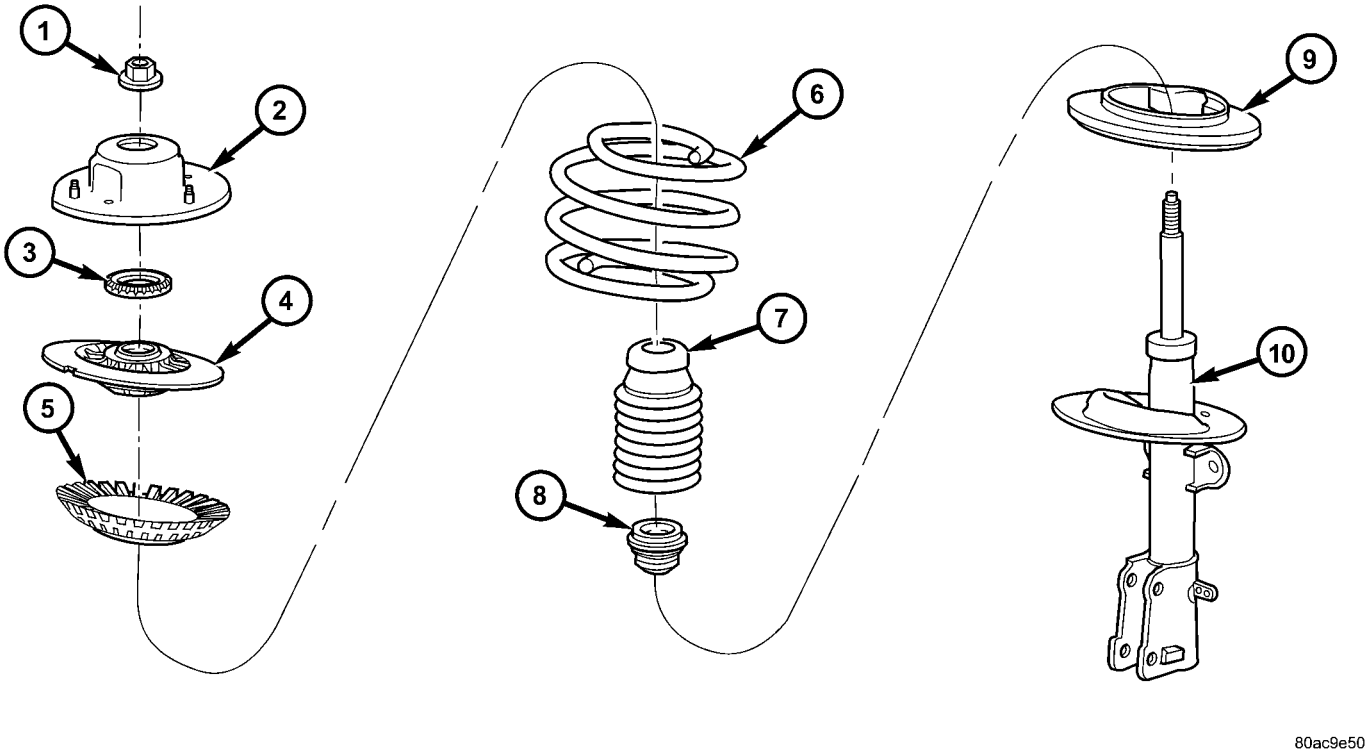

Fig. 38 STRUT ASSEMBLY

1 - NUT
2 - UPPER MOUNT
3 - PIVOT BEARING
4 - UPPER SPRING SEAT
5 - UPPER SPRING ISOLATOR
6 - COIL SPRING
7 - DUST SHIELD
8 - JOUNCE BUMPER
9 - LOWER SPRING ISOLATOR
10 - STRUT (DAMPER)

DIAGNOSIS AND TESTING - STRUT ASSEMBLY

(1) Inspect for damaged or broken coil springs (Fig. 38).

(2) Inspect for torn or damaged strut assembly dust boots (Fig. 38).

(3) Inspect the coil spring isolator on the lower spring seat for any signs of damage or deterioration.

(4) Lift dust boot (Fig. 39) and inspect strut assembly for evidence of fluid running from the upper end of fluid reservoir. (Actual leakage will be a stream of fluid running down the side and dripping off lower end of unit). A slight amount of seepage between the strut rod and strut shaft seal is not unusual and does not affect performance of the strut assembly (Fig. 39). Also inspect jounce bumpers for signs of damage or deterioration.

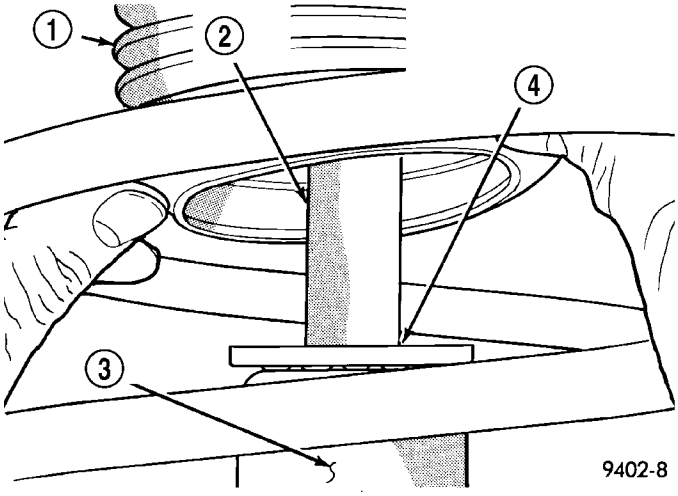

Fig. 39 Strut Assembly Leakage Inspection (Typical)

1 - DUST BOOT
2 - STRUT SHAFT
3 - STRUT FLUID RESERVOIR
4 - INSPECT THIS AREA FOR EVIDENCE OF EXCESSIVE FLUID LEAKAGE

REMOVAL - STRUT ASSEMBLY

WARNING: DO NOT REMOVE THE NUT FROM THE STRUT ROD WHILE STRUT ASSEMBLY IS INSTALLED IN VEHICLE, OR BEFORE STRUT ASSEMBLY SPRING IS COMPRESSED.

(1) Raise the vehicle. See Hoisting in Lubrication and Maintenance.

STRUT (Continued)

(2) Remove the wheel and tire assembly from location on front of vehicle requiring strut removal.

(3) If both strut assemblies are to be removed, mark the strut assemblies right or left according to which side of the vehicle they were removed from.

(4) Remove the hydraulic brake hose routing bracket and the speed sensor cable routing bracket from the strut damper brackets (Fig. 40).

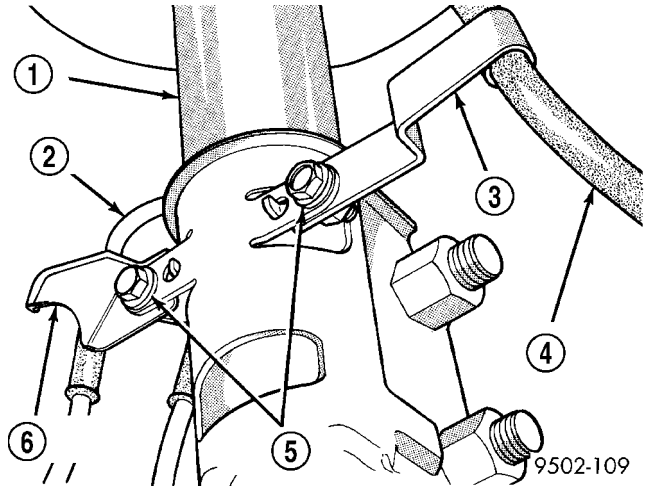

Fig. 40 Brake Hose And Speed Sensor Cable Routing

1 - STRUT DAMPER
2 - WHEEL SPEED SENSOR CABLE
3 - ROUTING BRACKET
4 - HYDRAULIC BRAKE HOSE
5 - ATTACHING BOLT
6 - ROUTING BRACKET

CAUTION: When removing the nut from the stud of the stabilizer bar link, do not allow the stud to rotate in it's socket. Hold the stud from rotating by placing an open-end wrench on the flat machined into the stud (Fig. 41).

(5) Remove the stabilizer bar link from the bracket on the strut assembly (Fig. 41). To do so, place an open-end wrench on the flat machined into the link's mounting stud, then remove the nut while holding the wrench in place. Push the stud out of the bracket.

CAUTION: The steering knuckle to strut assembly attaching bolts are serrated and must not be turned during removal. Remove nuts while holding bolts stationary in the steering knuckles.

(6) Remove the 2 strut assembly clevis bracket to steering knuckle attaching bolts (Fig. 42).

(7) Remove the 3 nuts attaching the strut assembly upper mount to the strut tower (Fig. 43) and remove the strut assembly from the vehicle.

(8) To disassemble the strut assembly, (Refer to 2 - SUSPENSION/FRONT/STRUT - DISASSEMBLY).

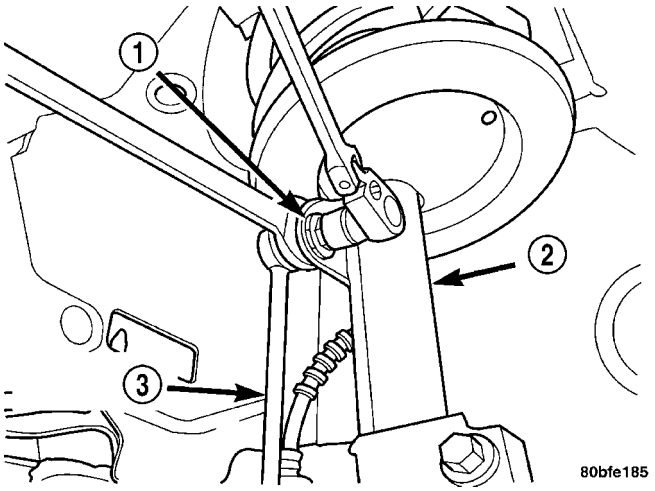

Fig. 41 Stabilizer Bar Link To Strut Attachment

1 - NUT
2 - STRUT
3 - STABILIZER BAR LINK

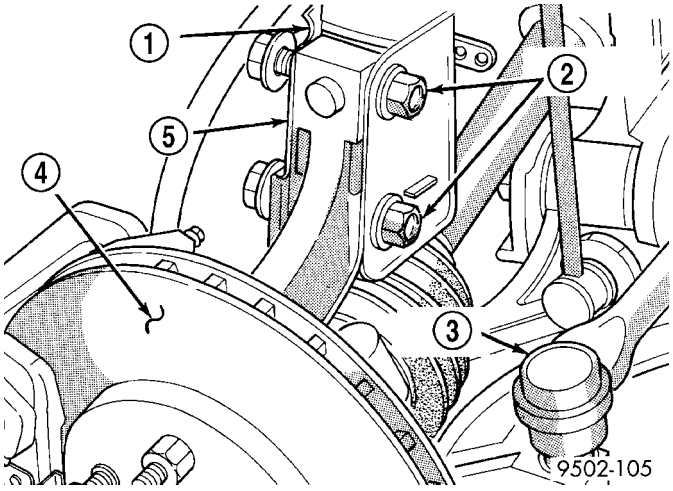

Fig. 42 Strut Damper Attachment To Steering Knuckle

1 - STRUT CLEVIS BRACKET
2 - ATTACHING BOLTS
3 - TIE ROD END
4 - ROTOR
5 - STEERING KNUCKLE

DISASSEMBLY - STRUT ASSEMBLY

The strut assembly must be removed from the vehicle for it to be disassembled and assembled.

For the disassembly and assembly of the strut assembly, use of Strut Spring Compressor, Pentastar Service Equipment (PSE) tool W-7200, or the equivalent, is recommended to compress the coil spring. Follow the manufacturer's instructions closely.

STRUT (Continued)

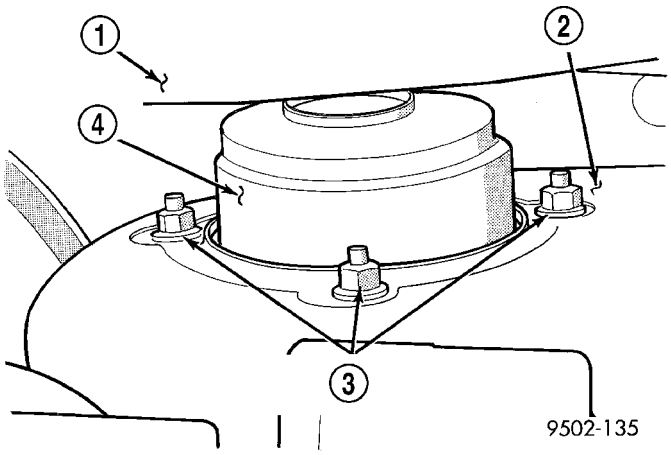

Fig. 43 Strut Assembly To Strut Tower Attaching Nuts (Typical)

1 - WINDSHIELD WIPER MODULE
2 - STRUT TOWER
3 - STRUT MOUNT ATTACHING BOLTS
4 - UPPER STRUT MOUNT

WARNING: DO NOT REMOVE THE STRUT SHAFT NUT BEFORE THE COIL SPRING IS COMPRESSED. THE COIL SPRING IS HELD UNDER PRESSURE AND MUST BE COMPRESSED, REMOVING SPRING TENSION FROM THE UPPER MOUNT AND PIVOT BEARING, BEFORE THE SHAFT NUT IS REMOVED.

(1) Position the strut assembly in the strut coil spring compressor following the manufacturers instructions. Position the lower hooks on the coil spring first. The strut clevis bracket should be positioned straight outward from the compressor.

(2) Turn the upper mount of the strut assembly toward the inside of the compressor as shown to allow positioning of the compressor upper hooks (Fig. 44). Position the upper hooks on top of the coil spring upper seat approximately 1 inch from outside diameter of seat (Fig. 47). **Do not allow hooks to be placed closer to edge.** Place a clamp on the lower end of the coil spring, so the strut is held in place once the strut shaft nut is removed.

(3) Compress the coil spring until all coil spring tension is removed from the upper mount.

(4) Install Strut Nut Socket, Special Tool 6864, on the strut shaft retaining nut (Fig. 45). Next, install a 10 mm socket on the hex on the end of the strut shaft. While holding the strut shaft from turning, remove the nut from the strut shaft.

(5) Remove the upper mount from the strut shaft.

(6) If the pivot bearing needs to be serviced, remove it from the top of the coil spring upper seat by pulling it straight up.

(7) Remove the clamp from the bottom of the coil spring and remove the strut out through the bottom of the coil spring.

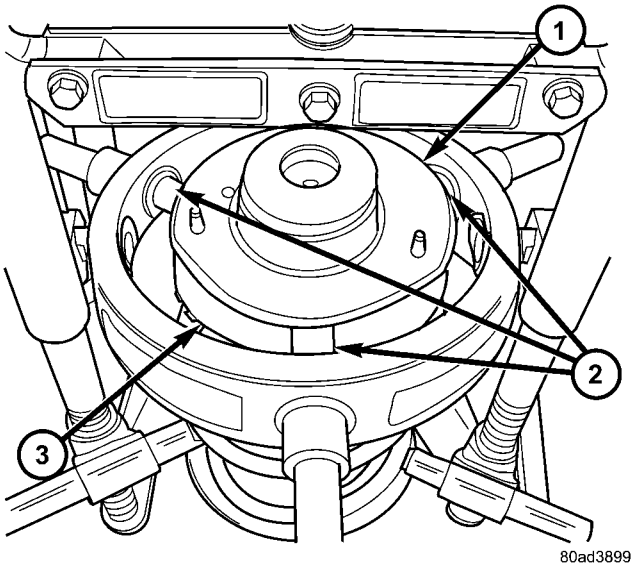

Fig. 44 Mount Rotated And Hooks Positioned

1 - UPPER MOUNT TURNED TOWARD COMPRESSOR
2 - COMPRESSOR UPPER HOOKS
3 - UPPER SPRING SEAT

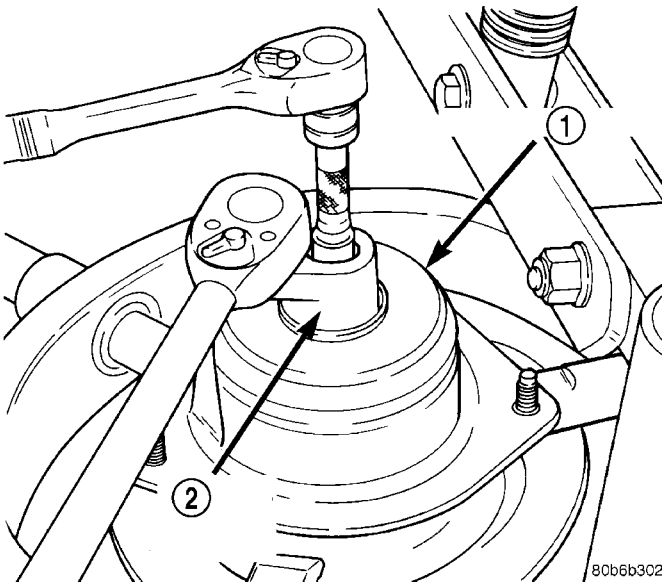

Fig. 45 Retaining Nut Removal/Installation (Typical)

1 - UPPER MOUNT
2 - SPECIAL TOOL 6864

NOTE: If the coil spring or upper spring seat needs to be serviced, proceed with the next step, otherwise, proceed with step 10.

(8) Release the tension from the coil spring by backing off the compressor drive fully. Push back the compressor upper hooks and remove the upper spring seat with upper spring isolator.

(9) Remove the coil spring from the spring compressor.

STRUT (Continued)

(10) Remove the dust shield and jounce bumper as an assembly from the strut shaft by pulling both straight up and off the strut shaft. The dust shield cannot be separated from the jounce bumper until after it is removed from strut shaft.

(11) Remove the jounce bumper from the dust shield. The jounce bumper is removed from the dust shield by collapsing the dust shield until the jounce bumper can be pulled free from the dust boot.

(12) Remove the spring isolator from the lower spring seat on the strut (Fig. 38).

(13) Inspect the strut assembly components (Fig. 38) for the following and replace as necessary:

- Inspect the strut for any condition of shaft binding over the full stroke of the shaft.
- Check the upper mount for cracks and distortion and its retaining studs for any sign of damage.
- Check the upper seat for stress cracks and wear.
- Check the upper spring isolator for severe deterioration.
- Check for binding of the strut assembly pivot bearing.
- Inspect the dust shield for rips and deterioration.
- Inspect the jounce bumper for cracks and signs of deterioration.

ASSEMBLY - STRUT ASSEMBLY

For the disassembly and assembly of the strut assembly, use of Strut Spring Compressor, Pentastar Service Equipment (PSE) tool W-7200, or the equivalent, is recommended to compress the coil spring. Follow the manufacturer's instructions closely.

NOTE: Coil Springs on this vehicle are side-oriented. Springs on the left side of the vehicle have a left-hand wind top-to-bottom while springs on the right side have a right-hand wind top-to-bottom. Left and right springs must not be interchanged.

NOTE: If the coil spring has been removed from the spring compressor, proceed with the next step, otherwise, proceed with step 5.

(1) Place the coil spring in the compressor lower hooks following the manufacturers instructions. Proper orientation of the spring to the strut (once installed) is necessary. Consider the following when placing the coil spring in the compressor: From above, the compressor back is at the 12 o'clock position, and you, standing in the front of the compressor, are at the 6 o'clock position. Place the lower coil spring end at the 12 o'clock position for left springs and at the 6 o'clock position for right springs. (Fig. 46).

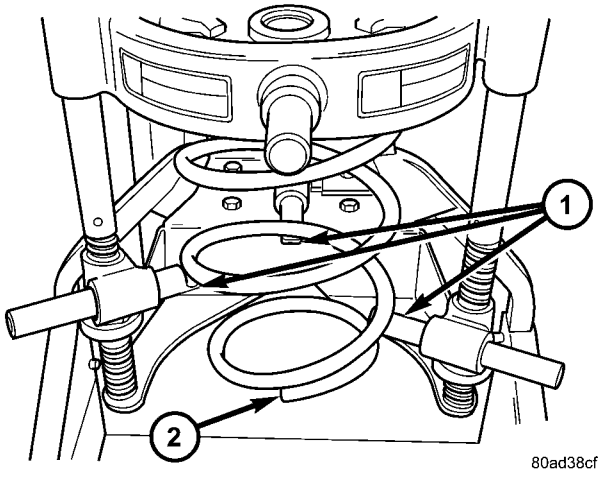

Fig. 46 Spring Positioned In Compressor (Right Spring Shown)

1 - COMPRESSOR LOWER HOOKS
2 - COIL SPRING END

(2) Install the upper seat and upper isolator on top of the coil spring. Position the notch in the perimeter of the upper seat toward the front of the compressor (same 6 o'clock position as in step 1).

(3) Position the upper hooks on top of the coil spring upper seat so the upper hooks span approximately 1 inch past outside diameter of upper seat (Fig. 47). This will allow proper clearance for upper mount installation without pinching the hooks in-between the two pieces. **Do not allow hooks to be placed closer to edge.**

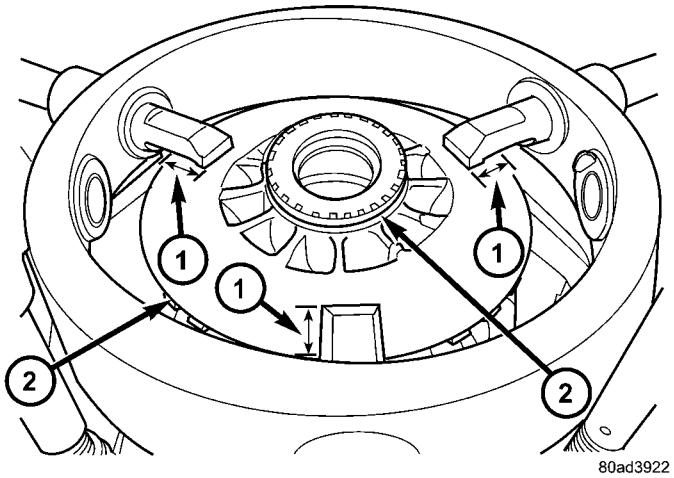

Fig. 47 Hook Placement On Upper Seat

1 - HOOKS POSITIONED 1 INCH FROM EDGE
2 - PIVOT BEARING AND UPPER SEAT

(4) Compress the coil spring far enough to allow strut installation.

(5) If the pivot bearing has been removed from the upper seat, install the pivot bearing on the top of the

STRUT (Continued)

upper spring seat (Fig. 48). The bearing must be installed on upper seat with the smaller diameter side of the pivot bearing toward the spring seat. Be sure the pivot bearing is sitting flat on the spring seat once mounted.

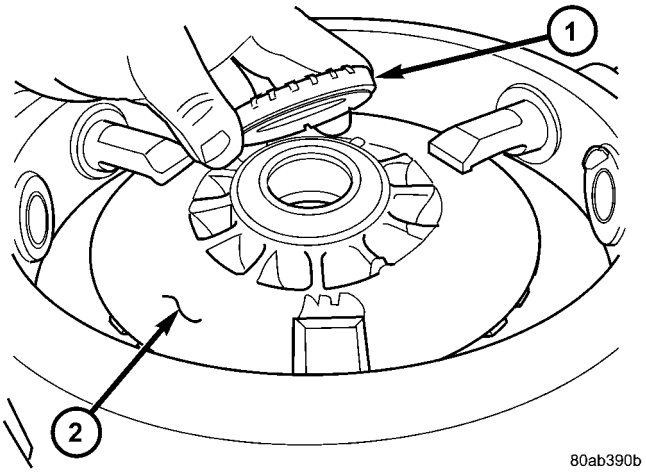

Fig. 48 Pivot Bearing Installation

1 - PIVOT BEARING
2 - UPPER SEAT

(6) Install the spring isolator on the lower spring seat of the strut (Fig. 38).

(7) Install the jounce bumper on the strut shaft (Fig. 38). The jounce bumper is to be installed with the small end pointing downward.

(8) Install the dust shield on the strut. Collapse and stretch the dust shield down over the top of the jounce bumper until the dust shield snaps into the slot on the jounce bumper. The jounce bumper will be at the top of the inner dust boot. Return the dust shield to its fully extended length.

(9) Install the strut through the bottom of the coil spring until the lower spring seat contacts the lower end of the coil spring. The clevis bracket on the strut should point straight outward away from the compressor (to the 6 o'clock position). If necessary, reposition the strut or coil spring in the compressor so the strut clevis bracket lines up with the lower coil spring end as indicated in the figure (Fig. 49). Install the clamp to hold the strut and coil spring together.

(10) Install the strut mount over the strut shaft and onto the top of the pivot bearing and upper seat as shown (Fig. 44). Loosely install the retaining nut on the strut shaft.

(11) Install Strut Nut Socket (on the end of a torque wrench), Special Tool 6864, on the strut shaft retaining nut (Fig. 45). Next, install a 10 mm socket on the hex on the end of the strut shaft. While holding the strut shaft from turning, tighten the strut shaft retaining nut to a torque of 100 N·m (75 ft. lbs.).

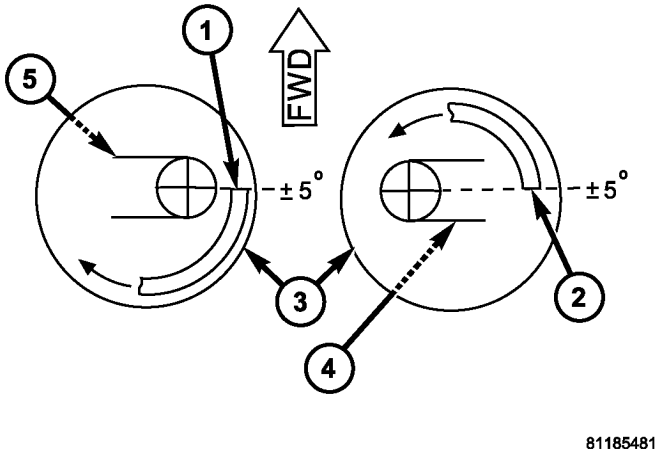

Fig. 49 Coil Spring Positioning

1 - END OF LEFT COIL SPRING AT STRUT LOWER SEAT
2 - END OF RIGHT COIL SPRING AT STRUT LOWER SEAT
3 - LOWER SEATS OF STRUTS
4 - RIGHT STRUT CLEVIS BRACKET
5 - LEFT STRUT CLEVIS BRACKET

NOTE: Before releasing the tension the compressor has on the spring, using the following figure as reference (Fig. 50), make sure the upper spring seat, coil spring and strut clevis bracket are all lined up properly (within 5° of one another).

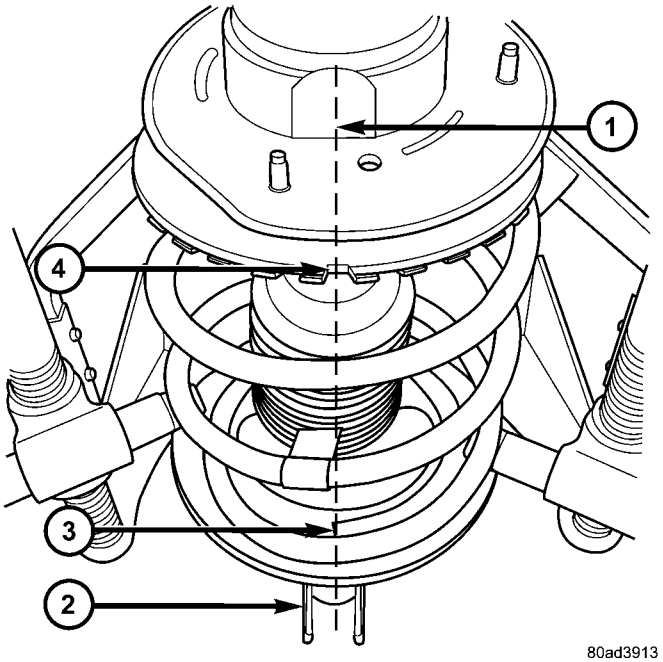

Fig. 50 Components Lined Up

1 - IMAGINARY VERTICAL LINE
2 - CLEVIS BRACKET
3 - END OF COIL SPRING (RIGHT SIDE ONLY)
4 - NOTCH IN UPPER SPRING SEAT

STRUT (Continued)

(12) Slowly release the tension from the coil spring by backing off the compressor drive fully. As the tension is relieved, make sure the upper mount, pivot bearing and upper seat are align properly. Remove the clamp from the lower end of the coil spring and strut. Push back the spring compressor upper and lower hooks, then remove the strut assembly from the spring compressor.

(13) Install strut assembly on the vehicle. (Refer to 2 - SUSPENSION/FRONT/STRUT - INSTALLATION)

INSTALLATION - STRUT ASSEMBLY

CAUTION: Front strut coil springs are side-oriented. When installing a strut assembly, make sure the strut being installed has the correct coil spring for that side of the vehicle. Springs on the left side of the vehicle have a left-hand wind top-to-bottom while springs on the right side have a right-hand wind top-to-bottom (Fig. 49). Do not interchange the two sides.

(1) Install strut assembly into strut tower, aligning and installing the 3 studs on the upper strut mount into the holes in shock tower. Install the 3 upper strut mount attaching nut/washer assemblies (Fig. 43). Then using a crow foot. tighten the 3 attaching nuts to a torque of 28 N·m (250 in. lbs.).

CAUTION: The steering knuckle to strut assembly attaching bolts are serrated and must not be turned during installation. Install nuts while holding bolts stationary in the steering knuckles.

NOTE: The strut clevis-to-steering knuckle bolts are installed differently on each side of the vehicle. Left hand side bolts are to be installed from vehicle rear to front. Right side bolts are to be installed from vehicle front to rear.

(2) Align strut assembly with steering knuckle. Position arm of steering knuckle into strut assembly clevis bracket. Align the strut assembly clevis bracket mounting holes with the steering knuckle mounting holes. Install the 2 strut assembly to steering knuckle attaching bolts (Fig. 42). **If strut assembly is attached to steering knuckle using a cam bolt, the cam bolt must be installed in the lower slotted hole on strut clevis bracket.** Tighten the strut clevis-to-steering knuckle attaching bolts to a torque of 81 N·m (60 ft. lbs.) plus an additional 1/4 (90°) turn after specified torque is met.

(3) Install the stabilizer bar link mounting stud through the bracket on the strut assembly (Fig. 41).

CAUTION: When installing the nut on the mounting stud of the stabilizer bar link, do not allow the stud to rotate in it's socket. Hold the stud from rotating by placing an open-end wrench on the flat machined into the stud (Fig. 41).

(4) Hand thread the nut on the end of the stabilizer bar link stud. Hold the stud from turning by placing an open-end wrench on the flat machined into the link's mounting stud, then tighten the nut while holding the wrench in place (Fig. 41). Tighten the nut to a torque of 88 N·m (65 ft. lbs.).

(5) Install the hydraulic brake hose and speed sensor cable routing brackets on the strut assembly brackets (Fig. 40). Tighten the routing bracket attaching bolts to a torque of 13 N·m (10 ft. lbs.).

(6) Install the wheel/tire assembly on the vehicle.

(7) Install and tighten the wheel mounting stud nuts in proper sequence until all nuts are torqued to half specification. Then repeat the tightening sequence to the full specified torque of 135 N·m (100 ft. lbs.).

REAR SUSPENSION

TABLE OF CONTENTS

page

REAR SUSPENSION
DESCRIPTION - REAR SUSPENSION 26
SPECIFICATIONS
REAR SUSPENSION FASTENER TORQUE . . 28
SPECIAL TOOLS
REAR SUSPENSION 28
BUSHING - LEAF SPRING FRONT
REMOVAL 29
INSTALLATION 30
HUB / BEARING
DESCRIPTION 30
OPERATION 30
DIAGNOSIS AND TESTING - HUB AND BEARING 31
REMOVAL 31
INSTALLATION 33
JOUNCE BUMPER
DESCRIPTION 35
OPERATION 35
REMOVAL
REMOVAL - AWD, HEAVY DUTY, CARGO . . . 36
REMOVAL - FRONT-WHEEL-DRIVE 36
INSTALLATION
INSTALLATION - AWD, HEAVY DUTY, CARGO 36
INSTALLATION - FRONT-WHEEL-DRIVE 36
SHOCK ABSORBER
DESCRIPTION 36
OPERATION 36
REMOVAL - SHOCK ABSORBER 36
DISASSEMBLY - SHOCK ABSORBER (UPPER BUSHING) 37
ASSEMBLY - SHOCK ABSORBER (UPPER BUSHING) 37
INSTALLATION - SHOCK ABSORBER 38
SPRING - AWD
REMOVAL 38

page

INSTALLATION 39
SPRING - CARGO
REMOVAL 40
INSTALLATION 40
SPRING - FWD
REMOVAL 40
INSTALLATION 42
SPRING MOUNTS - FRONT
REMOVAL 42
INSTALLATION 43
SPRING MOUNTS - REAR
REMOVAL 43
INSTALLATION 43
SPRING SHACKLE
REMOVAL 44
INSTALLATION 44
STABILIZER BAR
DESCRIPTION 44
OPERATION 44
REMOVAL
REMOVAL - AWD 44
REMOVAL - FWD 45
REMOVAL - FWD - FOLD-IN-FLOOR SEATING 45
INSTALLATION
INSTALLATION - AWD 45
INSTALLATION - FWD 45
INSTALLATION - FWD - FOLD-IN-FLOOR SEATING 45
TRACK BAR
DESCRIPTION 45
OPERATION 46
REMOVAL 46
INSTALLATION 46

REAR SUSPENSION

DESCRIPTION - REAR SUSPENSION

The rear suspension design on this vehicle uses leaf springs, and a tube and casting axle (Fig. 1) (Fig. 2). The leaf springs used on the rear suspension of this vehicle are of either a mono-leaf or multi-leaf design.

There are four different rear suspension designs available:

- Front-Wheel-Drive
- Front-Wheel-Drive with Fold-in-Floor Seating
- All-Wheel-Drive
- Front-Wheel-Drive Commercial

The Front-Wheel-Drive (FWD) rear suspension uses an axle that is mounted to mono-leaf springs using isolator bushings at the axle mounting brackets. The stabilizer bar mounts behind the axle.

REAR SUSPENSION (Continued)

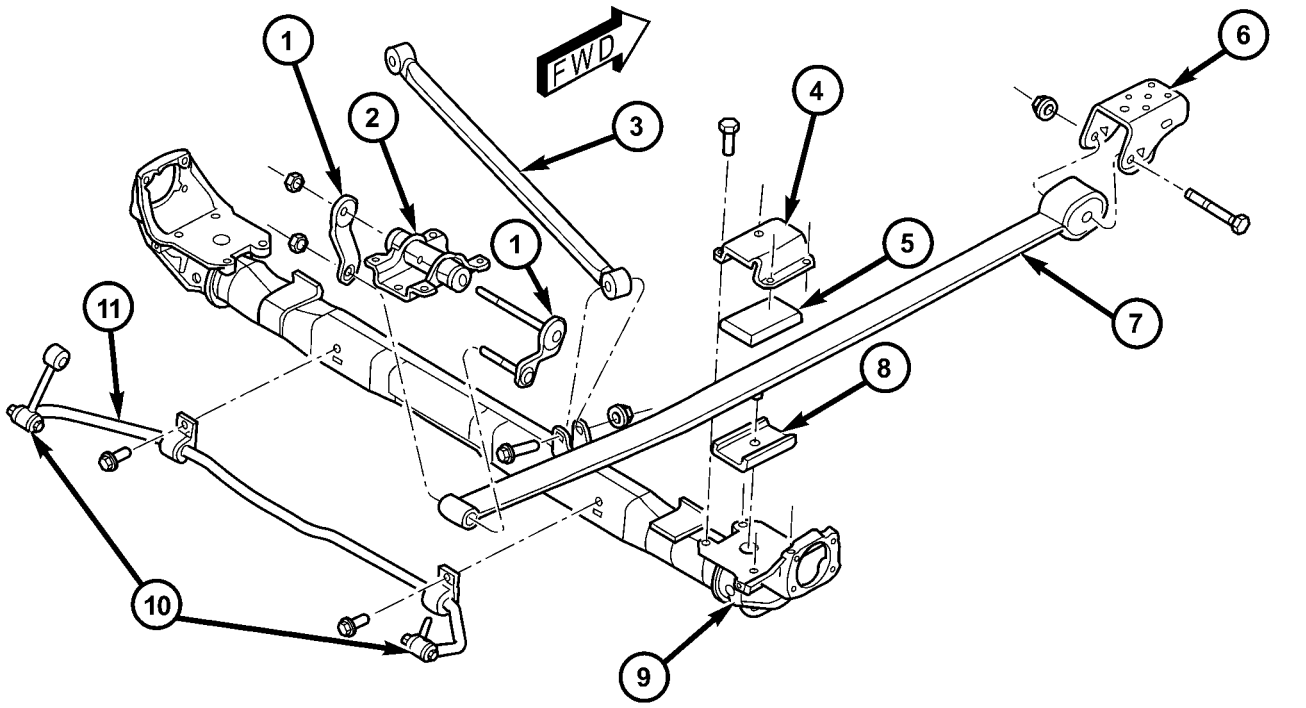

Fig. 1 Front-Wheel-Drive Rear Suspension

1 - SHACKLE
2 - REAR MOUNT (HANGER)
3 - TRACK BAR
4 - SPRING PLATE
5 - ISOLATOR
6 - FRONT MOUNT (HANGER)
7 - LEAF SPRING (MONO-LEAF)
8 - ISOLATOR
9 - FWD REAR AXLE
10 - STABILIZER BAR LINKS
11 - STABILIZER BAR

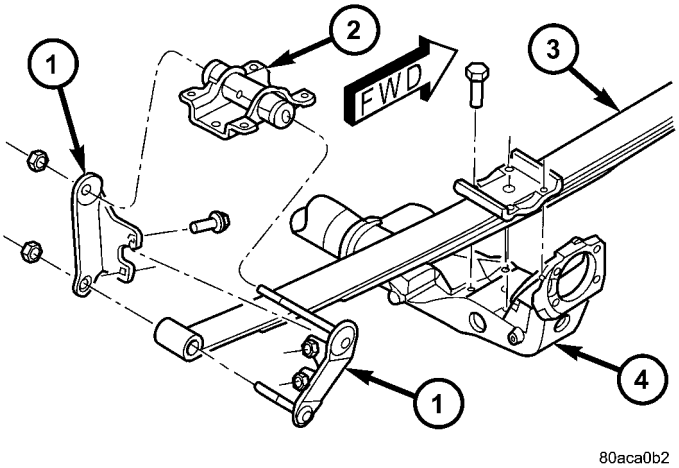

Fig. 2 All-Wheel-Drive Rear Suspension

1 - SHACKLE
2 - REAR MOUNT (HANGER)
3 - LEAF SPRING (MULTI-LEAF)
4 - AWD REAR AXLE

The Front-Wheel-Drive with Fold-in-Floor Seating rear suspension is very much like the FWD rear suspension except for the fact that the stabilizer bar mounts in from of the axle.

The All-Wheel-Drive (AWD) rear suspension uses a unique axle that is mounted to multi-leaf springs, and does not use isolator bushings between the rear axle and the leaf springs.

The Front-Wheel-Drive Cargo rear suspension uses multi-leaf springs and a different rear axle than either the standard FWD or AWD. It also does not utilize a stabilizer bar. It is very similarly to the AWD suspension.

The rear suspension consists of these major components:

- Leaf springs (One each side)
- Jounce bumpers (One each side)
- Shock absorbers (One each side)
- Hub and bearings (One each side)
- Track bar
- Stabilizer bar

REAR SUSPENSION (Continued)

SPECIFICATIONS

REAR SUSPENSION FASTENER TORQUE

DESCRIPTION	N·m	Ft. Lbs.	In. Lbs.
Hub And Bearing Mounting Bolts	129	95	—
Hub And Bearing Axle Hub Nut	244	180	—
Jounce Bumper Mounting Bolt	33	24	290
Leaf Spring Front Mount-To-Body Bolts	61	45	—
Leaf Spring Front Pivot Bolt	156	115	—
Leaf Spring Plate-To-Axle Bolts	95	70	—
Leaf Spring Rear Mount-To-Body Bolts	61	45	—
Leaf Spring Shackle Plate Nuts	61	45	—
Shock Absorber Mounting Bolts	88	65	—
Stabilizer Bar Bushing Retainer Bolts	61	45	—
Stabilizer Bar Link Nuts	61	45	—
Stabilizer Bar Link Frame Bracket Mounting Bolts	61	45	—
Track Bar Bracket-To-Body Mount Bolts	61	45	—
Track Bar Pivot Bolts	95	70	—
Wheel Mounting (Lug) Nut	135	100	—

SPECIAL TOOLS

REAR SUSPENSION

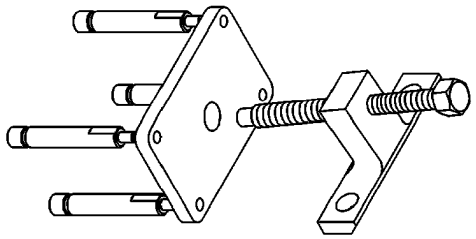

Remover, Hub/Bearing 8458

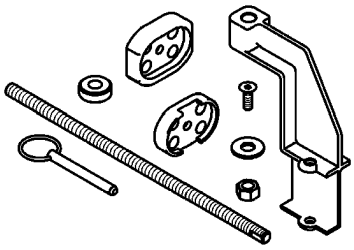

Remover/Installer, Bushing 8459

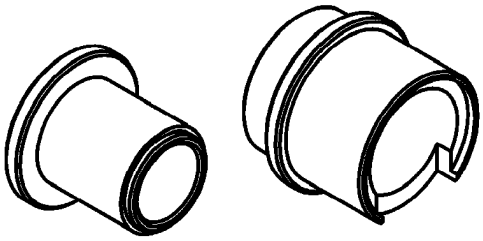

Remover/Installer, Bushing 8526

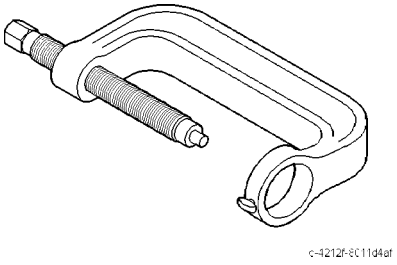

Press, Ball Joint C-4212F

BUSHING - LEAF SPRING FRONT

REMOVAL

(1) Raise vehicle on frame-contact hoist as follows:

(a) Position the hoist arm supporting the corner of the vehicle to be serviced against a block of wood placed on the body sill as shown (Fig. 3).

(b) Position the remaining hoist arms at each corner of the vehicle in the normal fashion. (Refer to LUBRICATION & MAINTENANCE/HOISTING - STANDARD PROCEDURE)

(c) Raise the vehicle to a comfortable working level.

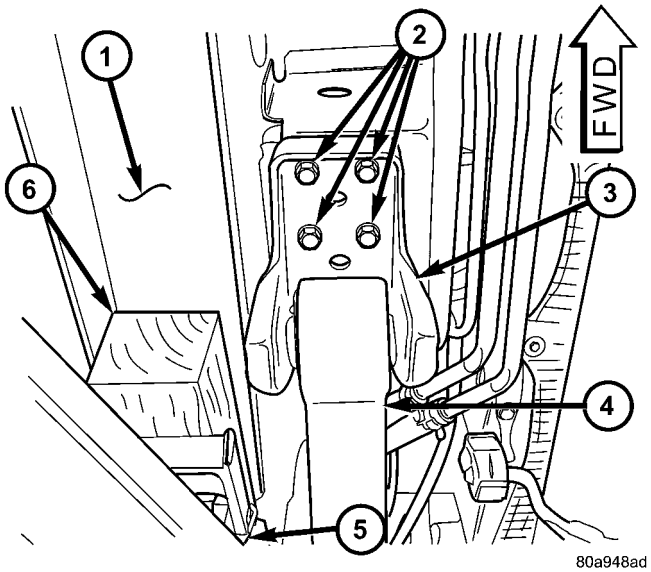

80a948ad

Fig. 3 Lifting Point And Spring Mount

1 - BODY SILL AREA
2 - MOUNTING BOLTS
3 - SPRING MOUNTING BRACKET
4 - LEAF SPRING
5 - HOIST LIFT ARM
6 - WOODEN BLOCK

(2) Position an under-hoist utility jack or transmission jack under rear axle toward the side needing bushing replacement. Jack pad should just contact axle.

(3) Remove shock absorber lower mounting bolt.

NOTE: If shock absorber bolt deflects upward during removal, raise axle by adjusting support jack. If shock absorber bolt deflects downward during removal, lower axle by adjusting support jack (or by pulling on axle).

(4) Remove four bolts securing leaf spring front mounting bracket to the body (Fig. 3).

(5) Using jack, **slowly** lower rear axle, permitting the forward end of rear spring to hang down. Lower it enough to allow access to spring pivot bolt. It may be necessary to place a wooden block between the spring and vehicle to hold forward end of the spring in place.

(6) Remove leaf spring forward pivot bolt, then remove mounting bracket.

(7) Straighten the retainer tabs on the bushing (Fig. 4).

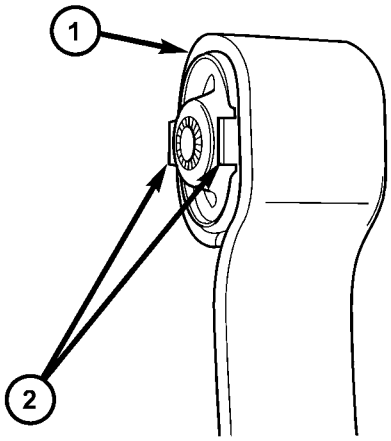

80a94ab0

Fig. 4 Straightened Retaining Tabs

1 - SPRING EYE
2 - RETAINING TABS

(8) Place Remover/Installer, Special Tool 8459 on leaf spring and bushing as shown (Fig. 5) and tighten Set Screw securing Remover Plate to tool threaded shaft.

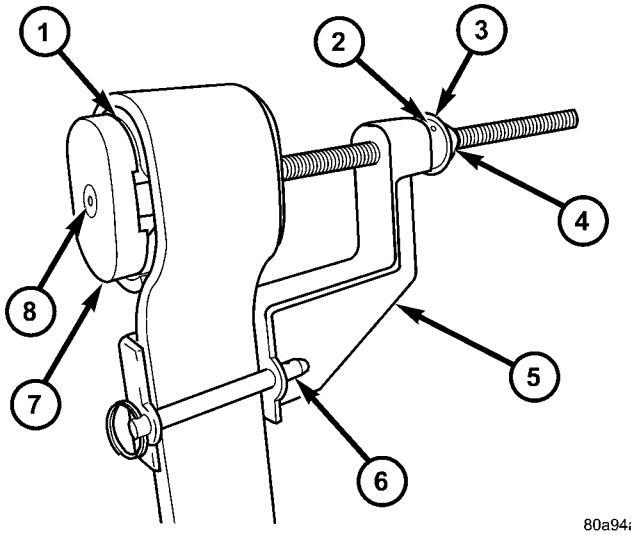

80a94a38

Fig. 5 Tool 8459 Mounted For Bushing Removal

1 - BUSHING
2 - BEARING
3 - WASHER
4 - NUT
5 - BODY (8459-1)
6 - PIN
7 - REMOVER PLATE (8459-2)
8 - SET SCREW

BUSHING - LEAF SPRING FRONT (Continued)

(9) Tighten nut (Fig. 5), removing bushing from spring eye.

(10) Remove the tool from spring, then remove bushing from tool.

INSTALLATION

(1) Install by hand NEW bushing in left side of leaf spring eye.

(2) Place Remover/Installer, Special Tool 8459 on leaf spring and bushing as shown (Fig. 6) and tighten Set Screw securing Installer Plate (8459–3) to tool threaded shaft.

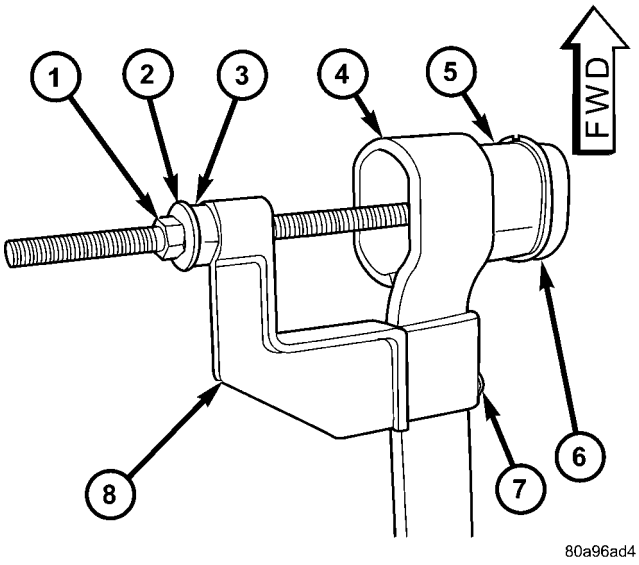

Fig. 6 Tool 8459 Mounted For Bushing Installation

1 - NUT
2 - WASHER
3 - BEARING
4 - LEAF SPRING EYE
5 - BUSHING
6 - INSTALLER PLATE (8459-3)
7 - PIN
8 - BODY (8459-1)

(3) Tighten nut (Fig. 6), installing bushing in spring eye. Tighten nut until there is approximately a 1 mm gap between the bushing flange and the spring eye. **Do not bottom the flange against the spring eye.**

(4) Remove Remover/Installer from the bushing and leaf spring.

(5) Bend the retainer tabs on bushing outward against spring eye.

(6) Position spring mounting bracket over spring eye and install pivot bolt through center of bushing from the **outboard** side.

NOTE: The pivot bolt must be installed from the outboard side to allow proper bracket to body mounting.

(7) Install the nut on the pivot bolt and lightly tighten. Do not fully tighten bolt at this time.

(8) Raise the under-hoist utility jack or transmission jack, guiding the forward mounting bracket into place against the body. It may help to use a drift punch placed through the hole centered between the mounting bolt holes in the bracket and the pilot hole in the body of the vehicle as a guide. When the four mounting bolt holes line up with their threads in the body, Install the mounting bolts (Fig. 3). Tighten the four mounting bolts to 61 N·m (45 ft. lbs.) torque.

(9) Raise or lower the jack until shock absorber lower eye aligns with threads in axle housing. Install shock absorber lower mounting bolt. Do not fully tighten bolt at this time.

(10) Lower the vehicle and remove hoist arms and block of wood from under vehicle.

(11) Tighten the spring front pivot bolt to 156 N·m (115 ft. lbs.) torque.

(12) Tighten the lower shock absorber mounting bolt to 88 N·m (65 ft. lbs.) torque.

HUB / BEARING

DESCRIPTION

The rear wheel bearing and rear wheel hub of this vehicle are a one-piece sealed unit, or hub and bearing unit type assembly (Unit III). The hub and bearing is mounted to the center of the rear axle using 4 mounting bolts. It has five wheel mounting studs on the hub flange.

All-Wheel-Drive vehicles have a hub and bearing unit with a splined hole in the center of the hub for rear driveshaft stub axle acceptance.

Front-Wheel-Drive vehicles with antilock brakes have an internally mounted wheel speed sensor and tone wheel. This hub and bearing can be identified by the rounded cap and molded in connector on the rear of the assembly (Fig. 7). The sensor and tone wheel cannot be serviced separately from the hub and bearing.

OPERATION

The hub and bearing has internal bearings that allow the hub to rotate with the tire and wheel assembly (and driveshaft on All-Wheel-Drive vehicles). The five wheel mounting studs mount the tire and wheel assembly, and disc brake rotor or brake drum to the vehicle.

On All-Wheel-Drive vehicles, the splined mating of the driveshaft stub axle and hub allows the driveshaft to rotate with the hub and wheel.

Front-Wheel-Drive vehicles equipped with antilock brakes have a wheel speed sensor and tone wheel mounted to the rear of the hub and bearing. The tone

HUB / BEARING (Continued)

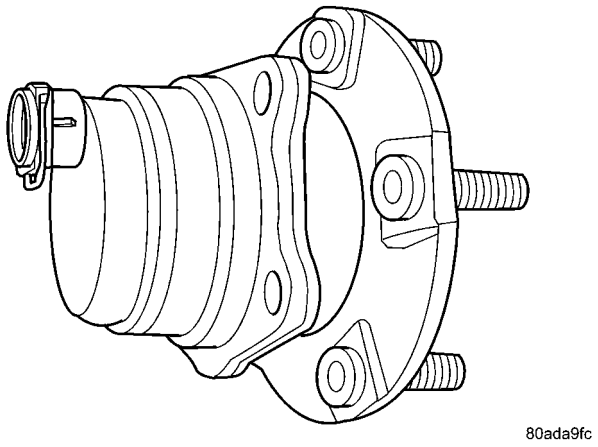

Fig. 7 Hub And Bearing - FWD With ABS

wheel rotates with the hub which is sensed by the wheel speed sensor.

DIAGNOSIS AND TESTING - HUB AND BEARING

The bearing contained in the hub and bearing assembly will produce noise and vibration when worn or damaged. The noise will generally change when the bearings are loaded. A road test of the vehicle is normally required to determine the location of a worn or damaged bearing.

Find a smooth level road surface and bring the vehicle up to a constant speed. When vehicle is at a constant speed, swerve the vehicle back and forth from the left and to the right. This will load and unload the bearings and change the noise level. When bearing damage is slight, the noise is sometimes noticeable at lower speeds and at other times is more noticeable at speeds above 105 km/h (65 mph).

REMOVAL

FRONT-WHEEL-DRIVE VEHICLES

(1) Raise vehicle. (Refer to LUBRICATION & MAINTENANCE/HOISTING - STANDARD PROCEDURE)

(2) Remove wheel and tire. (Refer to 22 - TIRES/WHEELS - REMOVAL)

(3) Remove brake drum or disc brake caliper and rotor from hub and bearing. (Refer to 5 - BRAKES/HYDRAULIC/MECHANICAL/DRUM - REMOVAL-)(Refer to 5 - BRAKES/HYDRAULIC/MECHANICAL/ROTOR - REMOVAL)

(4) If equipped with antilock brakes, perform the following:

(a) Remove secondary (yellow) retaining clip at rear of wheel speed sensor head (Fig. 8).

(b) Push up on metal retaining clip (Fig. 8) until it bottoms. This will release wheel speed sensor head from hub and bearing.

(c) While holding metal clip up, pull back on wheel speed sensor head removing it from hub and bearing.

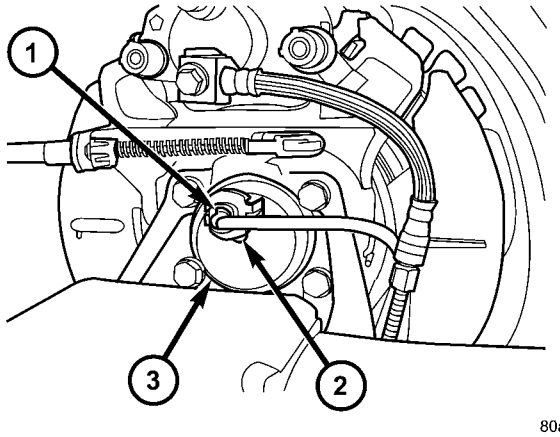

Fig. 8 Sensor Connector At Hub And Bearing

1 - SECONDARY SENSOR RETAINING CLIP
2 - METAL SENSOR RETAINING CLIP
3 - HUB AND BEARING

(5) Remove the 4 bolts attaching the hub and bearing to the rear axle.

CAUTION: Corrosion may occur between the hub and bearing, and the axle. If this occurs the hub and bearing will be difficult to remove from the axle. If the hub and bearing will not come out of the axle by pulling on it by hand, do not pound on the hub and bearing to remove it from the axle. Damage will occur. Use the following procedure.

(6) If the hub and bearing cannot be removed from the axle by hand, use Remover, Special Tool 8458 (Fig. 9) and the following procedure to press the hub and bearing out of the axle.

(a) Remove the two outboard spring plate bolts.

(b) Thread Threaded Guide Pins into hub and bearing mounting bolt holes.

(c) Using the spring plate bolts, install the Screw Mount, Special Tool 8458–2, as shown (Fig. 9). Mount the Screw Mount to the spring plate with the tool number facing the hub and bearing and the beveled edge on the bottom facing the spring, otherwise the Forcing Screw will rub the spring plate when installed.

(d) Place Push Plate, Special Tool 8458–1, on ends of Threaded Guide Pins

(e) Place a dab of grease in dimple of Push Plate.

HUB / BEARING (Continued)

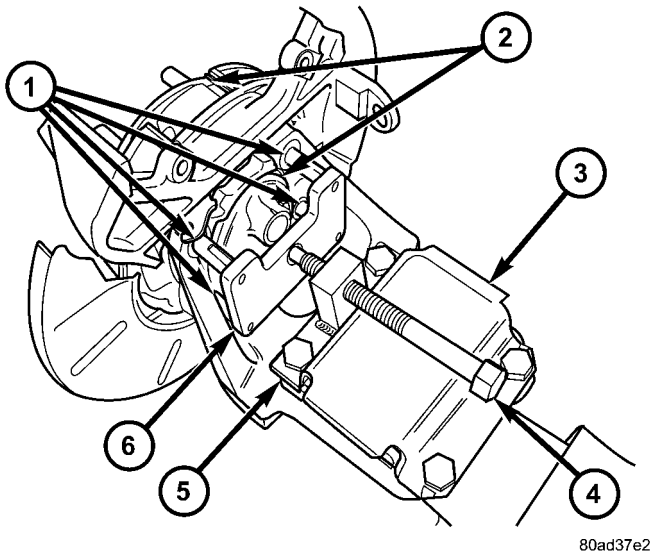

Fig. 9 Removal Using Special Tool 8458

1 - THREADED GUIDE PINS 8458-4
2 - HUB AND BEARING
3 - LEAF SPRING PLATE
4 - FORCING SCREW 8458-3
5 - SCREW MOUNT 8458-2
6 - PUSH PLATE 8458-1

(f) Install Forcing Screw, Special Tool 8458–3, through Screw Mount from rear.

(g) Tighten the Forcing Screw up against dimple in Push Plate and press hub and bearing out of axle by continuing to tighten screw.

(h) Remove the tool.

(i) Reinstall the two outboard spring plate bolts. Tighten the bolts to 102 N·m (75 ft. lbs.) torque.

(7) Remove the hub/bearing from the rear axle and brake support plate.

ALL-WHEEL-DRIVE VEHICLES

(1) Set the parking brake. **The parking brake is set to keep the hub and bearing, and axle shaft from rotating when loosening the hub nut.**

(2) Raise vehicle. (Refer to LUBRICATION & MAINTENANCE/HOISTING - STANDARD PROCEDURE)

(3) Remove the wheel/tire assembly. (Refer to 22 - TIRES/WHEELS - REMOVAL)

(4) Remove the cotter pin and nut retainer (Fig. 18) from the stub shaft of the outer C/V joint.

(5) Remove the spring washer (Fig. 17) from the stub shaft of the outer C/V joint.

(6) Remove the hub nut and washer (Fig. 16) from the stub shaft of the outer C/V joint.

(7) Remove the 6 bolts mounting the driveshaft inner joint to the output shaft of the rear drive line module.

(8) Remove the rear wheel speed sensor (Fig. 19) from the rear hub/bearing.

(9) Release the parking brake.

(10) Remove the disc brake caliper to adapter guide pin bolts (Fig. 15).

(11) Remove rear caliper from adapter using the following procedure. First rotate front of caliper up from the adapter. Then pull the rear of the caliper and the outboard brake shoe anti-rattle clip out from under the rear abutment on the adapter (Fig. 14).

(12) Support caliper to prevent the weight of the caliper from damaging the flexible brake hose (Fig. 10).

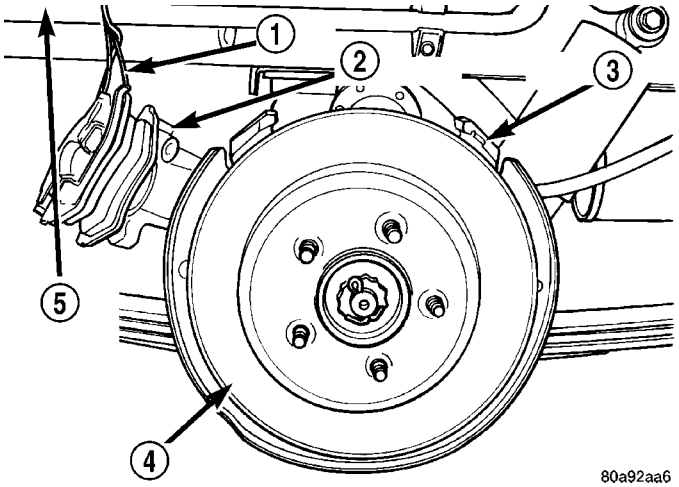

Fig. 10 Correctly Supported Caliper

1 - WIRE
2 - CALIPER
3 - ADAPTER
4 - ROTOR
5 - INNER FENDER

(13) Remove the rotor from the hub/bearing.

(14) Remove driveshaft from rear drive line module and hub/bearing. Driveshaft is removed by first compressing the inner joint on the driveshaft and removing it from the drive line module. Then, slide the outer joint of the driveshaft out of the hub/bearing.

(15) Remove the hub/bearing to axle mounting bolts (Fig. 13).

CAUTION: Corrosion may occur between the hub/bearing and the axle. If this occurs the hub/bearing will be difficult to remove from the axle. If the hub/bearing will not come out of the axle by pulling on it by hand, do not pound on the hub/bearing to remove it from the axle. Pounding on the hub/bearing to remove it from the axle will damage the hub/bearing. This damage will result in noise or failure of the hub/bearing. To remove a hub/bearing which is corroded to the axle, lightly tap the disc brake caliper adapter using a soft faced hammer. This will remove both the disc brake caliper adapter and hub/bearing from the axle. The hub/bearing will then need to be removed from the caliper adapter.

HUB / BEARING (Continued)

(16) Remove the hub/bearing from the axle. (Fig. 12).

(17) If the disc brake caliper adapter and hub/bearing were removed as an assembly from the axle and the hub/bearing cannot be removed from the adapter by hand, use the following procedure to remove it from the adapter. With a helper supporting the caliper adapter in his hands, position Remover, Special Tool 8214-1 on the cast housing of hub/bearing (Fig. 11). **Do not position special tool on inner race of hub/bearing.** Lightly strike Remover, Special Tool 8214-1 with a hammer to remove the hub/bearing from the caliper adapter.

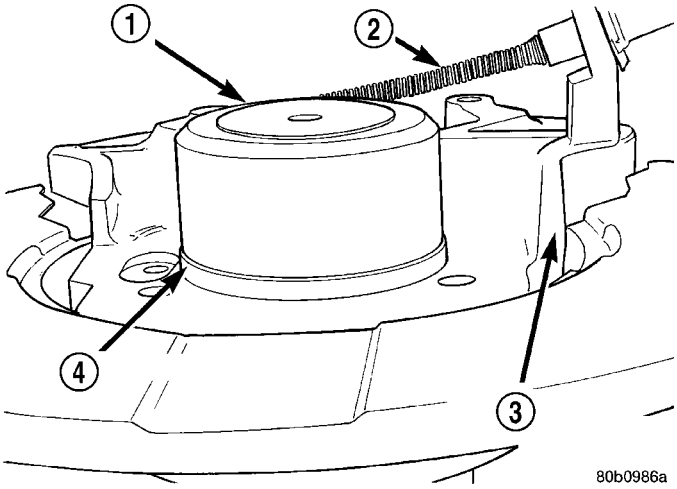

Fig. 11 Hub/Bearing Removal From Caliper Adapter

1 - SPECIAL TOOL 8214-1
2 - PARK BRAKE CABLE
3 - DISC BRAKE CALIPER ADAPTER
4 - HUB/BEARING

INSTALLATION

FRONT-WHEEL-DRIVE VEHICLES

(1) Install the 4 hub and bearing to axle mounting bolts into the holes in the flange of the rear axle.

(2) Install the rear brake support plate on the 4 mounting bolts installed in the flange of the rear axle.

(3) Align the rear hub and bearing with the 4 mounting bolts and start mounting bolts into hub and bearing. Tighten the 4 bolts in a crisscross pattern until the hub and bearing and brake support plate is fully and squarely seated onto flange of rear axle. Tighten the 4 mounting bolts to a torque of 129 N·m (95 ft. lbs.)

NOTE: If equipped with antilock brakes, make sure wheel speed sensor stays clean and dry as it is installed into the hub and bearing cap.

(4) If the vehicle is equipped with antilock brakes, perform the following:

(a) If metal sensor retaining clip is not in the neutral installed position on hub and bearing cap, install from the bottom, if necessary, and push clip upward until it snaps into position.

(b) Install wheel speed sensor head into rear of hub and bearing aligning index tab with the notch in the top of the mounting hole. Push the sensor in until it snaps into place on the metal retaining clip.

(c) Install secondary (yellow) retaining clip over wheel speed sensor head and engage the tabs on each side (Fig. 8).

(5) Install brake drum or disc brake rotor and brake caliper. (Refer to 5 - BRAKES/HYDRAULIC/MECHANICAL/DRUM - INSTALLATION)(Refer to 5 - BRAKES/HYDRAULIC/MECHANICAL/ROTOR - INSTALLATION)

(6) Install wheel and tire (Refer to 22 - TIRES/WHEELS - INSTALLATION). Tighten the wheel nuts in the proper sequence to a torque of 135 N·m (100 ft. lbs.).

(7) Adjust the rear brakes as necessary. (Refer to 5 - BRAKES/HYDRAULIC/MECHANICAL/BRAKE PADS/SHOES - ADJUSTMENTS)

(8) Lower vehicle.

(9) Road test vehicle to ensure proper operation of brakes.

ALL-WHEEL-DRIVE VEHICLES

(1) Install hub/bearing on end of axle. (Fig. 12).

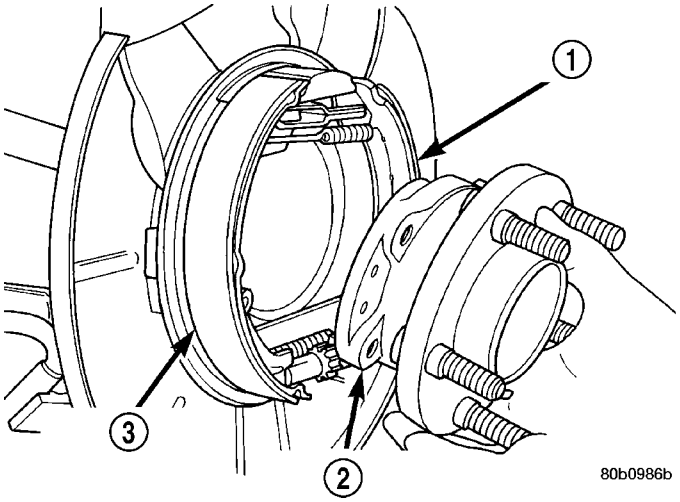

Fig. 12 Hub/Bearing Removal And Installation

1 - PARK BRAKE BRAKE SHOE
2 - HUB/BEARING
3 - PARK BRAKE BRAKE SHOE

(2) Install the hub/bearing mounting bolts. In a progressive crisscross pattern, tighten the 4 hub/bearing mounting bolts (Fig. 13) until the disc brake caliper adapter and hub/bearing are squarely seated

against the axle. Then tighten the hub/bearing mounting bolts to a torque of 129 N·m (95 ft. lbs.).

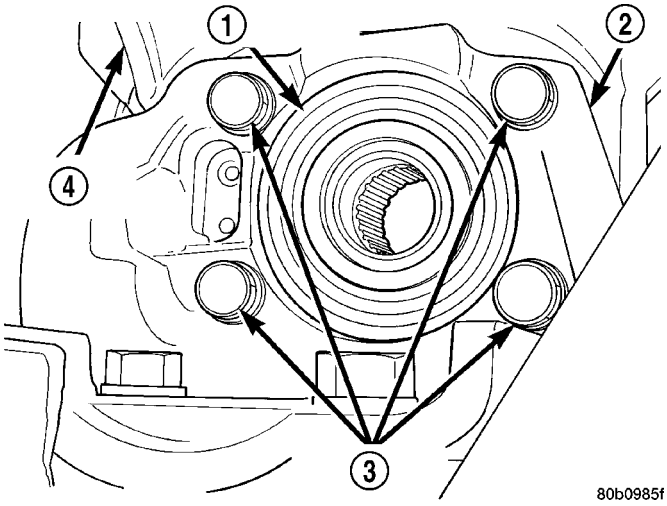

Fig. 13 Hub/Bearing Mounting Bolts

1 - HUB/BEARING
2 - AXLE
3 - MOUNTING BOLTS
4 - CALIPER ADAPTER

(3) Install driveshaft in hub/bearing and on output shaft of rear drive line module. Driveshaft is installed by first sliding the outer joint of the driveshaft into the hub/bearing and then compressing the inner joint on the driveshaft and installing it on the output shaft the drive line module.

(4) Install rotor on hub/bearing.

(5) Carefully lower disc brake caliper and brake shoes over rotor and onto caliper adapter by reversing the removal procedure (Fig. 14).

CAUTION: When installing guide pin bolts extreme caution should be taken not to cross-thread the caliper guide pin bolts.

(6) Install the disc brake caliper guide pin bolts (Fig. 15). Tighten the guide pin bolts to a torque of 35 N·m (26 ft. lbs.).

(7) Clean all foreign material off the threads of the outer C/V joint stub shaft. Install the washer and hub nut (Fig. 16) on the stub shaft of the outer C/V joint.

(8) Lower vehicle.

(9) Set the park brake. **This is required to keep the driveshaft from rotating when tightening and torquing the hub nut and driveshaft inner joint to driveline module mounting nuts.**

(10) Raise vehicle.

(11) Tighten the driveshaft inner joint to drive line module output shaft mounting bolts to a torque of 61 N·m (45 ft. lbs.).

(12) Tighten the outer C/V joint hub nut (Fig. 16) to a torque of 244 N·m (180 ft. lbs.).

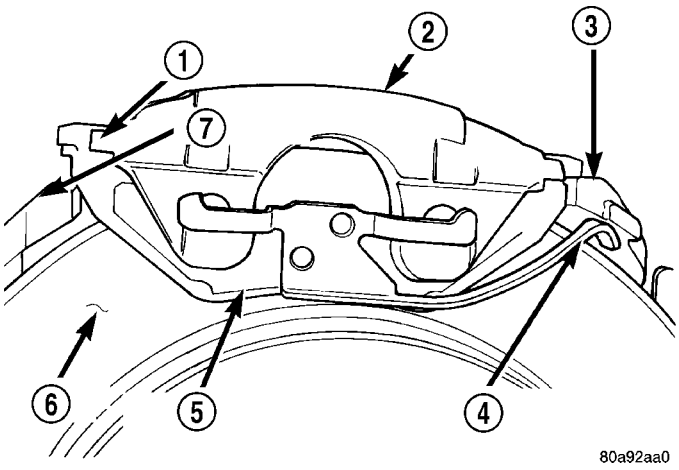

Fig. 14 Removing/Installing Caliper (Left Side Shown)

1 - LIFT THIS END OF CALIPER AWAY FROM ADAPTER FIRST
2 - DISC BRAKE CALIPER
3 - ADAPTER ABUTMENT
4 - OUTBOARD BRAKE SHOE HOLD DOWN CLIP
5 - OUTBOARD BRAKE SHOE
6 - ROTOR
7 - ADAPTER

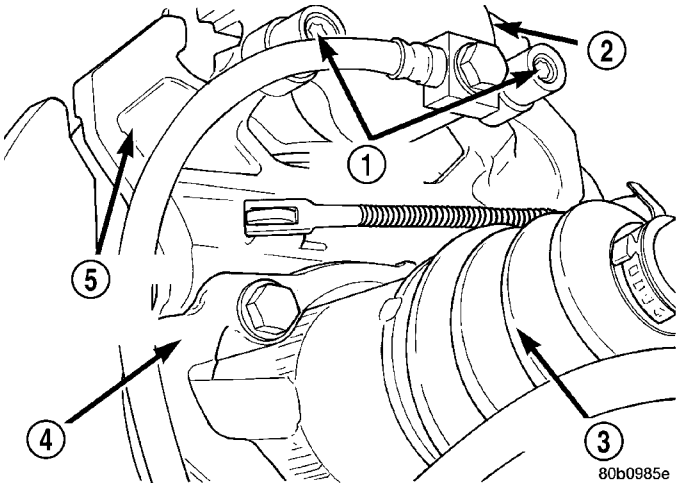

Fig. 15 Caliper Guide Pin Bolts

1 - STUD PIN BOLTS
2 - DISC BRAKE CALIPER
3 - DRIVESHAFT
4 - AXLE
5 - DISC BRAKE CALIPER ADAPTER

(13) Install the spring washer (Fig. 17) on the stub shaft of the outer C/V joint.

(14) Install the nut retainer and cotter pin (Fig. 18) on the stub shaft of the outer C/V joint.

(15) Install the wheel speed sensor on the hub/bearing and adapter. Install the wheel speed sensor attaching bolt (Fig. 19). Tighten the wheel speed sensor attaching bolt to a torque of 12 N·m (105 in. lbs).

(16) Install wheel and tire. (Refer to 22 - TIRES/WHEELS - INSTALLATION)

HUB / BEARING (Continued)

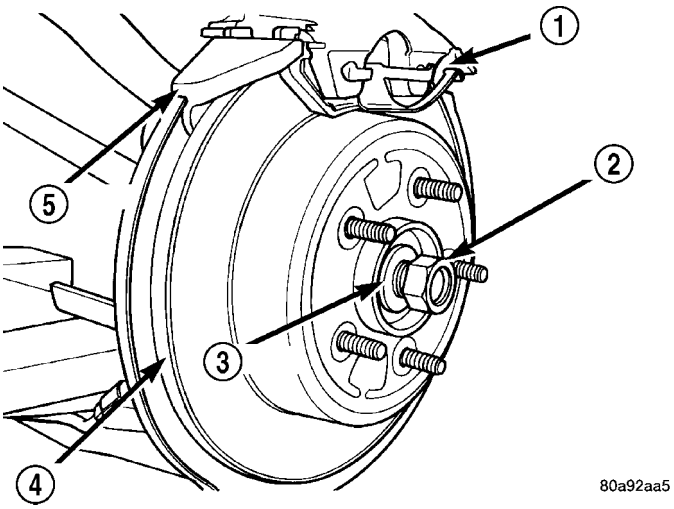

Fig. 16 Hub Nut And Washer

1 - CALIPER
2 - HUB NUT
3 - WASHER
4 - ROTOR
5 - ADAPTER

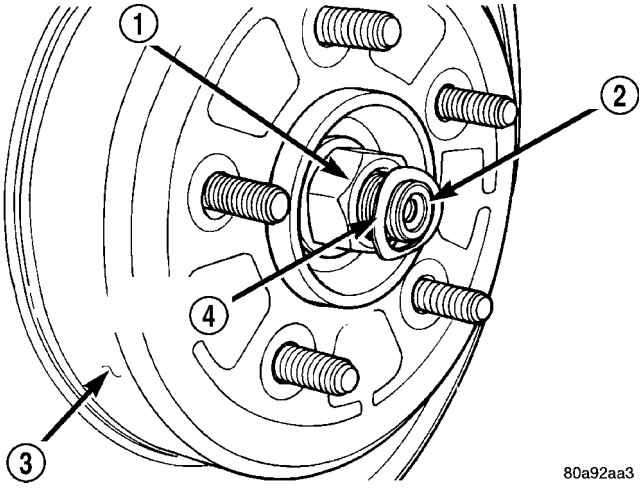

Fig. 17 Spring Washer

1 - HUB NUT
2 - STUB SHAFT
3 - ROTOR
4 - SPRING WASHER

(17) Tighten the wheel mounting stud nuts in proper sequence until all nuts are torqued to half specification. Then repeat the tightening sequence to the full specified torque of 135 N·m (100 ft. lbs.).

(18) Lower vehicle.

CAUTION: Before moving vehicle, pump the brake pedal several times to insure the vehicle has a firm brake pedal to adequately stop vehicle.

(19) Road test vehicle to ensure proper operation of the brake system.

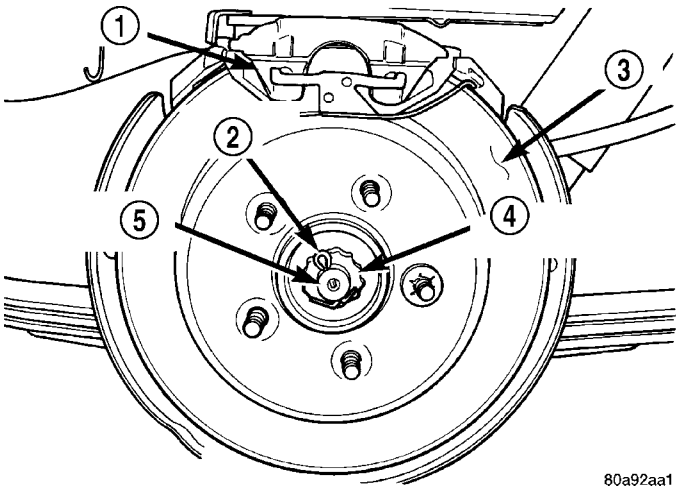

Fig. 18 Cotter Pin And Nut Retainer

1 - CALIPER
2 - COTTER PIN
3 - ROTOR
4 - NUT RETAINER
5 - OUTER C/V JOINT

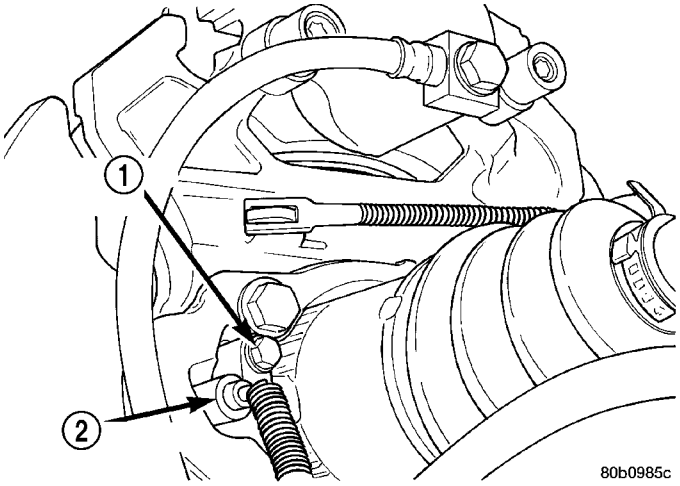

Fig. 19 Wheel Speed Sensor

1 - MOUNTING BOLT
2 - WHEEL SPEED SENSOR

JOUNCE BUMPER

DESCRIPTION

There are two jounce bumpers used in the rear suspension. One mounts to each frame rail above the rear axle.

OPERATION

The jounce bumper limits suspension travel and metal-to-metal contact of the rear axle with the frame under full jounce conditions.

JOUNCE BUMPER (Continued)

REMOVAL

REMOVAL - AWD, HEAVY DUTY, CARGO

(1) Using slip-joint pliers grasp the base of the jounce bumper. Turn the base counterclockwise (Fig. 20).

(2) Remove the jounce bumper from the frame rail.

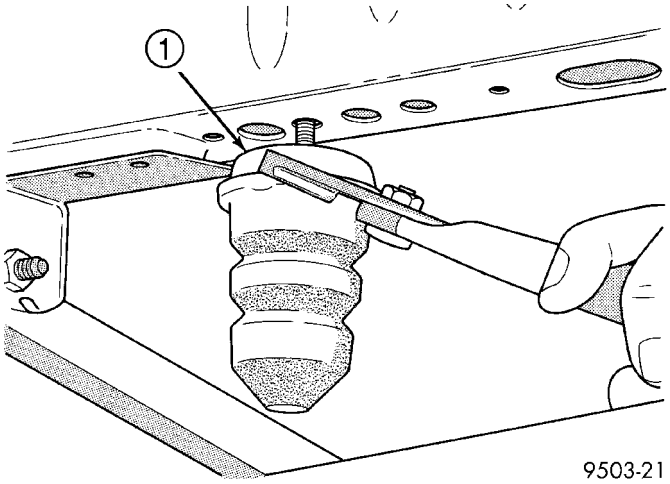

Fig. 20 Jounce Bumper

1 - JOUNCE BUMPER

REMOVAL - FRONT-WHEEL-DRIVE

(1) Remove the bolt attaching the jounce bumper to frame rail (Fig. 21).

(2) Remove the jounce bumper from the frame rail.

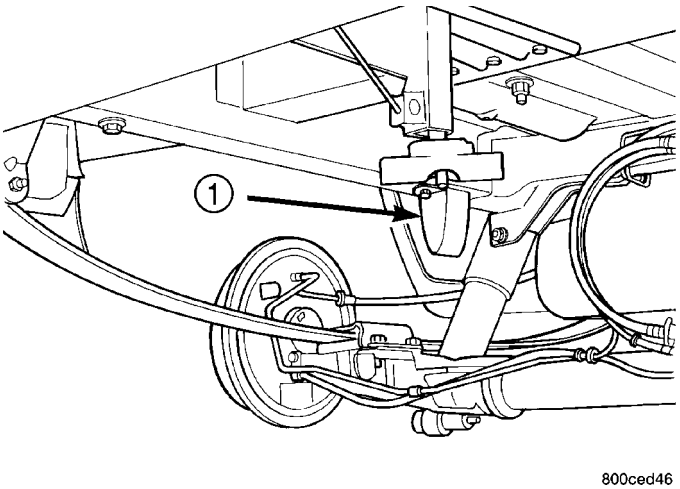

Fig. 21 Jounce Bumper - FWD

1 - **JOUNCE BUMPER**

INSTALLATION

INSTALLATION - AWD, HEAVY DUTY, CARGO

(1) Install jounce bumper through bumper support plate and thread into welded nut in frame rail.

(2) Tighten the jounce bumper to 33 N·m (290 in. lbs.) torque.

INSTALLATION - FRONT-WHEEL-DRIVE

(1) Hook the forward end of the jounce bumper bracket in the mounting hole of the frame rail, then install the mounting bolt in the opposite end, securing the bumper to the frame rail. Tighten the jounce bumper mounting bolt to 33 N·m (290 in. lbs.) torque.

SHOCK ABSORBER

DESCRIPTION

There is one shock absorber on each side of the rear suspension. The top of each shock absorber is bolted to the frame rail. The bottom of each shock absorber is bolted to the rear axle.

This vehicle is available with either standard type or load-leveling shock absorbers. On the exterior, load-leveling shock absorbers are larger in diameter than standard shock absorbers. The load-leveling shock absorbers mount the same as the standard shock absorbers.

OPERATION

The shock absorber dampens jounce and rebound motions of the spring and suspension.

Each load-leveling shock absorber is a self-leveling, self-contained vehicle leveling system and shock absorber combined. It does not require an external compressor, hoses, or height leveling sensors. All the height leveling sensors, hydraulic pump, etc., are contained inside the shock absorber. It uses road inputs (bumps, stops, starts, turns, acceleration, deceleration, etc.) to activate pumping, which results in the extension and compression of the shock absorber.

REMOVAL - SHOCK ABSORBER

(1) Raise vehicle. (Refer to LUBRICATION & MAINTENANCE/HOISTING - STANDARD PROCEDURE)

(2) Support the rear axle of the vehicle using 2 jackstands positioned at the outer ends of the axle.

NOTE: If the shock absorber lower mounting bolt deflects upward during removal, raise axle by adjusting the support jack. If the lower shock absorber bolt deflects downward during removal, lower the axle by adjusting the support jack.

(3) Remove the shock absorber lower mounting bolt.

SHOCK ABSORBER (Continued)

(4) While holding shock absorber, remove the shock absorber upper mounting bolt and shock absorber.

DISASSEMBLY - SHOCK ABSORBER (UPPER BUSHING)

NOTE: This procedure applies to load-leveling shock absorbers only.

(1) Remove the shock absorber from the vehicle.
(2) Install the Receiver, Special Tool 8526-1, into the cup of the Ball Joint Press, Special Tool C-4212F, and tighten the set screw. Install the Driver, Special Tool 8526-2, on the tip of the Ball Joint Press screw drive as shown (Fig. 22).

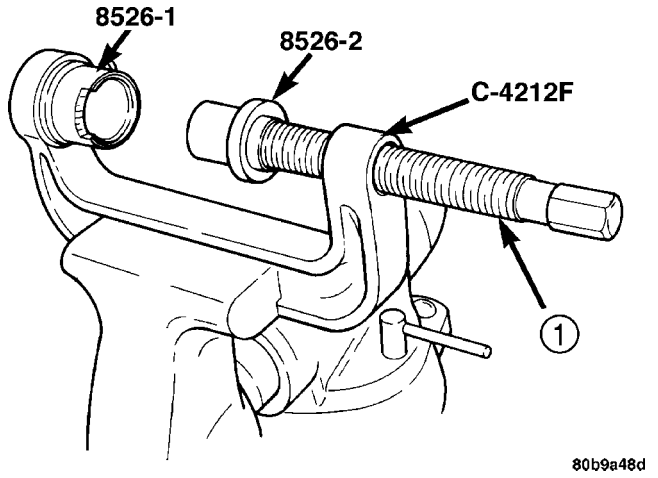

Fig. 22 Special Tools Positioned For Removal

1 - SCREW DRIVE

NOTE: It works well to place the Ball Joint Press, Special Tool C-4212F, in a bench vise as shown (Fig. 22) to perform this procedure.

(3) Place the shock absorber upper mounting eye in the Receiver so the notch in the Receiver clears the shock absorber body (Fig. 23).
(4) Tighten the screw drive until the Driver contacts the outer circumference of the bushing evenly (Fig. 23). Continue to tighten the screw drive until the bushing is pressed completely out of the shock absorber eye and into the Receiver.
(5) Back off the screw drive and remove the bushing from the Receiver.

ASSEMBLY - SHOCK ABSORBER (UPPER BUSHING)

NOTE: This procedure applies to load-leveling shock absorbers only.

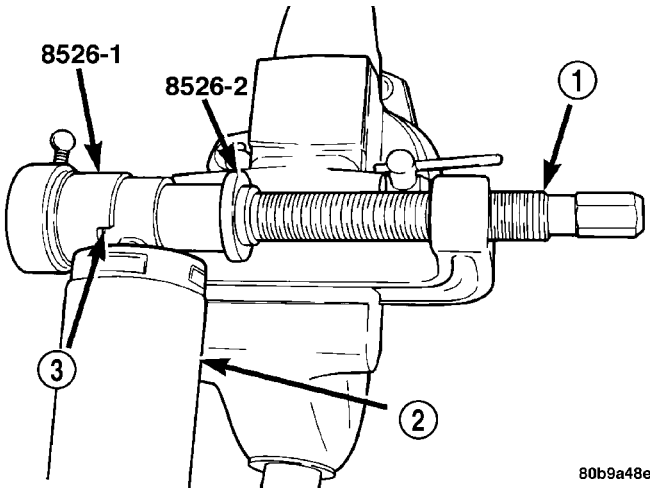

Fig. 23 Removing Bushing From Shock Absorber

1 - SCREW DRIVE
2 - SHOCK ABSORBER
3 - NOTCH

(1) Install the Receiver, Special Tool 8526-1, into the cup of the Ball Joint Press, Special Tool C-4212F, and tighten the set screw. Install the Driver, Special Tool 8526-2, on the tip of the Ball Joint Press screw drive as shown (Fig. 24). Position the Driver this way to seat the bushing to its correct depth.

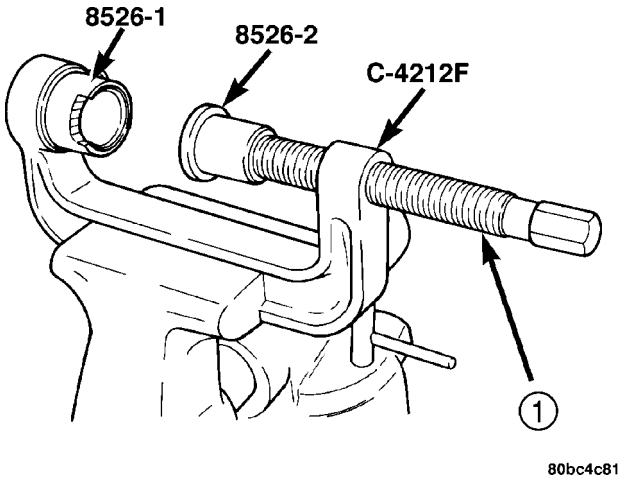

Fig. 24 Special Tools Positioned For Installation

1 - SCREW DRIVE

(2) Place the shock absorber upper mounting eye in the Receiver so the notch in the Receiver clears the shock absorber body (Fig. 25).
(3) Position the bushing between the shock absorber eye and the Driver (Fig. 25). Tighten the screw drive until the Driver, bushing, and shock absorber eye are touching and squarely aligned.
(4) Press the bushing into the shock absorber eye until the Driver bottoms against the face of the eye.
(5) Back off the Ball Joint Press screw drive and remove the shock absorber from the press.

SHOCK ABSORBER (Continued)

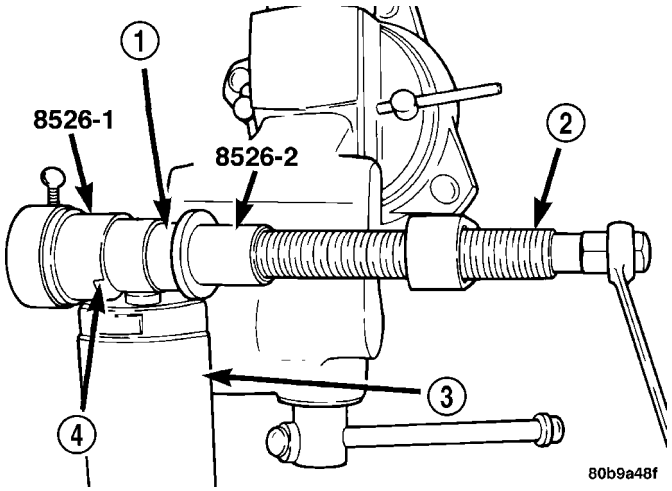

Fig. 25 Installing Bushing In Shock Absorber

1 - BUSHING
2 - SCREW DRIVE
3 - SHOCK ABSORBER
4 - NOTCH

(6) Install the shock absorber on the vehicle. Refer to REMOVAL AND INSTALLATION in this section for the procedure.

INSTALLATION - SHOCK ABSORBER

(1) While holding shock absorber in position against the frame rail, install the shock absorber upper mounting bolt.

(2) Install the shock absorber lower mounting bolt securing the lower end of the shock absorber to the axle.

(3) Remove the support jack.

(4) Lower the vehicle to the ground so the full curb weight of the vehicle is supported by the suspension.

(5) Tighten the upper and lower shock absorber mounting bolt to a torque of 88 N·m (65 ft. lbs.).

SPRING - AWD

REMOVAL

(1) Raise vehicle on frame-contact hoist as follows:

(a) Position the hoist arm supporting the corner of the vehicle to be serviced against a block of wood placed on the body sill as shown (Fig. 26).

(b) Position the remaining hoist arms at each corner of the vehicle in the normal fashion. (Refer to LUBRICATION & MAINTENANCE/HOISTING - STANDARD PROCEDURE)

(c) Raise the vehicle to a comfortable working level.

(2) Position an under-hoist utility jack or transmission jack under rear axle toward the side needing spring replacement. Jack pad should just contact axle.

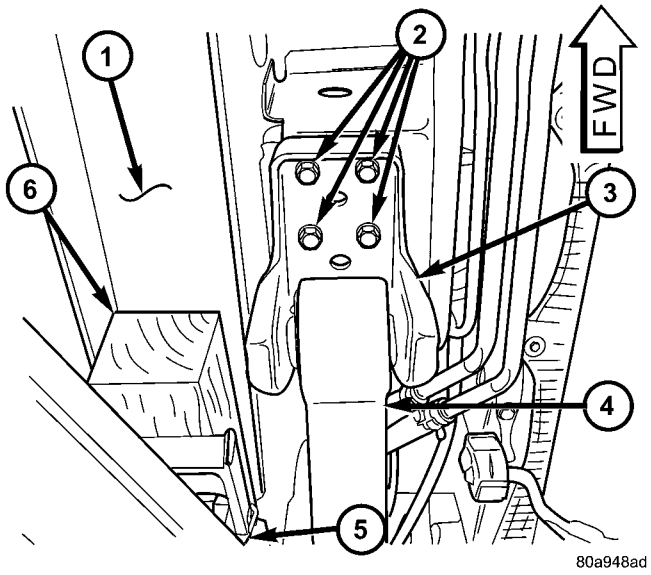

Fig. 26 LIFTING POINT AND SPRING MOUNT

1 - BODY SILL AREA
2 - MOUNTING BOLTS
3 - SPRING MOUNTING BRACKET
4 - LEAF SPRING
5 - HOIST LIFT ARM
6 - WOODEN BLOCK

NOTE: If shock absorber bolt deflects upward during removal, raise axle by adjusting support jack. If shock absorber bolt deflects downward during removal, lower axle by adjusting support jack (or by pulling on axle).

(3) Begin removal of the shock absorber lower mounting bolt (Fig. 27).

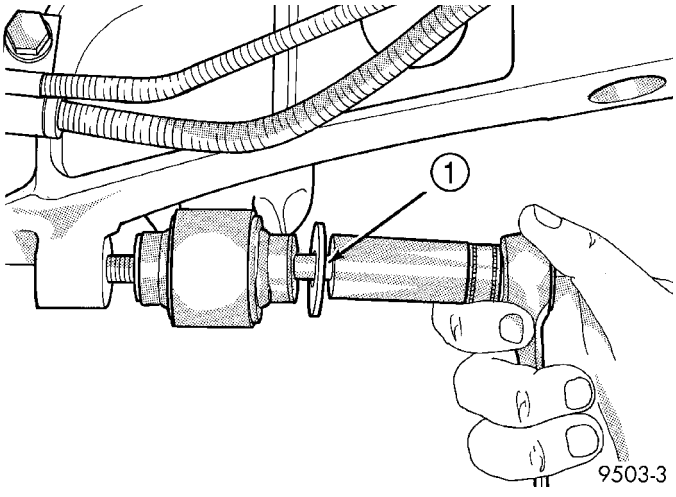

Fig. 27 Rear Shock Absorber Mounting Bolt

1 - SHOCK BOLT

(4) Using 2 jack stands positioned under the outer ends of the axle, raise the axle enough to remove the weight of the axle from the rear springs.

SPRING - AWD (Continued)

(5) Loosen and remove the axle plate bolts from the rear axle (Fig. 28).

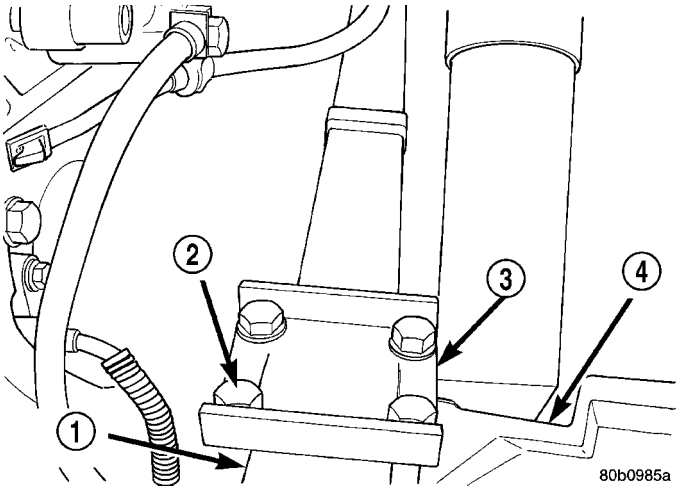

Fig. 28 Axle Plate Bolts

1 - LEAF SPRING
2 - AXLE PLATE BOLTS (4)
3 - AXLE PLATE
4 - AXLE

(6) Using the jack stands **slowly** lower the rear axle, permitting the rear springs to hang free.

(7) Loosen and remove the 4 bolts at the front mount of the rear leaf spring (Fig. 26).

(8) Loosen and remove the 2 bolts and the 2 pin nuts from the spring shackle for the rear leaf spring (Fig. 29). Then remove the inner half of the spring shackle from the outer half hanger of the spring hanger and the spring.

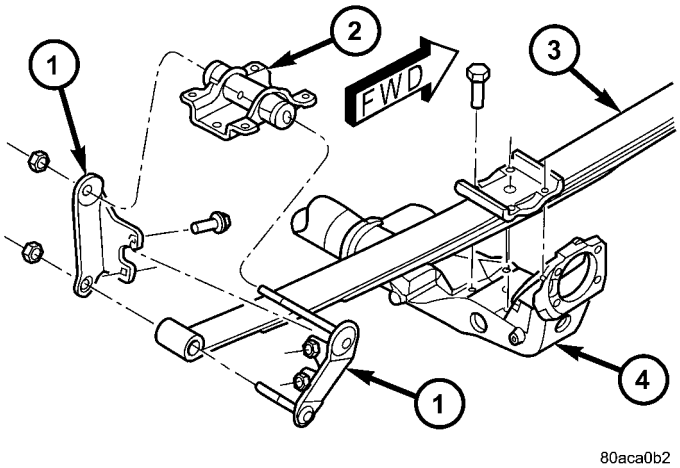

Fig. 29 All-Wheel-Drive Rear Suspension

1 - SHACKLE
2 - REAR MOUNT (HANGER)
3 - LEAF SPRING (MULTI-LEAF)
4 - AWD REAR AXLE

(9) Remove the rear leaf spring from the outer half of the spring shackle.

(10) Remove the leaf spring from the vehicle.

(11) Loosen and remove the pivot bolt from the front mount of the rear leaf spring. (Fig. 30).

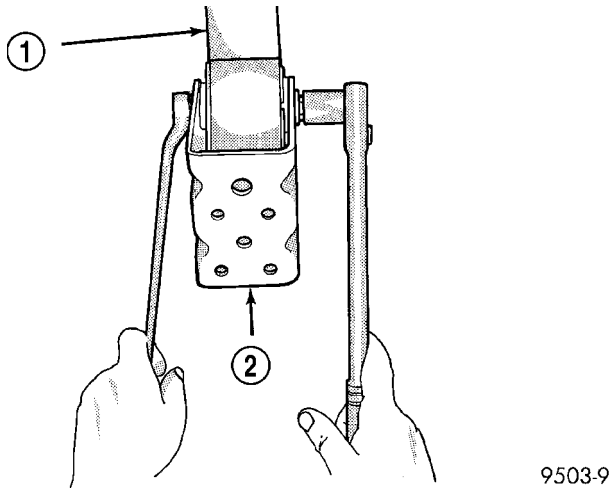

Fig. 30 Leaf Spring Front Mount (Typical)

1 - LEAF SPRING
2 - SPRING MOUNT

INSTALLATION

CAUTION: Pivot bolt must face inboard to prevent structural damage during installation of spring.

(1) Install the front eyelet of the rear leaf spring into the spring mount. Install the pivot bolt and nut. **Do not tighten the pivot bolt at this time.**

(2) Position the front spring mount for the rear leaf spring against the floor pan of the vehicle. Install the 4 mounting bolts for the front spring mount (Fig. 26). Tighten the 4 mounting bolts to a torque of 61 N·m (45 ft. lbs.).

(3) Install the rear of the leaf spring onto the outer half of the rear shackle. Install the inner half of the rear hanger. Install the pin nuts and bolts on the rear shackle, **but do not tighten at this time.**

(4) Raise axle assembly into correct position with axle centered under spring locator post.

(5) Install axle plate bolts (Fig. 28). Tighten bolts to 95 N·m (70 ft. lbs.) torque.

(6) Install shock absorber bolts. **Do not tighten at this time.**

(7) Lower the vehicle and remove hoist arms and block of wood from under vehicle.

SPRING - AWD (Continued)

CAUTION: The following sequence must be followed when tightening the pin nuts on the rear hanger for the rear leaf spring. First the hanger pin nuts must be tightened to the specified torque shown below. Then tighten the retaining bolts for the inner to outer half of the spring hanger to the torque specification listed below. This sequence must be followed to properly seat the bushings into the springs and to avoid bending the spring hanger.

(8) Tighten the spring front pivot bolt to 156 N·m (115 ft. lbs.) torque.
(9) Tighten rear spring shackle pin nuts to 61 N·m (45 ft. lbs.) torque.
(10) Tighten rear spring shackle inner to outer half retaining bolts to 61 N·m (45 ft. lbs.) torque.
(11) Tighten the lower shock absorber mounting bolt to 102 N·m (75 ft. lbs.) torque.

SPRING - CARGO

REMOVAL

(1) Raise vehicle on frame-contact hoist as follows:
(a) Position the hoist arm supporting the corner of the vehicle to be serviced against a block of wood placed on the body sill as shown (Fig. 26).
(b) Position the remaining hoist arms at each corner of the vehicle in the normal fashion. (Refer to LUBRICATION & MAINTENANCE/HOISTING - STANDARD PROCEDURE)
(c) Raise the vehicle to a comfortable working level.
(2) Position an under-hoist utility jack or transmission jack under rear axle toward the side needing spring replacement. Jack pad should just contact axle.

NOTE: If shock absorber bolt deflects upward during removal, raise axle by adjusting support jack. If shock absorber bolt deflects downward during removal, lower axle by adjusting support jack (or by pulling on axle).

(3) Begin removal of the shock absorber lower mounting bolt (Fig. 27).
(4) Using 2 jack stands positioned under the outer ends of the axle, raise the axle enough to remove the weight of the axle from the rear springs.
(5) Loosen and remove the axle plate bolts from the rear axle (Fig. 28).
(6) Using the jack stands **slowly** lower the rear axle, permitting the rear springs to hang free.
(7) Loosen and remove the 4 bolts at the front mount of the rear leaf spring (Fig. 26).
(8) Loosen and remove the nuts from the spring hanger for the rear leaf spring (Fig. 35).
(9) Remove the hanger plate from the hanger and remove the spring from the spring hanger (Fig. 35).
(10) Remove the leaf spring from the vehicle.
(11) Loosen and remove the pivot bolt from the front mount of the rear leaf spring. (Fig. 30).

INSTALLATION

CAUTION: Pivot bolt must face inboard to prevent structural damage during installation of spring.

(1) Install the front eyelet of the rear leaf spring into the spring mount. Install the pivot bolt and nut. **Do not tighten the pivot bolt at this time.**
(2) Position the front spring mount for the rear leaf spring against the floor pan of the vehicle. Install the 4 mounting bolts for the front spring mount (Fig. 26). Tighten the 4 mounting bolts to a torque of 61 N·m (45 ft. lbs.).
(3) Install rear of spring onto rear spring shackle. Install shackle plate and nuts (Fig. 35). **Do not tighten at this time.**
(4) Raise axle assembly into correct position with axle centered under spring locator post.
(5) Install axle plate bolts (Fig. 28). Tighten bolts to 95 N·m (70 ft. lbs.) torque.
(6) Install shock absorber bolts. **Do not tighten at this time.**
(7) Lower the vehicle and remove hoist arms and block of wood from under vehicle.

CAUTION: The following sequence must be followed when tightening the pin nuts on the rear hanger for the rear leaf spring. First the hanger pin nuts must be tightened to the specified torque shown below. Then tighten the retaining bolts for the inner to outer half of the spring hanger to the torque specification listed below. This sequence must be followed to properly seat the bushings into the springs and to avoid bending the spring hanger.

(8) Tighten the spring front pivot bolt to 156 N·m (115 ft. lbs.) torque.
(9) Tighten rear spring shackle pin nuts to 61 N·m (45 ft. lbs.) torque.
(10) Tighten the lower shock absorber mounting bolt to 102 N·m (75 ft. lbs.) torque.

SPRING - FWD

REMOVAL

(1) Raise vehicle on frame-contact hoist as follows:
(a) Position the hoist arm supporting the corner of the vehicle to be serviced against a block of wood placed on the body sill as shown (Fig. 31).

SPRING - FWD (Continued)

(b) Position the remaining hoist arms at each corner of the vehicle in the normal fashion. (Refer to LUBRICATION & MAINTENANCE/HOISTING - STANDARD PROCEDURE)

(c) Raise the vehicle to a comfortable working level.

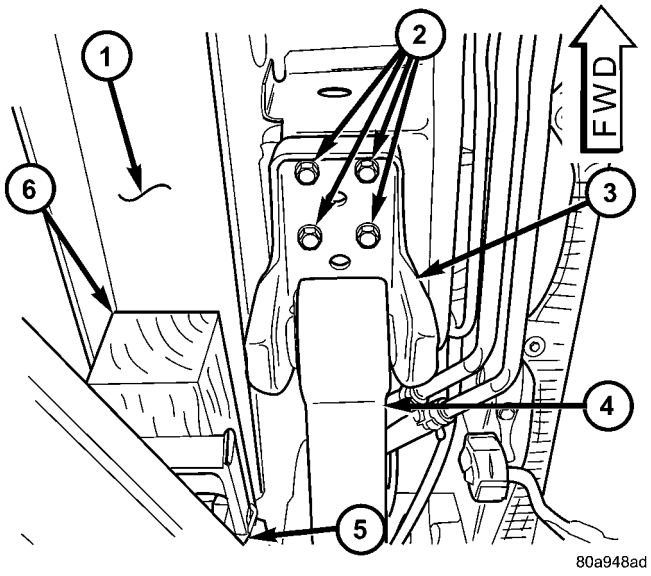

Fig. 31 Lifting Point And Spring Mount

1 - BODY SILL AREA
2 - MOUNTING BOLTS
3 - SPRING MOUNTING BRACKET
4 - LEAF SPRING
5 - HOIST LIFT ARM
6 - WOODEN BLOCK

(2) Position an under-hoist utility jack or transmission jack under rear axle toward the side needing spring replacement. Jack pad should just contact axle.

(3) Remove the shock absorber lower mounting bolt (Fig. 32).

NOTE: If shock absorber bolt deflects upward during removal, raise axle by adjusting support jack. If shock absorber bolt deflects downward during removal, lower axle by adjusting support jack (or by pulling on axle).

(4) Using 2 jack stands positioned under the outer ends of the axle, raise the axle enough to remove the weight of the axle from the rear springs.

(5) Loosen and remove the spring plate bolts from the rear axle (Fig. 33).

(6) Remove the spring plate from the rear axle and the leaf spring (Fig. 34).

(7) Using the jack stands **slowly** lower the rear axle, permitting the rear springs to hang free.

(8) Loosen and remove the 4 bolts securing the front mount of the leaf spring to the vehicle (Fig. 31).

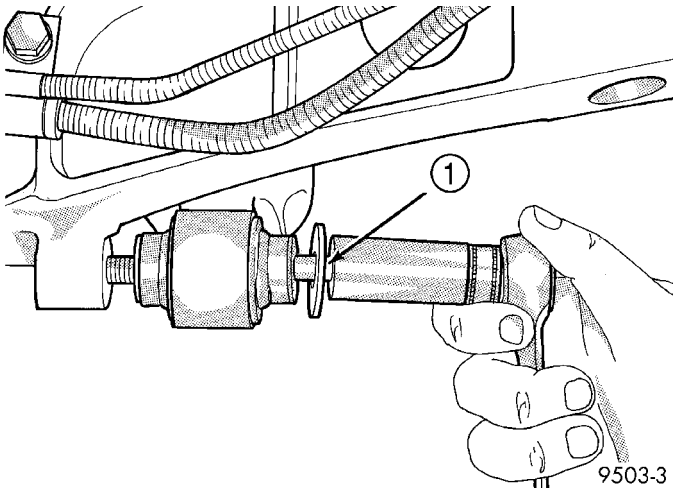

Fig. 32 Rear Shock Mounting Bolt

1 - SHOCK BOLT

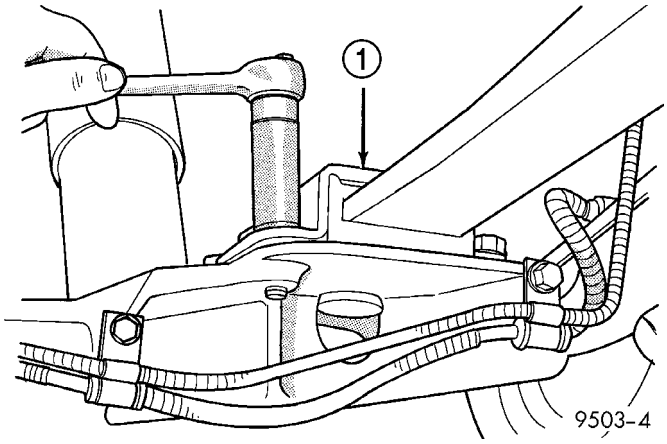

Fig. 33 Spring Plate Bolts

1 - SPRING PLATE

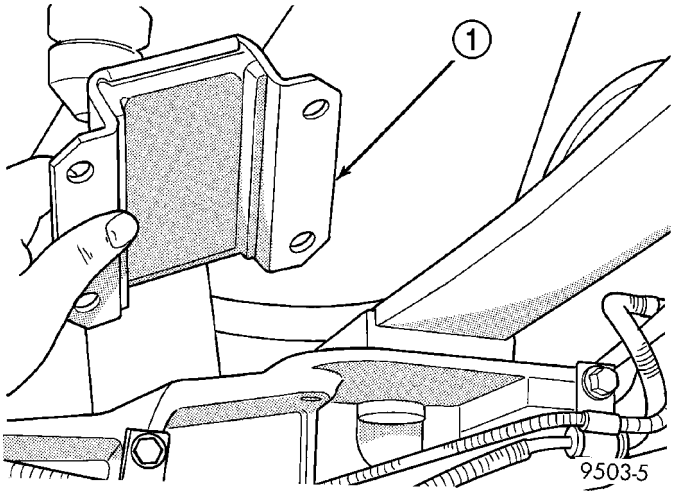

Fig. 34 Spring Plate

1 - SPRING PLATE

SPRING - FWD (Continued)

(9) Loosen and remove the nuts from the spring shackle (Fig. 35).

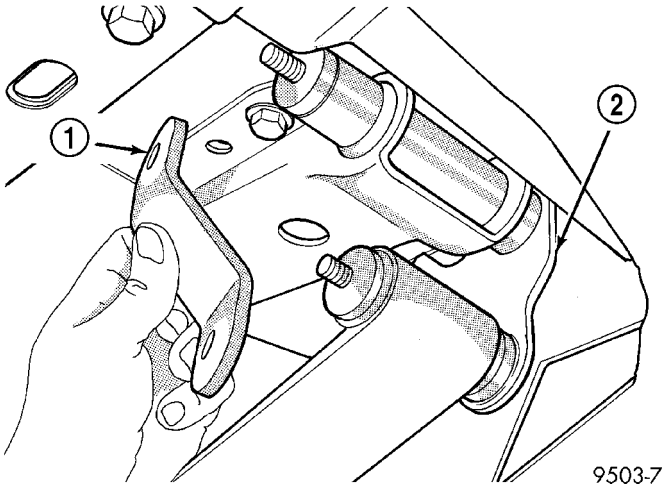

Fig. 35 Rear Spring Hanger/Shackle

1 - SHACKLE PLATE
2 - SPRING HANGER

(10) Remove the shackle plate from the hanger and remove the spring from the spring hanger (Fig. 35).

(11) Remove the leaf spring from the vehicle.

(12) Loosen and remove the pivot bolt from the front mount of the rear leaf spring. Remove mount.

INSTALLATION

(1) Assemble front spring mount to front of spring eye and install pivot bolt and nut. **Do not tighten at this time.**

CAUTION: Pivot bolt must face inboard to prevent structural damage during installation of spring.

(2) Raise front of spring and install four mounting bolts (Fig. 31). Tighten bolts to 61 N·m (45 ft. lbs.) torque.

(3) Install rear of spring onto rear spring shackle (Fig. 35). Install shackle plate and nuts. **Do not tighten at this time.**

(4) Verify lower leaf spring isolator is in position.

(5) Raise axle into correct position on leaf spring with axle centered under spring locator post (Fig. 36).

(6) Verify that the leaf spring isolator is correctly positioned in the spring plate.

(7) Install spring plate in position on the spring (Fig. 33).

(8) Install spring plate bolts (Fig. 33). Tighten bolts to 95 N·m (70 ft. lbs.) torque.

(9) Install lower shock absorber bolt. **Do not tighten at this time**.

(10) Remove jack under axle.

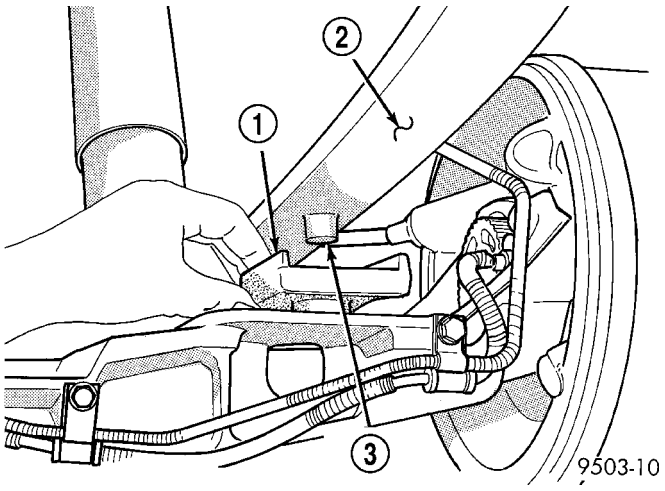

Fig. 36 Leaf Spring Locator Post

1 - LEAF SPRING ISOLATOR
2 - LEAF SPRING
3 - LOCATOR POST

(11) Lower the vehicle and remove hoist arms and block of wood from under vehicle.

(12) Tighten the spring front pivot bolt to 156 N·m (115 ft. lbs.) torque.

(13) Tighten rear spring shackle pin nuts to 61 N·m (45 ft. lbs.) torque.

(14) Tighten the lower shock absorber mounting bolt to 102 N·m (75 ft. lbs.) torque.

SPRING MOUNTS - FRONT

REMOVAL

(1) Raise vehicle on frame-contact hoist as follows:

(a) Position the hoist arm supporting the corner of the vehicle to be serviced against a block of wood placed on the body sill as shown (Fig. 37).

(b) Position the remaining hoist arms at each corner of the vehicle in the normal fashion. (Refer to LUBRICATION & MAINTENANCE/HOISTING - STANDARD PROCEDURE)

(c) Raise the vehicle to a comfortable working level.

(2) Position an under-hoist utility jack or transmission jack under rear axle toward the side needing bushing replacement. Jack pad should just contact axle.

(3) Remove shock absorber lower mounting bolt.

NOTE: If shock absorber bolt deflects upward during removal, raise axle by adjusting support jack. If shock absorber bolt deflects downward during removal, lower axle by adjusting support jack (or by pulling on axle).

SPRING MOUNTS - FRONT (Continued)

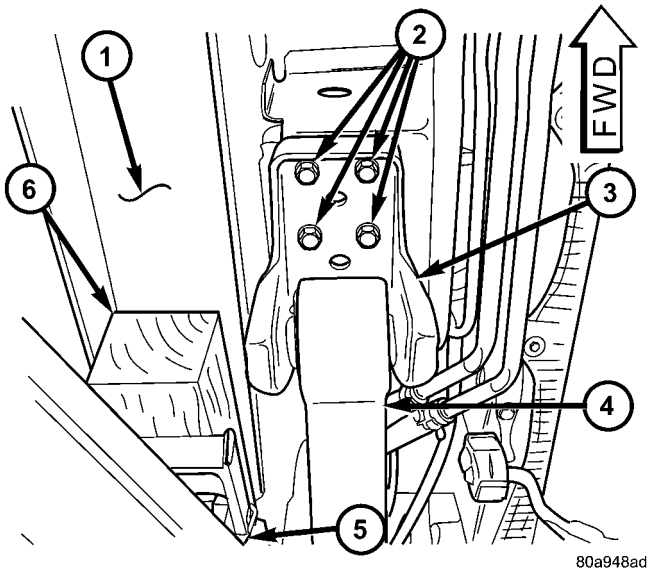

Fig. 37 LIFTING POINT AND SPRING MOUNT

1 - BODY SILL AREA
2 - MOUNTING BOLTS
3 - SPRING MOUNTING BRACKET
4 - LEAF SPRING
5 - HOIST LIFT ARM
6 - WOODEN BLOCK

(4) Remove four bolts securing leaf spring front mounting bracket to the body (Fig. 37).

(5) Using jack, **slowly** lower rear axle, permitting the forward end of rear spring to hang down. Lower it enough to allow access to spring pivot bolt. It may be necessary to place a wooden block between the spring and vehicle to hold forward end of the spring in place.

(6) Remove leaf spring forward pivot bolt, then remove mounting bracket.

INSTALLATION

(1) Position spring mounting bracket over spring eye and install pivot bolt through center of bushing from the **outboard** side.

NOTE: The pivot bolt must be installed from the outboard side to allow proper bracket to body mounting.

(2) Install the nut on the pivot bolt and lightly tighten. Do not fully tighten bolt at this time.

(3) Raise the under-hoist utility jack or transmission jack, guiding the forward mounting bracket into place against the body. It may help to use a drift punch placed through the hole centered between the mounting bolt holes in the bracket and the pilot hole in the body of the vehicle as a guide. When the four mounting bolt holes line up with their threads in the body, Install the mounting bolts (Fig. 37). Tighten the four mounting bolts to 61 N·m (45 ft. lbs.) torque.

(4) Raise or lower the jack until shock absorber lower eye aligns with threads in axle housing. Install shock absorber lower mounting bolt. Do not fully tighten bolt at this time.

(5) Lower the vehicle and remove hoist arms and block of wood from under vehicle.

(6) Tighten the spring front pivot bolt to 156 N·m (115 ft. lbs.) torque.

(7) Tighten the lower shock absorber mounting bolt to 88 N·m (65 ft. lbs.) torque.

SPRING MOUNTS - REAR

REMOVAL

(1) Remove the pin nuts securing the leaf spring rear shackle halves (Fig. 38) (Fig. 39).

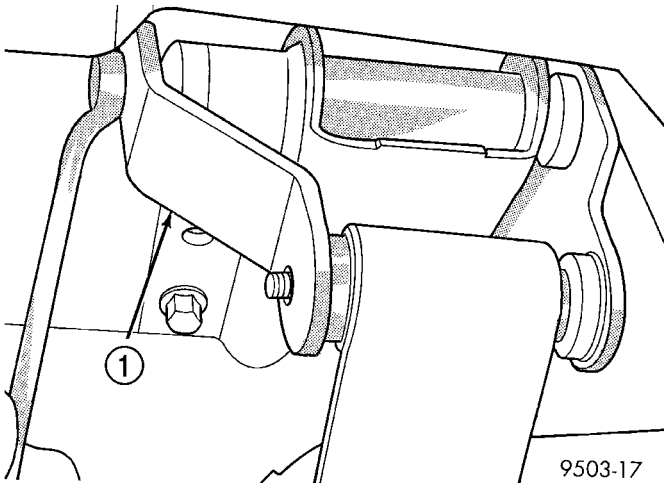

Fig. 38 Leaf Spring Shackle Nuts (FWD)

1 - SHACKLE PLATE

(2) Install a jack under the side of the axle having the leaf spring mount removed. Using the jack, support the weight of the axle and leaf spring.

(3) Remove the lower mounting bolt from the shock absorber.

(4) Remove the bolts attaching the leaf spring rear mount to the body of the vehicle (Fig. 40).

(5) Lower the jack and the rear of the leaf spring.

(6) AWD only – Remove the retaining bolts fastening inner to outer halves of the leaf spring shackle (Fig. 39).

(7) Remove the shackle from the leaf spring bushing and the spring rear mount.

INSTALLATION

(1) With the rear of the spring in the lowered position, install the spring shackle halves through the leaf spring bushings and rear mount (Fig. 39).

SPRING MOUNTS - REAR (Continued)

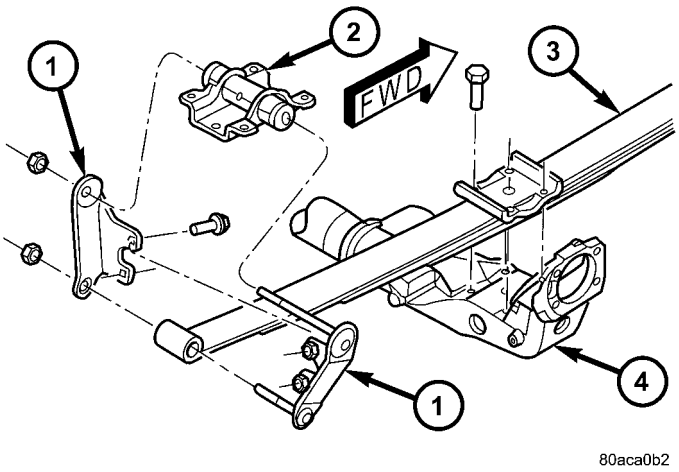

Fig. 39 All-Wheel-Drive Rear Suspension

1 - SHACKLE
2 - REAR MOUNT (HANGER)
3 - LEAF SPRING (MULTI-LEAF)
4 - AWD REAR AXLE

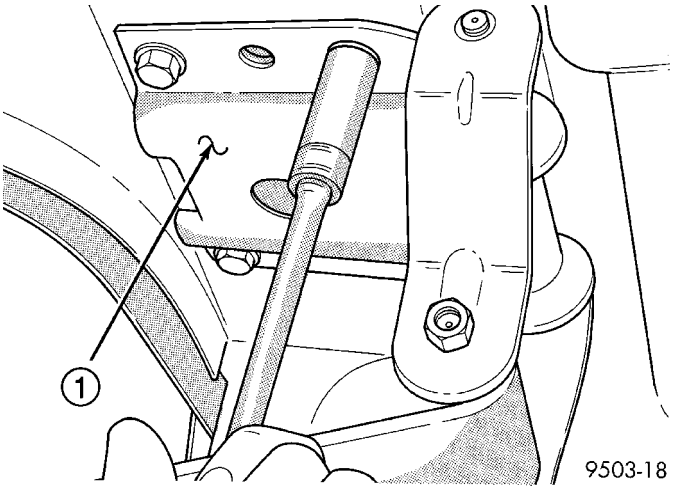

Fig. 40 Rear Spring Mount (Typical)

1 - LEAF SPRING MOUNT

(2) Install the shackle mounting nuts on the hanger pins, but DO NOT TIGHTEN AT THIS TIME.

(3) AWD only – Install, BUT DO NOT TIGHTEN, retaining bolts fastening inner to outer halves of leaf spring hanger at this time (Fig. 39).

(4) Using a jack, raise the leaf spring into mounted position.

(5) Install the rear spring mount-to-body bolts (Fig. 40). Tighten rear spring mount bolts to 61 N·m (45 ft. lbs.) torque.

(6) Install the lower mounting bolt fastening the shock absorber to the axle. DO NOT TIGHTEN THE BOLT AT THIS TIME.

(7) Remove the jack from under axle.

(8) Lower the vehicle so that the full weight of the vehicle is on all four tires (curb height).

CAUTION: AWD only – In order to avoid bending the spring shackles, the shackle pin nuts must be tightened to the specified torque before the inboard-to-outboard shackle half bolts can be tightened.

(9) Tighten shackle mounting nuts to 61 N·m (45 ft. lbs.) torque.

(10) If equipped with AWD, tighten shackle-to-shackle mounting bolts to 61 N·m (45 ft. lbs.) torque.

(11) Tighten shock absorber lower mounting bolt to 88 N·m (65 ft. lbs.) torque.

SPRING SHACKLE

REMOVAL

(Refer to 2 - SUSPENSION/REAR/SPRING MOUNTS - REMOVAL)

INSTALLATION

(Refer to 2 - SUSPENSION/REAR/SPRING MOUNTS - INSTALLATION)

STABILIZER BAR

DESCRIPTION

Some front-wheel-drive models use a stabilizer bar. It is mounted behind the rear axle. All-wheel-drive models use a stabilizer bar that is mounted in front of the rear axle.

The stabilizer bar interconnects both sides of the rear axle and attaches to the rear frame rails using 2 rubber isolated link arms.

Both type stabilizer bars have the same basic components. Attachment to the rear axle tube, and rear frame rails is through rubber-isolated bushings.

The 2 rubber isolated links are connected to the rear frame rails by brackets. These brackets are bolted to the bottom of the frame rails.

OPERATION

Jounce and rebound movements affecting one wheel are partially transmitted to the opposite wheel to reduce body roll.

REMOVAL

REMOVAL - AWD

(1) Raise vehicle. (Refer to LUBRICATION & MAINTENANCE/HOISTING - STANDARD PROCEDURE)

STABILIZER BAR (Continued)

(2) Remove the bolts securing the stabilizer bar to links on each end of the bar.

(3) While holding the stabilizer bar in place, remove the bolts that attach the stabilizer bar bushing retainers to the rear axle.

(4) Remove the stabilizer bar from the vehicle.

(5) If the links need to be serviced, remove the upper link arm to bracket bolt. Then remove link arm from frame rail attaching bracket.

REMOVAL - FWD

(1) Raise vehicle. See Hoisting in Lubrication and Maintenance.

(2) Remove the bolts securing the stabilizer bar to links on each side of bar.

(3) While holding the stabilizer bar in place, remove the bolts that attach the stabilizer bar bushing retainers to the rear axle.

(4) Remove the stabilizer bar from the vehicle.

REMOVAL - FWD - FOLD-IN-FLOOR SEATING

(1) Raise and support vehicle. (Refer to LUBRICATION & MAINTENANCE/HOISTING - STANDARD PROCEDURE)

(2) At each end of the stabilizer bar, remove the nuts and bolts securing the bar to the links (Fig. 41).

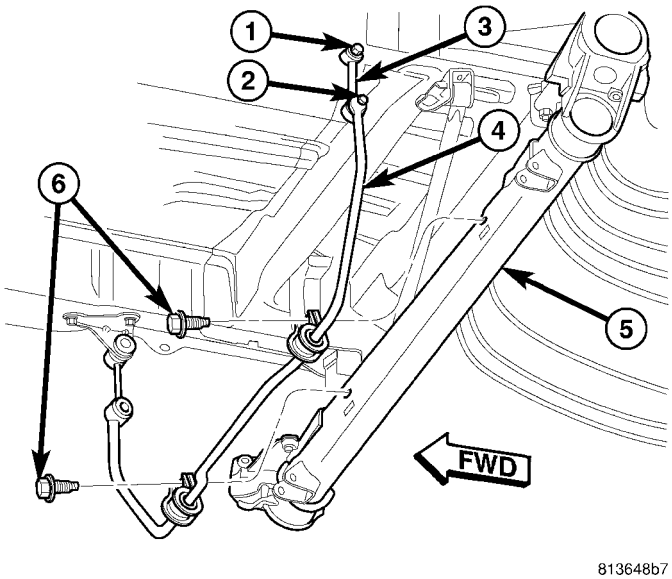

Fig. 41 Stabilizer Bar With Fold-In-Floor Seating

1 - LINK NUT
2 - LINK BOLT AND NUT
3 - STABILIZER LINK
4 - STABILIZER BAR
5 - REAR AXLE
6 - BOLTS

(3) While holding the stabilizer bar in place, remove the bolts that attach the stabilizer bar bushing retainers to the rear axle (Fig. 41).

(4) Remove the stabilizer bar from the vehicle.

INSTALLATION

INSTALLATION - AWD

(1) Install the stabilizer bar on the rear axle.

(2) Install bushing retainer bolts. Do not tighten at this time.

(3) Install bolts connecting links to stabilizer bar. Do not tighten at this time.

(4) Lower the vehicle so that the full weight of the vehicle is on all four tires. With the vehicle at its curb height, tighten the following bolts to the torques listed:

- Stabilizer bar bushing retainer-to-axle bracket bolts — 61 N·m (45 ft. lbs.)
- Stabilizer bar-to-link bolts — 61 N·m (45 ft. lbs.)

INSTALLATION - FWD

(1) Lift the stabilizer bar onto the rear axle and install the two retainer mounting bolts. DO NOT TIGHTEN.

(2) Install the bolts attaching the stabilizer bar links to the stabilizer bar. DO NOT TIGHTEN.

(3) Lower the vehicle so that the full weight of the vehicle is on all four tires. With the vehicle at its curb height, tighten the following bolts to the torques listed:

- Stabilizer bar bushing retainer-to-axle bracket bolts — 61 N·m (45 ft. lbs.)
- Stabilizer bar-to-link — 61 N·m (45 ft. lbs.)

INSTALLATION - FWD - FOLD-IN-FLOOR SEATING

(1) Lift the stabilizer bar onto the rear axle, hooking the bottom of the bushing retainers on the axle, then install the two retainer mounting bolts (Fig. 41). DO NOT TIGHTEN AT THIS TIME.

(2) Install the bolts and nuts attaching the stabilizer bar links to the stabilizer bar (Fig. 41). DO NOT TIGHTEN AT THIS TIME.

(3) Lower the vehicle so that the full weight of the vehicle is on all four tires. With the vehicle at its curb height, tighten the following bolts to the torques listed:

- Stabilizer bar bushing retainer-to-axle bracket bolts — 61 N·m (45 ft. lbs.)
- Stabilizer bar-to-link — 61 N·m (45 ft. lbs.)

TRACK BAR

DESCRIPTION

On front-wheel-drive applications of this vehicle that are equipped with single leaf rear springs, a track bar is used on the rear axle (Fig. 1).

The track bar connects the rear axle to the frame/body of the vehicle. The track bar is isolated from the

TRACK BAR (Continued)

body of the vehicle by an isolator bushing located in each end of the track bar.

OPERATION

The track bar prevents excessive side-to-side movement of the rear axle. The track bar is used to keep the location of the axle in the correct position for optimum handling and control of the vehicle.

REMOVAL

(1) Remove the nut and bolt mounting the track bar to the rear axle (Fig. 42).

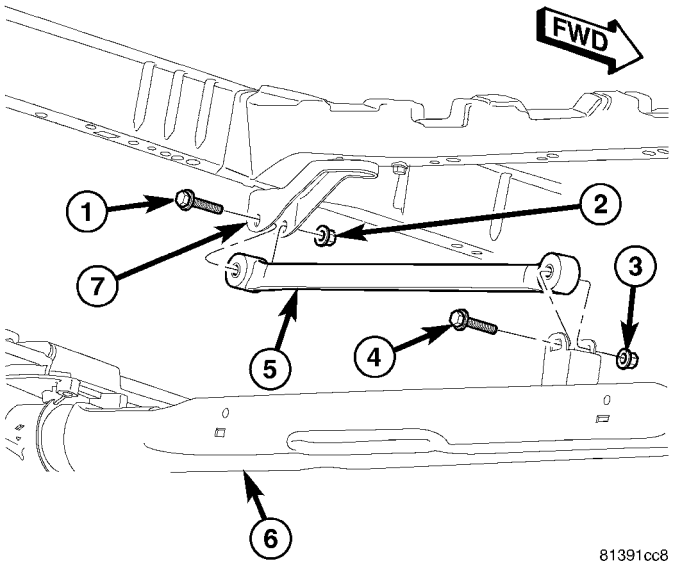

Fig. 42 Track Bar Mounting

1 - MOUNTING BOLT
2 - NUT
3 - NUT
4 - MOUNTING BOLT
5 - TRACK BAR
6 - REAR AXLE
7 - FRAME MOUNTED BRACKET

(2) Remove the nut and bolt attaching the track bar to the track bracket on the body of the vehicle (Fig. 42). Remove the track bar.

INSTALLATION

(1) Install the track bar first into the body bracket for the track bar (Fig. 42). Install the track bar mounting bolt in the direction shown, then install the nut. **Do not tighten at this time.**

(2) Install the track bar into its mounting bracket on the rear axle (Fig. 42). Install the track bar mounting bolt in the direction shown, then install the nut. **Do not tighten at this time.**

(3) Lower the vehicle to the ground until the full weight of the vehicle is supported by the wheels. Tighten both track bar mounting bolts to 95 N·m (70 ft. lbs.) torque.

WHEEL ALIGNMENT

TABLE OF CONTENTS

page

WHEEL ALIGNMENT
DESCRIPTION - WHEEL ALIGNMENT 47
DIAGNOSIS AND TESTING - SUSPENSION AND STEERING 50
STANDARD PROCEDURE
STANDARD PROCEDURE - WHEEL ALIGNMENT 52
STANDARD PROCEDURE - CURB HEIGHT MEASUREMENT 55
SPECIFICATIONS
WHEEL ALIGNMENT 56

WHEEL ALIGNMENT

DESCRIPTION - WHEEL ALIGNMENT

Vehicle wheel alignment is the positioning of all interrelated front and rear suspension angles. These angles affect the handling and steering of the vehicle when it is in motion. Proper wheel alignment is essential for efficient steering, good directional stability, and proper tire wear.

The method of checking a vehicle's front and rear wheel alignment varies depending on the manufacturer and type of equipment used. The manufacturer's instructions should always be followed to ensure accuracy of the alignment, except when DaimlerChrysler Corporation's wheel alignment specifications differ.

On this vehicle, the suspension angles that can be adjusted are as follows:

- Front Camber (with camber bolt package and standard procedure)
- Front Toe

Check the wheel alignment and make all wheel alignment adjustments with the vehicle standing at its proper curb height specification. Curb height is the normal riding height of the vehicle. It is measured from a certain point on the vehicle to the ground or a designated area while the vehicle is sitting on a flat, level surface. Refer to Curb Height Measurement in this section for additional information.

Typical wheel alignment angles and measurements are described in the following paragraphs.

CAMBER

Camber is the inward or outward tilt of the top of the tire and wheel assembly (Fig. 1). Camber is measured in degrees of angle relative to a true vertical line. Camber is a tire wearing angle.

- Excessive negative camber will cause tread wear at the inside of the tire.
- Excessive positive camber will cause tread wear on the outside of the tire.

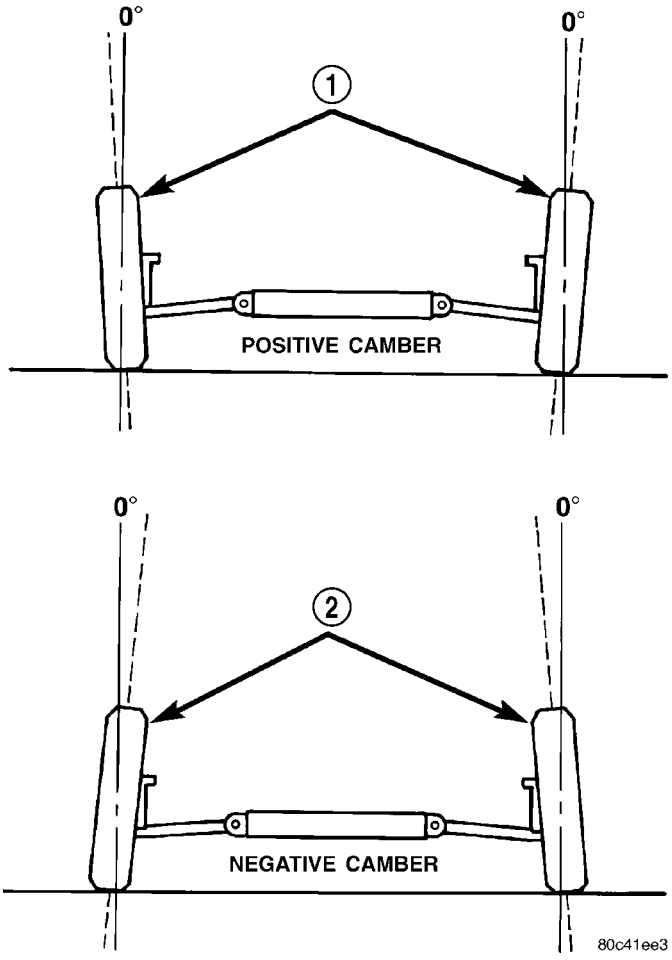

Fig. 1 Camber

1 - WHEELS TILTED OUT AT TOP
2 - WHEELS TILTED IN AT TOP

WHEEL ALIGNMENT (Continued)

CROSS CAMBER

Cross camber is the difference between left and right camber. To achieve the cross camber reading, subtract the right side camber reading from the left. For example, if the left camber is +0.3° and the right camber is 0.0°, the cross camber would be +0.3°.

CASTER

Caster is the forward or rearward tilt of the steering knuckle in reference to the position of the upper and lower ball joints. Caster is measured in degrees of angle relative to a true vertical center line. This line is viewed from the side of the tire and wheel assembly (Fig. 2).

- Forward tilt (upper ball joint ahead of lower) results in a negative caster angle.
- Rearward tilt (upper ball joint trailing lower) results in a positive caster angle.

Although caster does not affect tire wear, a caster imbalance between the two front wheels may cause the vehicle to lead to the side with the least positive caster.

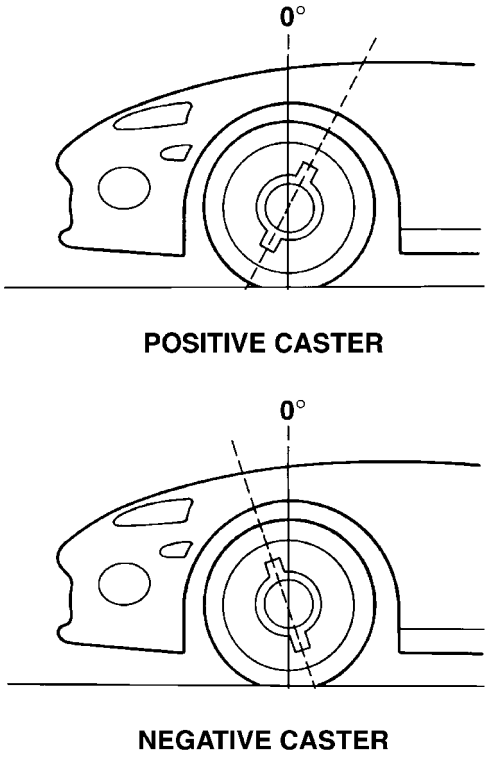

Fig. 2 Caster

CROSS CASTER

Cross caster is the difference between left and right caster.

TOE

Toe is the inward or outward angle of the wheels as viewed from above the vehicle (Fig. 3).

- Toe-in is produced when the front edges of the wheels on the same axle are closer together than the rear edges.
- Toe-out is produced when the front edges of the wheels on the same axle are farther apart than the rear edges.

Toe-in and toe-out can occur at the front wheels and the rear wheels.

Toe is measured in degrees or inches. The measurement identifies the amount that the front of the wheels point inward (toe-in) or outward (toe-out). Toe is measured at the spindle height. Zero toe means the front and rear edges of the wheels on the same axle are equally distant.

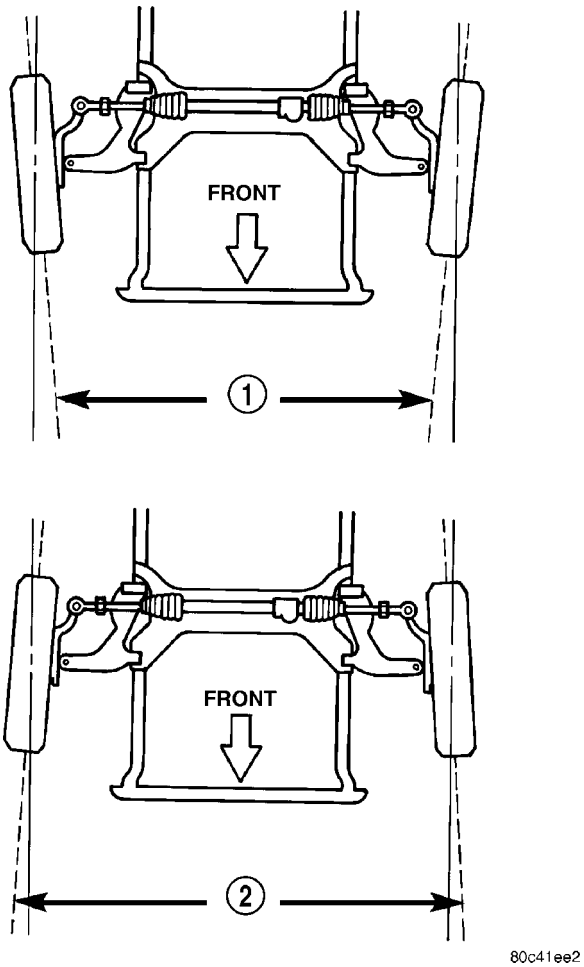

Fig. 3 Toe

1 - TOE-IN
2 - TOE-OUT

WHEEL ALIGNMENT (Continued)

TOE-OUT ON TURNS

Toe-out on turns is the relative positioning of the front wheels while steering through a turn (Fig. 4). This compensates for each front wheel's turning radius. As the vehicle encounters a turn, the outboard wheel must travel in a larger radius circle than the inboard wheel. The steering system is designed to make each wheel follow its particular radius circle. To accomplish this, the front wheels must progressively toe outward as the steering is turned from center. This eliminates tire scrubbing and undue tire wear when steering a vehicle through a turn.

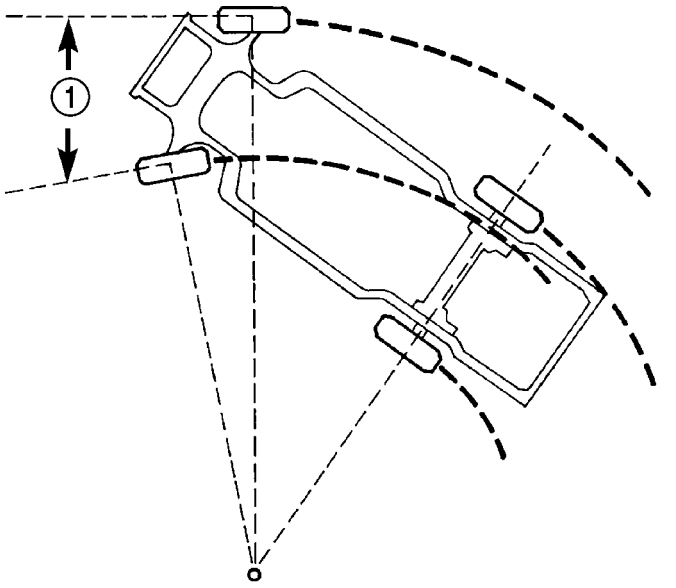

Fig. 4 Toe-Out On Turns

1 - TOE-OUT ON TURNS

DYNAMIC TOE PATTERN

Dynamic toe pattern is the inward and outward toe movement of the front and rear tires through the suspension's jounce and rebound travel. As the vehicle's suspension moves up and down, the toe pattern varies. Toe pattern is critical in controlling the directional stability of the vehicle while in motion. Front and rear dynamic toe pattern is preset by the factory at the time the vehicle is assembled.

It is not necessary to check or adjust front or rear dynamic toe pattern when doing a normal wheel alignment. The only time dynamic toe pattern needs to be checked or adjusted is if the frame of the vehicle has been damaged.

STEERING AXIS INCLINATION (S. A. I.)

Steering axis inclination is the angle between a true vertical line starting at the center of the tire at the road contact point and a line drawn through the center of the upper ball joint (or strut) and the lower ball joint (Fig. 5). S.A.I. is built into the vehicle and is not an adjustable angle. If S.A.I. is not within specifications, a bent or damaged suspension component may be the cause.

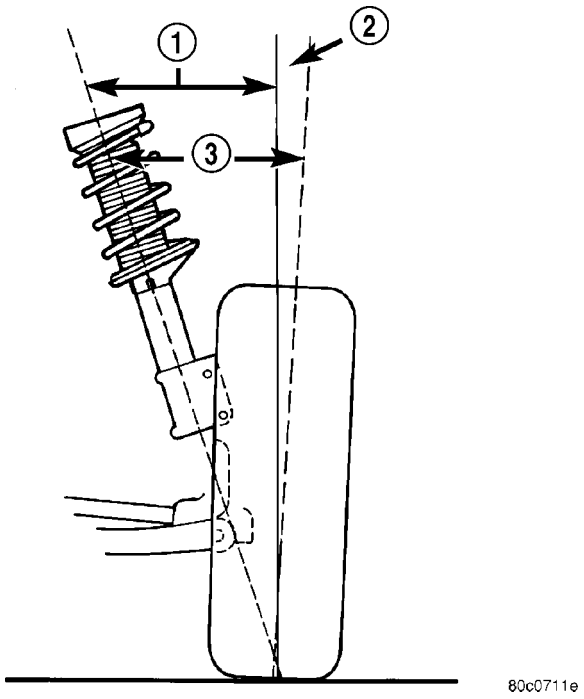

Fig. 5 S.A.I. and I.A.

1 - S.A.I.
2 - CAMBER
3 - I.A.

INCLUDED ANGLE (I. A.)

Included angle is the sum of the S.A.I. angle plus or minus the camber angle, depending on whether or not the wheel has positive or negative camber (Fig. 5). If camber is positive, add the camber angle to the S.A.I. angle. If camber is negative, subtract the camber angle from the S.A.I. angle. Included angle is not adjustable, but can be used to diagnose a frame misalignment or bent suspension component (spindle, strut).

WHEEL ALIGNMENT (Continued)

THRUST ANGLE

Thrust angle is the averaged direction the rear wheels are pointing in relation to the vehicle's center line (Fig. 6). The presence of negative or positive thrust angle causes the rear tires to track improperly to the left or right of the front tires (dog tracking).

- Negative thrust angle means the rear tires are tracking to the left of the front tires.
- Positive thrust angle means the rear tires are tracking to the right of the front tires.

Improper tracking can cause undue tire wear, a lead or pull and a crooked steering wheel. Excessive thrust angle can usually be corrected by adjusting the rear wheel toe so that each wheel has one-half of the total toe measurement.

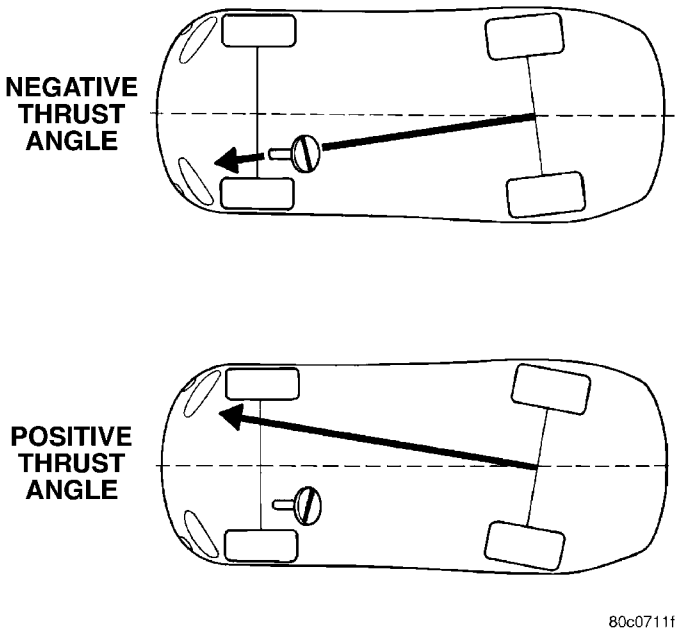

Fig. 6 Thrust Angle

DIAGNOSIS AND TESTING - SUSPENSION AND STEERING

CONDITION	POSSIBLE CAUSES	CORRECTION
Front End Whine On Turns	1. Defective wheel bearing	1. Replace wheel bearing
	2. Incorrect wheel alignment	2. Check and reset wheel alignment
	3. Worn tires	3. Replace tires
Front End Growl Or Grinding On Turns	1. Defective wheel bearing	1. Replace wheel bearing
	2. Engine mount grounding	2. Check for motor mount hitting frame rail and reposition engine as required
	3. Worn or broken C/V joint	3. Replace C/V joint
	4. Loose wheel lug nuts	4. Verify wheel lug nut torque
	5. Incorrect wheel alignment	5. Check and reset wheel alignment
	6. Worn tires	6. Replace tires
	7. Front strut pin in upper strut mount	7. Replace the front strut upper mount and bearing

WHEEL ALIGNMENT (Continued)

CONDITION	POSSIBLE CAUSES	CORRECTION
Front End Clunk Or Snap On Turns	1. Loose lug nuts	1. Verify wheel lug nut torque
	2. Worn or broken C/V joint	2. Replace C/V joint
	3. Worn or loose tie rod	3. Tighten or replace tie rod end
	4. Worn or loose ball joint	4. Tighten or replace ball joint
	5. Worn/loose control arm bushing	5. Replace control arm bushing
	6. Loose stabilizer bar.	6. Tighten stabilizer bar to specified torque
	7. Loose strut mount to body attachment	7. Tighten strut attachment to specified torque
	8. Loose crossmember bolts	8. Tighten crossmember bolts to specified torque
Front End Whine With Vehicle Going Straight At A Constant Speed	1. Defective wheel bearing	1. Replace wheel bearing
	2. Incorrect wheel alignment	2. Check and reset wheel alignment
	3. Worn tires	3. Replace tires
	4. Worn or defective transaxle gears or bearings	4. Replace transaxle gears or bearings
Front End Growl Or Grinding With Vehicle Going Straight At A Constant Speed	1. Engine mount grounding	1. Reposition engine as required
	2. Worn or broken C/V joint	2. Replace C/V joint
Front End Whine When Accelerating Or Decelerating	1. Worn or defective transaxle gears or bearings	1. Replace transaxle gears or bearings
Front End Clunk When Accelerating Or Decelerating	1. Worn or broken engine mount	1. Replace engine mount
	2. Worn or defective transaxle gears or bearings	2. Replace transaxle gears or bearings
	3. Loose lug nuts	3. Verify wheel lug nut torque
	4. Worn or broken C/V joint	4. Replace C/V joint
	5. Worn or loose ball joint	5. Tighten or replace ball joint
	6. Worn or loose control arm bushing	6. Replace control arm bushing
	7. Loose crossmember bolts	7. Tighten crossmember bolts to specified torque
	8. Worn tie rod end	8. Replace tie rod end
Road Wander	1. Incorrect tire pressure	1. Inflate tires to recommended pressure
	2. Incorrect front or rear wheel toe	2. Check and reset wheel toe
	3. Worn wheel bearings	3. Replace wheel bearing
	4. Worn control arm bushings	4. Replace control arm bushing
	5. Excessive friction in steering gear	5. Replace steering gear
	6. Excessive friction in steering shaft coupling	6. Replace steering coupler
	7. Excessive friction in strut upper bearing	7. Replace strut bearing

WHEEL ALIGNMENT (Continued)

CONDITION	POSSIBLE CAUSES	CORRECTION
Lateral Pull	1. Unequal tire pressure	1. Inflate all tires to recommended pressure
	2. Radial tire lead	2. Perform lead correction procedure
	3. Incorrect front wheel camber	3. Check and reset front wheel camber
	4. Power steering gear imbalance	4. Replace power steering gear
	5. Wheel braking	5. Correct braking condition causing lateral pull
Excessive Steering Free Play	1. Incorrect Steering Gear Adjustment	1. Adjust Or Replace Steering Gear
	2. Worn or loose tie rod ends	2. Replace or tighten tie rod ends
	3. Loose steering gear mounting bolts	3. Tighten steering gear bolts to specified torque
	4. Loose or worn steering shaft coupler	4. Replace steering shaft coupler
Excessive Steering Effort	1. Low tire pressure	1. Inflate all tires to recommended pressure
	2. Lack of lubricant in steering gear	2. Replace steering gear
	3. Low power steering fluid level	3. Fill power steering fluid reservoir to correct level
	4. Loose power steering pump drive belt	4. Correctly adjust power steering pump drive belt
	5. Lack of lubricant in ball joints	5. Lubricate or replace ball joints
	6. Steering gear malfunction	6. Replace steering gear
	7. Lack of lubricant in steering coupler	7. Replace steering coupler

STANDARD PROCEDURE

STANDARD PROCEDURE - WHEEL ALIGNMENT

PRE-WHEEL ALIGNMENT INSPECTION

Before any attempt is made to change or correct the wheel alignment, the following inspection and necessary corrections must be made to ensure proper alignment.

(1) Verify that the fuel tank is full of fuel. If the tank is not full, the reduction in weight will affect the curb height of the vehicle and the alignment angles.

(2) The passenger and luggage compartments of the vehicle should be free of any load that is not factory equipment.

(3) Check the tires on the vehicle. All tires must be the same size and in good condition with approximately the same amount of tread wear. Inflate all the tires to the recommended air pressure.

(4) Check the front wheel and tire assemblies for excessive radial runout.

(5) Inspect lower ball joints and all steering linkage for looseness, binding, wear or damage. Repair as necessary.

(6) Check suspension fasteners for proper torque and retighten as necessary.

(7) Inspect all suspension component rubber bushings for signs of wear or deterioration. Replace any faulty bushings or components before aligning the vehicle.

(8) Check the vehicle's curb height to verify it is within specifications. Refer to Curb Height Measurement.

WHEEL ALIGNMENT SETUP

(1) Position the vehicle on an alignment rack.

(2) Install all required alignment equipment on the vehicle per the alignment equipment manufacturer's instructions. On this vehicle, a four-wheel alignment is recommended.

WHEEL ALIGNMENT (Continued)

NOTE: Prior to reading the vehicle's alignment readouts, the front and rear of vehicle should be jounced. Induce jounce (rear first, then front) by grasping the center of the bumper and jouncing each end of vehicle an equal number of times. The bumper should always be released when vehicle is at the bottom of the jounce cycle.

(3) Read the vehicle's current front and rear alignment settings. Compare the vehicle's current alignment settings to the vehicle specifications for camber, caster and toe-in. (Refer to 2 - SUSPENSION/ WHEEL ALIGNMENT - SPECIFICATIONS)

(4) If front camber and caster are not within specifications, proceed to CAMBER AND CASTER below. If caster and camber are within specifications, proceed to TOE which can be found following CAMBER AND CASTER. Rear camber, caster and toe are not adjustable. If found not to be within specifications, reinspect for damaged suspension or body components and replace as necessary.

CAMBER AND CASTER

Camber and caster settings on this vehicle are determined at the time the vehicle is designed, by the location of the vehicle's suspension components. This is referred to as NET BUILD. The result is no required adjustment of camber and caster after the vehicle is built or when servicing the suspension components. Thus, when performing a wheel alignment, caster and camber are not normally considered adjustable angles. Camber and caster should be checked to ensure they meet vehicle specifications.

If front camber is found not to meet alignment specifications, it can be adjusted using an available camber adjustment bolt package. Before installing a camber adjustment bolt package on a vehicle found to be outside the specifications, inspect the suspension components for any signs of damage or bending.

CAUTION: Do not attempt to adjust the vehicles wheel alignment by heating, bending or by performing any other modification to the vehicle's front suspension components or body.

If camber readings are not within specifications, use the following procedure to install the front camber adjustment bolt package and then adjust front camber.

CAMBER ADJUSTMENT BOLT PACKAGE INSTALLATION

The camber adjustment bolt package contains 2 flange bolts, 2 cam bolts, 2 dog bone washers, and 4 nuts. This package services both sides of the vehicle. Use the package to attach the strut clevis bracket to the steering knuckle after the strut clevis bracket has been modified. To install and adjust the camber adjustment bolt package, follow the procedure below.

(1) Raise the vehicle until its tires are not supporting the weight of the vehicle.

(2) Remove the front tire and wheel assemblies.

CAUTION: When removing the steering knuckle from the strut clevis bracket, do not put a strain on the brake flex hose. Also, do not let the weight of the steering knuckle assembly be supported by the brake flex hose when removed from the strut assembly. If necessary use a wire hanger to support the steering knuckle assembly or if required remove the brake flex hose from the caliper assembly.

CAUTION: The knuckle to strut assembly attaching bolt shanks are serrated and must not be turned during removal. Remove the nuts while holding the bolts stationary.

(3) Remove the top and bottom, strut clevis bracket to steering knuckle attaching bolts (Fig. 7)and discard. Separate the steering knuckle from the strut clevis bracket and position steering knuckle so it is out of the way of the strut.

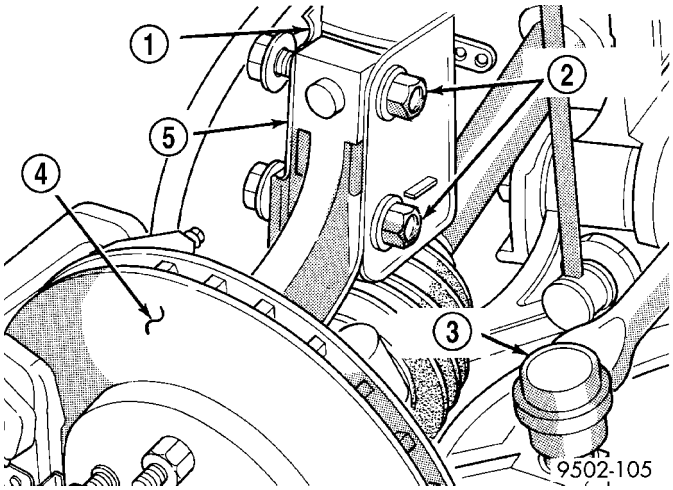

Fig. 7 Clevis Bracket To Steering Knuckle Attaching Bolts

1 - STRUT CLEVIS BRACKET
2 - ATTACHING BOLTS
3 - TIE ROD END
4 - ROTOR
5 - STEERING KNUCKLE

CAUTION: When slotting the bottom mounting hole on the strut clevis bracket, do not enlarge the hole beyond the indentations on the sides of the strut clevis bracket (Fig. 8).

WHEEL ALIGNMENT (Continued)

(4) Using an appropriate grinder and grinding wheel, slot the bottom hole in both sides of the strut clevis bracket (Fig. 8).

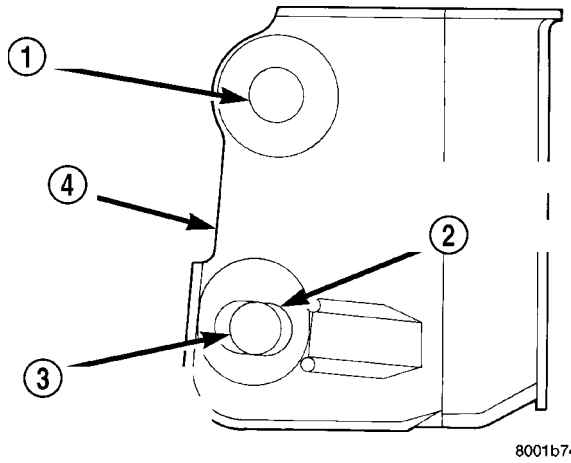

Fig. 8 Strut Clevis Bracket Bolt Hole Grinding Area

1 - UPPER STRUT TO STEERING KNUCKLE ATTACHING HOLE
2 - CAMBER ADJUSTMENT SLOT INDENTATION AREA ON CLEVIS BRACKET
3 - LOWER STRUT TO STEERING KNUCKLE ATTACHING HOLE
4 - STRUT CLEVIS BRACKET

CAUTION: After slotting the strut clevis bracket hole, do not install the original attaching bolts when assembling the steering knuckle to the strut assembly. Only the flange bolts, cam bolts, and dog bone washers from the service package must be used to attach the steering knuckle to the strut after the mounting hole is slotted.

NOTE: The strut clevis-to-knuckle bolts are installed differently on each side of the vehicle. Left-hand-side bolts are installed from vehicle rear to front (Fig. 9). Right-hand-side bolts are installed from vehicle front to rear.

(5) Position the knuckle back into the strut clevis bracket. Using the direction indicated in the above note, install a flanged bolt from the service package into the upper mounting hole. Using the direction indicated in the above note, install a cam bolt into the bottom mounting hole (Fig. 9).

(6) Install a dog bone washer on the steering knuckle to strut clevis bracket attaching bolts, then install the nuts onto the bolts from the service package (Fig. 10). Tighten the bolts just enough to hold the steering knuckle in position when adjusting camber, while still allowing the steering knuckle to move in clevis bracket.

(7) Repeat the procedure to the other side strut clevis bracket.

(8) Reinstall both front tire and wheel assemblies and tighten to specifications.

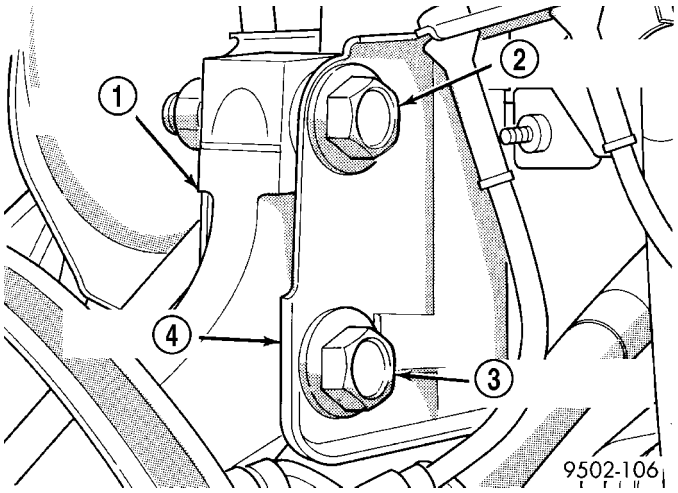

Fig. 9 Package Bolts Correctly Installed

1 - STEERING KNUCKLE
2 - FLANGED BOLT IN TOP HOLE
3 - CAM BOLT IN BOTTOM HOLE
4 - STRUT CLEVIS BRACKET

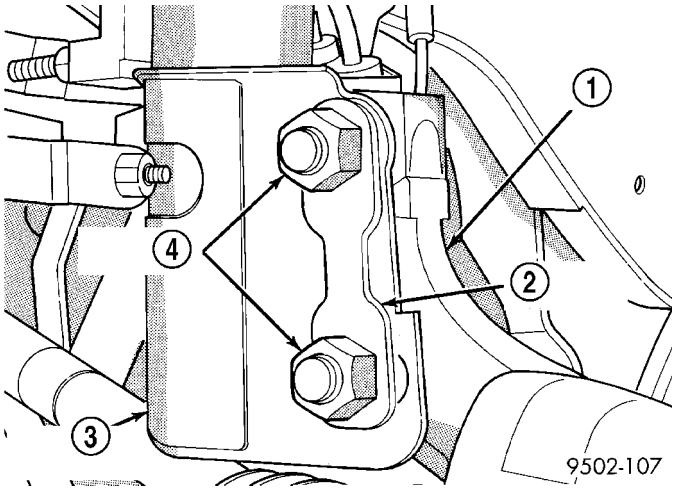

Fig. 10 Dog Bone Washer And Nuts Installed

1 - STEERING KNUCKLE
2 - DOG BONE WASHER
3 - STRUT CLEVIS BRACKET
4 - ATTACHING NUTS

(9) Lower the vehicle. Jounce the front and rear of vehicle an equal amount of times.

(10) Adjust the front camber to the preferred setting by rotating the lower eccentric cam bolt against the cam stop areas on the strut clevis bracket (Fig. 11). When camber is set, tighten the upper strut clevis bracket bolt and lower cam bolt. Again jounce front and rear of vehicle an equal amount of times and verify front camber setting. Torque both front strut to steering knuckle attaching bolts to 81 N·m (60 ft. lbs.) plus an additional 1/4 (90°) turn after the required torque is met.

WHEEL ALIGNMENT (Continued)

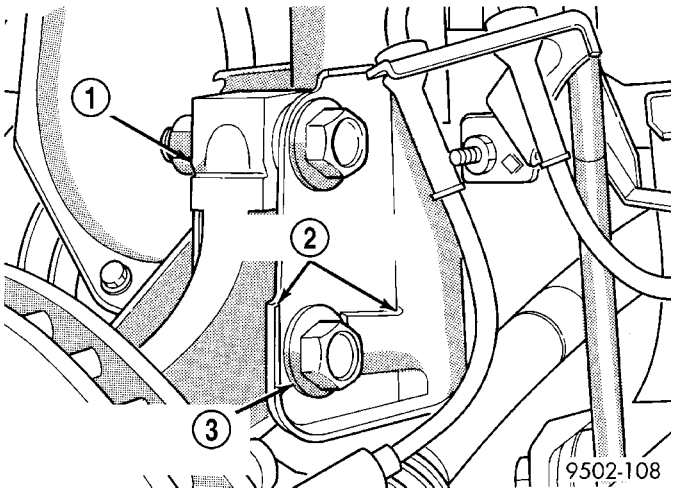

Fig. 11 Camber Adjustment Cam Bolt

1 - STEERING KNUCKLE
2 - CLEVIS BRACKET CAM STOP AREAS
3 - LOWER ECCENTRIC CAMBER ADJUSTMENT BOLT

(11) If toe readings obtained are not within the required specification range, adjust toe to meet the preferred specification setting. Toe is adjustable using the following procedure.

TOE

(1) Center the steering wheel and lock in place using a steering wheel clamp.

CAUTION: Do not twist front inner tie rod to steering gear rubber boots during front wheel Toe adjustment.

(2) Loosen front inner to outer tie rod end jam nuts (Fig. 12). Grasp inner tie rods at serrations and rotate inner tie rods of steering gear (Fig. 12) to set front toe to the preferred toe specification. (Refer to 2 - SUSPENSION/WHEEL ALIGNMENT - SPECIFICATIONS)

(3) Tighten tie rod jam nuts (Fig. 12) to 75 N·m (55 ft. lbs.) torque.

(4) Adjust steering gear to tie rod boots at the inner tie rod.

(5) Remove steering wheel clamp.

(6) Remove the alignment equipment.

(7) Road test the vehicle to verify the steering wheel is straight and the vehicle does not wander or pull.

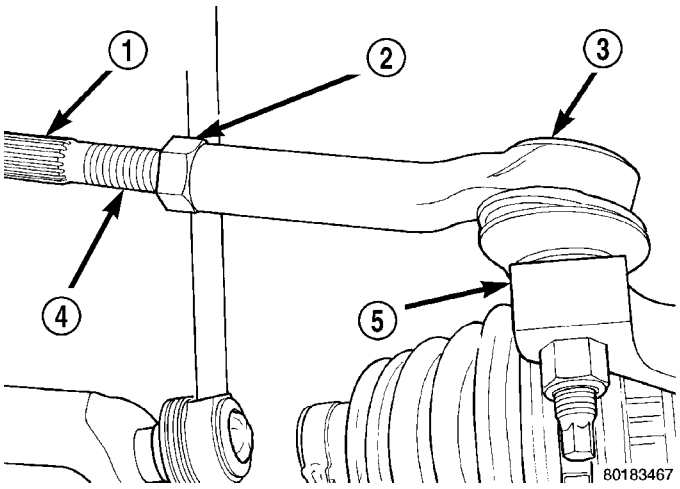

Fig. 12 Front Wheel Toe Adjustment

1 - INNER TIE ROD SERRATION
2 - OUTER TIE ROD JAM NUT
3 - OUTER TIE ROD END
4 - INNER TIE ROD
5 - STEERING KNUCKLE

STANDARD PROCEDURE - CURB HEIGHT MEASUREMENT

The wheel alignment is to be checked and all alignment adjustments made with the vehicle at its required curb height specification.

Vehicle height is to be checked with the vehicle on a flat, level surface, preferably a vehicle alignment rack. The tires are to be inflated to the recommended pressure. All tires are to be the same size as standard equipment. Vehicle height is checked with the fuel tank full of fuel, and no passenger or luggage compartment load.

Vehicle height is not adjustable. If the measurement is not within specifications, inspect the vehicle for bent or weak suspension components. Compare the parts tag on the suspect coil spring(s) to the parts book and the vehicle sales code, checking for a match. Once removed from the vehicle, compare the coil spring height to a correct new or known good coil spring. The heights should vary if the suspect spring is weak.

(1) Measure from the inboard edge of the wheel opening fender lip directly above the wheel center (spindle), to the floor or alignment rack surface.

(2) When measuring, the maximum left-to-right differential is not to exceed 12.5 mm (0.5 in.).

(3) Compare the measurements to the specifications listed in the following Curb Height Specifications charts.

WHEEL ALIGNMENT (Continued)

CURB HEIGHT SPECIFICATIONS

VEHICLE	FRONT	REAR
CARGO VAN	755 mm ± 11 mm 29.72 in. ± 0.43 in	795 mm ± 11 mm 31.30 in. ± 0.43 in.
ALL OTHERS	755 mm ± 11 mm 29.72 in. ± 0.43 in	770 mm ± 11 mm 30.31 in. ± 0.43 in.

SPECIFICATIONS

WHEEL ALIGNMENT

NOTE: All wheel alignments are to be set at curb height. (Refer to 2 - SUSPENSION/WHEEL ALIGNMENT - STANDARD PROCEDURE)

NOTE: All specifications are given in degrees.

FRONT WHEEL ALIGNMENT	PREFERRED SETTING	ACCEPTABLE RANGE
CAMBER	+0.10°	-0.30° to +0.50°
Cross-Camber (Maximum side-to-side difference)	0.0°	0.50°
CASTER*	+2.31°	+1.31° to +3.31°
Cross-Caster (Maximum side-to-side difference)	0.0°	1.00°
TOTAL TOE**	+0.10°	−0.10° to +0.30°
Maximum side-to-side difference	0.0°	0.06°
REAR WHEEL ALIGNMENT	**PREFERRED SETTING**	**ACCEPTABLE RANGE**
CAMBER*	0.0°	-0.25° to +0.25°
TOTAL TOE* **	0.0°	−0.20° to +0.20°
THRUST ANGLE*	0.0°	-0.30° to +0.30°

Notes:

* For reference only. These are non-adjustable angles.

** TOTAL TOE is the sum of both left and right wheel toe settings. TOTAL TOE must be equally split between each front wheel to ensure the steering wheel is centered after setting toe. Positive toe is toe-in and negative toe is toe-out

DIFFERENTIAL & DRIVELINE

HALF SHAFT - FRONT

TABLE OF CONTENTS

page

HALF SHAFT - FRONT
DESCRIPTION 1
DIAGNOSIS AND TESTING - HALF SHAFT 1
REMOVAL 2
INSTALLATION 4
SPECIFICATIONS - HALF SHAFT - FRONT 6

page

CV BOOT - INNER
REMOVAL 6
INSTALLATION 7
CV BOOT - OUTER
REMOVAL 10
INSTALLATION 11

HALF SHAFT - FRONT

DESCRIPTION

All vehicles use an unequal length half shaft system (Fig. 1).

The left half shaft uses a tuned rubber damper weight. When replacing the left half shaft, be sure the replacement half shaft has the same damper weight as the original.

All half shaft assemblies use the same type of inner and outer joints. The inner joint of both half shaft assemblies is a tripod joint, and the outer joint of both half shaft assemblies is a Rzeppa joint. Both tripod joints and Rzeppa joints are true constant velocity (CV) joint assemblies. The inner tripod joint allows for the changes in half shaft length through the jounce and rebound travel of the front suspension.

On vehicles equipped with ABS brakes, the outer CV joint is equipped with a tone wheel used to determine vehicle speed for ABS brake operation.

The inner tripod joint of both half shafts is splined into the transaxle side gears. The inner tripod joints are retained in the side gears of the transaxle using a snap ring located in the stub shaft of the tripod joint. The outer CV joint has a stub shaft that is splined into the wheel hub and retained by a steel hub nut.

DIAGNOSIS AND TESTING - HALF SHAFT

VEHICLE INSPECTION

(1) Check for grease in the vicinity of the inboard tripod joint and outboard CV joint; this is a sign of inner or outer joint seal boot or seal boot clamp damage.

NOISE AND/OR VIBRATION IN TURNS

A clicking noise and/or a vibration in turns could be caused by one of the following conditions:

- Damaged outer CV or inner tripod joint seal boot or seal boot clamps. This will result in the loss and/or contamination of the joint grease, resulting in inadequate lubrication of the joint.
- Noise may also be caused by another component of the vehicle coming in contact with the half shafts.

CLUNKING NOISE DURING ACCELERATION

This noise may be a result of one of the following conditions:

- A torn seal boot on the inner or outer joint of the half shaft assembly.
- A loose or missing clamp on the inner or outer joint of the half shaft assembly.
- A damaged or worn half shaft CV joint.

SHUDDER OR VIBRATION DURING ACCELERATION

This problem could be a result of:

- A worn or damaged half shaft inner tripod joint.

HALF SHAFT - FRONT (Continued)

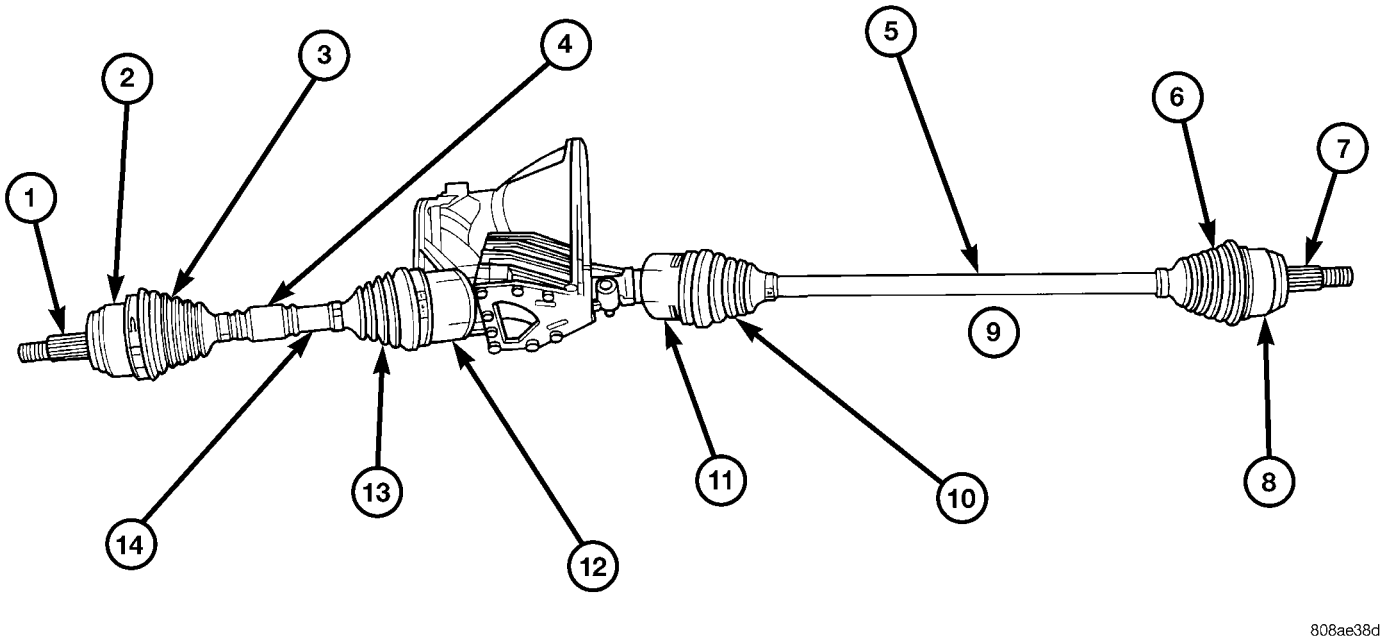

Fig. 1 Unequal Length Half Shaft System

1 - STUB AXLE
2 - OUTER C/V JOINT
3 - OUTER C/V JOINT BOOT
4 - TUNED RUBBER DAMPER WEIGHT
5 - INTERCONNECTING SHAFT
6 - OUTER C/V JOINT BOOT
7 - STUB AXLE
8 - OUTER C/V JOINT
9 - RIGHT HALFSHAFT
10 - INNER TRIPOD JOINT BOOT
11 - INNER TRIPOD JOINT
12 - INNER TRIPOD JOINT
13 - INNER TRIPOD JOINT BOOT
14 - INTERCONNECTING SHAFT LEFT HALFSHAFT

- A sticking tripod joint spider assembly (inner tripod joint only).
- Improper wheel alignment. (Refer to 2 - SUSPENSION/WHEEL ALIGNMENT - STANDARD PROCEDURE)

VIBRATION AT HIGHWAY SPEEDS

This problem could be a result of:

- Foreign material (mud, etc.) packed on the backside of the wheel(s).
- Out of balance tires or wheels. (Refer to 22 - TIRES/WHEELS - STANDARD PROCEDURE)
- Improper tire and/or wheel runout. (Refer to 22 - TIRES/WHEELS - DIAGNOSIS AND TESTING)

REMOVAL

(1) Raise vehicle.

(2) Remove the cotter pin, nut lock (Fig. 2) and wave washer (Fig. 3) from the end of the half shaft.

(3) Remove the wheel and tire assembly from the vehicle. (Refer to 22 - TIRES/WHEELS - REMOVAL)

CAUTION: The halfshaft outer CV Joint, when installed, acts as a bolt and secures the hub/bearing assembly. If the vehicle is to be supported or moved while the halfshaft is removed, it is necessary to install and properly torque a bolt through the hub. This will ensure that the hub/bearing assembly will not loosen.

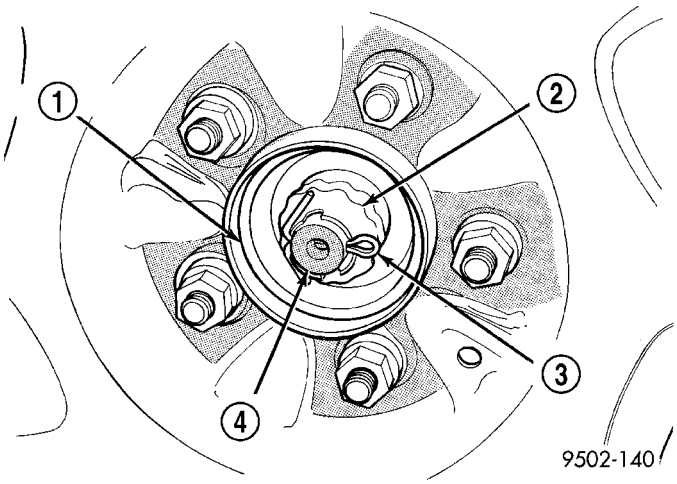

Fig. 2 Half Shaft Retaining Nut

1 - HUB/BEARING
2 - NUT LOCK
3 - COTTER PIN
4 - STUB AXLE

HALF SHAFT - FRONT (Continued)

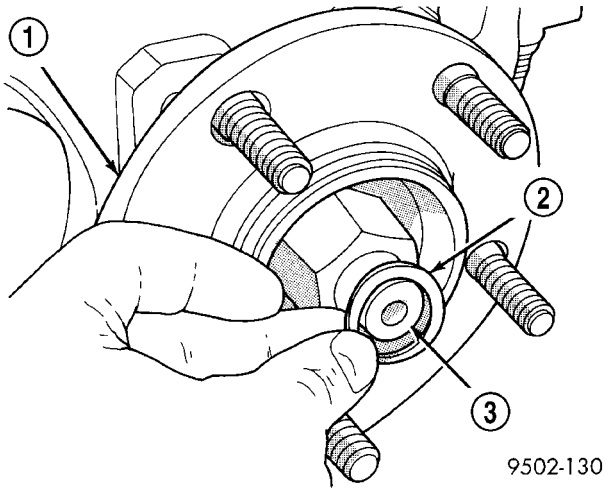

Fig. 3 Wave Washer

1 - HUB/BEARING ASSEMBLY
2 - WAVE WASHER
3 - STUB AXLE

(4) With the vehicle's brakes applied to keep hub from turning, **loosen and remove** the half shaft nut.

(5) Remove the two front disc brake caliper adapter to steering knuckle attaching bolts (Fig. 4).

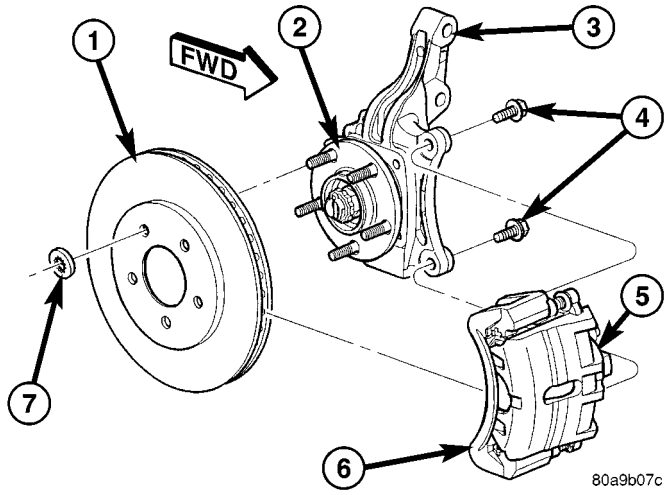

Fig. 4 Front Brake Mounting

1 - BRAKE ROTOR
2 - HUB AND BEARING
3 - STEERING KNUCKLE
4 - ADAPTER MOUNTING BOLTS
5 - BRAKE CALIPER
6 - ADAPTER
7 - CLIP

(6) Remove the disc brake caliper assembly from the steering knuckle. Caliper assembly is removed by first rotating top of caliper assembly away from steering knuckle and then removing bottom of assembly out from under machined abutment on steering knuckle.

(7) Support disc brake caliper assembly by using a wire hook and suspending it from the strut assembly (Fig. 5). **Do not allow the brake caliper assembly to hang by the brake flex hose.**

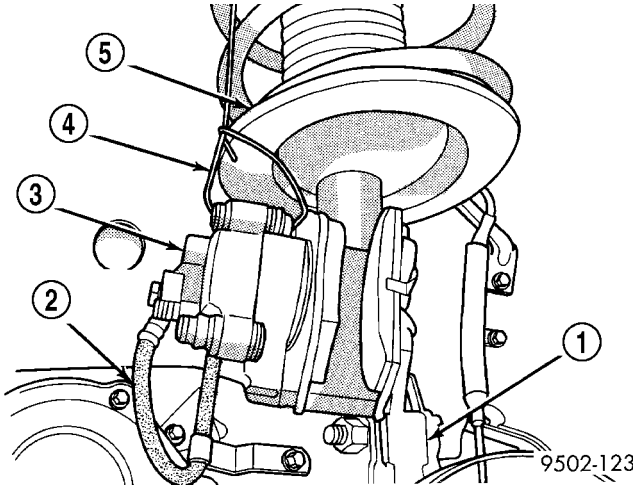

Fig. 5 Properly Supported Disc Brake Caliper - Typical

1 - STEERING KNUCKLE
2 - BRAKE FLEX HOSE
3 - CALIPER ASSEMBLY
4 - WIRE HANGER
5 - STRUT ASSEMBLY

(8) Remove the brake rotor from the hub and bearing assembly.

(9) Remove the steering knuckle-to-strut attachment bolts (Fig. 6) from the steering knuckle.

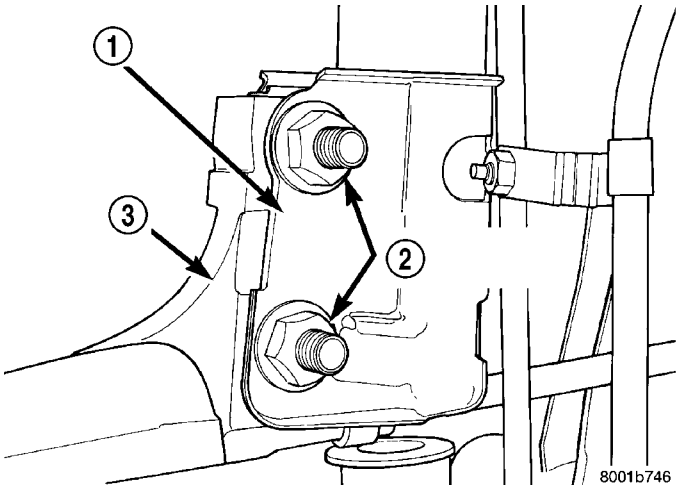

Fig. 6 Strut To Steering Knuckle Attaching Bolts

1 - STRUT CLEVIS BRACKET
2 - NUTS AND BOLTS
3 - STEERING KNUCKLE

(10) Pull the steering knuckle from the strut clevis bracket.

HALF SHAFT - FRONT (Continued)

NOTE: Care must be taken not to separate the inner C/V joint during this operation. Do not allow half shaft to hang by inner C/V joint after removing outer C/V Joint from the hub/bearing assembly in steering knuckle, end of half shaft must be supported.

(11) Pull steering knuckle assembly down and away from the outer C/V joint of the half shaft assembly while pulling the joint out of the hub bearing.

(12) Support the outer end of the half shaft assembly. Insert a pry bar between inner tripod joint and transaxle case (Fig. 7). Pry against inner tripod joint, until tripod joint retaining snap-ring is disengaged from transaxle side gear.

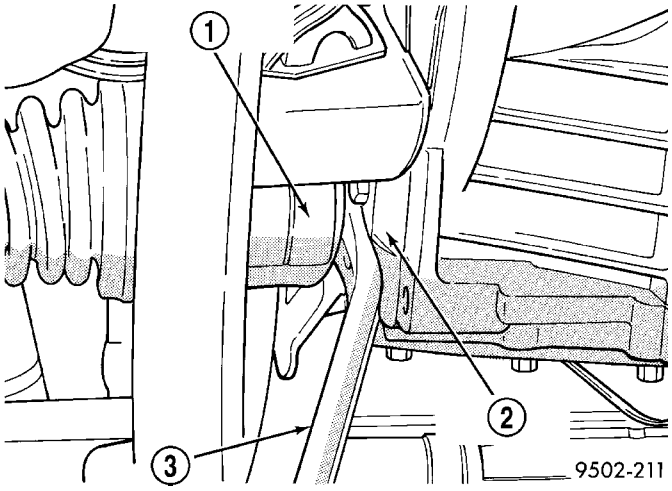

Fig. 7 Disengaging Inner Tripod Joint From Transaxle

1 - INNER TRIPOD JOINT
2 - TRANSAXLE CASE
3 - PRY BAR

(13) Hold inner tripod joint and interconnecting shaft of half shaft assembly. Remove inner tripod joint from transaxle, by pulling it straight out of transaxle side gear and transaxle oil seal (Fig. 8). **When removing tripod joint, do not let spline or snap-ring drag across sealing lip of the transaxle to tripod joint oil seal.**

INSTALLATION

(1) Thoroughly clean spline and oil seal sealing surface, on tripod joint. Lightly lubricate oil seal sealing surface on tripod joint with fresh clean transmission lubricant.

(2) Holding half shaft assembly by tripod joint and interconnecting shaft, install tripod joint into transaxle side gear as far as possible by hand (Fig. 8). Be sure to engage splines prior to applying force.

(3) Grasp inner tripod joint an interconnecting shaft. Forcefully push the tripod joint into side gear of transaxle, until snap-ring is engaged with transaxle side gear. **Test that snap-ring is fully engaged with side gear by attempting to remove tripod joint from transaxle by hand. If snap-ring is fully engaged with side gear, tripod joint will not be removable by hand.**

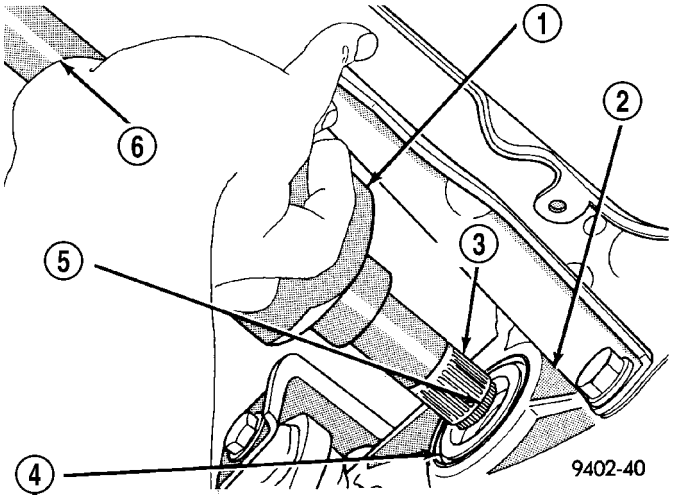

Fig. 8 Tripod Joint Removal from Transaxle

1 - INNER TRIPOD JOINT
2 - TRANSAXLE
3 - SPLINE
4 - OIL SEAL
5 - SNAP-RING
6 - INTERCONNECTING SHAFT

(4) Clean all debris and moisture out of steering knuckle, in the area were outer CV joint will be installed into steering knuckle.

(5) Ensure that front of outer CV joint which fits against the face of the hub and bearing is free of debris and moisture before installing outer CV joint into hub and bearing assembly (Fig. 9).

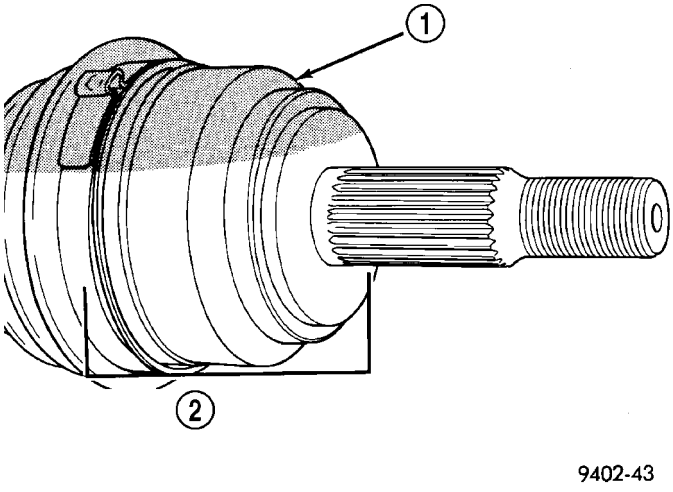

Fig. 9 Outer CV Joint Inspection

1 - OUTER C/V JOINT
2 - THIS AREA OF OUTER C/V JOINT MUST BE FREE OF ALL DEBRIS AND MOISTURE, BEFORE INSTALLATION INTO STEERING KNUCKLE.

HALF SHAFT - FRONT (Continued)

(6) Slide half shaft back into front hub and bearing assembly.

CAUTION: The steering knuckle to strut assembly attaching bolts are serrated and must not be turned during installation. Install nuts while holding bolts stationary in the steering knuckle.

CAUTION: If the vehicle being serviced is equipped with eccentric strut assembly attaching bolts, the eccentric bolt must be installed in the bottom (slotted) hole on the strut clevis bracket (Fig. 10).

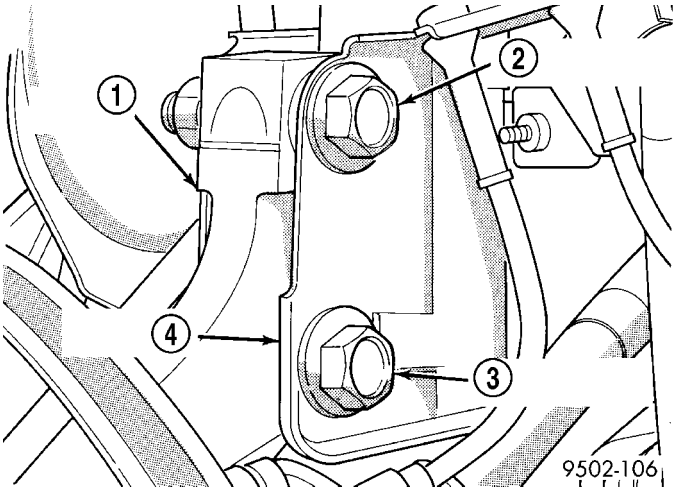

Fig. 10 Correctly Installed Eccentric Attaching Bolt

1 - STEERING KNUCKLE
2 - FLANGED BOLT IN TOP HOLE
3 - CAM BOLT IN BOTTOM HOLE
4 - STRUT CLEVIS BRACKET

(7) Install steering knuckle in clevis bracket of strut damper assembly. Install the strut damper to steering knuckle attaching bolts. Tighten both bolts to a torque of 88 N·m (65 ft. lbs.) plus an additional 1/4 turn.

(8) Install braking disc on hub and bearing assembly.

(9) Install disc brake caliper assembly on steering knuckle. Caliper is installed by first sliding bottom of caliper assembly under abutment on steering knuckle, and then rotating top of caliper against top abutment.

(10) Install disc brake caliper adapter to steering knuckle attaching bolts (Fig. 4). Tighten the disc brake caliper adapter attaching bolts to a torque of 169 N·m (125 ft. lbs.).

(11) Clean all foreign matter from the threads of the outer CV joint. Install the washer and half shaft to hub/bearing assembly nut on half shaft and securely tighten nut.

(12) Install front wheel and tire assembly. Install and tighten the wheel mounting stud nuts in proper sequence until all nuts are torqued to half the required specification. Then repeat the tightening sequence to the full specified torque of 135 N·m (100 ft. lbs.).

(13) Lower vehicle.

(14) With the vehicle's brakes applied to keep hub from turning, tighten the hub nut to a torque of 244 N·m (180 ft. lbs.) (Fig. 11).

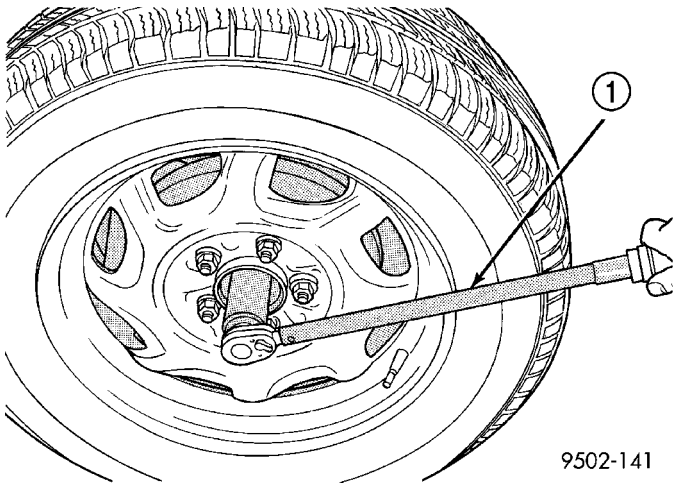

Fig. 11 Torquing Front Half Shaft To Hub Nut

1 - TORQUE WRENCH

(15) Install the spring wave washer on the end of the half shaft.

(16) Install the hub nut lock, and a **new** cotter pin (Fig. 2). Wrap cotter pin prongs tightly around the hub nut lock as shown in (Fig. 2).

(17) Check for correct fluid level in transaxle assembly. (Refer to 21 - TRANSMISSION/TRANSAXLE/AUTOMATIC - 41TE/FLUID - STANDARD PROCEDURE)

HALF SHAFT - FRONT (Continued)

SPECIFICATIONS - HALF SHAFT - FRONT

TORQUE SPECIFICATIONS

DESCRIPTION	N·m	Ft. Lbs.	In. Lbs.
Bolts, Caliper Adapter to Knuckle	169	125	-
Nut, Hub	244	180	-
Nuts, Front Wheel Lug	135	100	-
Nut, Tie Rod End to Knuckle	75	55	-
Nut, Strut Clevis to Knuckle	81 +90°	60 +90°	-

CV BOOT - INNER

REMOVAL

(1) Remove the half shaft requiring boot replacement from the vehicle. (Refer to 3 - DIFFERENTIAL & DRIVELINE/HALF SHAFT - REMOVAL)

(2) Remove large boot clamp which retains inner tripod joint sealing boot to tripod joint housing and discard.

(3) Remove small clamp which retains inner tripod joint sealing boot to interconnecting shaft and discard.

(4) Remove the sealing boot from the tripod housing and slide it down the interconnecting shaft.

(5) Slide the tripod joint housing off the spider assembly and the interconnecting shaft (Fig. 12).

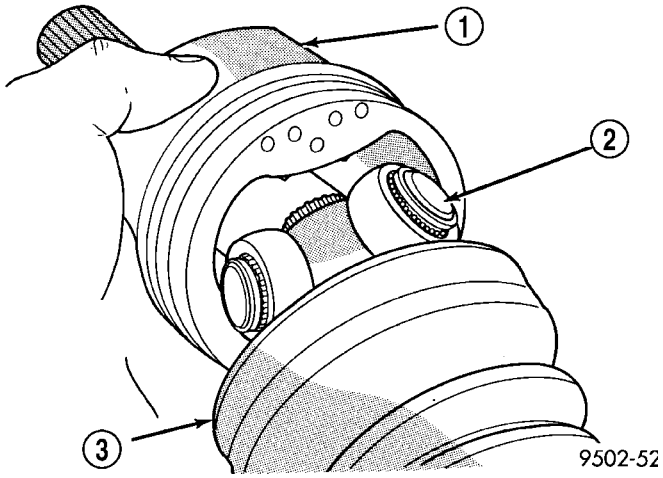

Fig. 12 Spider Assembly Removal from Tripod Joint Housing

1 - TRIPOD JOINT HOUSING
2 - SPIDER ASSEMBLY
3 - SEALING BOOT

(6) Remove snap-ring which retains spider assembly to interconnecting shaft (Fig. 13). **Do not hit the outer tripod bearings in an attempt to remove spider assembly from interconnecting shaft.**

(7) Remove the spider assembly from interconnecting shaft. If spider assembly will not come off interconnecting shaft by hand, it can be removed by tapping spider assembly with a brass drift (Fig. 14).

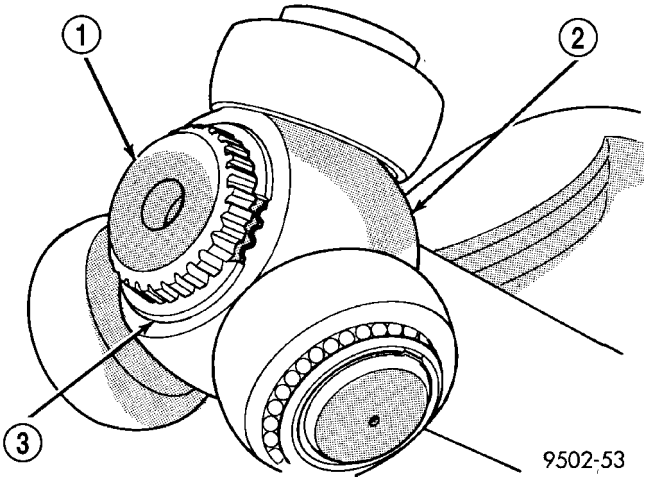

Fig. 13 Spider Assembly Retaining Snap-Ring

1 - INTERCONNECTING SHAFT
2 - SPIDER ASSEMBLY
3 - RETAINING SNAP-RING

(8) Slide sealing boot off interconnecting shaft.

(9) Thoroughly clean and inspect spider assembly, tripod joint housing, and interconnecting shaft for any signs of excessive wear. **If any parts show signs of excessive wear, the half shaft assembly will require replacement. Component parts of these half shaft assemblies are not serviceable.**

CV BOOT - INNER (Continued)

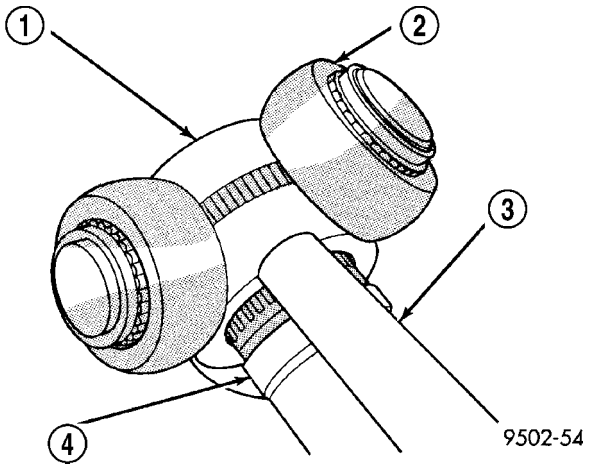

Fig. 14 Spider Assembly Removal from Interconnecting Shaft

1 - SPIDER ASSEMBLY
2 - DO NOT HIT SPIDER ASSEMBLY BEARINGS WHEN REMOVING SPIDER ASSEMBLY
3 - BRASS DRIFT
4 - INTERCONNECTING SHAFT

INSTALLATION

(1) Slide inner CV joint seal boot retaining clamp, onto the interconnecting shaft. Then, slide the replacement inner CV joint sealing boot onto the interconnecting shaft. **Inner CV joint seal boot MUST be positioned on interconnecting shaft so the raised bead on the inside of the small diameter end of the seal boot is in mating groove on interconnecting shaft (Fig. 15).**

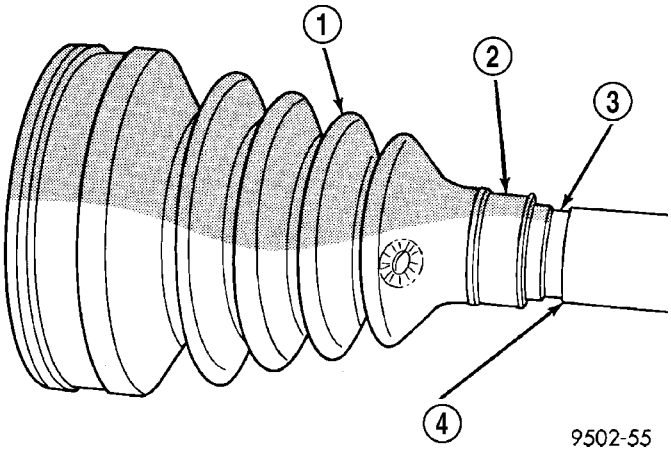

Fig. 15 Sealing Boot Installation on Interconnecting Shaft

1 - SEALING BOOT
2 - RAISED BEAD IN THIS AREA OF SEALING BOOT
3 - GROOVE
4 - INTERCONNECTING SHAFT

(2) Install spider assembly onto interconnecting shaft (Fig. 16). Spider assembly must be installed on interconnecting shaft far enough to fully install spider retaining snap-ring. If the spider assembly will not fully install on interconnecting shaft by hand, it can be installed by tapping the spider body with a brass drift (Fig. 17). **Do not hit the outer tripod bearings in an attempt to install spider assembly on interconnecting shaft.**

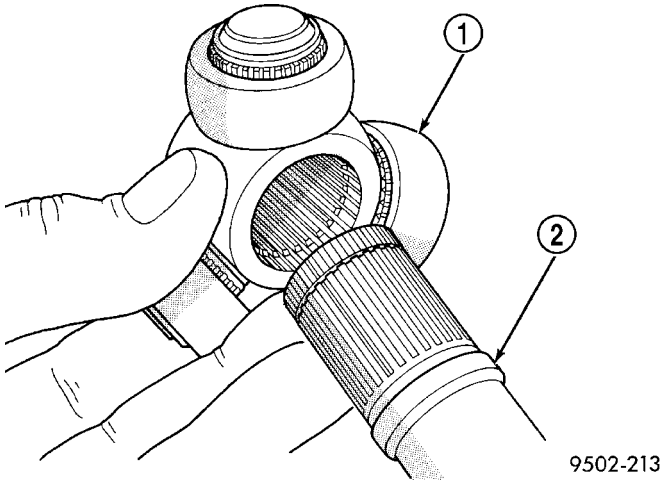

Fig. 16 Spider Assembly Installation on Interconnecting Shaft

1 - SPIDER ASSEMBLY
2 - INTERCONNECTING SHAFT

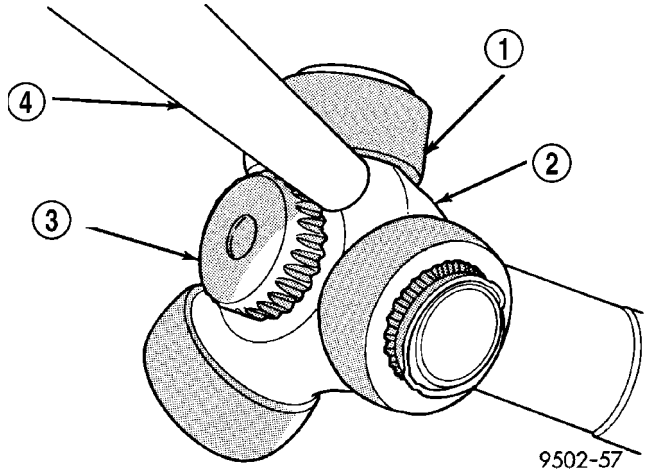

Fig. 17 Installing Spider Assembly on Interconnecting Shaft

1 - DO NOT HIT BEARINGS WHEN INSTALLING THE SPIDER ASSEMBLY
2 - SPIDER ASSEMBLY
3 - INTERCONNECTING SHAFT
4 - BRASS DRIFT

CV BOOT - INNER (Continued)

(3) Install the spider assembly to interconnecting shaft retaining snap-ring into groove on end of interconnecting shaft (Fig. 18). Be sure the snap-ring is fully seated into groove on interconnecting shaft.

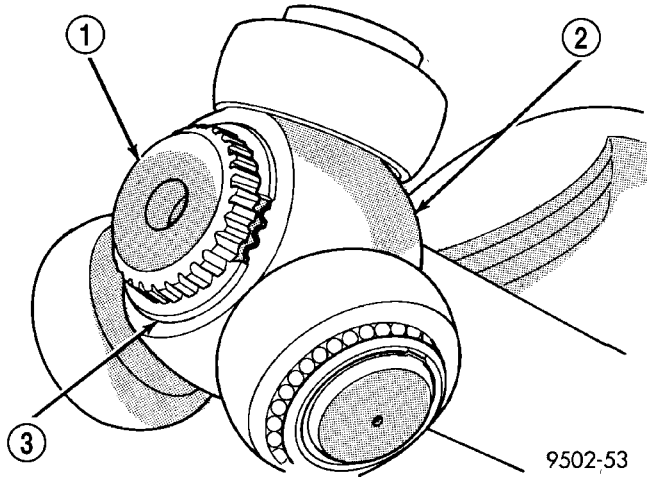

Fig. 18 Spider Assembly Retaining Snap-Ring Installed

1 - INTERCONNECTING SHAFT
2 - SPIDER ASSEMBLY
3 - RETAINING SNAP-RING

(4) Distribute 1/2 the amount of grease provided in the seal boot service package (DO NOT USE ANY OTHER TYPE OF GREASE) into tripod housing. Put the remaining amount into the sealing boot.

(5) Align tripod housing with spider assembly and then slide tripod housing over spider assembly and interconnecting shaft (Fig. 19).

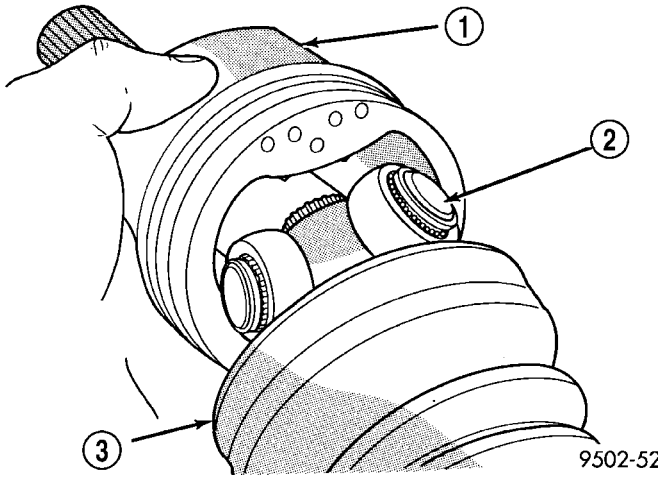

Fig. 19 Installing Tripod Housing on Spider Assembly

1 - TRIPOD JOINT HOUSING
2 - SPIDER ASSEMBLY
3 - SEALING BOOT

(6) Install inner CV joint seal boot to interconnecting shaft clamp evenly on sealing boot.

(7) Place crimping tool C-4975-A over bridge of clamp (Fig. 20).

(8) Tighten nut on crimping tool C-4975-A until jaws on tool are closed completely together, face to face (Fig. 21).

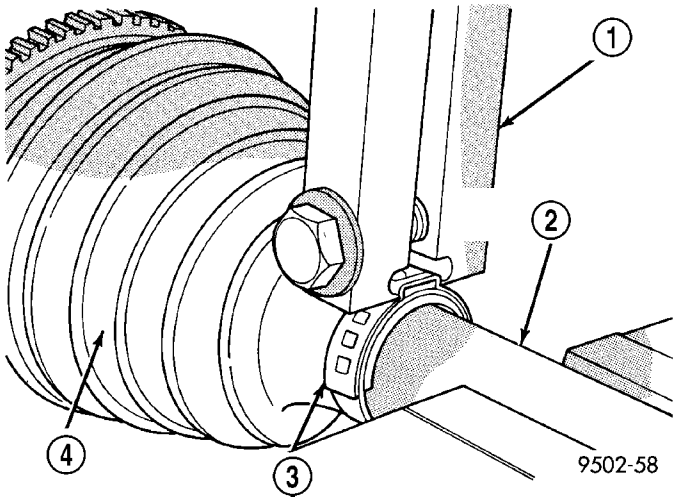

Fig. 20 Crimping Tool Installed on Sealing Boot Clamp - Typical

1 - SPECIAL TOOL C-4975-A
2 - INTERCONNECTING SHAFT
3 - CLAMP
4 - SEALING BOOT

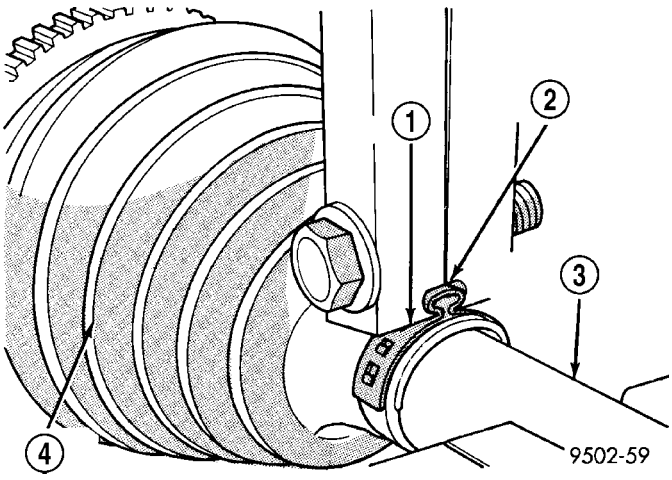

Fig. 21 Sealing Boot Retaining Clamp Installed - Typical

1 - CLAMP
2 - JAWS OF SPECIAL TOOL C-4975-A MUST BE CLOSED COMPLETELY TOGETHER HERE
3 - INTERCONNECTING SHAFT
4 - SEALING BOOT

CAUTION: Seal boot must not be dimpled, stretched or out of shape in any way. If seal boot is NOT shaped correctly, equalize pressure in seal and shape it by hand.

CV BOOT - INNER (Continued)

(9) Position sealing boot into the tripod housing retaining groove. Install seal boot retaining clamp evenly on sealing boot.

(10) Position trilobal boot to interface with the tripod housing. The lobes of the boot must be properly aligned with the recess's of the tripod housing.

CAUTION: The following positioning procedure determines the correct air pressure inside the inner CV joint assembly prior to clamping the sealing boot to inner CV joint housing. If this procedure is not done prior to clamping sealing boot to CV joint housing sealing boot durability can be adversely affected.

CAUTION: When venting the inner CV joint assembly, use care so that the inner CV sealing boot does not get punctured, or in any other way damaged. If sealing boot is punctured, or damaged in any way while being vented, the sealing boot can not be used.

(11) Insert a trim stick between the CV joint housing and the sealing boot insert to vent inner CV joint assembly (Fig. 22). **When inserting trim stick between tripod housing and sealing boot ensure trim stick is held flat and firmly against the tripod housing. If this is not done damage to the sealing boot can occur.**

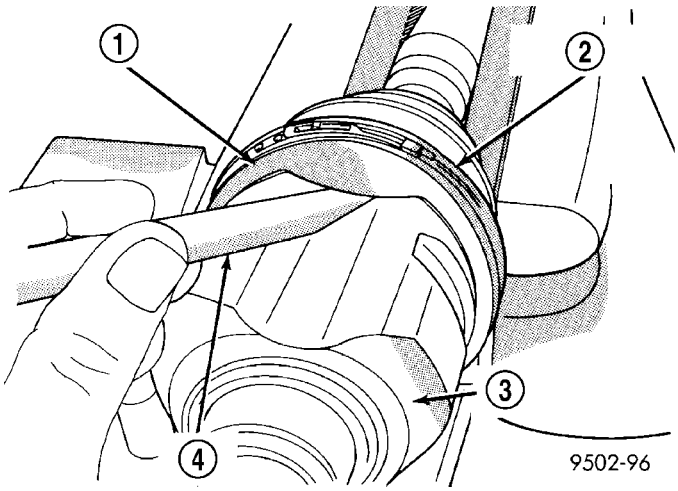

Fig. 22 Trim Stick Inserted for Venting CV Joint

1 - INNER CV JOINT SEALING BOOT
2 - SEALING BOOT CLAMP
3 - INNER CV JOINT HOUSING
4 - TRIM STICK

(12) With trim stick inserted between sealing boot insert and the CV joint housing, position the interconnecting shaft so it is at the center of its travel in the tripod joint housing. Remove the trim stick from between the sealing boot insert and the CV joint housing. **This procedure will equalize the air pressure in the CV joint, preventing premature sealing boot failure.**

(13) Clamp CV joint sealing boot to CV joint, using required procedure for type of boot clamp application.

CRIMP TYPE BOOT CLAMP

If seal boot uses crimp type boot clamp, use the following procedure to install the retaining clamp.

(1) Place crimping tool C-4975-A over bridge of clamp (Fig. 23).

(2) Tighten nut on crimping tool C-4975-A until jaws on tool are closed completely together, face to face (Fig. 24).

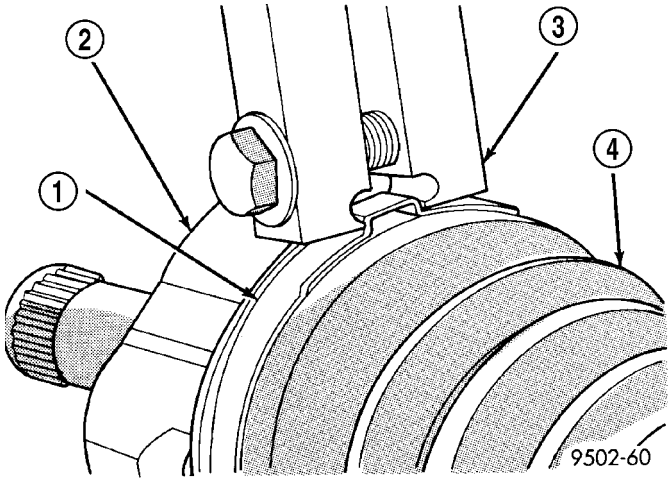

Fig. 23 Crimping Tool Installed on Sealing Boot Clamp

1 - CLAMP
2 - TRIPOD JOINT HOUSING
3 - SPECIAL TOOL C-4975-A
4 - SEALING BOOT

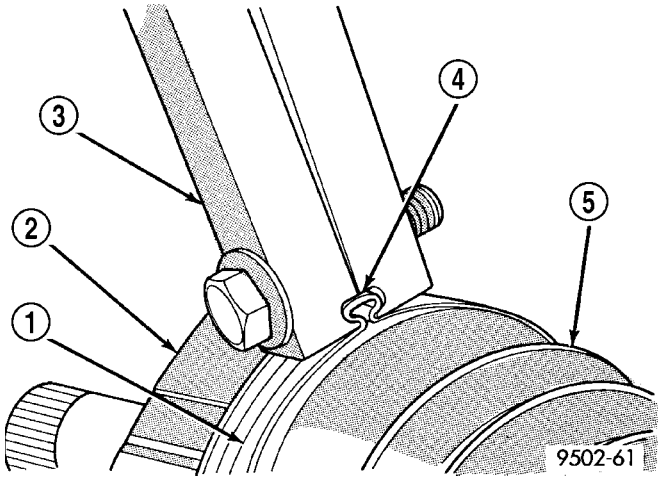

Fig. 24 Sealing Boot Retaining Clamp Installed

1 - CLAMP
2 - TRIPOD HOUSING
3 - SPECIAL TOOL C-4975-A
4 - JAWS OF SPECIAL TOOL C-4975-A MUST BE CLOSED COMPLETELY TOGETHER HERE
5 - SEALING BOOT

CV BOOT - INNER (Continued)

LATCHING TYPE BOOT CLAMP

If seal boot uses low profile latching type boot clamp, use the following procedure to install the retaining clamp.

(1) Place prongs of clamp locking tool in the holes of the clamp (Fig. 25).

(2) Squeeze tool together until top band of clamp is latched behind the two tabs on lower band of clamp (Fig. 26).

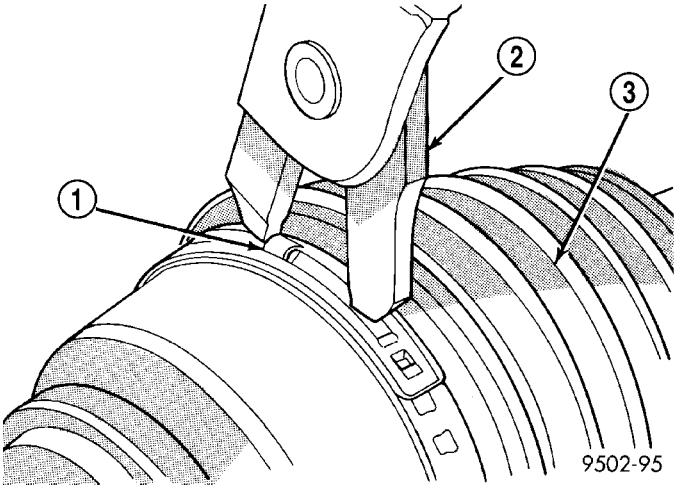

Fig. 25 Clamping Tool Installed on Sealing Boot Clamp

1 - CLAMP
2 - TOOL YA3050, OR EQUIVALENT
3 - SEALING BOOT

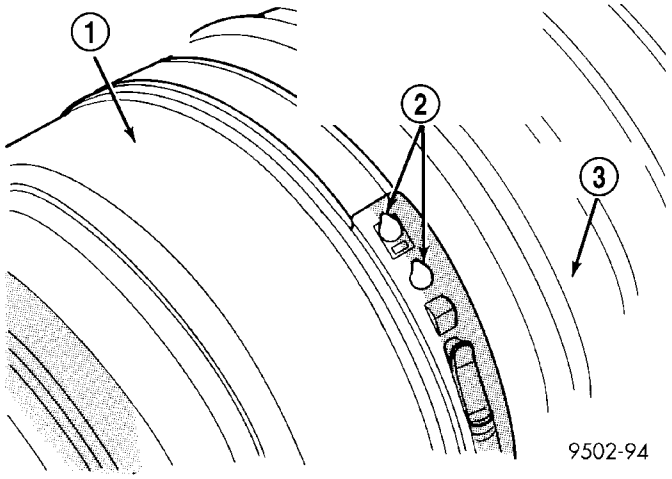

Fig. 26 Sealing Boot Clamp Correctly Installed

1 - INNER TRIPOD JOINT HOUSING
2 - TOP BAND OF CLAMP MUST BE RETAINED BY TABS AS SHOWN HERE TO CORRECTLY LATCH BOOT CLAMP
3 - SEALING BOOT

(14) Install the half shaft back into the vehicle. (Refer to 3 - DIFFERENTIAL & DRIVELINE/HALF SHAFT - INSTALLATION)

CV BOOT - OUTER

REMOVAL

(1) Remove halfshaft assembly requiring boot replacement from vehicle. (Refer to 3 - DIFFERENTIAL & DRIVELINE/HALF SHAFT - REMOVAL)

(2) Remove large boot clamp retaining C/V joint sealing boot to C/V joint housing (Fig. 27) and discard. Remove small clamp that retains outer C/V joint sealing boot to interconnecting shaft and discard. Remove sealing boot from outer C/V joint housing and slide it down interconnecting shaft.

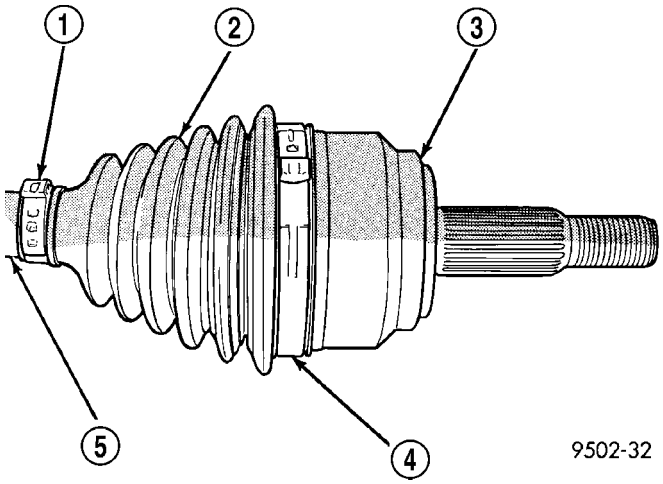

Fig. 27 Outer C/V Joint Seal Boot Clamps

1 - SMALL CLAMP
2 - SEALING BOOT
3 - OUTER C/V JOINT HOUSING
4 - LARGE CLAMP
5 - INTERCONNECTING SHAFT

(3) Wipe away grease to expose outer C/V joint and interconnecting shaft.

(4) Remove outer C/V joint from interconnecting shaft using the following procedure: Support interconnecting shaft in a vise equipped with protective caps on jaws of vise to prevent damage to interconnecting shaft. Then, using a soft–faced hammer, sharply hit the end of the C/V joint housing to dislodge housing from internal circlip on interconnecting shaft (Fig. 28). Then slide outer C/V joint off end of interconnecting shaft, joint may have to be tapped off shaft using a **soft–faced** hammer.

(5) Remove large circlip (Fig. 29) from the interconnecting shaft before attempting to remove outer C/V joint sealing boot.

(6) Slide sealing boot off interconnecting shaft.

(7) Thoroughly clean and inspect outer C/V joint assembly and interconnecting joint for any signs of excessive wear. **If any parts show signs of excessive wear, the halfshaft assembly will require replacement. Component parts of these halfshaft assemblies are not serviceable.**

CV BOOT - OUTER (Continued)

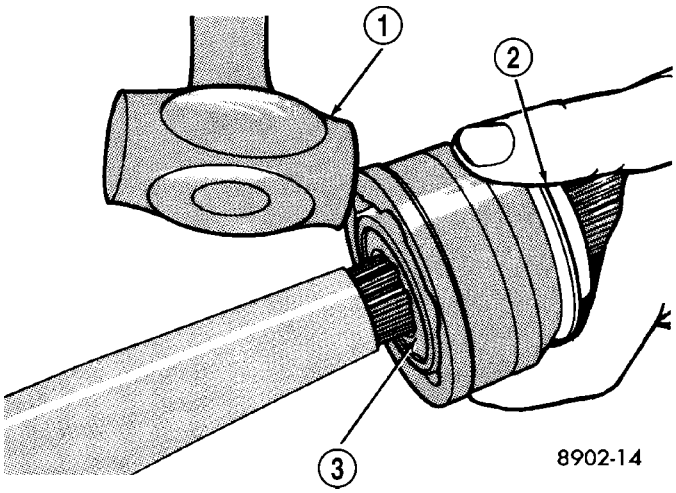

Fig. 28 Outer C/V Joint Removal from Interconnecting Shaft

1 - SOFT HAMMER (TAP INNER RACE ONLY)
2 - WEAR SLEEVE
3 - CIRCLIP (OUTER END OF SHAFT)

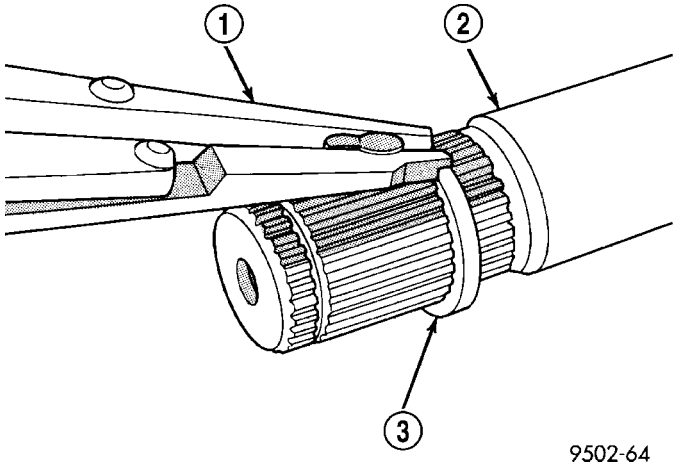

Fig. 29 Circlip Removal from Interconnecting Shaft

1 - SNAP RING PLIERS
2 - INTERCONNECTING SHAFT
3 - CIRCLIP

INSTALLATION

(1) Slide new sealing boot to interconnecting shaft retaining clamp onto interconnecting shaft. Slide the outer C/V joint assembly sealing boot onto the interconnecting shaft (Fig. 30). **Seal boot MUST be positioned on interconnecting shaft so the raised bead on the inside of the seal boot is in groove on interconnecting shaft.**

(2) Align splines on interconnecting shaft with splines on cross of outer C/V joint assembly and start outer C/V joint onto interconnecting shaft.

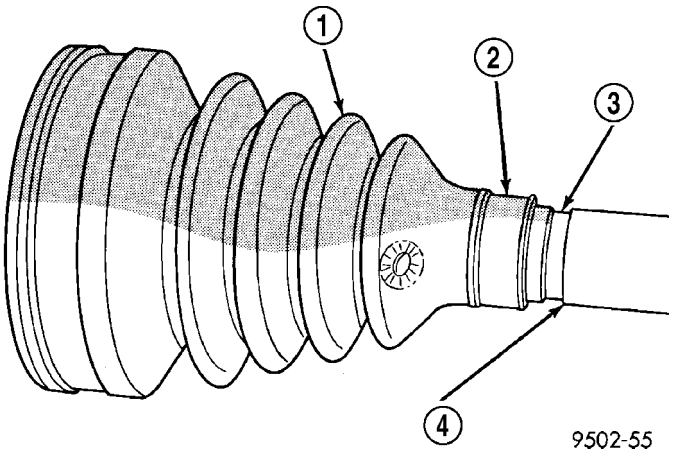

Fig. 30 Sealing Boot Installation on Interconnecting Shaft

1 - SEALING BOOT
2 - RAISED BEAD IN THIS AREA OF SEALING BOOT
3 - GROOVE
4 - INTERCONNECTING SHAFT

(3) Install outer C/V joint assembly onto interconnecting shaft by using a **soft–faced** hammer and tapping end of stub axle (with hub nut installed) until outer C/V joint is fully seated on interconnecting shaft (Fig. 31).

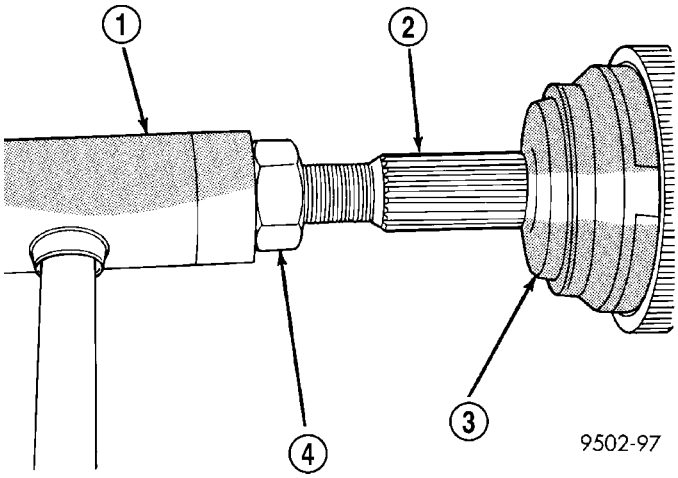

Fig. 31 Outer C/V Joint Installation on Interconnecting

1 - SOFT FACED HAMMER
2 - STUB AXLE
3 - OUTER C/V JOINT
4 - HUB NUT

CV BOOT - OUTER (Continued)

(4) Outer C/V joint assembly must be installed on interconnecting shaft until cross of outer C/V joint assembly is seated against circlip on interconnecting shaft (Fig. 32).

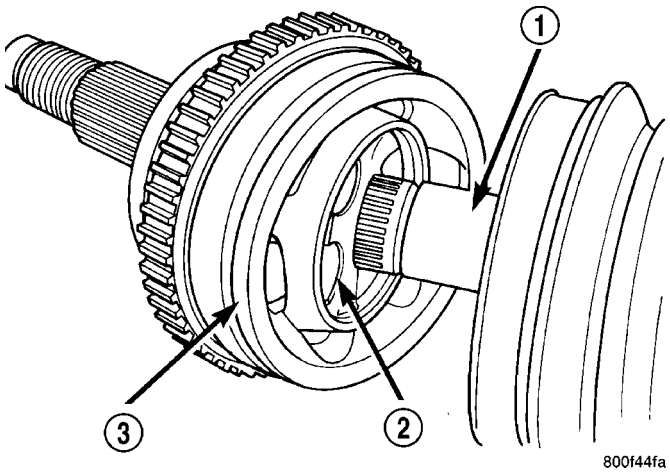

Fig. 32 Outer C/V Joint Correctly Installed on Interconnecting Shaft

1 - INTERCONNECTING SHAFT
2 - CROSS
3 - OUTER C/V JOINT ASSEMBLY

(5) Distribute 1/2 the amount of grease provided in seal boot service package (DO NOT USE ANY OTHER TYPE OF GREASE) into outer C/V joint assembly housing. Put the remaining amount into the sealing boot.

(6) Install outer C/V joint sealing boot to interconnecting shaft clamp evenly on sealing boot.

(7) Clamp sealing boot onto interconnecting shaft using crimper, Special Tool C-4975-A and the following procedure. Place crimping tool C-4975-A over bridge of clamp (Fig. 33). Tighten nut on crimping tool C-4975-A until jaws on tool are closed completely together, face to face (Fig. 34).

CAUTION: Seal must not be dimpled, stretched, or out–of–shape in any way. If seal is NOT shaped correctly, equalize pressure in seal and shape it by hand.

(8) Position outer C/V joint sealing boot into its retaining groove on outer C/V joint housing. Install sealing boot to outer C/V joint retaining clamp evenly on sealing boot.

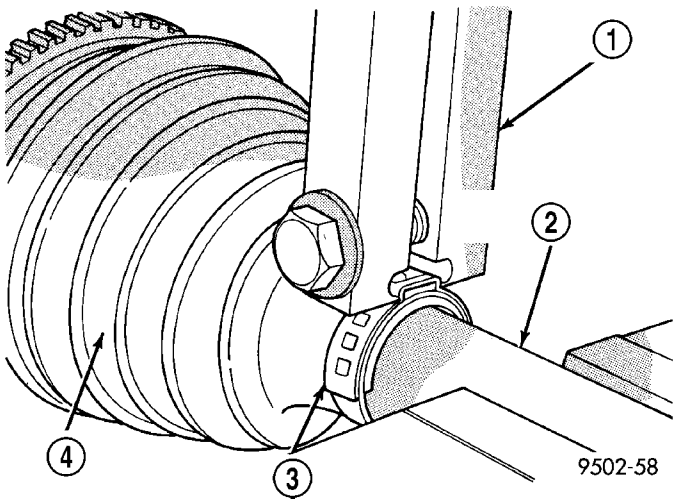

Fig. 33 Crimping Tool Installed on Sealing Boot Clamp

1 - SPECIAL TOOL C-4975A
2 - INTERCONNECTING SHAFT
3 - CLAMP
4 - SEALING BOOT

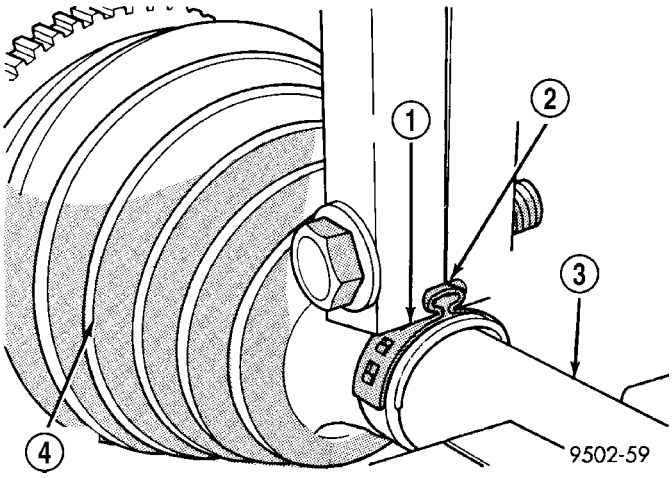

Fig. 34 Sealing Boot Retaining Clamp Installed

1 - CLAMP
2 - JAWS OF SPECIAL TOOL C-4975A MUST BE CLOSED COMPLETELY TOGETHER HERE
3 - INTERCONNECTING SHAFT
4 - SEALING BOOT

CV BOOT - OUTER (Continued)

(9) Clamp sealing boot onto outer C/V joint housing using Crimper, Special Tool C-4975-A and the following procedure. Place crimping tool C-4975-A over bridge of clamp (Fig. 35). Tighten nut on crimping tool C-4975-A until jaws on tool are closed completely together, face to face (Fig. 36).

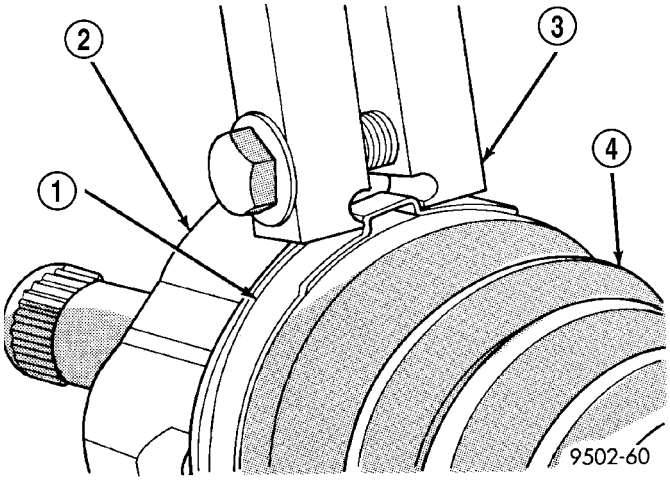

Fig. 35 Crimping Tool Installed on Sealing Boot Clamp

1 - CLAMP
2 - TRIPOD JOINT HOUSING
3 - SPECIAL TOOL C-4975A
4 - SEALING BOOT

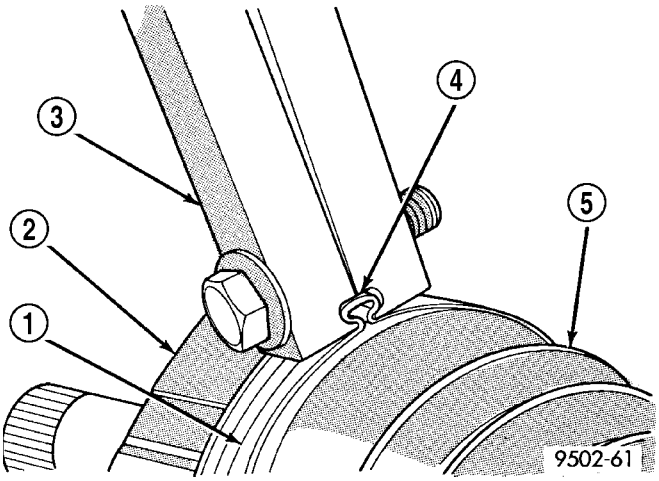

Fig. 36 Sealing Boot Retaining Clamp Installed

1 - CLAMP
2 - TRIPOD HOUSING
3 - SPECIAL TOOL C-4975A
4 - JAWS OF SPECIAL TOOL C-4975A MUST BE CLOSED COMPLETELY TOGETHER HERE
5 - SEALING BOOT

(10) Install the halfshaft requiring boot replacement back on the vehicle. (Refer to 3 - DIFFERENTIAL & DRIVELINE/HALF SHAFT - INSTALLATION)

BRAKES

TABLE OF CONTENTS

page

BRAKES - BASE 1

page

BRAKES - ABS 87

BRAKES - BASE

TABLE OF CONTENTS

page

BRAKES - BASE
- DESCRIPTION
  - DESCRIPTION - BASE BRAKES 3
  - DESCRIPTION - BASE BRAKES (EXPORT) . . . 3
- OPERATION - BASE BRAKES 3
- WARNING 4
- CAUTION 4
- DIAGNOSIS AND TESTING - BASE BRAKE SYSTEM 4
- STANDARD PROCEDURE - BASE BRAKE BLEEDING 8
- SPECIFICATIONS
  - BRAKE FASTENER TORQUE 9
- SPECIAL TOOLS
  - BASE BRAKE SYSTEM 10

BRAKE FLUID LEVEL SWITCH
- DESCRIPTION 10
- OPERATION 10
- REMOVAL 11
- INSTALLATION 11

ADJUSTABLE PEDALS SWITCH
- REMOVAL 11
- INSTALLATION 11

HYDRAULIC/MECHANICAL
- DESCRIPTION
  - DESCRIPTION - DISC BRAKES (FRONT) . . . 11
  - DESCRIPTION - DISC BRAKES (REAR) 13
  - DESCRIPTION - DISC BRAKES (EXPORT) . . 13
  - DESCRIPTION - DRUM BRAKES (REAR) . . . 13
- OPERATION
  - OPERATION - DISC BRAKES (FRONT) 13
  - OPERATION - DISC BRAKES (REAR) 14
- DIAGNOSIS AND TESTING - DRUM BRAKE AUTOMATIC ADJUSTER 14

BRAKE LINES
- DESCRIPTION - BRAKE TUBES AND HOSES . . 14
- OPERATION - BRAKE TUBES AND HOSES . . . 14
- INSPECTION - BRAKE TUBES AND HOSES . . . 14

BRAKE PADS/SHOES - FRONT
- REMOVAL
  - REMOVAL - FRONT DISC BRAKE SHOES (CONTINENTAL TEVES BRAKES) 15
  - REMOVAL - FRONT DISC BRAKE SHOES (TRW BRAKES) 15
- CLEANING - DISC BRAKE SHOES 16
- INSPECTION - DISC BRAKE SHOES 16
- INSTALLATION
  - INSTALLATION - FRONT DISC BRAKE SHOES (CONTINENTAL TEVES BRAKES) . . . 16
  - INSTALLATION - FRONT DISC BRAKE SHOES (TRW BRAKES) 17

BRAKE PADS/SHOES - REAR DISC
- REMOVAL - REAR DISC BRAKE SHOES 17
- CLEANING - DISC BRAKE SHOES 18
- INSPECTION - DISC BRAKE SHOES 18
- INSTALLATION - REAR DISC BRAKE SHOES . . 19

BRAKE PADS/SHOES - REAR DRUM
- REMOVAL - REAR DRUM BRAKE SHOES 19
- INSPECTION - REAR DRUM BRAKE SHOE LINING 22
- INSTALLATION - REAR DRUM BRAKE SHOES . . 22
- ADJUSTMENTS
  - ADJUSTMENT - REAR DRUM BRAKE SHOES 23

DISC BRAKE CALIPER - FRONT
- REMOVAL
  - REMOVAL - FRONT DISC BRAKE CALIPER (CONTINENTAL TEVES BRAKES) 24
  - REMOVAL - FRONT DISC BRAKE CALIPER (TRW BRAKES) 24
- DISASSEMBLY
  - DISASSEMBLY - CALIPER GUIDE PIN BUSHINGS (CONTINENTAL TEVES BRAKES) 24

DISASSEMBLY - CALIPER PISTON AND SEAL 24
CLEANING - CALIPER 25
INSPECTION - CALIPER 25
ASSEMBLY
ASSEMBLY - CALIPER GUIDE PIN BUSHINGS (CONTINENTAL TEVES BRAKES) 25
ASSEMBLY - CALIPER PISTON AND SEAL . . 26
INSTALLATION
INSTALLATION - FRONT DISC BRAKE CALIPER (CONTINENTAL TEVES BRAKES) 27
INSTALLATION - FRONT DISC BRAKE CALIPER (TRW BRAKES) 27
DISC BRAKE CALIPER - REAR
REMOVAL - REAR DISC BRAKE CALIPER 28
DISASSEMBLY - CALIPER PISTON AND SEAL . . 28
CLEANING - CALIPER 29
INSPECTION - CALIPER 29
ASSEMBLY - CALIPER PISTON AND SEAL . . . 30
INSTALLATION - REAR DISC BRAKE CALIPER . . 30
DISC BRAKE CALIPER ADAPTER
REMOVAL - FRONT DISC BRAKE CALIPER ADAPTER 31
INSTALLATION - FRONT DISC BRAKE CALIPER ADAPTER 31
DISC BRAKE CALIPER GUIDE PINS
REMOVAL - DISC BRAKE CALIPER GUIDE PINS (TRW BRAKES) 31
INSTALLATION - DISC BRAKE CALIPER GUIDE PINS (TRW BRAKES) 32
DRUM
REMOVAL 32
INSTALLATION 32
FLUID
DIAGNOSIS AND TESTING - BRAKE FLUID CONTAMINATION 33
STANDARD PROCEDURE - BRAKE FLUID LEVEL CHECKING 33
SPECIFICATIONS
BRAKE FLUID 33
JUNCTION BLOCK
DESCRIPTION - NON-ABS JUNCTION BLOCK . . 33
OPERATION - NON-ABS JUNCTION BLOCK . . 33
REMOVAL - NON-ABS JUNCTION BLOCK 34
INSTALLATION - NON-ABS JUNCTION BLOCK . . 34
MASTER CYLINDER
DESCRIPTION
DESCRIPTION 35
DESCRIPTION - RHD 35
OPERATION 36
STANDARD PROCEDURE - MASTER CYLINDER BLEEDING 36
REMOVAL
REMOVAL - LHD 36
REMOVAL - RHD 37
DISASSEMBLY - MASTER CYLINDER (FLUID RESERVOIR) 38
ASSEMBLY - MASTER CYLINDER (FLUID RESERVOIR) 39
INSTALLATION
INSTALLATION - LHD 39
INSTALLATION - RHD 39
PEDALS - ADJUSTABLE
REMOVAL 40
INSTALLATION 43
PEDAL TORQUE SHAFT - RHD
REMOVAL 44
INSTALLATION 44
POWER BRAKE BOOSTER
DESCRIPTION 45
OPERATION 46
DIAGNOSIS AND TESTING - POWER BRAKE BOOSTER 46
REMOVAL
REMOVAL - LHD 46
REMOVAL - RHD 48
INSTALLATION
INSTALLATION - LHD 50
INSTALLATION - RHD 51
PROPORTIONING VALVE
DESCRIPTION - PROPORTIONING VALVE (HEIGHT SENSING) 53
OPERATION - PROPORTIONING VALVE (HEIGHT SENSING) 53
DIAGNOSIS AND TESTING - PROPORTIONING VALVE (HEIGHT SENSING) 54
REMOVAL - PROPORTIONING VALVE (HEIGHT SENSING) 55
INSTALLATION - PROPORTIONING VALVE (HEIGHT SENSING) 55
ROTOR
DIAGNOSIS AND TESTING - BRAKE ROTOR . . 55
STANDARD PROCEDURE - BRAKE ROTOR MACHINING 58
REMOVAL - FRONT BRAKE ROTOR 59
INSTALLATION - FRONT BRAKE ROTOR 59
SPECIFICATIONS
BRAKE ROTOR 60
BRAKE ROTOR - EXPORT 60
SUPPORT PLATE - DRUM BRAKE
REMOVAL 61
INSTALLATION 61
WHEEL CYLINDERS
REMOVAL 62
INSPECTION 62
INSTALLATION 62
PARKING BRAKE
DESCRIPTION
DESCRIPTION 62
DESCRIPTION - EXPORT 63
OPERATION 63

STANDARD PROCEDURE
STANDARD PROCEDURE - PARKING BRAKE AUTOMATIC ADJUSTER TENSION RELEASE 63
STANDARD PROCEDURE - PARKING BRAKE AUTOMATIC ADJUSTER TENSION RESET 64
STANDARD PROCEDURE - CABLE END CLEANING AND LUBRICATION 65
ADJUSTMENTS
ADJUSTMENT - PARKING BRAKE CABLES 65
CABLE - PARKING BRAKE FRONT
REMOVAL
REMOVAL 66
REMOVAL - FOLD-IN-FLOOR SEATING 66
REMOVAL - EXPORT 67
INSTALLATION
INSTALLATION 67
INSTALLATION - FOLD-IN-FLOOR SEATING . 68
INSTALLATION - EXPORT 68
CABLE - PARKING BRAKE INTERMEDIATE
REMOVAL 69
INSTALLATION 69
CABLE - PARKING BRAKE REAR
REMOVAL
REMOVAL - RIGHT REAR 70
REMOVAL - LEFT REAR 71
REMOVAL - FOLD-IN-FLOOR SEATING 72
INSTALLATION
INSTALLATION - RIGHT REAR 74
INSTALLATION - LEFT REAR 75
INSTALLATION - FOLD-IN-FLOOR SEATING 75
LEVER - PARKING BRAKE
REMOVAL 75
INSTALLATION 76
LEVER - PARKING BRAKE (EXPORT)
REMOVAL - PARKING BRAKE LEVER AND FRONT CABLE 77
INSTALLATION - PARKING BRAKE LEVER AND FRONT CABLE 77
SHOES - PARKING BRAKE
REMOVAL 78
INSTALLATION 84
ADJUSTMENTS
ADJUSTMENT - PARKING BRAKE SHOES . . 85

BRAKES - BASE

DESCRIPTION

DESCRIPTION - BASE BRAKES

The base brake system consists of the following components:

- Brake pedal
- Power brake booster
- Master cylinder
- Brake tubes and hoses
- Proportioning valve (non-ABS vehicles only)
- Disc brakes
- Drum brakes
- Brake lamp switch
- Brake fluid level switch
- Parking brakes

Front disc brakes control the braking of the front wheels; rear braking is controlled by rear drum brakes or rear disc brakes depending on options.

The hydraulic brake system is diagonally split on both the non-antilock braking systems and antilock braking systems. That means the left front and right rear brakes are on one hydraulic circuit and the right front and left rear are on the other.

For information on the brake lamp switch, (Refer to 8 - ELECTRICAL/LAMPS/LIGHTING - EXTERIOR/BRAKE LAMP SWITCH - DESCRIPTION)

Vehicles equipped with the optional antilock brake system (ABS) use a system designated Mark 20e. It is available with or without traction control. This system shares most base brake hardware used on vehicles without ABS. ABS components are described in detail in ANTILOCK BRAKE SYSTEM.

DESCRIPTION - BASE BRAKES (EXPORT)

Four-Wheel Disc Antilock Brakes are standard on all models.

OPERATION - BASE BRAKES

When a vehicle needs to be stopped, the driver applies the brake pedal. The brake pedal pushes the input rod of the power brake booster into the booster. The booster uses vacuum to ease pedal effort as force is transferred through the booster to the master cylinder. The booster's output rod pushes in the master cylinder's primary and secondary pistons applying hydraulic pressure through the chassis brake tubes to the brakes at each tire and wheel assembly.

The parking brakes are foot-operated. When applied, the parking brake lever pulls on cables that actuate brake shoes at each rear wheel. These shoes come in contact with a hub mounted drum (drum for disc/drum brakes or drum-in-hat for disc/disc brakes) and hold it in place.

WARNING

WARNING: DUST AND DIRT ACCUMULATING ON BRAKE PARTS DURING NORMAL USE MAY CONTAIN ASBESTOS FIBERS FROM PRODUCTION OR AFTERMARKET BRAKE LININGS. BREATHING EXCESSIVE CONCENTRATIONS OF ASBESTOS FIBERS CAN CAUSE SERIOUS BODILY HARM. EXERCISE CARE WHEN SERVICING BRAKE PARTS. DO NOT SAND OR GRIND BRAKE LINING UNLESS EQUIPMENT USED IS DESIGNED TO CONTAIN THE DUST RESIDUE. DO NOT CLEAN BRAKE PARTS WITH COMPRESSED AIR OR BY DRY BRUSHING. CLEANING SHOULD BE DONE BY DAMPENING THE BRAKE COMPONENTS WITH A FINE MIST OF WATER, THEN WIPING THE BRAKE COMPONENTS CLEAN WITH A DAMPENED CLOTH. DISPOSE OF CLOTH AND ALL RESIDUE CONTAINING ASBESTOS FIBERS IN AN IMPERMEABLE CONTAINER WITH THE APPROPRIATE LABEL. FOLLOW PRACTICES PRESCRIBED BY THE OCCUPATIONAL SAFETY AND HEALTH ADMINISTRATION (OSHA) AND THE ENVIRONMENTAL PROTECTION AGENCY (EPA) FOR THE HANDLING, PROCESSING, AND DISPOSING OF DUST OR DEBRIS THAT MAY CONTAIN ASBESTOS FIBERS.

CAUTION

CAUTION: During service procedures, grease or any other foreign material must be kept off brake shoes and braking surfaces of brake rotor or drum, and external surfaces of hub and bearing assembly.

CAUTION: Brake rotor and caliper handling must be done in such a way as to avoid damage to the rotor, especially the machined surfaces, and scratching or nicking of the brake linings.

CAUTION: Only the recommended jacking or hoisting procedures for this vehicle are to be used whenever it is necessary to lift a vehicle. Failure to raise a vehicle utilizing the recommended lift points can result in damage to the vehicle. (Refer to LUBRICATION & MAINTENANCE/HOISTING - STANDARD PROCEDURE)

DIAGNOSIS AND TESTING - BASE BRAKE SYSTEM

NOTE: There are three diagnosis charts following that cover the RED BRAKE WARNING INDICATOR LAMP, BRAKE NOISE and OTHER BRAKE CONDITIONS.

RED BRAKE WARNING INDICATOR LAMP

CONDITION	POSSIBLE CAUSES	CORRECTION
RED BRAKE WARNING LAMP ON	1. Parking brake lever not fully released.	1. Release parking brake lever.
	2. Parking brake warning lamp switch on parking brake lever.	2. Inspect and replace switch as necessary.
	3. Brake fluid level low in reservoir.	3. Fill reservoir. Check entire system for leaks. Repair or replace as required.
	4. Brake fluid level switch.	4. Disconnect switch wiring connector. If lamp goes out, replace switch.
	5. Mechanical instrument cluster (MIC) problem.	5. Refer to appropriate Diagnostic information.
	6. Amber ABS Warning Indicator Lamp also illuminated.	6. Refer to appropriate Diagnostic information.

BRAKES - BASE (Continued)

BRAKE NOISE

CONDITION	POSSIBLE CAUSES	CORRECTION
CLICK OR SQUAWK ON PEDAL APPLICATION	1. Brake lamp switch.	1. Replace switch.
	2. Brake Transmission Shift Interlock Linkage.	2. Lubricate BTSI linkage.
	3. Pedal pivot bushings	3. Lubricate pivot bushings. Replace if necessary.
DISC BRAKE CHIRP	1. Excessive brake rotor runout.	1. Follow brake rotor diagnosis and testing. Correct as necessary.
	2. Lack of lubricant on brake caliper slides.	2. Lubricate brake caliper slides.
	3. Caliper/shoes not fully seated.	3. Reseat caliper/shoes.
DISC BRAKE RATTLE OR CLUNK	1. Broken or missing anti-rattle spring clips on shoes.	1. Replace brake shoes.
	2. Caliper guide pins/bolts loose.	2. Tighten guide pins/bolts.
DISC BRAKE SQUEAK AT LOW SPEED (WHILE APPLYING LIGHT BRAKE PEDAL EFFORT)	1. Brake shoe linings.	1. Replace brake shoes.
DRUM BRAKE CHIRP	1. Lack of lubricant on brake shoe support plate where shoes ride.	1. Lubricate shoe contact areas on brake shoe support plates.
DRUM BRAKE CLUNK	1. Drum(s) have threaded machined braking surface.	1. Replace brake drums as necessary.
DRUM BRAKE HOWL OR MOAN	1. Lack of lubricant on brake shoe support plate where shoes ride and at the anchor.	1. Lubricate shoe contact areas on brake shoe support plates and at the anchor.
	2. Rear brake shoes.	2. Replace rear brake shoes.
DRUM BRAKE SCRAPING OR WHIRRING	1. ABS wheel speed sensor or tone wheel.	1. Inspect, correct or replace faulty component(s).
SCRAPING (METAL-TO-METAL).	1. Foreign object interference with brakes.	1. Inspect brakes and remove foreign object.
	2. Brake shoes worn out.	2. Replace brake shoes. Inspect rotors and drums. Reface or replace as necessary.

BRAKES - BASE (Continued)

OTHER BRAKE CONDITIONS

CONDITION	POSSIBLE CAUSES	CORRECTION
BRAKES CHATTER	1. Rear brake drum out of round or disc brake rotor has excessive thickness variation.	1. Isolate condition as rear or front. Reface or replace brake drums or rotors as necessary.
BRAKES DRAG (FRONT OR ALL)	1. Contaminated brake fluid. 2. Binding caliper pins or bushings. 3. Binding master cylinder. 4. Binding brake pedal. 5. Brake lamp switch not adjusted properly and mounting bracket is bent.	1. Check for swollen seals. Replace all system components containing rubber. 2. Replace pins and bushings. 3. Replace master cylinder. 4. Replace brake pedal. 5. Straighten mounting bracket and replace brake lamp switch.
BRAKES DRAG (REAR ONLY)	1. Parking brake cables binding or froze up. 2. Parking brake cable return spring not returning shoes. 3. Service brakes not adjusted properly (rear drum brakes only). 4. Rear disc brake parking brake not properly adjusted.	1. Check cable routing. Replace cables as necessary. 2. Replace cables as necessary. 3. Follow the procedure listed in the adjustment section. Adjust parking brake shoes.
BRAKES GRAB	1. Contaminated brake shoe linings. 2. Improper power brake booster assist.	1. Inspect and clean, or replace shoes. Repair source of contamination. 2. Refer to power brake booster diagnosis and testing.
EXCESSIVE PEDAL EFFORT	1. Obstruction of brake pedal. 2. Low power brake booster assist (vacuum leak). 3. Glazed brake linings. 4. Brake shoe lining transfer to brake rotor.	1. Inspect, remove or move obstruction. 2. Refer to power brake booster diagnosis and testing. 3. Reface or replace brake rotors as necessary. Replace brake shoes. 4. Reface or replace brake rotors as necessary. Replace brake shoes.
EXCESSIVE PEDAL TRAVEL (VEHICLE STOPS OK)	1. Air in brake lines. 2. Rear drum brake auto-adjuster malfunctioning.	1. Bleed brakes. 2. Inspect and replace drum brake components as necessary. Adjust rear brakes.
EXCESSIVE PEDAL TRAVEL (ONE FRONT WHEEL LOCKS UP DURING HARD BRAKING)	1. One of the two hydraulic circuits to the front brakes is malfunctioning.	1. Inspect system for leaks. Check master cylinder for internal malfunction.

BRAKES - BASE (Continued)

CONDITION	POSSIBLE CAUSES	CORRECTION
PEDAL PULSATES/ SURGES DURING BRAKING	1. Rear brake drum out of round or disc brake rotor has excessive thickness variation.	1. Isolate condition as rear or front. Reface or replace brake drums or rotors as necessary.
PEDAL IS SPONGY	1. Air in brake lines. 2. Power brake booster runout (vacuum assist).	1. Bleed brakes. 2. Check booster vacuum hose and engine tune for adequate vacuum supply. Refer to power brake booster diagnosis and testing.
PREMATURE REAR WHEEL LOCKUP	1. Contaminated brake shoe linings. 2. Inoperative proportioning valve (non-ABS vehicles). 3. Improper power brake booster assist.	1. Inspect and clean, or replace shoes. Repair source of contamination. 2. Refer to proportioning valve diagnosis and testing. Replace valve as necessary. 3. Refer to power brake booster in the diagnosis and testing section.
STOP/BRAKE LAMPS STAY ON	1. Brake lamp switch out of adjustment. 2. Brake pedal binding. 3. Obstruction in pedal linkage. 4. Power Brake Booster not allowing pedal to return completely.	1. Replace brake lamp switch. 2. Inspect and replace as necessary. 3. Remove obstruction. 4. Replace power brake booster.
VEHICLE PULLS TO RIGHT OR LEFT ON BRAKING	1. Frozen brake caliper piston. 2. Contaminated brake shoe lining. 3. Pinched brake lines. 4. Leaking piston seal. 5. Suspension problem.	1. Replace frozen piston or caliper. Bleed brakes. 2. Inspect and clean, or replace shoes. Repair source of contamination. 3. Replace pinched line. 4. Replace piston seal or brake caliper. 5. Refer to the Suspension group.
PARKING BRAKE - EXCESSIVE HANDLE TRAVEL	1. Rear drum brakes or rear disc brake parking brake shoes out of adjustment.	1. Adjust rear drum brake shoes, or rear parking brake shoes on vehicles with rear disc brakes.

BRAKES - BASE (Continued)

STANDARD PROCEDURE - BASE BRAKE BLEEDING

NOTE: This bleeding procedure is only for the vehicle's base brakes hydraulic system. For bleeding the antilock brakes hydraulic system, (Refer to 5 - BRAKES - ABS - STANDARD PROCEDURE)

CAUTION: Before removing the master cylinder cover, thoroughly clean the cover and master cylinder fluid reservoir to prevent dirt and other foreign matter from dropping into the master cylinder fluid reservoir.

NOTE: The following wheel sequence should be used when bleeding the brake hydraulic system. The use of this wheel sequence will ensure adequate removal of all trapped air from the brake hydraulic system.

- Left Rear Wheel
- Right Front Wheel
- Right Rear Wheel
- Left Front Wheel

NOTE: When bleeding the brake system, some air may be trapped in the brake lines or valves far upstream, as much as ten feet from the bleeder screw (Fig. 1). Therefore, it is essential to have a fast flow of a large volume of brake fluid when bleeding the brakes to ensure all the air gets out.

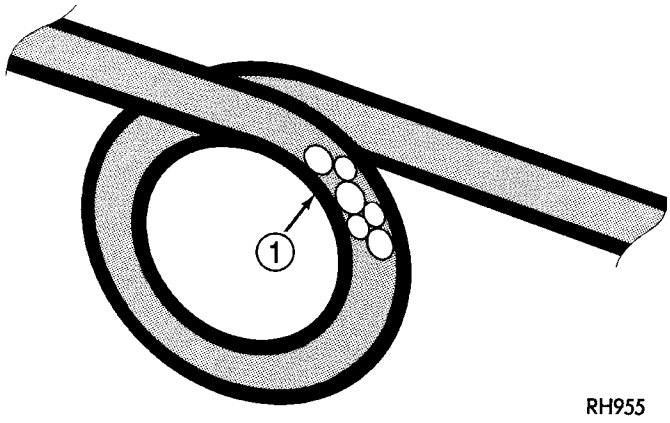

Fig. 1 Trapped Air In Brake Fluid Line

1 - TRAPPED AIR

The brakes may be manually bled or pressure bled. Refer to the appropriate following procedure.

MANUAL BLEEDING PROCEDURE

NOTE: Correct manual bleeding of the brakes hydraulic system will require the aid of a helper.

NOTE: To adequately bleed the brakes using the manual bleeding procedure the rear brakes must be correctly adjusted. Prior to the manual bleeding of the brake hydraulic system, correctly adjust the rear brakes.

(1) Pump the brake pedal three or four times and hold it down before the bleeder screw is opened.

(2) Push the brake pedal toward the floor and hold it down. Then open the left rear bleeder screw at least 1 full turn. When the bleeder screw opens the brake pedal will drop all the way to the floor.

CAUTION: "Just cracking" the bleeder screw often restricts fluid flow, allowing only a slow, weak fluid discharge of fluid. This practice will NOT get all the air out. Make sure the bleeder is opened at least 1 full turn when bleeding.

(3) Release the brake pedal only **after** the bleeder screw is closed.

(4) Repeat steps 1 through 3, four or five times, at each bleeder screw in the proper sequence. This should pass a sufficient amount of fluid to expel all the trapped air from the brake system. Be sure to monitor the fluid level in the master cylinder, so it stays at a proper level so air will not enter the brake system through the master cylinder.

(5) Check pedal travel. If pedal travel is excessive or has not been improved, enough fluid has not passed through the system to expel all the trapped air. Continue to bleed system as necessary.

(6) Perform a final adjustment of the rear brake shoes (when applicable), then test drive vehicle to be sure brakes are operating correctly and that pedal is solid.

PRESSURE BLEEDING PROCEDURE

CAUTION: Use bleeder tank Special Tool C-3496-B or equivalent with Adapter, Special Tool 6921, to pressurize the hydraulic system for bleeding.

BRAKES - BASE (Continued)

Follow pressure bleeder manufacturer's instructions for use of pressure bleeding equipment.

(1) Install the Adapter Master Cylinder Pressure Bleed Cap, Special Tool 6921 on the fluid reservoir of the master cylinder (Fig. 2). Attach the fluid hose from the pressure bleeder to the fitting on Special Tool 6921.

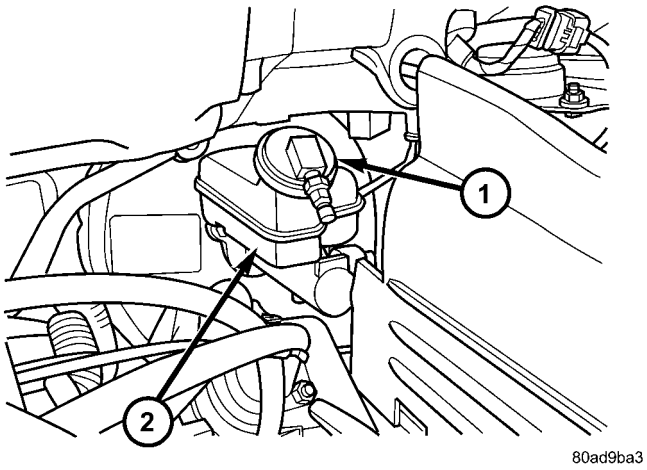

Fig. 2 Tool 6921 Installed On Master Cylinder

1 - SPECIAL TOOL 6921
2 - FLUID RESERVOIR

(2) Attach a clear plastic hose to the bleeder screw at one wheel and feed the hose into a clear jar containing fresh brake fluid.

(3) Open the left rear wheel bleeder screw at least **one full turn** or more to obtain an adequate flow of brake fluid.

CAUTION: "Just cracking" the bleeder screw often restricts fluid flow, allowing only a slow, weak fluid discharge of fluid. This practice will NOT get all the air out. Make sure the bleeder is opened at least 1 full turn when bleeding.

(4) After 4 to 8 ounces of brake fluid has been bled through the hydraulic system, and an air-free flow is maintained in the hose and jar, this will indicate a good bleed of the hydraulic system has been obtained.

(5) Repeat the procedure at all the other remaining bleeder screws.

(6) Check pedal travel. If pedal travel is excessive or has not been improved, enough fluid has not passed through the system to expel all the trapped air. Be sure to monitor the fluid level in the pressure bleeder, so it stays at a proper level so air will not enter the brake system through the master cylinder.

(7) Perform a final adjustment of the rear brake shoes (when applicable), then test drive vehicle to be sure brakes are operating correctly and that pedal is solid.

SPECIFICATIONS

BRAKE FASTENER TORQUE

DESCRIPTION	N·m	Ft. Lbs.	In. Lbs.
ABS ICU Mounting Bolts To Bracket	11	—	97
ABS ICU Mounting Bracket-To-Cradle Bolts	28	21	250
ABS CAB-To-HCU Mounting Screws	2	—	17
ABS Wheel Speed Sensor Head Mounting Bolt - Front	13	—	115
ABS Wheel Speed Sensor Head Mounting Bolt - Rear	10	—	90
Adjustable Pedal Position Sensor Mounting Screws	7.5	66	—
Adjustable Pedal Module Mounting Screws	2.0	15	—
Brake Tube Nuts	17	—	145
Brake Hose Intermediate Bracket Bolt	12	—	105
Brake Hose-To-Caliper Mounting Bolt	47	35	—
Disc Brake Caliper Guide Pin Bolts	35	26	—
Disc Brake Caliper Bleeder Screw	15	—	125
Drum Brake Wheel Cylinder Mounting Bolts	8	—	75
Drum Brake Wheel Cylinder Mounting Bleeder screw	10	—	80
Drum Brake Support Plate Mounting Bolts	130	95	—
Junction Block (Non-ABS Brakes) Mounting Bolts	28	21	250
Master Cylinder Mounting Nuts	25	19	225
Power Brake Booster Mounting Nuts	28	21	250
Proportioning Valve Mounting Bolts	54	40	—
Proportioning Valve Axle Bracket Mounting Bolt	20	—	175
Parking Brake Lever (Pedal) Mounting Bolts And Nut	28	21	250
Wheel Mounting (Lug) Nuts	135	100	—

BRAKES - BASE (Continued)

SPECIAL TOOLS

BASE BRAKE SYSTEM

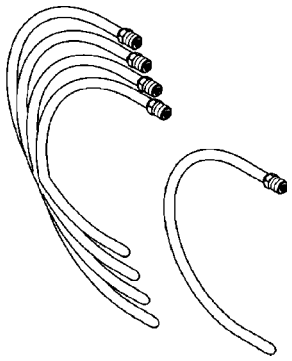

Tubes, Master Cylinder Bleed 8358

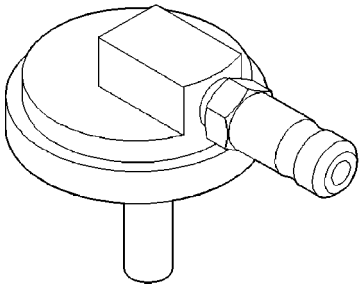

Adapter, Master Cylinder Pressure Bleed Cap 6921

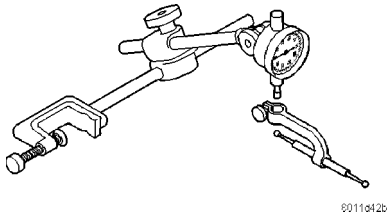

Dial Indicator, C-3339

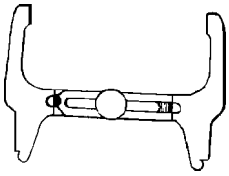

Gauge, Brake Shoe C-3919

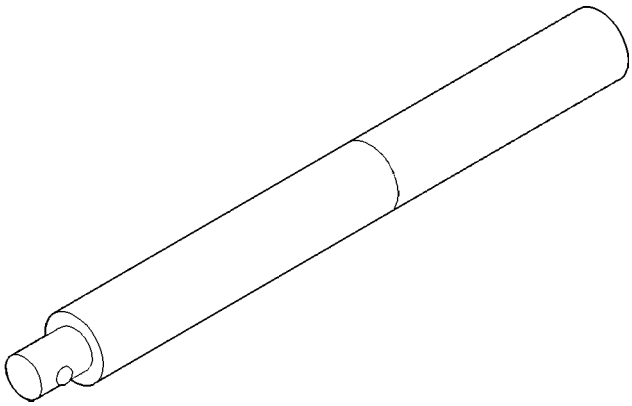

Handle, Universal C–4171

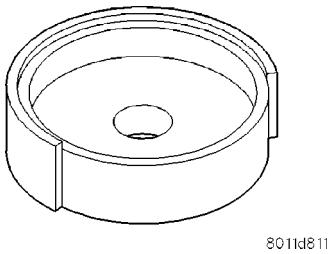

Installer, Dust Boot C-4689 or C-4842

BRAKE FLUID LEVEL SWITCH

DESCRIPTION

The brake fluid level switch is located in the brake fluid reservoir of the master cylinder (Fig. 3).

OPERATION

The purpose of the brake fluid level switch is to provide the driver with an early warning that the brake fluid level in the master cylinder fluid reservoir has dropped below a normal level. This may indicate:

- Abnormal loss of brake fluid in the master cylinder fluid reservoir resulting from a leak in the hydraulic system.
- Brake shoe linings which have worn to a point requiring replacement.

As the brake fluid drops below the minimum level, the brake fluid level switch closes to complete the red BRAKE warning indicator (lamp) circuit. This will turn on the red BRAKE warning indicator. The master cylinder fluid reservoir should be checked and refilled to the Full mark with DOT 3 brake fluid. **If the brake fluid level has dropped below the add line in the master cylinder fluid reservoir, the entire brake hydraulic system should be checked for evidence of a leak.**

BRAKE FLUID LEVEL SWITCH (Continued)

REMOVAL

(1) Remove wiring harness connector from brake fluid reservoir level switch (Fig. 3).

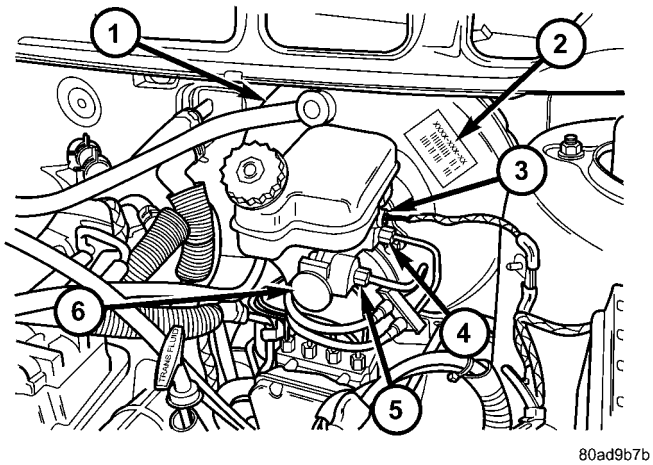

Fig. 3 MASTER CYLINDER AND BOOSTER

1 - POWER BRAKE BOOSTER
2 - BOOSTER IDENTIFICATION LABEL
3 - FLUID LEVEL SWITCH CONNECTOR
4 - PRIMARY BRAKE TUBE NUT
5 - SECONDARY BRAKE TUBE NUT
6 - MASTER CYLINDER

(2) Using fingers, compress the retaining tabs on the opposite end of brake fluid level switch.

(3) With retaining tabs compressed, grasp the connector end of brake fluid level switch and pull it out of master cylinder brake fluid reservoir.

INSTALLATION

(1) Insert brake fluid level switch into left side of brake fluid reservoir. Be sure switch is pushed in until retaining tabs lock it to brake fluid reservoir.

(2) Connect vehicle wiring harness connector to brake fluid level switch (Fig. 3).

ADJUSTABLE PEDALS SWITCH

REMOVAL

The adjustable pedals switch is located in the steering column lower shroud. Remove the shroud, then remove the switch. (Refer to 19 - STEERING/ COLUMN/LOWER SHROUD - REMOVAL)

INSTALLATION

The adjustable pedals switch is located in the steering column lower shroud. Install the switch in the shroud, then install the shroud. (Refer to 19 - STEERING/COLUMN/LOWER SHROUD - INSTALLATION)

Once installed, test for proper operation of the adjustable pedals.

HYDRAULIC/MECHANICAL

DESCRIPTION

DESCRIPTION - DISC BRAKES (FRONT)

Each front disc brake consists of the following components:

- Brake Rotor
- Brake Caliper
- Brake Caliper Adapter
- Shoes (Pads)

There are two non-interchangeable front disc brake systems. One is manufactured by TRW and the other by Continental Teves.

CAUTION: Components used on the TRW brakes are not interchangeable with the Continental Teves brakes. The two different systems must not be mixed. Improper performance, noise and increased stopping distance can occur.

The TRW front brake caliper is a one piece casting containing a single 66 mm diameter piston bore (Fig. 4) with a phenolic piston. The caliper mounts to a caliper adapter using two guide pin bolts that thread into guide pins slid into the caliper adapter (Fig. 5). The pins are lubricated and have boots that seal them in place in the adapter.

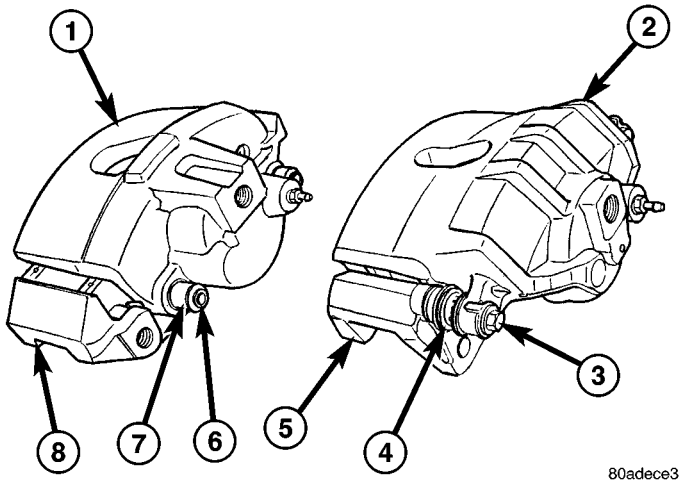

Fig. 4 Front Disc Brake Calipers

1 - CONTINENTAL TEVES CALIPER (66 mm bore)
2 - TRW CALIPER (66 mm bore)
3 - GUIDE PIN BOLT
4 - GUIDE PIN AND BOOT
5 - CALIPER ADAPTER
6 - GUIDE PIN BOLT
7 - GUIDE PIN BUSHING
8 - CALIPER ADAPTER

HYDRAULIC/MECHANICAL (Continued)

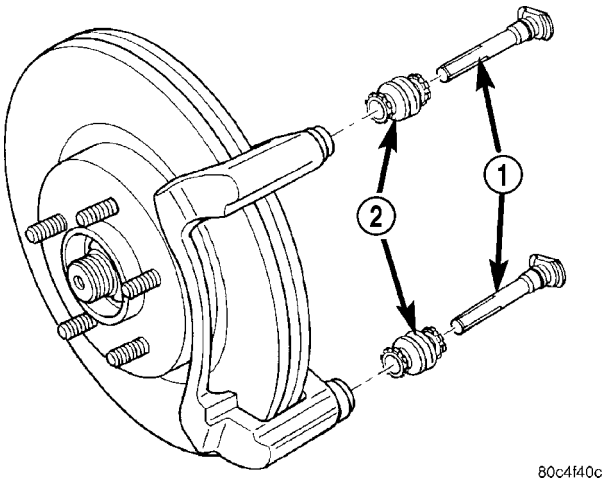

Fig. 5 Guide Pins And Boots

1 - PINS
2 - BOOTS

The Continental Teves front brake caliper is a one piece casting containing a single piston 66 mm diameter bore (Fig. 4) with a phenolic piston. The caliper mounts to a caliper adapter using two guide pin bolts that thread into the caliper adapter and slide on bushings mounted in the caliper.

CAUTION: TRW and Continental Teves calipers are not interchangeable. Each caliper is specifically designed for the unique brake system. If calipers are interchanged, improper performance, noise and increased stopping distance can occur.

The two different brake calipers use different devices to control rattling. While the TRW brakes use spring clips that mount at the ends of the shoes in the adapters, Continental Teves brakes use a clip on the rear of the inboard pad to hold it to the piston and a larger clip on the outside of the caliper, holding it to the adapter (Fig. 6).

All brake caliper adapters mount to the steering knuckle in the same way using two mounting bolts.

The brake rotors are also different depending on brake system. The TRW front brakes utilize an inverted-hat style rotor. This rotor is externally vented meaning the inner most diameter of the braking disc vents to the outboard side (or face) of the rotor (Fig. 7). The Continental Teves front brakes utilize the familiar internally-vented hat style rotor. Internally-vented refers to the fact that the inner most diameter of the braking disc vents to the inboard side of the rotor (Fig. 7).

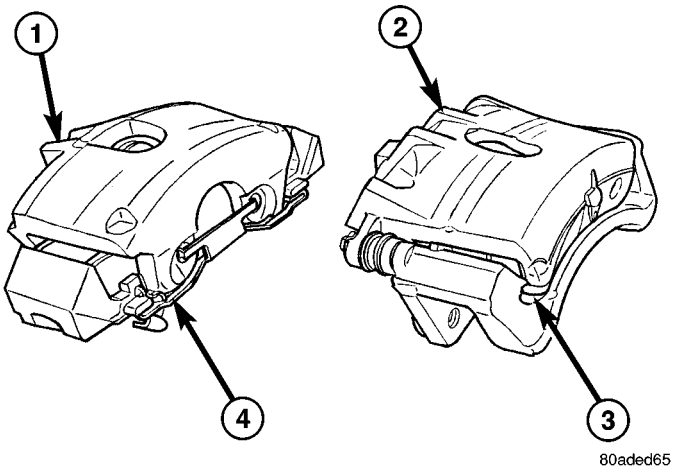

Fig. 6 Anti-Rattle Devices On Calipers

1 - CONTINENTAL TEVES CALIPER
2 - TRW CALIPER
3 - ANTI-RATTLE CLIP
4 - ANTI-RATTLE CLIP

CAUTION: Do not mix rotor types on the same vehicle. If brake rotors are mixed, noise and wear problems can result.

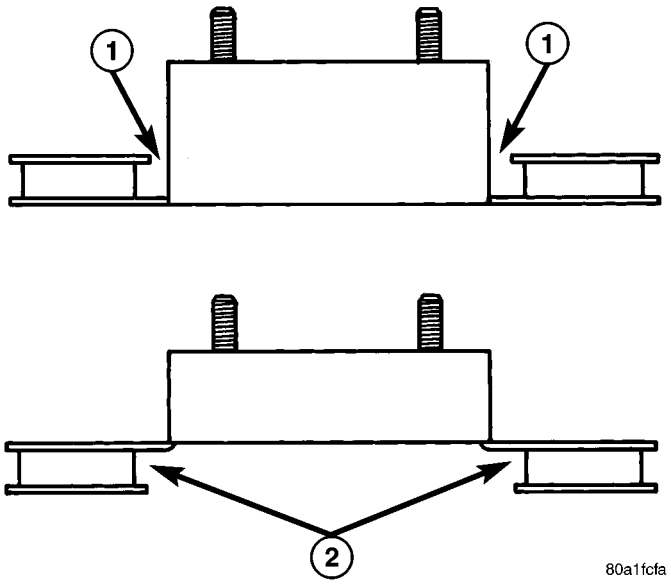

Fig. 7 Externally and Internally Vented Rotors (Cross-Sectional View)

1 - EXTERNAL VENTS (TRW and Continental Teves BR3)
2 - INTERNAL VENTS (Continental Teves BRE)

HYDRAULIC/MECHANICAL (Continued)

DESCRIPTION - DISC BRAKES (REAR)

There are several distinctive features to the rear disc brakes on this vehicle (Fig. 8). The single piston, floating caliper rear disc brake system includes a hub and bearing assembly, adapter, rotor, caliper, and brake shoes.

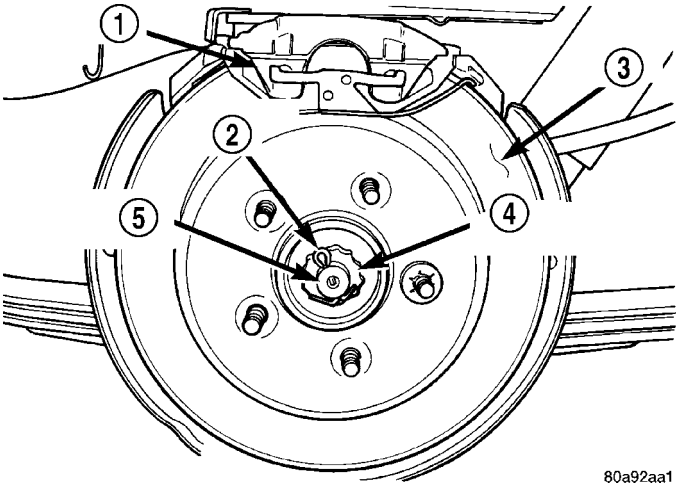

Fig. 8 Rear Disc Brakes

1 - CALIPER
2 - COTTER PIN
3 - ROTOR
4 - NUT RETAINER
5 - OUTER C/V JOINT

This vehicle is equipped with a caliper having a 42 mm (1.65 in.) piston and uses a 15 inch solid non-vented brake rotor. The brake rotor is described as a drum-in-hat style because of its dual role as a braking disc and parking brake drum.

The parking brake system on vehicles equipped with rear disc brakes consists of a small duo-servo drum brake mounted to the caliper adapter and uses the interior of the rear disc brake rotor as a drum (hat section of drum-in-hat style brake rotor).

The outboard rear disc brake shoes (pads) are side-oriented. The shoes are marked indicating which side they belong on.

DESCRIPTION - DISC BRAKES (EXPORT)

All vehicles are equipped with Four-Wheel-Disc brakes. Both 15” (BRE) and 16” (BR3) disc/disc brake systems are available. The disc brakes are manufactured by Continental Teves. The BR3 system is standard equipment on all-wheel drive and all right-hand drive models. It is optional on other models.

The BR3 system features larger, externally vented front brake rotors.

Although there are different disc/disc systems, they are serviced using the same service procedures. Some specifications differ.

DESCRIPTION - DRUM BRAKES (REAR)

This vehicle’s rear wheel drum brakes are a two-shoe, internal-expanding type with an automatic adjuster screw. The automatic adjuster screw is located directly below the wheel cylinder that is mounted near the top of the brake assembly (Fig. 9). These and two brake shoes (and attaching parts) are mounted to a support plate at each rear wheel. A brake drum covers each brake assembly.

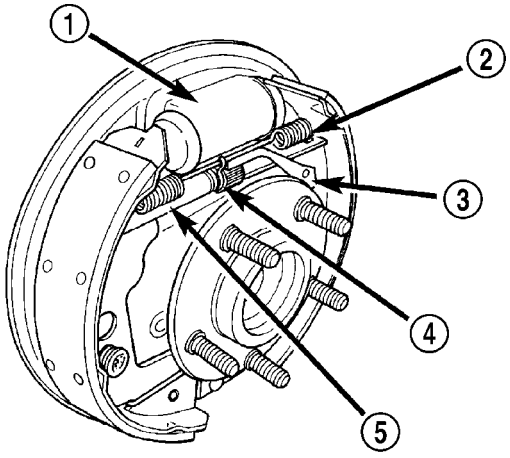

Fig. 9 Drum Brake Assembly (Right Shown)

1 - WHEEL CYLINDER
2 - BRAKE SHOE UPPER RETURN SPRING
3 - AUTOMATIC ADJUSTER LEVER
4 - TENSION CLIP
5 - AUTOMATIC ADJUSTER ASSEMBLY

OPERATION

OPERATION - DISC BRAKES (FRONT)

When the brakes are applied, fluid pressure is sent to each brake caliper. The pressure at the caliper is exerted equally against the caliper piston. The pressure applied to the piston is transmitted directly to the inboard brake shoe. This forces the shoe lining against the inner surface of the brake rotor. At the same time, fluid pressure within the caliper piston bore forces the caliper to slide inward on its guide pins. This action brings the outboard shoe lining into contact with the outer surface of the brake rotor. This pressure on both sides of the brake rotor causes friction, bringing the vehicle to a stop.

When the brake pedal is released, so is the fluid pressure. The piston seal inside the caliper is designed to pull the piston back into the bore of the caliper when the brake pedal is released (Fig. 10). This action helps maintain the proper brake shoe-to-rotor clearance.

HYDRAULIC/MECHANICAL (Continued)

As disc brake shoe linings wear, master cylinder reservoir brake fluid level will drop. Adjust as necessary. Fluid level should always be checked after replacing shoes.

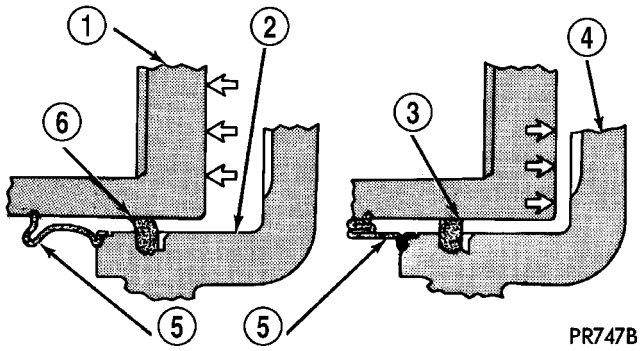

Fig. 10 Caliper Piston Seal Function For Automatic Adjustment

1 - PISTON
2 - CYLINDER BORE
3 - PISTON SEAL BRAKE PRESSURE OFF
4 - CALIPER HOUSING
5 - DUST BOOT
6 - PISTON SEAL BRAKE PRESSURE ON

OPERATION - DISC BRAKES (REAR)

The rear disc brakes operate similarly to front disc brakes, however, there are some features that require different service procedures.

DIAGNOSIS AND TESTING - DRUM BRAKE AUTOMATIC ADJUSTER

The rear drum brakes on this vehicle automatically adjust when required during the normal operation of the vehicle every time the brakes are applied. Use the following procedure to test the operation of the automatic adjuster.

Place the vehicle on a hoist with a helper in the driver's seat to apply the brakes. Remove the access plug from the adjustment hole in each brake support plate to provide visual access of the brake adjuster star wheel.

To eliminate the condition where maximum adjustment of the rear brake shoes does not allow the automatic adjuster to operate when tested, back the star wheel off approximately 30 notches. It will be necessary to hold the adjuster lever away from the star wheel to permit this adjustment.

Have the helper apply the brakes. Upon application of the brake pedal, the adjuster lever should move down, turning the adjuster star wheel. Thus, a definite rotation of the adjuster star wheel can be observed if the automatic adjuster is working properly. If one or more adjusters do not function properly, the respective drum must be removed for adjuster servicing.

BRAKE LINES

DESCRIPTION - BRAKE TUBES AND HOSES

The brake tubes are steel with a corrosion-resistant nylon coating applied to the external surfaces. The flex hoses are made of reinforced rubber with fittings at each end.

The primary and secondary brake tubes leading from the master cylinder to the ABS ICU Hydraulic Control Unit (HCU) or the non-ABS junction block have a special flexible section. This flexible section is required due to cradle movement while the vehicle is in motion (The ICU and non-ABS junction block are mounted to the cradle). **If replacement of these lines is necessary, only the original factory brake line containing the flexible section must be used**.

OPERATION - BRAKE TUBES AND HOSES

The purpose of the chassis brake tubes and flex hoses is to transfer the pressurized brake fluid developed by the master cylinder to the wheel brakes of the vehicle. The flex hoses are made of rubber to allow for the movement of the vehicle's suspension.

INSPECTION - BRAKE TUBES AND HOSES

Flexible rubber hose is used at both front brakes and at the rear axle. Inspection of brake hoses should be performed whenever the brake system is serviced and every 7,500 miles or 12 months, whichever comes first (every engine oil change). Inspect hydraulic brake hoses for surface cracking, scuffing, or worn spots. If the fabric casing of the rubber hose becomes exposed due to cracks or abrasions in the rubber hose cover, the hose should be replaced immediately. Eventual deterioration of the hose can take place with possible burst failure. Faulty installation can cause twisting, resulting in wheel, tire, or chassis interference.

The brake tubing should be inspected periodically for evidence of physical damage or contact with moving or hot components.

The flexible brake tube sections used on this vehicle in the primary and secondary tubes from the master cylinder to the ABS hydraulic control unit connections must also be inspected. This flexible tubing must be inspected for kinks, fraying and contact with other components or with the body of the vehicle.

BRAKE PADS/SHOES - FRONT

REMOVAL

REMOVAL - FRONT DISC BRAKE SHOES (CONTINENTAL TEVES BRAKES)

(1) Raise the vehicle. (Refer to LUBRICATION & MAINTENANCE/HOISTING - STANDARD PROCEDURE).

(2) Remove both front wheel and tire assemblies.

(3) Begin on one side of the vehicle.

(4) Remove the anti-rattle clip from the outboard side of the caliper and adapter.

(5) Remove the two caliper guide pin bolts.

(6) Remove caliper from caliper adapter and brake rotor.

CAUTION: Supporting weight of caliper by the flexible brake fluid hose can damage the hose.

(7) Using wire or cord, hang the caliper from the front strut assembly (Fig. 11). Support the caliper firmly to prevent weight of caliper from being supported by the brake fluid hose.

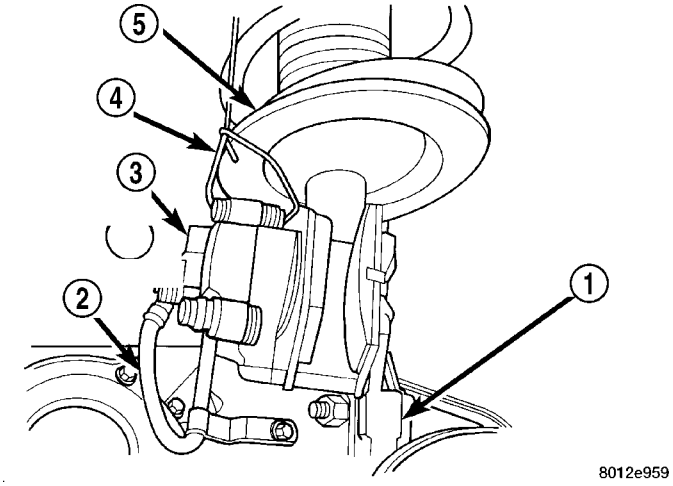

Fig. 11 Stored Front Disc Brake Caliper

1 - STEERING KNUCKLE
2 - BRAKE FLEX HOSE
3 - CALIPER ASSEMBLY
4 - WIRE HANGER
5 - STRUT ASSEMBLY

(8) Remove the outboard brake shoe from the caliper adapter.

(9) Pull the inboard brake shoe away from the caliper piston until the retaining clip on shoe is free from the cavity in the caliper piston (Fig. 12).

(10) Repeat the above procedure on other side of the vehicle.

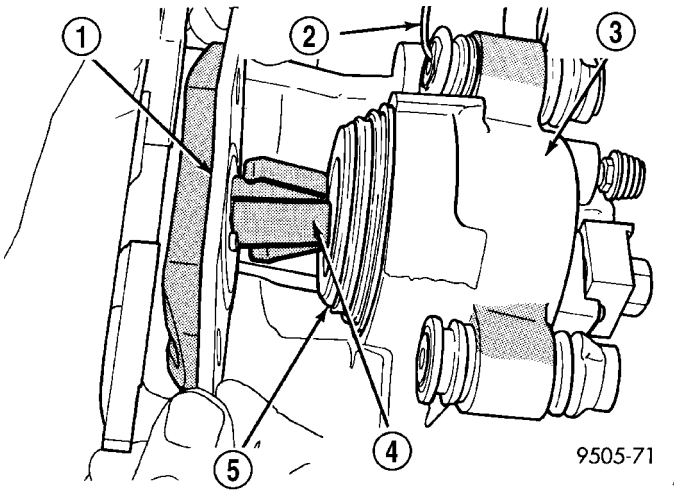

Fig. 12 Removing Inboard Shoe

1 - INBOARD BRAKE SHOE
2 - HANGER WIRE
3 - CALIPER ASSEMBLY
4 - RETAINING CLIP
5 - PISTON

REMOVAL - FRONT DISC BRAKE SHOES (TRW BRAKES)

(1) Raise the vehicle. Refer to HOISTING in LUBRICATION AND MAINTENANCE.

NOTE: Perform Step 2 through Step 5 on each side of the vehicle.

(2) Remove the front tire and wheel assembly.

(3) Remove the two brake caliper guide pin bolts (Fig. 13).

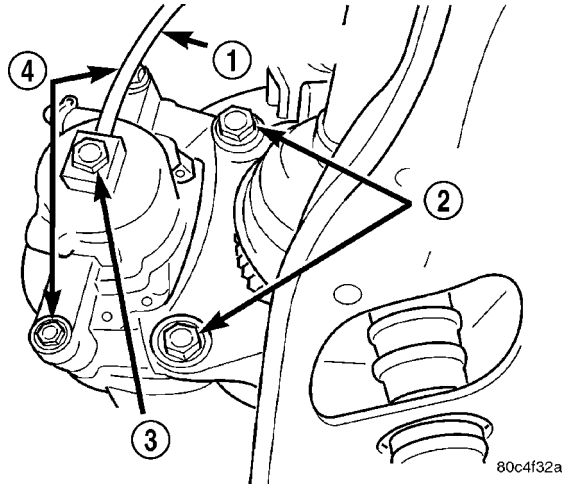

Fig. 13 Brake Caliper Mounting (Typical)

1 - BRAKE HOSE
2 - ADAPTER MOUNTING BOLTS
3 - BANJO BOLT
4 - CALIPER GUIDE PIN BOLTS

BRAKE PADS/SHOES - FRONT (Continued)

(4) Remove the disc brake caliper from the disc brake adapter and hang out of the way using wire or a bungee cord. Use care not to overextend the brake hose when doing this.

(5) Remove the brake shoes from the disc brake caliper adapter.

CLEANING - DISC BRAKE SHOES

WARNING: DUST AND DIRT ACCUMULATING ON BRAKE PARTS DURING NORMAL USE MAY CONTAIN ASBESTOS FIBERS FROM PRODUCTION OR AFTERMARKET BRAKE LININGS. BREATHING EXCESSIVE CONCENTRATIONS OF ASBESTOS FIBERS CAN CAUSE SERIOUS BODILY HARM. EXERCISE CARE WHEN SERVICING BRAKE PARTS. DO NOT SAND OR GRIND BRAKE LINING UNLESS EQUIPMENT USED IS DESIGNED TO CONTAIN THE DUST RESIDUE. DO NOT CLEAN BRAKE PARTS WITH COMPRESSED AIR OR BY DRY BRUSHING. CLEANING SHOULD BE DONE BY DAMPENING THE BRAKE COMPONENTS WITH A FINE MIST OF WATER, THEN WIPING THE BRAKE COMPONENTS CLEAN WITH A DAMPENED CLOTH. DISPOSE OF CLOTH AND ALL RESIDUE CONTAINING ASBESTOS FIBERS IN AN IMPERMEABLE CONTAINER WITH THE APPROPRIATE LABEL. FOLLOW PRACTICES PRESCRIBED BY THE OCCUPATIONAL SAFETY AND HEALTH ADMINISTRATION (OSHA) AND THE ENVIRONMENTAL PROTECTION AGENCY (EPA) FOR THE HANDLING, PROCESSING, AND DISPOSING OF DUST OR DEBRIS THAT MAY CONTAIN ASBESTOS FIBERS.

INSPECTION - DISC BRAKE SHOES

Visually inspect brake shoes (pads) for uneven lining wear. Also inspect for excessive lining deterioration. Check the clearance between the tips of the wear indicators on the shoes (if equipped) and the brake rotors.

If a visual inspection does not adequately determine the condition of the lining, a physical check will be necessary. To check the amount of lining wear, remove the disc brake shoes from the calipers.

Measure each brake shoe. The combined brake shoe and its lining material thickness should be measured at its thinnest point.

- For front disc brake shoes, when a set of brake shoes are worn to a thickness of approximately 7.95 mm (5/16 inch), they should be replaced.
- For rear disc brake shoes, when a set of brake shoes are worn to a thickness of approximately 7.0 mm (9/32 inch), they should be replaced.
- Typically, if front shoes are worn out, both fronts and rears need to be replaced. Make sure to check rears.

Replace **both** disc brake shoes (inboard and outboard) on each caliper. It is necessary to replace the shoes on the opposite side of the vehicle as well as the shoes failing inspection.

If the brake shoe assemblies do not require replacement, be sure to reinstall the brake shoes in the original position they were removed from.

INSTALLATION

INSTALLATION - FRONT DISC BRAKE SHOES (CONTINENTAL TEVES BRAKES)

NOTE: There may be more than 1 lining material released. Make sure proper linings are being installed.

(1) Begin on one side of the vehicle or the other.

(2) Completely retract the caliper piston back into its bore in the brake caliper (This is required for caliper installation on the brake rotor with new brake shoes installed).

(3) If applied, remove the protective paper from the noise suppression gasket on the rear of both the inner and outer brake shoe assemblies.

(4) Install the new inboard brake shoe into the caliper piston by firmly pressing its retaining clip into the piston bore. Be sure the inboard brake shoe is positioned squarely against the face of the caliper piston.

(5) Lubricate both adapter abutments where the shoes slide with a small amount of Mopar® Dielectric grease, or equivalent.

(6) Slide the new outboard brake shoe into the caliper adapter with the lining up against the outside of the brake rotor.

CAUTION: Use care when installing the caliper assembly onto the caliper adapter, so the caliper guide pin bushings do not get damaged by the adapter bosses.

(7) Carefully position the brake caliper over the brake rotor and adapter.

(8) Install the caliper guide pin bolts and tighten to a torque of 35 N·m (26 ft. lbs.). **Extreme caution should be taken not to cross thread the caliper guide pin bolts.**

(9) Install the caps over the caliper guide pin bolts.

(10) Install the new caliper hold down spring (anti-rattle clip) on the outboard side of the caliper. Start the spring into the holes on the caliper, then stretch the clip legs past the abutments on the caliper adapter.

(11) Repeat the above procedure on other side of the vehicle.

BRAKE PADS/SHOES - FRONT (Continued)

(12) Install the wheel and tire assemblies. Tighten the wheel mounting nuts in proper sequence until all nuts are torqued to half specification, then repeat the tightening sequence to the full specified torque of 135 N·m (100 ft. lbs.).

(13) Lower vehicle.

(14) Pump the brake pedal several times. This will set the shoes to the brake rotor.

(15) Check and adjust brake fluid level as necessary.

(16) Road test the vehicle and make several stops to wear off any foreign material on the brakes and to seat the brake shoes.

INSTALLATION - FRONT DISC BRAKE SHOES (TRW BRAKES)

NOTE: Perform steps Step 1 through Step 5on each side of the vehicle.

(1) Place the brake shoes in the adapter anti-rattle clips.

(2) Completely retract the caliper piston back into the bore of the caliper.

CAUTION: Use care when installing the caliper onto the disc brake adapter to avoid damaging the boots on the caliper guide pins.

(3) Install the disc brake caliper over the brake shoes on the brake caliper adapter.

(4) Align the caliper guide pin bolt holes with the guide pins. Install the caliper guide pin bolts and tighten them to a torque of 35 N·m (26 ft. lbs.) (Fig. 13).

(5) Install the tire and wheel assembly. Tighten the wheel mounting nuts to a torque of 135 N·m (100 ft. lbs.).

(6) Lower the vehicle.

(7) Pump the brake pedal several times. This will set the shoes to the brake rotor.

(8) Check and adjust the brake fluid level as necessary.

(9) Road test the vehicle and make several stops to wear off any foreign material on the brakes and to seat the brake shoes.

BRAKE PADS/SHOES - REAR DISC

REMOVAL - REAR DISC BRAKE SHOES

(1) Raise vehicle. (Refer to LUBRICATION & MAINTENANCE/HOISTING - STANDARD PROCEDURE).

(2) Remove rear wheel and tire assemblies from vehicle.

(3) Remove the caliper to adapter guide pin bolts (Fig. 14).

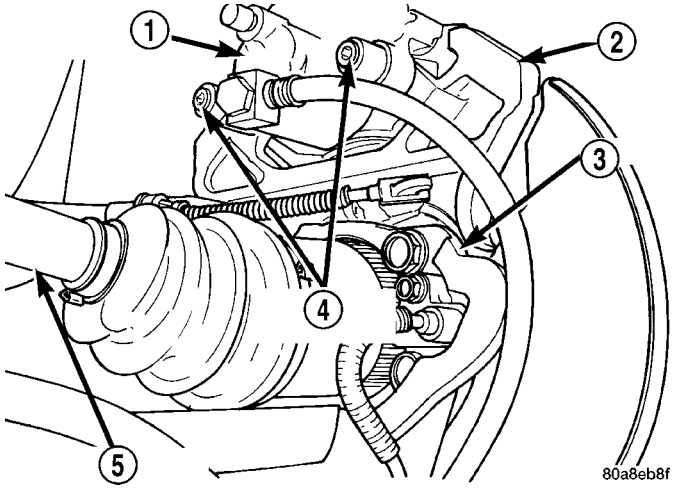

Fig. 14 Caliper Guide Pin Bolts

1 - DISC BRAKE CALIPER
2 - ADAPTER
3 - AXLE
4 - GUIDE PIN BOLTS
5 - DRIVESHAFT (AWD MODELS ONLY)

(4) Remove rear caliper from adapter using the following procedure. First rotate front of caliper up from the adapter. Then pull the rear of the caliper and the outboard brake shoe anti-rattle clip out from under the rear abutment on the adapter (Fig. 15).

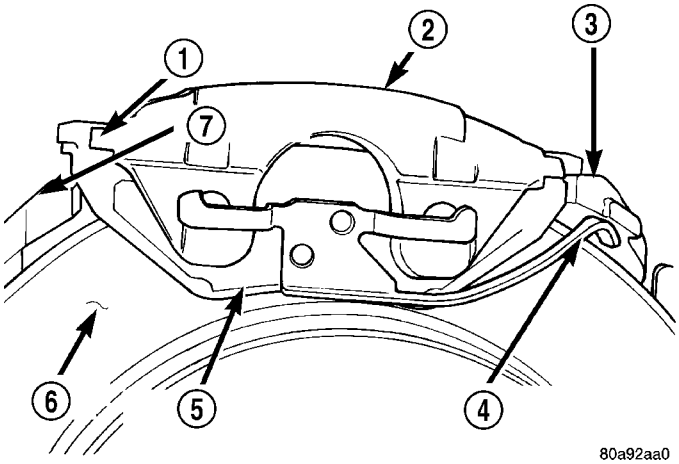

Fig. 15 Removing/Installing Caliper

1 - LIFT THIS END OF CALIPER AWAY FROM ADAPTER FIRST
2 - DISC BRAKE CALIPER
3 - ADAPTER ABUTMENT
4 - OUTBOARD BRAKE SHOE HOLD DOWN CLIP
5 - OUTBOARD BRAKE SHOE
6 - ROTOR
7 - ADAPTER

BRAKE PADS/SHOES - REAR DISC (Continued)

(5) Support caliper to prevent the weight of the caliper from damaging the flexible brake hose (Fig. 16).

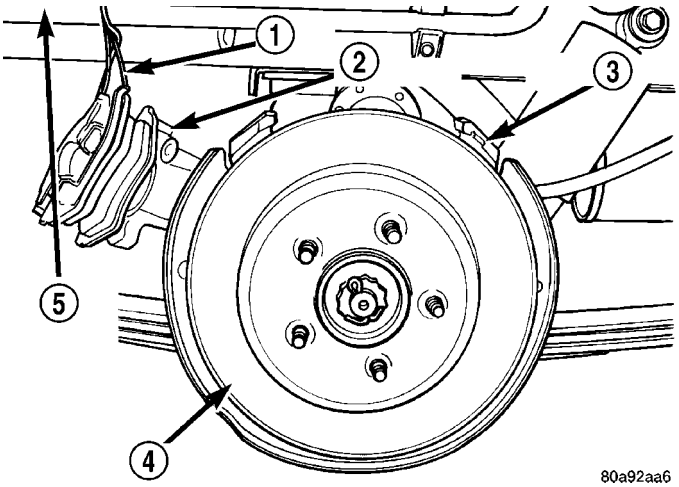

Fig. 16 Correctly Supported Caliper

1 - WIRE
2 - CALIPER
3 - ADAPTER
4 - ROTOR
5 - INNER FENDER

(6) If the brake rotor needs to be removed it can be removed by removing the retainer clips and then pulling the rotor straight off the wheel mounting studs.

(7) Remove the outboard brake shoe from the caliper. Brake shoe is removed by pushing the shoe toward the piston, disengaging the two metal protrusions on the shoe back, then sliding the brake shoe off the caliper.

(8) Remove inboard brake shoe from caliper. Inboard brake shoe is removed by pulling it out of the caliper piston, until the retaining clip is free of the piston (Fig. 17).

CLEANING - DISC BRAKE SHOES

WARNING: DUST AND DIRT ACCUMULATING ON BRAKE PARTS DURING NORMAL USE MAY CONTAIN ASBESTOS FIBERS FROM PRODUCTION OR AFTERMARKET BRAKE LININGS. BREATHING EXCESSIVE CONCENTRATIONS OF ASBESTOS FIBERS CAN CAUSE SERIOUS BODILY HARM. EXERCISE CARE WHEN SERVICING BRAKE PARTS. DO NOT SAND OR GRIND BRAKE LINING UNLESS EQUIPMENT USED IS DESIGNED TO CONTAIN THE DUST RESIDUE. DO NOT CLEAN BRAKE PARTS WITH COMPRESSED AIR OR BY DRY BRUSHING. CLEANING SHOULD BE DONE BY DAMPENING THE BRAKE COMPONENTS WITH A FINE MIST OF WATER, THEN WIPING THE BRAKE COMPONENTS CLEAN WITH A DAMPENED CLOTH.

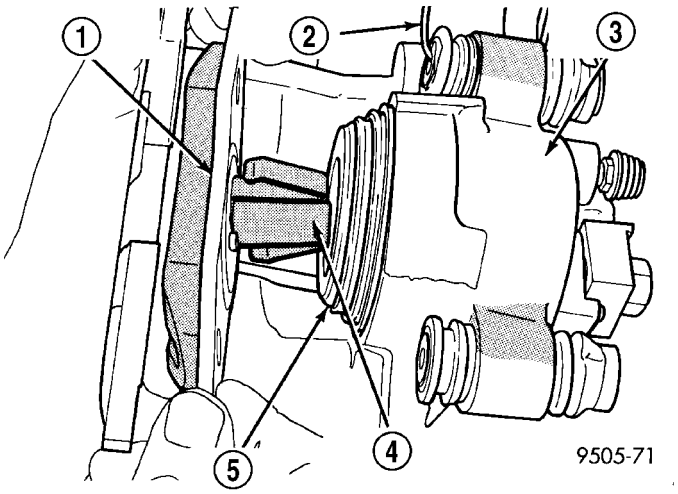

Fig. 17 Removing Inboard Brake Shoe

1 - INBOARD BRAKE SHOE
2 - HANGER WIRE
3 - CALIPER ASSEMBLY
4 - RETAINING CLIP
5 - PISTON

DISPOSE OF CLOTH AND ALL RESIDUE CONTAINING ASBESTOS FIBERS IN AN IMPERMEABLE CONTAINER WITH THE APPROPRIATE LABEL. FOLLOW PRACTICES PRESCRIBED BY THE OCCUPATIONAL SAFETY AND HEALTH ADMINISTRATION (OSHA) AND THE ENVIRONMENTAL PROTECTION AGENCY (EPA) FOR THE HANDLING, PROCESSING, AND DISPOSING OF DUST OR DEBRIS THAT MAY CONTAIN ASBESTOS FIBERS.

INSPECTION - DISC BRAKE SHOES

Visually inspect brake shoes (pads) for uneven lining wear. Also inspect for excessive lining deterioration. Check the clearance between the tips of the wear indicators on the shoes (if equipped) and the brake rotors.

If a visual inspection does not adequately determine the condition of the lining, a physical check will be necessary. To check the amount of lining wear, remove the disc brake shoes from the calipers.

Measure each brake shoe. The combined brake shoe and its lining material thickness should be measured at its thinnest point.

- For front disc brake shoes, when a set of brake shoes are worn to a thickness of approximately 7.95 mm (5/16 inch), they should be replaced.
- For rear disc brake shoes, when a set of brake shoes are worn to a thickness of approximately 7.0 mm (9/32 inch), they should be replaced.
- Typically, if front shoes are worn out, both fronts and rears need to be replaced. Make sure to check rears.

Replace **both** disc brake shoes (inboard and outboard) on each caliper. It is necessary to replace the

shoes on the opposite side of the vehicle as well as the shoes failing inspection.

If the brake shoe assemblies do not require replacement, be sure to reinstall the brake shoes in the original position they were removed from.

INSTALLATION - REAR DISC BRAKE SHOES

(1) Completely retract caliper piston back into piston bore of caliper assembly.

(2) Lubricate both adapter abutments where the shoes contact with a liberal amount of Mopar® Multipurpose Lubricant, or equivalent.

(3) If removed, install the brake rotor on the hub, making sure it is squarely seated on the face of the hub.

(4) Install the inboard brake shoe into the caliper piston by firmly pressing it into the piston bore using your thumbs. Be sure inboard brake shoe is positioned squarely against the face of the caliper piston.

NOTE: The outboard shoes are different left to right. They can be identified by a L or R stamped on the clip.

(5) Install the outboard brake shoe on the disc brake caliper. Be sure the outboard shoe is positioned squarely against the outboard fingers of the caliper.

CAUTION: Use care when installing the caliper assembly onto the adapter, so the caliper guide pin bushings do not get damaged by the mounting bosses.

(6) Carefully lower caliper and brake shoes over rotor and onto adapter, reversing the removal procedure (Fig. 15).

CAUTION: When installing the caliper guide pin bolts extreme caution should be taken not to crossthread the guide pin bolts.

(7) Install the caliper guide pin bolts. Tighten the guide pin bolts to a torque of 35 N·m (26 ft. lbs.).

(8) Install the wheel and tire assembly. Tighten the wheel mounting nuts in proper sequence until all nuts are torqued to half specification. Then repeat the tightening sequence to the full specified torque of 135 N·m (100 ft. lbs.).

(9) Lower vehicle.

CAUTION: Before moving vehicle, pump the brake pedal several times to insure the vehicle has a firm brake pedal to adequately stop the vehicle.

(10) Pump brake pedal several times to set brake shoes to rotors.

(11) Check fluid level in reservoir.

(12) Road test the vehicle and make several stops to wear off any foreign material on the brakes and to seat the brake shoe linings.

BRAKE PADS/SHOES - REAR DRUM

REMOVAL - REAR DRUM BRAKE SHOES

(1) Raise vehicle. (Refer to LUBRICATION & MAINTENANCE/HOISTING - STANDARD PROCEDURE).

(2) Remove the rear wheel and tire assemblies from the vehicle.

(3) Remove rear brake drum to hub retaining clips (if equipped), then remove rear brake drums. (Refer to 5 - BRAKES/HYDRAULIC/MECHANICAL/DRUM - REMOVAL)

NOTE: When creating slack in the park brake cables by locking out the automatic adjuster, (Fig. 18) be sure that the park brake pedal is in the released (most upward) position.

(4) Create slack in the rear park brake cables. Slack is created by grabbing exposed section of front park brake cable and pulling it down and rearward. Slack is maintained in the park brake cable by installing a pair of locking pliers on the park brake cable just rearward of **only the rear** body outrigger bracket. (Fig. 18)

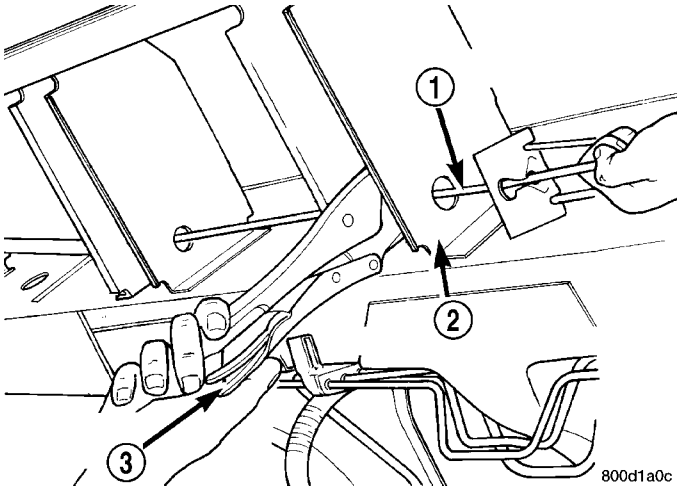

Fig. 18 Locked Out Park Brake Automatic Adjuster

1 - PARK BRAKE CABLE
2 - REAR BODY OUTRIGGER BRACKET
3 - LOCKING PLIERS

BRAKE PADS/SHOES - REAR DRUM (Continued)

(5) Remove adjustment lever spring (Fig. 19) from adjustment lever and front brake shoe.

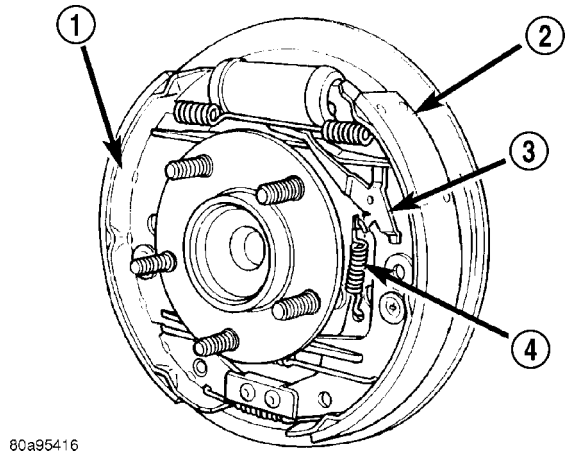

Fig. 19 Adjustment Lever Actuating Spring (Right Side Shown)

1 - TRAILING BRAKE SHOE
2 - LEADING BRAKE SHOE
3 - AUTOMATIC ADJUSTER LEVER
4 - ADJUSTER LEVER ACTUATING SPRING

(6) Remove adjustment lever (Fig. 20) from leading brake shoe.

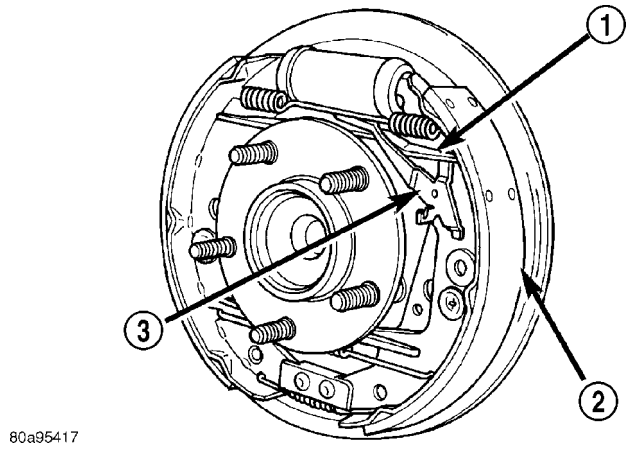

Fig. 20 Adjustment Lever (Right Side Shown)

1 - AUTOMATIC ADJUSTER
2 - LEADING BRAKE SHOE
3 - AUTOMATIC ADJUSTER LEVER

(7) Remove the brake shoe to brake shoe lower return springs (Fig. 21) and (Fig. 22).

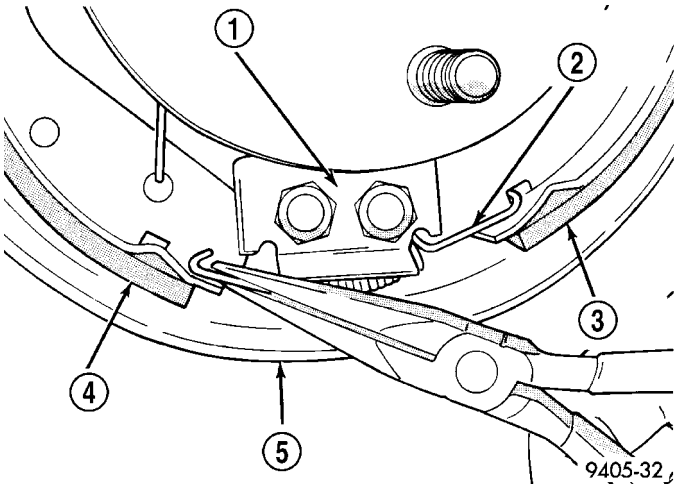

Fig. 21 Remove/Install Brake Shoe Lower Return Spring

1 - ANCHOR PLATE
2 - LOWER BRAKE SHOE RETURN SPRING
3 - REAR BRAKE SHOE
4 - FRONT BRAKE SHOE
5 - BRAKE SUPPORT PLATE

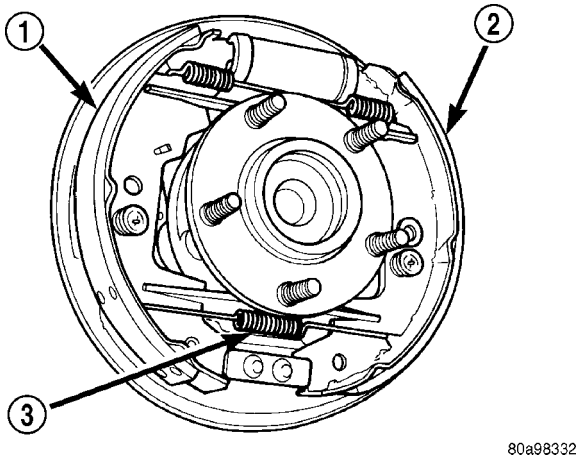

Fig. 22 Brake Shoe Lower Return Spring

1 - TRAILING BRAKE SHOE
2 - LEADING BRAKE SHOE
3 - RETURN SPRING

BRAKE PADS/SHOES - REAR DRUM (Continued)

(8) Remove the tension clip (Fig. 23) attaching the upper return spring to the automatic adjuster assembly.

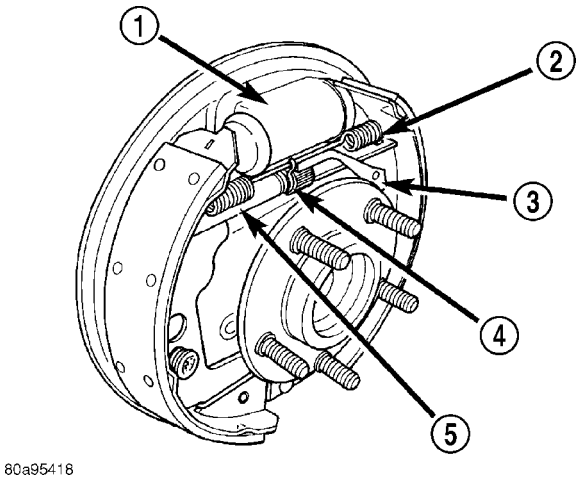

Fig. 23 Tension Clip Attachment To Adjuster

1 - WHEEL CYLINDER
2 - BRAKE SHOE UPPER RETURN SPRING
3 - AUTOMATIC ADJUSTER LEVER
4 - TENSION CLIP
5 - AUTOMATIC ADJUSTER ASSEMBLY

(9) Remove the brake shoe to brake shoe upper return spring (Fig. 24).

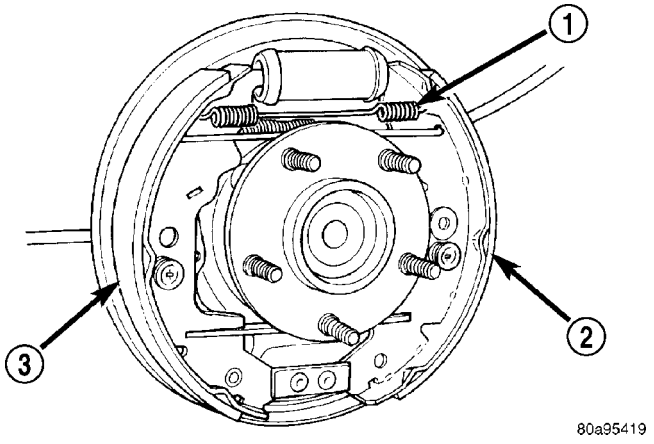

Fig. 24 Brake Shoe Upper Return Spring

1 - BRAKE SHOE RETURN SPRING
2 - LEADING BRAKE SHOE
3 - TRAILING BRAKE SHOE

(10) Remove the trailing brake shoe assembly to brake support plate hold down spring and pin (Fig. 25) from the brake shoe assembly.

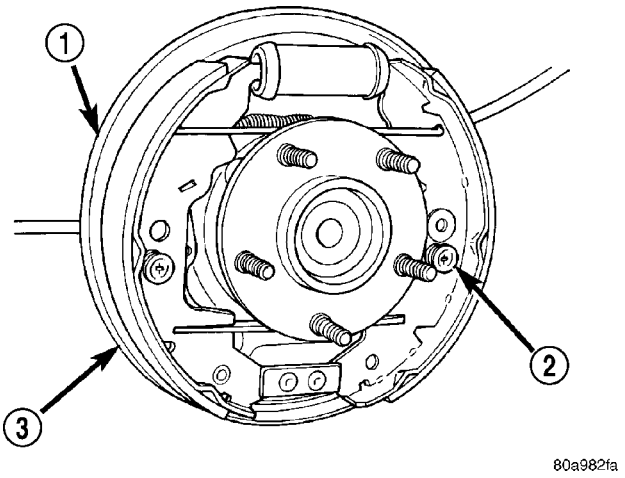

Fig. 25 Trailing Brake Shoe Hold Down Spring And Pin

1 - BRAKE SUPPORT PLATE
2 - HOLD DOWN SPRING AND PIN
3 - TRAILING BRAKE SHOE

(11) Remove the trailing brake shoe assembly from the brake support plate, park brake actuating lever and park brake actuating strut (Fig. 26). Remove the automatic adjuster assembly from the leading brake shoe.

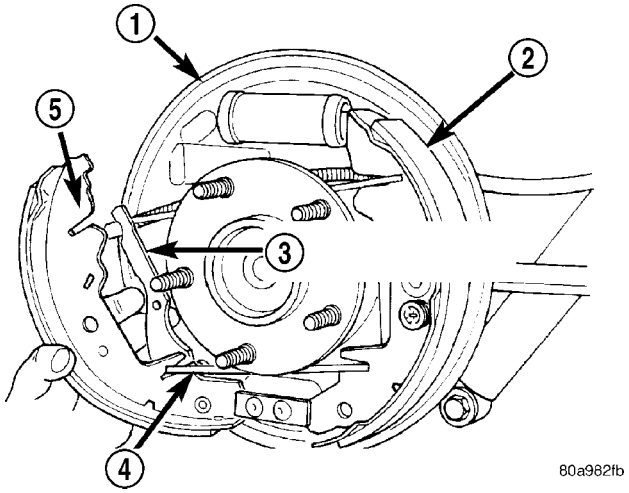

Fig. 26 Trailing Brake Shoe Removal/Installation

1 - BRAKE SUPPORT PLATE
2 - LEADING BRAKE SHOE
3 - PARK BRAKE ACTUATING LEVER
4 - PARK BRAKE ACTUATING STRUT
5 - TRAILING BRAKE SHOE

BRAKE PADS/SHOES - REAR DRUM (Continued)

(12) Remove the leading brake shoe assembly to brake support plate hold down spring and pin (Fig. 27) from the brake shoe. Remove the leading brake shoe from the brake support plate.

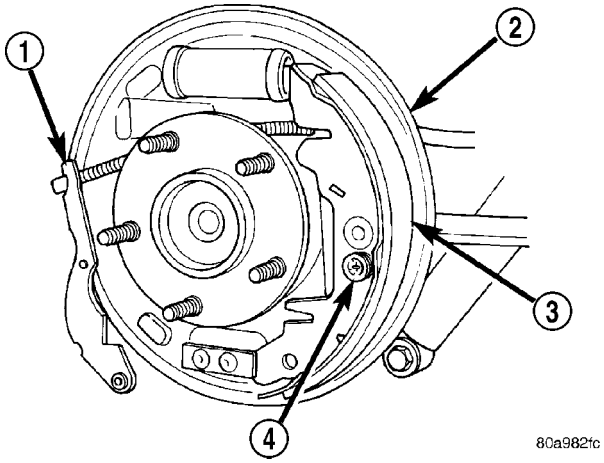

Fig. 27 Leading Brake Shoe Hold Down Spring And Pin

1 - PARK BRAKE ACTUATING LEVER
2 - BRAKE SUPPORT PLATE
3 - LEADING BRAKE SHOE
4 - HOLD DOWN SPRING AND PIN

(13) Remove the park brake actuator (Fig. 28) from the leading brake shoe and transfer to the replacement brake shoe.

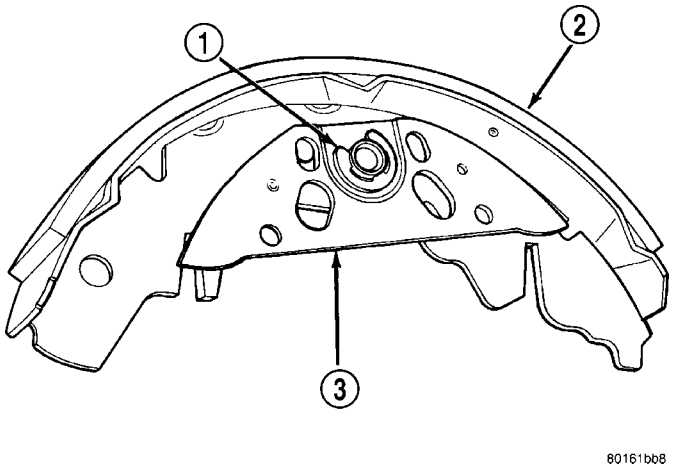

Fig. 28 Park Brake Actuator Plate

1 - RETAINING CLIP
2 - BRAKE SHOE ASSEMBLY
3 - ACTUATOR PLATE

INSPECTION - REAR DRUM BRAKE SHOE LINING

(1) Remove the tire and wheel assembly from the vehicle

(2) Remove the rear brake adjusting hole plug found in the brake support.

(3) Insert a thin screwdriver into brake adjusting hole to hold the adjusting lever away from the notches on the adjusting screw star wheel.

(4) Insert Tool C-3784 into brake adjusting hole and engage notches of brake adjusting screw star wheel. Release brake by prying down with adjusting tool.

(5) Remove the rear brake drum from the rear hub and bearing assembly. (Refer to 5 - BRAKES/HYDRAULIC/MECHANICAL/DRUM - REMOVAL)

(6) Inspect brake lining for wear, shoe alignment, and or contamination from grease or brake fluid.

INSTALLATION - REAR DRUM BRAKE SHOES

(1) Lubricate the eight shoe contact areas on the support plate and anchor, (Fig. 29) using the required special Mopar® Brake Lubricant or equivalent.

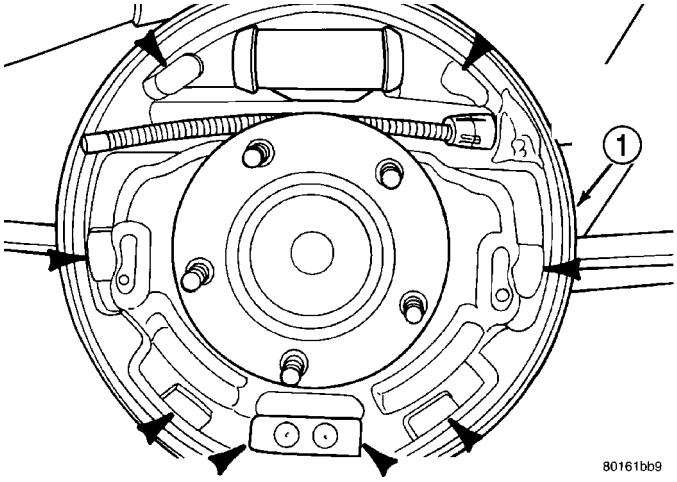

Fig. 29 Brake Support Plate Contact Areas

1 - REAR BRAKE SUPPORT PLATE

(2) Install leading brake shoe on brake support plate. Install the leading brake shoe hold down spring and pin (Fig. 27) on the brake shoe.

BRAKE PADS/SHOES - REAR DRUM (Continued)

(3) Install the park brake actuator strut (Fig. 30) on the leading brake shoe. Then install the park brake actuator lever on the strut (Fig. 30).

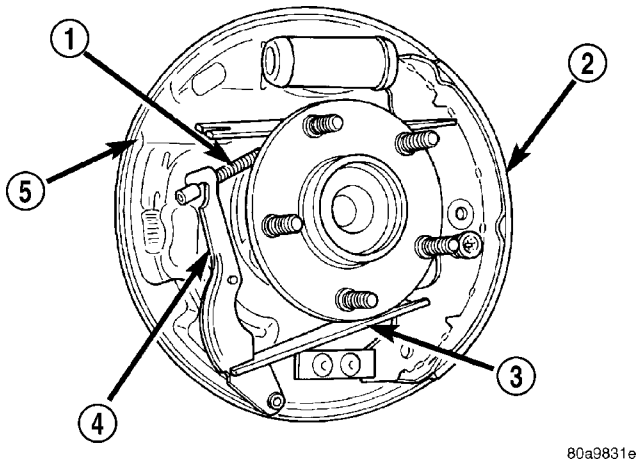

Fig. 30 Park Brake Components Assembled On Leading Brake Shoe

1 - PARK BRAKE CABLE
2 - LEADING BRAKE SHOE
3 - PARK BRAKE ACTUATING STRUT
4 - PARK BRAKE ACTUATING LEVER
5 - BRAKE SUPPORT PLATE

(4) Install the automatic adjuster screw on the leading brake shoe. Then install the trailing brake shoe on the park brake actuating lever and park brake actuating strut (Fig. 26). Position trailing brake shoe on brake support plate.

(5) Install the brake shoe hold down pin and spring on the trailing brake shoe (Fig. 25).

(6) Install the brake shoe to brake shoe upper return spring (Fig. 24).

CAUTION: When installing the tension clip on the automatic adjuster, it must be located on only the threaded area of the adjuster assembly (Fig. 23). If it is located on a non-threaded area of the adjuster, the function of the automatic adjuster will be affected.

(7) Install the tension clip (Fig. 23) attaching the upper return spring to the automatic adjuster assembly.

(8) Install the brake shoe to brake shoe lower return springs on the brake shoes (Fig. 21) and (Fig. 22).

(9) Install automatic adjustment lever on the leading brake shoe of the rear brake assembly (Fig. 20).

(10) Install the actuating spring on the automatic adjustment lever and leading brake shoe assembly (Fig. 19).

(11) Verify that the automatic adjuster lever has positive contact with the star wheel on the automatic adjuster assembly.

(12) When all components of both rear brake assemblies are correctly and fully installed, remove the locking pliers from the front park brake cable.

(13) Adjust brake shoes assemblies so as not to interfere with brake drum installation.

(14) Install the rear brake drums on the hubs.

(15) Adjust rear brake shoes.

(16) Install the wheel and tire assembly.

(17) Tighten the wheel mounting stud nuts in proper sequence until all nuts are torqued to half specification. Then repeat the tightening sequence to the full specified torque of 135 N·m (100 ft. lbs.).

(18) Lower the vehicle.

(19) Push the parking brake lever (pedal) to the floor once and release pedal. This will automatically remove the slack from and correctly adjust the parking brake cables.

(20) Road test vehicle. The automatic adjuster will continue the brake adjustment during the road test of the vehicle.

ADJUSTMENTS

ADJUSTMENT - REAR DRUM BRAKE SHOES

NOTE: Normally, self-adjusting drum brakes do not require manual brake shoe adjustment. Although, in the event of a brake shoe replacement, it is advisable to make the initial adjustment manually to speed up the adjusting time.

NOTE: Before raising the vehicle, verify the parking brake lever is fully released.

(1) Raise the vehicle. (Refer to LUBRICATION & MAINTENANCE/HOISTING - STANDARD PROCEDURE).

(2) Remove rubber plug from rear brake adjusting hole in the rear brake support plate.

(3) Insert a thin screwdriver through the adjusting hole in the support plate and against the star wheel of the adjusting screw. Move handle of the tool downward, rotating the star wheel until a slight drag is felt when tire and wheel assembly is rotated.

(4) Insert a second thin screwdriver or piece of welding rod into brake adjusting hole and push the adjusting lever out of engagement with the star wheel. **Care should be taken so as not to bend adjusting lever or distort lever spring.**

(5) While holding the adjusting lever out of engagement, back off the star wheel just enough to ensure a free wheel with no brake shoe drag.

(6) Repeat the above adjustment at the other rear wheel.

(7) Install the adjusting hole rubber plugs back in the rear brake support plates.

(8) Lower the vehicle.

DISC BRAKE CALIPER - FRONT

REMOVAL

REMOVAL - FRONT DISC BRAKE CALIPER (CONTINENTAL TEVES BRAKES)

(1) Depress the brake pedal past its first inch of travel and hold it in this position using a brake pedal depressor (holding) tool. This is done to isolate the master cylinder from the brake hydraulic system disallowing the brake fluid to completely drain out of the brake fluid reservoir.

(2) Raise the vehicle. (Refer to LUBRICATION & MAINTENANCE/HOISTING - STANDARD PROCEDURE).

(3) Remove front wheel and tire assembly.

(4) Remove the banjo bolt connecting the brake hose to the brake caliper. There are two washers (one on each side of the brake hose fitting) that will come off with the banjo bolt. Discard these washers.

(5) Remove the 2 caliper guide pin bolts.

(6) Remove the brake caliper from the adapter.

REMOVAL - FRONT DISC BRAKE CALIPER (TRW BRAKES)

(1) Using a brake pedal holding tool, depress the brake pedal past its first one inch of travel and hold it in this position. This will isolate the master cylinder from the brake hydraulic system and will not allow the brake fluid to drain out of the master cylinder reservoir when the lines are opened.

(2) Raise the vehicle. Refer to HOISTING in LUBRICATION AND MAINTENANCE.

(3) Remove the front tire and wheel assembly.

(4) Remove the banjo bolt connecting the brake hose to the brake caliper (Fig. 31). There are two washers (one on each side of the flex hose fitting) that will come off with the banjo bolt. Discard the washers.

(5) Remove the two brake caliper guide pin bolts (Fig. 31).

(6) Remove the disc brake caliper from the disc brake adapter.

DISASSEMBLY

DISASSEMBLY - CALIPER GUIDE PIN BUSHINGS (CONTINENTAL TEVES BRAKES)

Before disassembling the brake caliper, clean and inspect it. Refer to CLEANING or INSPECTION in this section.

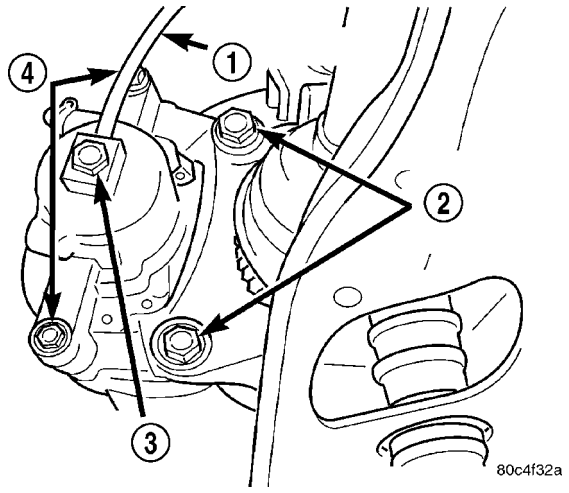

Fig. 31 Brake Caliper Mounting (Typical)

1 - BRAKE HOSE
2 - ADAPTER MOUNTING BOLTS
3 - BANJO BOLT
4 - CALIPER GUIDE PIN BOLTS

(1) Using your fingers, collapse one side of the rubber guide pin bushing. Pull the guide pin bushing out the other side of the brake caliper mounting boss.

(2) Repeat this procedure on the remaining bushing.

DISASSEMBLY - CALIPER PISTON AND SEAL

WARNING: UNDER NO CONDITION SHOULD HIGH PRESSURE AIR EVER BE USED TO REMOVE A PISTON FROM A CALIPER BORE. PERSONAL INJURY COULD RESULT FROM SUCH A PRACTICE.

NOTE: Before disassembling the brake caliper, clean and inspect it. Refer to CLEANING AND INSPECTION in this section.

NOTE: The safest way to remove the piston from the caliper bore is to use the hydraulic pressure of the vehicle's brake system.

(1) Following the removal procedure in DISC BRAKE SHOES found in this section, remove the caliper from the brake rotor and hang the assembly on a wire hook away from rotor and body of the vehicle so brake fluid cannot get on these components. Remove the brake shoes, and place a small piece of wood between the piston and caliper fingers.

(2) Carefully depress the brake pedal to hydraulically push piston out of its bore. Once completed, apply and hold down the brake pedal to any position beyond the first inch of pedal travel using a brake pedal holding tool. This will prevent the fluid in the

DISC BRAKE CALIPER - FRONT (Continued)

master cylinder reservoir from completely draining out.

(3) Disconnect the brake fluid flex hose from the caliper assembly and remove it from the vehicle.

CAUTION: Do not use excessive force when clamping caliper in vise. Excessive vise pressure will cause bore distortion.

(4) Mount the caliper in a vise equipped with protective jaws.

(5) Remove the piston dust boot from the caliper and discard.

NOTE: Do not use a screw driver or other metal tool for seal removal. Using such tools can scratch the bore or leave burrs on the seal groove edges.

(6) Using a soft tool such as a plastic trim stick, work the piston seal out of its groove in caliper piston bore (Fig. 32). Discard the old seal.

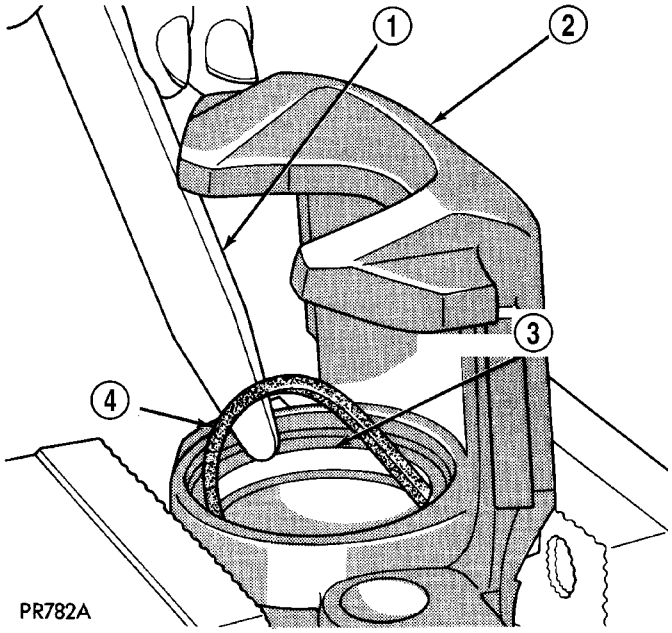

Fig. 32 Removing Piston Seal

1 - PLASTIC TRIM STICK
2 - CALIPER
3 - PISTON SEAL GROOVE
4 - PISTON SEAL

(7) Clean the piston bore and drilled passage ways using alcohol or a suitable solvent. Wipe it dry using only a lint-free cloth.

(8) Inspect the piston bore for scoring or pitting. Bores that show light scratches or corrosion can usually be cleared of the light scratches or corrosion using crocus cloth.

CLEANING - CALIPER

WARNING: DUST AND DIRT ACCUMULATING ON BRAKE PARTS DURING NORMAL USE MAY CONTAIN ASBESTOS FIBERS FROM PRODUCTION OR AFTERMARKET BRAKE LININGS. BREATHING EXCESSIVE CONCENTRATIONS OF ASBESTOS FIBERS CAN CAUSE SERIOUS BODILY HARM. EXERCISE CARE WHEN SERVICING BRAKE PARTS. DO NOT SAND OR GRIND BRAKE LINING UNLESS EQUIPMENT USED IS DESIGNED TO CONTAIN THE DUST RESIDUE. DO NOT CLEAN BRAKE PARTS WITH COMPRESSED AIR OR BY DRY BRUSHING. CLEANING SHOULD BE DONE BY DAMPENING THE BRAKE COMPONENTS WITH A FINE MIST OF WATER, THEN WIPING THE BRAKE COMPONENTS CLEAN WITH A DAMPENED CLOTH. DISPOSE OF CLOTH AND ALL RESIDUE CONTAINING ASBESTOS FIBERS IN AN IMPERMEABLE CONTAINER WITH THE APPROPRIATE LABEL. FOLLOW PRACTICES PRESCRIBED BY THE OCCUPATIONAL SAFETY AND HEALTH ADMINISTRATION (OSHA) AND THE ENVIRONMENTAL PROTECTION AGENCY (EPA) FOR THE HANDLING, PROCESSING, AND DISPOSING OF DUST OR DEBRIS THAT MAY CONTAIN ASBESTOS FIBERS.

To clean or flush the internal passages of the brake caliper, use fresh brake fluid or Mopar® Non-Chlorinated Brake Parts Cleaner. Never use gasoline, kerosene, alcohol, oil, transmission fluid or any fluid containing mineral oil to clean the caliper. These fluids will damage rubber cups and seals.

INSPECTION - CALIPER

Inspect the disc brake caliper for the following:

- Brake fluid leaks in and around boot area and inboard lining
- Ruptures, brittleness or damage to the piston dust boot
- Damaged, dry or brittle guide pin dust boots

If caliper fails inspection, disassemble and recondition caliper, replacing the seals and dust boots.

ASSEMBLY

ASSEMBLY - CALIPER GUIDE PIN BUSHINGS (CONTINENTAL TEVES BRAKES)

(1) Fold the guide pin bushing in half lengthwise.

NOTE: To avoid damage to the bushing, do not use a sharp object to install the guide pin bushing.

(2) Insert the folded bushing into the caliper mounting boss using your fingers from the rear of the caliper.

DISC BRAKE CALIPER - FRONT (Continued)

(3) Unfold the bushing using your fingers or a wooden dowel until the bushing is fully seated into the caliper housing. The bushing flanges should be seated evenly on both sides of the bushing hole.

(4) Lubricate inside surfaces of bushing using Mopar® Dielectric Grease or equivalent.

(5) Repeat the procedure for remaining bushing.

ASSEMBLY - CALIPER PISTON AND SEAL

NOTE: Never use an old piston seal.

(1) Dip the new piston seal in clean brake fluid and install it in the groove of the caliper bore. The seal should be started at one area of the groove and gently worked around and into the groove (Fig. 33)using only your clean fingers to seat it.

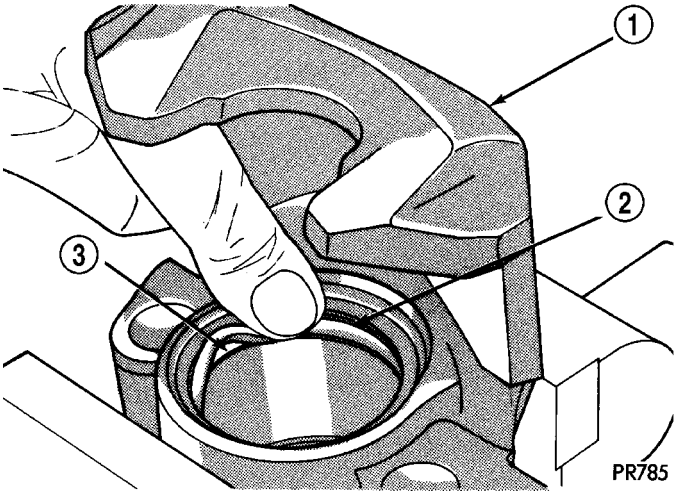

Fig. 33 Installing New Piston Seal

1 - CALIPER
2 - PISTON SEAL
3 - SEAL GROOVE

(2) Coat the new piston boot with clean brake fluid.

(3) Position the dust boot over the piston after coating it with brake fluid.

CAUTION: Force applied to the piston to seat it in the bore must be applied uniformly to avoid cocking and binding of the piston.

(4) Install piston into caliper bore pushing it past the piston seal until it bottoms in the caliper bore (Fig. 34).

(5) Position the dust boot into the counterbore of the caliper assembly piston bore.

(6) Using a hammer and Installer, Special Tool C-4689 or C-4842 (depending on piston size), and Handle, Special Tool C-4171, drive the boot into the counterbore of the caliper as necessary (Fig. 35).

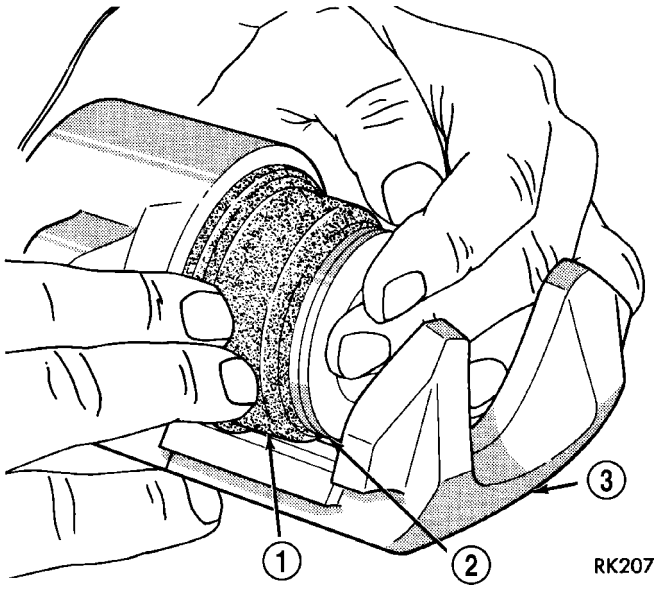

Fig. 34 Installing Piston Into Caliper Bore

1 - BOOT
2 - PISTON
3 - CALIPER

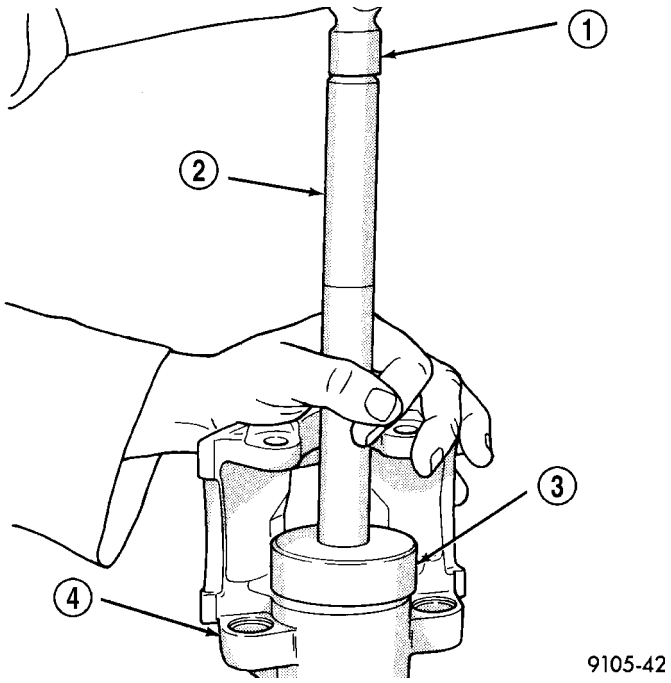

Fig. 35 Installing Dust Boot

1 - HAMMER
2 - SPECIAL TOOL C-4171
3 - SPECIAL TOOL C-4689 or C-4842
4 - CALIPER

(7) Reinstall the caliper on the vehicle and bleed the brakes as necessary. Refer to Installation in this section.

DISC BRAKE CALIPER - FRONT (Continued)

INSTALLATION

INSTALLATION - FRONT DISC BRAKE CALIPER (CONTINENTAL TEVES BRAKES)

CAUTION: TRW and Continental Teves brake calipers are not interchangeable. Each caliper is specifically designed for the unique brake system. If calipers are interchanged, improper performance, noise and increased stopping distance can occur. (Refer to 5 - BRAKES/HYDRAULIC/MECHANICAL - DESCRIPTION)

(1) Completely retract the caliper piston back into piston bore of the caliper. Use a C-clamp to retract the piston if necessary. Place a wood block over the piston before installing the C-clamp to avoid damaging the piston.

CAUTION: Use care when installing the brake caliper assembly onto the steering knuckle, so that the seals on the caliper guide pin bushings do not get damaged by the steering knuckle bosses.

(2) Carefully position the brake caliper and shoes over the brake rotor and adapter.

(3) Install the caliper guide pin bolts and tighten to a torque of 35 N·m (26 ft. lbs.). **Extreme caution should be taken not to cross thread the caliper guide pin bolts.**

(4) Install the anti-rattle clip on the outboard side of the caliper. Start the clip into the holes on the caliper, then stretch the clip legs past the abutments on the caliper adapter.

CAUTION: When connecting the brake hose to the caliper, install new brake hose to caliper special copper washers.

(5) Install the brake hose on the caliper. To do this, first place one NEW special fitting washer on each side of the hose fitting, then slide the banjo bolt through the fitting. Next, thread the banjo bolt into the threaded port on the rear of the brake caliper. Tighten the banjo bolt to a torque of 47 N·m (35 ft. lbs.).

(6) Install the wheel and tire assembly. Tighten the wheel mounting stud nuts in proper sequence until all nuts are torqued to half specification, then repeat the tightening sequence to the full specified torque of 135 N·m (100 ft. lbs.).

(7) Lower the vehicle.

(8) Remove the brake pedal depressor (holding) tool.

(9) Bleed the hydraulic brake circuit to the brake caliper. (Refer to 5 - BRAKES - STANDARD PROCEDURE)

(10) Road test the vehicle and make several stops to wear off any foreign material on the brakes and to seat the brake shoe linings.

INSTALLATION - FRONT DISC BRAKE CALIPER (TRW BRAKES)

CAUTION: TRW and Continental Teves brake calipers are not interchangeable. Each caliper is specifically designed for the unique brake system. If calipers are interchanged, improper performance, noise and increased stopping distance can occur. (Refer to 5 - BRAKES/HYDRAULIC/MECHANICAL - DESCRIPTION)

(1) Completely retract the caliper piston back into the bore of the caliper. Use a C-clamp to retract the piston if necessary. Place a wood block over the piston before installing the C-clamp to avoid damaging the piston.

CAUTION: Use care when installing the caliper onto the disc brake adapter to avoid damaging the boots on the caliper guide pins.

(2) Install the disc brake caliper over the brake shoes on the brake caliper adapter.

(3) Align the caliper guide pin bolt holes with the guide pins. Install the caliper guide pin bolts and tighten them to a torque of 35 N·m (26 ft. lbs.) (Fig. 31).

(4) Install the banjo bolt connecting the brake hose to the brake caliper (Fig. 31). Install NEW copper washers on each side of the hose fitting as the banjo bolt is guided through the fitting. Thread the banjo bolt into the caliper and tighten it to a torque of 47 N·m (35 ft. lbs.).

(5) Install the tire and wheel assembly. Tighten the wheel mounting nuts to a torque of 135 N·m (100 ft. lbs.).

(6) Lower the vehicle.

(7) Remove the brake pedal holding tool.

(8) Bleed the caliper as necessary. (Refer to 5 - BRAKES - BASE - STANDARD PROCEDURE).

(9) Road test the vehicle and make several stops to wear off any foreign material on the brakes and to seat the brake shoes.

DISC BRAKE CALIPER - REAR

REMOVAL - REAR DISC BRAKE CALIPER

NOTE: Handling of the rotor and caliper, must be done in such a way as to avoid damage to the rotor and scratching or nicking of lining on the brake shoes.

(1) Depress the brake pedal past its first inch of travel and hold it in this position using a brake pedal depressor (holding) tool. This is done to isolate the master cylinder from the brake hydraulic system disallowing the brake fluid to completely drain out of the brake fluid reservoir.

(2) Raise the vehicle. (Refer to LUBRICATION & MAINTENANCE/HOISTING - STANDARD PROCEDURE)

(3) Remove rear wheel and tire assembly from vehicle.

(4) Remove the banjo bolt connecting the brake hose to the brake caliper. There are two washers (one on each side of the brake hose fitting) that will come off with the banjo bolt. Discard these washers.

(5) Remove the disc brake caliper to adapter guide pin bolts (Fig. 36).

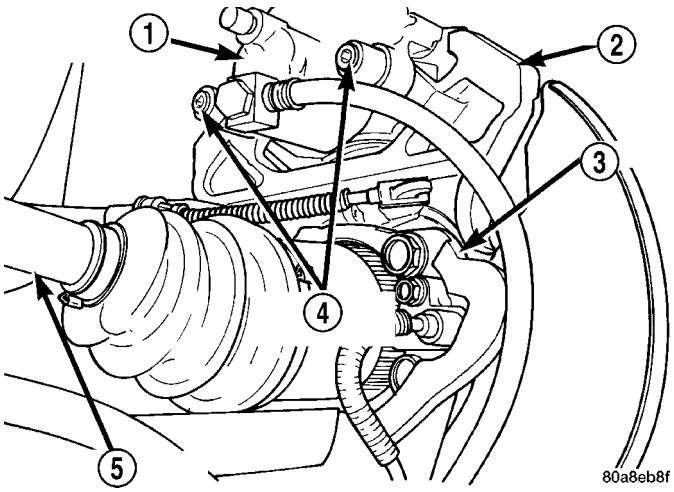

Fig. 36 Caliper Guide Pin Bolts

1 - DISC BRAKE CALIPER
2 - ADAPTER
3 - AXLE
4 - GUIDE PIN BOLTS
5 - DRIVESHAFT (AWD MODELS ONLY)

(6) Remove rear caliper from adapter using the following procedure. First rotate front of caliper up from the adapter. Then pull the rear of the caliper and the outboard brake shoe anti-rattle clip out from under the rear abutment on the adapter (Fig. 37).

(7) If the brake rotor requires removal, it can now be removed by first removing the retainer clips from the wheel mounting studs, then pulling the rotor straight off the studs.

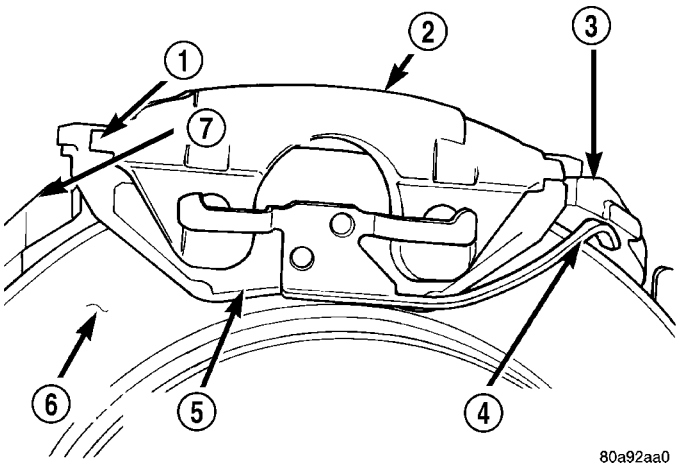

Fig. 37 Removing/Installing Caliper

1 - LIFT THIS END OF CALIPER AWAY FROM ADAPTER FIRST
2 - DISC BRAKE CALIPER
3 - ADAPTER ABUTMENT
4 - OUTBOARD BRAKE SHOE HOLD DOWN CLIP
5 - OUTBOARD BRAKE SHOE
6 - ROTOR
7 - ADAPTER

DISASSEMBLY - CALIPER PISTON AND SEAL

WARNING: UNDER NO CONDITION SHOULD HIGH PRESSURE AIR EVER BE USED TO REMOVE A PISTON FROM A CALIPER BORE. PERSONAL INJURY COULD RESULT FROM SUCH A PRACTICE.

NOTE: Before disassembling the brake caliper, clean and inspect it. Refer to CLEANING AND INSPECTION in this section.

NOTE: The safest way to remove the piston from the caliper bore is to use the hydraulic pressure of the vehicle's brake system.

(1) Following the removal procedure in DISC BRAKE SHOES found in this section, remove the caliper from the brake rotor and hang the assembly on a wire hook away from rotor and body of the vehicle so brake fluid cannot get on these components. Remove the brake shoes, and place a small piece of wood between the piston and caliper fingers.

(2) Carefully depress the brake pedal to hydraulically push piston out of its bore. Once completed, apply and hold down the brake pedal to any position beyond the first inch of pedal travel using a brake pedal holding tool. This will prevent the fluid in the master cylinder reservoir from completely draining out.

DISC BRAKE CALIPER - REAR (Continued)

(3) Disconnect the brake fluid flex hose from the caliper assembly and remove it from the vehicle.

CAUTION: Do not use excessive force when clamping caliper in vise. Excessive vise pressure will cause bore distortion.

(4) Mount the caliper in a vise equipped with protective jaws.

(5) Remove the piston dust boot from the caliper and discard.

NOTE: Do not use a screw driver or other metal tool for seal removal. Using such tools can scratch the bore or leave burrs on the seal groove edges.

(6) Using a soft tool such as a plastic trim stick, work the piston seal out of its groove in caliper piston bore (Fig. 38). Discard the old seal.

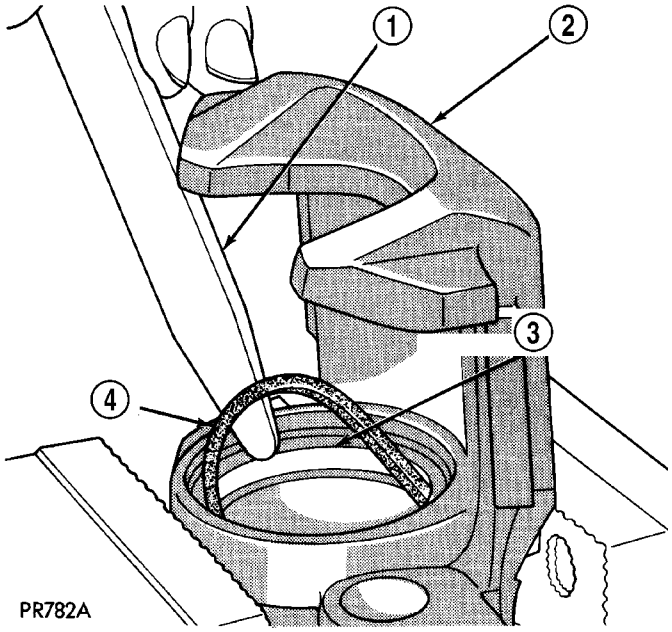

Fig. 38 Removing Piston Seal

1 - PLASTIC TRIM STICK
2 - CALIPER
3 - PISTON SEAL GROOVE
4 - PISTON SEAL

(7) Clean the piston bore and drilled passage ways using alcohol or a suitable solvent. Wipe it dry using only a lint-free cloth.

(8) Inspect the piston bore for scoring or pitting. Bores that show light scratches or corrosion can usually be cleared of the light scratches or corrosion using crocus cloth.

CLEANING - CALIPER

WARNING: DUST AND DIRT ACCUMULATING ON BRAKE PARTS DURING NORMAL USE MAY CONTAIN ASBESTOS FIBERS FROM PRODUCTION OR AFTERMARKET BRAKE LININGS. BREATHING EXCESSIVE CONCENTRATIONS OF ASBESTOS FIBERS CAN CAUSE SERIOUS BODILY HARM. EXERCISE CARE WHEN SERVICING BRAKE PARTS. DO NOT SAND OR GRIND BRAKE LINING UNLESS EQUIPMENT USED IS DESIGNED TO CONTAIN THE DUST RESIDUE. DO NOT CLEAN BRAKE PARTS WITH COMPRESSED AIR OR BY DRY BRUSHING. CLEANING SHOULD BE DONE BY DAMPENING THE BRAKE COMPONENTS WITH A FINE MIST OF WATER, THEN WIPING THE BRAKE COMPONENTS CLEAN WITH A DAMPENED CLOTH. DISPOSE OF CLOTH AND ALL RESIDUE CONTAINING ASBESTOS FIBERS IN AN IMPERMEABLE CONTAINER WITH THE APPROPRIATE LABEL. FOLLOW PRACTICES PRESCRIBED BY THE OCCUPATIONAL SAFETY AND HEALTH ADMINISTRATION (OSHA) AND THE ENVIRONMENTAL PROTECTION AGENCY (EPA) FOR THE HANDLING, PROCESSING, AND DISPOSING OF DUST OR DEBRIS THAT MAY CONTAIN ASBESTOS FIBERS.

To clean or flush the internal passages of the brake caliper, use fresh brake fluid or Mopar® Non-Chlorinated Brake Parts Cleaner. Never use gasoline, kerosene, alcohol, oil, transmission fluid or any fluid containing mineral oil to clean the caliper. These fluids will damage rubber cups and seals.

INSPECTION - CALIPER

Inspect the disc brake caliper for the following:

- Brake fluid leaks in and around boot area and inboard lining
- Ruptures, brittleness or damage to the piston dust boot
- Damaged, dry or brittle guide pin dust boots

If caliper fails inspection, disassemble and recondition caliper, replacing the seals and dust boots.

DISC BRAKE CALIPER - REAR (Continued)

ASSEMBLY - CALIPER PISTON AND SEAL

NOTE: Never use an old piston seal.

(1) Dip the new piston seal in clean brake fluid and install it in the groove of the caliper bore. The seal should be started at one area of the groove and gently worked around and into the groove (Fig. 39)using only your clean fingers to seat it.

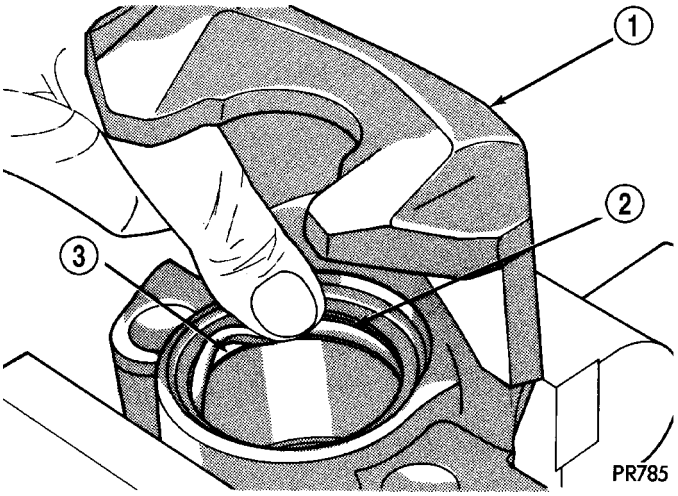

Fig. 39 Installing New Piston Seal

1 - CALIPER
2 - PISTON SEAL
3 - SEAL GROOVE

(2) Coat the new piston boot with clean brake fluid.

(3) Position the dust boot over the piston after coating it with brake fluid.

CAUTION: Force applied to the piston to seat it in the bore must be applied uniformly to avoid cocking and binding of the piston.

(4) Install piston into caliper bore pushing it past the piston seal until it bottoms in the caliper bore (Fig. 40).

(5) Position the dust boot into the counterbore of the caliper assembly piston bore.

(6) Using a hammer and Installer, Special Tool C-4689 or C-4842 (depending on piston size), and Handle, Special Tool C-4171, drive the boot into the counterbore of the caliper as necessary (Fig. 41).

(7) Reinstall the caliper on the vehicle and bleed the brakes as necessary. Refer to Installation in this section.

INSTALLATION - REAR DISC BRAKE CALIPER

(1) Completely retract caliper piston back into piston bore of the caliper.

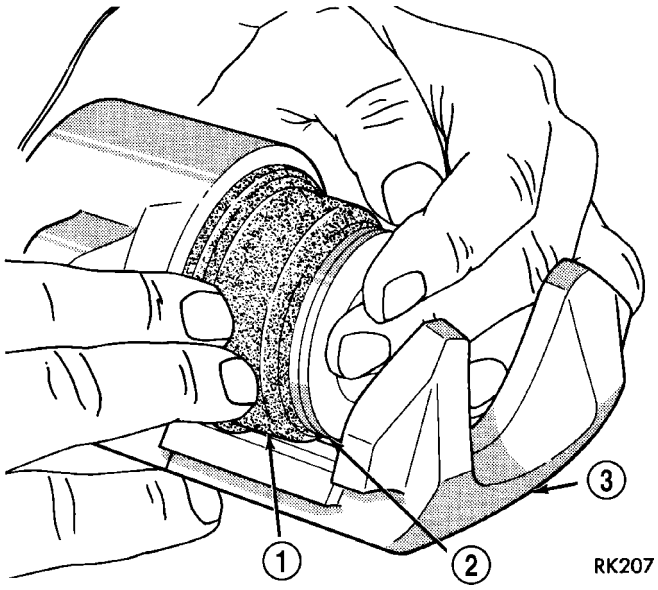

Fig. 40 Installing Piston Into Caliper Bore

1 - BOOT
2 - PISTON
3 - CALIPER

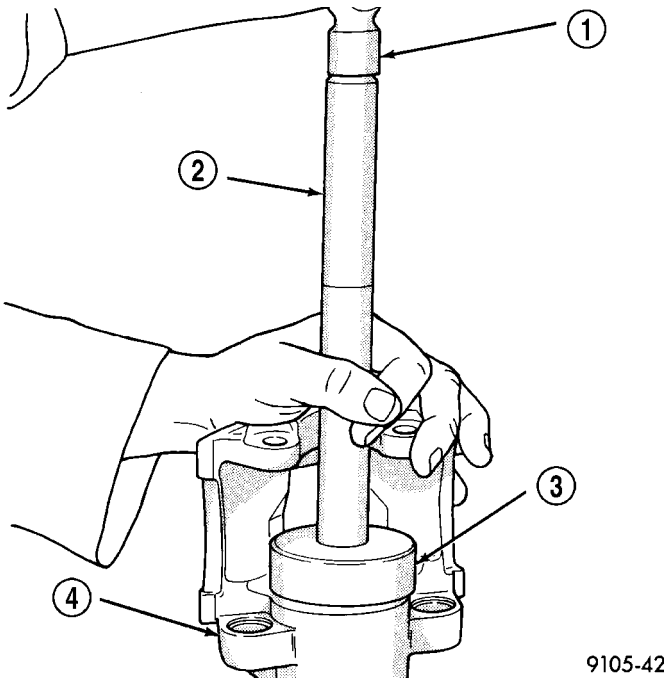

Fig. 41 Installing Dust Boot

1 - HAMMER
2 - SPECIAL TOOL C-4171
3 - SPECIAL TOOL C-4689 or C-4842
4 - CALIPER

(2) If removed, install the brake rotor on the hub, making sure it is squarely seated on the face of the hub.

DISC BRAKE CALIPER - REAR (Continued)

CAUTION: Use care when installing the caliper assembly onto the adapter, so the caliper guide pin bushings do not get damaged by the mounting bosses.

(3) Carefully lower caliper and brake shoes over rotor and onto the adapter using the reverse procedure for removal (Fig. 37).

CAUTION: When installing guide pin bolts extreme caution should be taken not to cross-thread the caliper guide pin bolts.

(4) Install the caliper guide pin bolts. Tighten the guide pin bolts to a torque of 35 N·m (26 ft. lbs.).

CAUTION: When connecting the brake hose to the caliper, install new brake hose to caliper special washers.

(5) Install the brake hose on the caliper. To do this, first place one NEW special copper washer on each side of the hose fitting, then slide the banjo bolt through the fitting. Next, thread the banjo bolt into the threaded port on the rear of the brake caliper. Tighten the banjo bolt to a torque of 47 N·m (35 ft. lbs.).

(6) Install the wheel and tire assembly.

(7) Tighten the wheel mounting stud nuts in proper sequence until all nuts are torqued to half specification. Then repeat the tightening sequence to the full specified torque of 135 N·m (100 ft. lbs.).

(8) Lower the vehicle.

(9) Remove the brake pedal depressor (holding) tool.

(10) Bleed the hydraulic brake circuit to the brake caliper. (Refer to 5 - BRAKES - STANDARD PROCEDURE)

(11) Road test the vehicle and make several stops to wear off any foreign material on the brakes and to seat the brake shoe linings.

DISC BRAKE CALIPER ADAPTER

REMOVAL - FRONT DISC BRAKE CALIPER ADAPTER

(1) Raise vehicle. (Refer to LUBRICATION & MAINTENANCE/HOISTING - STANDARD PROCEDURE)

(2) Remove front wheel and tire assembly, disc brake caliper and brake shoes. (Refer to 5 - BRAKES/HYDRAULIC/MECHANICAL/BRAKE PADS/SHOES - REMOVAL)

(3) Remove two bolts fastening adapter to steering knuckle, then remove disc brake caliper adapter.

INSTALLATION - FRONT DISC BRAKE CALIPER ADAPTER

(1) Place adapter over brake rotor and align adapter mounting holes to knuckle.

CAUTION: Adapter mounting bolts have a special Dacromet® coating applied to resist corrosion. If mounting bolts need to be replaced, use only Mopar® replacement parts.

(2) Install adapter mounting bolts and tighten to 169 N·m (125 ft. lbs.) torque.

(3) Install brake shoes, disc brake caliper and wheel and tire assembly. (Refer to 5 - BRAKES/HYDRAULIC/MECHANICAL/BRAKE PADS/SHOES - INSTALLATION)

(4) Lower vehicle.

(5) Pump the brake pedal several times to set the pads to the brake rotor.

(6) Check and adjust brake fluid level as necessary.

DISC BRAKE CALIPER GUIDE PINS

REMOVAL - DISC BRAKE CALIPER GUIDE PINS (TRW BRAKES)

(1) Raise the vehicle. Refer to HOISTING in LUBRICATION AND MAINTENANCE.

(2) Remove the front tire and wheel assembly.

(3) Remove the two brake caliper guide pin bolts (Fig. 42).

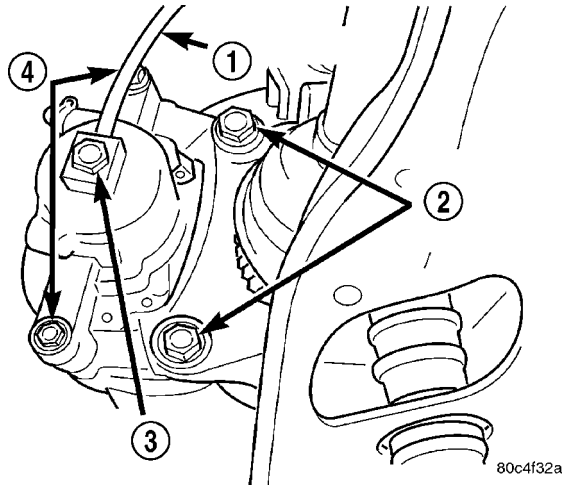

Fig. 42 Brake Caliper Mounting

1 - BRAKE HOSE
2 - ADAPTER MOUNTING BOLTS
3 - BANJO BOLT
4 - CALIPER GUIDE PIN BOLTS

DISC BRAKE CALIPER GUIDE PINS (Continued)

(4) Remove the disc brake caliper from the disc brake caliper adapter and hang it out of the way using wire or a bungee cord. Use care not to overextend the brake hose when doing this.

(5) Remove the guide pins and boots from the adapter as shown (Fig. 43).

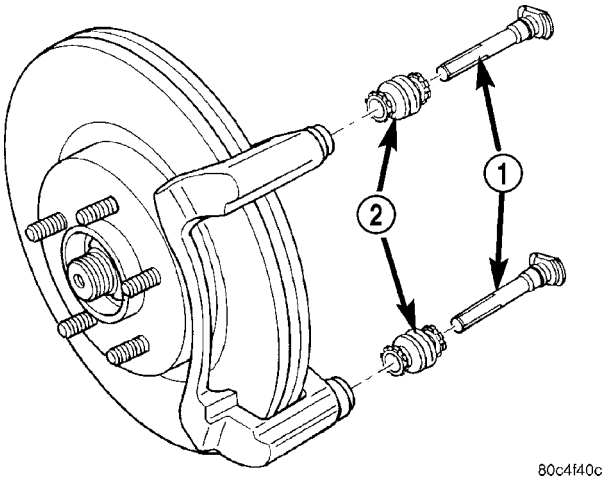

Fig. 43 Guide Pins And Boots

1 - PINS
2 - BOOTS

INSTALLATION - DISC BRAKE CALIPER GUIDE PINS (TRW BRAKES)

(1) Lubricate the guide pins and inside the boots with the packet supplied with the service kit, Syntheso GLK-1 lubricant or equivalent.

(2) Install the guide pins and boots in the adapter as shown (Fig. 43). The boots have grooves built into their inner lips to fit onto the pins and adapter.

CAUTION: Use care when installing the caliper onto the disc brake adapter to avoid damaging the boots on the caliper guide pins.

(3) Install the disc brake caliper over the brake shoes on the brake caliper adapter.

(4) Align the caliper guide pin bolt holes with the guide pins. Install the caliper guide pin bolts and tighten them to a torque of 35 N·m (26 ft. lbs.) (Fig. 42).

(5) Install the tire and wheel assembly. Tighten the wheel mounting nuts to a torque of 135 N·m (100 ft. lbs.).

(6) Lower the vehicle.

(7) Pump the brake pedal several times before moving the vehicle to set the shoes to the brake rotor.

DRUM

REMOVAL

(1) Raise the vehicle. (Refer to LUBRICATION & MAINTENANCE/HOISTING - STANDARD PROCEDURE).

(2) Remove the tire and wheel assembly from the vehicle

(3) Remove the rear brake shoe adjusting hole cover plug.

(4) Insert a thin screwdriver into brake adjusting hole and hold adjusting lever away from notches of adjusting screw star wheel.

(5) Insert another thin screwdriver into brake adjusting hole and engage notches of brake adjusting screw star wheel. Release brake adjustment by prying upward with adjusting tool.

(6) Remove rear brake drum from rear hub/bearing assembly.

NOTE: It may be necessary to insert M8 X 1.25 MM bolts into the two removal holes on the drum to force the drum off the hub.

INSTALLATION

(1) Adjust brake shoe assemblies so as not to interfere with brake drum installation.

(2) Install the rear brake drums on the hubs.

(3) Adjust drum brake shoes as necessary per procedure found in the Adjustment section of this service manual group (Refer to 5 - BRAKES/ HYDRAULIC/MECHANICAL/DRUM - ADJUSTMENTS).

(4) Install wheel and tire assembly.

(5) Tighten the wheel mounting stud nuts in proper sequence until all nuts are torqued to half specification. Then repeat the tightening sequence to the full specified torque of 135 N·m (100 ft. lbs.).

(6) Lower the vehicle.

FLUID

DIAGNOSIS AND TESTING - BRAKE FLUID CONTAMINATION

Indications of fluid contamination are swollen or deteriorated rubber parts.

Swollen rubber parts indicate the presence of petroleum in the brake fluid.

To test for contamination, put a small amount of drained brake fluid in clear glass jar. If fluid separates into layers, there is mineral oil or other fluid contamination of the brake fluid.

If brake fluid is contaminated, drain and thoroughly flush system. Replace master cylinder, proportioning valve, caliper seals, wheel cylinder seals, Antilock Brake hydraulic unit and all hydraulic fluid hoses.

STANDARD PROCEDURE - BRAKE FLUID LEVEL CHECKING

Check master cylinder reservoir fluid level a minimum of twice annually.

Fluid reservoirs are marked with the words FULL and ADD to indicate proper brake fluid fill level of the master cylinder.

If necessary, add brake fluid to bring the level to the bottom of the FULL mark on the side of the master cylinder fluid reservoir.

Use only Mopar® brake fluid or equivalent from a sealed container. Brake fluid must conform to DOT 3 specifications (DOT 4 or DOT 4+ are acceptable).

DO NOT use brake fluid with a lower boiling point, as brake failure could result during prolonged hard braking.

Use only brake fluid that was stored in a tightly-sealed container.

DO NOT use petroleum-based fluid because seal damage will result. Petroleum based fluids would be items such as engine oil, transmission fluid, power steering fluid etc.

SPECIFICATIONS

BRAKE FLUID

The brake fluid used in this vehicle must conform to DOT 3 specifications (DOT 4 and DOT 4+ are acceptable) and SAE J1703 standards. No other type of brake fluid is recommended or approved for usage in the vehicle brake system. Use only Mopar® Brake Fluid or equivalent from a tightly sealed container.

CAUTION: Never use reclaimed brake fluid or fluid from an container which has been left open. An open container of brake fluid will absorb moisture from the air and contaminate the fluid.

CAUTION: Never use any type of a petroleum-based fluid in the brake hydraulic system. Use of such type fluids will result in seal damage of the vehicle brake hydraulic system causing a failure of the vehicle brake system. Petroleum based fluids would be items such as engine oil, transmission fluid, power steering fluid, etc.

JUNCTION BLOCK

DESCRIPTION - NON-ABS JUNCTION BLOCK

A junction block is used on vehicles that are not equipped with antilock brakes (ABS). The junction block mounts in the same location as the integrated control unit (ICU) does on vehicles equipped with ABS. This allows for use of the same brake tube configuration on all vehicles. The junction block is located on the driver's side of the front suspension cradle/crossmember below the master cylinder (Fig. 44).

It has six threaded ports to which the brake tubes connect. Two are for the primary and secondary brake tubes coming from the master cylinder. The remaining four are for the chassis brake tubes going to each brake assembly.

OPERATION - NON-ABS JUNCTION BLOCK

The junction block distributes the brake fluid coming from the master cylinder primary and secondary ports to the four chassis brake tubes leading to the brakes at each wheel. Since the junction block mounts in the same location as the ABS integrated control unit (ICU), it allows for the common use of brake tubes going to the brakes whether the vehicle is equipped with or without ABS.

NOTE: Although the brake tubes coming from the master cylinder to the junction block or ABS ICU may appear to be the same, they are not. They are unique to each brake system application.

JUNCTION BLOCK (Continued)

REMOVAL - NON-ABS JUNCTION BLOCK

(1) Using a brake pedal depressor, move and lock the brake pedal to a position past its first 1 inch of travel. This will prevent brake fluid from draining out of the master cylinder when the brake tubes are removed from the junction block.

(2) Disconnect the battery negative cable.

(3) If the vehicle is equipped with speed control, perform the following:

(a) Disconnect the battery positive cable.

(b) Remove the battery (Refer to 8 - ELECTRICAL/BATTERY SYSTEM/BATTERY - REMOVAL).

(c) Disconnect the vacuum hose connector at the tank built into the battery tray.

(d) Remove the screw securing the coolant filler neck to the battery tray.

(e) Remove the battery tray (Refer to 8 - ELECTRICAL/BATTERY SYSTEM/TRAY - REMOVAL).

(f) Remove the fasteners and move the speed control servo off to the side, out of the way.

CAUTION: Before removing the brake tubes from the junction block, the junction block and the brake tubes must be thoroughly cleaned. This is required to prevent contamination from entering the brake hydraulic system.

(4) Remove the four chassis brake tubes from the top of the junction block (Fig. 44).

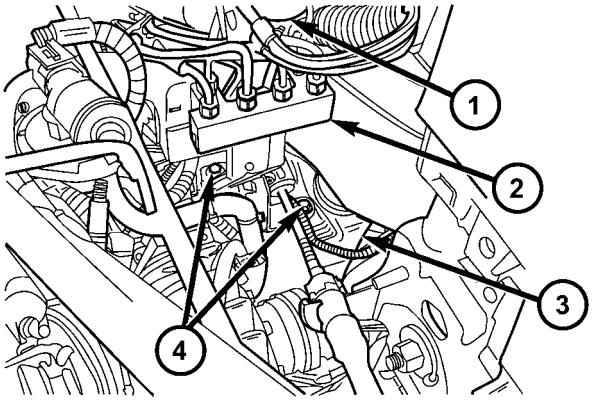

Fig. 44 NON-ABS JUNCTION BLOCK

1 - MASTER CYLINDER
2 - JUNCTION BLOCK
3 - SUSPENSION CROSSMEMBER
4 - MOUNTING BOLTS

(5) Remove the primary and secondary brake tubes from the top of the junction block.

(6) Remove the bolts attaching the junction block mounting bracket to the front suspension crossmember (Fig. 44), then remove the junction block.

INSTALLATION - NON-ABS JUNCTION BLOCK

(1) Install the junction block and mounting bracket on the front suspension crossmember (Fig. 44). Install the mounting bolts and tighten to a torque of 28 N·m (250 in. lbs.).

(2) Install the primary and secondary brake tubes from the master cylinder in their ports. Tighten tube nuts to a torque of 17 N·m (145 in. lbs.). **Take care not to twist tubes when tightening tube nuts. They must be properly positioned to allow free movement with rubber isolated suspension crossmember.**

(3) Install the four chassis brake tubes into the outlet ports of the junction block. Tighten all 6 tube nuts to a torque of 17 N·m (145 in. lbs.).

(4) If the vehicle is equipped with speed control, perform the following:

(a) Install the speed control servo with its mounting nuts.

(b) Connect the wiring harness to the speed control servo.

(c) Install the battery tray (Refer to 8 - ELECTRICAL/BATTERY SYSTEM/TRAY - INSTALLATION).

(d) Install the screw securing the coolant filler neck to the battery tray.

(e) Reconnect the vacuum hose connector at the tank built into the battery tray.

(f) Install the battery (Refer to 8 - ELECTRICAL/BATTERY SYSTEM/BATTERY - INSTALLATION).

(g) Install the battery shield.

(5) Remove the brake pedal holder.

(6) Connect negative cable back on negative post of the battery.

(7) Bleed the brake system thoroughly to ensure that all air has been expelled from the hydraulic system. (Refer to 5 - BRAKES - STANDARD PROCEDURE).

(8) Road test the vehicle to verify proper operation of the brake system.

MASTER CYLINDER

DESCRIPTION

DESCRIPTION

The master cylinder is located on the power brake booster in the engine compartment on the driver's side (Fig. 45). This vehicle uses 3 different master cylinders. Master cylinder usage depends on what type of brake system the vehicle is equipped with.

CAUTION: Master cylinders are not interchangeable between systems. Performance and stopping distance issues will result if the incorrect master cylinder is installed on the vehicle.

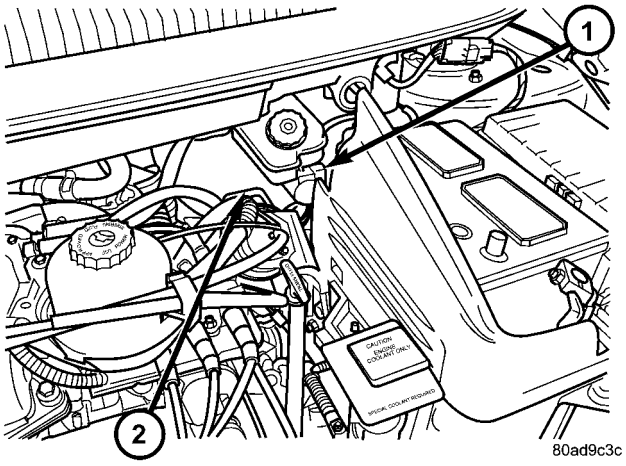

Fig. 45 Master Cylinder And Booster Location

1 - MASTER CYLINDER
2 - POWER BRAKE BOOSTER

For information on master cylinder application, bore and type, view the following table:

BRAKE SYSTEM	MASTER CYLINDER BORE/TYPE
Disc/Drum - ABS	23.8 mm (15/16 in.) Conventional Compensating Port
Disc/Drum - Non-ABS	23.8 mm (15/16 in.) Conventional Compensating Port
Disc/Disc - ABS	25.4 mm (1.0 in.) Conventional Compensating Port
Disc/Disc ABS With Traction Control	25.4 mm (1.0 in.) Dual Center Port

CAUTION: When replacing a master cylinder, be sure to use the correct master cylinder for the type of brake system the vehicle is equipped with.

The body of the master cylinder is an anodized aluminum casting. It has a machined bore to accept the master cylinder pistons and threaded ports with seats for the hydraulic brake line connections.

The brake fluid reservoir is mounted on the top of the master cylinder. It is made of a see-through polypropylene type plastic for easy fluid level viewing. A brake fluid level switch is attached to the brake fluid reservoir.

The master cylinder is not a repairable component and must be replaced if diagnosed to be functioning improperly. The brake fluid reservoir and brake fluid level switch can be replaced separately.

CAUTION: Do not hone the bore of the cylinder as this will remove the anodized surface from the bore.

DESCRIPTION - RHD

The master cylinder used on right hand drive (RHD) vehicles functions similarly to that used on left hand drive (LHD) vehicles. The RHD master cylinder, as well as the RHD power brake booster, is located in the same area, but lower in the engine compartment than LHD models (Fig. 46). For that reason an extension manifold is placed between the fluid reservoir and master cylinder housing allowing the fluid reservoir to be positioned in the same location as on LHD models.

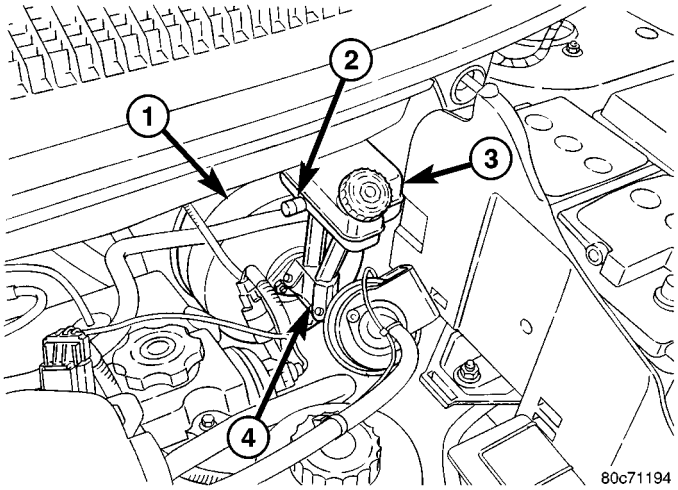

Fig. 46 RHD MASTER CYLINDER AND POWER BRAKE BOOSTER

1 - POWER BRAKE BOOSTER
2 - BRAKE FLUID LEVEL SWITCH
3 - FLUID RESERVOIR
4 - MASTER CYLINDER

MASTER CYLINDER (Continued)

OPERATION

When the brake pedal is depressed, the master cylinder primary and secondary pistons apply brake pressure through the chassis tubes to the brakes at each tire and wheel assembly.

The master cylinder primary outlet port supplies hydraulic pressure to the right front and left rear brakes. The secondary outlet port supplies hydraulic pressure to the left front and right rear brakes.

STANDARD PROCEDURE - MASTER CYLINDER BLEEDING

CAUTION: When clamping master cylinder in vise, only clamp master cylinder by its mounting flange. Do not clamp master cylinder piston rod, reservoir, seal or body.

(1) Clamp master cylinder in a vise.

NOTE: Use correct bleeder tubes when bleeding master cylinder. Master cylinder outlet ports vary in size and type depending on whether master cylinder is for a vehicle equipped with ABS or not. ABS equipped master cylinders require the additional use of ISO style flare adapters supplied in Special Tool Package 8822 to be used in conjunction with Bleeder Tubes, Special Tool Package 8358.

(2) Attach special tools for bleeding master cylinder in the following fashion:

(a) **For non-ABS control equipped master cylinders**, thread a Bleeder Tube, Special Tool 8358–1, into each outlet port. Tighten each tube to 17 N·m (145 in. lbs.) torque. Flex bleeder tubes and place open ends into mouth of fluid reservoir as far down as possible (Fig. 47).

(b) **For ABS equipped master cylinders**, thread one Adapter, Special Tool 8822–2, in each outlet port. Tighten Adapters to 17 N·m (145 in. lbs.) torque. Next, thread a Bleeder Tube, Special Tool 8358–1, into each Adapter. Tighten each tube to 17 N·m (145 in. lbs.) torque. Flex bleeder tubes and place open ends into mouth of fluid reservoir as far down as possible (Fig. 47).

NOTE: Make sure open ends of bleeder tubes stay below surface of brake fluid once reservoir is filled to proper level.

(3) Fill brake fluid reservoir with Mopar® brake fluid or equivalent conforming to DOT 3 (DOT 4 and DOT 4+ are acceptable) specifications. Make sure fluid level is above tips of bleeder tubes in reservoir to ensure no air is ingested during bleeding.

(4) Using a wooden dowel as a pushrod (Fig. 47), slowly depress master cylinder pistons, then release pressure, allowing pistons to return to released position. Repeat several times until all air bubbles are expelled. Make sure fluid level stays above tips of bleeder tubes in reservoir while bleeding.

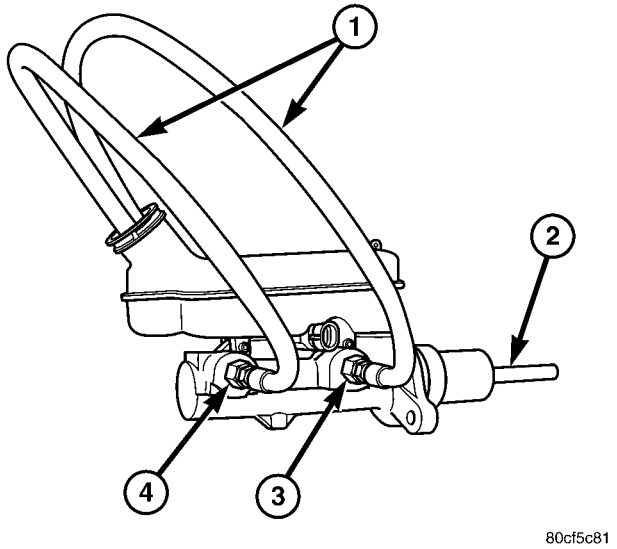

Fig. 47 Master Cylinder Set Up For Bleeding

1 - BLEEDER TUBES 8358
2 - WOODEN DOWEL
3 - ADAPTER 8822-2 (USE ONLY ON ABS EQUIPPED MASTER CYLINDERS)
4 - ADAPTER 8822-2 (USE ONLY ON ABS EQUIPPED MASTER CYLINDERS)

(5) Remove bleeder tubes from master cylinder outlet ports, then plug outlet ports and install fill cap on reservoir.

(6) Remove master cylinder from vise.

(7) Install master cylinder on vehicle. (Refer to 5 - BRAKES - BASE/HYDRAULIC/MECHANICAL/MASTER CYLINDER - INSTALLATION)

REMOVAL

REMOVAL - LHD

CAUTION: Vacuum in the power brake booster must be pumped down (removed) before removing master cylinder from power brake booster. This is necessary to prevent the power brake booster from sucking in any contamination as the master cylinder is removed. This can be done simply by pumping the brake pedal, with the vehicle's engine not running, until a firm feeling brake pedal is achieved.

(1) With engine not running, pump brake pedal until a firm pedal is achieved (4-5 strokes).

(2) Disconnect negative battery terminal.

(3) Disconnect positive battery terminal.

(4) Remove battery shield.

MASTER CYLINDER (Continued)

(5) Remove nut and clamp securing battery to tray, remove battery.

(6) Thoroughly clean all surfaces of the brake fluid reservoir and master cylinder. Use only solvent such as Mopar® Brake Parts Cleaner or equivalent.

(7) Remove wiring harness connector from brake fluid level switch in master cylinder brake fluid reservoir (Fig. 48).

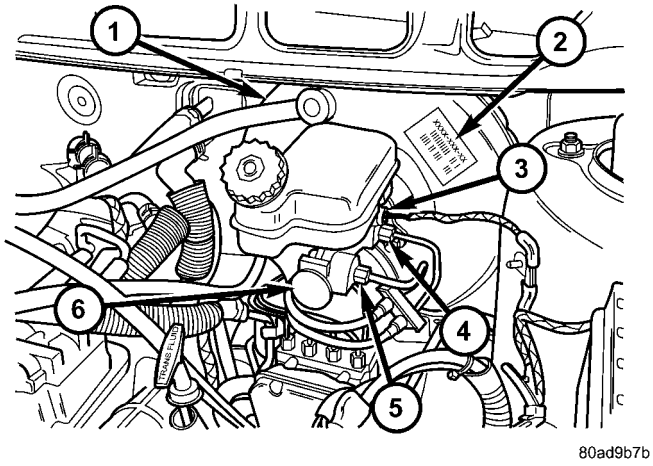

Fig. 48 MASTER CYLINDER AND BOOSTER

1 - POWER BRAKE BOOSTER
2 - BOOSTER IDENTIFICATION LABEL
3 - FLUID LEVEL SWITCH CONNECTOR
4 - PRIMARY BRAKE TUBE NUT
5 - SECONDARY BRAKE TUBE NUT
6 - MASTER CYLINDER

(8) Disconnect primary and secondary brake tubes from master cylinder housing (Fig. 48). Install sealing plugs in the now open brake tube outlet ports.

CAUTION: Before removing the master cylinder from the power brake vacuum booster, the master cylinder and vacuum booster must be thoroughly cleaned. This must be done to prevent dirt particles from falling into the power brake vacuum booster.

(9) Clean area where master cylinder assembly attaches to power brake booster. Use only a solvent such as Mopar® Brake Parts Cleaner or equivalent.

(10) Remove two nuts attaching master cylinder to power brake booster (Fig. 49).

(11) Slide master cylinder straight out of power brake booster.

CAUTION: A seal on the rear of the master cylinder is used to create the seal for holding vacuum in the power brake vacuum booster. The vacuum seal on the master cylinder MUST be replaced whenever the master cylinder is removed from the power brake vacuum booster.

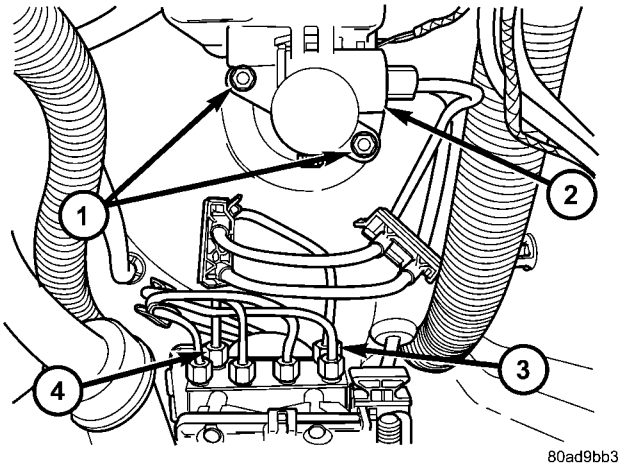

Fig. 49 MASTER CYLINDER MOUNTING

1 - MASTER CYLINDER MOUNTING NUTS
2 - MASTER CYLINDER
3 - SECONDARY TUBE NUT AT ICU
4 - PRIMARY TUBE NUT AT ICU

(12) Remove vacuum seal located on the mounting flange of the master cylinder. The vacuum seal is removed from master cylinder by **carefully** pulling it off the rear of master cylinder. **Do not attempt to pry the seal off the master cylinder by inserting a sharp tool between seal and master cylinder casting.**

REMOVAL - RHD

CAUTION: Vacuum in the power brake booster must be pumped down (removed) before removing master cylinder from power brake booster. This is necessary to prevent the power brake booster from sucking in any contamination as the master cylinder is removed. This can be done simply by pumping the brake pedal, with the vehicle's engine not running, until a firm feeling brake pedal is achieved.

(1) With engine not running, pump brake pedal until a firm pedal is achieved (4 or 5 strokes).

(2) Disconnect negative battery terminal.

(3) Disconnect positive battery terminal.

(4) Remove battery shield.

(5) Remove nut and clamp securing battery to tray, remove battery.

(6) Thoroughly clean all surfaces of the brake fluid reservoir and master cylinder. Use only solvent such as Mopar® Brake Parts Cleaner or equivalent.

(7) Remove wiring harness connector from brake fluid level switch in master cylinder brake fluid reservoir (Fig. 46).

MASTER CYLINDER (Continued)

(8) Disconnect primary and secondary brake tubes from master cylinder housing (Fig. 50). Install sealing plugs in the now open brake tube outlet ports.

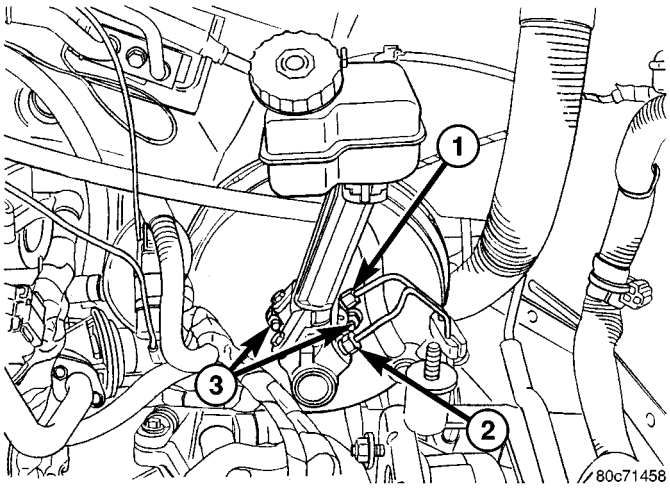

Fig. 50 RHD MASTER CYLINDER MOUNTING

1 - PRIMARY BRAKE TUBE NUT
2 - SECONDARY BRAKE TUBE NUT
3 - MASTER CYLINDER MOUNTING NUTS

CAUTION: Before removing the master cylinder from the power brake vacuum booster, the master cylinder and vacuum booster must be thoroughly cleaned. This must be done to prevent dirt particles from falling into the power brake vacuum booster.

(9) Clean area where master cylinder assembly attaches to power brake booster. Use only a solvent such as Mopar® Brake Parts Cleaner or equivalent.

(10) Remove two nuts attaching master cylinder to power brake booster (Fig. 50).

(11) Slide master cylinder straight out of power brake booster.

CAUTION: A seal on the rear of the master cylinder is used to create the seal for holding vacuum in the power brake vacuum booster. The vacuum seal on the master cylinder MUST be replaced whenever the master cylinder is removed from the power brake vacuum booster.

(12) Remove vacuum seal located on the mounting flange of the master cylinder. The vacuum seal is removed from master cylinder by **carefully** pulling it off the rear of master cylinder. **Do not attempt to pry the seal off the master cylinder by inserting a sharp tool between seal and master cylinder casting.**

DISASSEMBLY - MASTER CYLINDER (FLUID RESERVOIR)

(1) Clean master cylinder housing and brake fluid reservoir. Use only a solvent such as Mopar Brake Parts Cleaner or an equivalent.

(2) Remove brake fluid reservoir cap. Using a syringe or equivalent type tool empty as much brake fluid as possible from the reservoir.

CAUTION: When removing fluid reservoir from the master cylinder, do not pry off using any type of tool. This can damage the fluid reservoir or master cylinder housing.

(3) Remove the master cylinder assembly from the power brake vacuum booster. (Refer to 5 - BRAKES - BASE/HYDRAULIC/MECHANICAL/MASTER CYLINDER - REMOVAL).

(4) Mount the master cylinder in a vise using the master cylinder mounting flange.

(5) Using correct size pin punch, remove the two retaining pins between the fluid reservoir and master cylinder housing (Fig. 51).

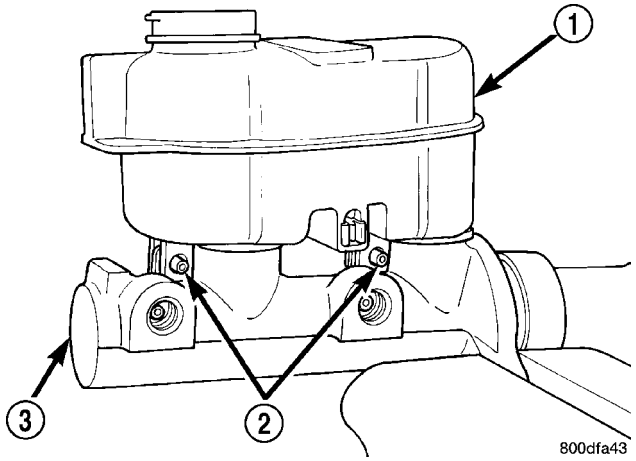

Fig. 51 Fluid Reservoir Retaining Pins (Typical)

1 - FLUID RESERVOIR
2 - RETAINING PINS
3 - MASTER CYLINDER

(6) Rock the brake fluid reservoir from side to side while pulling up to remove it from the seal grommets in master cylinder housing.

(7) Remove the two master cylinder housing to brake fluid reservoir seal grommets (Fig. 52).

MASTER CYLINDER (Continued)

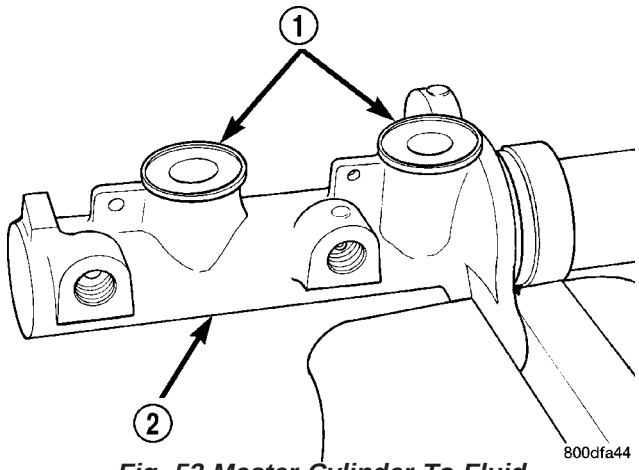

Fig. 52 Master Cylinder To Fluid Reservoir Seal Grommets

1 - SEAL GROMMETS
2 - MASTER CYLINDER

ASSEMBLY - MASTER CYLINDER (FLUID RESERVOIR)

(1) Install new master cylinder housing to brake fluid reservoir sealing grommets in master cylinder housing (Fig. 52).

(2) Lubricate reservoir mounting area with fresh clean brake fluid. Place reservoir in position over sealing grommets. Seat reservoir into sealing grommets using a rocking motion while firmly pressing down on fluid reservoir.

(3) Be sure fluid reservoir is positioned properly on master cylinder. **Bottom of fluid reservoir is to be touching the top of both sealing grommets when properly installed on master cylinder housing.**

(4) Install the two fluid reservoir to master cylinder retaining pins (Fig. 51).

(5) Install the master cylinder assembly on the power brake booster. (Refer to 5 - BRAKES/HYDRAULIC/MECHANICAL/MASTER CYLINDER - INSTALLATION)

(6) Fill fluid reservoir to its proper level as indicated on the side of the fluid reservoir.

INSTALLATION

INSTALLATION - LHD

CAUTION: Different types of master cylinders are used on this vehicle depending on brake options. If a new master cylinder is being installed, be sure it is the correct master cylinder for the type of brake system the vehicle is equipped with.

CAUTION: When replacing the master cylinder on a vehicle, a NEW vacuum seal MUST be installed on the master cylinder.

(1) Install a NEW vacuum seal on master cylinder making sure seal fits squarely in groove of master cylinder casting.

(2) Position master cylinder on studs of power brake booster, aligning booster push rod with master cylinder piston.

(3) Install the two master cylinder mounting nuts (Fig. 49). Tighten both mounting nuts to a torque of 25 N·m (225 in. lbs.).

CAUTION: When tightening the primary and secondary brake tube nuts at master cylinder, be sure brake tubes do not contact any other components within the vehicle and that there is slack in the flexible sections of the tubes. This is required due to the movement between the ABS ICU and the master cylinder while the vehicle is in motion.

(4) Connect primary and secondary brake tubes to master cylinder primary and secondary ports (Fig. 48). Brake tubes must be held securely when tightened to control orientation of flex section. Tighten tube nuts to a torque of 17 N·m (145 in. lbs.).

(5) Install wiring harness connector to brake fluid level switch mounted in brake fluid reservoir (Fig. 48).

(6) Install battery, clamp and nut.

(7) Install battery shield.

(8) Connect positive battery terminal.

(9) Connect negative battery terminal.

(10) Fill master cylinder with clean, fresh Mopar® Brake Fluid or equivalent.

(11) Road test vehicle to ensure proper operation of brakes.

INSTALLATION - RHD

CAUTION: Different types of master cylinders are used on this vehicle depending on brake options. If a new master cylinder is being installed, be sure it is the correct master cylinder for the type of brake system the vehicle is equipped with.

CAUTION: When replacing the master cylinder on a vehicle, a NEW vacuum seal MUST be installed on the master cylinder.

(1) Install a NEW vacuum seal on master cylinder making sure seal fits squarely in groove of master cylinder casting.

(2) Position master cylinder on studs of power brake booster, aligning booster push rod with master cylinder piston.

(3) Install the two master cylinder mounting nuts (Fig. 50). Tighten both mounting nuts to a torque of 25 N·m (225 in. lbs.).

MASTER CYLINDER (Continued)

CAUTION: When tightening the primary and secondary brake tube nuts at master cylinder, be sure brake tubes do not contact any other components within the vehicle and that there is slack in the flexible sections of the tubes. This is required due to the movement between the ABS ICU and the master cylinder while the vehicle is in motion.

(4) Connect primary and secondary brake tubes to master cylinder primary and secondary ports (Fig. 50). Brake tubes must be held securely when tightened to control orientation of flex section. Tighten tube nuts to a torque of 17 N·m (145 in. lbs.).

(5) Install wiring harness connector to brake fluid level switch mounted in brake fluid reservoir (Fig. 46).

(6) Install battery, clamp and nut.

(7) Install battery shield.

(8) Connect positive battery terminal.

(9) Connect negative battery terminal.

(10) Fill master cylinder with clean, fresh Mopar® Brake Fluid or equivalent.

(11) Road test vehicle to ensure proper operation of brakes.

PEDALS - ADJUSTABLE

REMOVAL

NOTE: Before proceeding, review all Steering Column and Airbag Warnings and Cautions. (Refer to 19 - STEERING/COLUMN - WARNING)(Refer to 8 - ELECTRICAL/RESTRAINTS - WARNING)

(1) Move driver's seat to full rearward position.

(2) Disconnect negative battery cable from battery post and isolate.

(3) Remove throttle cable from throttle body lever. (Refer to 14 - FUEL SYSTEM/FUEL INJECTION/ THROTTLE CONTROL CABLE - REMOVAL)

(4) Remove screws securing lower steering column cover/knee blocker, then remove it (Fig. 53).

(5) Disconnect parking brake release link at release handle.

(6) Compress tabs on sides of data link diagnostic connector and remove it from knee blocker reinforcement plate.

(7) Remove screws securing knee blocker reinforcement plate in place, then remove reinforcement plate (Fig. 53).

(8) Remove hood release from lower left reinforcement.

(9) Remove screws securing instrument panel lower left reinforcement in place, then remove reinforcement (Fig. 54).

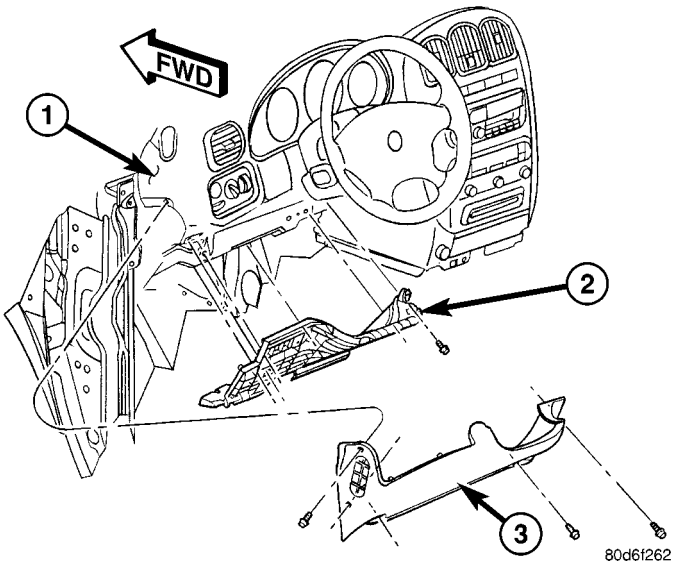

Fig. 53 Lower Steering Column Cover And Reinforcement

1 - INSTRUMENT PANEL
2 - REINFORCEMENT PLATE
3 - LOWER STEERING COLUMN COVER/KNEE BLOCKER

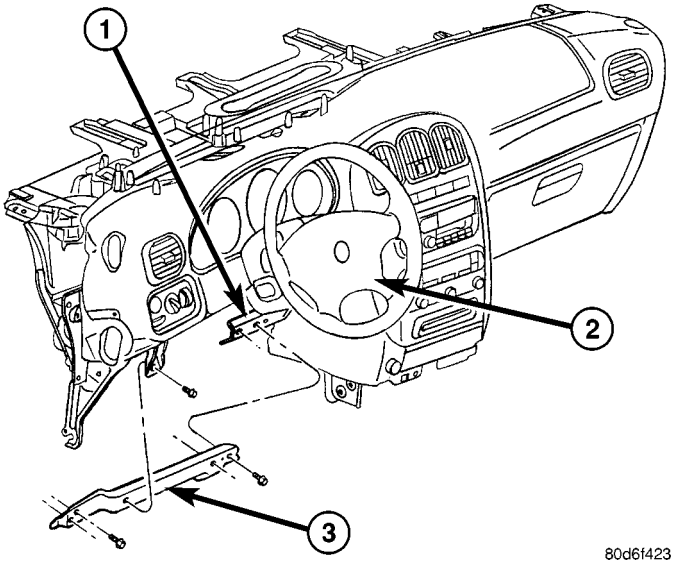

Fig. 54 Instrument Panel Lower Left Reinforcement

1 - INSTRUMENT PANEL LOWER REINFORCEMENT
2 - STEERING WHEEL
3 - LOWER LEFT REINFORCEMENT

(10) Remove brake lamp switch. **Discard original switch; it must not be reused.** (Refer to 8 - ELECTRICAL/LAMPS/LIGHTING - EXTERIOR/BRAKE LAMP SWITCH - REMOVAL)

(11) Remove upper and lower steering column shrouds. (Refer to 19 - STEERING/COLUMN/ LOWER SHROUD - REMOVAL)

PEDALS - ADJUSTABLE (Continued)

(12) Disconnect wiring harness connectors (as equipped) from clockspring, multi-function switch, SKIM module, ignition switch and BTSI solenoid.

(13) If equipped, disconnect PRNDL cable from shift lever and column bracket (Fig. 55).

(14) Disconnect shift cable at shift lever mechanism pin (Fig. 55).

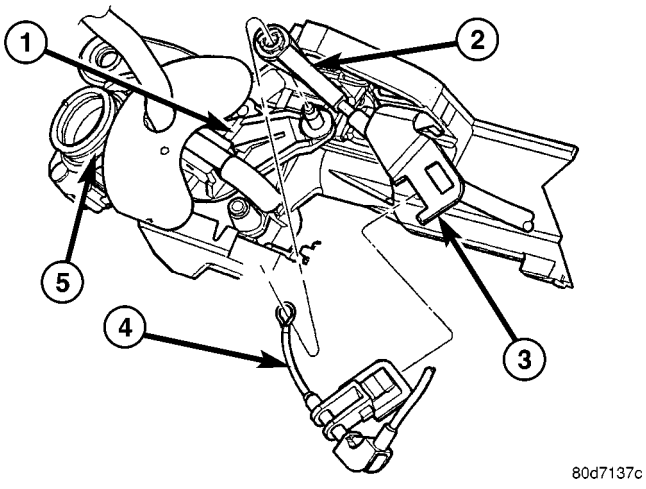

Fig. 55 Shift Cable At Steering Column

1 - SHIFT LEVER MECHANISM
2 - SHIFT CABLE
3 - BRACKET
4 - PRNDL CABLE (IF EQUIPPED)
5 - STEERING COLUMN

(15) Remove pinch side clip, then remove shift cable from bracket on column.

(16) Place front wheels in STRAIGHT-AHEAD position, then secure steering wheel to column in this position using appropriate retaining method.

(17) Remove pinch bolt securing column coupling to intermediate shaft (Fig. 56).

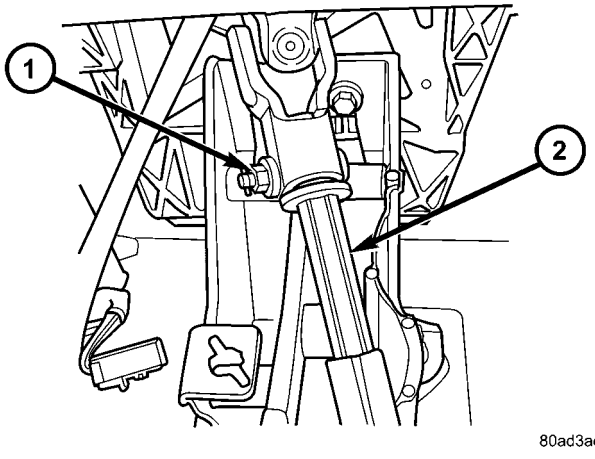

Fig. 56 Pinch Bolt

1 - PINCH BOLT
2 - STEERING COLUMN

(18) Loosen two lower steering column mounting nuts.

(19) Remove two upper steering column mounting nuts.

(20) Remove steering column assembly.

(21) Remove dash seal silencer shell over steering column intermediate shaft (Fig. 57).

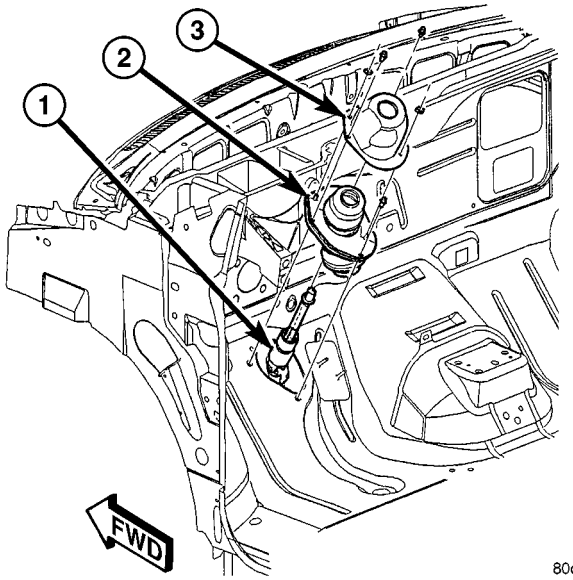

Fig. 57 Intermediate Shaft Dash Seal And Silencer Shell

1 - INTERMEDIATE SHAFT
2 - DASH SEAL
3 - SILENCER SHELL

(22) Remove two nuts securing brake lamp switch bracket to pedal assembly. Remove bracket.

(23) Disconnect wiring connector connecting vehicle wiring harness connector to pedal wiring harness (Fig. 58).

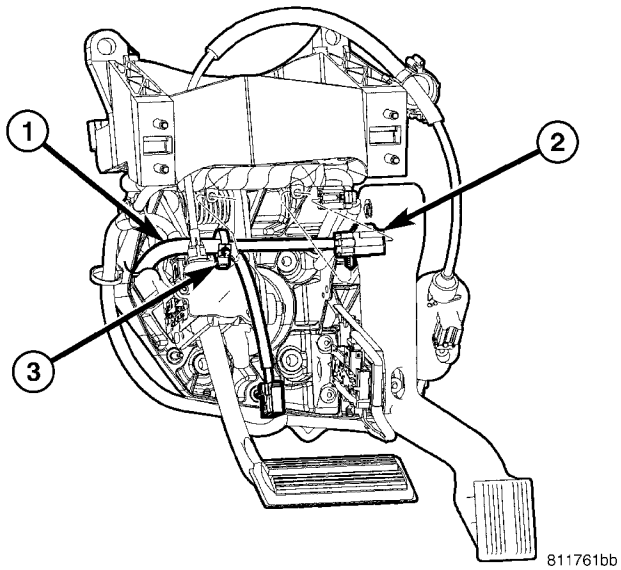

Fig. 58 Wiring Harness Connection

1 - VEHICLE WIRING HARNESS
2 - WIRING CONNECTOR
3 - ROUTING LOOP

PEDALS - ADJUSTABLE (Continued)

(24) Unfasten routing clips retaining vehicle wiring harness to pedal wiring harness (Fig. 58).

(25) Remove power brake booster input rod from brake pedal pin by performing following:

(a) Position small screwdriver between center tang on retaining clip and brake pedal pin (Fig. 59).

(b) Rotate screwdriver, moving retaining clip center tang enough to allow it to pass over end of brake pedal pin, then slide retaining clip off brake pedal pin.

(c) Discard retaining clip. **Retaining clip must not be reused. Install NEW retaining clip when assembling.**

(d) Slide booster input rod off pedal pin.

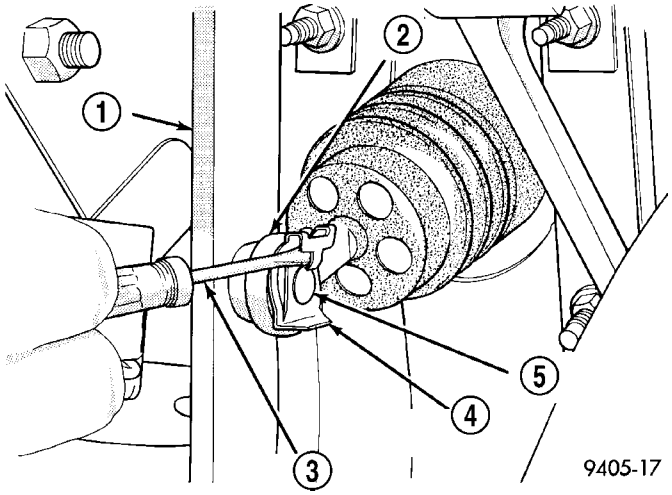

Fig. 59 Input Rod Brake Pedal Retaining Clip Removal

1 - BRAKE PEDAL
2 - INPUT ROD
3 - SCREWDRIVER
4 - RETAINING CLIP
5 - BRAKE PEDAL PIN

(26) Disconnect pedal adjuster cable at brake pedal adjustment gear box (Fig. 60).

(27) Remove pedal adjuster cable from routing loop on steering column bracket (Fig. 60), then pull gear box end of cable upward, out of steering column bracket, and down right side of pedals assembly.

(28) Remove four nuts attaching power brake booster and pedals assembly to dash panel (Fig. 61).

(29) Remove two upper mounting bolts attaching pedals assembly to steering column support bracket on dash.

(30) Disconnect throttle cable retainer at accelerator pedal, then remove cable from pedal.

(31) Remove adjustable pedals assembly.

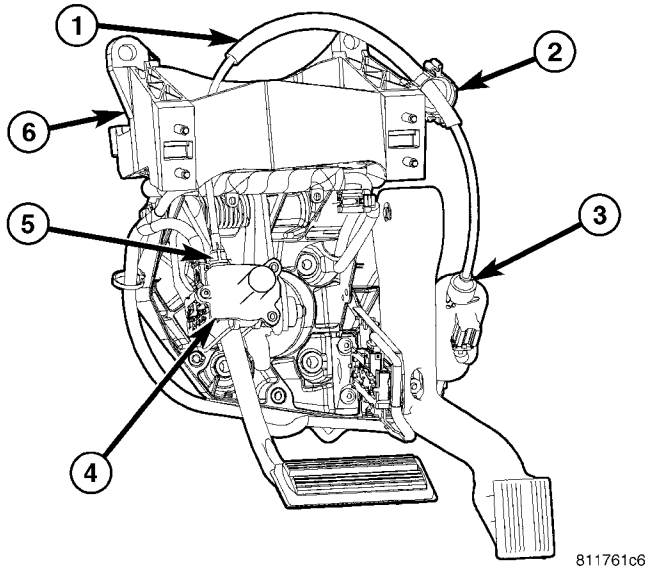

Fig. 60 Drive Cable Routing

1 - ADJUSTER CABLE
2 - ROUTING LOOP
3 - CABLE ATTACHMENT AT MOTOR
4 - GEAR DRIVE
5 - CABLE ATTACHMENT AT GEAR BOX
6 - STEERING COLUMN BRACKET

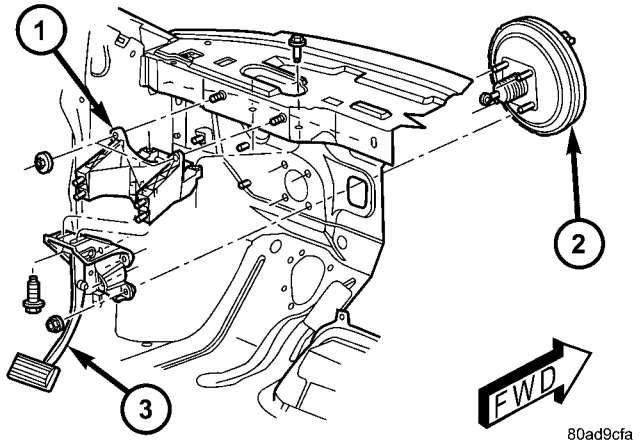

Fig. 61 Booster Mounting (Typical)

1 - DASH BRACKET
2 - POWER BRAKE BOOSTER
3 - BRAKE PEDAL ASSEMBLY

PEDALS - ADJUSTABLE (Continued)

INSTALLATION

(1) Install adjustable pedals assembly under instrument panel.

(2) Attach throttle cable to accelerator pedal using cable retainer.

(3) Install two upper mounting bolts attaching pedals assembly to steering column support bracket on dash panel. **Do not fully tighten at this time.**

(4) Install four nuts attaching pedals assembly and power brake booster to dash panel (Fig. 61).

(5) Tighten four booster mounting nuts and two upper mounting bolts to 28 N·m (21 ft. lbs.) torque.

(6) Route pedal adjuster cable up and over right side of pedals assembly and steering column bracket, then down through hole in steering column bracket as shown (Fig. 60). Attach end of cable to gear box.

(7) Place adjuster cable through loop on right side of steering column bracket as shown (Fig. 60).

(8) Install booster input rod onto brake pedal pin and install a NEW retaining clip.

(9) Connect wiring connector connecting vehicle wiring harness to pedal wiring harness (Fig. 58).

(10) Connect routing clips retaining vehicle wiring harness to pedal wiring harness (Fig. 58).

(11) Install brake lamp switch bracket on pedals assembly. Tighten mounting nuts to 6 N·m (50 in. lbs.) torque.

(12) Install dash seal silencer shell over steering column intermediate shaft and fasten in place (Fig. 57).

(13) Install steering column onto lower mounting studs with nuts started, then install column onto upper mounting studs and install two upper mounting nuts. Tighten upper, then lower mounting nuts to 12 N·m (105 in. lbs.) torque.

(14) Install column shaft coupling onto intermediate shaft and install pinch bolt. Make sure rounded side of intermediate shaft is matched to the curvature of the coupling. Tighten pinch bolt to 28 N·m (250 in. lbs.) torque.

(15) Remove retainer holding steering wheel in place on steering column.

(16) Attach shift cable to bracket on column.

(17) Connect shift cable end to shift lever mechanism pin (Fig. 55).

(18) If equipped, connect PRNDL cable to end of shift lever mechanism pin and column bracket (Fig. 55).

(19) Connect column wiring harness connectors (as equipped) to SKIM, BTSI solenoid, ignition switch, multi-function switch, and clockspring.

(20) Install lower and upper steering column shrouds. (Refer to 19 - STEERING/COLUMN/ LOWER SHROUD - INSTALLATION)

CAUTION: Do not reuse the original brake lamp switch. The switch can only be adjusted once. That is during initial installation of the switch. If the switch is not adjusted properly or has been removed for some service, a new switch must be installed and adjusted.

(21) Install and adjust NEW brake lamp switch. (Refer to 8 - ELECTRICAL/LAMPS/LIGHTING - EXTERIOR/BRAKE LAMP SWITCH - INSTALLATION)

(22) Install instrument panel lower left reinforcement (Fig. 54).

(23) Attach hood release to lower left reinforcement.

(24) Install knee blocker reinforcement plate (Fig. 53).

(25) Connect parking brake release link to release handle.

(26) Install data link diagnostic connector to mounting hole in reinforcement plate.

(27) Install lower steering column cover/knee blocker (Fig. 53).

(28) Install throttle cable onto throttle body lever. (Refer to 14 - FUEL SYSTEM/FUEL INJECTION/ THROTTLE CONTROL CABLE - INSTALLATION)

NOTE: When reconnecting the battery on a vehicle that has had the airbag module removed, the following procedure should be used.

(29) Reconnect ground cable to negative post of battery following special Diagnosis And Testing procedure. (Refer to 8 - ELECTRICAL/RESTRAINTS - DIAGNOSIS AND TESTING)

(30) Test operation of adjustable pedals and all functions that are steering column operated. If applicable, reset radio and clock.

(31) Road test the vehicle to ensure proper operation of steering and brake systems.

PEDAL TORQUE SHAFT - RHD

REMOVAL

(1) Remove the instrument panel. (Refer to 23 - BODY/INSTRUMENT PANEL/INSTRUMENT PANEL ASSEMBLY - REMOVAL)

(2) Remove the HVAC housing. (Refer to 24 - HEATING & AIR CONDITIONING/DISTRIBUTION/ HVAC HOUSING - REMOVAL)

(3) Remove the retaining clip at the torque shaft end of the brake pedal-to-torque shaft link. Remove the link from the torque shaft. Discard the retaining clip. It is not to be reused. Replace with a new clip when reassembled.

(4) Locate the booster input rod-to-brake pedal torque shaft connection and remove the retaining clip (Fig. 62). Discard the retaining clip. It is not to be reused. Replace with a new clip when reassembled.

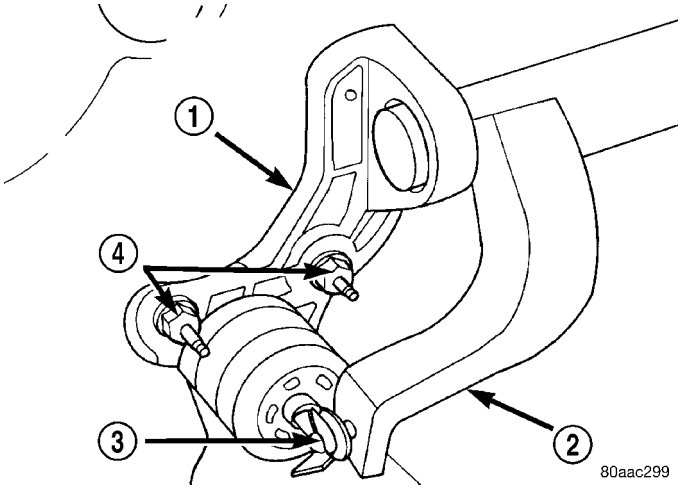

Fig. 62 POWER BRAKE BOOSTER BRACKET

1 - BOOSTER BRACKET
2 - PEDAL TORQUE SHAFT
3 - RETAINING CLIP
4 - BOOSTER MOUNTING NUTS

(5) Remove the four (4) brake booster retaining nuts from inside the passenger compartment (Fig. 63).

(6) Remove the retaining nut from the brake booster bracket located above the booster in the engine compartment (Fig. 63).

(7) Remove the power brake booster bracket.

(8) Rotate the pedal torque shaft and remove it out the left side of the vehicle.

INSTALLATION

(1) Lubricate both ends of the torque shaft with MS-4517 Lubricant or equivalent and install the torque shaft from the left side reversing the removal procedure.

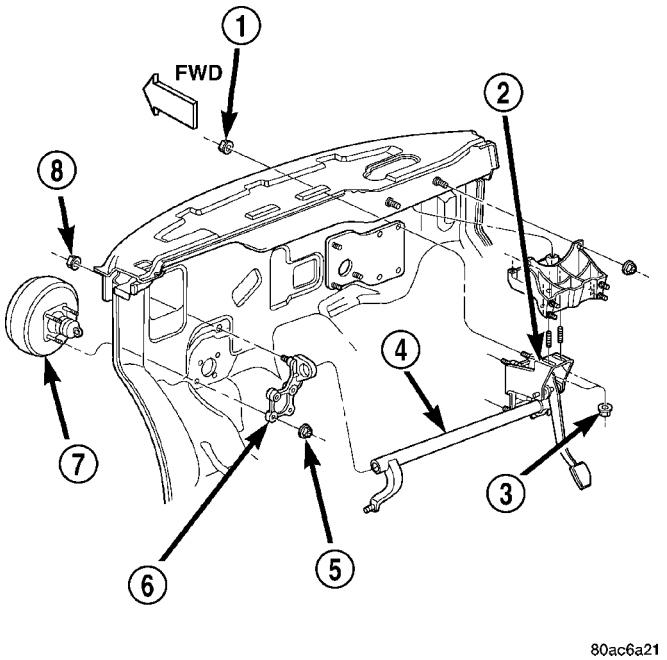

Fig. 63 BOOSTER, TORQUE SHAFT AND PEDAL MOUNTING

1 - PEDAL MOUNTING NUT
2 - BRAKE PEDAL ASSEMBLY
3 - PEDAL MOUNTING NUT
4 - PEDAL TORQUE SHAFT
5 - BOOSTER MOUNTING NUT
6 - BOOSTER BRACKET
7 - POWER BRAKE BOOSTER
8 - BOOSTER BRACKET MOUNTING NUT

(2) Install the brake booster bracket on the left end of the shaft.

(3) Install the retaining nut for the brake booster bracket in the engine compartment. Tighten the mounting nut to a torque of 29 N·m (250 in. lbs.).

(4) Install the four brake booster retaining nuts inside the passenger compartment. Tighten the mounting nuts to a torque of 29 N·m (250 in. lbs.).

(5) Using lubriplate, or equivalent, coat the surface of the brake pedal torque shaft pin where it contacts the booster input rod. Also coat the surface of the brake pedal torque shaft pin where it contacts the brake pedal link.

CAUTION: When installing the power brake booster input rod on the brake pedal torque shaft pin, do not reuse the old retaining clip.

(6) Install booster input rod on brake pedal torque shaft pin and install a NEW retaining clip (Fig. 62).

CAUTION: When installing the brake pedal link on the brake pedal torque shaft pin, do not reuse the old retaining clip.

PEDAL TORQUE SHAFT - RHD (Continued)

(7) Connect the brake pedal link to the torque shaft. Install a NEW retaining clip at the torque shaft end of the brake pedal-to-torque shaft link.

(8) Install the HVAC housing. (Refer to 24 - HEATING & AIR CONDITIONING/DISTRIBUTION/HVAC HOUSING - INSTALLATION)

(9) Install the instrument panel. (Refer to 23 - BODY/INSTRUMENT PANEL/INSTRUMENT PANEL ASSEMBLY - INSTALLATION)

CAUTION: Do not reuse the original brake lamp switch. The switch can only be adjusted once. That is during initial installation of the switch. If the switch is not adjusted properly or has been removed for some service, a new switch must be installed and adjusted.

(10) Remove and replace the brake lamp switch with a NEW switch. (Refer to 8 - ELECTRICAL/LAMPS/LIGHTING - EXTERIOR/BRAKE LAMP SWITCH - REMOVAL), (Refer to 8 - ELECTRICAL/LAMPS/LIGHTING - EXTERIOR/BRAKE LAMP SWITCH - INSTALLATION)

(11) Road test vehicle to ensure proper operation of the brakes.

POWER BRAKE BOOSTER

DESCRIPTION

The power brake booster mounts on the engine compartment side of the dash panel. It is connected to the brake pedal by the input (push) rod (Fig. 64). The master cylinder is bolted to the front of the booster. A vacuum line connects the power brake booster to the intake manifold.

All Left-Hand-Drive (LHD) vehicles use a 270 mm single diaphragm vacuum power brake booster. All Right-Hand-Drive (RHD) vehicles use a 225/200 mm tandem diaphragm vacuum power brake booster.

Vehicles equipped with Disc/Disc brakes use a different power brake booster than vehicles equipped with Disc/Drum brakes. Differences between the two are internal. Service is the same for all boosters.

The power brake booster can be identified by the tag attached to the body of the booster (Fig. 65). This tag contains the production part number, the date it was built, and who the manufacturer of the power brake booster is.

NOTE: The power brake booster assembly is not a repairable component and must be replaced as a complete assembly if found to be faulty in any way. The check valve located on the power brake booster face is not repairable, but it can be replaced separately from the power brake booster.

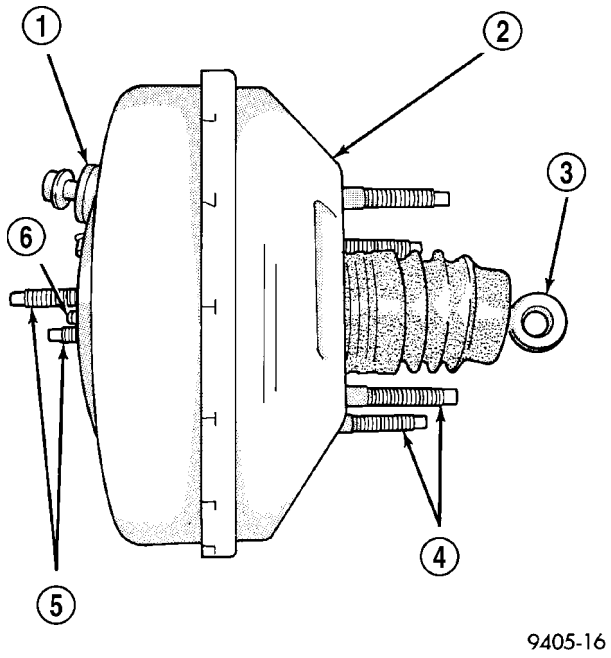

Fig. 64 Power Brake Booster (Typical)

1 - VACUUM CHECK VALVE
2 - POWER BRAKE BOOSTER ASSEMBLY
3 - INPUT ROD
4 - POWER BOOSTER ASSEMBLY TO DASH PANEL MOUNTING STUDS (4)
5 - MASTER CYLINDER MOUNTING STUDS (2)
6 - OUTPUT ROD

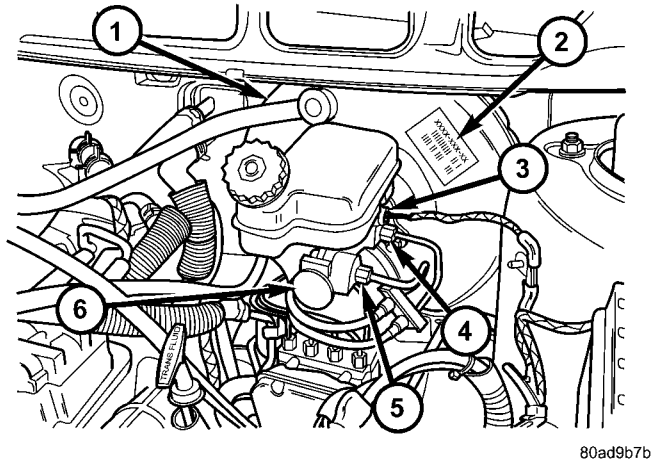

Fig. 65 MASTER CYLINDER AND BOOSTER

1 - POWER BRAKE BOOSTER
2 - BOOSTER IDENTIFICATION LABEL
3 - FLUID LEVEL SWITCH CONNECTOR
4 - PRIMARY BRAKE TUBE NUT
5 - SECONDARY BRAKE TUBE NUT
6 - MASTER CYLINDER

The different engine combinations used in this vehicle require different vacuum hose routings to the power brake booster. All vacuum hoses must be routed from the engine to the power brake booster without kinks or excessively tight bends.

POWER BRAKE BOOSTER (Continued)

OPERATION

The power brake booster reduces the amount of force required by the driver to obtain the necessary hydraulic pressure to stop a vehicle.

The power brake booster is vacuum operated. The vacuum is supplied from the intake manifold on the engine through a vacuum hose and the power brake booster check valve (Fig. 64).

As the brake pedal is depressed, the power brake booster's input rod moves forward (Fig. 64). This opens and closes valves in the power booster allowing atmospheric pressure to enter on one side of a diaphragm. Engine vacuum is always present on the other side. This difference in pressure forces the output rod of the power brake booster out against the primary piston of the master cylinder. As the pistons in the master cylinder move forward this creates the hydraulic pressure in the brake system.

DIAGNOSIS AND TESTING - POWER BRAKE BOOSTER

BASIC TEST

(1) With engine off, depress and release the brake pedal several times to purge all vacuum from the power brake booster.

(2) Depress and hold the pedal with light effort (15 to 25 lbs. pressure), then start the engine.

The pedal should fall slightly, then hold. Less effort should be needed to apply the pedal at this time. If the pedal fell as indicated, perform the VACUUM LEAK TEST listed after the BASIC TEST. If the pedal did not fall, continue on with this BASIC TEST.

(3) Disconnect the vacuum hose on the vacuum check valve, then place a vacuum gauge in line between the vacuum hose and the valve.

(4) Start the engine.

(5) When the engine is at warm operating temperature, allow it to idle and check the vacuum at the gauge.

If the vacuum supply is 12 inches Hg (40.5 kPa) or more, the power brake booster is defective and must be replaced. If the vacuum supply is below 12 inches Hg, continue on with this BASIC TEST.

(6) Shut off the engine.

(7) Connect the vacuum gauge to the vacuum reference port on the engine intake manifold.

(8) Start the engine and observe the vacuum gauge.

If the vacuum is still low, check the engine tune and repair as necessary. If the vacuum is above 12 inches Hg, the hose or check valve to the booster has a restriction or leak.

Once an adequate vacuum supply is obtained, repeat the BASIC TEST.

VACUUM LEAK TEST

(1) Disconnect the vacuum hose on the vacuum check valve, then place a vacuum gauge in line between the vacuum hose and the valve.

(2) Start the engine.

(3) Allow the engine to warm up to normal operating temperature and engine idle.

(4) Using vacuum line pliers, close off the vacuum supply hose near the booster, but before the vacuum gauge, then observe the vacuum gauge.

If the vacuum drop exceeds 1.0 inch Hg (3.3 kPa) in one minute, repeat the above steps to confirm the reading. The vacuum loss should be less than 1.0 inch Hg in one minute time span. If the loss is more than 1.0 inch Hg, replace the power brake booster. If it is not, continue on with this test.

(5) Remove the pliers from the hose temporarily.

(6) Apply light effort (approximately 15 lbs. of force) to the brake pedal and hold the pedal steady. Do not move the pedal once the pressure is applied or the test results may vary.

(7) Have an assistant reattach the vacuum line pliers to the vacuum supply hose.

(8) Allow 5 seconds for stabilization, then observe the vacuum gauge.

If the vacuum drop exceeds 3.0 inches Hg (10 kPa) in 15 seconds, repeat the above steps to confirm the reading. The vacuum loss should be less than 3.0 inches Hg in 15 seconds time span. If the loss is more than 3.0 inches Hg, replace the power brake booster. If it is not, the booster is not defective.

(9) Remove the pliers and vacuum gauge.

REMOVAL

REMOVAL - LHD

CAUTION: Reserve vacuum in power brake booster must be pumped down (removed) before removing master cylinder from booster. This is necessary to prevent booster from sucking in any contamination as master cylinder is removed. This can be done simply by pumping the brake pedal, with the vehicle's engine not running, until a firm feeling brake pedal is achieved.

(1) With engine not running, pump the brake pedal until a firm pedal is achieved (4-5 strokes).

(2) Remove negative battery cable terminal from battery.

(3) Remove positive battery cable terminal from battery.

(4) Remove battery thermal guard shield.

(5) Remove battery clamp, nut and battery from the battery tray.

POWER BRAKE BOOSTER (Continued)

(6) Remove screw securing engine coolant filler tube to battery tray.

(7) If the vehicle is equipped with speed control, disconnect the vacuum hose at the vacuum tank built into the battery tray.

(8) Remove the two nuts and one bolt securing battery tray in place. Remove battery tray.

(9) If vehicle is equipped with speed control:

(a) Disconnect wiring harness connector from the speed control servo.

(b) Remove the two servo mounting nuts.

(c) Lay speed control servo off to the side, out of the way.

(10) Remove the wiper module (unit). (Refer to 8 - ELECTRICAL/WIPERS/WASHERS/WIPER MODULE - REMOVAL)

(11) Disconnect wiring harness connector from brake fluid level switch in master cylinder fluid reservoir (Fig. 66).

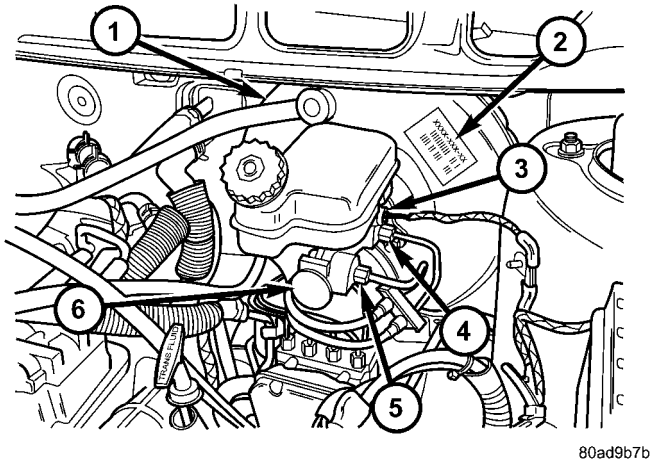

Fig. 66 Master Cylinder And Booster

1 - POWER BRAKE BOOSTER
2 - BOOSTER IDENTIFICATION LABEL
3 - FLUID LEVEL SWITCH CONNECTOR
4 - PRIMARY BRAKE TUBE NUT
5 - SECONDARY BRAKE TUBE NUT
6 - MASTER CYLINDER

CAUTION: Before removing the master cylinder from the power brake vacuum booster, the master cylinder and vacuum booster must be thoroughly cleaned. This must be done to prevent dirt particles from falling into the power brake vacuum booster.

(12) Clean area where master cylinder assembly attaches to power brake booster. Use only a solvent such as Mopar® Brake Parts Cleaner or equivalent.

(13) Disconnect primary and secondary brake tubes from ABS integrated control unit or non-ABS junction block (Fig. 67). Install sealing plugs in the now open brake tube ports and install caps on ends of tubes.

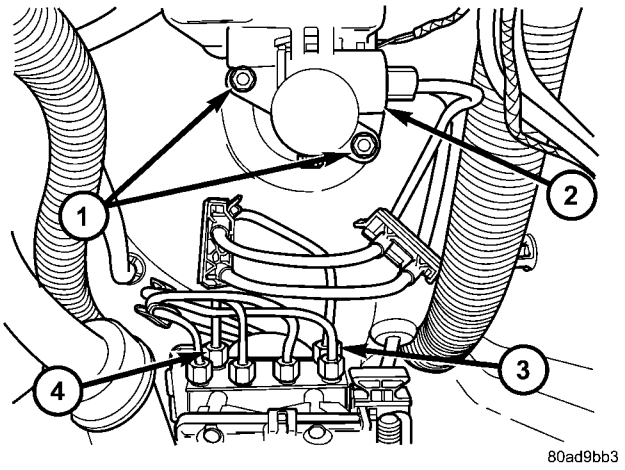

Fig. 67 Master Cylinder Mounting

1 - MASTER CYLINDER MOUNTING NUTS
2 - MASTER CYLINDER
3 - SECONDARY TUBE NUT AT ICU
4 - PRIMARY TUBE NUT AT ICU

NOTE: It is not necessary to remove the brake tubes from the master cylinder when removing the master cylinder from the vacuum booster.

(14) Remove two nuts attaching master cylinder to power brake booster (Fig. 67).

(15) Slide master cylinder straight out of power brake booster. Remove master cylinder with primary and secondary tubes from vehicle.

CAUTION: A seal on the rear of the master cylinder is used to create the seal for holding vacuum in the power brake vacuum booster. The vacuum seal on the master cylinder MUST be replaced whenever the master cylinder is removed from the power brake vacuum booster.

(16) Disconnect vacuum hose from check valve located on vacuum booster. **DO NOT REMOVE CHECK VALVE FROM POWER BRAKE BOOSTER.**

POWER BRAKE BOOSTER (Continued)

(17) Inside vehicle, remove silencer panel under instrument panel below steering column.

(18) Locate the booster input rod to brake pedal connection under the instrument panel. Position a small screwdriver between the center tang on the power brake booster input rod to brake pedal pin retaining clip (Fig. 68).

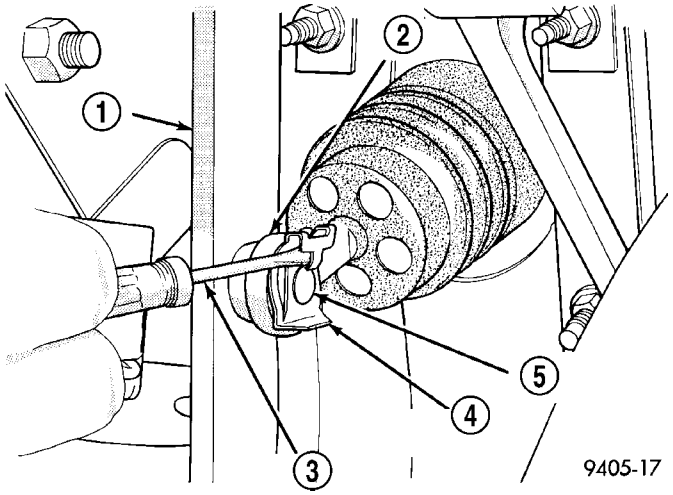

Fig. 68 Vacuum Booster Input Rod Retaining Pin

1 - BRAKE PEDAL
2 - INPUT ROD
3 - SCREWDRIVER
4 - RETAINING CLIP
5 - BRAKE PEDAL PIN

(19) Rotate screwdriver enough to allow retaining clip center tang to pass over end of brake pedal pin. Then pull retaining clip off brake pedal pin. **Discard retaining clip. It is not to be reused. Replace only with a new retaining clip when assembling.**

(20) Slide booster input rod off pedal pin.

(21) Remove the four nuts attaching power brake booster to dash panel (Fig. 69).

(22) Slide power brake booster forward and remove through engine compartment (Fig. 70).

CAUTION: Do not attempt to disassemble the power brake vacuum booster. It is serviced ONLY as a complete assembly.

REMOVAL - RHD

CAUTION: Reserve vacuum in power brake booster must be pumped down (removed) before removing master cylinder from booster. This is necessary to prevent booster from sucking in any contamination as master cylinder is removed. This can be done simply by pumping the brake pedal, with the vehicle's engine not running, until a firm feeling brake pedal is achieved.

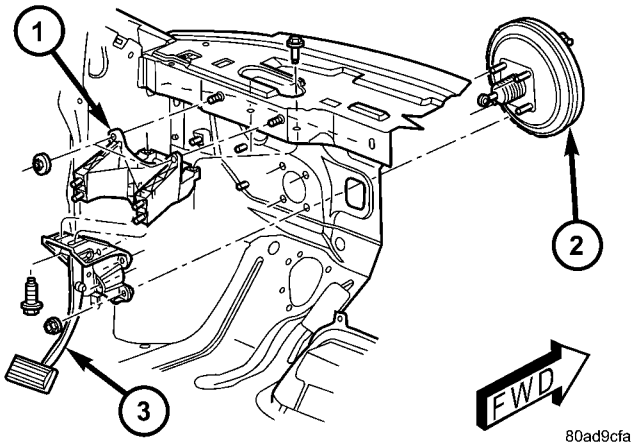

Fig. 69 Booster Mounting

1 - DASH BRACKET
2 - POWER BRAKE BOOSTER
3 - BRAKE PEDAL ASSEMBLY

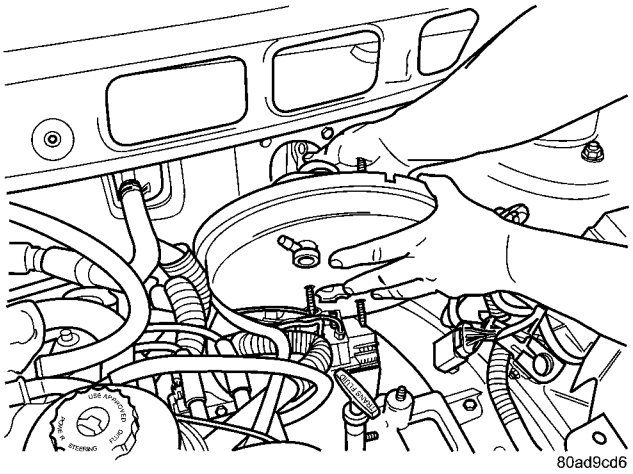

Fig. 70 Booster Removal/Installation

(1) With engine not running, pump the brake pedal until a firm pedal is achieved (4 or 5 strokes).

(2) Remove negative battery cable terminal from battery.

(3) Remove positive battery cable terminal from battery.

(4) Remove battery thermal guard shield.

(5) Remove battery clamp, nut and battery from the battery tray.

(6) If the vehicle is equipped with speed control, disconnect the vacuum hose at the vacuum tank built into the battery tray.

(7) Remove the two nuts and one bolt securing battery tray in place. Remove battery tray.

(8) If vehicle is equipped with speed control:

(a) Disconnect wiring harness connector from the speed control servo.

(b) Remove the two servo mounting nuts.

POWER BRAKE BOOSTER (Continued)

(c) Lay speed control servo off to the side, out of the way.

(9) If the vehicle is equipped with the 2.5L diesel engine, remove the coolant recovery pressure container and bracket. (Refer to 7 - COOLING/ENGINE/ COOLANT RECOVERY PRESS CONTAINER - REMOVAL)

(10) Disconnect wiring harness connector from brake fluid level switch in master cylinder fluid reservoir (Fig. 71).

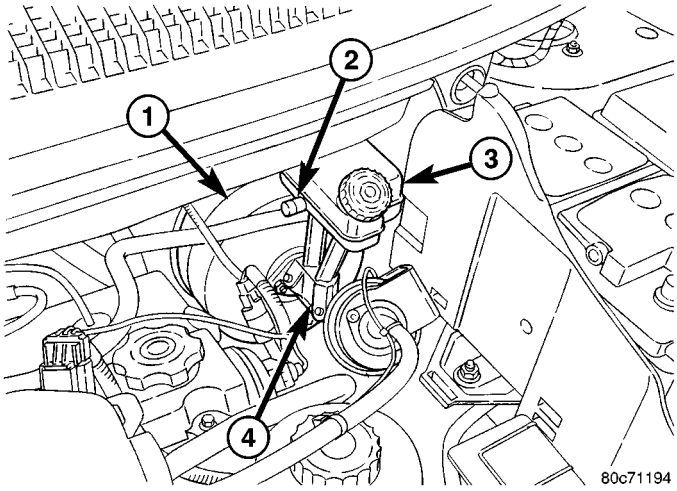

Fig. 71 RHD Master Cylinder And Power Brake Booster

1 - POWER BRAKE BOOSTER
2 - BRAKE FLUID LEVEL SWITCH
3 - FLUID RESERVOIR
4 - MASTER CYLINDER

CAUTION: Before removing the master cylinder from the power brake vacuum booster, the master cylinder and vacuum booster must be thoroughly cleaned. This must be done to prevent dirt particles from falling into the power brake vacuum booster.

(11) Clean area where master cylinder assembly attaches to power brake booster. Use only a solvent such as Mopar® Brake Parts Cleaner or equivalent.

NOTE: It is not necessary to remove the brake tubes from the master cylinder when removing the master cylinder from the booster.

(12) Remove two nuts attaching master cylinder to power brake booster (Fig. 72).

(13) Slide master cylinder straight out of power brake booster. Lay master cylinder with primary and secondary tubes to the side, out of the way.

CAUTION: A seal on the rear of the master cylinder is used to create the seal for holding vacuum in the power brake vacuum booster. The vacuum seal on the master cylinder MUST be replaced whenever the master cylinder is removed from the power brake vacuum booster.

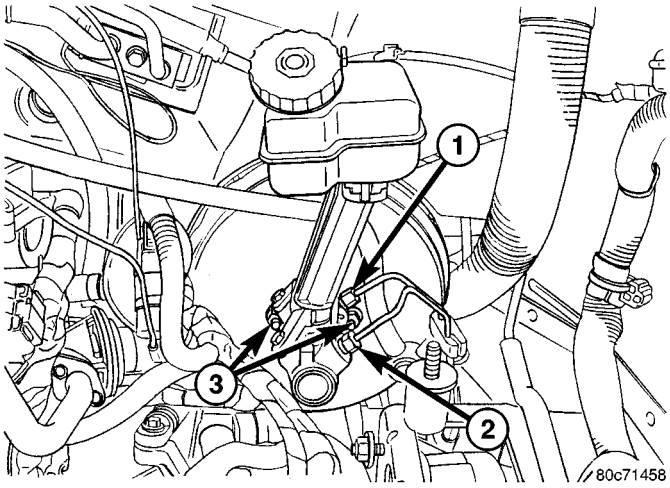

Fig. 72 RHD Master Cylinder Mounting

1 - PRIMARY BRAKE TUBE NUT
2 - SECONDARY BRAKE TUBE NUT
3 - MASTER CYLINDER MOUNTING NUTS

(14) Disconnect vacuum hose from check valve located on booster. **DO NOT REMOVE CHECK VALVE FROM POWER BRAKE BOOSTER.**

(15) Under the instrument panel, remove booster input rod trim cover.

(16) Locate the booster input rod to brake pedal torque shaft connection under the instrument panel. Position a small screwdriver between the center tang on the retaining clip (Fig. 73).

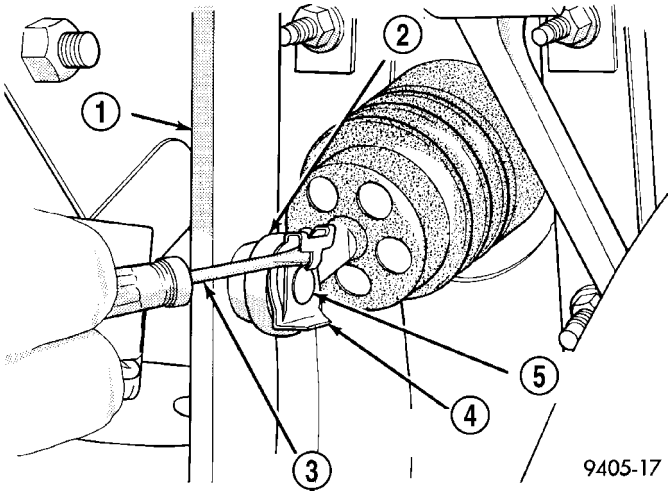

Fig. 73 Booster Input Rod Pin Retaining Clip (Typical)

1 - BRAKE PEDAL
2 - INPUT ROD
3 - SCREWDRIVER
4 - RETAINING CLIP
5 - BRAKE PEDAL PIN

POWER BRAKE BOOSTER (Continued)

(17) Rotate screwdriver enough to allow retaining clip center tang to pass over end of brake pedal pin. Then pull retaining clip off brake pedal torque shaft pin. **Discard retaining clip. It is not to be reused. Replace only with a new retaining clip when assembling.**

(18) Remove booster input rod from pedal torque shaft pin.

(19) Remove the three easily accessed mounting nuts attaching power brake booster to dash panel and loosen fourth (Fig. 74). As fourth nut is loosened, push the booster forward periodically until the nut can be completely removed.

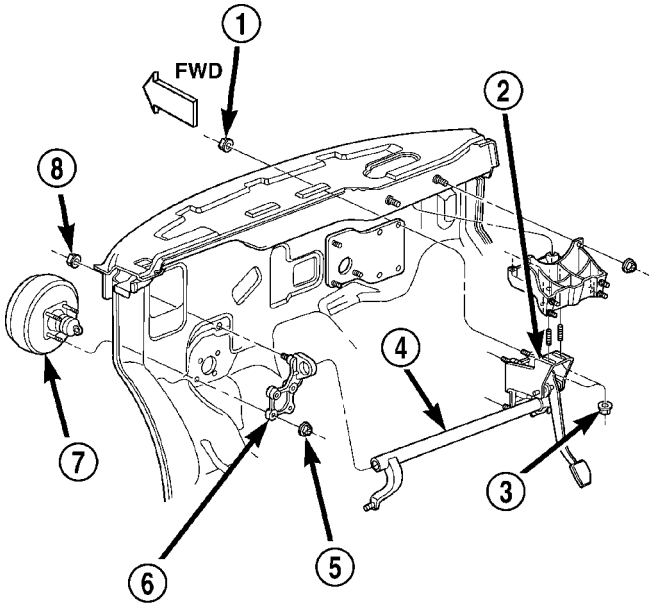

Fig. 74 Booster, Torque Shaft And Pedal Mounting

1 - PEDAL MOUNTING NUT
2 - BRAKE PEDAL ASSEMBLY
3 - PEDAL MOUNTING NUT
4 - PEDAL TORQUE SHAFT
5 - BOOSTER MOUNTING NUT
6 - BOOSTER BRACKET
7 - POWER BRAKE BOOSTER
8 - BOOSTER BRACKET MOUNTING NUT

(20) Slide power brake booster forward and remove through engine compartment (Fig. 75).

CAUTION: Do not attempt to disassemble the power brake vacuum booster. It is serviced ONLY as a complete assembly.

INSTALLATION

INSTALLATION - LHD

(1) Position power brake booster on dash panel using the reverse procedure of its removal (Fig. 70).

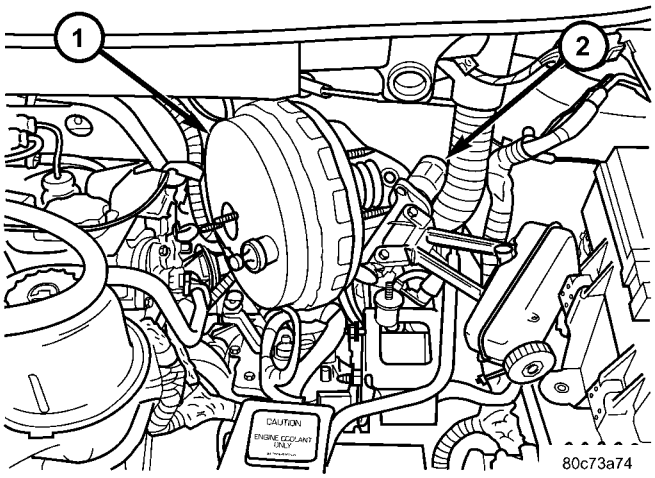

Fig. 75 RHD Booster Removal/Installation

1 - POWER BRAKE BOOSTER
2 - MASTER CYLINDER

It may be necessary to push in on booster input rod as it is guided through the dash panel.

(2) Install the four nuts mounting the booster to the dash panel (Fig. 69). Tighten the mounting nuts to a torque of 29 N·m (250 in. lbs.).

(3) Using lubriplate, or equivalent, coat the surface of the brake pedal pin where it contacts the booster input rod.

CAUTION: When installing the brake pedal pin on the power brake booster input rod, do not re-use the old retaining clip.

(4) Install booster input rod on brake pedal pin and install a NEW retaining clip (Fig. 76).

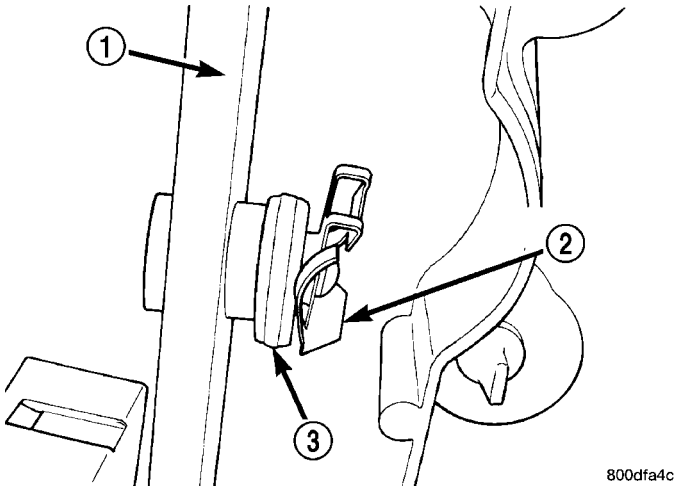

Fig. 76 Retaining Pin Installed On Brake Pedal Pin

1 - BRAKE PEDAL
2 - RETAINING CLIP
3 - BOOSTER INPUT ROD

POWER BRAKE BOOSTER (Continued)

CAUTION: Do not reuse the original brake lamp switch. The switch can only be adjusted once. That is during initial installation of the switch. If the switch is not adjusted properly or has been removed for some service, a new switch must be installed and adjusted.

(5) Remove and replace the brake lamp switch with a NEW switch. (Refer to 8 - ELECTRICAL/ LAMPS/LIGHTING - EXTERIOR/BRAKE LAMP SWITCH - REMOVAL), (Refer to 8 - ELECTRICAL/ LAMPS/LIGHTING - EXTERIOR/BRAKE LAMP SWITCH - INSTALLATION)

(6) Install the silencer panel below the steering column.

(7) Connect vacuum hose to check valve on power brake booster.

CAUTION: The master cylinder (and its rear seal) is used to create the seal for holding vacuum in the vacuum booster. The vacuum seal on the master cylinder MUST be replaced with a NEW seal whenever the master cylinder is removed from the vacuum booster.

CAUTION: When removing the vacuum seal from the master cylinder do not use a sharp tool.

(8) Using a soft tool such as a trim stick, remove the vacuum seal from the master cylinder mounting flange.

(9) Install a NEW vacuum seal on rear mounting flange of the master cylinder (Fig. 77).

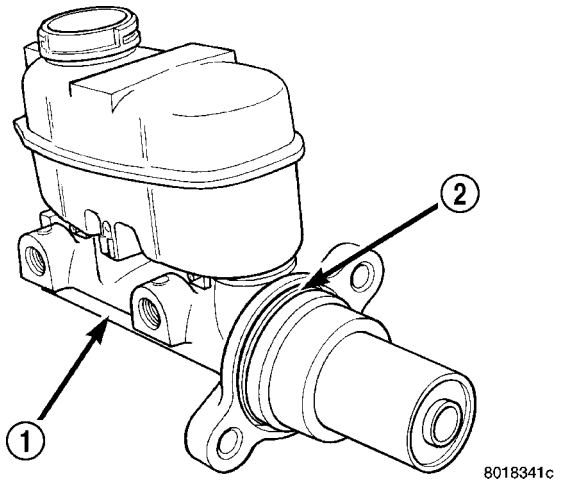

Fig. 77 Vacuum Seal (Typical)

1 - MASTER CYLINDER ASSEMBLY
2 - VACUUM SEAL

(10) Position master cylinder on studs of booster, aligning push rod on booster with master cylinder piston.

(11) Install the two nuts mounting the master cylinder to the booster (Fig. 67). Tighten both mounting nuts to a torque of 25 N·m (225 in. lbs.).

(12) Connect wiring harness connector to brake fluid level switch in the master cylinder fluid reservoir (Fig. 66).

(13) Connect primary and secondary brake tubes to ABS ICU or non-ABS junction block (Fig. 67). Tighten the tube nuts to 17 N·m (145 in lbs.).

(14) Install wiper module (unit). (Refer to 8 - ELECTRICAL/WIPERS/WASHERS/WIPER MODULE - INSTALLATION)

(15) If equipped with speed control, install speed control servo and connect wiring connector. Tighten the mounting nuts to a torque of 14 N·m (124 in. lbs.).

(16) Install the battery tray. Install the two nuts and one bolt attaching the battery tray to the vehicle. Tighten the bolt and nuts to a torque of 14 N·m (124 in. lbs.).

(17) If vehicle is equipped with speed control, connect the servo vacuum hose to the vacuum tank on the battery tray.

(18) Install the air inlet resonator and hoses as an assembly on the throttle body and air cleaner housing. Securely tighten hose clamp at air cleaner housing and throttle body.

(19) Secure the engine coolant filler neck to the battery tray with its mounting screw.

(20) Install the battery, clamp and mounting nut.

(21) Install the positive battery cable on the battery.

(22) Install the negative battery cable on the battery.

(23) Install the battery thermal guard shield.

(24) Bleed the base brakes as necessary. (Refer to 5 - BRAKES - STANDARD PROCEDURE)

(25) Road test vehicle to ensure operation of the brakes.

INSTALLATION - RHD

(1) Position power brake booster on dash panel using the reverse procedure of its removal (Fig. 75).

(2) Below instrument panel, first install the two upper nuts mounting the booster to the dash panel, drawing it into place, then install the two lower mounting nuts. Tighten the mounting nuts to a torque of 29 N·m (250 in. lbs.).

(3) Using lubriplate, or equivalent, coat the surface of the brake pedal torque shaft pin where it contacts the booster input rod.

CAUTION: When installing the brake pedal torque shaft pin on the power brake booster input rod, do not re-use the old retaining clip.

POWER BRAKE BOOSTER (Continued)

(4) Install booster input rod on brake pedal torque shaft pin and install a NEW retaining clip (Fig. 78).

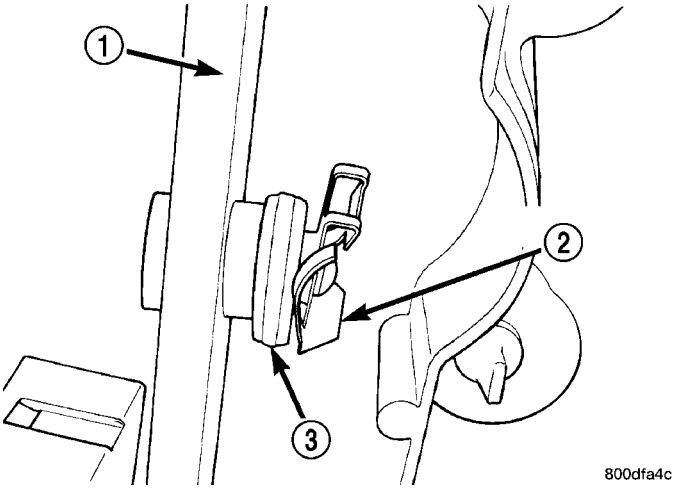

Fig. 78 Retaining Pin Installed On Brake Pedal Pin (Typical)

1 - BRAKE PEDAL
2 - RETAINING CLIP
3 - BOOSTER INPUT ROD

(5) Install booster input rod trim cover.

(6) Connect vacuum hose to check valve on power brake booster.

CAUTION: The master cylinder (and its rear seal) is used to create the seal for holding vacuum in the vacuum booster. The vacuum seal on the master cylinder MUST be replaced with a NEW seal whenever the master cylinder is removed from the vacuum booster.

CAUTION: When removing the vacuum seal from the master cylinder, do not use a sharp tool.

(7) Using a soft tool such as a trim stick, remove the vacuum seal from the master cylinder mounting flange.

(8) Install a NEW vacuum seal on rear mounting flange of the master cylinder (Fig. 79).

(9) Position master cylinder on studs of booster, aligning push rod on booster with master cylinder piston.

(10) Install the two nuts mounting the master cylinder to the booster (Fig. 72). Tighten both mounting nuts to a torque of 25 N·m (225 in. lbs.).

(11) Connect wiring harness connector to brake fluid level switch in the master cylinder fluid reservoir (Fig. 71).

(12) If the vehicle is equipped with the 2.5L diesel engine, install the coolant recovery pressure container and bracket. (Refer to 7 - COOLING/ENGINE/

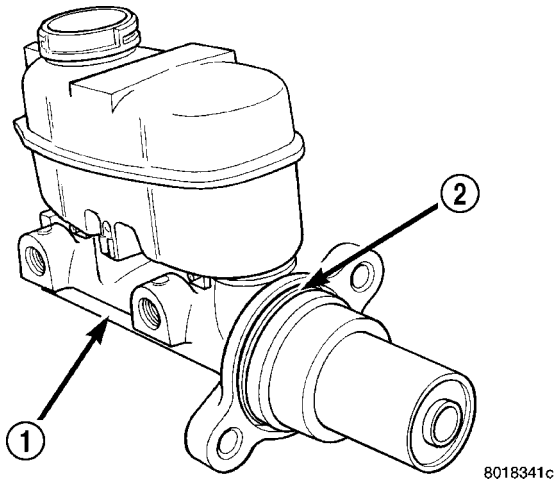

Fig. 79 Vacuum Seal (Typical)

1 - MASTER CYLINDER ASSEMBLY
2 - VACUUM SEAL

COOLANT RECOVERY PRESS CONTAINER - INSTALLATION)

(13) If equipped with speed control, install speed control servo and connect wiring connector. Tighten the mounting nuts to a torque of 14 N·m (124 in. lbs.).

(14) Install the battery tray. Install the two nuts and one bolt attaching the battery tray to the vehicle. Tighten the bolt and nuts to a torque of 14 N·m (124 in. lbs.).

(15) If vehicle is equipped with speed control, connect the servo vacuum hose to the vacuum tank on the battery tray.

(16) Install the battery, clamp and mounting nut.

(17) Install the positive battery cable on the battery.

(18) Install the negative battery cable on the battery.

(19) Install the battery thermal guard shield.

CAUTION: Do not reuse the original brake lamp switch. The switch can only be adjusted once. That is during initial installation of the switch. If the switch is not adjusted properly or has been removed for some service, a new switch must be installed and adjusted.

(20) Remove and replace the brake lamp switch with a NEW switch. (Refer to 8 - ELECTRICAL/ LAMPS/LIGHTING - EXTERIOR/BRAKE LAMP SWITCH - REMOVAL), (Refer to 8 - ELECTRICAL/ LAMPS/LIGHTING - EXTERIOR/BRAKE LAMP SWITCH - INSTALLATION)

(21) Bleed the base brakes as necessary. (Refer to 5 - BRAKES - STANDARD PROCEDURE)

(22) Road test vehicle to ensure proper operation of the brakes.

PROPORTIONING VALVE

DESCRIPTION - PROPORTIONING VALVE (HEIGHT SENSING)

NOTE: Only vehicles without antilock brakes (ABS) have a proportioning valve. Vehicles with ABS utilize electronic brake distribution which is controlled through the ABS integrated control unit.

Vehicles not equipped with ABS use a height sensing proportioning valve. It is mounted to the body of the vehicle above the rear axle (Fig. 80). It has an actuator lever that attaches to the rear axle and moves with the axle to help the valve sense the vehicle height.

CAUTION: The height sensing proportioning valve is not adjustable. No attempt should be made to adjust it. It is replaced as a complete assembly.

CAUTION: The use of after-market load leveling or load capacity increasing devices on this vehicle are prohibited. Using air shock absorbers or helper springs on this vehicle will cause the height sensing proportioning valve to inappropriately reduce the hydraulic pressure to the rear brakes. This inappropriate reduction in hydraulic pressure potentially could result in increased stopping distance of the vehicle.

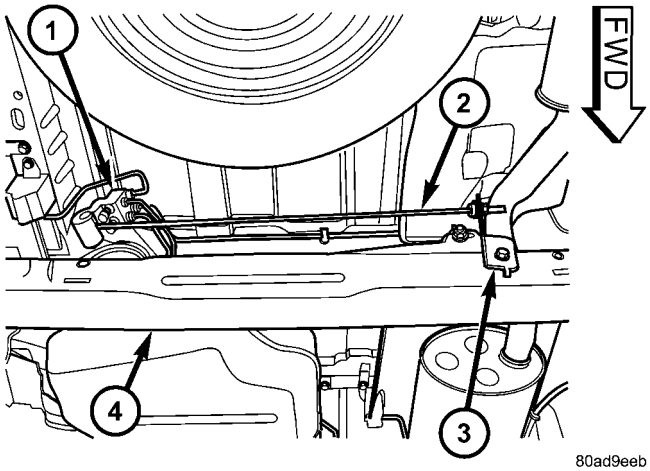

Fig. 80 HEIGHT SENSING PROPORTIONING VALVE

1 - PROPORTIONING VALVE
2 - ACTUATOR LEVER
3 - AXLE BRACKET
4 - REAR AXLE

OPERATION - PROPORTIONING VALVE (HEIGHT SENSING)

Vehicles not equipped with ABS use a height sensing proportioning valve.

The height sensing proportioning valve operates similarly to a standard proportioning valve in the following way. As hydraulic pressure is applied to the valve, full input hydraulic pressure is supplied to the rear brakes up to a certain pressure point, called the split point. Beyond the split point, the proportioning valve reduces the amount of hydraulic pressure to the rear brakes according to a given ratio. Thus, on light brake applications, approximately equal hydraulic pressure will be transmitted to both the front and rear brakes. Upon heavier brake applications, the hydraulic pressure transmitted to the rear brakes will be lower than the front brakes. This will prevent premature rear wheel lockup and skid.

Here is how the height sensing proportioning valve differs from a standard proportioning valve. As the height of the rear suspension changes, the height sensing portion of the proportioning valve changes the split point of the proportioning valve. When the height of the rear suspension is low, the proportioning valve interprets this as extra load and the split point of the proportioning valve is raised to a higher pressure to allow for more rear braking. When the height of the rear suspension is high, the proportioning valve interprets this as a light load and the split point of the proportioning valve is lowered to a lower pressure and rear braking is reduced.

The height sensing proportioning valve regulates the pressure by sensing the load condition of the vehicle through the movement of the proportioning valve actuator lever (Fig. 80). As the position of the rear axle changes, depending on the load the vehicle is carrying, the movement is transferred to the proportioning valve. The proportioning valve adjusts the hydraulic pressure accordingly.

The height sensing proportioning valve allows the brake system to maintain the optimal front to rear brake balance regardless of the vehicle load condition. Under a light load condition, hydraulic pressure to the rear brakes is minimized. As the rear load condition increases, so does the hydraulic pressure to the rear brakes.

DIAGNOSIS AND TESTING - PROPORTIONING VALVE (HEIGHT SENSING)

CAUTION: The use of aftermarket load leveling or load capacity increasing devices on this vehicle is prohibited. Using air shock absorbers or helper springs on this vehicle will cause the height sensing proportioning valve to inappropriately reduce the hydraulic pressure to the rear brakes. This inappropriate reduction in hydraulic pressure potentially could result in increased stopping distance of the vehicle.

When a premature rear wheel skid is obtained on a brake application, it may be an indication that the hydraulic pressure to the rear brakes is above the specified output from the proportioning valve. This condition indicates a possible malfunction of the height sensing proportioning valve, which will require testing to verify that it is properly controlling the hydraulic pressure allowed to the rear brakes. Premature rear wheel skid may also be caused by contaminated front or rear brake linings.

Prior to testing a proportioning valve for function, check that all tire pressures are correct. Also, ensure the front and rear brake linings are in satisfactory condition. **It is also necessary to verify that the brakes shoe assemblies on a vehicle being tested are either original equipment manufacturers (OEM) or original replacement brake shoe assemblies meeting the OEM lining material specification. This vehicles brake system is not balanced for aftermarket brake shoe assembly lining material.**

If both front and rear brakes check OK, proceed with the following test procedure for the height sensing proportioning valve.

(1) Road test the vehicle to determine which rear wheel brake is exhibiting premature wheel skid.

(2) Raise vehicle. (Refer to LUBRICATION & MAINTENANCE/HOISTING - STANDARD PROCEDURE)

(3) Remove the chassis brake tube going to the rear brake in question at the proportioning valve. Remove the chassis brake tube coming from the junction block at the proportioning valve (Fig. 81).

(4) Install the appropriate fittings from Pressure Test Fittings, Special Tool 6833, into the open ports of the proportioning valve.

(5) Install the previously removed brake lines into the Pressure Test Fittings. Tighten all tube nuts to 17 N·m (145 in. lbs.).

(6) Install a pressure gauge from Gauge Set, Special Tool C-4007-A into the open port on each pressure test fitting. Bleed air out of hose from pressure test fittings to pressure gauges at the pressure gauges. Then bleed air out of the brake line being tested at that rear wheel brake bleeder.

NOTE: Actuator rod is a linear spring and is meant to flex by design. When rod is raised, it will have some curvature to it.

(7) Remove the screw fastening the proportioning valve actuator rod bracket to the rear axle. Raise the actuator lever to the full-upward position and hold it there.

(8) With the aid of a helper, apply pressure to the brake pedal until a pressure of 6895 kPa (1000 psi) is obtained on the proportioning valve inlet gauge. Then, based on the type of brake system the vehicle is equipped with and the pressure specification shown on the following table, compare the pressure reading on the outlet gauge to the specification. If outlet pressure at the proportioning valve is not within specification when required inlet pressure is obtained, replace the proportioning valve. (Refer to 5 - BRAKES/HYDRAULIC/MECHANICAL/PROPORTIONING VALVE - REMOVAL)

CAUTION: Do not attempt to adjust the height sensing proportioning valve. If found to be defective, replace the valve.

(9) Remove the pressure test fittings and pressure gauges from the proportioning valve.

(10) Install the chassis brake lines in the correct ports of the proportioning valve. Tighten all tube nuts to 17 N·m (145 in. lbs.).

(11) If necessary, repeat the above steps on the remaining side of the proportioning valve which control the other rear wheel brake.

(12) Attach the actuator lever and bracket to the rear axle.

(13) Bleed rear brakes. (Refer to 5 - BRAKES - STANDARD PROCEDURE)

(14) Road test vehicle.

PROPORTIONING VALVE (Continued)

PROPORTIONING VALVE SPECIFICATIONS

WHEEL BASE	DRIVE TRAIN	SALES CODE	BRAKE SYSTEM	SPLIT POINT	SLOPE	INLET PRESSURE PSI	OUTLET PRESSURE PSI
SWB	FWD	BRB-BGF	15″ DISC/ DRUM W/O ANTILOCK	VAR.	0.59	1000 PSI	675-875 PSI

REMOVAL - PROPORTIONING VALVE (HEIGHT SENSING)

(1) Using a brake pedal depressor, move and lock the brake pedal to a position past its first 1 inch of travel. This will prevent brake fluid from draining out of the master cylinder when the brake tubes are removed from the proportioning valve.

(2) Raise vehicle. (Refer to LUBRICATION & MAINTENANCE/HOISTING - STANDARD PROCEDURE).

CAUTION: Before removing the brake tubes from the proportioning valve, the proportioning valve and the brake tubes must be thoroughly cleaned. This is required to prevent contamination from entering the proportioning valve or the brake tubes.

(3) Remove the four brake tubes from the inlet and outlet ports of the proportioning valve (Fig. 81).

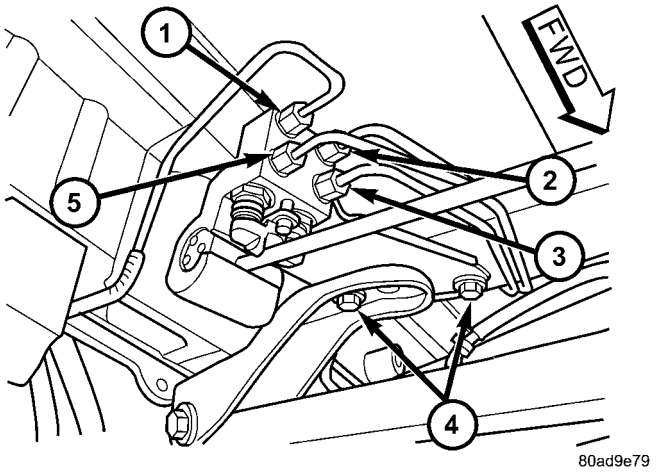

Fig. 81 PROPORTIONING VALVE MOUNTING

1 - LEFT REAR OUTLET TUBE
2 - RIGHT REAR OUTLET TUBE
3 - RIGHT REAR INLET TUBE
4 - MOUNTING BOLTS
5 - LEFT REAR INLET TUBE

(4) Remove the two bolts attaching the proportioning valve and bracket to the vehicle (Fig. 81).

(5) Slide the bracket out from under rear track bar bracket. Lower the valve down enough to pull its actuator rod out of the axle bracket and remove the proportioning valve from the vehicle.

INSTALLATION - PROPORTIONING VALVE (HEIGHT SENSING)

(1) Install the end of the actuator rod through the axle bracket grommet and slide the proportioning valve bracket under the rear track bar body bracket (Fig. 81).

(2) Install the proportioning valve attaching bolts (Fig. 81). Tighten the attaching bolts to a torque of 54 N·m (40 ft. lbs.).

(3) Install the four chassis brake lines into the inlet and outlet ports of the proportioning valve (Fig. 81). Tighten all tube nuts to a torque of 17 N·m (145 in. lbs.).

CAUTION: The height sensing proportioning valve is not adjustable. No attempt should be made to adjust it.

(4) Bleed the brake system thoroughly to ensure that all air has been expelled from the hydraulic system. (Refer to 5 - BRAKES - BASE - STANDARD PROCEDURE).

(5) Lower the vehicle to the ground.

(6) Road test the vehicle to verify proper operation of the brake system.

ROTOR

DIAGNOSIS AND TESTING - BRAKE ROTOR

Any servicing of the rotor requires extreme care to maintain the rotor within service tolerances to ensure proper brake action.

Excessive runout or wobble in a rotor can increase pedal travel due to piston knock-back. This increases guide pin sleeve wear due to the tendency of the caliper to follow the rotor wobble.

When diagnosing a brake noise or pulsation, the machined disc braking surface should be checked and inspected.

ROTOR (Continued)

BRAKING SURFACE INSPECTION

Light braking surface scoring and wear is acceptable. If heavy scoring or warping is evident, the rotor must be refaced or replaced. (Refer to 5 - BRAKES/HYDRAULIC/MECHANICAL/ROTORS - STANDARD PROCEDURE).

Excessive wear and scoring of the rotor can cause improper lining contact on the rotor's braking surface. If the ridges on the rotor are not removed before new brake shoes are installed, improper wear of the shoes will result.

If a vehicle has not been driven for a period of time, the rotor's braking surface will rust in the areas not covered by the brake shoes at that time. Once the vehicle is driven, noise and chatter from the disc brakes can result when the brakes are applied.

Some discoloration or wear of the rotor surface is normal and does not require resurfacing when linings are replaced. If cracks or burned spots are evident, the rotor must be replaced.

ROTOR MINIMUM THICKNESS

Measure rotor thickness at the center of the brake shoe contact surface. Replace the rotor if it is worn below minimum thickness or if machining the rotor will cause its thickness to fall below specifications.

CAUTION: Do not machine the rotor if it will cause the rotor to fall below minimum thickness.

Minimum thickness specifications are cast on the rotor's unmachined surface (Fig. 82). Limits can also be found in this section's specification table. (Refer to 5 - BRAKES/HYDRAULIC/MECHANICAL/ROTOR - SPECIFICATIONS)

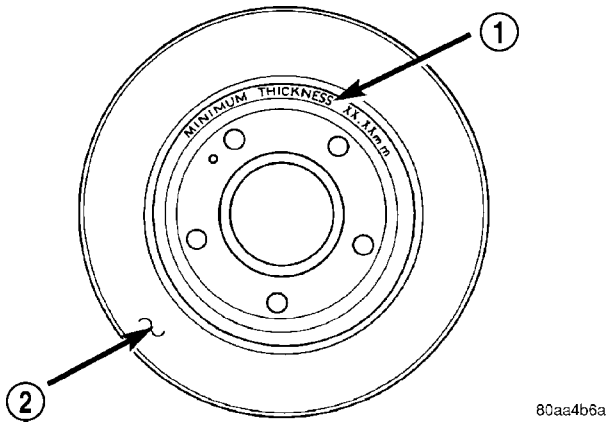

Fig. 82 Minimum Brake Rotor Thickness Markings (Typical)

1 - ROTOR MINIMUM THICKNESS MARKING
2 - ROTOR

ROTOR THICKNESS VARIATION

Thickness variation in a rotor's braking surface can result in pedal pulsation, chatter and surge. This can be caused by excessive runout in the rotor or the hub.

Rotor thickness variation measurements should be made in conjunction with measuring runout. Measure thickness of the brake rotor at 12 equal points around the rotor braking surface with a micrometer at a radius approximately 25 mm (1 inch) from edge of rotor (Fig. 83). If thickness measurements vary beyond the specification listed in the specifaction table (Refer to 5 - BRAKES/HYDRAULIC/MECHANICAL/ROTOR - SPECIFICATIONS), the rotor should be refaced or replaced. (Refer to 5 - BRAKES/HYDRAULIC/MECHANICAL/ROTORS - STANDARD PROCEDURE).

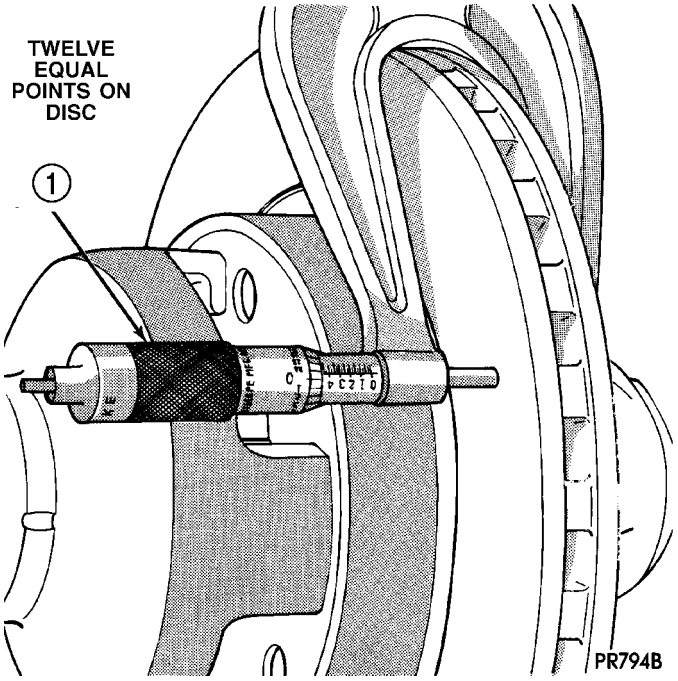

Fig. 83 Checking Rotor For Thickness

1 - CALIPER

ROTOR (Continued)

ROTOR RUNOUT

On-vehicle rotor runout is the combination of the individual runout of the hub face and the runout of the rotor. (The hub and rotor runouts are separable). To measure rotor runout on the vehicle, first remove the tire and wheel assembly. Reinstall the wheel mounting nuts on the studs, tightening the rotor to the hub. Mount the Dial Indicator, Special Tool C-3339, with Mounting Adaptor, Special Tool SP-1910 on steering arm. The dial indicator plunger should contact braking surface of rotor approximately ten millimeters from edge of rotor (Fig. 84). Check lateral runout on both sides of the rotor, marking the low and high spots on both. Runout limits can be found in the specification table in this section. (Refer to 5 - BRAKES/HYDRAULIC/MECHANICAL/ROTOR - SPECIFICATIONS)

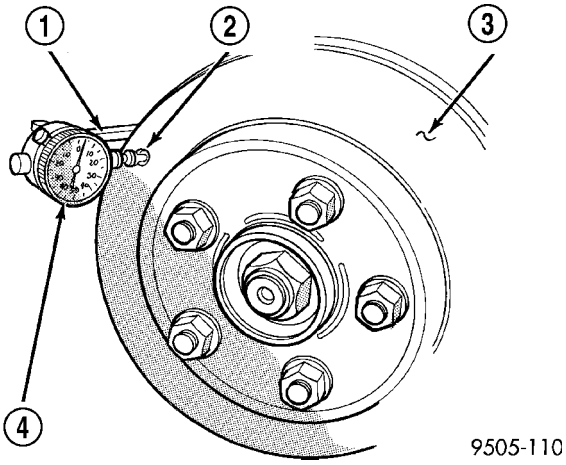

Fig. 84 Checking Rotor Runout

1 - SPECIAL TOOL SP-1910
2 - 10 MILLIMETERS FROM EDGE
3 - DISC SURFACE
4 - SPECIAL TOOL C-3339

If runout is in excess of the specification, check the lateral runout of the hub face. Before removing the rotor from the hub, place a chalk mark across both the rotor and the one wheel stud closest to where the high runout measurement was taken. This way, the original mounting spot of the rotor on the hub is indexed (Fig. 85).

Remove the rotor from the hub.

NOTE: Clean the hub face surface before checking runout. This provides a clean surface to get an accurate indicator reading.

Mount Dial Indicator, Special Tool C-3339, and Mounting Adaptor, Special Tool SP-1910, to the steering knuckle. Position the indicator stem so it contacts the hub face near the outer diameter. Care must be taken to position stem outside of the stud circle, but inside of the chamfer on the hub rim (Fig. 86).

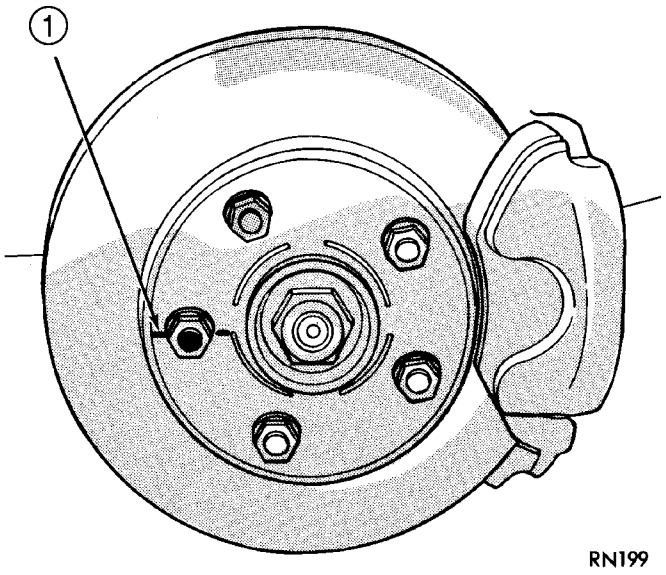

Fig. 85 Marking Rotor and Wheel Stud

1 - CHALK MARK

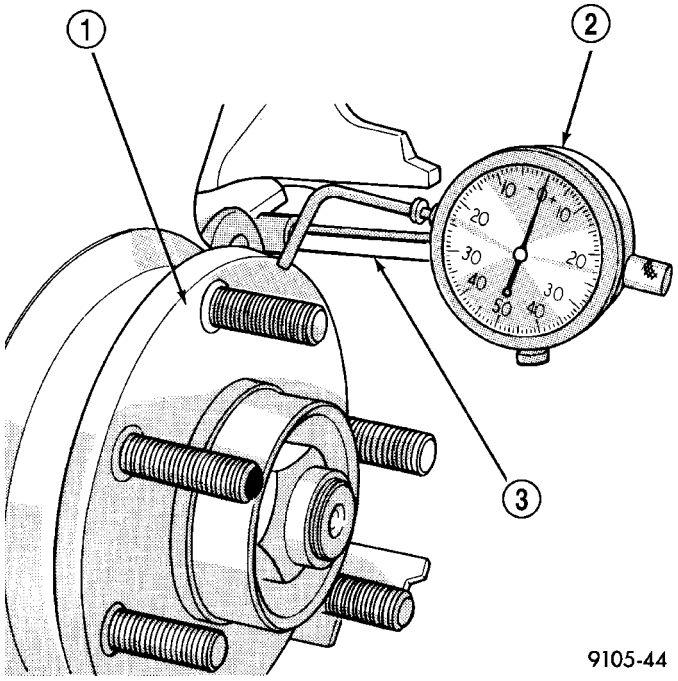

Fig. 86 Checking Hub Runout

1 - HUB SURFACE
2 - SPECIAL TOOL C-3339
3 - SPECIAL TOOL SP-1910

Hub runout should not exceed 0.03 mm (0.0012 inch). If runout exceeds this specification, the hub must be replaced. (Refer to 2 - SUSPENSION/FRONT/HUB / BEARING - REMOVAL)(Refer to 2 - SUSPENSION/REAR/HUB / BEARING - REMOVAL)

ROTOR (Continued)

If the hub runout does not exceed this specification, install the rotor back on the hub, aligning the chalk marks on the rotor with a wheel mounting stud, two studs apart from the original stud (Fig. 87). Tighten nuts in the proper sequence and torque to specifications.

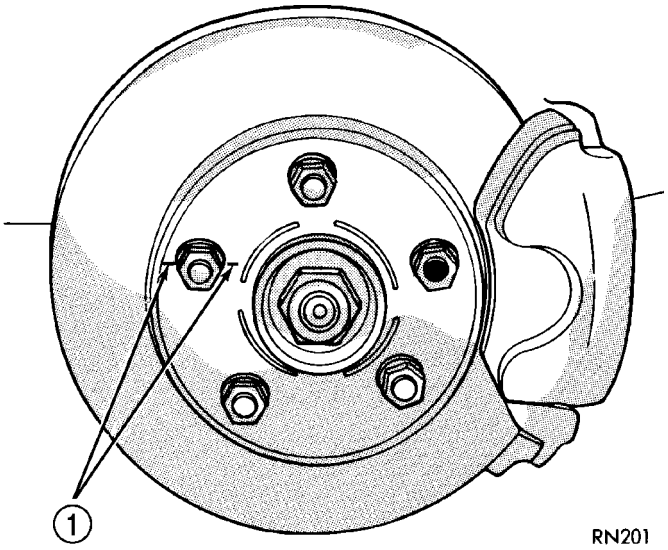

Fig. 87 Index Rotor And Wheel Stud

1 - CHALK MARK

Recheck brake rotor runout to see if the runout is now within specifications. (Refer to 5 - BRAKES/HYDRAULIC/MECHANICAL/ROTOR - SPECIFICATIONS)

If runout is not within specifications, reface or replace the brake rotor. (Refer to 5 - BRAKES/HYDRAULIC/MECHANICAL/ROTORS - STANDARD PROCEDURE)

STANDARD PROCEDURE - BRAKE ROTOR MACHINING

NOTE: Refacing the rotor is not required each time the brake pads are replaced, only when the need is foreseen.

Any servicing of the rotor requires extreme care to maintain the rotor within service tolerances to ensure proper brake action.

If the rotor surface is deeply scored or warped, or there is a complaint of brake roughness or brake pedal pulsation, the rotor should be refaced using a hub-mounted on-car brake lathe (Fig. 88), or replaced.

The use of a hub-mounted on-car brake lathe is highly recommended to eliminate the possibility of excessive runout. It trues the brake rotor to the vehicle's hub and bearing.

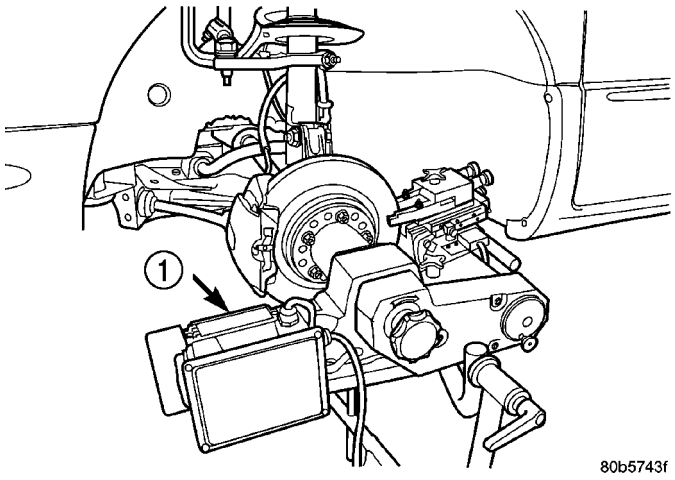

Fig. 88 On-Car Brake Lathe

1 - ON-CAR BRAKE LATHE

NOTE: All rotors have markings for minimum allowable thickness cast on an un-machined surface of the rotor (Fig. 89) (Fig. 90). Minimum thickness specifications can also be found in the specification table in this section. (Refer to 5 - BRAKES/HYDRAULIC/MECHANICAL/ROTOR - SPECIFICATIONS)

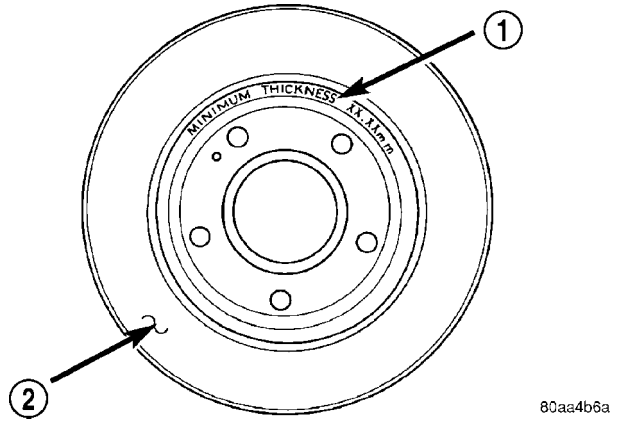

Fig. 89 Front Brake Rotor

1 - ROTOR MINIMUM THICKNESS MARKING
2 - ROTOR

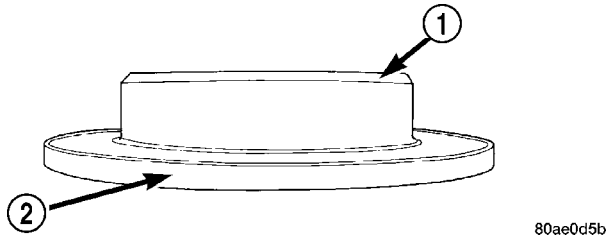

Fig. 90 Rear Brake Rotor Minimum Thickness Markings

1 - ROTOR MINIMUM THICKNESS AND DRUM MAXIMUM DIAMETER SPECIFICATIONS ARE SHOWN ON THIS SURFACE
2 - REAR ROTOR

ROTOR (Continued)

Minimum allowable thickness is the minimum thickness which the brake rotor machined surface may be cut to.

CAUTION: Do not machine the rotor if it will cause the rotor to fall below minimum thickness.

Before installation, verify the brake rotor face and the hub adapters are free of any chips, rust, or contamination.

When mounting and using the brake lathe, strict attention to the brake lathe manufacturer's operating instructions is required.

Machine both sides of the brake rotor at the same time. Cutting both sides at the same time minimizes the possibility of a tapered or uneven cut.

When refacing a rotor, the required TIR (Total Indicator Reading) and thickness variation limits MUST BE MAINTAINED. Extreme care in the operation of rotor turning equipment is required. Specifications for brake rotor machining can be found in this section's specification table. (Refer to 5 - BRAKES/HYDRAULIC/MECHANICAL/ROTOR - SPECIFICATIONS)

REMOVAL - FRONT BRAKE ROTOR

(1) Raise vehicle on jackstands or centered on a frame contact type hoist. See Hoisting in Lubrication and Maintenance.

(2) Remove the front wheel and tire assembly.

(3) Remove the two mounting bolts securing the disc brake caliper adapter with brake caliper to the steering knuckle (Fig. 91).

(4) Remove the disc brake caliper and adapter as an assembly from the steering knuckle (Fig. 91). Hang the assembly out of the way using wire or a bungee cord. Use care not to overextend the brake hose when doing this.

(5) Remove any retainer clips from the wheel mounting studs.

(6) Remove brake rotor from hub by pulling it straight off wheel mounting studs (Fig. 91).

INSTALLATION - FRONT BRAKE ROTOR

(1) Install the brake rotor back on the hub and bearing (Fig. 91).

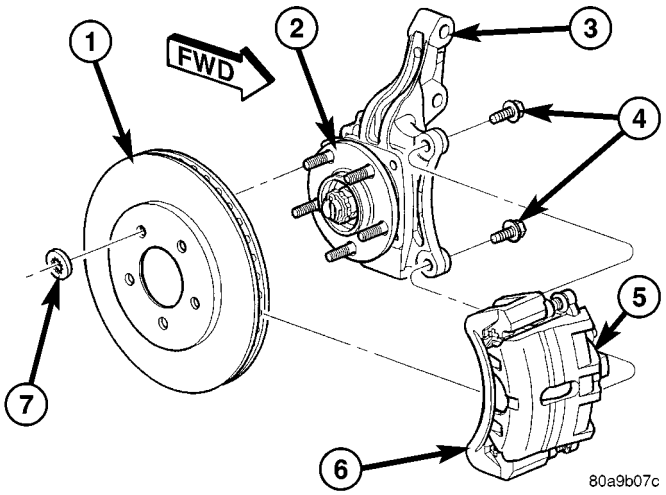

Fig. 91 Front Brake Mounting

1 - BRAKE ROTOR
2 - HUB AND BEARING
3 - STEERING KNUCKLE
4 - ADAPTER MOUNTING BOLTS
5 - BRAKE CALIPER
6 - ADAPTER
7 - CLIP

(2) Install brake caliper and adapter back over brake rotor aligning adapter with mounting holes on steering knuckle (Fig. 91).

(3) Install the two adapter mounting bolts securing the adapter to the steering knuckle. Tighten the mounting bolts to 169 N·m (125 ft. lbs.) torque.

(4) Install wheel and tire assembly on vehicle. Tighten the wheel mounting lug nuts in proper sequence until all nuts are torqued to half specification, then repeat the tightening sequence to the full specified torque of 135 N·m (100 ft. lbs.).

(5) Lower vehicle to the ground.

ROTOR (Continued)

SPECIFICATIONS

BRAKE ROTOR

When refacing a rotor, the required TIR (Total Indicator Reading) and thickness variation limits MUST BE MAINTAINED. Extreme care in the operation of rotor turning equipment is required.

LIMITS/SPECIFICATIONS

Braking Rotor	Rotor Thickness	Minimum Rotor Thickness	Rotor Thickness Variation	Rotor Runout*
Front - TRW	27.87–28.13 mm 1.097-1.107 in.	25.3 mm 0.996 in.	0.009 mm 0.0004 in.	0.075 mm 0.0030 in.
Front - Continental Teves	27.90–28.10 mm 1.098-1.106 in.	25.3 mm 0.996 in.	0.008 mm 0.0003 in.	0.100 mm 0.0039 in.
Rear	12.4–12.6 mm 0.488 -0.496 in.	11.25 mm 0.443 in.	0.013 mm 0.0005 in.	0.14 mm 0.0055 in.
* TIR Total Indicator Reading (Measured On Vehicle)				

BRAKE ROTOR - EXPORT

NOTE: Use the following information on all 4 wheel disc brake vehicles that are equipped with BR3 sales code.

When refacing a rotor, the required TIR (Total Indicator Reading) and thickness variation limits MUST BE MAINTAINED. Extreme care in the operation of rotor turning equipment is required.

LIMITS/SPECIFICATIONS

Brake Rotor	Rotor Thickness	Minimum Rotor Thickness	Rotor Thickness Variation	Rotor Runout*
Front	27.9-28.1 mm 1.098 -1.106 in.	26.5 mm 1.043 in	0.010 mm 0.0004 in.	0.080 mm 0.0031 in.
Rear	12.4-12.6 mm 0.488-0.496 in.	11.25 mm 0.443 in.	0.013 mm 0.0005 in.	0.14 mm 0.0055 in.
* TIR Total Indicator Reading (Measured On Vehicle)				

SUPPORT PLATE - DRUM BRAKE

REMOVAL

(1) Using a brake pedal depressor, move and secure brake pedal to a position past its first 1 inch of travel. This will prevent brake fluid from draining out of master cylinder when brake tube is remove from wheel cylinder.

(2) Raise vehicle. (Refer to LUBRICATION & MAINTENANCE/HOISTING - STANDARD PROCEDURE).

(3) Remove wheel and tire assembly.

(4) Disconnect brake tube from rear of wheel cylinder. Cap open ends

(5) Remove brake drum.

(6) Remove brake shoes from brake support plate. (Refer to 5 - BRAKES/HYDRAULIC/MECHANICAL/BRAKE PADS/SHOES - REMOVAL).

(7) Remove the 2 bolts attaching the wheel cylinder to the brake support plate.

(8) Remove the wheel cylinder from the brake support plate.

(9) Disconnect the park brake cable from the park brake actuation lever.

(10) Using a suitable tool such as a 14 mm box wrench (Fig. 92) or an aircraft type hose clamp, compress the flared legs on park brake cable retainer. Then pull the park brake cable out of brake support plate.

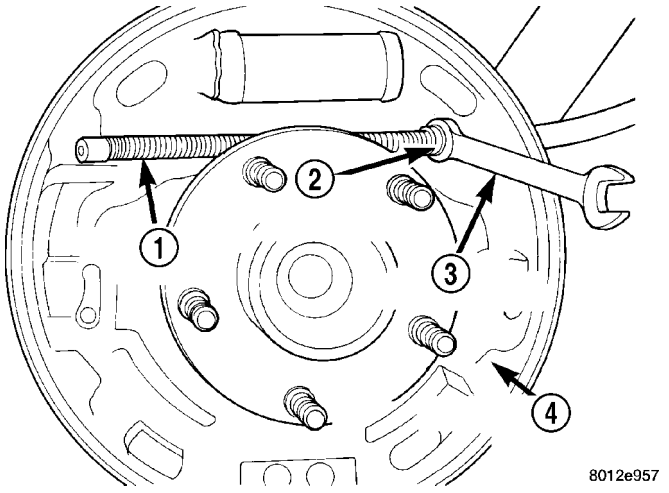

Fig. 92 Removing Park Brake Cable From Brake Support Plate

1 - PARK BRAKE CABLE
2 - CABLE RETAINER
3 - 14 mm BOX WRENCH
4 - BRAKE SUPPORT PLATE

(11) Remove the rear hub and bearing. (Refer to 2 - SUSPENSION/REAR/HUB / BEARING - REMOVAL)

(12) Remove the rear brake support plate from the rear axle.

INSTALLATION

(1) Install the 4 hub and bearing to axle mounting bolts into the mounting holes in the flange of the rear axle.

(2) Install the rear brake support plate on the 4 mounting bolts installed in the flange of the rear axle (Fig. 93).

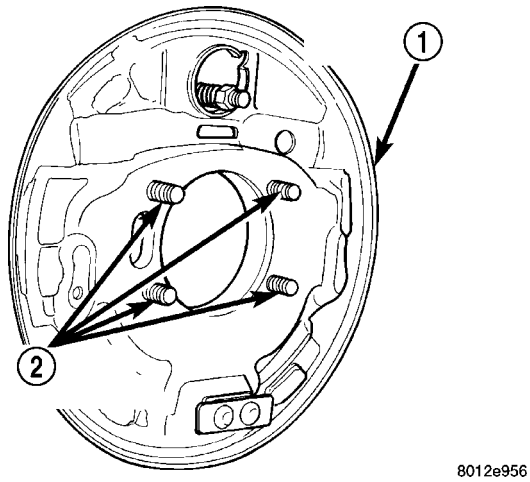

Fig. 93 Brake Support Plate Mounted On Bearing Attaching Bolts

1 - REAR BRAKE SUPPORT PLATE
2 - HUB/BEARING MOUNTING BOLTS

(3) Install the rear hub and bearing (and connect wheel speed sensor where applicable) stopping short of installing the brake drum. (Refer to 2 - SUSPENSION/REAR/HUB / BEARING - INSTALLATION)

(4) Install the rear park brake cable into its mounting hole in the rear brake support plate.

(5) Install the park brake cable on the park brake actuation lever.

(6) Apply sealant such as Mopar Gasket-In-A-Tube or equivalent around the wheel cylinder opening in the brake support plate.

(7) Install wheel cylinder onto brake support. Install and tighten the wheel cylinder to brake support plate attaching bolts to 8 N·m (75 in. lbs.) torque.

(8) Install brake tube into wheel cylinder. Tighten tube nut to a torque of 17 N·m (145 in. lbs.) torque.

(9) Install the rear brake shoes on the brake support plate. (Refer to 5 - BRAKES/HYDRAULIC/MECHANICAL/BRAKE PADS/SHOES - INSTALLATION).

(10) Install brake drum.

(11) Install the wheel and tire assembly. Tighten the wheel mounting nuts in proper sequence until all nuts are torqued to half specification, then repeat the

tightening sequence to the full specified torque of 135 N·m (100 ft. lbs.).

(12) Adjust drum brake shoes. (Refer to 5 - BRAKES/HYDRAULIC/MECHANICAL/BRAKE PADS/SHOES - ADJUSTMENTS)

(13) Remove brake pedal depressor tool.

(14) Bleed the brake system as necessary. (Refer to 5 - BRAKES - BASE - STANDARD PROCEDURE).

(15) Lower the vehicle.

WHEEL CYLINDERS

REMOVAL

(1) Using a brake pedal depressor, move and secure brake pedal to a position past its first 1 inch of travel. This will prevent brake fluid from draining out of master cylinder when brake tube is remove from wheel cylinder.

(2) Raise vehicle. (Refer to LUBRICATION & MAINTENANCE/HOISTING - STANDARD PROCEDURE).

(3) Remove wheel and tire assembly.

(4) Disconnect brake tube from rear of wheel cylinder. Cap open ends

(5) Remove brake drum.

(6) Remove brake shoes from brake support plate (Discard if contaminated).(Refer to 5 - BRAKES/HYDRAULIC/MECHANICAL/BRAKE PADS/SHOES - REMOVAL)

(7) Remove the 2 bolts attaching the wheel cylinder to the brake support plate.

(8) Remove the wheel cylinder from the brake support plate.

INSPECTION

With brake drums removed, inspect the wheel cylinder boots for evidence of a brake fluid leak. Visually check the boots for cuts, tears, or heat cracks. If any of these conditions exist, the wheel cylinders should be completely cleaned, inspected and new parts installed.

If a wheel cylinder is leaking and the brake lining material is saturated with brake fluid, the brake shoes must be replaced.

INSTALLATION

(1) Apply sealant such as Mopar Gasket-In-A-Tube or equivalent around the wheel cylinder opening in the brake support plate.

(2) Install wheel cylinder onto brake support. Install and tighten the wheel cylinder to brake support plate attaching bolts to 8 N·m (75 in. lbs.) torque.

(3) Install brake tube into wheel cylinder. Tighten tube nut to a torque of 17 N·m (145 in. lbs.) torque.

(4) Install the rear brake shoes on the brake support plate. (Refer to 5 - BRAKES/HYDRAULIC/MECHANICAL/BRAKE PADS/SHOES - INSTALLATION).

(5) Install brake drum.

(6) Install wheel and tire. Install and tighten wheel lug nuts to 135 N·m (100 ft. lbs.).

(7) Adjust drum brake shoes. (Refer to 5 - BRAKES/HYDRAULIC/MECHANICAL/BRAKE PADS/SHOES - ADJUSTMENTS)

(8) Remove brake pedal depressor tool.

(9) Bleed the brake system as necessary. (Refer to 5 - BRAKES - BASE - STANDARD PROCEDURE).

(10) Lower vehicle.

PARKING BRAKE

DESCRIPTION

DESCRIPTION

The parking brake system is operated by a foot operated parking brake lever. The parking brake lever is mounted on the body of the vehicle to the left of the brake pedal (Fig. 94). It is a automatic-adjusting type lever.

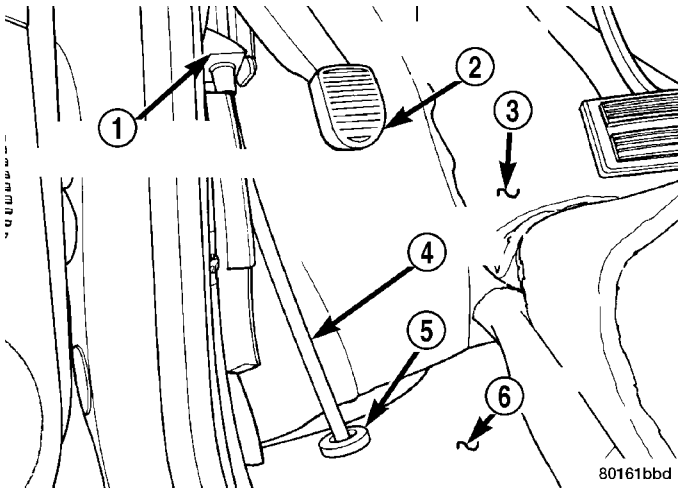

Fig. 94 Parking Brake Lever (Pedal)

1 - PARK BRAKE PEDAL ASSEMBLY
2 - PARK BRAKE PEDAL
3 - CARPET
4 - FRONT PARK BRAKE CABLE
5 - SEAL
6 - FLOOR PAN

Vehicles without Fold-in-floor seating have four flexible steel parking brake cables. They are:

- Front
- Intermediate
- Left rear
- Right rear

PARKING BRAKE (Continued)

Vehicles with Fold-in-floor seating have three flexible steel parking brake cables. They are:

- Front
- Left rear
- Right rear

The front parking brake cable extends from the parking brake lever. A steel equalizer bracket connects the front parking brake cable to the left rear and intermediate cables on vehicles without Fold-in-floor seating. The equalizer bracket connects the front parking brake cable to the left rear and right rear cables on vehicles with Fold-in-floor seating. The intermediate cable is connected to the right rear cable on vehicles without Fold-in-floor seating. A standard cable connector is used to accomplish this connection.

On vehicles equipped with rear drum brakes, the rear service brakes also act as the vehicle's parking brakes.

Vehicles equipped with rear disc brakes use a small duo-servo brake assembly mounted to the each rear disc brake caliper adapter as the parking brake. The inside of the brake rotor (hat section of drum-in-hat style brake rotor) is used as the parking brake drum.

DESCRIPTION - EXPORT

The parking brake system on this vehicle features a hand-operated parking brake lever. The lever is located between the two front seats and requires a special front cable.

OPERATION

The automatic-adjusting feature in the foot operated parking brake lever continuously applies minimal tension to the parking brake cables when the parking brake lever is in the released position to keep them in adjustment at all times. Due to this feature, the parking brake cables require no periodic adjustment.

When the parking brake lever is applied, the cables are pulled, thus applying the brake shoes (rear drum brakes) or parking brake shoes (rear disc brakes) at each rear wheel.

The brake shoes are mechanically operated by an internal lever and strut connected to the rear parking brake cables.

An equalizer bracket is used at the rear end of the front parking brake cable to distribute tension equally to each parking brake cable.

STANDARD PROCEDURE

STANDARD PROCEDURE - PARKING BRAKE AUTOMATIC ADJUSTER TENSION RELEASE

The parking brake lever (pedal) mechanism used in this vehicle is designed so that the automatic adjuster is not required to be locked out when servicing the parking brake lever (pedal) or the parking brake cables.

This parking brake lever (pedal) mechanism is designed so that the adjuster mechanism will rotate only half a turn when the tension is released from the parking brake cable. This eliminates the requirement to lock out the automatic adjuster when servicing the parking brake lever (pedal) mechanism and cables.

Use the following procedure to release the tension from the parking brake cables and the automatic adjuster in the parking brake lever (pedal) mechanism.

(1) Release the parking brake.

(2) Raise and support the vehicle. (Refer to LUBRICATION & MAINTENANCE/HOISTING - STANDARD PROCEDURE)

(3) If equipped with Fold-in-floor seating, perform the following:

(a) Clamp an appropriate pair of locking pliers on the front parking brake cable strand approximately 25 mm (1 inch) forward of the button at the equalizer (Fig. 95).

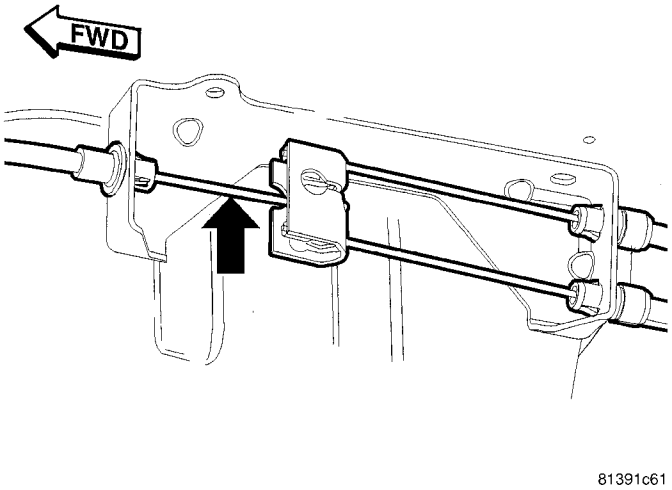

Fig. 95 Location To Grasp Cable At

PARKING BRAKE (Continued)

(b) Grasp the equalizer and pull rearward on it until enough slack is present to disconnect the equalizer from front or rear cables. While holding the front cable in this position using the locking pliers, disconnect the equalizer from cables (Fig. 96).

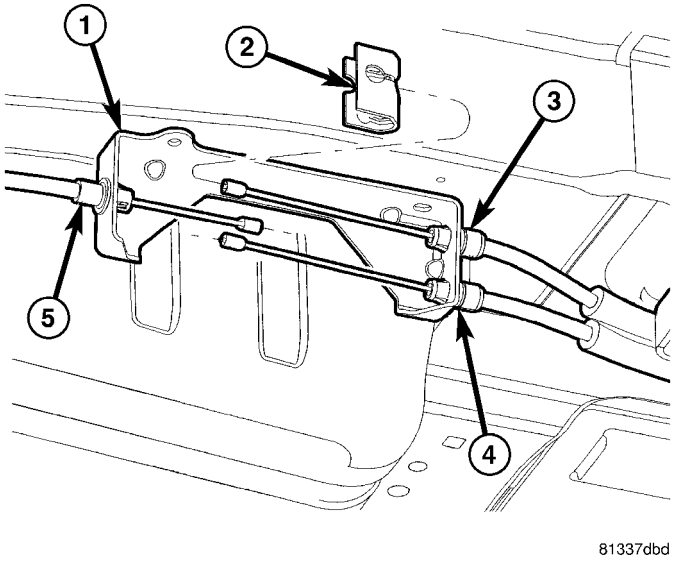

Fig. 96 Parking Brake Cable Equalizer

1 - INTERMEDIATE BRACKET
2 - EQUALIZER
3 - LEFT REAR CABLE
4 - RIGHT REAR CABLE
5 - FRONT CABLE

(c) Ease up on the front cable tension allowing the lever automatic self-adjusting mechanism to pull the front cable strand forward. This action allows the adjuster mechanism to rotate around to its stop, removing tension from the adjuster and front parking brake cable.

(d) Remove the locking pliers from the front parking brake cable as necessary.

(4) If not equipped with Fold-in-floor seating, perform the following:

(a) Grasp the exposed section of the front parking brake cable and pull rearward on it.

(b) While holding the cable in this position,

(c) Clamp an appropriate pair of locking pliers on the front parking brake cable strand just rearward of the second body outrigger bracket (Fig. 97).

(d) Disconnect the parking brake cables from the parking brake cable equalizer (Fig. 98).

(e) Remove the locking pliers from the front parking brake cable as necessary. This action allows the adjuster mechanism to rotate around to its stop, removing tension from the adjuster and front parking brake cable.

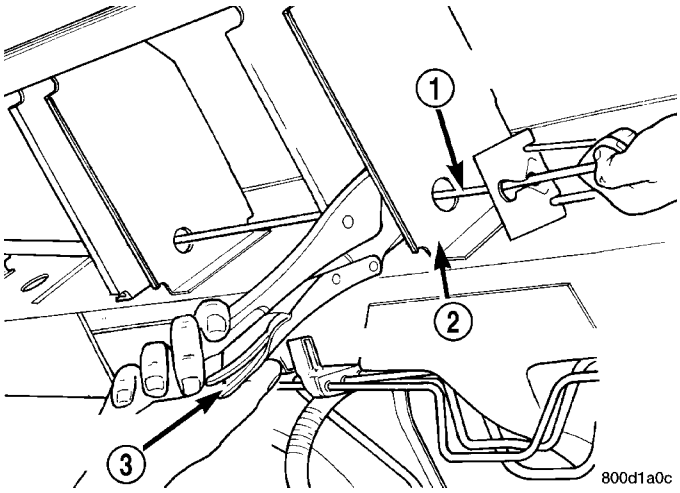

Fig. 97 Locking Out Automatic Adjuster

1 - PARK BRAKE CABLE
2 - REAR BODY OUTRIGGER BRACKET
3 - LOCKING PLIERS

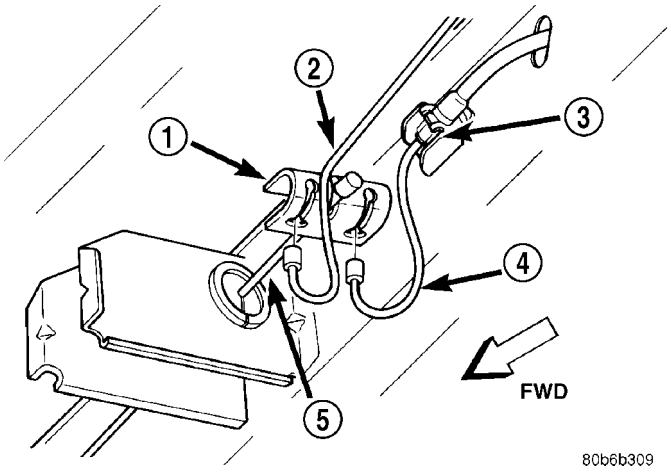

Fig. 98 Parking Brake Cable Attachment To Equalizer

1 - EQUALIZER
2 - LEFT REAR PARKING BRAKE CABLE
3 - LOCKING NUT
4 - INTERMEDIATE PARKING BRAKE CABLE
5 - FRONT PARKING BRAKE CABLE

STANDARD PROCEDURE - PARKING BRAKE AUTOMATIC ADJUSTER TENSION RESET

NOTE: This procedure is designed for vehicles without Fold-in-floor seating.

The parking brake lever (pedal) mechanism used in this vehicle is designed so that the automatic adjuster is not required to be locked out when servicing the parking brake lever (pedal) or the parking brake cables.

(1) Grasp the exposed section of the front parking brake cable and pull rearward on it. While holding

PARKING BRAKE (Continued)

the park brake in this position, install a pair of locking pliers on the front parking brake cable just rearward of the second body outrigger bracket (Fig. 97).

(2) Install the equalizer on the front parking brake cable.

(3) Install the left rear and intermediate park brake cable in the correct location on the parking brake cable equalizer (Fig. 98).

(4) Remove the locking pliers from the front parking brake cable. This will allow the adjuster in the park brake lever (pedal) mechanism to tension the park brake cables.

(5) Apply and release the parking brake lever (pedal) one time. This will seat the parking brake cables and allow the auto adjuster in the parking brake lever (pedal) mechanism to correctly tension the parking brake cables.

STANDARD PROCEDURE - CABLE END CLEANING AND LUBRICATION

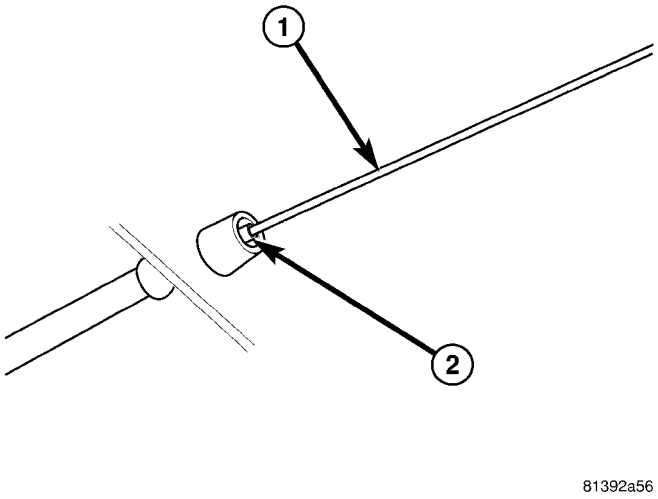

Fig. 99 Areas To Be Cleaned And Lubricated

1 - STRAND AREA
2 - SEAL AREA

Periodic cleaning and lubrication can be done to ensure proper operation of the parking brake cables. This procedure applies to the trailing end of all parking brake cables.

CAUTION: If a liquid cleaner is necessary, use a cleaner such as Mopar® Non-Chlorinated Brake Parts Cleaner or equivalent.

(1) Using an appropriate bristle brush, clean the cable strand in the area that retracts into the cable housing when the parking brake lever is applied (Fig. 99).

(2) Clean the cable seal area at the end of the cable housing (Fig. 99).

(3) Lubricate the cleaned area with a general purpose grease lubricant.

ADJUSTMENTS

ADJUSTMENT - PARKING BRAKE CABLES

The park brake cables on this vehicle have an automatic self adjuster built into the park brake pedal mechanism. When the foot operated park brake pedal is in its released (upward most) position, a clock spring automatically adjusts the park brake cables. The park brake cables are adjusted (tensioned) just enough to remove all the slack from the cables. The automatic adjuster system will not over adjust the cables causing rear brake drag.

Due to the automatic adjust feature of the park brake pedal, adjustment of the parking brake cables on these vehicles relies on proper drum brake and park brake shoe adjustment. (Refer to 5 - BRAKES/HYDRAULIC/MECHANICAL/DRUM - ADJUSTMENTS) and (Refer to 5 - BRAKES/PARKING BRAKE/SHOES - ADJUSTMENTS).

When the park brake pedal is applied the self adjuster is by-passed and the pedal operates normally to engage the park brakes.

When a service procedure needs to be performed on the park brake pedal or the park brake cables, the automatic self adjuster can be manually locked out by the service technician.

CABLE - PARKING BRAKE FRONT

REMOVAL

REMOVAL

(1) Raise and support the vehicle. (Refer to LUBRICATION & MAINTENANCE/HOISTING - STANDARD PROCEDURE).

(2) Manually release the automatic self-adjusting mechanism tension of the parking brake lever (pedal) assembly. (Refer to 5 - BRAKES - STANDARD PROCEDURE).

(3) Remove the intermediate and left rear park brake cable from the park brake cable equalizer (Fig. 100).

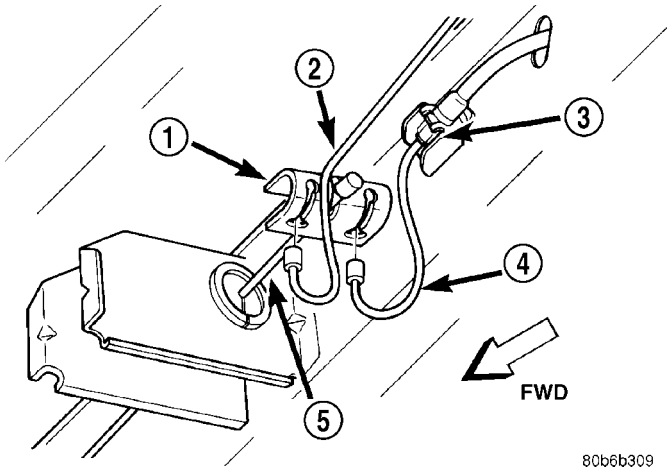

Fig. 100 Park Brake Cable Attachment To Equalizer

1 - EQUALIZER
2 - LEFT REAR PARKING BRAKE CABLE
3 - LOCKING NUT
4 - INTERMEDIATE PARKING BRAKE CABLE
5 - FRONT PARKING BRAKE CABLE

(4) Remove the front park cable housing retainer from body outrigger bracket (Fig. 101). Cable is removable by sliding a 14 mm box wrench over cable retainer and compressing the three retaining fingers. Alternate method is to use an aircraft type hose clamp and screwdriver.

(5) Lower vehicle.

(6) Remove the left front door sill molding.

(7) Remove the left front kick panel for access to the park brake cable and park brake pedal assembly.

(8) Lift floor mat for access to park brake cable and floor pan. Pull the seal and the park brake cable (Fig. 102) out of the floor pan of vehicle.

(9) Pull parking brake cable strand end forward and disconnect button from clevis. Tap cable housing end fitting out of pedal assembly bracket.

(10) Remove cable retainer from the parking brake lever (pedal) assembly bracket.

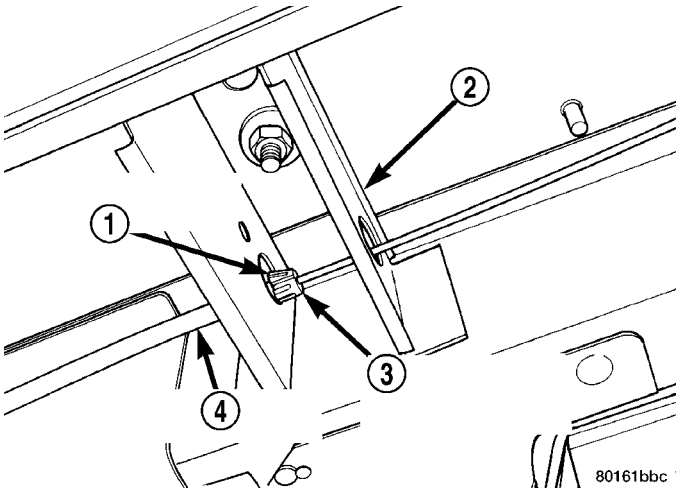

Fig. 101 Front Park Brake Cable Attachment To Body

1 - CABLE HOUSING RETAINER
2 - BODY OUTRIGGER BRACKET
3 - PUSH WRENCH OVER END OF RETAINER HERE
4 - FRONT PARK BRAKE CABLE

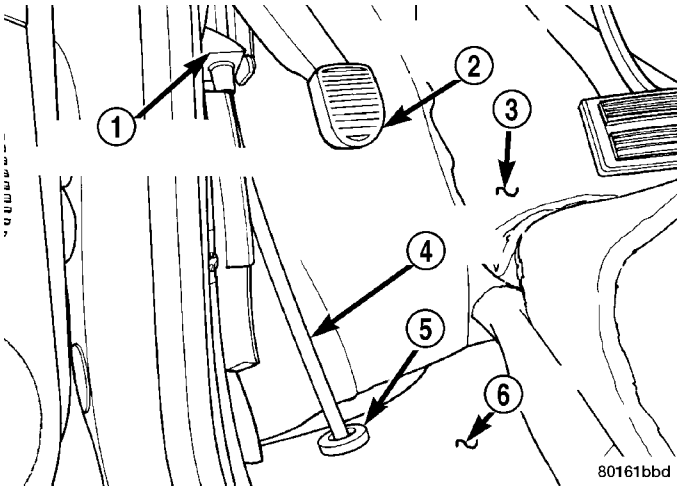

Fig. 102 Front Park Brake Cable At Floor Pan

1 - PARK BRAKE PEDAL ASSEMBLY
2 - PARK BRAKE PEDAL
3 - CARPET
4 - FRONT PARK BRAKE CABLE
5 - SEAL
6 - FLOOR PAN

(11) Pull front parking brake cable assembly out of vehicle through hole in floor pan.

REMOVAL - FOLD-IN-FLOOR SEATING

(1) Release the parking brake.

(2) Raise and support the vehicle. (Refer to LUBRICATION & MAINTENANCE/HOISTING - STANDARD PROCEDURE)

(3) Manually release the automatic self-adjusting mechanism tension of the parking brake lever (pedal) assembly. (Refer to 5 - BRAKES - STANDARD PROCEDURE).

CABLE - PARKING BRAKE FRONT (Continued)

(4) Remove the front cable from the equalizer (Fig. 103).

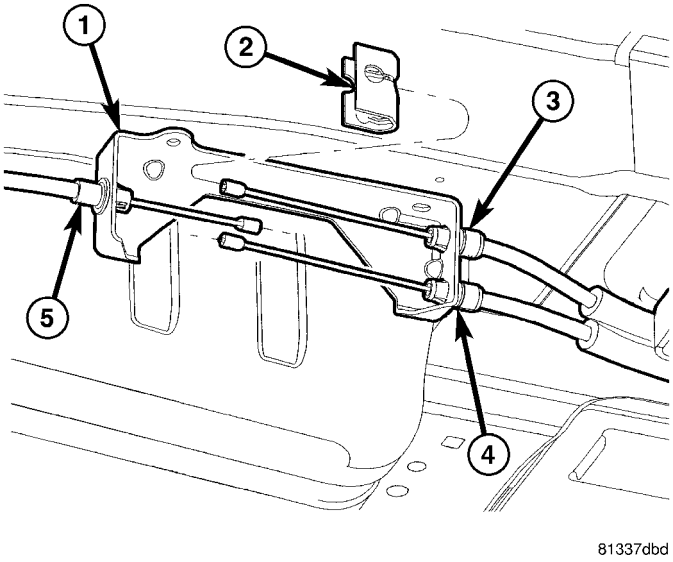

Fig. 103 Parking Brake Cable Equalizer

1 - INTERMEDIATE BRACKET
2 - EQUALIZER
3 - LEFT REAR CABLE
4 - RIGHT REAR CABLE
5 - FRONT CABLE

(5) Remove the locking pliers from the cable that were installed during Step 3.

(6) Remove the front cable from the routing clips fastened to the underbody of the vehicle (Fig. 104).

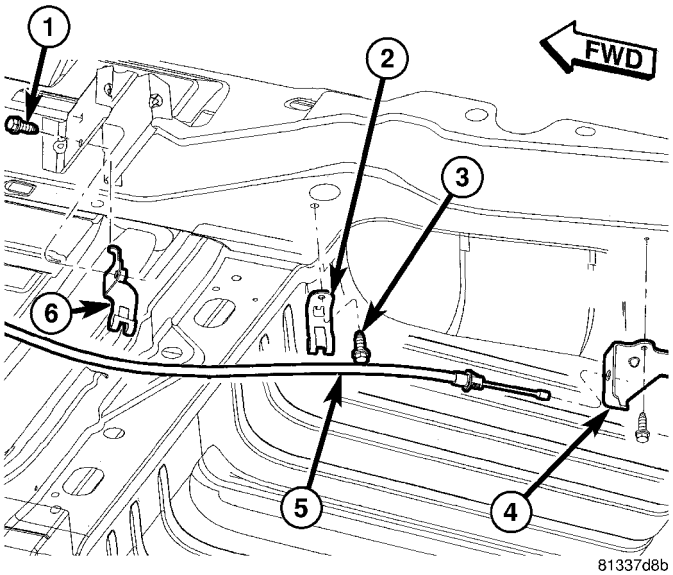

Fig. 104 Front Parking Brake Cable Routing

1 - SCREW
2 - ROUTING BRACKET
3 - SCREW
4 - INTERMEDIATE BRACKET
5 - FRONT CABLE
6 - ROUTING BRACKET

(7) Place a 13 mm 12-point box wrench over the cable retainer at the intermediate bracket as shown to collapse the retainer fingers (Fig. 105).

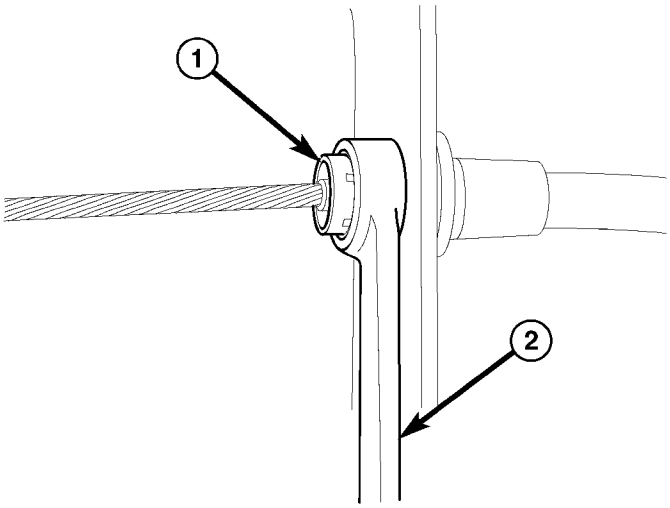

Fig. 105 Cable Removal Using Wrench

1 - CABLE RETAINER
2 - 12-POINT BOX WRENCH

(8) Pull the cable out of the intermediate bracket.

(9) Lower the vehicle.

(10) Remove the left front door sill molding.

(11) Remove the left front kick panel.

(12) Pull the parking brake cable strand forward and disconnect the end button from the lever (pedal) assembly mechanism reel (Fig. 106).

(13) Slide the cable out of the lever bracket.

(14) Lift back the carpet and pull the cable seal loose from the floor pan (Fig. 102).

(15) Pull the front parking brake cable assembly out of the vehicle through the hole in the floor pan.

REMOVAL - EXPORT

(Refer to 5 - BRAKES - BASE/PARKING BRAKE/ LEVER - REMOVAL)

INSTALLATION

INSTALLATION

(1) Pass front parking brake cable assembly through hole in floor pan from the inside of the vehicle.

(2) Pass cable strand button through the hole in the lever (pedal) assembly bracket.

(3) Install cable retainer onto the park brake cable and then install cable retainer into pedal assembly bracket.

CABLE - PARKING BRAKE FRONT (Continued)

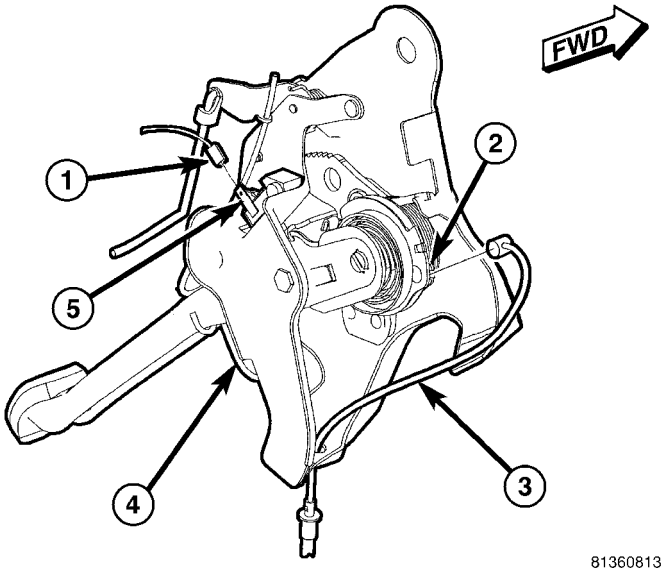

Fig. 106 Parking Brake Lever Assembly

1 - WIRING CONNECTOR
2 - MECHANISM REEL
3 - FRONT CABLE STRAND
4 - AUTO-ADJUST LOCKOUT PIN
5 - INDICATOR LAMP SWITCH

(4) Install the end of the park brake cable into the retainer previously installed into the park brake pedal bracket.

(5) Install cable strand button into the clevis on the park brake pedal mechanism.

(6) Install the front park brake cable floor pan seal into hole in floor pan. Seal is to be installed so the flange on the seal is flush with the floor pan (Fig. 102). Fold carpeting back down on floor.

(7) Raise vehicle.

(8) Insert brake cable and housing into body outrigger bracket making certain that housing retainer fingers lock the housing firmly into place (Fig. 101).

(9) Manually reset the automatic self-adjusting mechanism tension of the parking brake lever (pedal) assembly. (Refer to 5 - BRAKES - STANDARD PROCEDURE).

(10) Assemble the park brake cables onto the park brake cable equalizer (Fig. 100).

(11) Lower vehicle and apply the park brake pedal 1 time. This will seat the parking brake cables.

INSTALLATION - FOLD-IN-FLOOR SEATING

(1) Pass most of the front parking brake cable assembly down through hole in the floor pan from inside the vehicle.

(2) Pass the lever-end cable strand button through the hole in the lever (pedal) assembly bracket.

(3) Install the end of the cable housing into the retainer installed into the park brake pedal bracket.

(4) Install cable strand button into the reel on the parking brake lever mechanism (Fig. 106).

(5) Install the front parking brake cable floor pan seal into the hole in the floor pan. The seal flange should be flush with the floor pan (Fig. 102).

(6) Reposition the carpeting back down on the floor.

(7) Install the left front kick panel.

(8) Install the left front door sill molding.

(9) Raise and support the vehicle.

(10) Pass the end of the cable through the hole in the end of the intermediate bracket (Fig. 104). Press the cable housing retainer through the hole until the fingers on the retainer lock it into place.

(11) Attach the front cable to the routing clips fastened to the underbody of the vehicle (Fig. 104).

(12) Clamp an appropriate pair of locking pliers on the front cable strand approximately 25 mm (1 inch) forward of the button (Fig. 107).

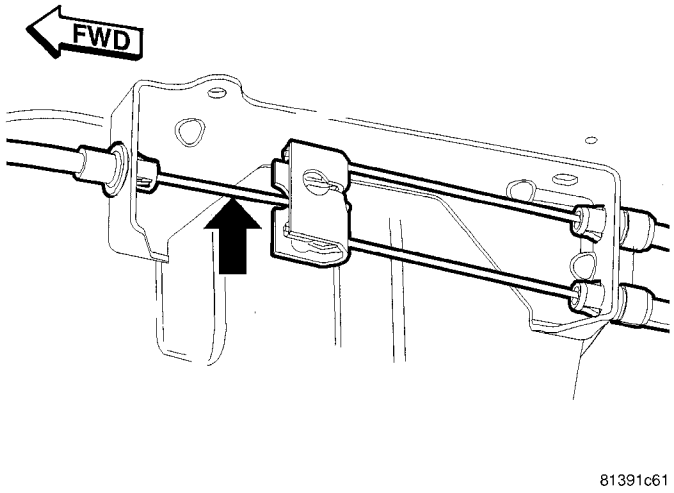

Fig. 107 Location To Grasp Cable At

(13) Pull straight back on the front cable button (and pliers) and properly attach the equalizer to all three parking brake cables (Fig. 103).

(14) Remove the locking pliers from the front parking brake cable and allow the automatic self-adjusting mechanism in the lever to take up any slack.

(15) Lower the vehicle.

(16) Apply and release park brake pedal 1 time. This will seat the parking brake cables.

INSTALLATION - EXPORT

(Refer to 5 - BRAKES - BASE/PARKING BRAKE/LEVER - INSTALLATION)

CABLE - PARKING BRAKE INTERMEDIATE

REMOVAL

(1) Raise and support the vehicle. (Refer to LUBRICATION & MAINTENANCE/HOISTING - STANDARD PROCEDURE).

(2) Manually lock out the automatic self-adjusting mechanism tension of the parking brake lever (pedal) assembly. (Refer to 5 - BRAKES - STANDARD PROCEDURE). Once the cable is released from the equalizer, do not remove the locking pliers until reinstallation of the cable is complete.

(3) Remove the intermediate parking brake cable from the parking brake cable equalizer (Fig. 108).

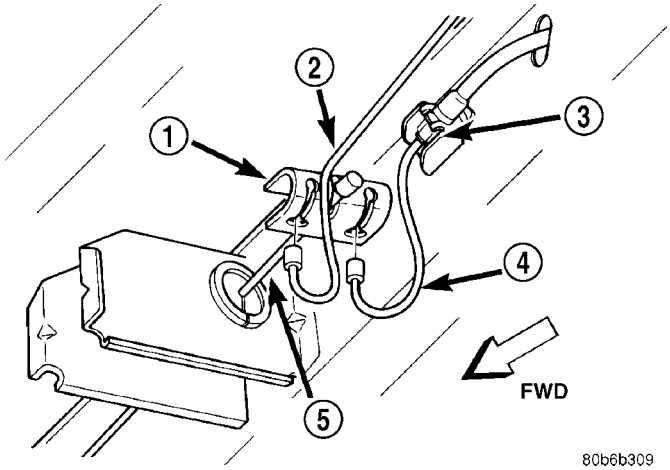

Fig. 108 Parking Brake Cable Attachment To Equalizer

1 - EQUALIZER
2 - LEFT REAR PARKING BRAKE CABLE
3 - LOCKING NUT
4 - INTERMEDIATE PARKING BRAKE CABLE
5 - FRONT PARKING BRAKE CABLE

(4) Remove the locking nut securing the intermediate cable housing to the side bracket on the frame rail (Fig. 108).

(5) Remove the intermediate parking brake cable from the cable connector attaching it to the right rear parking brake cable (Fig. 109). Remove the locking nut securing the intermediate cable housing to the side bracket on the frame rail (Fig. 109).

(6) If the vehicle is a short-wheel-base model, it will be necessary to loosen and lower the fuel tank far enough to remove the intermediate parking brake cable. (Refer to 14 - FUEL SYSTEM/FUEL DELIVERY/FUEL TANK - REMOVAL).

(7) Remove the intermediate parking brake cable from the side brackets and vehicle.

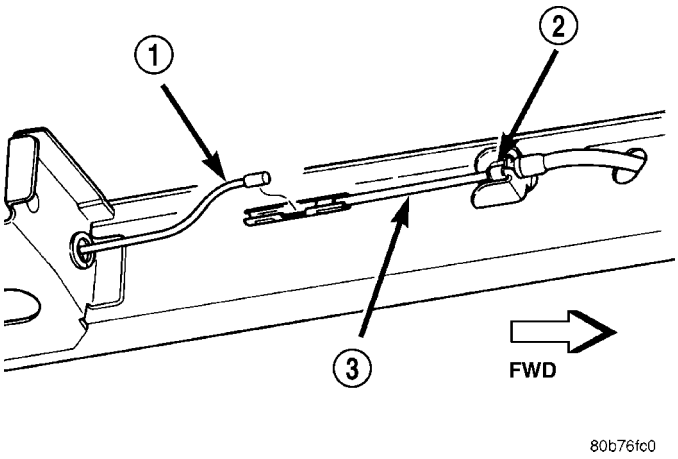

Fig. 109 Intermediate Cable Attachment To Right

1 - RIGHT REAR PARKING BRAKE CABLE
2 - LOCKING NUT
3 - INTERMEDIATE PARKING BRAKE CABLE

INSTALLATION

(1) Install the ends of the park brake cables through the frame rails and into the side brackets.

(2) Install the locking nuts at each end of the cable and securely tighten (Fig. 108) (Fig. 109).

(3) If the vehicle is a short-wheel-base model, it will be necessary to reinstall the fuel tank to its normal mounting position. (Refer to 14 - FUEL SYSTEM/FUEL DELIVERY/FUEL TANK - INSTALLATION).

(4) Install the intermediate parking brake cable on the cable connector at the right rear parking brake cable (Fig. 109).

(5) Install the intermediate park brake cable on the cable equalizer (Fig. 108).

(6) Remove the locking pliers from the front park brake cable. This will activate the automatic adjuster and correctly adjust the parking brake cables.

(7) Install and position the foam collar on the parking brake cable to prevent it from rattling against the vehicle's floor.

(8) Lower the vehicle and apply the park brake pedal 1 time, this will seat the park brake cables.

CABLE - PARKING BRAKE REAR

REMOVAL

REMOVAL - RIGHT REAR

(1) Raise and support the vehicle. (Refer to LUBRICATION & MAINTENANCE/HOISTING - STANDARD PROCEDURE).

(2) Remove rear tire and wheel assembly.

(3) Remove rear brake drum from the rear wheel of the vehicle requiring service to the rear park brake cable.

(4) Create slack in the rear parking brake cables by locking out the automatic adjuster as described here. Grasp an exposed section of front parking brake cable near the equalizer and pull down on it. At this time install a pair of locking pliers on the cable just rearward of the second body outrigger bracket (Fig. 110).

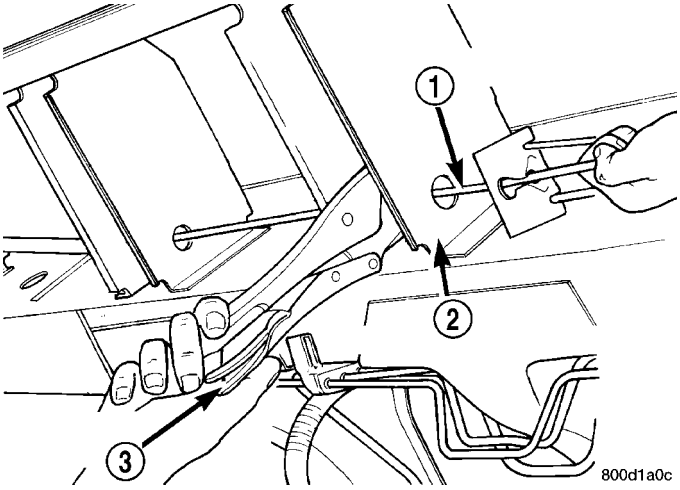

Fig. 110 Locking Out Automatic Adjuster

1 - PARK BRAKE CABLE
2 - REAR BODY OUTRIGGER BRACKET
3 - LOCKING PLIERS

(5) Disconnect the right rear parking brake cable from the connector on the intermediate cable (Fig. 111).

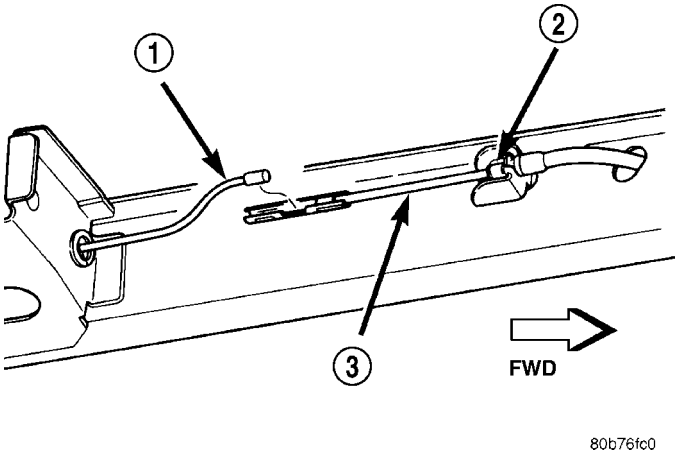

Fig. 111 Right Rear Cable Connection To Intermediate Cable

1 - RIGHT REAR PARKING BRAKE CABLE
2 - LOCKING NUT
3 - INTERMEDIATE PARKING BRAKE CABLE

(6) To remove the right parking brake cable housing from the body bracket, slide a 14 mm box end wrench over the end of cable retainer to compress the retaining fingers (Fig. 112). The alternate method using an aircraft type hose clamp will not work on the right side of the vehicle.

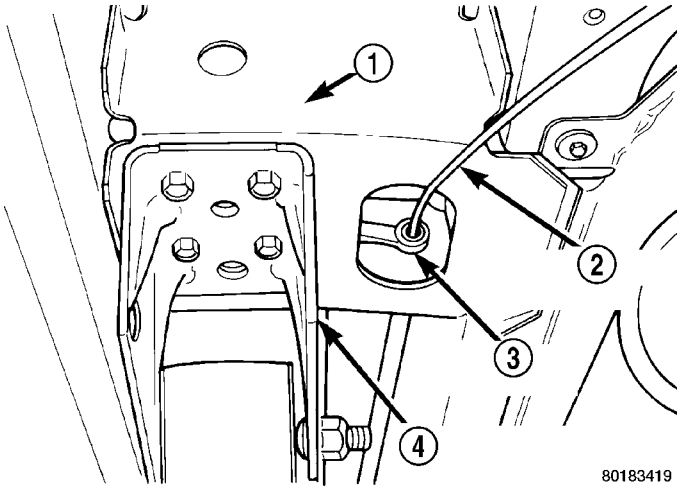

Fig. 112 Right Park Brake Cable Removal From Body Bracket

1 - RIGHT REAR BODY BRACKET
2 - PARK BRAKE CABLE
3 - 14MM WRENCH
4 - LEAF SPRING AND BRACKET

CABLE - PARKING BRAKE REAR (Continued)

(7) Remove the brake shoes from the brake support plate. (Refer to 5 - BRAKES/HYDRAULIC/MECHANICAL/BRAKE PADS/SHOES - REMOVAL).

(8) Disconnect parking brake cable from parking brake actuator lever.

(9) Remove the parking brake cable housing retainer from the brake support plate using a 14mm wrench to compress the retaining fingers (Fig. 113). Remove the cable.

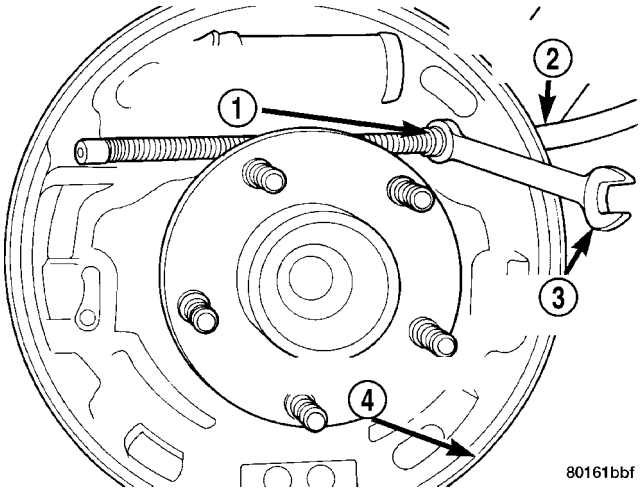

Fig. 113 Removing Park Brake Cable From Brake Support Plate

1 - PARK BRAKE CABLE RETAINER
2 - PARK BRAKE CABLE
3 - 14MM BOX WRENCH
4 - BRAKE SUPPORT PLATE

REMOVAL - LEFT REAR

(1) Raise and support the vehicle. (Refer to LUBRICATION & MAINTENANCE/HOISTING - STANDARD PROCEDURE)

(2) Remove rear tire and wheel assembly.

(3) Remove rear brake drum from the rear wheel of the vehicle requiring service to the rear park brake cable.

(4) Create slack in rear park brake cables by locking out the automatic adjuster as described here. Grasp an exposed section of front park brake cable near the equalizer and pull down on it. Then install a pair of locking pliers on the cable just rearward of the second body outrigger bracket (Fig. 114).

(5) Disconnect the left rear parking brake cable from the parking brake cable equalizer (Fig. 115).

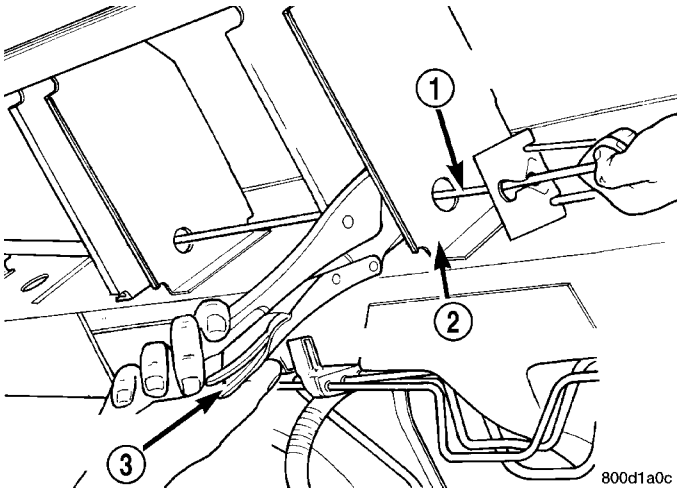

Fig. 114 Locked Out Park Brake Automatic Adjuster

1 - PARK BRAKE CABLE
2 - REAR BODY OUTRIGGER BRACKET
3 - LOCKING PLIERS

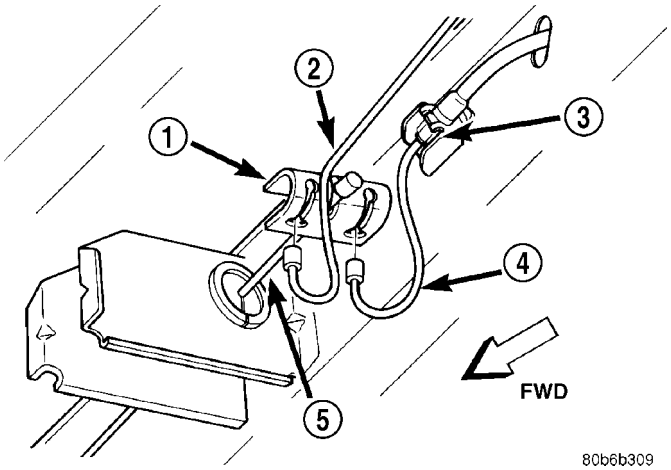

Fig. 115 Parking Brake Cables At Equalizer

1 - EQUALIZER
2 - LEFT REAR PARKING BRAKE CABLE
3 - LOCKING NUT
4 - INTERMEDIATE PARKING BRAKE CABLE
5 - FRONT PARKING BRAKE CABLE

CABLE - PARKING BRAKE REAR (Continued)

(6) To remove parking brake cable housing from the body bracket, slide a 14 mm box end wrench over retainer end compressing the three fingers (Fig. 116). Alternate method is to use an aircraft type hose clamp.

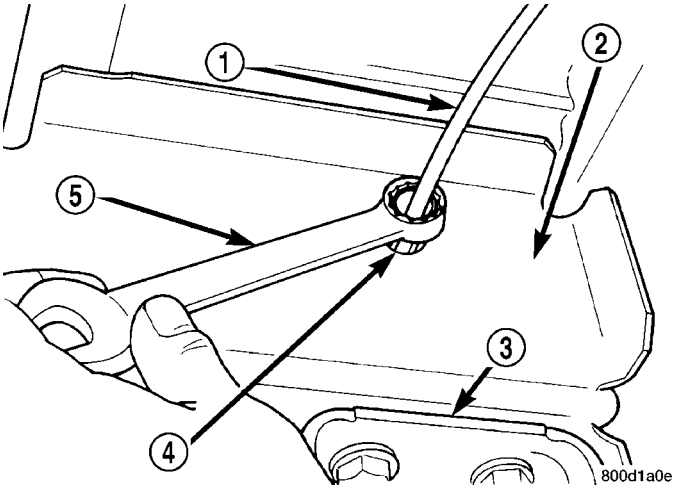

Fig. 116 Parking Brake Cable Removal From Body Bracket

1 - LEFT REAR PARK BRAKE CABLE
2 - BODY BRACKET
3 - LEAF SPRING MOUNTING BRACKET
4 - CABLE RETAINER
5 - 14MM BOX WRENCH

(7) Remove the brake shoes from the brake support plate. (Refer to 5 - BRAKES/HYDRAULIC/MECHANICAL/BRAKE PADS/SHOES - REMOVAL).

(8) Disconnect parking brake cable from parking brake actuator lever.

(9) Remove the parking brake cable housing retainer from the brake support plate using a 14mm wrench to compress the retaining fingers (Fig. 117).

REMOVAL - FOLD-IN-FLOOR SEATING

(1) Release the parking brake.

(2) Raise and support the vehicle. (Refer to LUBRICATION & MAINTENANCE/HOISTING - STANDARD PROCEDURE)

(3) Manually release the automatic self-adjusting mechanism tension of the parking brake lever (pedal) assembly. (Refer to 5 - BRAKES - STANDARD PROCEDURE)

(4) Remove the equalizer (Fig. 118).

(5) Remove the cable from the routing bracket fastened to the underbody of the vehicle (Fig. 119).

(6) If the right rear cable is being serviced, remove the screws fastening the cable routing clamps to the rear axle (Fig. 120).

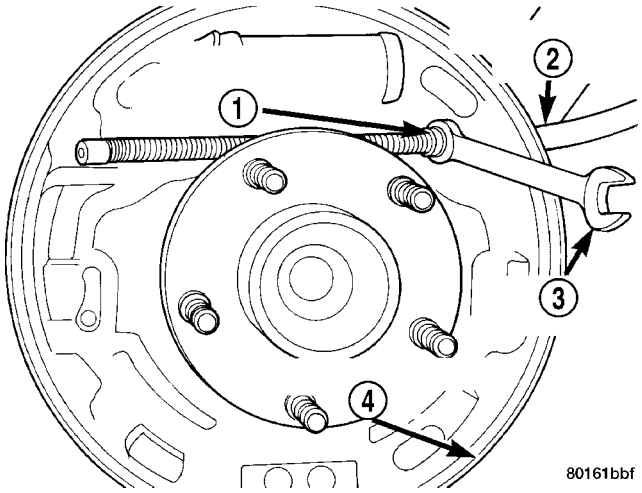

Fig. 117 Removing Parking Brake Cable From Brake Support Plate

1 - PARK BRAKE CABLE RETAINER
2 - PARK BRAKE CABLE
3 - 14MM BOX WRENCH
4 - BRAKE SUPPORT PLATE

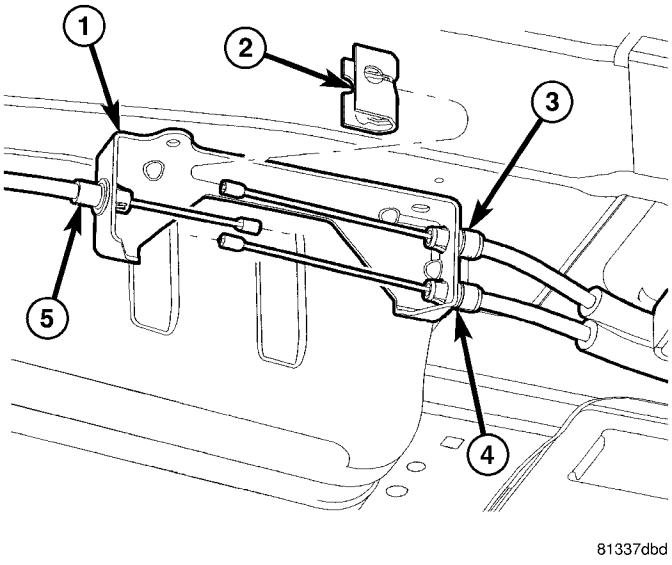

Fig. 118 Parking Brake Cable Equalizer

1 - INTERMEDIATE BRACKET
2 - EQUALIZER
3 - LEFT REAR CABLE
4 - RIGHT REAR CABLE
5 - FRONT CABLE

CABLE - PARKING BRAKE REAR (Continued)

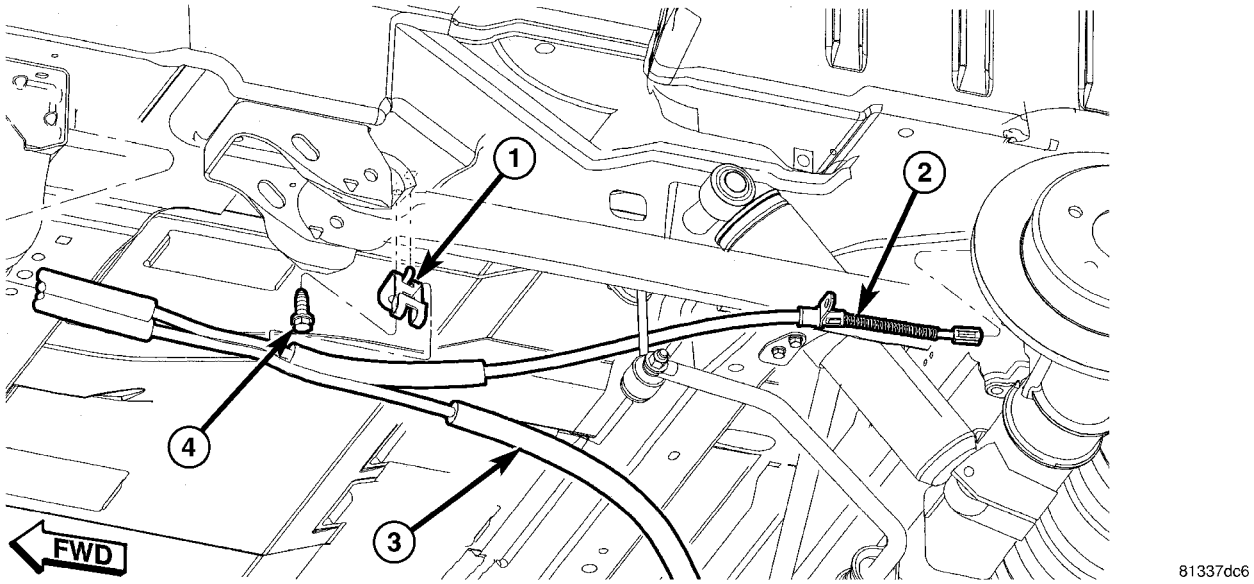

Fig. 119 Left Rear Cable Routing

1 - ROUTING BRACKET
2 - LEFT REAR CABLE
3 - RIGHT REAR CABLE
4 - SCREW

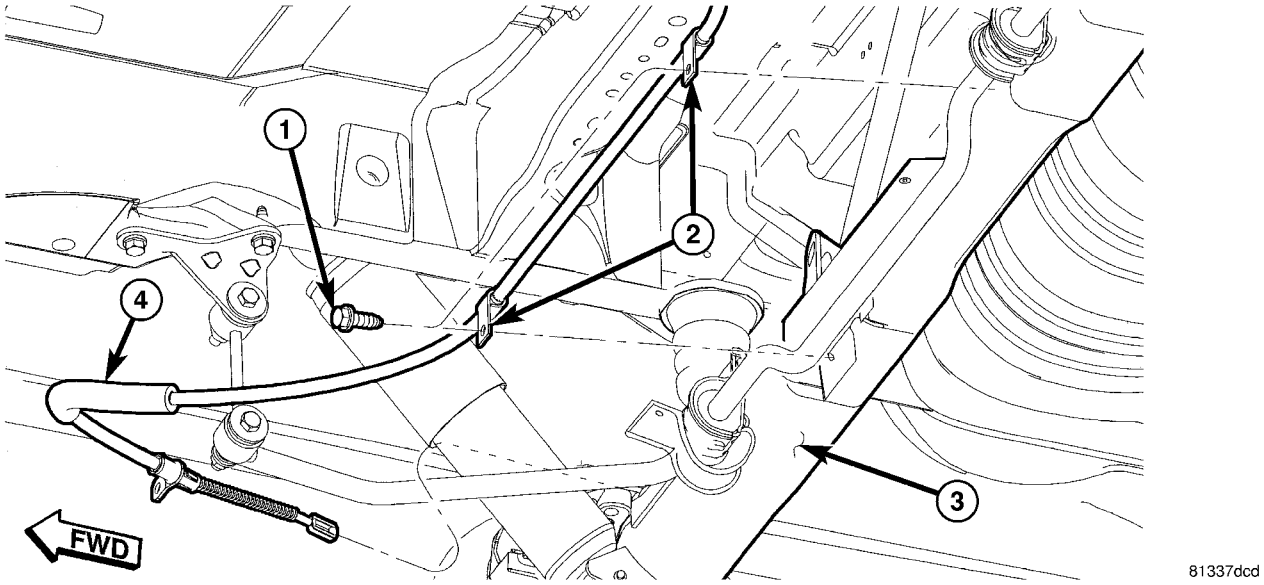

Fig. 120 Right Rear Cable Routing

1 - SCREWS
2 - ROUTING CLAMPS
3 - REAR AXLE

CABLE - PARKING BRAKE REAR (Continued)

(7) Remove the screw fastening the cable to the rear brake adapter (Fig. 121).

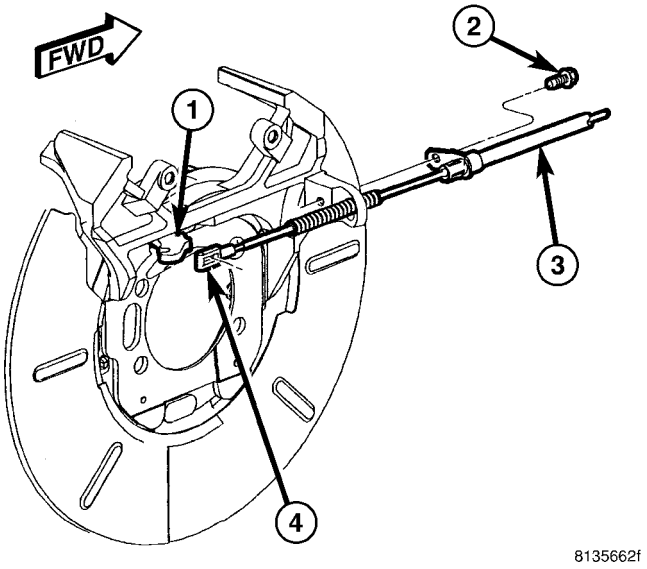

Fig. 121 Cable End At Shoe Lever

1 - SHOE LEVER
2 - SCREW
3 - PARKING BRAKE CABLE
4 - CABLE EYELET

(8) Unhook the cable eyelet from the shoe lever (Fig. 121).

(9) Slide the cable out of the brake adapter.

(10) Place a 13 mm 12-point box wrench over the cable retainer at the intermediate bracket as shown to collapse the retainer fingers (Fig. 122).

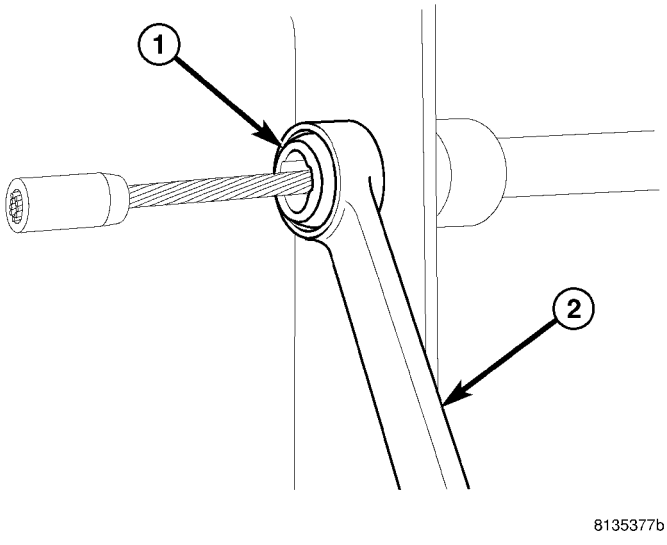

Fig. 122 Cable Removal Using Wrench

1 - CABLE RETAINER
2 - 12-POINT BOX WRENCH

(11) Pull the cable out of the intermediate bracket and remove it from the vehicle (Fig. 123).

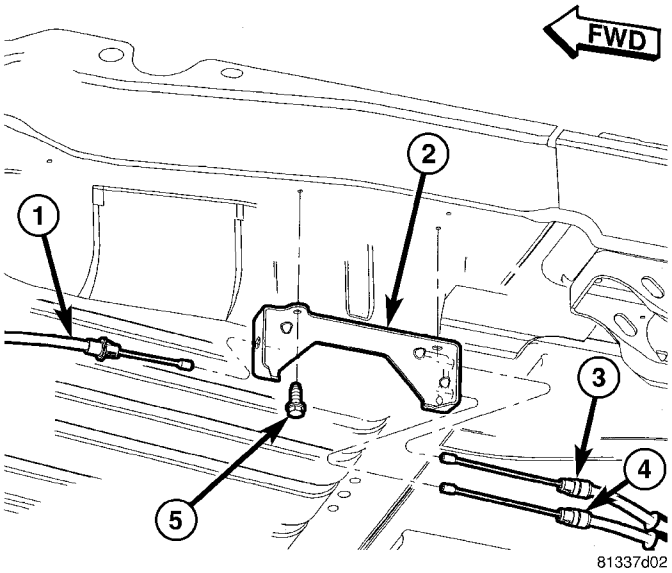

Fig. 123 Cable Intermediate Bracket

1 - FRONT CABLE
2 - INTERMEDIATE BRACKET
3 - LEFT REAR CABLE
4 - RIGHT REAR CABLE
5 - SCREW

INSTALLATION

INSTALLATION - RIGHT REAR

(1) Install the rear parking brake cable in the brake support plate. Insert cable housing retainer into brake support plate making certain that cable housing retainer fingers lock the housing and retainer firmly into place.

(2) Attach the parking brake cable onto the parking brake actuator lever.

(3) Install the brake shoes on the rear brake support plate. (Refer to 5 - BRAKES/HYDRAULIC/MECHANICAL/BRAKE PADS/SHOES - INSTALLATION).

(4) Insert cable housing retainer into body outrigger bracket making certain that cable housing retainer fingers lock the housing firmly into place.

(5) Connect the right rear parking brake cable to the connector on the intermediate parking brake cable (Fig. 111).

(6) Install the brake drum, then the wheel and tire assembly.

(7) Remove the locking pliers from the front park brake cable. This will automatically adjust the park brake cables.

(8) Lower the vehicle.

(9) Apply and release park brake pedal 1 time. This will seat the park brake cables.

CABLE - PARKING BRAKE REAR (Continued)

INSTALLATION - LEFT REAR

(1) Install the rear parking brake cable in the brake support plate. Insert cable housing retainer into brake support plate making certain that cable housing retainer fingers lock the housing and retainer firmly into place.

(2) Attach the parking brake cable onto the park brake actuator lever.

(3) Install the brake shoes on the rear brake support plate. (Refer to 5 - BRAKES/HYDRAULIC/MECHANICAL/BRAKE PADS/SHOES - INSTALLATION).

(4) Insert cable housing retainer into body outrigger bracket making certain that cable housing retainer fingers lock the housing firmly into place.

(5) Connect rear parking brake cable to the equalizer bracket (Fig. 115).

(6) Install brake drum, and wheel and tire assembly.

(7) Remove the locking pliers from the front park brake cable. This will automatically adjust the park brake cables.

(8) Apply and release park brake pedal 1 time. This will seat the park brake cables.

INSTALLATION - FOLD-IN-FLOOR SEATING

(1) Pass the leading end of the rear parking brake cable through the hole in the end of the intermediate bracket (Fig. 123). Press the cable housing retainer through the hole until the fingers on the retainer lock it into place.

(2) Route the cable back toward the brake assembly placing it in the routing clip fastened to the underbody of the vehicle (Fig. 119). Make sure to stay to the inside of the left stabilizer bar link while routing either cable.

(3) If the right rear cable is being serviced, install screws, attaching the cable routing clamps to the rear axle (Fig. 120).

(4) Pass the cable through the hole in the brake adapter and hook the cable eyelet to the shoe lever (Fig. 121).

(5) Install the screw fastening the cable to the rear brake adapter (Fig. 121).

(6) Pull straight back on the front cable button (and pliers) and properly attach the equalizer to all three parking brake cables (Fig. 118).

(7) Remove the locking pliers from the front parking brake cable and allow the automatic self-adjusting mechanism in the lever to take up any slack.

(8) Lower the vehicle.

(9) Apply and release park brake pedal 1 time. This will seat the parking brake cables.

LEVER - PARKING BRAKE

REMOVAL

(1) Manually release the automatic self-adjusting mechanism tension of the parking brake lever (pedal) assembly. (Refer to 5 - BRAKES/PARKING BRAKE - STANDARD PROCEDURE).

(2) Disconnect negative (ground) cable from the battery and isolate cable from battery terminal.

(3) Remove sill scuff plate from left door sill.

(4) Remove the left side kick panel.

(5) Remove the steering column cover from the lower instrument panel.

(6) Remove the reinforcement from the lower instrument panel.

(7) Remove the three bolts mounting the wiring junction block to the instrument panel.

NOTE: When removing the lower mounting bolt, push the park brake pedal down 5 clicks to access the lower mounting bolt.

(8) Remove the lower bolt mounting the parking brake lever (pedal) to the body (Fig. 124).

(9) Remove the forward nut mounting the parking brake lever to the body (Fig. 124).

(10) Remove the upper bolt mounting the parking brake lever to the body (Fig. 124).

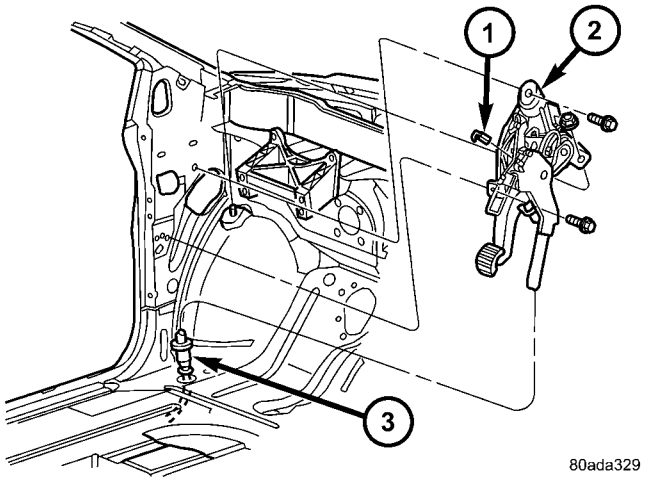

Fig. 124 Parking Brake Lever Mounting

1 - WIRE HARNESS CONNECTOR
2 - LEVER MECHANISM
3 - FRONT CABLE

(11) Pull downward on front parking brake cable while rotating lever assembly out from behind junction block.

(12) Remove the release link from the parking brake lever assembly.

(13) Disconnect the wiring connector from the indicator lamp ground switch (Fig. 124) (Fig. 125).

LEVER - PARKING BRAKE (Continued)

(14) Remove front parking brake cable strand button from the lever mechanism reel (Fig. 125).

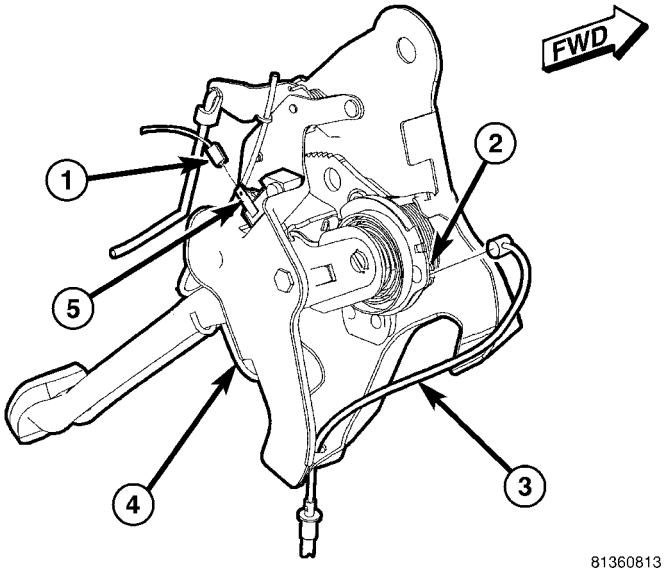

Fig. 125 Parking Brake Lever Assembly

1 - WIRING CONNECTOR
2 - MECHANISM REEL
3 - FRONT CABLE STRAND
4 - AUTO-ADJUST LOCKOUT PIN
5 - INDICATOR LAMP SWITCH

(15) Remove the parking brake lever assembly from the cable.

INSTALLATION

(1) Install the parking brake cable end housing into the mounting hole in the parking brake lever (pedal) assembly.

(2) Install cable strand button into the reel on the parking brake pedal mechanism (Fig. 125).

(3) Connect the wiring connector to the indicator lamp ground switch (Fig. 125).

(4) Install the release link on the release mechanism of the parking brake lever.

(5) Position the lever into its installed position on the body of the vehicle.

(6) Loosely install the top bolt mounting the lever to the body (Fig. 124).

(7) Loosely install the forward nut mounting the lever to the body (Fig. 124).

(8) Loosely install the lower bolt mounting the lever to the body (Fig. 124).

(9) Tighten lever mounting bolts and nut to 28 N·m (250 in. lbs.).

(10) Verify that the parking brake lever is in the fully released (full up) position.

(11) Raise and support the vehicle.

(12) Install the front parking brake cable on the cable equalizer. If a new lever assembly is NOT being installed, perform PARKING BRAKE AUTOMATIC ADJUSTER TENSION RESET as necessary. (Refer to 5 - BRAKES/PARKING BRAKE - STANDARD PROCEDURE)

NOTE: If the original lever assembly is being used, the lever mechanism auto adjuster spring tension will need to be reset.

(13) Lower vehicle.

(14) If a new lever is being installed, remove the lockout pin from the automatic adjuster on the parking brake lever mechanism allowing the automatic self-adjusting mechanism in the lever to take up any slack (Fig. 125).

(15) Install the electrical junction block on the instrument panel.

(16) Install the reinforcement on the lower instrument panel.

(17) Install the steering column lower cover on the lower instrument panel.

(18) Install the left side kick panel.

(19) Install the sill scuff plate on the lower sill of the left door.

(20) Install the negative (ground) cable on the battery.

(21) Cycle the parking brake pedal one time. This will seat the park brake cables and allow the automatic self-adjuster to properly tension the parking brake cables.

LEVER - PARKING BRAKE (EXPORT)

REMOVAL - PARKING BRAKE LEVER AND FRONT CABLE

(1) Raise vehicle. (Refer to LUBRICATION & MAINTENANCE/HOISTING - STANDARD PROCEDURE)

(2) Grasp the exposed section of the front parking brake cable and pull rearward on it. While holding the park brake in this position, install a pair of locking pliers on the front parking brake cable just rearward of the second body outrigger bracket (Fig. 126).

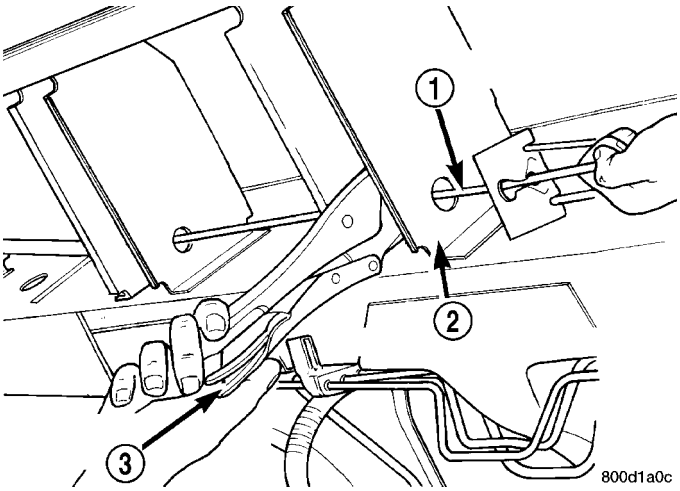

Fig. 126 Locking Out Automatic Adjuster

1 - PARK BRAKE CABLE
2 - REAR BODY OUTRIGGER BRACKET
3 - LOCKING PLIERS

(3) Remove the left rear and intermediate parking brake cables from the parking brake cable equalizer (Fig. 127).

(4) Remove the equalizer from the front parking brake cable.

(5) Remove the locking pliers from the front parking brake cable. This will allow the adjuster in the parking brake lever mechanism to rotate around to its stop and remove the tension from the adjuster and front park brake cable.

(6) Remove the front parking brake cable housing from body outrigger bracket. Cable is removable by sliding a 14 mm box wrench over the cable retainer and compressing the three retaining fingers. **Alternate method:** Use an aircraft type hose clamp and screwdriver.

(7) Remove the four mounting nuts from the bottom of the parking brake lever bracket.

(8) Lower vehicle.

(9) Remove the floor console. (Refer to 23 - BODY/INTERIOR/FLOOR CONSOLE - REMOVAL)

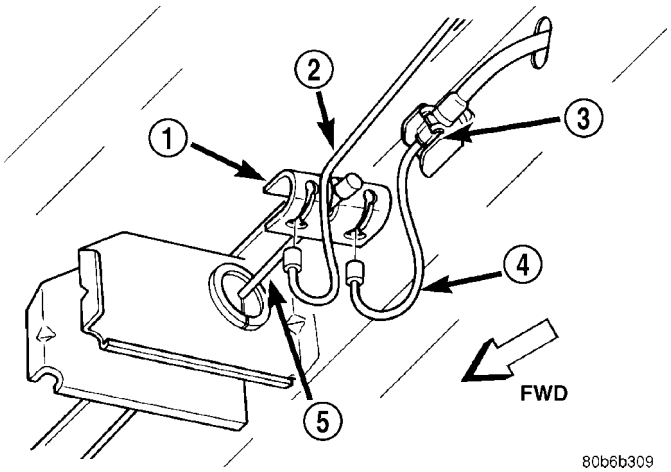

Fig. 127 Parking Brake Cable Equalizer

1 - EQUALIZER
2 - LEFT REAR PARKING BRAKE CABLE
3 - LOCKING NUT
4 - INTERMEDIATE PARKING BRAKE CABLE
5 - FRONT PARKING BRAKE CABLE

(10) If equipped with a manual transaxle, remove the gearshift mechanism. (Refer to 21 - TRANSMISSION/TRANSAXLE/MANUAL/SHIFT MECHANISM - REMOVAL)

(11) Unhook the end of the parking brake cable from the lever mechanism.

(12) Compress the parking brake cable retainer by sliding a 14 mm wrench over the cable retainer and compress the three (3) retaining fingers.

(13) Remove the three screws from the parking brake grommet on the floor pan of the passenger compartment.

(14) Lift the parking brake lever and slide the parking brake cable out.

(15) Pull the cable through the floor pan from inside the vehicle.

INSTALLATION - PARKING BRAKE LEVER AND FRONT CABLE

(1) Pass the parking brake cable down through the hole in the floor pan from inside of vehicle.

(2) Pass cable end button through the hole in the lever bracket and press the cable housing into the hole until all three retaining fingers lock the cable to the lever bracket.

(3) Hook the end of the parking brake cable on the parking brake lever mechanism.

(4) Press the cable grommet into the hole in the floor pan and install the three screws securing it to the floor pan.

(5) If equipped with a manual transaxle, install the gearshift mechanism. (Refer to 21 - TRANSMISSION/TRANSAXLE/MANUAL/SHIFT MECHANISM - INSTALLATION)

LEVER - PARKING BRAKE (EXPORT) (Continued)

(6) Install the floor console. (Refer to 23 - BODY/ INTERIOR/FLOOR CONSOLE - INSTALLATION)

(7) Raise the vehicle.

(8) Install the four mounting nuts securing the parking brake lever bracket in place.

(9) Install the front park cable housing retainer to the body outrigger bracket. Press the cable housing into the outrigger hole until all three retaining fingers lock the cable in place.

(10) Grasp the exposed section of the front parking brake cable and pull rearward on it. While holding the park brake in this position, install a pair of locking pliers on the front parking brake cable just rearward of the second body outrigger bracket.

(11) Install the equalizer on the front parking brake cable and install the left rear and intermediate park brake cable in the correct location on the parking brake cable equalizer (Fig. 127).

(12) Remove the locking pliers from the front parking brake cable. This will allow the adjuster in the park brake lever mechanism to tension the parking brake cables.

(13) Lower the vehicle.

(14) Apply and release the parking brake lever one time. This will seat the parking brake cables and allow the auto adjuster in the parking brake lever mechanism to correctly tension the parking brake cables.

SHOES - PARKING BRAKE

REMOVAL

(1) AWD only - Set the parking brake. **The parking brake is set to keep the hub/bearing and axle shaft from rotating when loosening the hub nut.**

(2) Raise vehicle. (Refer to LUBRICATION & MAINTENANCE/HOISTING - STANDARD PROCEDURE).

(3) Remove the wheel and tire assembly.

(4) AWD only - Remove the cotter pin and nut retainer (Fig. 128) from the stub shaft of the outer C/V joint.

(5) AWD only - Remove the spring washer (Fig. 129) from the stub shaft of the outer C/V joint.

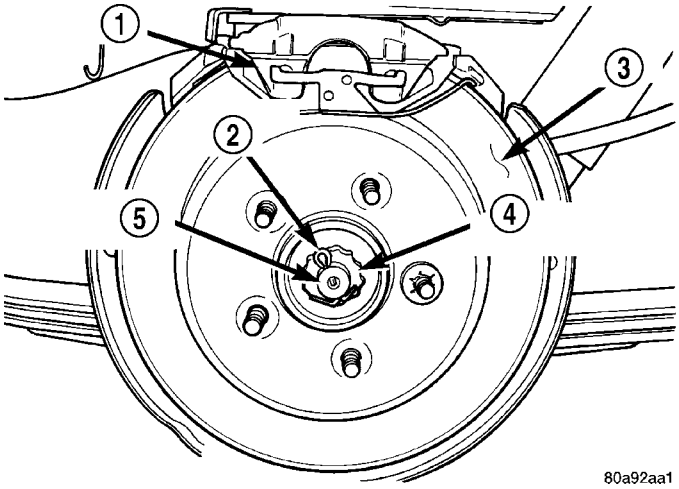

Fig. 128 Cotter Pin And Nut Retainer

1 - CALIPER
2 - COTTER PIN
3 - ROTOR
4 - NUT RETAINER
5 - OUTER C/V JOINT

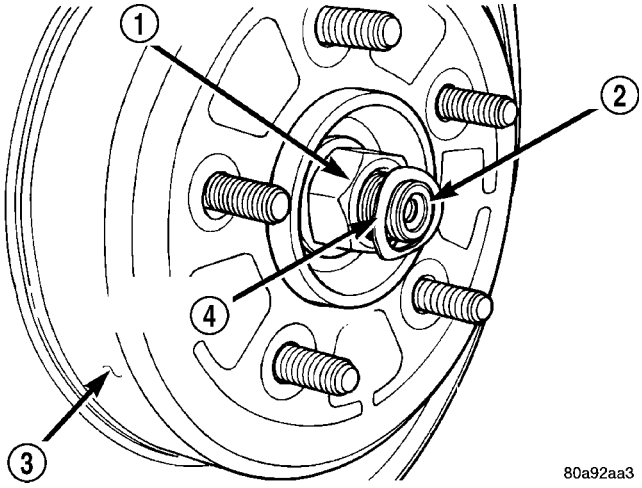

Fig. 129 Spring Washer

1 - HUB NUT
2 - STUB SHAFT
3 - ROTOR
4 - SPRING WASHER

SHOES - PARKING BRAKE (Continued)

(6) AWD only - Remove the hub nut and washer (Fig. 130) from the stub shaft of the outer C/V joint.

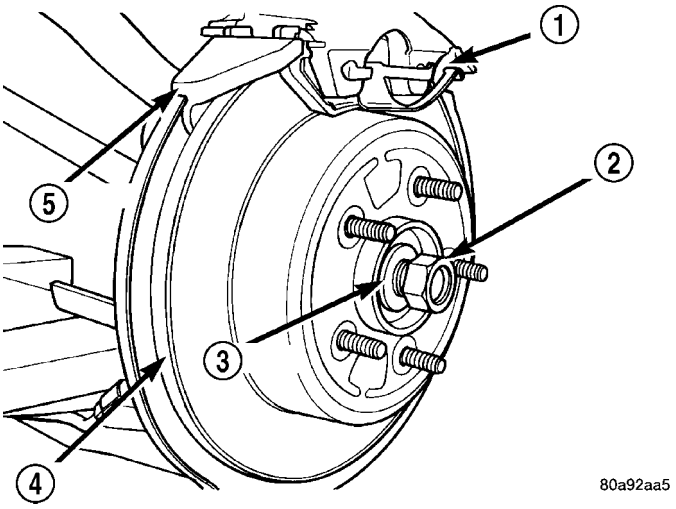

Fig. 130 Hub Nut And Washer

1 - CALIPER
2 - HUB NUT
3 - WASHER
4 - ROTOR
5 - ADADPTER

(7) Release the parking brake.

(8) Create slack in the rear park brake cables by locking the out the automatic adjuster as described. Grasp the exposed section of front park brake cable and pull downward on it. Then install a pair of locking pliers on the front park brake cable just rearward of the second body outrigger bracket (Fig. 131).

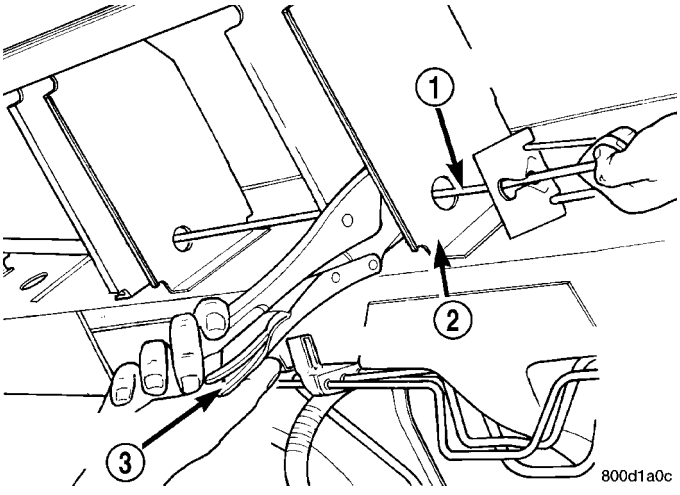

Fig. 131 Locking Out Automatic Adjuster

1 - PARK BRAKE CABLE
2 - REAR BODY OUTRIGGER BRACKET
3 - LOCKING PLIERS

(9) Remove the disc brake caliper to adapter guide pin bolts (Fig. 132).

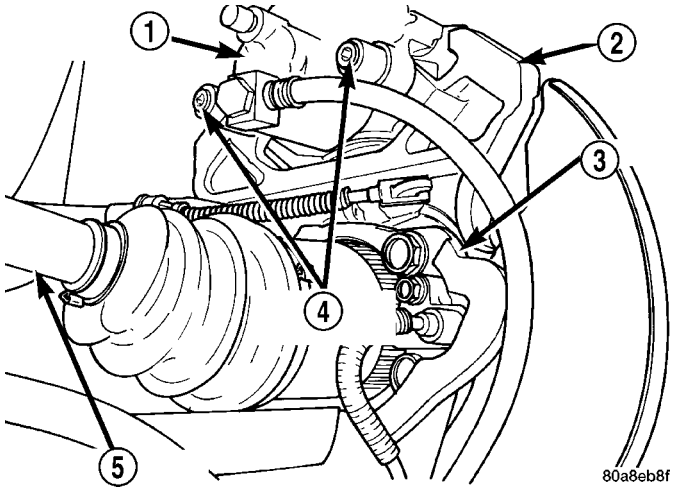

Fig. 132 Removing Caliper Guide Pin Bolts

1 - DISC BRAKE CALIPER
2 - ADAPTER
3 - AXLE
4 - GUIDE PIN BOLTS
5 - DRIVESHAFT (AWD MODELS ONLY)

(10) Remove rear caliper from adapter using the following procedure. First rotate front of caliper up from the adapter. Then pull the rear of the caliper and the outboard brake shoe anti-rattle clip out from under the rear abutment on the adapter (Fig. 133).

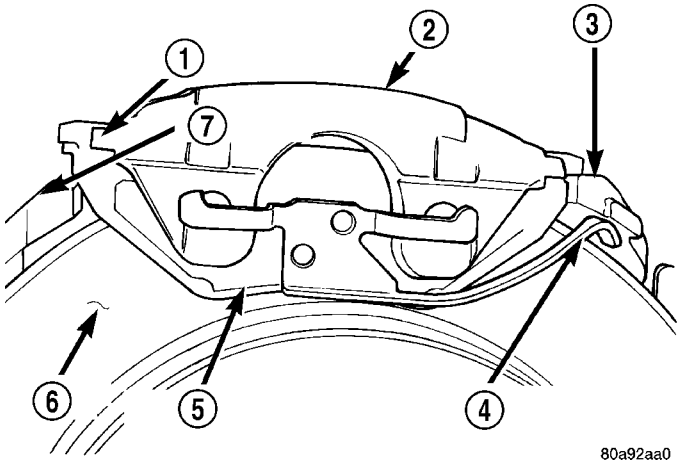

Fig. 133 Removing/Installing Caliper

1 - LIFT THIS END OF CALIPER AWAY FROM ADAPTER FIRST
2 - DISC BRAKE CALIPER
3 - ADAPTER ABUTMENT
4 - OUTBOARD BRAKE SHOE HOLD DOWN CLIP
5 - OUTBOARD BRAKE SHOE
6 - ROTOR
7 - ADAPTER

SHOES - PARKING BRAKE (Continued)

(11) Support caliper to prevent the weight of the caliper from damaging the flexible brake hose (Fig. 134).

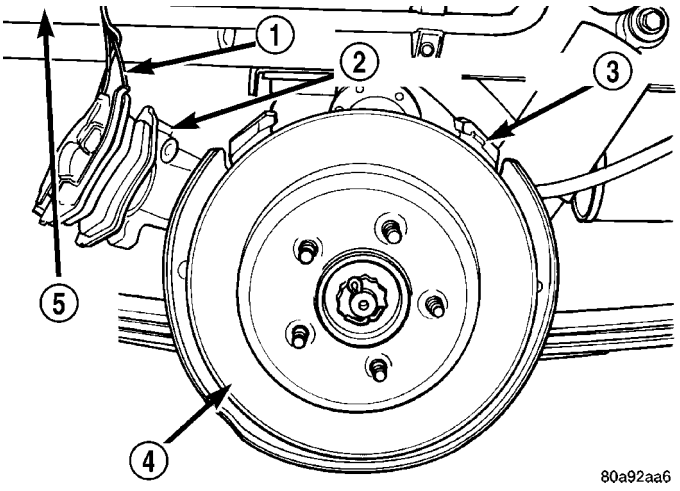

Fig. 134 Correctly Supported Caliper

1 - WIRE
2 - CALIPER
3 - ADAPTER
4 - ROTOR
5 - INNER FENDER

(12) Remove the rotor from the hub/bearing.

(13) Remove the park brake cable mounting bolt to adapter.

(14) Remove the end of the park brake cable from the actuator lever on the adapter (Fig. 135).

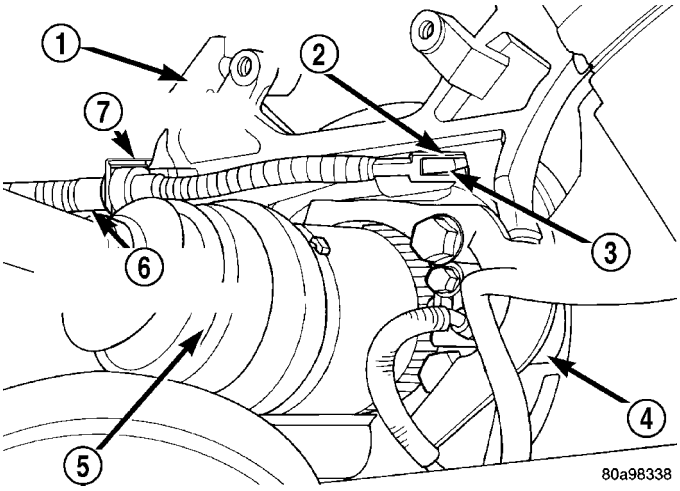

Fig. 135 Park Brake Cable Attachment To Actuator

1 - ADAPTER
2 - PARK BRAKE CABLE
3 - ACTUATOR
4 - AXLE
5 - DRIVESHAFT
6 - PARK BRAKE CABLE RETAINER
7 - HORSESHOE CLIP

(15) Remove the end of the park brake cable from the adapter. Park brake cable is removed from adapter using a 1/2 wrench slipped over the park brake cable retainer as show in (Fig. 136) to compress the locking tabs on the park brake cable retainer.

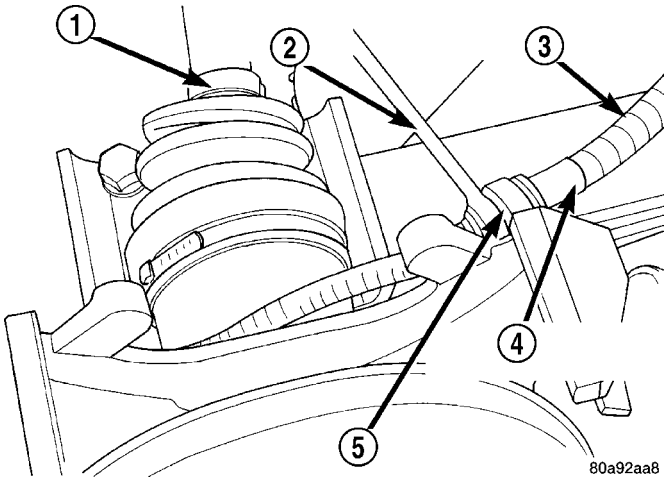

Fig. 136 Park Brake Cable Removal From Adapter

1 - DRIVESHAFT
2 - 1/2" WRENCH
3 - PARK BRAKE CABLE
4 - PARK BRAKE CABLE RETAINER
5 - ADAPTER

(16) AWD only - Remove ABS wheel speed sensor head from hub/bearing (Fig. 137).

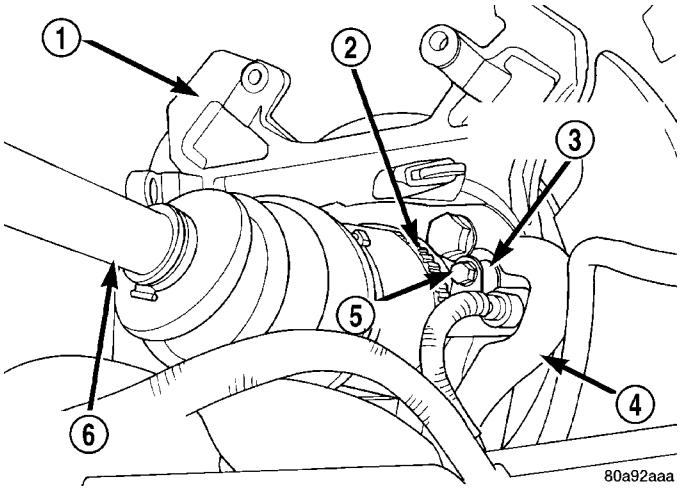

Fig. 137 Speed Sensor Attaching Bolt (AWD)

1 - ADAPTER
2 - TONE WHEEL
3 - WHEEL SPEED SENSOR
4 - AXLE
5 - BOLT
6 - DRIVESHAFT

SHOES - PARKING BRAKE (Continued)

(17) FWD only - Remove the ABS wheel speed sensor from the hub/bearing in the following fashion:

(a) Remove secondary (yellow) retaining clip at rear of wheel speed sensor head (Fig. 138).

(b) Push up on metal retaining clip (Fig. 138) until it bottoms. This will release wheel speed sensor head from hub and bearing. While holding metal clip up, pull back on wheel speed sensor head removing it from hub and bearing.

(c) Remove wheel speed sensor from hub/bearing.

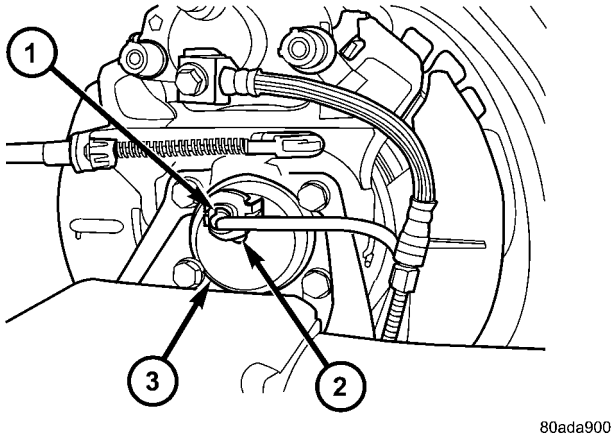

Fig. 138 Sensor Connection At Hub And Bearing

1 - SECONDARY SENSOR RETAINING CLIP
2 - METAL SENSOR RETAINING CLIP
3 - HUB AND BEARING

(18) Remove the hub/bearing-to-axle mounting bolts (Fig. 139).

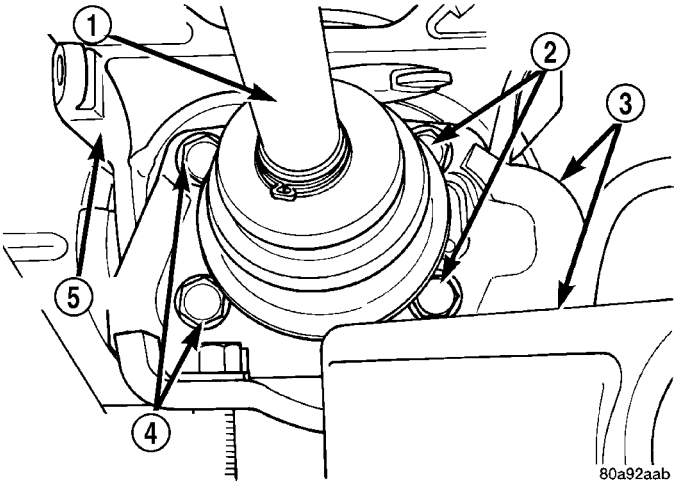

Fig. 139 Hub/Bearing Mounting Bolts (AWD Shown)

1 - DRIVESHAFT
2 - MOUNTING BOLTS
3 - AXLE
4 - MOUNTING BOLTS
5 - ADAPTER

(19) Remove the hub/bearing (Fig. 140).

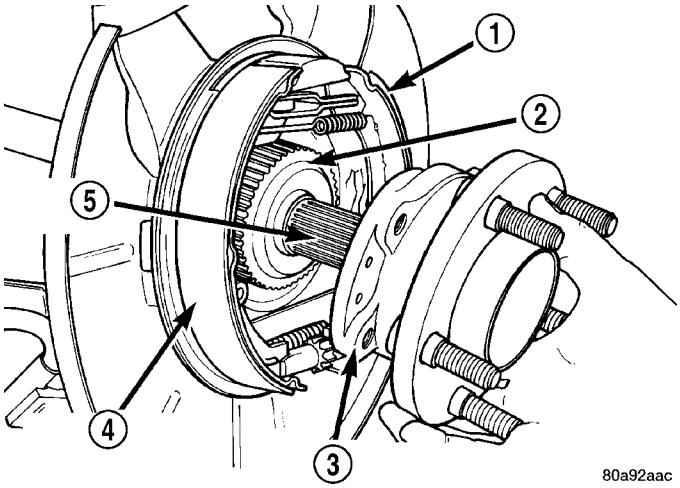

Fig. 140 Hub/Bearing Removal/Installation (AWD Shown)

1 - PARK BRAKE BRAKE SHOE
2 - OUTER C/V JOINT
3 - HUB/BEARING
4 - PARK BRAKE BRAKE SHOE
5 - STUB SHAFT

SHOES - PARKING BRAKE (Continued)

CAUTION: Corrosion may occur between the hub/bearing and the axle flange. If this occurs, the hub/bearing will be difficult to remove from the axle and disc brake caliper adapter. If the hub/bearing will not come out by pulling on it by hand, don't not pound on it with a hammer. Pounding on the hub/bearing will damage it. To remove a hub/bearing that is corroded in place, lightly tap the disc brake caliper adapter using a soft-face hammer. This will remove both the caliper adapter and hub/bearing together from the axle. With a helper supporting the caliper adapter in his hands, position Remover, Special Tool 8214-1, on the cast housing of hub/bearing (Fig. 141). Do not position the special tool on the inner race of hub/bearing. Lightly strike the Remover with a hammer to remove the hub/bearing from the caliper adapter.

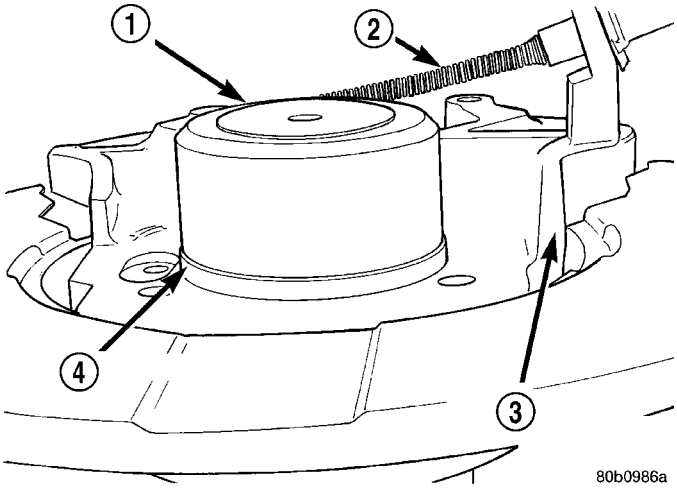

Fig. 141 Hub/Bearing Removal From Caliper Adapter

1 - SPECIAL TOOL 8214-1
2 - PARK BRAKE CABLE
3 - DISC BRAKE CALIPER ADAPTER
4 - HUB/BEARING

(20) Remove the adapter from the rear axle.

(21) Mount the adapter in a vise using the anchor boss for the park brake cable (Fig. 142).

(22) Remove the lower return spring (Fig. 143) from the leading and trailing park brake shoes.

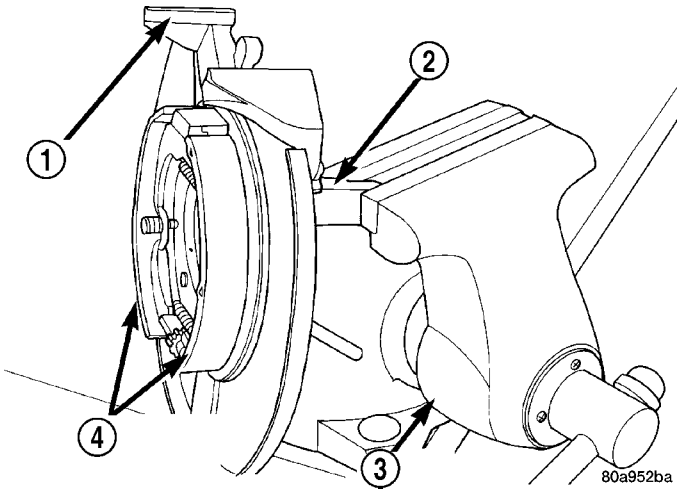

Fig. 142 Adapter Mounted In Vise

1 - ADAPTER
2 - PARK BRAKE CABLE BOSS
3 - VISE
4 - PARK BRAKE BRAKE SHOES

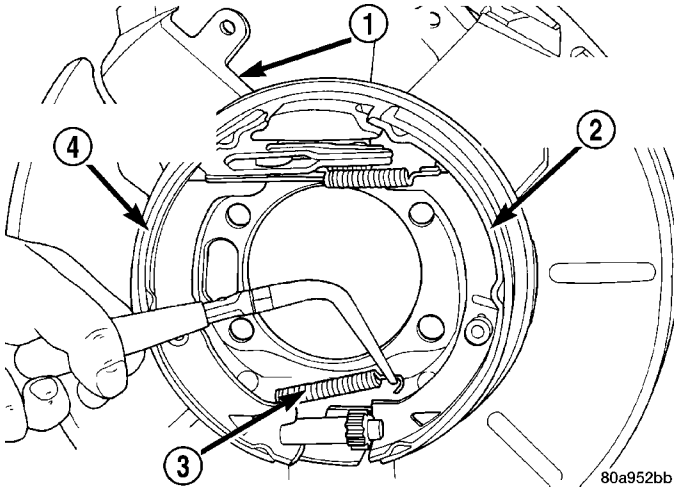

Fig. 143 Lower Return Spring

1 - ADAPTER
2 - LEADING PARK BRAKE SHOE
3 - RETURN SPRING
4 - TRAILING PARK BRAKE SHOE

SHOES - PARKING BRAKE (Continued)

(23) Remove the hold down spring and pin (Fig. 144) from the leading park brake shoe.

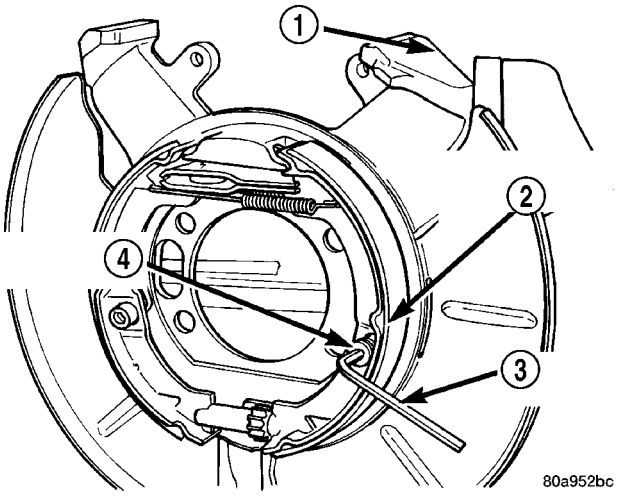

Fig. 144 Leading Brake Shoe Hold Down Pin And Spring

1 - ADAPTER
2 - LEADING PARK BRAKE SHOE
3 - ALLEN WRENCH
4 - HOLD DOWN SPRING/PIN

(24) Remove the adjuster (Fig. 145) from the leading and trailing park brake shoe.

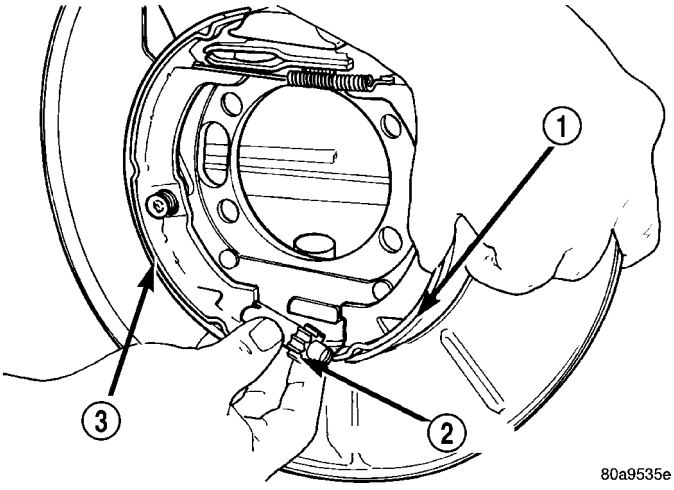

Fig. 145 Brake Shoe Adjuster

1 - LEADING PARK BRAKE SHOE
2 - ADJUSTER
3 - TRAILING PARK BRAKE SHOE

(25) Remove the leading park brake shoe (Fig. 146) from the adapter. Leading brake shoe is removed by rotating the bottom of the brake shoe inward (Fig. 146) until the top of the brake shoe can be removed from the brake shoe anchor. Then remove the upper return springs (Fig. 146) from the leading brake shoe.

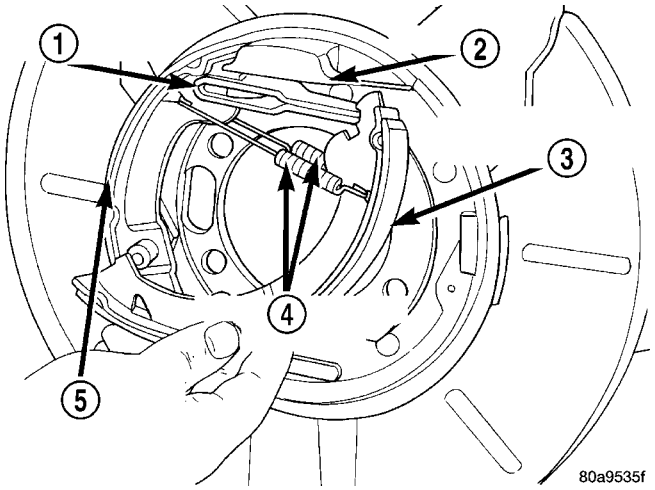

Fig. 146 Primary Brake Shoe Remove/Install

1 - PARK BRAKE ACTUATOR
2 - ANCHOR
3 - LEADING PARK BRAKE SHOE
4 - UPPER RETURN SPRINGS
5 - TRAILING PARK BRAKE SHOE

(26) Remove the upper return springs (Fig. 147) from the trailing park brake shoe.

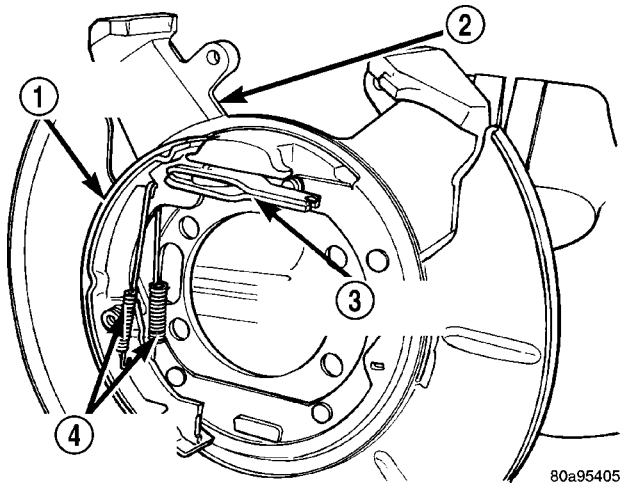

Fig. 147 Upper Return Springs

1 - TRAILING PARK BRAKE SHOE
2 - ADAPTER
3 - PARK BRAKE ACTUATOR
4 - UPPER RETURN SPRINGS

SHOES - PARKING BRAKE (Continued)

(27) Remove the hold down spring and pin (Fig. 148) from the trailing park brake shoe.

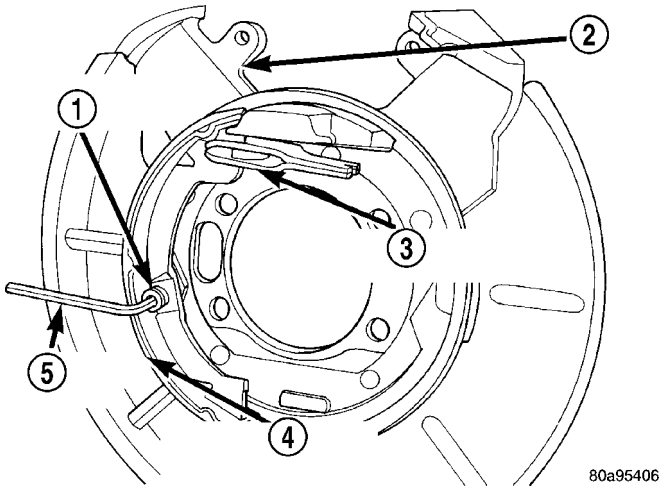

Fig. 148 Trailing Brake Shoe Hold Down Pin And Spring

1 - HOLD DOWN SPRING PIN
2 - ADAPTER
3 - PARK BRAKE ACTUATOR
4 - TRAILING PARK BRAKE SHOE
5 - ALLEN WRENCH

(28) Remove the trailing park brake shoe from the adapter.

(29) Remove the park brake shoe actuator from the adapter and inspect for signs of abnormal wear and binding at the pivot point.

INSTALLATION

(1) Install park brake shoe actuator into adapter.

(2) Install the trailing brake shoe on the adapter.

NOTE: When the hold down pin is installed, the long part of the hold down pin is to be positioned strait up and down. This will ensure that the hold down pin is correctly engaged with the adapter.

(3) Install the hold down spring and pin (Fig. 148) on the trailing park brake shoe.

(4) Install the upper return springs (Fig. 147) on the trailing park brake shoe.

(5) Install the upper return springs on the leading park brake shoe (Fig. 146). Then position the top of the leading park brake shoe at the upper anchor and rotate the bottom of the shoe outward until correctly installed on the adapter.

(6) Install the adjuster (Fig. 145) between the leading and trailing park brake shoe.

NOTE: When the hold down pin is installed, the long part of the hold down pin is to be positioned strait up and down. This will ensure that the hold down pin is correctly engaged with the adapter.

(7) Install the hold down spring and pin (Fig. 144) on the leading park brake shoe.

(8) Install the lower return spring (Fig. 143) on the leading and trailing park brake shoes.**When installing the return spring, it is to be installed behind the park brake shoes (Fig. 143).**

(9) Install the 4 mounting bolts for the adapter and hub/bearing into the bolt holes in the axle.

(10) Position the adapter on the 4 mounting bolts installed in the rear axle (Fig. 149).

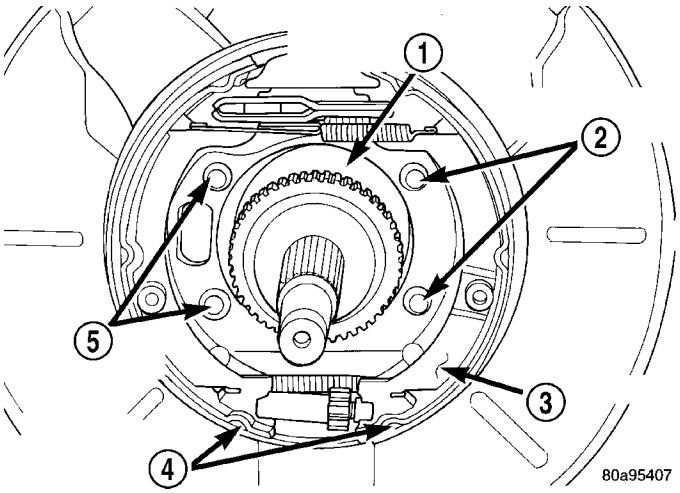

Fig. 149 Adapter Installed On Mounting Bolts (AWD Shown)

1 - DRIVESHAFT OUTER C/V JOINT
2 - MOUNTING BOLTS
3 - ADAPTER
4 - PARK BRAKE SHOES
5 - MOUNTING BOLTS

(11) Install the hub/bearing on the stub shaft of outer C/V joint (AWD only) and into the end of the axle. (Fig. 140).

(12) In a progressive crisscross pattern, tighten the 4 hub/bearing mounting bolts until the hub/bearing is squarely seated against the axle. Then tighten the hub/bearing mounting bolts to a torque of 129 N·m (95 ft. lbs.).

(13) AWD only - Install the wheel speed sensor on the hub/bearing and adapter. Install the wheel speed sensor attaching bolt (Fig. 137). Tighten the wheel speed sensor attaching bolt to a torque of 12 N·m (105 in. lbs).

(14) FWD only - Install the wheel speed sensor in the following fashion:

(a) If metal wheel speed sensor retaining clip is not in the neutral installed position on hub and bearing cap, install from the bottom, if necessary, and push clip upward until it snaps into position.

(b) Install wheel speed sensor head into rear of hub and bearing aligning index tab with the notch in the top of the mounting hole. Push the sensor in

SHOES - PARKING BRAKE (Continued)

until it snaps into place on the metal retaining clip.

(c) Install secondary (yellow) retaining clip over wheel speed sensor head and engage the tabs on each side.

(15) Install the park brake cable into its mounting hole in the adapter. **Be sure all the locking tabs on the park brake cable retainer are expanded out to ensure the cable will not pull out of the adapter.**

(16) Install the end of the park brake cable on the park brake actuator lever (Fig. 135).

(17) Attach park brake cable to adapter using mounting bolt.

(18) Remove the locking pliers (Fig. 131) from the front park brake cable.

(19) Adjust the park brake drum-in-hat brake shoes. (Refer to 5 - BRAKES/PARKING BRAKE/ SHOES - ADJUSTMENTS).

(20) Install the rotor on the hub/bearing.

(21) Carefully lower caliper and brake shoes over rotor and onto the adapter using the reverse procedure for removal (Fig. 133).

CAUTION: When installing guide pin bolts extreme caution should be taken not to crossthread the caliper guide pin bolts.

(22) Install the caliper guide pin bolts (Fig. 132). Tighten the guide pin bolts to a torque of 35 N·m (26 ft. lbs.).

(23) AWD only - Clean all foreign material off the threads of the outer C/V joint stub shaft. Install the washer and hub nut (Fig. 130) on the stub shaft of the outer C/V joint.

(24) AWD only - Set the parking brake.

(25) AWD only - Tighten the hub nut to a torque of 244 N·m (180 ft. lbs.).

(26) AWD only - Install the spring washer (Fig. 129) on the stub shaft of the outer C/V joint.

(27) AWD only - Install the nut retainer and cotter pin (Fig. 128) on the stub shaft of the outer C/V joint.

(28) Install the wheel and tire assembly. Tighten the wheel mounting stud nuts in proper sequence until all nuts are torqued to half specification. Then repeat the tightening sequence to the full specified torque of 135 N·m (100 ft. lbs.).

(29) Lower vehicle.

(30) Fully apply and release the park brake pedal one time. This will seat and correctly adjust the park brake cables.

CAUTION: Before moving vehicle, pump the brake pedal several times to insure the vehicle has a firm brake pedal to adequately stop vehicle.

(31) Road test the vehicle and make several stops to wear off any foreign material on the brakes and to seat the brake shoe linings.

ADJUSTMENTS

ADJUSTMENT - PARKING BRAKE SHOES

CAUTION: Before adjusting the park brake shoes be sure that the park brake pedal is in the fully released position. If park brake pedal is not in the fully released position, the park brake shoes can not be accurately adjusted.

(1) Raise vehicle.

(2) Remove tire and wheel.

(3) Remove disc brake caliper from caliper adapter (Fig. 150). (Refer to 5 - BRAKES/HYDRAULIC/MECHANICAL/DISC BRAKE CALIPERS - REMOVAL).

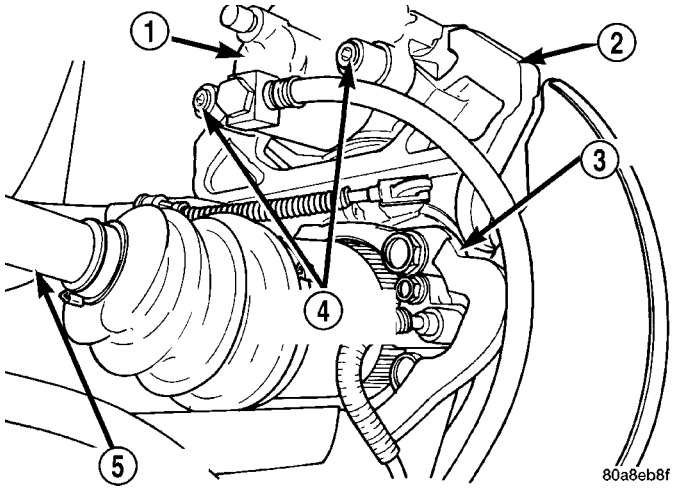

Fig. 150 Disc Brake Caliper

1 - DISC BRAKE CALIPER
2 - ADAPTER
3 - AXLE
4 - GUIDE PIN BOLTS
5 - DRIVESHAFT (AWD MODELS ONLY)

(4) Remove rotor from hub/bearing.

NOTE: When measuring the brake drum diameter, the diameter should be measured in the center of the area in which the park brake shoes contact the surface of the brake drum.

SHOES - PARKING BRAKE (Continued)

(5) Using Brake Shoe Gauge, Special Tool C-3919, or equivalent, **accurately** measure the inside diameter of the park brake drum portion of the rotor (Fig. 151).

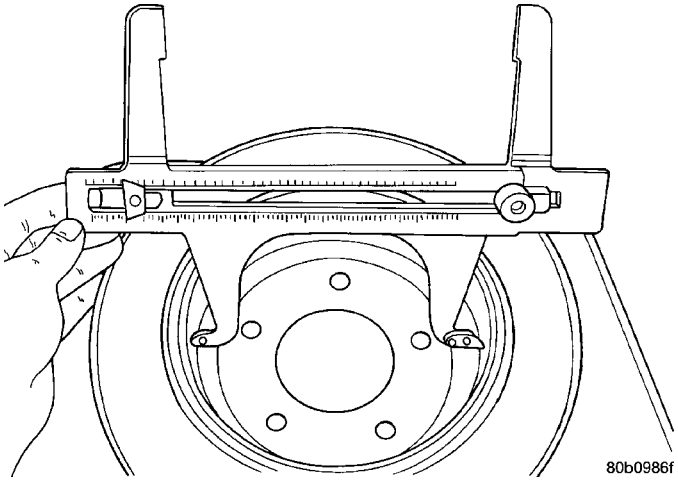

Fig. 151 Measuring Park Brake Drum Diameter

(6) Using a ruler that reads in 64th of an inch, accurately read the measurement of the inside diameter of the park brake drum from the special tool (Fig. 152).

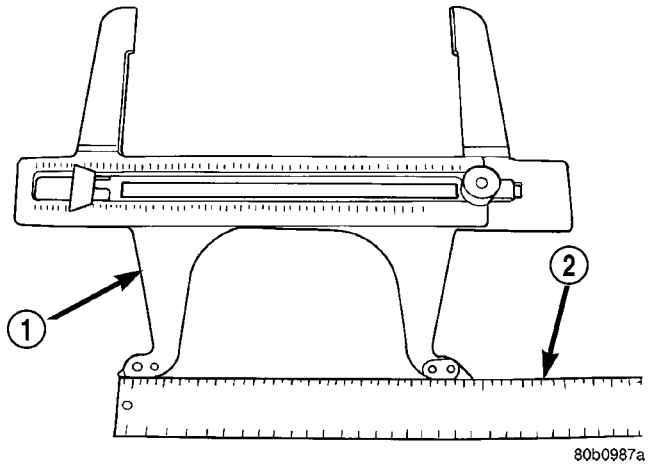

Fig. 152 Reading Park Brake Drum Diameter

1 - SPECIAL TOOL C-3919
2 - RULER

(7) Reduce the inside diameter measurement of the brake drum that was taken using Special Tool C-3919 by 1/64 of an inch. Reset Gauge, Brake Shoe, Special Tool C-3919 or the equivalent used, so that the outside measurement jaws are set to the reduced measurement (Fig. 153).

(8) Place Gauge, Brake Shoe, Special Tool C-3919, or equivalent over the park brake shoes. The special tool must be located diagonally across at the top of one shoe and bottom of opposite shoe (widest point) of the park brake shoes.

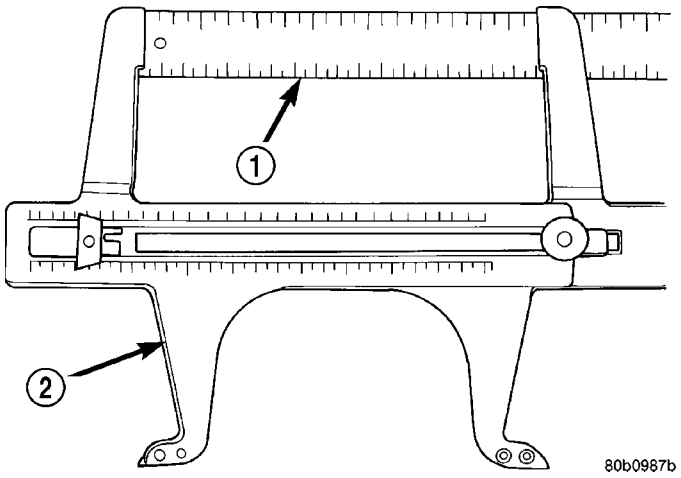

Fig. 153 Setting Gauge To Park Brake Shoe Measurement

1 - RULER
2 - SPECIAL TOOL C-3919

(9) Using the star wheel adjuster, adjust the park brake shoes until the lining on the park brake shoes just touches the jaws on the special tool.

(10) Repeat step 8 above and measure shoes in both directions.

(11) Install brake rotor on hub and bearing.

(12) Rotate rotor to verify that the park brake shoes are not dragging on the brake drum. If park brake shoes are dragging, remove rotor and back off star wheel adjuster one notch and recheck for brake shoe drag against drum. Continue with the previous step until brake shoes are not dragging on brake drum.

(13) Install disc brake caliper on caliper adapter (Fig. 150). (Refer to 5 - BRAKES/HYDRAULIC/MECHANICAL/DISC BRAKE CALIPERS - INSTALLATION).

(14) Install wheel and tire.

(15) Tighten the wheel mounting nuts in the proper sequence until all nuts are torqued to half the specified torque. Then repeat the tightening sequence to the full specified torque of 135 N·m (100 ft. lbs.).

(16) Lower vehicle.

(17) Apply and release the park brake pedal one time. This will seat and correctly adjust the park brake cables.

CAUTION: Before moving vehicle, pump brake pedal several times to ensure the vehicle has a firm enough pedal to stop the vehicle.

(18) Road test the vehicle to ensure proper function of the vehicle's brake system.

BRAKES - ABS

TABLE OF CONTENTS

page

BRAKES - ABS
DESCRIPTION
DESCRIPTION - ANTILOCK BRAKE SYSTEM . . . 87
DESCRIPTION - ANTILOCK BRAKE SYSTEM (EXPORT) . . . 87
DESCRIPTION - ELECTRONIC VARIABLE BRAKE PROPORTIONING . . . 88
DESCRIPTION - TRACTION CONTROL SYSTEM . . . 88
OPERATION
OPERATION - ANTILOCK BRAKE SYSTEM . . 88
OPERATION - ELECTRONIC VARIABLE BRAKE PROPORTIONING . . . 89
OPERATION - TRACTION CONTROL SYSTEM . . . 89
CAUTION . . . 90
STANDARD PROCEDURE - ANTILOCK BRAKE SYSTEM BLEEDING . . . 90
SPECIFICATIONS
ABS FASTENER TORQUE . . . 91
TONE WHEEL RUNOUT . . . 91
WHEEL SPEED SENSOR AIR GAP . . . 91
FRONT WHEEL SPEED SENSOR
REMOVAL . . . 91
INSTALLATION . . . 92
REAR WHEEL SPEED SENSOR - AWD
REMOVAL . . . 92

page

INSTALLATION . . . 92
REAR WHEEL SPEED SENSOR - FWD
REMOVAL . . . 93
INSTALLATION . . . 93
TONE WHEEL
INSPECTION - TONE WHEEL . . . 94
TRACTION CONTROL SWITCH
DIAGNOSIS AND TESTING - TRACTION CONTROL SWITCH . . . 94
REMOVAL . . . 95
INSTALLATION . . . 95
HYDRAULIC/MECHANICAL
OPERATION - HYDRAULIC CIRCUITS AND VALVES . . . 95
HCU (HYDRAULIC CONTROL UNIT)
DESCRIPTION . . . 100
OPERATION . . . 101
ICU (INTEGRATED CONTROL UNIT)
DESCRIPTION . . . 102
OPERATION . . . 102
REMOVAL
REMOVAL - LHD . . . 102
REMOVAL - RHD . . . 104
DISASSEMBLY - ICU . . . 105
ASSEMBLY - ICU . . . 106
INSTALLATION
INSTALLATION - LHD . . . 106
INSTALLATION - RHD . . . 107

BRAKES - ABS

DESCRIPTION

DESCRIPTION - ANTILOCK BRAKE SYSTEM

This section covers the physical and operational descriptions and the on-car service procedures for the Mark 20e Antilock Brake System and the Mark 20e Antilock Brake System with traction control.

The purpose of the antilock brake system (ABS) is to prevent wheel lockup under braking conditions on virtually any type of road surface. Antilock braking is desirable because a vehicle that is stopped without locking the wheels retains directional stability and some steering capability. This allows the driver to retain greater control of the vehicle during braking.

DESCRIPTION - ANTILOCK BRAKE SYSTEM (EXPORT)

Four-wheel disc antilock brakes are standard on all models. The Mark 20e antilock brake system is used on all models. Depending on whether the vehicle is a left-hand drive (LHD) or right-hand drive (RHD) model, the integrated control unit (ICU) is located in one of two locations. On LHD models, the ICU is mounted above the front suspension cradle/crossmember below the master cylinder. On RHD models, the ICU is located behind the front suspension cradle/crossmember on the left side of the vehicle.

BRAKES - ABS (Continued)

DESCRIPTION - ELECTRONIC VARIABLE BRAKE PROPORTIONING

Vehicles equipped with ABS use electronic variable brake proportioning (EVBP) to balance front-to-rear braking. The EVBP is used in place of a rear proportioning valve. The EVBP system uses the ABS system to control the slip of the rear wheels in partial braking range. The braking force of the rear wheels is controlled electronically by using the inlet and outlet valves located in the integrated control unit (ICU).

EVBP activation is invisible to the customer since there is no pump motor noise or brake pedal feedback.

DESCRIPTION - TRACTION CONTROL SYSTEM

Traction control reduces wheel slip and maintains traction at the driving wheels at speeds below 56 km/h (35 mph) when road surfaces are slippery. The traction control system reduces wheel slip by braking the wheel that is losing traction.

HYDRAULIC SHUTTLE VALVES

Two pressure relief hydraulic shuttle valves are included on vehicles with traction control. These valves are located inside the HCU and cannot be serviced separately from the HCU.

TRACTION CONTROL LAMP

The traction control function lamp is located in the transmission range indicator display of the instrument cluster, displaying TRAC, TRAC OFF or neither depending on system mode.

The TRAC OFF lamp is controlled by a Traction Control Off switch that is a momentary contact type switch. The Traction Control Off switch is located on the steering column upper shroud.

OPERATION

OPERATION - ANTILOCK BRAKE SYSTEM

There are a few performance characteristics of the Mark 20e Antilock Brake System that may at first seem abnormal, but in fact are normal. These characteristics are described below.

NORMAL BRAKING

Under normal braking conditions, the ABS functions the same as a standard base brake system with a diagonally split master cylinder and conventional vacuum assist.

ABS BRAKING

ABS operation is available at all vehicle speeds above 3–5 mph. If a wheel locking tendency is detected during a brake application, the brake system enters the ABS mode. During ABS braking, hydraulic pressure in the four wheel circuits is modulated to prevent any wheel from locking. Each wheel circuit is designed with a set of electric solenoids to allow modulation, although for vehicle stability, both rear wheel solenoids receive the same electrical signal. Wheel lockup may be perceived at the very end of an ABS stop and is considered normal.

During an ABS stop, the brakes hydraulic system is still diagonally split. However, the brake system pressure is further split into three control channels. During antilock operation of the vehicle's brake system, the front wheels are controlled independently and are on two separate control channels, and the rear wheels of the vehicle are controlled together.

The system can build and release pressure at each wheel, depending on signals generated by the wheel speed sensors (WSS) at each wheel and received at the controller antilock brake (CAB).

NOISE AND BRAKE PEDAL FEEL

During ABS braking, some brake pedal movement may be felt. In addition, ABS braking will create ticking, popping, or groaning noises heard by the driver. This is normal and is due to pressurized fluid being transferred between the master cylinder and the brakes. If ABS operation occurs during hard braking, some pulsation may be felt in the vehicle body due to fore and aft movement of the suspension as brake pressures are modulated.

At the end of an ABS stop, ABS is turned off when the vehicle is slowed to a speed of 3–4 mph. There may be a slight brake pedal drop anytime that the ABS is deactivated, such as at the end of the stop when the vehicle speed is less than 3 mph or during an ABS stop where ABS is no longer required. These conditions exist when a vehicle is being stopped on a road surface with patches of ice, loose gravel, or sand on it. Also, stopping a vehicle on a bumpy road surface activates ABS because of the wheel hop caused by the bumps.

TIRE NOISE AND MARKS

Although the ABS system prevents complete wheel lockup, some wheel slip is desired in order to achieve optimum braking performance. Wheel slip is defined as follows: 0 percent slip means the wheel is rolling freely and 100 percent slip means the wheel is fully locked. During brake pressure modulation, wheel slip is allowed to reach up to 25–30 percent. This means that the wheel rolling velocity is 25–30 percent less than that of a free rolling wheel at a given vehicle speed. This slip may result in some tire chirping, depending on the road surface. This sound should not be interpreted as total wheel lockup.

Complete wheel lockup normally leaves black tire marks on dry pavement. The ABS will not leave dark black tire marks since the wheel never reaches a fully locked condition. However, tire marks may be noticeable as light patched marks.

START-UP CYCLE

When the ignition is turned on, a popping sound and a slight brake pedal movement may be noticed. The ABS warning lamp will also be on for up to 5 seconds after the ignition is turned on. When the vehicle is first driven off, a humming may be heard or felt by the driver at approximately 20–40 kph (12–25 mph). All of these conditions are a normal function of ABS as the system is performing a diagnosis check.

PREMATURE ABS CYCLING

Symptoms of premature ABS cycling include: clicking sounds from the solenoid valves; pump/motor running; and pulsations in the brake pedal. Premature ABS cycling can occur at any braking rate of the vehicle and on any type of road surface. Neither the red BRAKE warning lamp, nor the amber ABS warning lamp, illuminate and no fault codes are stored in the CAB.

Premature ABS cycling is a condition that needs to be correctly assessed when diagnosing problems with the antilock brake system. It may be necessary to use a DRB scan tool to detect and verify premature ABS cycling.

Check the following common causes when diagnosing premature ABS cycling: damaged tone wheels; incorrect tone wheels; damaged steering knuckle wheel speed sensor mounting bosses; loose wheel speed sensor mounting bolts; excessive tone wheel runout; or an excessively large tone wheel-to-wheel speed sensor air gap. Give special attention to these components when diagnosing a vehicle exhibiting premature ABS cycling.

After diagnosing the defective component, repair or replace it as required. When the component repair or replacement is completed, test drive the vehicle to verify that premature ABS cycling has been corrected.

OPERATION - ELECTRONIC VARIABLE BRAKE PROPORTIONING

Upon entry into EVBP the inlet valve for the rear brake circuit is switched on so that the fluid supply from the master cylinder is shut off. In order to decrease the rear brake pressure, the outlet valve for the rear brake circuit is pulsed. This allows fluid to enter the low pressure accumulator (LPA) in the hydraulic control unit (HCU) resulting in a drop in fluid pressure to the rear brakes. In order to increase the rear brake pressure, the outlet valve is switched off and the inlet valve is pulsed. This increases the pressure to the rear brakes. This back-and-forth process will continue until the required slip difference is obtained. At the end of EVBP braking (brakes released) the fluid in the LPA drains back to the master cylinder by switching on the outlet valve and draining through the inlet valve check valve. At the same time the inlet valve is switched on in case of another brake application.

The EVBP will remain functional during many ABS fault modes. If both the red BRAKE and amber ABS warning indicators are illuminated, the EVBP may not be functioning.

OPERATION - TRACTION CONTROL SYSTEM

The traction control module monitors wheel speed. During acceleration, if the module detects front (drive) wheel slip and the brakes are not applied, the module enters traction control mode. Traction control operation proceeds in the following order:

(1) Close the normally open isolation valves.

(2) Start the pump/motor and supply volume and pressure to the front (drive) hydraulic circuit. (The pump/motor runs continuously during traction control operation.)

(3) Open and close the build and decay valves to maintain minimum wheel slip and maximum traction.

The cycling of the build and decay valves during traction control is similar to that during antilock braking, except the valves work to control wheel spin by applying the brakes, whereas the ABS function is to control wheel skid by releasing the brakes.

If the brakes are applied at anytime during a traction control cycle, the brake lamp switch triggers the controller to switch off traction control.

HYDRAULIC SHUTTLE VALVES

Two pressure relief hydraulic shuttle valves allow pressure and volume to return to the master cylinder reservoir when not consumed by the build and decay valves. These valves are necessary because the pump/motor supplies more volume than the system requires.

TRACTION CONTROL LAMP

The traction control system is enabled at each ignition cycle. It may be turned off by depressing the Traction Control Off switch button when the ignition is in the ON position. The traction control function lamp (TRAC OFF) illuminates immediately upon depressing the button.

The traction control function lamp illuminates during a traction control cycle, displaying TRAC.

If the CAB calculates that the brake temperatures are high, the traction control system becomes inoperative until a time-out period has elapsed. During this “thermo-protection mode,” the traction control function lamp illuminates TRAC OFF; note that no trouble code is registered.

CAUTION

The ABS uses an electronic control module, the CAB. This module is designed to withstand normal current draws associated with vehicle operation. Care must be taken to avoid overloading the CAB circuits.

CAUTION: In testing for open or short circuits, do not ground or apply voltage to any of the circuits unless instructed to do so for a diagnostic procedure.

CAUTION: These circuits should only be tested using a high impedance multi-meter or the DRBIII® scan tool as described in this section. Power should never be removed or applied to any control module with the ignition in the ON position. Before removing or connecting battery cables, fuses, or connectors, always turn the ignition to the OFF position.

CAUTION: The CAB 24-way connector should never be connected or disconnected with the ignition switch in the ON position.

CAUTION: This vehicle utilizes active wheel speed sensors. Do not apply voltage to wheel speed sensors at any time.

CAUTION: Use only factory wiring harnesses. Do not cut or splice wiring to the brake circuits. The addition of aftermarket electrical equipment (car phone, radar detector, citizen band radio, trailer lighting, trailer brakes, etc.) on a vehicle equipped with antilock brakes may affect the function of the antilock brake system.

CAUTION: When performing any service procedure on a vehicle equipped with ABS, do not apply a 12-volt power source to the ground circuit of the pump motor in the HCU. Doing this will damage the pump motor and will require replacement of the entire HCU.

CAUTION: An attempt to remove or disconnect certain system components may result in improper system operation. Only those components with approved removal and installation procedures in this manual should be serviced.

CAUTION: If welding work is to be performed on the vehicle using an electric arc welder, the CAB connector should be disconnected during the welding operation.

CAUTION: Many components of the ABS System are not serviceable and must be replaced as an assembly. Do not disassemble any component which is not designed to be serviced.

CAUTION: Only the recommended jacking or hoisting positions for this vehicle are to be used whenever it is necessary to lift a vehicle. Failure to raise a vehicle from the recommended locations could result in lifting a vehicle by the hydraulic control unit mounting bracket. Lifting a vehicle by the hydraulic control unit mounting bracket will result in damage to the mounting bracket and the hydraulic control unit.

CAUTION: Brake fluid will damage painted surfaces. If brake fluid is spilled on any painted surface, wash off with water immediately.

STANDARD PROCEDURE - ANTILOCK BRAKE SYSTEM BLEEDING

The base brake's hydraulic system must be bled anytime air enters the hydraulic system. The ABS though, particularly the ICU (HCU), should only be bled when the HCU is replaced or removed from the vehicle. The ABS must always be bled anytime it is suspected that the HCU has ingested air. Under most circumstances that require the bleeding of the brakes hydraulic system, only the base brake hydraulic system needs to be bled.

It is important to note that excessive air in the brake system will cause a soft or spongy feeling brake pedal.

During the brake bleeding procedure, be sure the brake fluid level remains close to the FULL level in the master cylinder fluid reservoir. Check the fluid level periodically during the bleeding procedure and add DOT 3 brake fluid as required.

The ABS must be bled as two independent braking systems. The non-ABS portion of the brake system with ABS is to be bled the same as any non-ABS system.

The ABS portion of the brake system must be bled separately. Use the following procedure to properly bleed the brake hydraulic system including the ABS.

BLEEDING

When bleeding the ABS system, the following bleeding sequence must be followed to insure complete and adequate bleeding.

BRAKES - ABS (Continued)

(1) Make sure all hydraulic fluid lines are installed and properly torqued.

(2) Connect the DRBIII® scan tool to the diagnostics connector. The diagnostic connector is located under the lower steering column cover to the left of the steering column.

(3) Using the DRB, check to make sure the CAB does not have any fault codes stored. If it does, clear them using the DRB.

WARNING: WHEN BLEEDING THE BRAKE SYSTEM WEAR SAFETY GLASSES. A CLEAR BLEED TUBE MUST BE ATTACHED TO THE BLEEDER SCREWS AND SUBMERGED IN A CLEAR CONTAINER FILLED PART WAY WITH CLEAN BRAKE FLUID. DIRECT THE FLOW OF BRAKE FLUID AWAY FROM YOURSELF AND THE PAINTED SURFACES OF THE VEHICLE. BRAKE FLUID AT HIGH PRESSURE MAY COME OUT OF THE BLEEDER SCREWS WHEN OPENED.

(4) Bleed the base brake system using the standard pressure or manual bleeding procedure. (Refer to 5 - BRAKES - BASE - STANDARD PROCEDURE)

(5) Using the DRB, select ANTILOCK BRAKES, followed by MISCELLANEOUS, then BLEED BRAKES. Follow the instructions displayed. When the scan tool displays TEST COMPLETED, disconnect the scan tool and proceed.

(6) Bleed the base brake system a second time. Check brake fluid level in the reservoir periodically to prevent emptying, causing air to enter the hydraulic system.

(7) Fill the master cylinder reservoir to the full level.

(8) Test drive the vehicle to be sure the brakes are operating correctly and that the brake pedal does not feel spongy.

SPECIFICATIONS

ABS FASTENER TORQUE

Refer to BRAKE FASTENER TORQUE. (Refer to 5 - BRAKES - BASE - SPECIFICATIONS)

TONE WHEEL RUNOUT

DESCRIPTION	SPECIFICATION
Front Tone Wheel Maximum Runout	0.15 mm (0.006 in.)
Rear Tone Wheel Maximum Runout	0.15 mm (0.006 in.)

WHEEL SPEED SENSOR AIR GAP

DESCRIPTION	SPECIFICATION
Front Sensor	0.35 – 1.20 mm 0.014 – 0.047 in.
Rear Sensor	0.40 – 1.20 mm 0.016 – 0.047 in.

FRONT WHEEL SPEED SENSOR

REMOVAL

(1) Raise vehicle. (Refer to LUBRICATION & MAINTENANCE/HOISTING - STANDARD PROCEDURE)

(2) Remove the tire and wheel assembly.

(3) Remove the sensor cable routing clamp screws.

CAUTION: When disconnecting the wheel speed sensor from vehicle wiring harness, be careful not to damage pins on connector

(4) Remove speed sensor cable grommets from intermediate bracket on strut.

(5) Disconnect speed sensor cable from vehicle wiring harness behind fender well shield.

(6) Remove the wheel speed sensor head mounting bolt (Fig. 1).

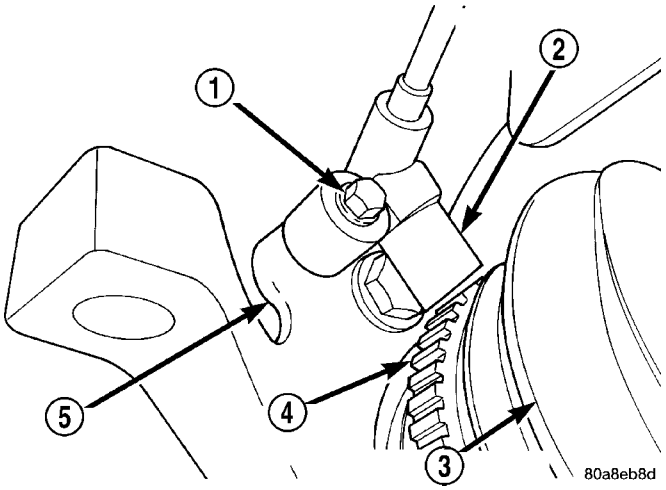

Fig. 1 Front Wheel Speed Sensor Attaching Bolt

1 - MOUNTING BOLT
2 - WHEEL SPEED SENSOR
3 - DRIVESHAFT
4 - TONE WHEEL
5 - STEERING KNUCKLE

(7) Remove sensor head from steering knuckle. If sensor has seized due to corrosion, **DO NOT USE PLIERS ON SENSOR HEAD.** Use a hammer and a punch and tap edge of sensor ear, rocking the sensor side-to-side until free.

FRONT WHEEL SPEED SENSOR (Continued)

(8) Remove front wheel speed sensor from vehicle.

INSTALLATION

CAUTION: Proper installation of wheel speed sensor cables is critical to continued system operation. Be sure that cables are installed in retainers. Failure to install cables in retainers as shown in this section may result in contact with moving parts and over extension of cables, resulting in an open circuit.

(1) Connect the front wheel speed sensor cable to the vehicle wiring harness connector. Be sure speed sensor cable connector is fully seated and locked into vehicle wiring harness connector.
(2) Install the bolts attaching the routing clamps to the body of the vehicle. Tighten the bolts to a torque of 14 N·m (125 in. lbs.).
(3) Insert speed sensor cable grommets into intermediate bracket on strut.
(4) Install the wheel speed sensor head mounting bolt (Fig. 1). Tighten the bolt to a torque of 13 N·m (115 in. lbs.)
(5) Install the wheel and tire assembly on vehicle.
(6) Lower vehicle.
(7) Road test vehicle to ensure proper operation of the base and ABS brake systems.

REAR WHEEL SPEED SENSOR - AWD

REMOVAL

(1) Raise vehicle. (Refer to LUBRICATION & MAINTENANCE/HOISTING - STANDARD PROCEDURE)

CAUTION: When disconnecting speed sensor cable from vehicle wiring harness be careful not to damage pins on the electrical connectors. Also, inspect connectors for any signs of previous damage.

(2) Remove grommet from floor pan of vehicle and disconnect speed sensor cable connector from vehicle wiring harness.

CAUTION: When removing rear wheel speed sensor cable from routing clips, be sure not to damage the routing clips. Routing clips that are molded onto the brake hose will require replacement of the brake hose if damaged during removal or installation of the speed sensor cable.

(3) Carefully remove speed sensor cable from press-in routing clips along brake hose and tubing.

(4) Remove bolt securing wheel speed sensor cable metal clip to rear of axle. Remove metal clip from cable if necessary.

CAUTION: If speed sensor head has seized due to corrosion, do not use pliers on speed sensor head in an attempt to remove it. Use a hammer and a punch and tap mounting flange edge side-to-side, rocking the sensor until free.

(5) Remove wheel speed sensor head attaching bolt.
(6) Remove wheel speed sensor head from the axle, and remove sensor from vehicle.

INSTALLATION

CAUTION: Proper installation of wheel speed sensor cables is critical to continued system operation. Be sure that cables are installed in retainers. Failure to install cables in retainers as indicated may result in contact with moving parts or over-extension of cables, resulting in an open circuit.

(1) Install wheel speed sensor head in axle flange.

CAUTION: Prior to installing the speed sensor head attaching bolt, the plastic anti-rotation pin must be fully seated into the bearing flange.

(2) Install wheel speed sensor head attaching bolt. Tighten bolt to a torque 10 N·m (90 in. lbs.).
(3) Check the air gap between the face of the wheel speed sensor and the top surface of the tone wheel. (Refer to 5 - BRAKES - SPECIFICATIONS)

CAUTION: When installing wheel speed sensor cable in the routing clips on rear brake flex hose, be sure not to damage the routing clips. Routing clips are molded onto the hose and will require replacement of the brake hose if damaged.

(4) Install speed sensor cable under leaf spring onto brake hose and tubing utilizing routing clips to secure it in place.
(5) Install metal routing clip on speed sensor cable and mount it to rear of axle with mounting bolt. Tighten mounting bolt to 16 N·m (140 in. lbs.).
(6) Connect wheel speed sensor cable to vehicle wiring harness.**Be sure speed sensor cable connector is fully seated and locked into vehicle wiring harness connector.**
(7) Install speed sensor cable grommet into the floor pan, being sure the grommet is fully seated into the access hole.
(8) Lower vehicle.
(9) Road test vehicle to ensure proper operation of the base and ABS braking systems.

REAR WHEEL SPEED SENSOR - FWD

REMOVAL

(1) Raise vehicle. (Refer to LUBRICATION & MAINTENANCE/HOISTING - STANDARD PROCEDURE)

CAUTION: When disconnecting speed sensor cable from vehicle wiring harness be careful not to damage pins on the electrical connectors. Also, inspect connectors for any signs of previous damage.

(2) Remove grommet from floor pan of vehicle and disconnect speed sensor cable connector from vehicle wiring harness (Fig. 2).

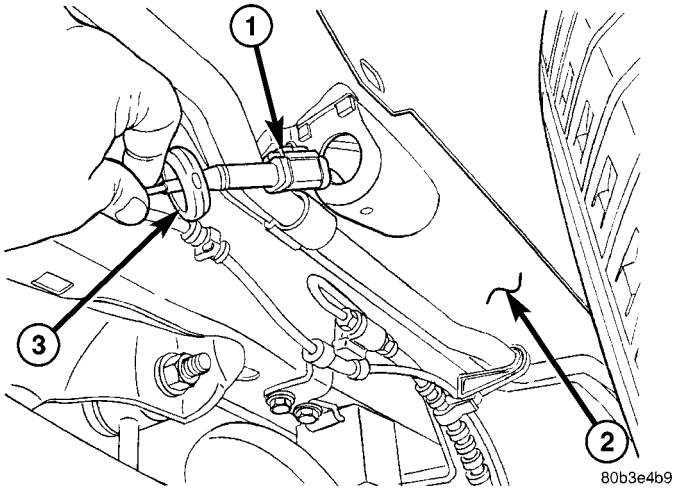

Fig. 2 Wheel Speed Sensor Connector

1 - CONNECTOR
2 - FLOOR PAN
3 - GROMMET

CAUTION: When removing rear wheel speed sensor cable from routing clips, be sure not to damage the routing clips. Routing clips that are molded onto the brake hose will require replacement of the brake hose if damaged during removal or installation of the speed sensor cable.

(3) Carefully remove speed sensor cable from press-in routing clips (Fig. 3).

(4) Remove bolt securing metal routing clip to rear of axle and remove sensor cable from metal clip (Fig. 3).

(5) Remove secondary (yellow) retaining clip at rear of wheel speed sensor head (Fig. 4).

(6) Push up on metal retaining clip (Fig. 4) until it bottoms. This will release wheel speed sensor head from hub and bearing. While holding metal clip up, pull back on wheel speed sensor head removing it from hub and bearing.

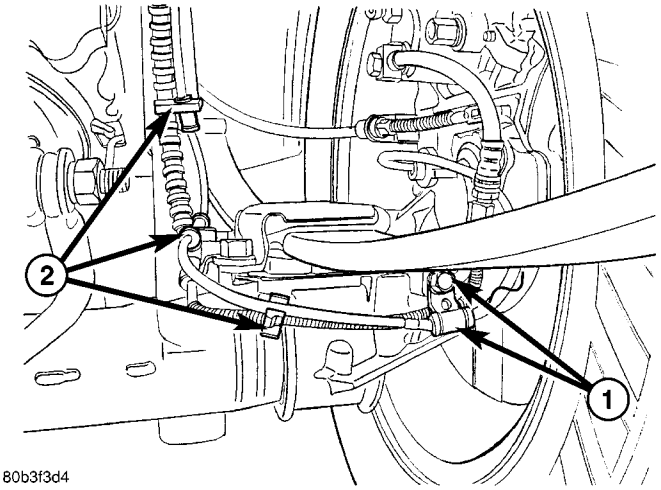

Fig. 3 SPEED SENSOR CABLE ROUTING

1 - METAL CLIP AND MOUNTING BOLT
2 - ROUTING CLIPS

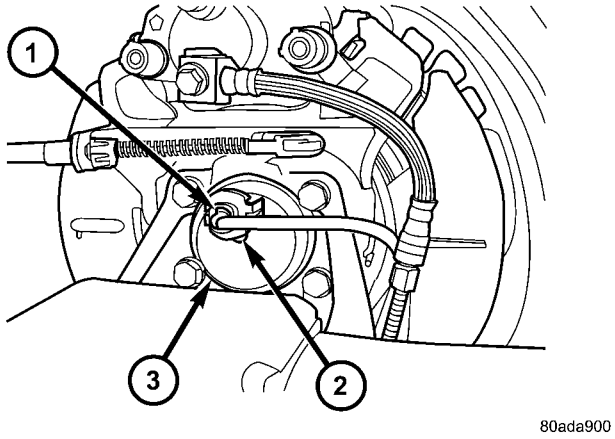

Fig. 4 SENSOR CONNECTION AT HUB AND BEARING

1 - SECONDARY SENSOR RETAINING CLIP
2 - METAL SENSOR RETAINING CLIP
3 - HUB AND BEARING

(7) Remove wheel speed sensor assembly from vehicle.

INSTALLATION

CAUTION: Proper installation of wheel speed sensor cable is critical to continued system operation. Be sure that cable is installed in routing retainers/ clips. Failure to install cable in retainers may result in contact with moving parts or over extension of cable, resulting in an open circuit.

CAUTION: It is important that only Mopar®Wheel Bearing Grease be used for the following step application. Other lubricants may cause sensor failure.

(1) Lubricate the sensor O-ring with Mopar Wheel Bearing Grease before installation into the Hub And Bearing. **If not lubricated, an improper seal may result due to rolling of the O-ring.**

(2) If metal sensor retaining clip is not in the neutral installed position on hub and bearing cap, install from the bottom, if necessary, and push clip upward until it snaps into position.

(3) Install wheel speed sensor head into rear of hub and bearing aligning index tab with the notch in the top of the mounting hole. Push the sensor in until it snaps into place on the metal retaining clip.

(4) Install secondary (yellow) retaining clip over wheel speed sensor head and engage the tabs on each side.

(5) Route sensor cable under leaf spring along rear of axle. Install speed sensor cable into routing clips on rear brake flex hose (Fig. 3).

(6) Install cable into metal routing clip and attach it to the rear axle with mounting bolt (Fig. 3). Tighten mounting bolt to 16 N·m (140 in. lbs.).

(7) Connect wheel speed sensor cable to vehicle wiring harness (Fig. 2). **Be sure speed sensor cable connector is fully seated and locked into vehicle wiring harness connector.**

(8) Install speed sensor cable grommet into hole in floor pan making sure grommet is fully seated into hole.

(9) Lower vehicle.

(10) Road test vehicle to ensure proper operation of the base and ABS braking systems.

TONE WHEEL

INSPECTION - TONE WHEEL

NOTE: Rear tone wheels for front-wheel-drive vehicles are sealed within the hub and bearing assembly and cannot be inspected or replaced. Replacement of the hub and bearing is necessary.

Tone wheels can cause erratic wheel speed sensor signals. Inspect tone wheels for the following possible causes.

- missing, chipped, or broken teeth
- contact with the wheel speed sensor
- wheel speed sensor to tone wheel alignment
- wheel speed sensor to tone wheel clearance
- excessive tone wheel runout
- tone wheel loose on its mounting surface

If a front tone wheel is found to need replacement, the drive shaft must be replaced. No attempt should be made to replace just the tone wheel. (Refer to 3 - DIFFERENTIAL & DRIVELINE/HALF SHAFT - REMOVAL)

If a rear tone wheel is found to need replacement on an all-wheel-drive model, the drive shaft must be replaced. No attempt should be made to replace just the tone wheel. (Refer to 3 - DIFFERENTIAL & DRIVELINE/HALF SHAFT - REMOVAL)

If wheel speed sensor to tone wheel contact is evident, determine the cause and correct it before replacing the wheel speed sensor or tone wheel.

Check the gap between the speed sensor head and the tone wheel to ensure it is within specifications. (Refer to 5 - BRAKES - ABS/ELECTRICAL - SPECIFICATIONS)

Excessive wheel speed sensor runout can cause erratic wheel speed sensor signals. Refer to SPECIFICATIONS in this section of the service manual for the maximum allowed tone wheel runout (Refer to 5 - BRAKES - ABS/ELECTRICAL - SPECIFICATIONS). If tone wheel runout is excessive, determine if it is caused by a defect in the driveshaft assembly or hub and bearing. Replace as necessary.

Tone wheels are pressed onto their mounting surfaces and should not rotate independently from the mounting surface. Replacement of the front driveshaft, rear driveshaft (AWD only) or rear hub and bearing is necessary.

TRACTION CONTROL SWITCH

DIAGNOSIS AND TESTING - TRACTION CONTROL SWITCH

(1) Remove lower steering column shroud. (Refer to 19 - STEERING/COLUMN/LOWER SHROUD - REMOVAL)

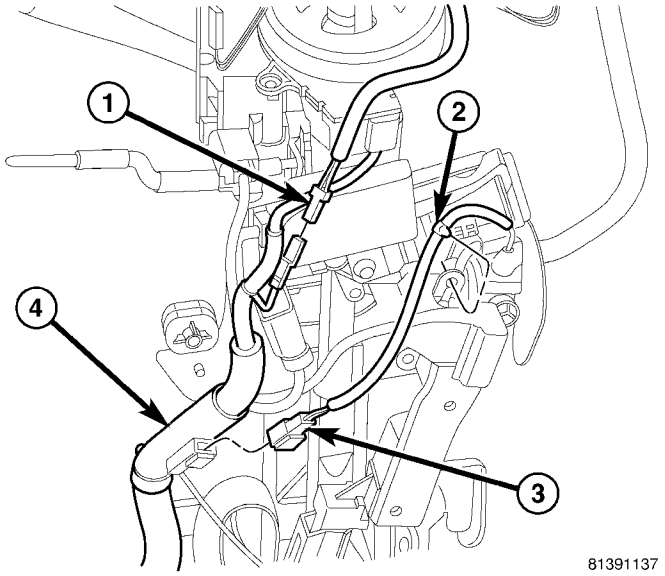

Fig. 5 Traction Control And Autostick Wiring Connections

1 - TRACTION CONTROL WIRING CONNECTOR
2 - ROUTING CLIP
3 - AUTOSTICK WIRING CONNECTOR
4 - COLUMN WIRING HARNESS

TRACTION CONTROL SWITCH (Continued)

(2) Disconnect traction control switch harness from column harness (Fig. 5).

(3) Using an ohmmeter, check for continuity between pins 1 and 2. With the switch actuated, there should be continuity between the two pins. With the switch off, there should be no continuity.

REMOVAL

The traction control switch is located in the upper shroud. (Refer to 19 - STEERING/COLUMN/UPPER SHROUD - REMOVAL)

INSTALLATION

The traction control switch is located in the upper shroud. (Refer to 19 - STEERING/COLUMN/UPPER SHROUD - INSTALLATION)

HYDRAULIC/MECHANICAL

OPERATION - HYDRAULIC CIRCUITS AND VALVES

The hydraulic fluid control valves control the flow of pressurized brake fluid to the wheel brakes during the different modes of ABS braking. The following paragraphs explain how this works. For purposes of explanation only, it is assumed that only the right front wheel is experiencing antilock braking; the following diagrams show only the right front wheel in an antilock braking operation.

NORMAL BRAKING HYDRAULIC CIRCUIT AND SOLENOID VALVE FUNCTION

The hydraulic diagram (Fig. 6) shows the vehicle in the normal braking mode of the base brake hydraulic system. The diagram shows no wheel spin or slip occurring relative to the speed of the vehicle. The driver is applying the brake pedal which builds pressure in the brake hydraulic system to engage the brakes and stop the vehicle.

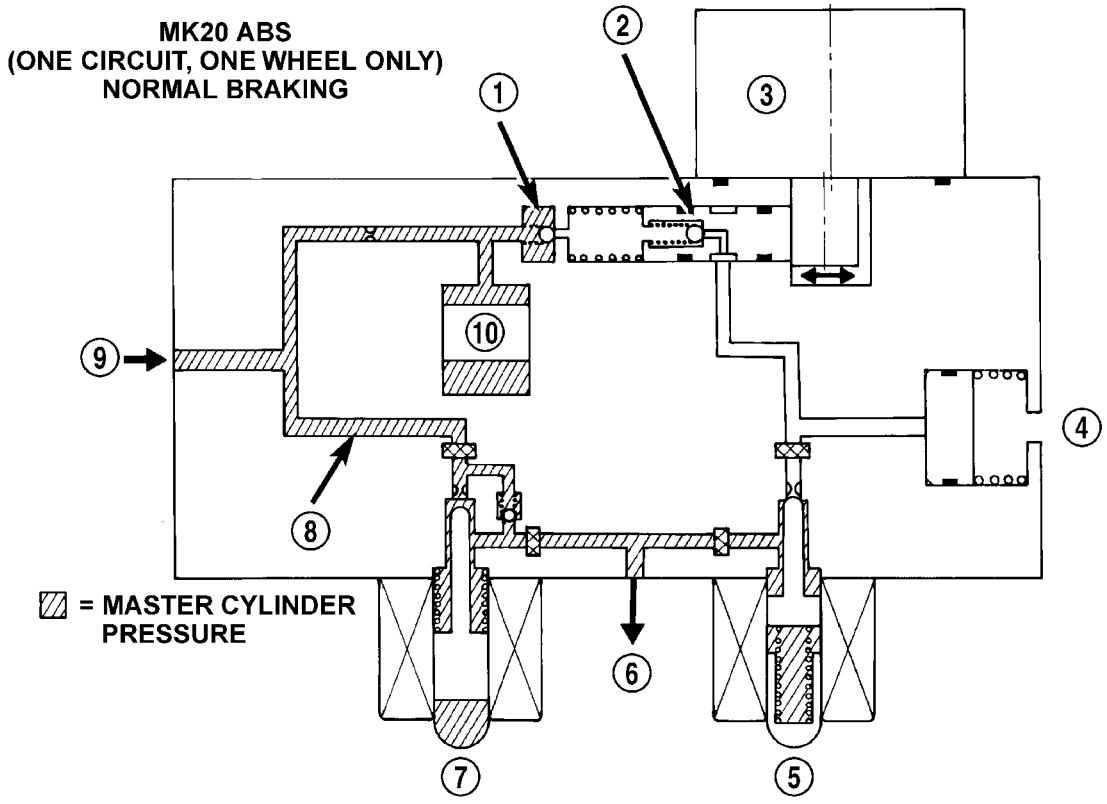

80a89435

Fig. 6 Normal Braking Hydraulic Circuit

1 - OUTLET VALVE
2 - PUMP PISTON
3 - PUMP MOTOR (OFF)
4 - LOW PRESSURE ACCUMULATOR
5 - NORMALLY CLOSED VALVE (OFF)
6 - TO RIGHT FRONT WHEEL
7 - NORMALLY OPEN VALVE (OFF)
8 - MASTER CYLINDER PRESSURE
9 - FROM MASTER CYLINDER
10 - NOISE DAMPER CHAMBER

HYDRAULIC/MECHANICAL (Continued)

ABS PRIMARY HYDRAULIC CIRCUIT AND SOLENOID VALVE FUNCTION (ABS WITHOUT TRACTION CONTROL)

The hydraulic diagram (Fig. 7) shows the vehicle in the ABS braking mode. The diagram shows one wheel is slipping because the driver is attempting to stop the vehicle at a faster rate than is allowed by the surface on which the tires are riding.

- The normally open and normally closed valves modulate (build/decay) the brake hydraulic pressure as required.
- The pump/motor is switched on so that the brake fluid from the low pressure accumulators is returned to the master cylinder circuits.
- The brake fluid is routed to either the master cylinder or the wheel brake depending on the position of the normally open valve.

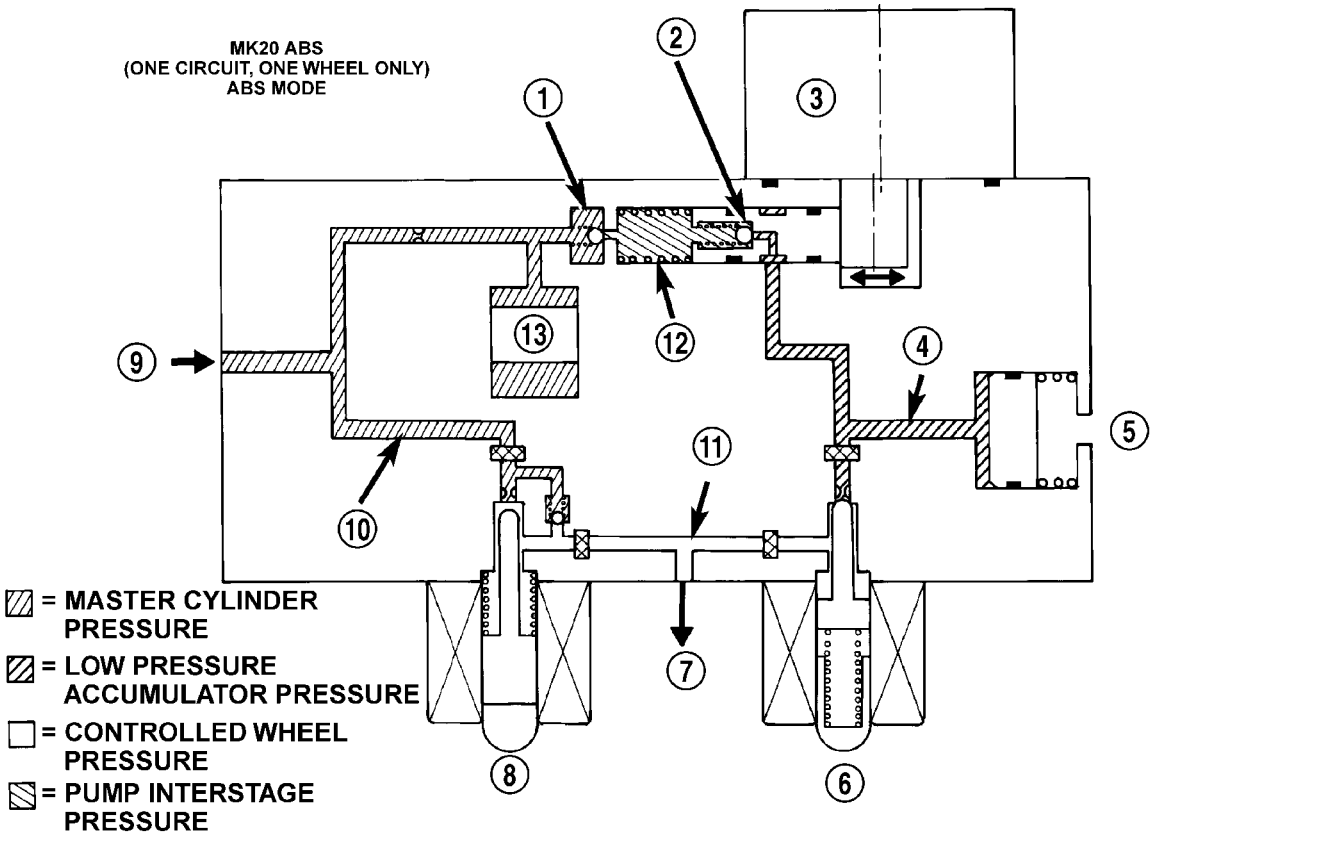

Fig. 7 ABS Without Traction Control - Primary Hydraulic Circuit

1 - OUTLET VALVE
2 - PUMP PISTON
3 - PUMP MOTOR (ON)
4 - LOW PRESSURE ACCUMULATOR PRESSURE
5 - LOW PRESSURE ACCUMULATOR
6 - NORMALLY CLOSED VALVE (MODULATING)
7 - TO RIGHT FRONT WHEEL
8 - NORMALLY OPEN VALVE (MODULATING)
9 - FROM MASTER CYLINDER
10 - MASTER CYLINDER PRESSURE
11 - CONTROLLED WHEEL PRESSURE
12 - PUMP INTERSTAGE PRESSURE
13 - NOISE DAMPER CHAMBER

HYDRAULIC/MECHANICAL (Continued)

ABS SECONDARY HYDRAULIC CIRCUIT AND SOLENOID VALVE FUNCTION (ABS WITHOUT TRACTION CONTROL)

The hydraulic diagram (Fig. 8) shows the vehicle in the ABS braking mode. The diagram shows one wheel is slipping because the driver is attempting to stop the vehicle at a faster rate than is allowed by the surface on which the tires are riding.

- The normally open and normally closed valves modulate (build/decay) the brake hydraulic pressure as required.
- The pump/motor is switched on so that the brake fluid from the low pressure accumulators is returned to the master cylinder circuits.
- The brake fluid will then be routed to either the master cylinder or the wheel brake depending on the position of the normally open valve.
- In the secondary circuit, 1.2 cc brake fluid is taken in by the lip seal saver to protect the lip seals on the master cylinder piston.

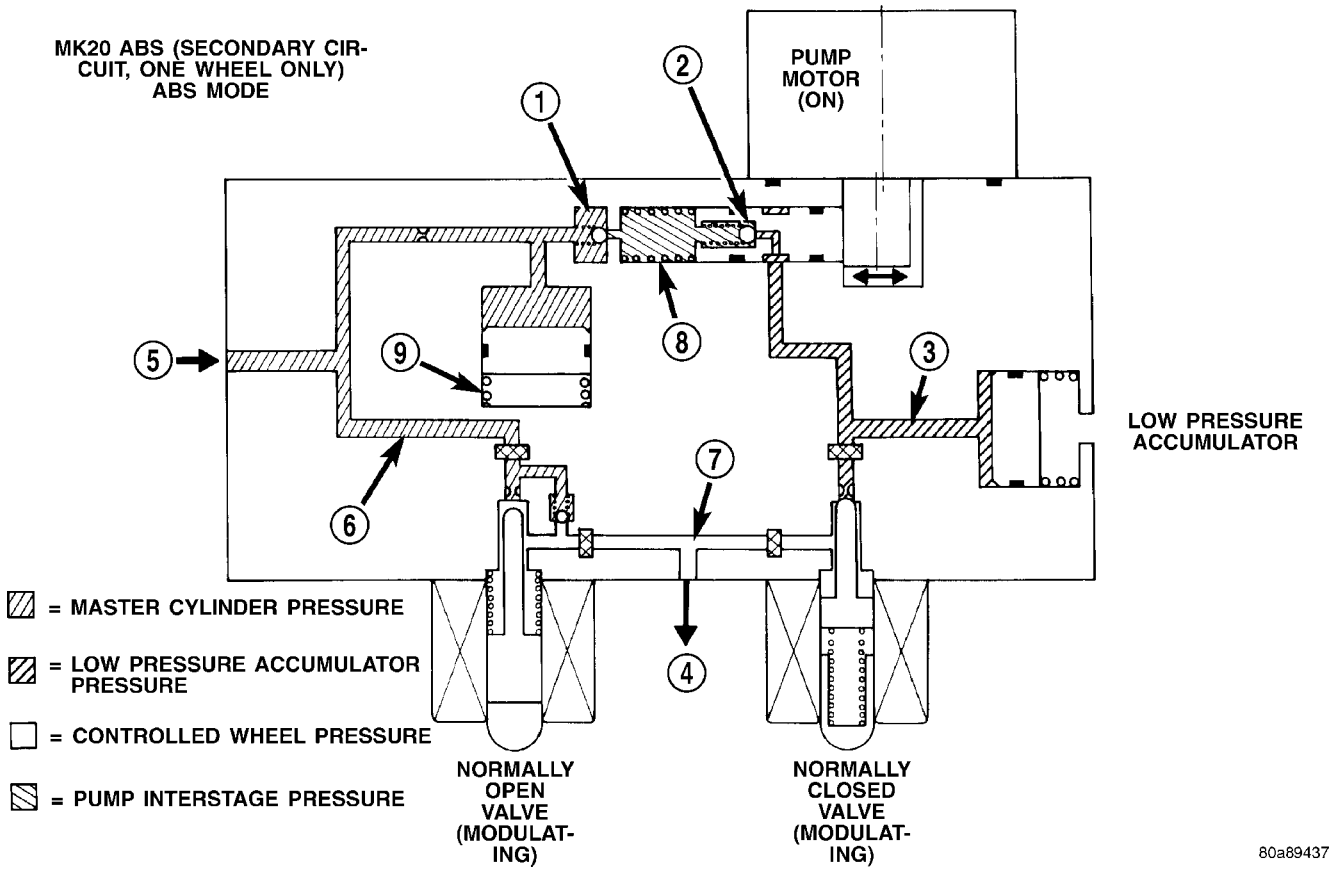

Fig. 8 ABS Without Traction Control - Secondary Hydraulic Circuit

1 - OUTLET VALVE
2 - PUMP PISTON
3 - LOW PRESSURE ACCUMULATOR PRESSURE
4 - TO RIGHT FRONT WHEEL
5 - FROM MASTER CYLINDER
6 - MASTER CYLINDER PRESSURE
7 - CONTROLLED WHEEL PRESSURE
8 - PUMP INTERSTAGE PRESSURE
9 - LIP SEAL SAVER (SECONDARY CIRCUIT ONLY)

HYDRAULIC/MECHANICAL (Continued)

NORMAL BRAKING HYDRAULIC CIRCUIT, SOLENOID VALVE, AND SHUTTLE VALVE FUNCTION (ABS WITH TRACTION CONTROL)

The hydraulic diagram (Fig. 9) shows a vehicle with traction control in the normal braking mode. The diagram shows no wheel spin or slip occurring relative to the speed of the vehicle. The driver is applying the brake pedal which builds pressure in the brake hydraulic system to engage the brakes and stop the vehicle. the hydraulic shuttle valve closes with every brake pedal application so pressure is not created at the inlet to the pump/motor.

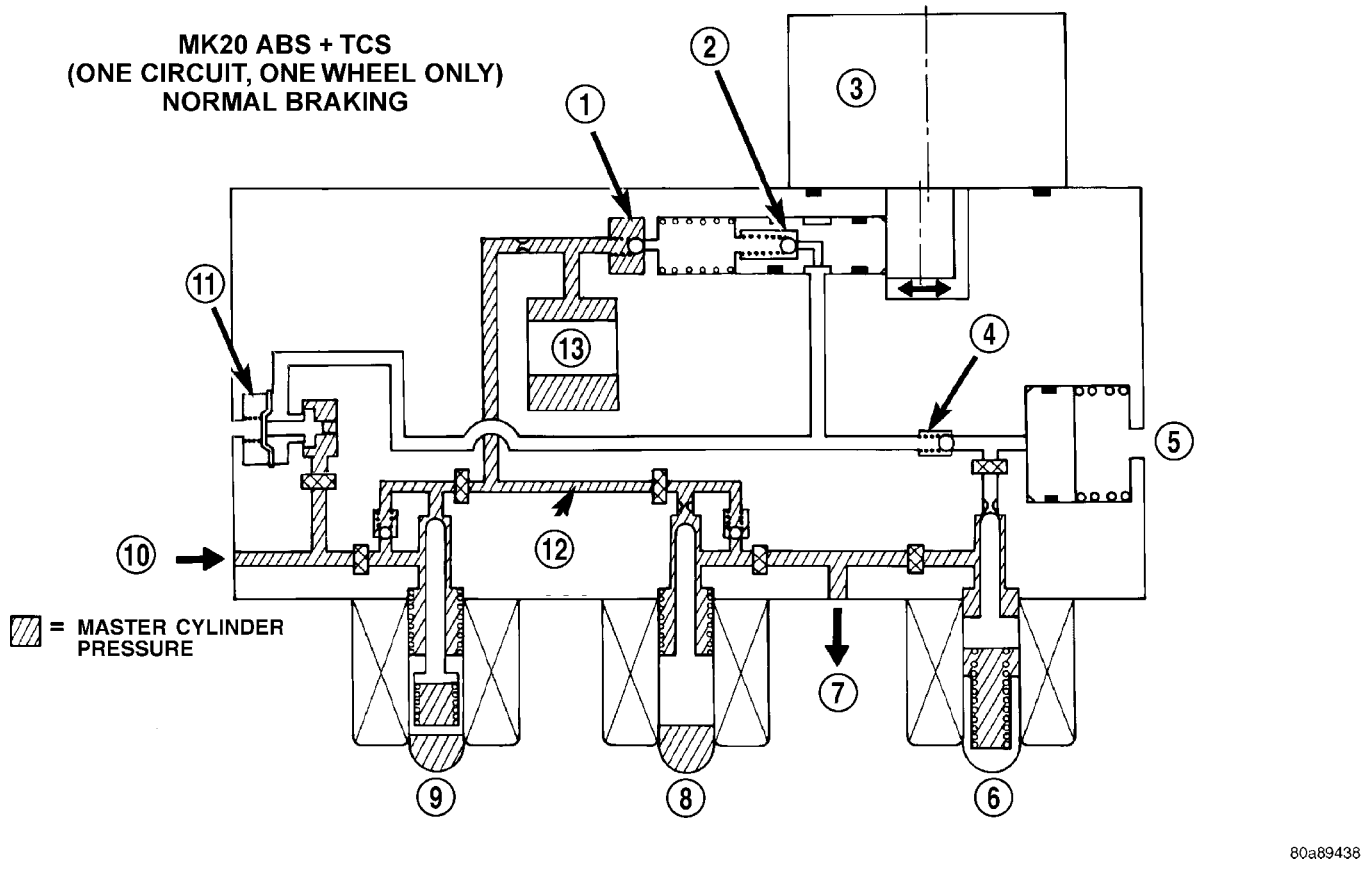

Fig. 9 ABS With Traction Control - Normal Braking Hydraulic Circuit

1 - OUTLET VALVE
2 - PUMP PISTON
3 - PUMP MOTOR (OFF)
4 - SUCTION VALVE
5 - LOW PRESSURE ACCUMULATOR
6 - NORMALLY CLOSED VALVE (OFF)
7 - TO RIGHT FRONT WHEEL
8 - NORMALLY OPEN VALVE (OFF)
9 - NORMALLY OPEN ASR VALVE (OFF)
10 - FROM MASTER CYLINDER
11 - HYDRAULIC SHUTTLE VALVE
12 - MASTER CYLINDER PRESSURE
13 - NOISE DAMPER CHAMBER

HYDRAULIC/MECHANICAL (Continued)

ABS BRAKING HYDRAULIC CIRCUIT, SOLENOID VALVE, AND SHUTTLE VALVE FUNCTION (ABS WITH TRACTION CONTROL)

The hydraulic diagram (Fig. 10) shows the vehicle in the ABS braking mode. The diagram shows one wheel is slipping because the driver is attempting to stop the vehicle at a faster rate than is allowed by the surface on which the tires are riding.

- The hydraulic shuttle valve closes upon brake application so that the pump/motor cannot siphon brake fluid from the master cylinder.
- The normally open and normally closed valves modulate (build/decay) the brake hydraulic pressure as required.
- The pump/motor is switched on so that the brake fluid from the low pressure accumulators is returned to the master cylinder circuits.
- The brake fluid is routed to either the master cylinder or the wheel brake depending on the position of the normally open valve.

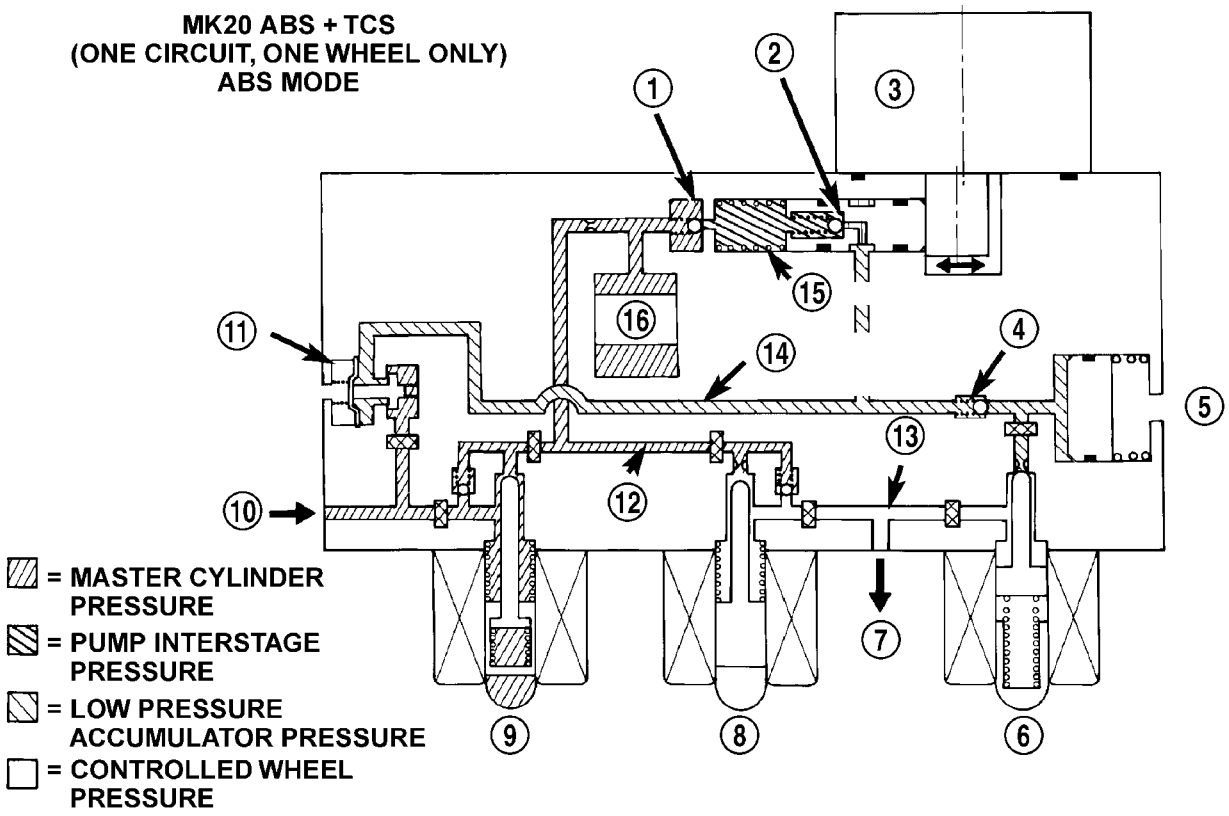

Fig. 10 ABS With Traction Control - ABS Braking Hydraulic Circuit

1 - OUTLET VALVE
2 - PUMP PISTON
3 - PUMP MOTOR (ON)
4 - SUCTION VALVE
5 - LOW PRESSURE ACCUMULATOR
6 - NORMALLY CLOSED VALVE (MODULATING)
7 - TO RIGHT FRONT WHEEL
8 - NORMALLY OPEN VALVE (MODULATING)
9 - NORMALLY OPEN ASR VALVE (OFF)
10 - FROM MASTER CYLINDER
11 - HYDRAULIC SHUTTLE VALVE
12 - MASTER CYLINDER PRESSURE
13 - CONTROLLED WHEEL PRESSURE
14 - LOW PRESSURE ACCUMULATOR PRESSURE
15 - PUMP INTERSTAGE PRESSURE
16 - NOISE DAMPER CHAMBER

HYDRAULIC/MECHANICAL (Continued)

ABS TRACTION CONTROL HYDRAULIC CIRCUIT, SOLENOID VALVE, AND SHUTTLE VALVE FUNCTION (ABS WITH TRACTION CONTROL)

The hydraulic diagram (Fig. 11) shows the vehicle in the ABS braking mode. The diagram shows a drive wheel is spinning and brake pressure is required to reduce its speed.

- The normally open ASR valve is energized to isolate the brake fluid being pumped from the master cylinder and to isolate the driven wheel.
- The normally open ASR valve bypasses the pump output back to the master cylinder at a fixed pressure setting.
- The normally open and normally closed valves modulate (build/decay) the brake pressure as required to the spinning wheel.

HCU (HYDRAULIC CONTROL UNIT)

DESCRIPTION

The hydraulic control unit (HCU) is mounted to the CAB as part of the ICU (Fig. 22). The HCU controls the flow of brake fluid to the brakes using a series of valves and accumulators. A pump/motor is mounted on the HCU to supply build pressure to the brakes during an ABS stop.

The HCU on a vehicle equipped with ABS and traction control has a valve block housing that is approximately 1 inch longer on the low pressure fluid accumulators side than a HCU on a vehicle that is equipped with only ABS.

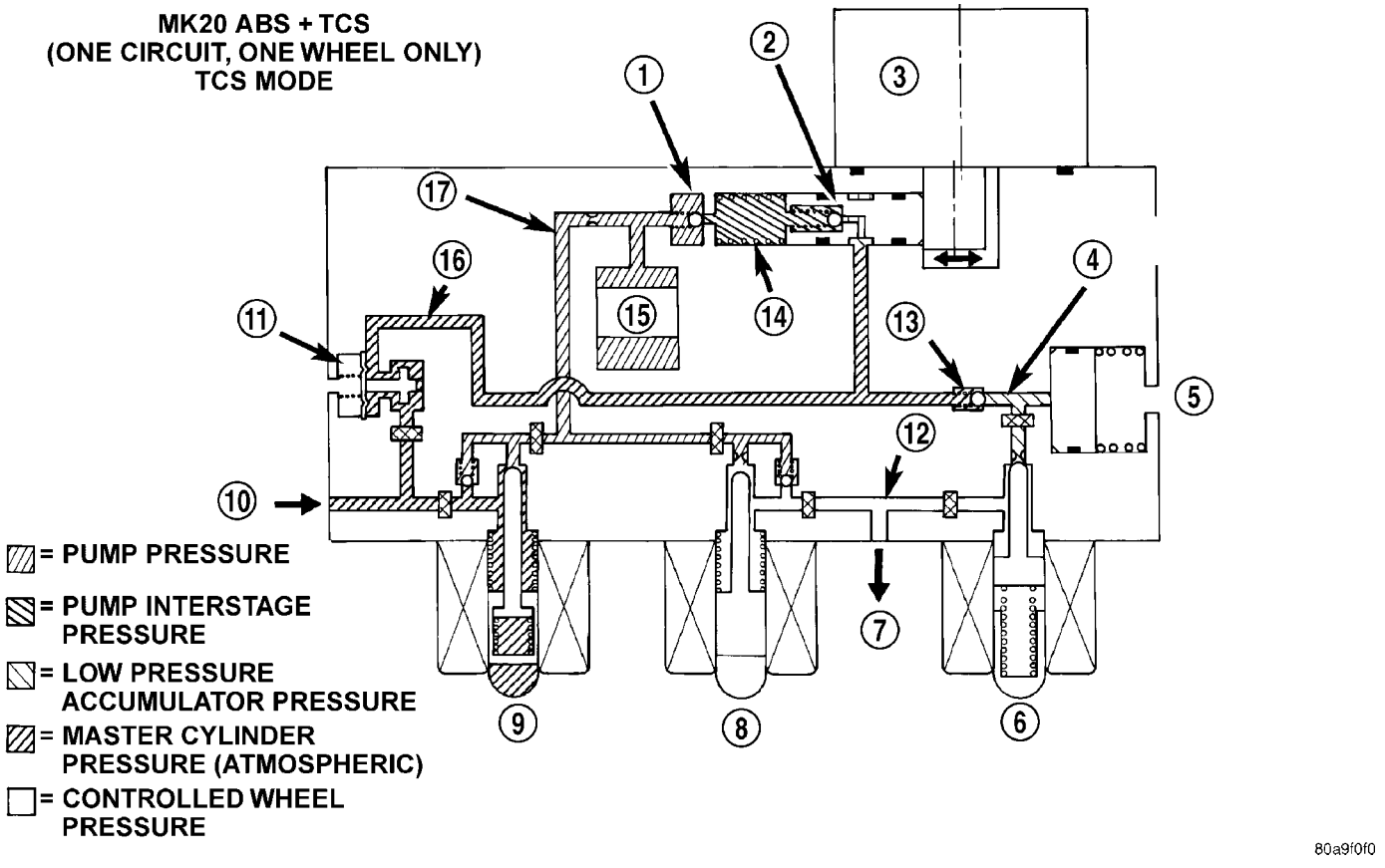

Fig. 11 Traction Control Hydraulic Circuit

1 - OUTLET VALVE
2 - PUMP PISTON
3 - PUMP MOTOR (ON)
4 - LOW PRESSURE ACCUMULATOR PRESSURE
5 - LOW PRESSURE ACCUMULATOR
6 - NORMALLY CLOSED VALVE (MODULATING)
7 - TO RIGHT FRONT WHEEL (SPINNING)
8 - NORMALLY OPEN VALVE (MODULATING)
9 - NORMALLY OPEN ASR VALVE ON (REGULATING)
10 - FROM MASTER CYLINDER
11 - HYDRAULIC SHUTTLE VALVE
12 - CONTROLLED WHEEL PRESSURE
13 - SUCTION VALVE
14 - PUMP INTERSTAGE PRESSURE
15 - NOISE DAMPER CHAMBER
16 - MASTER CYLINDER PRESSURE
17 - PUMP PRESSURE

HCU (HYDRAULIC CONTROL UNIT) (Continued)

For more information, (Refer to 5 - BRAKES/HYDRAULIC/MECHANICAL/ICU (INTEGRATED CONTROL UNIT) - DESCRIPTION)

OPERATION

For information on the operation of the HCU as a whole, refer to Hydraulic Circuits And Valve Operation which can be found elsewhere in this section. For information on the operation of the components within the HCU, refer to the following three topics.

VALVES AND SOLENOIDS

The valve block contains four inlet valves and four outlet valves. The inlet valves are spring-loaded in the open position and the outlet valves are spring-loaded in the closed position during normal braking. The fluid is allowed to flow from the master cylinder to the wheel brakes.

During an ABS stop, these valves cycle to maintain the proper slip ratio for each wheel. The inlet valve closes preventing further pressure increase and the outlet valve opens to provide a path from the wheel brake to the HCU accumulators and pump/motor. This releases (decays) pressure from the wheel brake, thus releasing the wheel from excessive slippage. Once the wheel is no longer slipping, the outlet valve is closed and the inlet valve is opened to reapply (build) pressure.

On vehicles with traction control, there is an extra set of valves and solenoids. The ASR valves, mounted in the HCU valve block, are normally in the open position and close only when the traction control is applied.

These isolator valves are used to isolate the rear (non-driving) wheels of the vehicle from the hydraulic pressure that the HCU pump/motor is sending to the front (driving) wheels when traction control is being applied. The rear brakes need to be isolated from the master cylinder when traction control is being applied so the rear wheels do not drag. For more information, refer to Traction Control System in this section.

BRAKE FLUID ACCUMULATORS

There are two fluid accumulators in the HCU–one for the primary hydraulic circuit and one for the secondary hydraulic circuit. Each hydraulic circuit uses a 5 cc accumulator.

The fluid accumulators temporarily store brake fluid that is removed from the wheel brakes during an ABS cycle. This stored fluid is used by the pump/motor to provide build pressure for the brake hydraulic system. When the antilock stop is complete, the accumulators are drained by the pump/motor.

On ABS-only vehicles, there is a mini-accumulator on the secondary hydraulic circuit that protects the master cylinder seals during an ABS stop, and there is a noise dampening chamber on the primary circuit.

On ABS with traction control vehicles, there are two noise dampening chambers in the HCU.

PUMP/MOTOR

There are two pump assemblies in the HCU—one for the primary hydraulic circuit and one for the secondary hydraulic circuit. Both pumps are driven by a common electric motor. This DC-type motor is integral to the HCU and is controlled by the CAB.

The pump/motor provides the extra amount of brake fluid needed during antilock braking. Brake fluid is released to the accumulators when the outlet valve is opened during an antilock stop. The pump mechanism consists of two opposing pistons operated by an eccentric camshaft. In operation, one piston draws fluid from the accumulators, and the opposing piston pumps fluid to the master cylinder circuits. When the antilock stop is complete, the pump/motor drains the accumulators.

The CAB may turn on the pump/motor when an antilock stop is detected. The pump/motor continues to run during the antilock stop and is turned off after the stop is complete. Under some conditions, the pump/motor runs to drain the accumulators during the next drive-off.

The pump/motor is not a serviceable item; if it requires replacement, the HCU must be replaced.

ICU (INTEGRATED CONTROL UNIT)

DESCRIPTION

The hydraulic control unit (HCU) and the controller antilock brake (CAB) used with this antilock brake system are combined (integrated) into one unit, which is called the integrated control unit (ICU) (Fig. 12). The ICU is located below the master cylinder in the engine compartment (Fig. 13).

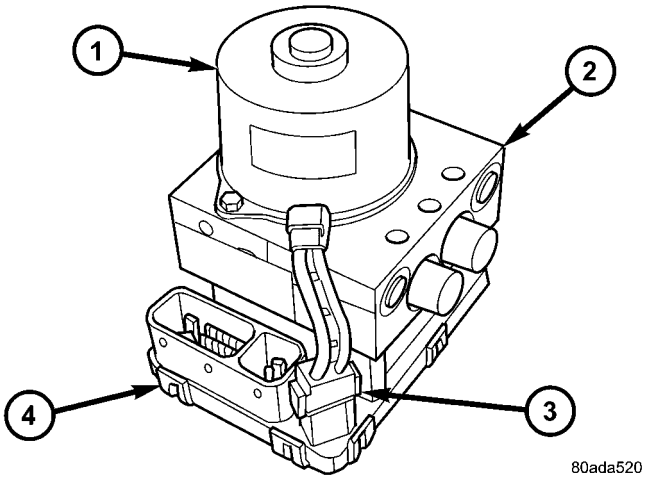

Fig. 12 INTEGRATED CONTROL UNIT (ICU)

1 - PUMP/MOTOR
2 - HCU
3 - PUMP/MOTOR CONNECTOR
4 - CAB

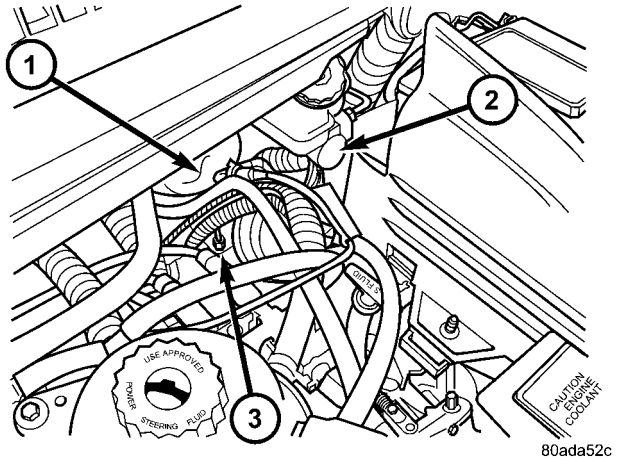

Fig. 13 ICU LOCATION IN VEHICLE

1 - POWER BRAKE BOOSTER
2 - MASTER CYLINDER
3 - ICU

Two different ICU's (HCU and CAB) are used on this vehicle depending on whether or not the vehicle is equipped with traction control. The HCU on a vehicle equipped with traction control has a valve block that is approximately one inch longer than a HCU on a vehicle that is equipped with ABS only.

The ABS-only ICU consists of the following components: the CAB, eight (build/decay) solenoid valves (four inlet valves and four outlet valves), valve block, fluid accumulators, a pump, and an electric motor.

The ABS-with traction control ICU consists of the following components: the CAB, eight (build/decay) solenoid valves (four inlet valves and four outlet valves), two traction control (ASR) valves, two hydraulic shuttle valves, valve block, fluid accumulators, a pump, and an electric motor.

The replaceable components of the ICU are the HCU and the CAB. No attempt should be made to service any individual components of the HCU or CAB. For information on the CAB, (Refer to 8 - ELECTRICAL/ELECTRONIC CONTROL MODULES/CONTROLLER ANTILOCK BRAKE - DESCRIPTION).

OPERATION

For information of the ICU, refer to these individual components of the ICU:

- CONTROLLER ANTILOCK BRAKE (CAB) (Refer to 8 - ELECTRICAL/ELECTRONIC CONTROL MODULES/CONTROLLER ANTILOCK BRAKE - OPERATION)
- HYDRAULIC CONTROL UNIT (HCU) (Refer to 5 - BRAKES - ABS/HYDRAULIC/MECHANICAL/HCU (HYDRAULIC CONTROL UNIT) - OPERATION)

For information on the ICU's hydraulic circuits, refer to HYDRAULIC CIRCUITS AND VALVE OPERATION. (Refer to 5 - BRAKES - ABS/HYDRAULIC/MECHANICAL - OPERATION)

REMOVAL

REMOVAL - LHD

(1) Disconnect the negative (ground) cable from the battery and isolate cable.

(2) Remove the battery shield.

(3) Remove the battery (Refer to 8 - ELECTRICAL/BATTERY SYSTEM/BATTERY - REMOVAL).

(4) Disconnect the vacuum hose connector at the tank built into the battery tray.

(5) Remove the screw securing the engine coolant filler neck to the battery tray.

(6) Remove the battery tray (Refer to 8 - ELECTRICAL/BATTERY SYSTEM/TRAY - REMOVAL).

(7) Using a brake pedal depressor, move and lock the brake pedal to a position past the first inch of pedal travel. **This will prevent brake fluid from**

ICU (INTEGRATED CONTROL UNIT) (Continued)

draining out of the master cylinder once the brake tubes are removed from the HCU.

CAUTION: Do not apply a 12–volt power source to any terminals of the 24-way CAB connector when disconnected.

(8) Disconnect the wiring harness connector from the speed control servo.

(9) Remove the speed control servo mounting nuts and move the servo out of the way.

(10) Disconnect the 24–way connector from the CAB. To disconnect the 24–way connector, grasp the lock on the 24–way connector and pull it as far up as possible. This will unlock the 24–way connector from the socket on the CAB.

CAUTION: Before removing the brake tubes from the HCU, the HCU must be thoroughly cleaned. This must be done to prevent dirt particles from falling into the ports of HCU or entering the brake tubes.

(11) Thoroughly clean all surfaces of the ICU and brake tube nuts. Use only a solvent such as Mopar® Brake Parts Cleaner or equivalent to clean the ICU.

(12) Remove the brake tubes (4) from the outlet ports on the HCU (Fig. 14).

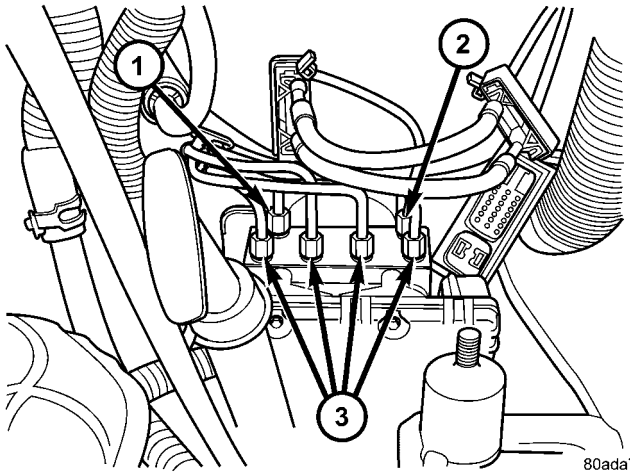

Fig. 14 Brake Tube Nuts At ICU

1 - PRIMARY BRAKE TUBE
2 - SECONDARY BRAKE TUBE
3 - CHASSIS BRAKE TUBES

(13) Remove the primary and secondary brake tubes from the inlet ports on the HCU (Fig. 14).

(14) Center and prop the steering wheel.

(15) Remove the pinch bolt and disconnect the steering shaft coupling.

(16) If equipped, remove the two clips securing silencer to dash seal (Fig. 15). Remove silencer.

(17) Remove the three screws securing the dash seal (Fig. 15). Remove seal.

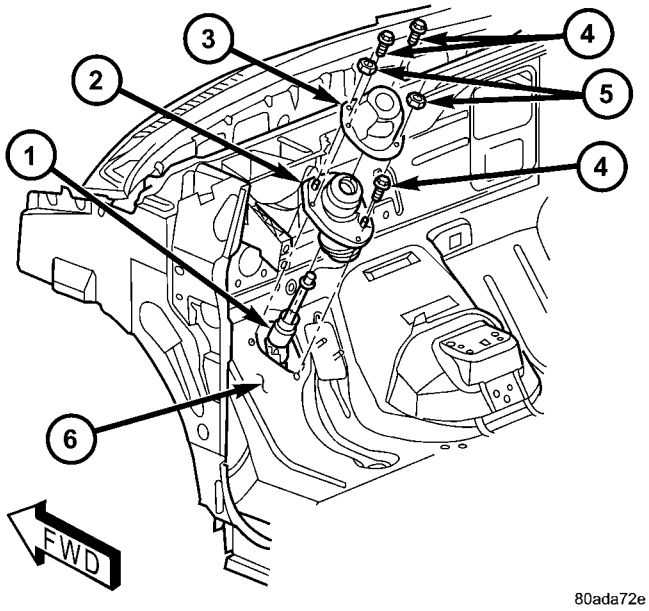

Fig. 15 Lower Coupling And Dash Seal

1 - COUPLING
2 - DASH SEAL
3 - SILENCER
4 - MOUNTING SCREWS
5 - RETAINING CLIPS
6 - DASH

(18) Remove the 3 bolts attaching the ICU to its mounting bracket (Fig. 16).

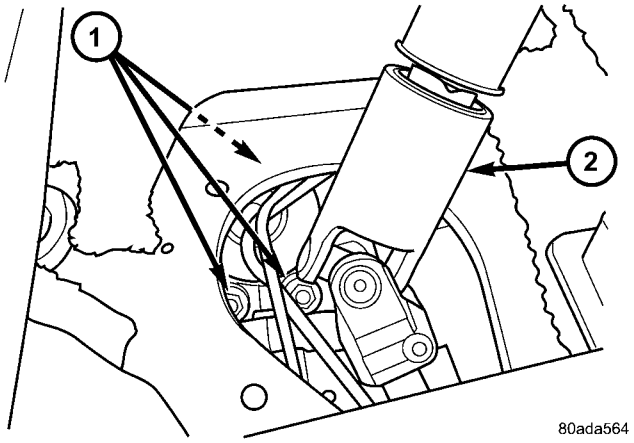

Fig. 16 ICU Mounting Bolts

1 - ICU MOUNTING BOLTS
2 - COUPLER

(19) Remove ICU from the vehicle through engine compartment.

(20) If required, to separating the CAB from the HCU, (Refer to 5 - BRAKES - ABS/HYDRAULIC/ME-

ICU (INTEGRATED CONTROL UNIT) (Continued)

CHANICAL/ICU (INTEGRATED CONTROL UNIT) - DISASSEMBLY).

REMOVAL - RHD

NOTE: Before proceeding, (Refer to 5 - BRAKES - WARNING)(Refer to 5 - BRAKES - CAUTION)

(1) Disconnect the negative (ground) cable from the battery and isolate cable.

(2) Using a brake pedal depressor, move and lock the brake pedal to a position past the first inch of pedal travel. **This will prevent brake fluid from draining out of the master cylinder when the brake tubes are removed from the HCU.**

(3) Raise vehicle. (Refer to LUBRICATION & MAINTENANCE/HOISTING - STANDARD PROCEDURE)

(4) Remove the routing clip attaching the ICU wiring harness to the ICU mounting bracket (Fig. 17).

CAUTION: Do not apply a 12 volt power source to any terminals of the HCU connector when disconnected.

(5) Remove the 24-way connector (Fig. 17) from the CAB. The 24-way connector is removed from the CAB using the following procedure. Grasp the lock on the 24-way connector (Fig. 17) and pull it as far out as possible (Fig. 18). This will raise and unlock the 24-way connector from the socket on the CAB.

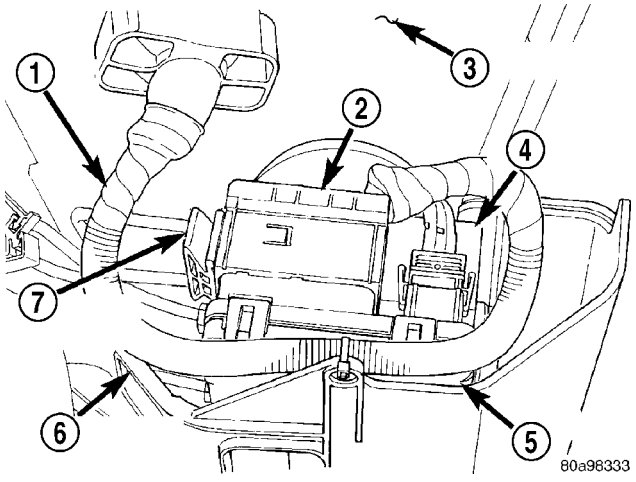

Fig. 17 CAB 24-Way Connector

1 - CAB WIRING HARNESS
2 - 24–WAY CONNECTOR
3 - FLOOR PAN
4 - HCU
5 - CAB
6 - HCU MOUNTING BRACKET
7 - CONNECTOR LOCK

CAUTION: Before removing the brake tubes from the HCU, the HCU must be thoroughly cleaned. This must be done to prevent dirt particles from falling into the ports of HCU or entering the brake tubes.

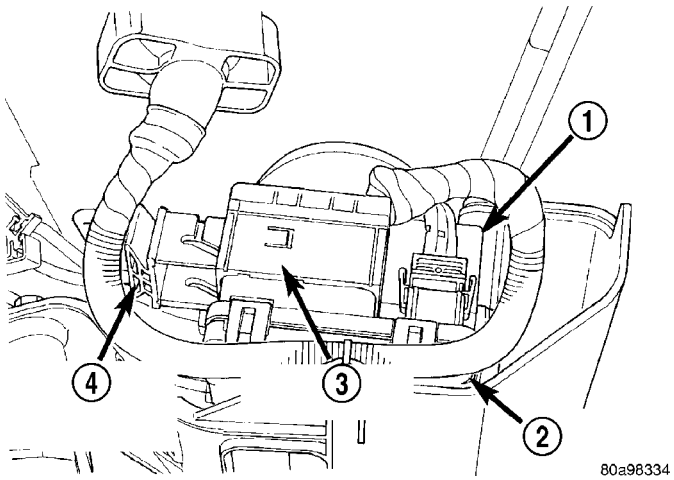

Fig. 18 Unlocked 24-Way CAB Connector

1 - HCU
2 - CAB
3 - 24–WAY CONNECTOR
4 - CONNECTOR LOCK (UNLOCKED)

(6) Thoroughly clean all surfaces of the HCU, and all brake tube nuts located on the HCU. Use only a solvent such as Mopar Brake Parts Cleaner or an equivalent to clean the HCU.

(7) Remove the brake tubes (6) from the inlet and outlet ports on the HCU. (Fig. 19).

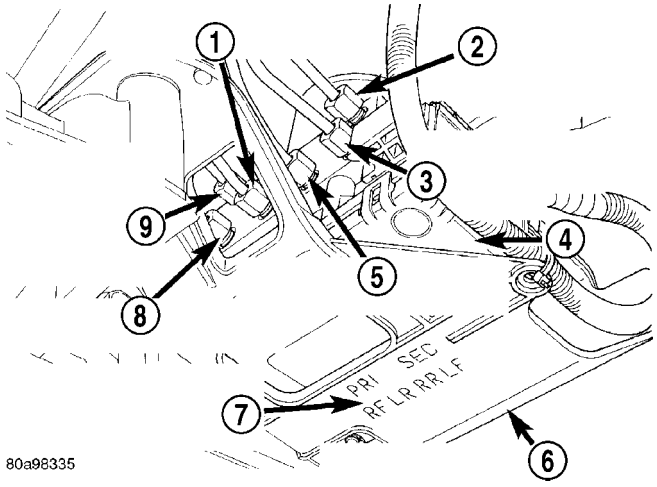

Fig. 19 Brake Tube Connections To HCU

1 - LEFT REAR WHEEL BRAKE TUBE
2 - SECONDARY BRAKE TUBE FROM MASTER CYLINDER
3 - LEFT FRONT WHEEL BRAKE TUBE
4 - CAB
5 - RIGHT REAR WHEEL BRAKE TUBE
6 - HCU MOUNTING BRACKET
7 - BRAKE TUBE TO HCU CONNECTION LOCATION LEGEND
8 - RIGHT FRONT WHEEL BRAKE TUBE
9 - PRIMARY BRAKE TUBE FROM MASTER CYLINDER

ICU (INTEGRATED CONTROL UNIT) (Continued)

(8) Remove the 3 bolts (Fig. 20) attaching the ICU mounting bracket to the front suspension crossmember.

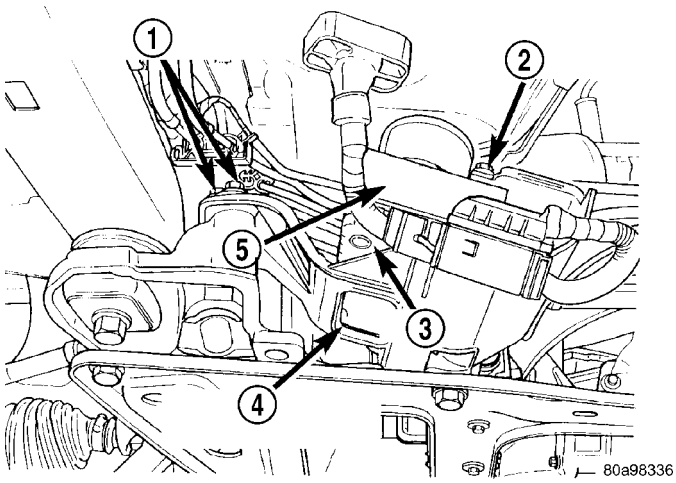

Fig. 20 ICU To Suspension Cradle Mounting Bolts

1 - HCU MOUNTING BRACKET BOLTS
2 - HCU MOUNTING BRACKET BOLT
3 - CAB
4 - HCU MOUNTING BRACKET
5 - HCU

(9) Remove ICU and the mounting bracket as a unit from the vehicle.

(10) Remove the 3 bolts (Fig. 21) mounting the ICU to the mounting bracket. Separate the ICU from the mounting bracket.

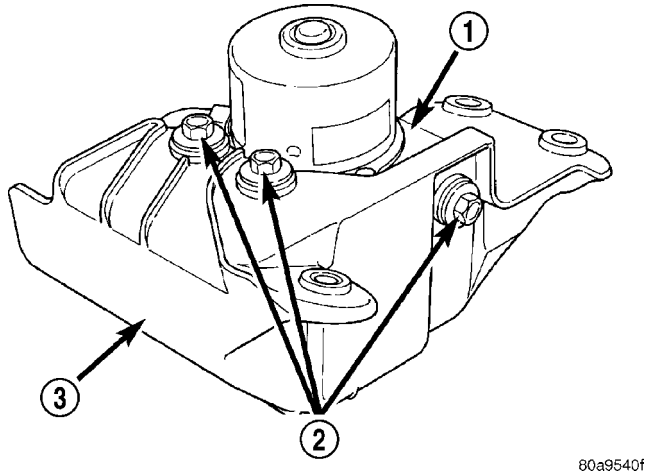

Fig. 21 ICU Mounting Bolts

1 - HCU
2 - HCU MOUNTING BOLTS
3 - HCU MOUNTING BRACKET

(11) For the procedure on separating and attaching the CAB to the HCU, refer to DISASSEMBLY.

DISASSEMBLY - ICU

(1) Remove the ICU from the vehicle. (Refer to 5 - BRAKES/HYDRAULIC/MECHANICAL/ICU (INTEGRATED CONTROL UNIT) - REMOVAL)

(2) Disconnect the pump/motor wiring harness from the CAB (Fig. 22).

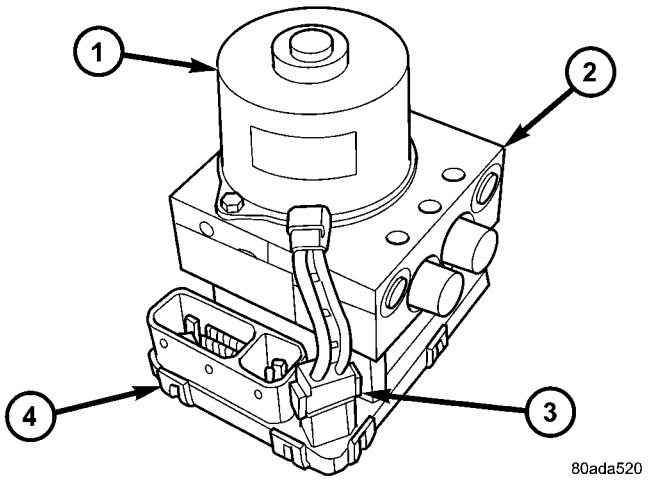

Fig. 22 INTEGRATED CONTROL UNIT (ICU)

1 - PUMP/MOTOR
2 - HCU
3 - PUMP/MOTOR CONNECTOR
4 - CAB

(3) Remove the 4 bolts (Fig. 23) attaching the CAB to the HCU.

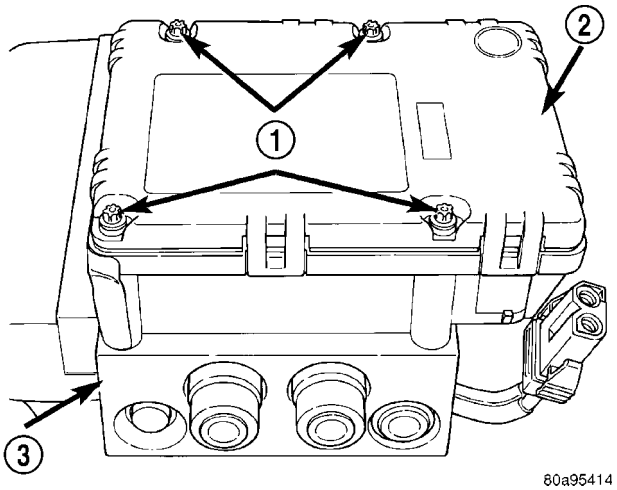

Fig. 23 (TYPICAL) CAB Attaching Bolts

1 - MOUNTING BOLTS
2 - CAB
3 - HCU VALVE BLOCK

(4) Remove the CAB from the HCU (Fig. 24).

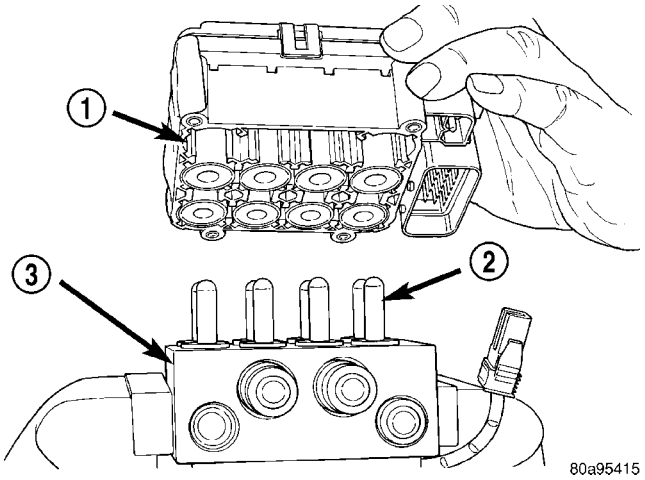

Fig. 24 (TYPICAL) Remove/Install CAB

1 - CAB
2 - HCU VALVES
3 - HCU VALVE BLOCK

ASSEMBLY - ICU

(1) Install the CAB (Fig. 24) on the HCU.

(2) Install the 4 bolts mounting the CAB (Fig. 23) to the HCU. Tighten the CAB mounting bolts to a torque of 2 N·m (17 in. lbs.).

(3) Plug the pump/motor wiring harness into the CAB.

(4) Install the ICU in the vehicle and bleed the base and ABS hydraulic systems. (Refer to 5 - BRAKES/HYDRAULIC/MECHANICAL/ICU (INTEGRATED CONTROL UNIT) - INSTALLATION)

INSTALLATION

INSTALLATION - LHD

(1) Place the ICU in its bracket below the master cylinder. Start the upper mounting bolt to hold it in place.

(2) Inside the vehicle, install the remaining 2 mounting bolts attaching the ICU to the mounting bracket (Fig. 16). Tighten all 3 mounting bolts to a torque of 11 N·m (97 in. lbs.).

(3) Install the dash seal and three mounting screws (Fig. 15).

(4) If equipped, install the silencer on top of the dash seal (Fig. 15).

(5) Connect the steering shaft coupling and install the pinch bolt (Fig. 15). Tighten the pinch bolt to 28 N·m (250 in. lbs.).

(6) Remove the steering wheel holder.

CAUTION: Because of the flexible section in the primary and secondary brake tubes, the brake tubes must be held in proper orientation when tightened and torqued. These tubes must not contact each other or other vehicle components when installed. Also, after the brake tubes are installed on the HCU, ensure all spacer clips are reinstalled on the brake tubes.

(7) Install the primary and secondary brake tubes into their correct port locations on the HCU valve block (Fig. 14). Tighten the tube nuts to a torque of 17 N·m (145 in. lbs.).

CAUTION: When installing the chassis brake tubes on the HCU valve block, they must be located correctly in the valve block to ensure proper ABS operation.

NOTE: The chassis brake tube attachment locations to the HCU, are marked on the bottom of the CAB.

(8) Install the (4) chassis brake tubes into their correct port locations on the HCU valve block as shown (Fig. 14). Tighten the tube nuts to a torque of 17 N·m (145 in. lbs.).

NOTE: Before installing the 24–way connector in the CAB be sure the seal is properly installed in the connector.

(9) Install the 24–way connector on the CAB by, first, positioning the 24–way connector in the socket of the CAB and carefully pushing it down as far as possible. Once connector is fully seated by hand into the CAB socket, push down on connector lock. This will pull the connector into the socket of the CAB and lock it in the installed position.

(10) Install any routing clips on the brake tubes.

(11) Remove the brake pedal holder.

(12) Install the speed control servo with its mounting nuts.

(13) Connect the wiring harness to the speed control servo.

(14) Install the battery tray (Refer to 8 - ELECTRICAL/BATTERY SYSTEM/TRAY - INSTALLATION).

(15) Install the screw securing the coolant filler neck to the battery tray.

(16) Reconnect the vacuum hose connector at the tank built into the battery tray.

(17) Install the battery (Refer to 8 - ELECTRICAL/BATTERY SYSTEM/BATTERY - INSTALLATION).

(18) Install the battery shield.

(19) Remove the brake pedal holder.

(20) Connect negative cable back on negative post of the battery.

ICU (INTEGRATED CONTROL UNIT) (Continued)

(21) Bleed the Base and ABS brake hydraulic systems (Refer to 5 - BRAKES - STANDARD PROCEDURE).

(22) Road test vehicle to ensure proper operation of the base and antilock brake systems.

INSTALLATION - RHD

(1) Install the ICU on the mounting bracket (Fig. 21). Install the 3 bolts (Fig. 21) attaching the ICU to the mounting bracket. Tighten the 3 mounting bolts to a torque of 11 N·m (97 in. lbs.).

CAUTION: The ICU mounting bracket to front suspension cradle mounting bolts have a unique corrosion protection coating and a special aluminum washer. For this reason, only the original, or original equipment Mopar replacement bolts can be used to mount the ICU bracket to the front suspension crossmember.

(2) Install the ICU and its mounting bracket as an assembly on the front suspension crossmember. Install the 3 bolts attaching the ICU bracket to the crossmember (Fig. 20). Tighten the 3 mounting bolts to a torque of 28 N·m (250 in. lbs.).

CAUTION: Because of the flexible section in the primary and secondary brake tubes, and the brake tubes between the HCU and the proportioning valve, the brake tubes must be held in proper orientation when tightened and torqued. These tubes must not contact each other or other vehicle components when installed. Also, after the brake tubes are installed on the HCU, ensure all spacer clips are reinstalled on the brake tubes.

CAUTION: When installing the chassis brake tubes on the HCU valve block, they must be located correctly in the valve block to ensure proper ABS operation. Refer to (Fig. 19) for the correct chassis brake tube locations.

NOTE: The chassis brake tube attachment locations to the HCU, are marked on the bottom of the ICU mounting bracket.

(3) Install the 6 chassis brake tubes into their correct port locations on the HCU valve block as shown in (Fig. 19). Tighten the tube nuts to a torque of 17 N·m (145 in. lbs.).

NOTE: Before installing the 24-way connector in the CAB be sure the seal is properly installed in the connector.

(4) Install the 24-way connector (Fig. 17) on the CAB using the following procedure. Position the 24-way connector in the socket of the CAB and carefully push it down as far as possible. When connector is fully seated by hand into the CAB socket, push in the connector lock (Fig. 18). This will pull the connector into the socket of the CAB and lock it in the installed position.

NOTE: The CAB wiring harness must be clipped to the ICU mounting bracket. This will ensure the wiring harness is properly routed and does not contact the brake tubes or the body of the vehicle.

(5) Clip the cab wiring harness (Fig. 17) to the ICU mounting bracket.

(6) Install the routing clips (Fig. 25) on the brake tubes.

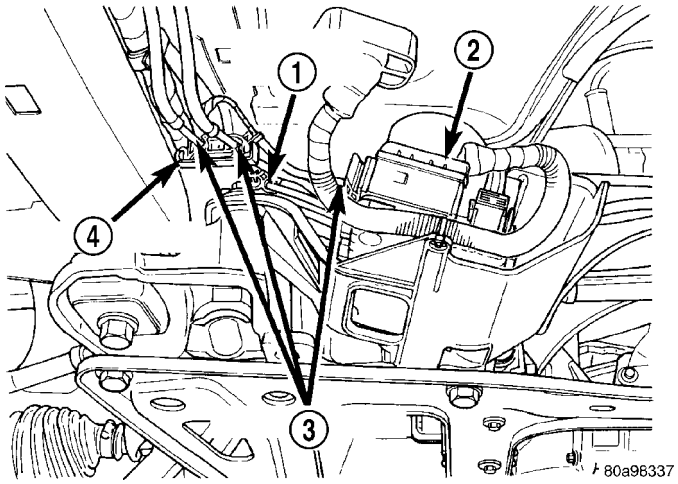

Fig. 25 Brake Tube Routing Clips

1 - ROUTING CLIP
2 - HCU
3 - BRAKE TUBES
4 - ROUTING CLIP

(7) Lower the vehicle.

(8) Connect negative cable back on negative post of the battery.

(9) Bleed the base and ABS hydraulic systems. (Refer to 5 - BRAKES - STANDARD PROCEDURE)

(10) Road test vehicle to ensure proper operation of the base and antilock brake systems.

COOLING

TABLE OF CONTENTS

	page
COOLING	
DESCRIPTION	
DESCRIPTION - COOLING SYSTEM	1
DESCRIPTION - HOSE CLAMPS	1
OPERATION	
OPERATION - COOLING SYSTEM	2
OPERATION - HOSE CLAMPS	2
DIAGNOSIS AND TESTING	
DIAGNOSIS AND TESTING - COOLING SYSTEM LEAK TEST	2
DIAGNOSIS AND TESTING - COOLING SYSTEM FLOW CHECK	3
DIAGNOSIS AND TESTING - COOLING SYSTEM AERATION	4
DIAGNOSIS AND TESTING - COOLING SYSTEM DEAERATION	4
STANDARD PROCEDURE	
STANDARD PROCEDURE - COOLING SYSTEM DRAINING	4
STANDARD PROCEDURE - COOLING SYSTEM FILLING	4
STANDARD PROCEDURE - ADDING ADDITIONAL COOLANT	4
STANDARD PROCEDURE - COOLANT LEVEL CHECK	4
SPECIFICATIONS	
ACCESSORY DRIVE BELT TENSION	5
TORQUE	5
SPECIAL TOOLS	
COOLING SYSTEM	6
ACCESSORY DRIVE	7
ENGINE	13
TRANSMISSION	38

COOLING

DESCRIPTION

DESCRIPTION - COOLING SYSTEM

The cooling system components consist of a radiator, electric fan motors, shroud, pressure cap, thermostat, transmission oil cooler, water pump, hoses, clamps, coolant, and a coolant reserve system to complete the circuit.

DESCRIPTION - HOSE CLAMPS

The cooling system uses spring type hose clamps. If a spring type clamp replacement is necessary, replace with the original Mopar® equipment spring type clamp.

CAUTION: A number or letter is stamped into the tongue of constant tension clamps. If replacement is necessary, use only a original equipment clamp with matching number or letter (Fig. 1).

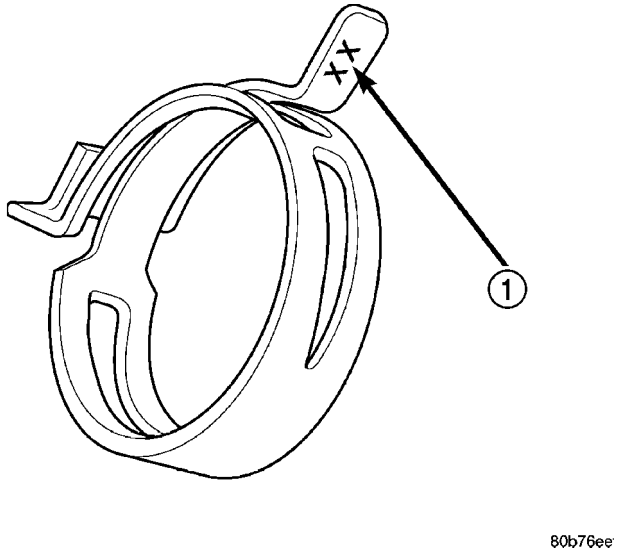

Fig. 1 Spring Clamp Size Location

1 - SPRING CLAMP SIZE LOCATION

COOLING (Continued)

OPERATION

OPERATION - COOLING SYSTEM

The engine cooling systems primary purpose is to maintain engine temperature in a range that will provide satisfactory engine performance and emission levels under all expected driving conditions. It also provides hot water (coolant) for heater performance and cooling for automatic transmission oil. It does this by transferring heat from engine metal to coolant, moving this heated coolant to the radiator, and then transferring this heat to the ambient air.

- When engine is cold: thermostat is closed, cooling system has no flow through the radiator. The coolant bypass flows through the engine only.
- When engine is warm: thermostat is open, cooling system has bypass flow and coolant flow through radiator.

Coolant flow circuits for the 2.4L and 3.3/3.8L engines are shown in (Fig. 2).

OPERATION - HOSE CLAMPS

The spring type hose clamp applies constant tension on a hose connection. To remove a spring type hose clamp, use Special Tool 6094 or equivalent, constant tension clamp pliers (Fig. 3) to compress the hose clamp.

DIAGNOSIS AND TESTING

DIAGNOSIS AND TESTING - COOLING SYSTEM LEAK TEST

WARNING: THE WARNING WORDS "DO NOT OPEN HOT" ON THE RADIATOR PRESSURE CAP IS A SAFETY PRECAUTION. WHEN HOT, PRESSURE BUILDS UP IN COOLING SYSTEM. TO PREVENT SCALDING OR INJURY, THE RADIATOR CAP SHOULD NOT BE REMOVED WHILE THE SYSTEM IS HOT OR UNDER PRESSURE.

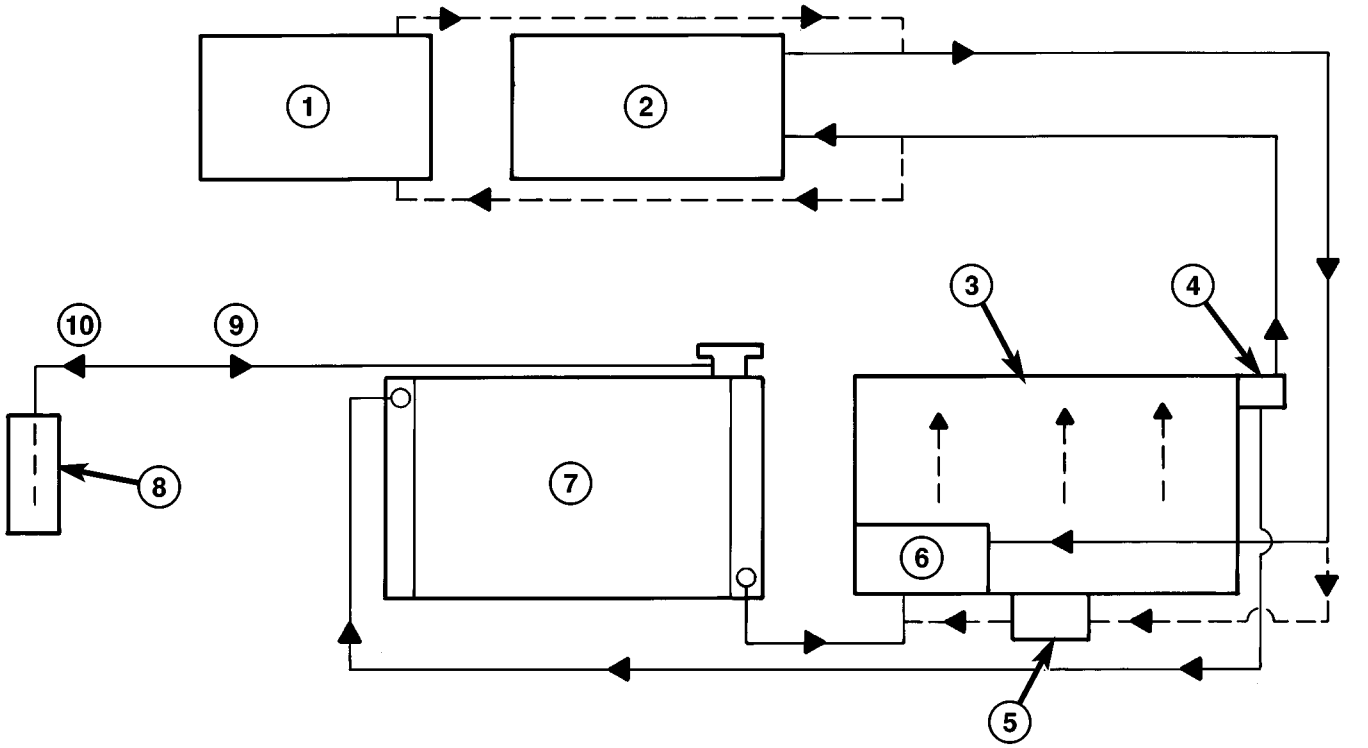

80a9089c

Fig. 2 Cooling System Flow

1 - HEATER - REAR (3.3/3.8L OPTIONAL EQUIPMENT)
2 - HEATER - FRONT
3 - ENGINE
4 - THERMOSTAT
5 - ENGINE OIL COOLER (3.3/3.8L OPTIONAL EQUIPMENT)
6 - WATER PUMP
7 - RADIATOR
8 - COOLANT RECOVERY/RESERVE CONTAINER
9 - COOLANT FLOW - PRESSURE CAP VACUUM
10 - COOLANT FLOW - PRESSURE CAP RELIEF

COOLING (Continued)

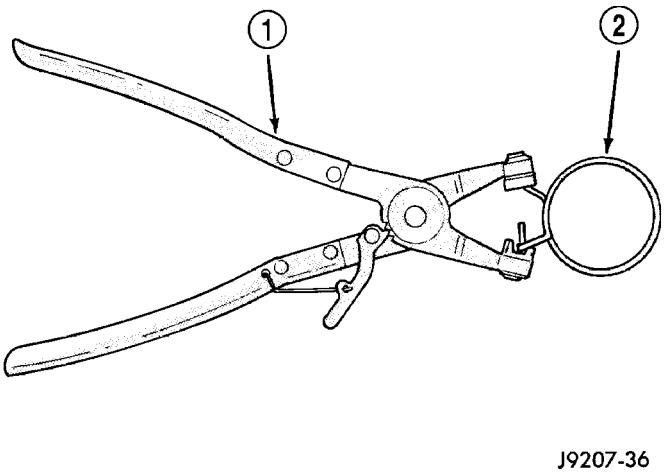

Fig. 3 Hose Clamp Tool

1 - HOSE CLAMP TOOL 6094
2 - HOSE CLAMP

With engine not running, remove radiator pressure cap and wipe the radiator filler neck sealing seat clean. The radiator should be full.

Attach the Cooling System Tester 7700 or equivalent to the radiator, as shown in (Fig. 4) and apply 104 kPa (15 psi) pressure. If the pressure drops more than 13.8 kPa (2 psi) in 2 minutes, inspect all points for external leaks.

All radiator and heater hoses should be shaken while at 104 kPa (15 psi), since some leaks occur only while driving due to engine movement.

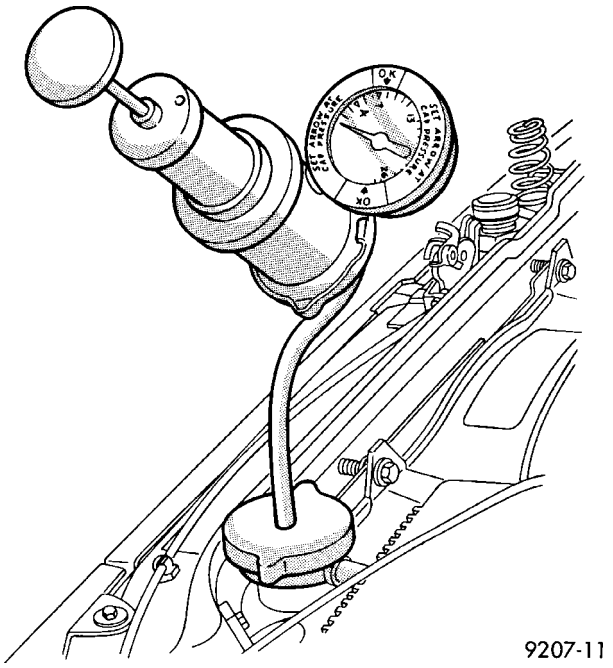

Fig. 4 Pressure Testing

If there are no external leaks, after the gauge dial shows a drop in pressure, detach the tester. Start engine and run until the thermostat opens, allowing the coolant to expand. Reattach the cooling system tester. If the needle on the dial fluctuates it indicates a combustion leak, usually a head gasket leak.

WARNING: WITH TOOL IN PLACE, PRESSURE WILL BUILD UP FAST. EXCESSIVE PRESSURE BUILT UP, BY CONTINUOUS ENGINE OPERATION, MUST BE RELEASED TO A SAFE PRESSURE POINT. NEVER PERMIT PRESSURE TO EXCEED 138 kPa (20 psi).

If the needle on the dial does not fluctuate, raise the engine rpm a few times. If an abnormal amount of coolant or steam emits from the tailpipe, it may indicate a coolant leak caused by a faulty head gasket, cracked engine block, or cracked cylinder head.

There may be internal leaks that can be determined by removing the oil dipstick. If water globules appear intermixed with the oil it will indicate an internal leak in the engine. If there is an internal leak, the engine must be disassembled for repair.

DIAGNOSIS AND TESTING - COOLING SYSTEM FLOW CHECK

To determine whether coolant is flowing through the cooling system, use one of the following procedures:

PREFERRED METHOD

WARNING: DO NOT REMOVE THE COOLING SYSTEM PRESSURE CAP OR ANY HOSE WITH THE SYSTEM HOT AND UNDER PRESSURE BECAUSE SERIOUS BURNS FROM COOLANT CAN OCCUR.

- Remove pressure cap when engine is cold. Remove small amount of coolant. Idle engine until thermostat opens. You should observe coolant flow while looking down the filler neck. Once flow is detected install the pressure cap. Replace removed coolant into coolant recovery container.

ALTERNATIVE METHOD

- If engine is cold, idle engine until normal operating temperature is reached. Feel the upper radiator hose. If it is hot, coolant is circulating.

COOLING (Continued)

DIAGNOSIS AND TESTING - COOLING SYSTEM AERATION

Low coolant level in a cross flow radiator will equalize in both tanks with engine off. With engine at running and at operating temperature, the high pressure inlet tank runs full and the low pressure outlet tank drops, resulting in cooling system aeration. Aeration will draw air into the water pump resulting in the following:

- High reading shown on the temperature gauge.
- Loss of coolant flow through the heater core.
- Corrosion in the cooling system.
- Water pump seal may run dry, increasing the risk of premature seal failure.
- Combustion gas leaks into the coolant can also cause the above problems.

DIAGNOSIS AND TESTING - COOLING SYSTEM DEAERATION

Air can only be removed from the system by gathering under the pressure cap. On the next heat up it will be pushed past the pressure cap into the coolant recovery bottle by thermal expansion of the coolant. It then escapes to the atmosphere in the coolant recovery bottle and is replaced with coolant on cool down.

To effectively deaerate the system, multiple thermal cycles of the system may be required.

NOTE: Deaeration does not occur at engine idle—higher engine speeds are required. Normal driving will deaerate cooling system.

STANDARD PROCEDURE

STANDARD PROCEDURE - COOLING SYSTEM DRAINING

WARNING: DO NOT REMOVE OR LOOSEN THE COOLANT PRESSURE CAP, CYLINDER BLOCK DRAIN PLUGS, OR THE DRAINCOCK WHEN THE SYSTEM IS HOT AND UNDER PRESSURE BECAUSE SERIOUS BURNS FROM THE COOLANT CAN OCCUR.

(1) **Without removing radiator pressure cap and with system not under pressure**, using a screwdriver, open the draincock. The draincock is located on the lower left side of radiator.

(2) After the coolant recovery/reserve container is empty, then remove coolant pressure cap (Fig. 5).

(3) Remove the cylinder block drain plug(s).

STANDARD PROCEDURE - COOLING SYSTEM FILLING

Remove radiator pressure cap (Fig. 5) and fill system, using a 50/50 mix of Mopar® Antifreeze/Coolant, 5 Year/100,000 Mile Formula and distilled water.

Continue filling system until full. **Be careful not to spill coolant on drive belts or the generator.** For cooling system capacity, (Refer to LUBRICATION & MAINTENANCE/FLUID CAPACITIES - SPECIFICATIONS).

Fill coolant recovery/reserve container (Fig. 5) to at least the MAX mark with 50/50 solution. It may be necessary to add coolant to the recovery/reserve container after three or four warm up/cool down cycles to maintain coolant level between the MAX and MIN mark. This will allow trapped air to be removed from the system.

STANDARD PROCEDURE - ADDING ADDITIONAL COOLANT

The radiator cap should not be removed. When additional coolant is needed to maintain this level, it should be added to the coolant recovery/reserve container (Fig. 5). Use only 50/50 mix of ethylene glycol type antifreeze and distilled water. For the recommeded antifreeze/coolant type (Refer to LUBRICATION & MAINTENANCE/FLUID TYPES - DESCRIPTION).

CAUTION: Do not use well water, or suspect water supply in cooling system. A 50/50 ethylene glycol and distilled water mix is recommended. For the recommeded antifreeze/coolant type (Refer to LUBRICATION & MAINTENANCE/FLUID TYPES - DESCRIPTION).

STANDARD PROCEDURE - COOLANT LEVEL CHECK

NOTE: Do not remove radiator cap for routine coolant level inspections.

The coolant reserve system provides a quick visual method for determining the coolant level without removing the radiator cap. **With the engine cold and not running,** simply observe the level of the coolant in the recovery/reserve container (Fig. 5). The coolant level should be between the MIN and MAX marks.

COOLING (Continued)

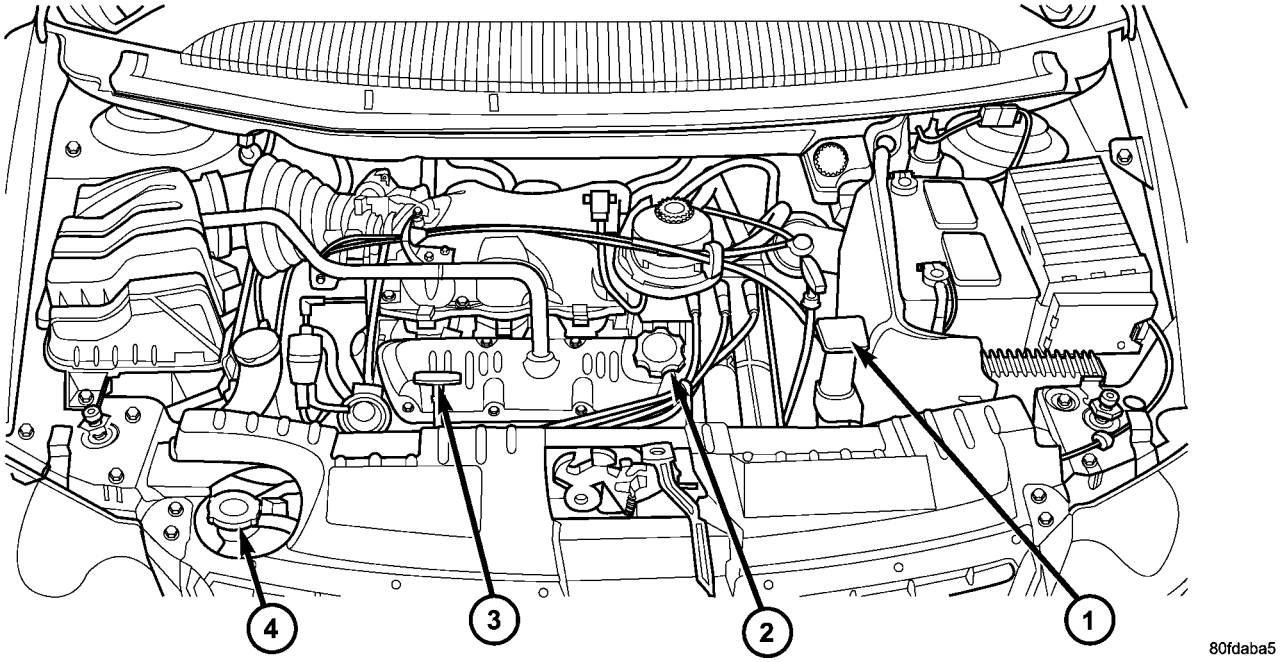

Fig. 5 Cooling System Service Locations

1 - COOLANT RECOVERY CONTAINER
2 - ENGINE OIL FILL CAP
3 - ENGINE OIL LEVEL DIPSTICK
4 - RADIATOR PRESSURE CAP

SPECIFICATIONS

ACCESSORY DRIVE BELT TENSION

ACCESSORY DRIVE BELT		TENSION	
2.4L ENGINE			
Air Conditioning Compressor/ Generator		Dynamic Tensioner	
Power Steering	New Belt	534 - 756 N (120 - 170 lbs.)	178 - 212 Hz
	Used Belt*	356 - 534 N (80 - 120 lbs)	145 - 178 Hz
*Belt is considered used after 15 minutes of run-in time			
3.3/3.8L ENGINES			
Air Conditioning Compressor		Dynamic Tensioner	
Generator/Water Pump/Power Steering			

TORQUE

DESCRIPTION	N·m	Ft. Lbs.	In. Lbs.
Bolt, Accessory Drive Belt Tensioner Assembly (3.3/3.8L)	28	-	250
Engine Coolant Temperature Sensor	7	-	60
Bolt, Generator & A/C Compressor Drive Belt Tensioner Assembly (2.4L)	54	40	-
Bolts, Coolant Outlet Connector/ Thermostat Housing	28	-	250
Bolts, Water Pump	12	-	105
Bolts , Water Pump Inlet Tube (2.4L)	12	-	105
Bolts, Water Pump Inlet Tube (3.3/3.8L)	28	-	250
Bolts, Water Pump Pulley (3.3/3.8L)	28	-	250
Screws, Radiator to A/C Condenser	5	-	45
Screws, Radiator Fan	5	-	45
Nuts, Radiator Mounting (Upper Bracket)	12	-	105

COOLING (Continued)

SPECIAL TOOLS

COOLING SYSTEM

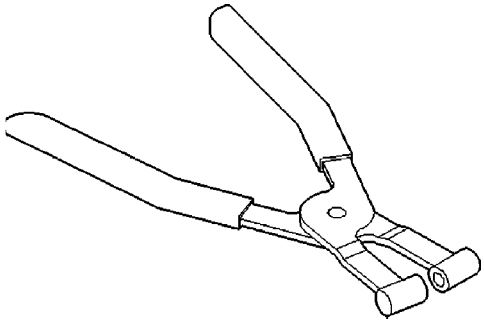

Hose Clamp Pliers 6094

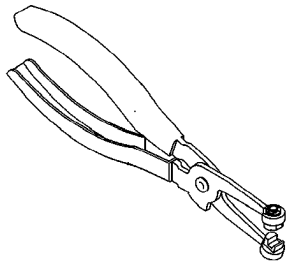

Hose Clamp Pliers 8495A

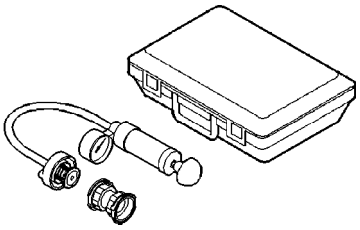

Cooling System Tester 7700

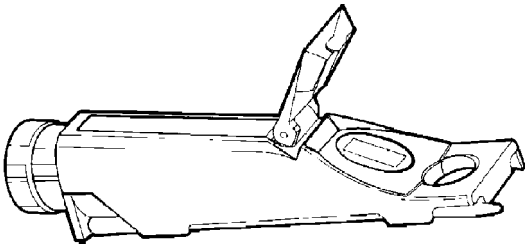

Coolant Refractometer 8286

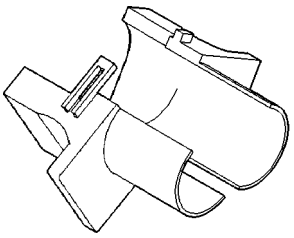

Fig. 6 TOOL 8875A

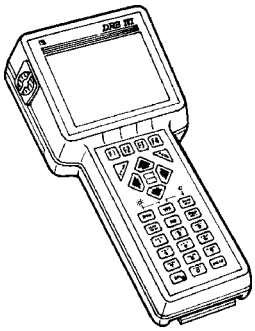

DRB III® with PEP Module – OT-CH6010A

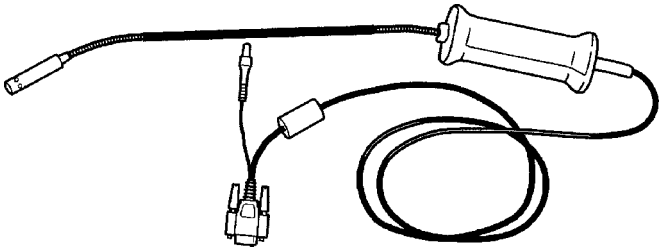

Belt Tension Gauge Adapter 8371

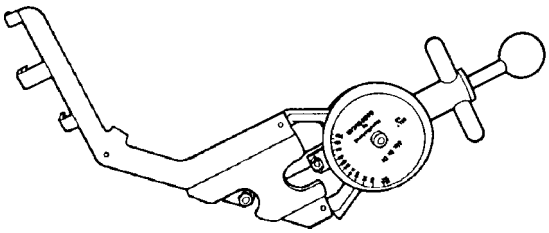

Belt Tension Gauge 7198A

ACCESSORY DRIVE

TABLE OF CONTENTS

page

DRIVE BELTS
DIAGNOSIS AND TESTING - ACCESSORY DRIVE BELT 7
CLEANING 8
INSPECTION 8
DRIVE BELTS - 2.4L
STANDARD PROCEDURE - CHECKING POWER STEERING BELT TENSION 8
REMOVAL 9
INSTALLATION 9
ADJUSTMENTS 10
BELT TENSIONER - 2.4L
REMOVAL 11
INSTALLATION 11
DRIVE BELTS - 3.3/3.8L
REMOVAL 11
INSTALLATION 12
BELT TENSIONER - 3.3/3.8L
REMOVAL 12
INSTALLATION 12

DRIVE BELTS

DIAGNOSIS AND TESTING - ACCESSORY DRIVE BELT

CONDITION	POSSIBLE CAUSES	CORRECTIONS
INSUFFICIENT ACCESSORY OUTPUT DUE TO BELT SLIPPAGE	1. Belt too loose	1. (a) Replace belt (auto-tensioned belts) (b) Adjust power steering belt tension (4 cyl. engine)
	2. Belt excessively glazed or worn	2. Replace and tighten as specified
BELT SQUEAL WHEN ACCELERATING ENGINE	1. Belts too loose	1. (a) Replace belt (auto-tensioned belts) (b) Adjust power steering belt tension (4 cyl. engine)
	2. Belt glazed	2. Replace belts
BELT SQUEAK AT IDLE	1. Belts too loose	1. (a) Replace belt (auto-tensioned belts) (b) Adjust power steering belt tension (4 cyl. engine)
	2. Dirt or paint imbedded in belt	2. Replace belt
	3. Non-uniform belt	3. Replace belt
	4. Misaligned pulleys	4. Align accessories
	5. Non-uniform groove or eccentric pulley	5. Replace pulley

DRIVE BELTS (Continued)

CONDITION	POSSIBLE CAUSES	CORRECTIONS
BELT ROLLED OVER IN GROOVE OR BELT JUMPS OFF	1. Broken cord in belt	1. Replace belt
	2. Belt too loose, or too tight	2. (a) Replace belt (auto-tensioned belts.)
		(b) Adjust power steering belt tension (4 cyl. engine)
	3. Misaligned pulleys	3. Align accessories
	4. Non-uniform groove or eccentric pulley	4. Replace pulley

CLEANING

Clean all foreign debris from belt pulley grooves. The belt pulleys must be free of oil, grease, and coolants before installing the drive belt.

INSPECTION

Belt replacement under any or all of the following conditions is required:

- Excessive wear
- Frayed cords
- Severe glazing

Poly-V Belt system may develop minor cracks across the ribbed side (due to reverse bending). These minor cracks are considered normal and acceptable. Parallel cracks are not (Fig. 1).

NOTE: Do not use any type of belt dressing or restorer on Poly-V Belts.

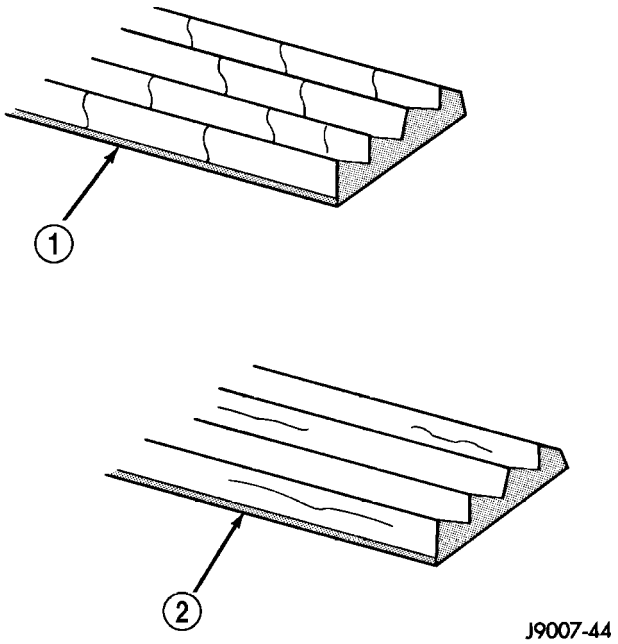

Fig. 1 Drive Belt Inspection

1 - NORMAL CRACKS - BELT OK
2 - NOT NORMAL CRACKS - REPLACE BELT

DRIVE BELTS - 2.4L

STANDARD PROCEDURE - CHECKING POWER STEERING BELT TENSION

WARNING: DO NOT CHECK BELT TENSION WITH ENGINE RUNNING.

Accessory drive belt tension can be measured with Special Tool 8371 – Belt Tension Gauge Adapter, and the DRBIII® using the following procedures:

(1) Connect 8371 to the DRBIII® following the instructions provided with tool.

(2) Place end of microphone probe approximately 2.54 cm (1 in.) from belt at belt center span location shown in (Fig. 2).

(3) Pluck the belt a minimum of 3 times. (Use your finger or other suitable tool) The frequency of the belt in hertz (Hz) will display on DRBIII® screen.

(4) Adjust belt to obtain proper frequency (tension). Refer to ACCESSORY DRIVE BELT TENSION CHART for belt tension specifications.

ACCESSORY DRIVE BELT TENSION CHART - 2.4L

Accessory Drive Belt	Belt Tension	
Air Conditioning Compressor/Generator	Dynamic Tensioner	
Power Steering Pump	New	178 - 212 Hz
	Used*	145 - 178 Hz
*A belt is considered used after 15 minutes of run-in time.		

DRIVE BELTS - 2.4L (Continued)

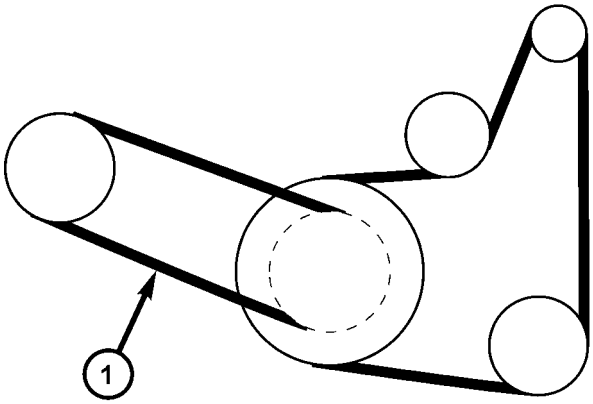

80cad8d9

Fig. 2 Power Steering Belt - Center Span Location

1 - POWER STEERING BELT CENTER SPAN LOCATION

REMOVAL

GENERATOR AND AIR CONDITIONING BELT

(1) Raise vehicle on hoist.
(2) Remove the drive belt shield (Fig. 8).

WARNING: DO NOT ALLOW DRIVE BELT TENSIONER TO SNAP BACK, AS DAMAGE TO TENSIONER AND/OR PERSONAL INJURY COULD RESULT.

(3) Position a wrench on the belt tensioner lug (Fig. 3).
(4) Release belt tension by rotating the tensioner clockwise (Fig. 3).
(5) Remove belt.
(1) Carefully return tensioner to its relaxed position.

POWER STEERING PUMP

(1) From top of the vehicle, loosen locking nuts (1) and (2) (Fig. 4).
(2) From under the vehicle, loosen the pivot bolt (3). Loosen adjusting bolt (4) until belt can be removed.

INSTALLATION

GENERATOR AND AIR CONDITIONING BELT

(1) Install belt onto all pulleys except for the crankshaft (Fig. 5).

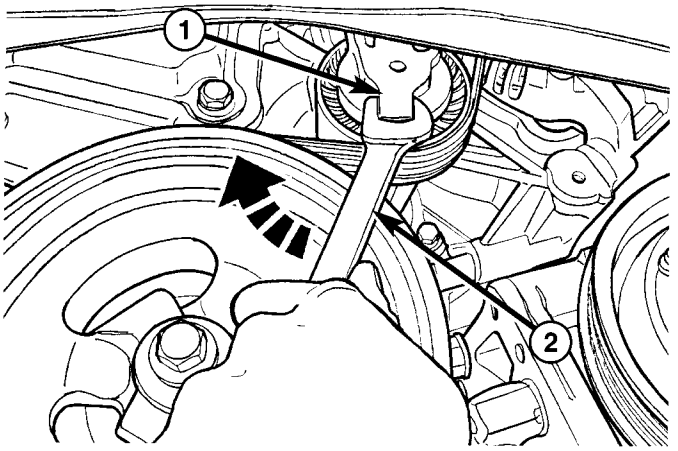

80a85c4b

Fig. 3 A/C & GENERATOR BELT TENSION RELEASE

1 - BELT TENSIONER
2 - WRENCH

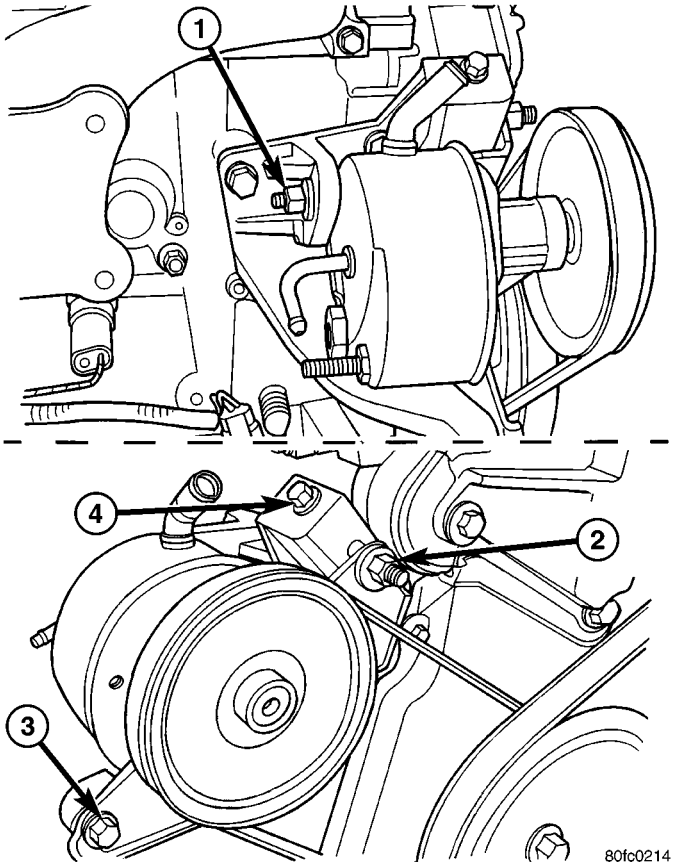

80fc0214

Fig. 4 Power Steering Pump Belt

1 - REAR LOCKING NUT
2 - FRONT LOCKING NUT
3 - PIVOT BOLT
4 - ADJUSTING BOLT

(2) Rotate belt tensioner clockwise until belt can be installed onto the crankshaft pulley (Fig. 3). Slowly release belt tensioner.

DRIVE BELTS - 2.4L (Continued)

(3) Verify belt is properly routed and engaged on all pulleys (Fig. 5).

(4) Install drive belt shield (Fig. 8) and lower vehicle.

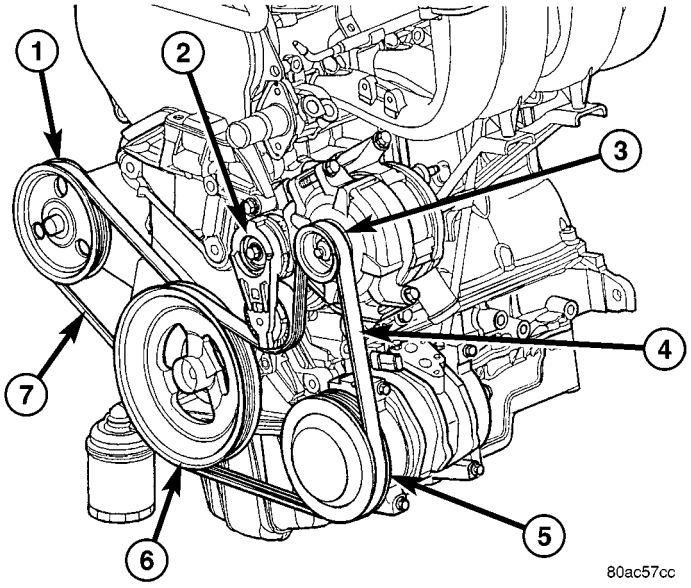

Fig. 5 Accessory Drive Belts - 2.4L

1 - POWER STEERING PUMP PULLEY
2 - BELT TENSIONER
3 - GENERATOR PULLEY
4 - BELT - A/C AND GENERATOR
5 - A/C COMPRESSOR PULLEY
6 - CRANKSHAFT PULLEY
7 - BELT - POWER STEERING

POWER STEERING PUMP

(1) Install belt over crankshaft and power steering pump pulleys (Fig. 5) and (Fig. 6).

(2) Apply an initial snug torque to pivot bolt (3) and front locking nut (2) (Fig. 4).

(3) Tighten adjusting bolt (4) until proper belt tension is obtained (Fig. 4). For belt tension check procedure, (Refer to 7 - COOLING/ACCESSORY DRIVE/ DRIVE BELTS - STANDARD PROCEDURE - CHECKING POWER STEERING BELT TENSION).

(4) Tighten pivot bolt (3) and front locking nut (2) to 54 N·m (40 ft. lbs.) (Fig. 4).

(5) Tighten rear locking nut (1) to 54 N·m (40 ft. lbs.) (Fig. 4).

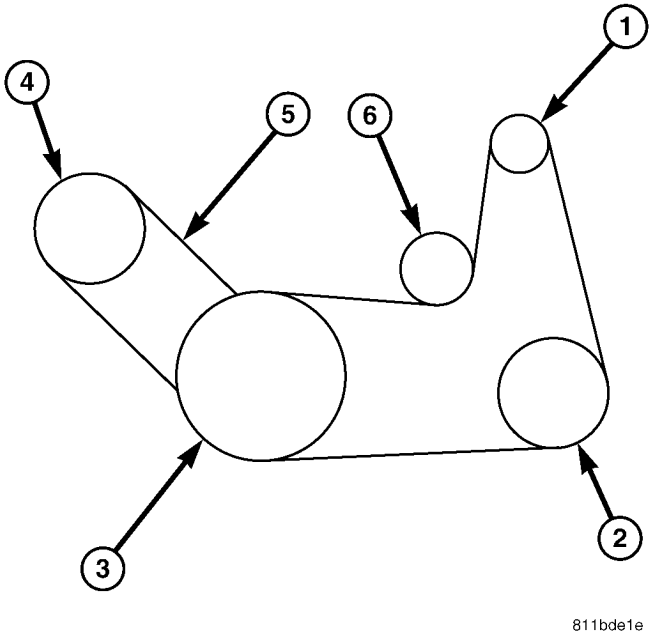

Fig. 6 Belt Routing - 2.4L

1 - GENERATOR PULLEY
2 - A/C COMPRESSOR PULLEY
3 - CRANKSHAFT PULLEY
4 - P/S PUMP PULLEY
5 - P/S PUMP BELT
6 - BELT TENSIONER

ADJUSTMENTS

Satisfactory performance of the belt driven accessories depends on proper belt tension. Belt tensioning should be performed with the aid of Special Tool 7198. Because of space limitations in the engine compartment, the use of this gauge may be restricted. Raise the vehicle on a hoist and the remove the splash shield to gain access to the drive belts, if necessary. Adjust belt tension for either a **New** or **Used** belt. For specifications, (Refer to 7 - COOLING/ACCESSORY DRIVE - SPECIFICATIONS).

BELT TENSIONER - 2.4L

REMOVAL

(1) Raise vehicle on hoist.
(2) Remove the drive belt shield.
(3) Remove the generator/A/C drive belt. (Refer to 7 - COOLING/ACCESSORY DRIVE/DRIVE BELTS - REMOVAL)
(4) Remove the belt tensioner (Fig. 7).

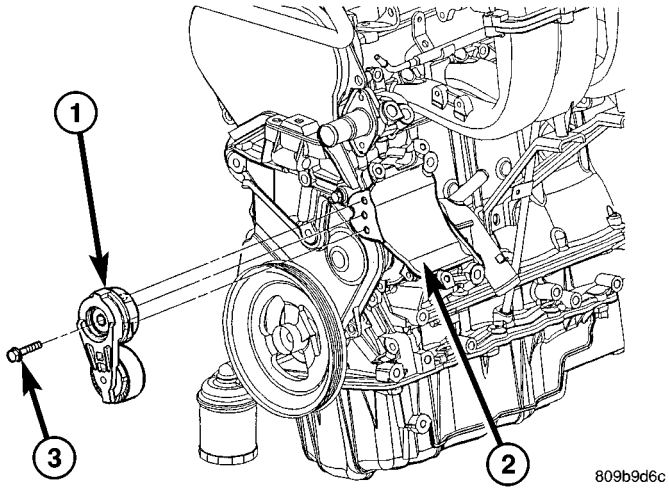

Fig. 7 Belt Tensioner - 2.4L

1 - BELT TENSIONER
2 - GENERATOR BRACKET
3 - BOLT

INSTALLATION

(1) Install belt tensioner and bolt (Fig. 7). Tighten bolt to 54 N·m (40 ft. lbs.).
(2) Install generator/A/C compressor drive belt. (Refer to 7 - COOLING/ACCESSORY DRIVE/DRIVE BELTS - INSTALLATION)
(3) Install splash shield.
(4) Lower the vehicle.

DRIVE BELTS - 3.3/3.8L

REMOVAL

(1) Raise vehicle on hoist.
(2) Remove the drive belt shield (Fig. 8).

WARNING: DO NOT ALLOW DRIVE BELT TENSIONER TO SNAP BACK, AS DAMAGE TO TENSIONER AND/OR PERSONAL INJURY COULD RESULT.

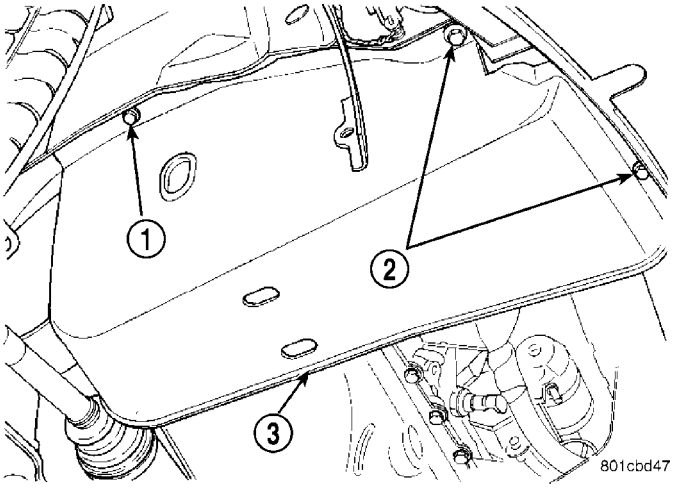

Fig. 8 Accessory Drive Belt Shield

1 - ATTACHING SCREW
2 - ATTACHING SCREWS
3 - SPLASH SHIELD

(3) Position a wrench on the belt tensioner lug (Fig. 9).
(4) Release belt tension by rotating the tensioner counterclockwise (Fig. 9).

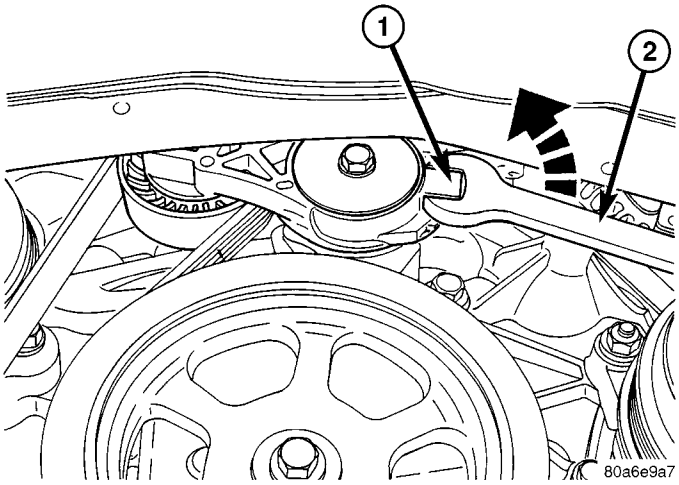

Fig. 9 DRIVE BELT TENSION RELEASE

1 - BELT TENSIONER LUG
2 - WRENCH

(5) Remove the drive belt (Fig. 10).
(6) Carefully return tensioner to its relaxed position.

DRIVE BELTS - 3.3/3.8L (Continued)

INSTALLATION

(1) Route and position the drive belt onto all pulleys, except for the crankshaft (Fig. 10).

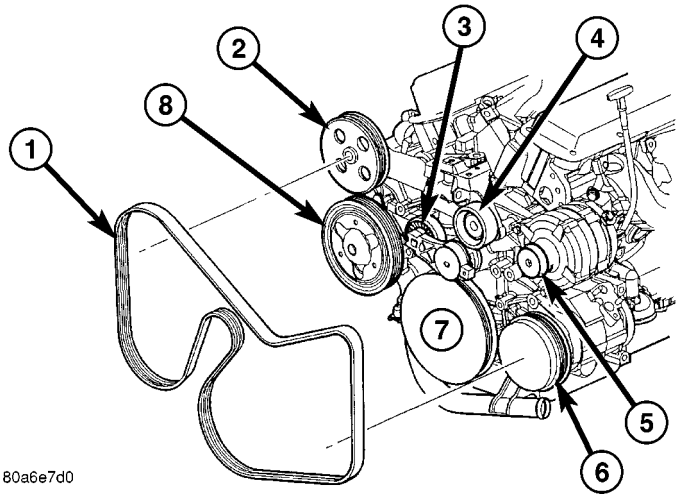

Fig. 10 ACCESSORY DRIVE BELT

1 - DRIVE BELT
2 - POWER STEERING PUMP PULLEY
3 - BELT TENIONER PULLEY
4 - IDLER PULLEY
5 - GENERATOR PULLEY
6 - AIR CONDITIONING COMPRESSOR PULLEY
7 - CRANKSHAFT PULLEY
8 - WATER PUMP PULLEY

(2) Rotate belt tensioner counterclockwise until belt can be installed onto the crankshaft pulley (Fig. 9). Slowly release belt tensioner.

(3) Verify belt is properly routed and engaged on all pulleys (Fig. 11).

(4) Install drive belt shield (Fig. 8) and lower vehicle.

BELT TENSIONER - 3.3/3.8L

REMOVAL

(1) Raise vehicle on hoist.

(2) Remove the drive belt shield.

(3) Remove the drive belt. (Refer to 7 - COOLING/ ACCESSORY DRIVE/DRIVE BELTS - REMOVAL)

(4) Remove the belt tensioner (Fig. 12).

INSTALLATION

(1) Install the belt tensioner and bolt (Fig. 12). Tighten bolt to 28 N·m (250 in. lbs.).

(2) Install the drive belt. (Refer to 7 - COOLING/ ACCESSORY DRIVE/DRIVE BELTS - INSTALLATION)

(3) Install the drive belt shield.

(4) Lower the vehicle.

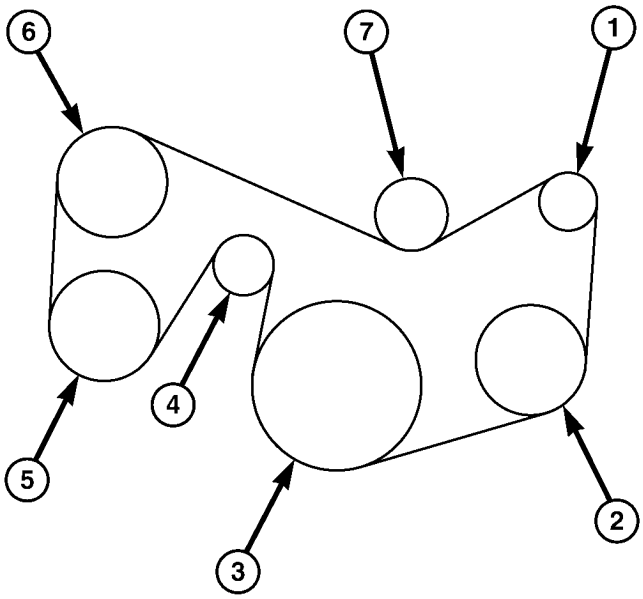

Fig. 11 3.3/3.8L Belt Routing

1 - GENERATOR PULLEY
2 - A/C COMPRESSOR PULLEY
3 - CRANKSHAFT PULLEY
4 - TENSIONER PULLEY
5 - WATER PUMP PULLEY
6 - P/S PUMP PULLEY
7 - IDLER PULLEY

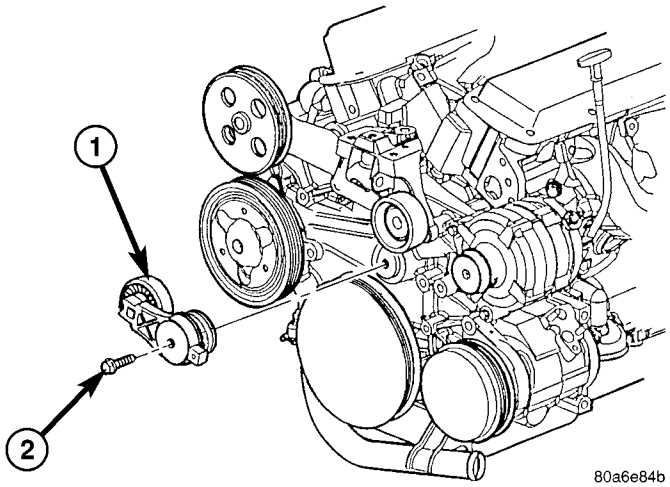

Fig. 12 BELT TENSIONER - 3.3/3.8L

1 - BELT TENSIONER
2 - BOLT

ENGINE

TABLE OF CONTENTS

page

ENGINE
DIAGNOSIS AND TESTING - ENGINE COOLING SYSTEM 14
CLEANING 18
INSPECTION 18
COOLANT
DESCRIPTION - ENGINE COOLANT 19
DIAGNOSIS AND TESTING - COOLANT CONCENTRATION TESTING 19
STANDARD PROCEDURE - COOLANT SERVICE 19
COOLANT RECOVERY CONTAINER
DESCRIPTION 20
OPERATION 20
DIAGNOSIS AND TESTING - COOLANT RECOVERY SYSTEM 20
REMOVAL 20
INSTALLATION 20
ENGINE BLOCK HEATER
DESCRIPTION 20
OPERATION 20
DIAGNOSIS AND TESTING - ENGINE BLOCK HEATER TESTING 21
REMOVAL 21
INSTALLATION 21
ENGINE COOLANT TEMPERATURE SENSOR - 2.4L
DESCRIPTION 21
REMOVAL 21
INSTALLATION 21
ENGINE COOLANT TEMPERATURE SENSOR - 3.3/3.8L
DESCRIPTION 21
REMOVAL 21
INSTALLATION 23
ENGINE COOLANT THERMOSTAT
DESCRIPTION 23
OPERATION 23
DIAGNOSIS AND TESTING - ENGINE COOLANT THERMOSTAT 23
ENGINE COOLANT THERMOSTAT - 2.4L
REMOVAL 24
INSTALLATION 24
ENGINE COOLANT THERMOSTAT - 3.3/3.8L
REMOVAL 24
INSTALLATION 25
RADIATOR
REMOVAL 26

page

INSTALLATION 27
RADIATOR DRAINCOCK
REMOVAL 27
INSTALLATION 27
RADIATOR PRESSURE CAP
DESCRIPTION 27
OPERATION 27
DIAGNOSIS AND TESTING
DIAGNOSIS AND TESTING - COOLING SYSTEM PRESSURE CAP TESTING 28
DIAGNOSIS AND TESTING - RADIATOR CAP TO FILLER NECK SEAL 28
CLEANING 28
INSPECTION 29
RADIATOR FAN
DESCRIPTION 29
OPERATION 29
DIAGNOSIS AND TESTING - RADIATOR FAN MOTOR 30
REMOVAL 30
INSTALLATION 30
RADIATOR FAN RELAY
DESCRIPTION 31
OPERATION 31
REMOVAL 31
INSTALLATION 31
WATER PUMP - 2.4L
DESCRIPTION 32
REMOVAL 32
CLEANING 32
INSPECTION 32
INSTALLATION 32
WATER PUMP - 3.3/3.8L
DESCRIPTION 34
REMOVAL 34
CLEANING 35
INSPECTION 35
INSTALLATION 35
WATER PUMP INLET TUBE - 2.4L
DESCRIPTION 36
REMOVAL 36
INSTALLATION 36
WATER PUMP INLET TUBE - 3.3/3.8L
REMOVAL 37
INSTALLATION 37

ENGINE

DIAGNOSIS AND TESTING - ENGINE COOLING SYSTEM

Establish what driving condition caused the cooling system complaint. The problem may be caused by an abnormal load on the system such as the following: prolonged idle, very high ambient temperature, slight tail wind at idle, slow traffic speed, traffic jam, high speed, steep grade.

DRIVING TECHNIQUES

To avoid overheating the cooling system:

(1) Idle with A/C off when temperature gauge is at end of normal range.

(2) Do not increase engine speed for more air flow and coolant flow because the electric motor fan systems are not responsive to engine RPM. The added cooling from higher coolant flow rate is more than offset by increased heat rejection (engine heat added to coolant).

TRAILER TOWING

Consult the owner's manual under Trailer Towing and do not exceed specified limits.

VISUAL INSPECTION

If the cooling system problem is not caused by a driving condition, perform a visual inspection to determine if there was a recent service or accident repair, including the following:

- Loose/damaged water pump drive belt
- Incorrect cooling system refilling (trapped air or low level)
- Brakes possibly dragging
- Damaged hoses
- Loose/damaged hose clamps
- Damaged/incorrect engine thermostat
- Damaged cooling fan motor, fan blade and fan shroud
- Damaged head gasket
- Damaged water pump
- Damaged radiator
- Damaged coolant recovery system
- Damaged heater core
- Open/shorted electrical circuits

If the visual inspection reveals none of the above as cause for a cooling system complaint, refer to the following diagnostic charts.

COOLING SYSTEM DIAGNOSIS CHART

CONDITION	POSSIBLE CAUSES	CORRECTION
PRESSURE CAP IS BLOWING OFF STEAM AND/OR COOLANT. TEMPERATURE GAUGE READING MAY BE ABOVE NORMAL BUT NOT HIGH. COOLANT LEVEL MAY BE HIGH IN COOLANT RESERVE/ OVERFLOW TANK.	1. Pressure relief valve in radiator cap is defective, or was not properly seated.	1. Check condition of radiator cap and cap seal. (Refer to 7 - COOLING/ENGINE/RADIATOR PRESSURE CAP - DIAGNOSIS AND TESTING) Replace cap as necessary.
	2. Incorrect cap was installed.	2. Replace cap as necessary.
	3. Incorrect coolant mixture.	3. Check concentration level of the coolant. (Refer to 7 - COOLING/ ENGINE/COOLANT - DIAGNOSIS AND TESTING) Adjust the ethylene glycol-to-water ratio as required.
COOLANT LOSS TO THE GROUND WITHOUT PRESSURE CAP BLOWOFF. GAUGE IS READING HIGH OR HOT.	1. Coolant leaks in radiator, cooling system hoses, water pump or engine.	1. Pressure test and repair as necessary. (Refer to 7 - COOLING - DIAGNOSIS AND TESTING)

ENGINE (Continued)

CONDITION	POSSIBLE CAUSES	CORRECTION
DETONATION OR PRE-IGNITION (NOT CAUSED BY IGNITION SYSTEM). GAUGE MAY NOT BE READING HIGH.	1. Engine overheating.	1. Check reason for overheating and repair as necessary.
	2. Freeze point of coolant not correct. Mixture too concentrated or too diluted.	2. Check concentration level of the coolant. (Refer to 7 - COOLING/ ENGINE/COOLANT - DIAGNOSIS AND TESTING) Adjust the ethylene glycol-to-water ratio as required.
	3. Incorrect cooling system pressure cap.	3. Install correct pressure cap.
HOSE(S) COLLAPSE AS ENGINE COOLS DOWN.	1. Vacuum created in cooling system on engine cool-down is not being relieved through coolant recovery system.	1. (a) Pressure cap relief valve stuck. (Refer to 7 - COOLING/ ENGINE/RADIATOR PRESSURE CAP - DIAGNOSIS AND TESTING) Replace as necessary. (b) Hose between the radiator and overflow container is plugged or pinched. Clean and repair as necessary. (c) Vent at coolant reserve/overflow container is plugged. Clean vent and repair as necessary. (d) Reserve/overflow container is internally blocked. Clean and repair as necessary.
INADEQUATE AIR CONDITIONER PERFORMANCE (COOLING SYSTEM SUSPECTED).	1. Radiator and/or A/C condenser is restricted, obstructed, or dirty (insects, leaves, etc.).	1. Remove restriction and/or clean as necessary.
	2. Electrical radiator fan not operating when A/C is operated.	2. For test procedure (Refer to appropriate Diagnostic Information). Repair as necessary.
	3. Engine is overheating (heat may be transferred from radiator to A/C condenser). High underhood temperatures due to engine overheating may also transfer heat to A/C components.	3. Correct overheating condition.
	4. All models are equipped with air seals at the radiator and/or A/C condenser. If these seals are missing or damaged, not enough air flow will be pulled through the radiator and A/C condenser.	4. Check for missing or damaged air seals and repair as necessary.
INADEQUATE HEATER PERFORMANCE.	1. Check for a Diagnostic trouble code (DTC).	1. For procedures, (Refer to appropriate Diagnostic Information). Repair as necessary.
	2. Coolant level low.	2. (Refer to 7 - COOLING - STANDARD PROCEDURE) Repair as necessary.

ENGINE (Continued)

CONDITION	POSSIBLE CAUSES	CORRECTION
	3. Obstructions in heater hose fitting at engine or at heater core.	3. Remove heater hoses at both ends and check for obstructions. Repair as necessary.
	4. Heater hose kinked.	4. Locate kinked area and repair as necessary.
	5. Water pump is not pumping coolant to heater core.	5. When the engine is fully warmed up, both heater hoses should be hot to the touch. If only one of the hoses is hot, the water pump may not be operating correctly. Replace components as necessary.
	6. Air trapped in heater core.	6. (Refer to 7 - COOLING - DIAGNOSIS AND TESTING - COOLING SYSTEM DEAERATION)
HEAT ODOR	1. Various heat shields are used at certain driveline components. One or more of these shields may be missing.	1. Locate missing shields and replace or repair as necessary.
	2. Temperature gauge reading above the normal range.	2. Refer to Gauge Is Reading High in Temperature Gauge Indicatication Diagnosis Chart.
	3. Radiator fan operating incorrectly.	3. (Refer to 7 - COOLING/ENGINE/ RADIATOR FAN - OPERATION) Repair as necessary.
	4. Undercoating been applied to an unnecessary component.	4. Clean undercoating as necessary.
	5. Engine may be running rich, causing the catalytic converter to overheat	5. (Refer to Appropriate Diagnostic Information) Repair as necessary.
POOR DRIVEABILITY (THERMOSTAT POSSIBLY STUCK OPEN). GAUGE MAY BE READING LOW.	1. The engine thermostat must be operating correctly for proper driveability, clean vehicle emissions, and the prevention of sludge buildup in the engine oil. Check for a diagnostic trouble code.	1. (Refer to Appropriate Diagnostic Information) Replace thermostat, if necessary.
STEAM IS COMING FROM FRONT OF VEHICLE NEAR GRILL AREA WHEN WEATHER IS WET, ENGINE WARMED UP AND RUNNING WITH VEHICLE STATIONARY, OR JUST SHUT OFF. TEMPERATURE GAUGE IS NORMAL.	1. During wet weather, moisture (snow, ice, rain, or condensation) on the radiator will evaporate when the thermostat opens. The thermostat opening allows heated coolant into the radiator. When the moisture contacts the hot radiator, steam may be emitted. This usually occurs in cold weather with no fan or air flow to blow it away.	1. Occasional steam emitting from this area is normal. No repair is necessary.

ENGINE (Continued)

CONDITION	POSSIBLE CAUSES	CORRECTION
COOLANT COLOR	1. Coolant color is not necessarily an indication of adequate corrosion or temperature protection. Do not rely on coolant color for determining condition of coolant.	1. Check the freeze point of the coolant. (Refer to 7 - COOLING/ ENGINE/COOLANT - DIAGNOSIS AND TESTING) Adjust the ethylene glycol-to-water ratio as necessary.
COOLANT LEVEL CHANGES IN COOLANT BOTTLE. TEMPERATURE GAUGE IS IN NORMAL RANGE.	1. Level changes are to be expected as coolant volume fluctuates with engine temperature. The coolant level will also drop as the system removes air from a recent filling.	1. A normal condition. No repair is necessary.

Refer to (Fig. 1) when using the TEMPERATURE GAUGE INDICATION DIAGNOSIS CHART.

TEMPERATURE GAUGE INDICATION DIAGNOSIS CHART

CONDITION	POSSIBLE CAUSES	CORRECTION
TEMPERATURE GAUGE READING IS INCONSISTENT (FLUCTUATES, CYCLES OR IS ERRATIC).	1. Normal reaction to fan and/or thermostat cycle (Fig. 1), Examples B and C. During cold weather operation with the heater blower in the high position, the gauge reading may drop slightly (Fig. 1), Example D. Fluctuation is also influenced by outside temperature and heavy loads (Fig. 1), Example E.	1. A normal condition. No correction is necessary.
	2. Gauge reading rises when vehicle is brought to a stop after heavy use (engine still running) (Fig. 1), Example F.	2. A normal condition. No correction is necessary. Gauge reading should return to normal range (Fig. 1), Example A, after vehicle is driven.
	3. Gauge reading high after restarting a warmed-up (hot) engine.	3. A normal condition. No correction is necessary. The gauge should return to normal range (Fig. 1), Example A, after a few minutes of engine operation.
	4. Temperature gauge or engine coolant temperature sensor defective or shorted. Also, corroded or loose wiring in the electrical circuit.	4. Check operation of gauge or engine coolant temperature sensor and repair, if necessary.

ENGINE (Continued)

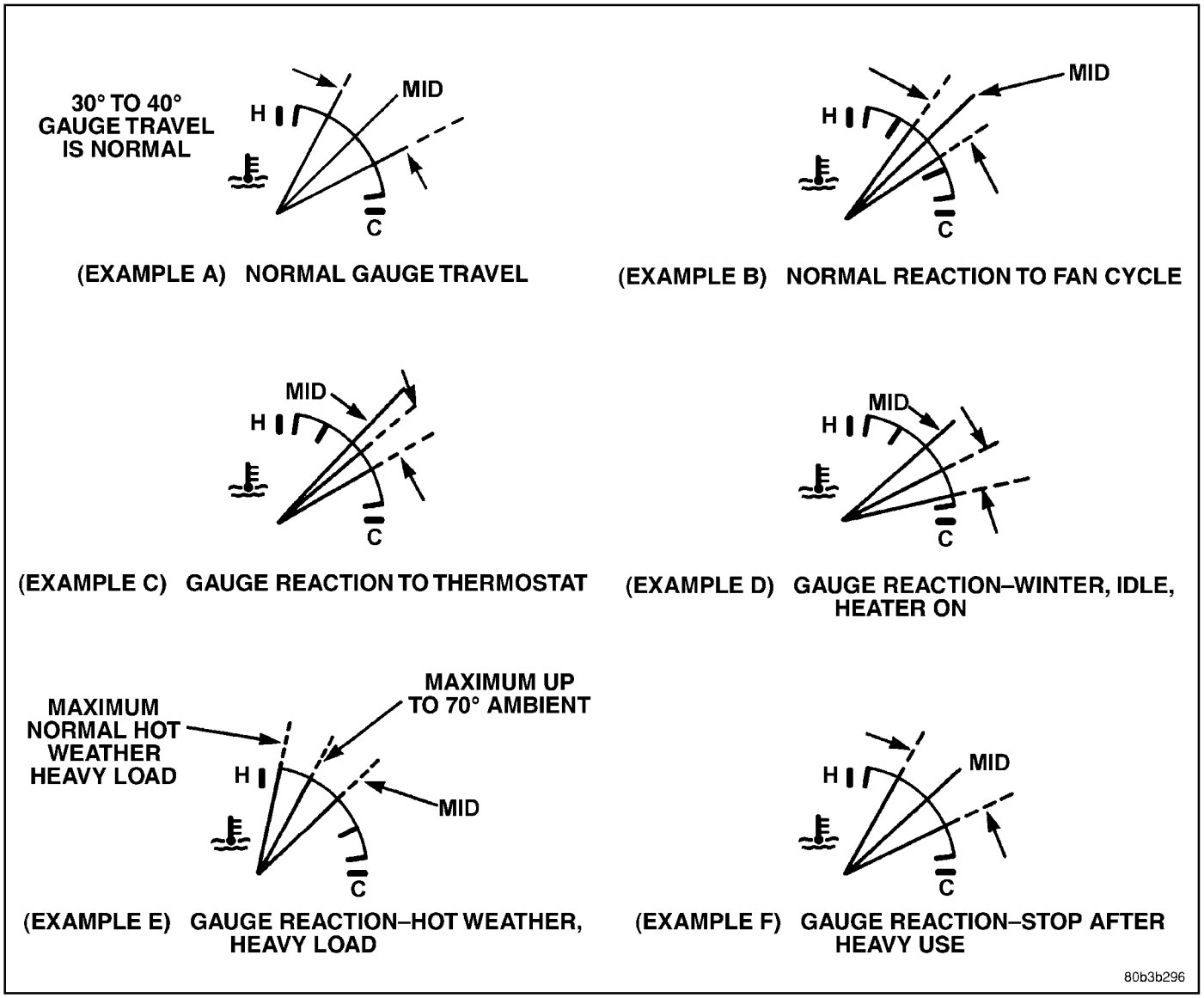

Fig. 1 Temperature Gauge Indications

CLEANING

Drain cooling system and refill with clean water. Refer to drain and fill procedures in this section. Run engine with radiator cap installed until upper radiator hose is hot. Stop engine and drain water from system. If water is dirty; fill, run, and drain system again, until water runs clear. Refill cooling system with a 50/50 mixture of the recommended ethylene glycol and distilled water (Refer to LUBRICATION & MAINTENANCE/FLUID TYPES - DESCRIPTION).

INSPECTION

After performing a cleaning/flush procedure, inspect all hoses, clamps and connections for deterioration and leaks. Inspect radiator and heater core for leaks.

COOLANT

DESCRIPTION - ENGINE COOLANT

WARNING: ANTIFREEZE IS AN ETHYLENE GLYCOL BASE COOLANT AND IS HARMFUL IF SWALLOWED OR INHALED. IF SWALLOWED, DRINK TWO GLASSES OF WATER AND INDUCE VOMITING. IF INHALED, MOVE TO FRESH AIR AREA. SEEK MEDICAL ATTENTION IMMEDIATELY. DO NOT STORE IN OPEN OR UNMARKED CONTAINERS. WASH SKIN AND CLOTHING THOROUGHLY AFTER COMING IN CONTACT WITH ETHYLENE GLYCOL. KEEP OUT OF REACH OF CHILDREN. DISPOSE OF GLYCOL BASE COOLANT PROPERLY, CONTACT YOUR DEALER OR GOVERNMENT AGENCY FOR LOCATION OF COLLECTION CENTER IN YOUR AREA. DO NOT OPEN A COOLING SYSTEM WHEN THE ENGINE IS AT OPERATING TEMPERATURE OR HOT UNDER PRESSURE, PERSONAL INJURY CAN RESULT. AVOID RADIATOR COOLING FAN WHEN ENGINE COMPARTMENT RELATED SERVICE IS PERFORMED, PERSONAL INJURY CAN RESULT.

CAUTION: Use of Propylene Glycol based coolants is not recommended, as they provide less freeze protection and less boiling protection.

The cooling system is designed around the coolant. The coolant must accept heat from engine metal, in the cylinder head area near the exhaust valves and engine block. Then coolant carries the heat to the radiator where the tube/fin radiator can transfer the heat to the air.

The use of aluminum cylinder blocks, cylinder heads, and water pumps requires special corrosion protection. Mopar® Antifreeze/Coolant, 5 Year/100,000 Mile Formula (MS-9769), or the equivalent ethylene glycol base coolant with hybrid organic corrosion inhibitors (called HOAT, for Hybrid Organic Additive Technology) is recommended. This coolant offers the best engine cooling without corrosion when mixed with 50% Ethylene Glycol and 50% distilled water to obtain a freeze point of -37°C (-35°F). If it loses color or becomes contaminated, drain, flush, and replace with fresh properly mixed coolant solution.

The green coolant **MUST NOT BE MIXED** with the orange or magenta coolants. When replacing coolant the complete system flush must be performed before using the replacement coolant.

CAUTION: Mopar® Antifreeze/Coolant, 5 Year/100,000 Mile Formula (MS-9769) may not be mixed with any other type of antifreeze. Doing so will reduce the corrosion protection and may result in premature water pump seal failure. If non-HOAT coolant is introduced into the cooling system in an emergency, it should be replaced with the specified coolant as soon as possible.

DIAGNOSIS AND TESTING - COOLANT CONCENTRATION TESTING

Coolant concentration should be checked when any additional coolant was added to system or after a coolant drain, flush and refill. The coolant mixture offers optimum engine cooling and protection against corrosion when mixed to a freeze point of -37°C (-34°F) to -46°C (-50°F). The use of a hydrometer or a refractometer can be used to test coolant concentration.

A hydrometer will test the amount of glycol in a mixture by measuring the specific gravity of the mixture. The higher the concentration of ethylene glycol, the larger the number of balls that will float, and higher the freeze protection (up to a maximum of 60% by volume glycol).

A refractometer (Special Tool 8286)(Refer to 7 - COOLING - SPECIAL TOOLS) will test the amount of glycol in a coolant mixture by measuring the amount a beam of light bends as it passes through the fluid.

Some coolant manufactures use other types of glycols into their coolant formulations. Propylene glycol is the most common new coolant. However, propylene glycol based coolants do not provide the same freezing protection and corrosion protection and is not recommended.

CAUTION: Do not mix types of coolant—corrosion protection will be severely reduced.

STANDARD PROCEDURE - COOLANT SERVICE

For engine coolant recommended service schedule, (Refer to LUBRICATION & MAINTENANCE/MAINTENANCE SCHEDULES - DESCRIPTION).

COOLANT RECOVERY CONTAINER

DESCRIPTION

The coolant recovery/reserve system container is mounted in the engine compartment (Fig. 2). The container is made of plastic.

OPERATION

The coolant recovery system works with the radiator pressure cap to use thermal expansion and contraction of the coolant to keep the coolant free of trapped air. Provides a convenient and safe method for checking coolant level and adjusting level at atmospheric pressure without removing the radiator pressure cap. It also provides reserve coolant to cover deaeration, evaporation, or boiling losses.

DIAGNOSIS AND TESTING - COOLANT RECOVERY SYSTEM

The cooling system is closed and designed to maintain coolant level to the top of the radiator.

(1) With the engine **off** and cooling system **not** under pressure, drain several ounces of coolant from the radiator draincock while observing the coolant recovery container. Coolant level in the container should drop.

(2) Remove the radiator pressure cap. The coolant level should be full to the top radiator neck. If not, and the coolant level in the container is at or above the MIN mark, there is an air leak in the coolant recovery system.

(3) Check hose and hose connections to the container, radiator filler neck or the pressure cap seal to the radiator filler neck for leaks.

REMOVAL

(1) Raise the vehicle on hoist.

(2) Remove the lower attaching screws (Fig. 2).

(3) Lower the vehicle.

(4) Remove the upper attaching screw (Fig. 2).

(5) Disconnect recovery hose from container (Fig. 2).

(6) Remove the recovery container.

INSTALLATION

(1) Connect the recovery hose to container (Fig. 2).

(2) Position the recovery container on the frame rail (Fig. 2).

(3) Install the upper attaching screw and tighten to 7 N·m (60 in. lbs.) (Fig. 2).

(4) Raise the vehicle on hoist.

(5) Install the lower attaching screws and tighten to 8.5 N·m (75 in. lbs.) (Fig. 2).

(6) Lower the vehicle.

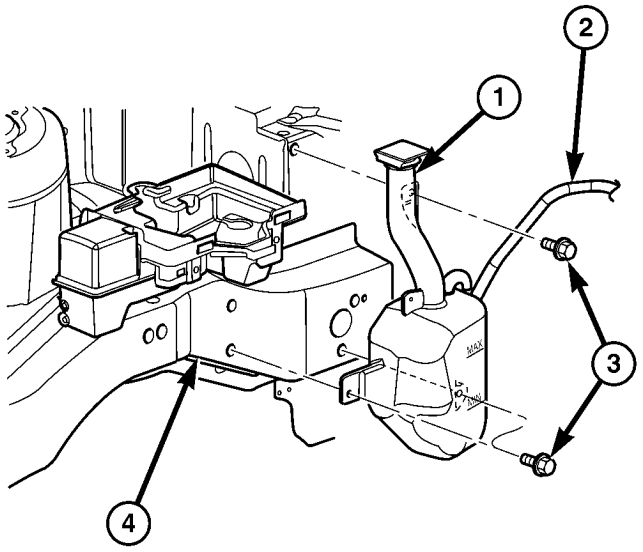

Fig. 2 Coolant Recovery Container

1 - COOLANT RECOVERY CONTAINER
2 - HOSE
3 - BOLT
4 - SUB FRAME RAIL

(7) Add coolant to container as necessary. (Refer to 7 - COOLING - STANDARD PROCEDURE)

ENGINE BLOCK HEATER

DESCRIPTION

The engine block heater is available as an optional accessory on all models. The heater is operated by ordinary house current (110 Volt A.C.) through a power cord located behind the radiator grille. This provides easier engine starting and faster warm-up when vehicle is operated in areas having extremely low temperatures. The heater is mounted in a core hole (in place of a core hole plug) in the engine block, with the heating element immersed in coolant.

OPERATION

The block heater element is submerged in the cooling system's coolant. When electrical power (110 volt A.C.) is applied to the element, it creates heat. This heat is transferred to the engine coolant. This provides easier engine starting and faster warm-up when vehicle is operated in areas having extremely low temperatures.

ENGINE BLOCK HEATER (Continued)

DIAGNOSIS AND TESTING - ENGINE BLOCK HEATER TESTING

If unit does not operate, trouble can be in either the power cord or the heater element. Test power cord for continuity with a 110-volt voltmeter or 110-volt test light; test heater element continuity with an ohmmeter or 12-volt test light.

REMOVAL

(1) Drain coolant from radiator and cylinder block. (Refer to 7 - COOLING - STANDARD PROCEDURE)
(2) Disconnect the power cord plug from heater.
(3) Loosen screw in center of heater. Remove the heater assembly.

INSTALLATION

(1) Clean block core hole and heater seat.
(2) Insert heater assembly with element loop positioned **upward.**
(3) With heater seated, tighten center screw securely to assure a positive seal.
(4) Install power cord plug to heater.
(5) Fill cooling system with coolant to the proper level. (Refer to 7 - COOLING - STANDARD PROCEDURE)

ENGINE COOLANT TEMPERATURE SENSOR - 2.4L

DESCRIPTION

The engine coolant temperature sensor threads into the top of the thermostat housing (Fig. 3). New sensors have sealant applied to the threads.

REMOVAL

WARNING: HOT, PRESSURIZED COOLANT CAN CAUSE INJURY BY SCALDING. COOLING SYSTEM MUST BE PARTIALLY DRAINED BEFORE REMOVING THE COOLANT TEMPERATURE SENSOR.

(1) Drain the cooling system below thermostat level. (Refer to 7 - COOLING - STANDARD PROCEDURE)
(2) Disconnect coolant temperature sensor electrical connector.
(3) Remove coolant temperature sensor (Fig. 3).

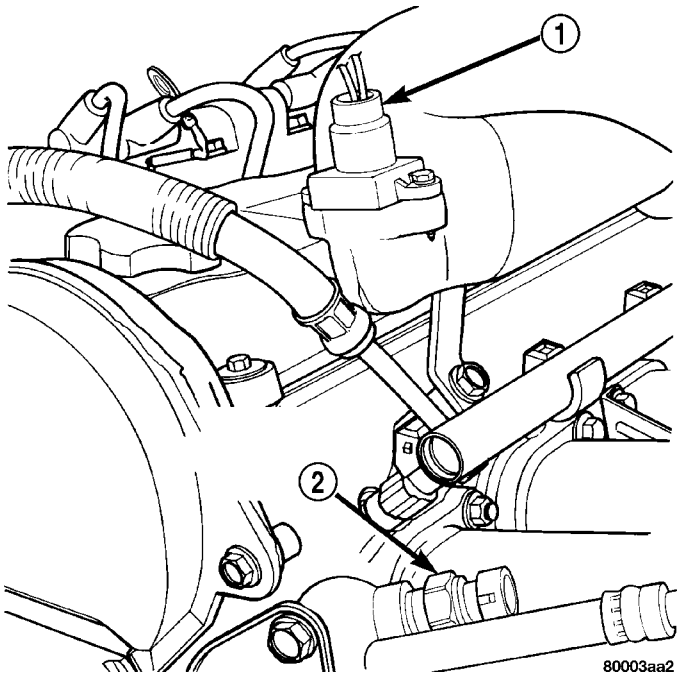

Fig. 3 Engine Coolant Temperature Sensor - 2.4L

1 - MAP SENSOR
2 - COOLANT TEMPERATURE SENSOR

INSTALLATION

(1) Install coolant temperature sensor (Fig. 3). Tighten sensor to 7 N·m (60 in. lbs.).
(2) Connect electrical connector to sensor.
(3) Fill cooling system. (Refer to 7 - COOLING - STANDARD PROCEDURE)

ENGINE COOLANT TEMPERATURE SENSOR - 3.3/3.8L

DESCRIPTION

The engine coolant temperature sensor threads into a coolant passage on lower intake manifold near the thermostat (Fig. 6). New sensors have sealant applied to the threads.

REMOVAL

WARNING: HOT, PRESSURIZED COOLANT CAN CAUSE INJURY BY SCALDING. COOLING SYSTEM MUST BE PARTIALLY DRAINED BEFORE REMOVING THE COOLANT TEMPERATURE SENSOR.

ENGINE COOLANT TEMPERATURE SENSOR - 3.3/3.8L (Continued)

(1) Drain cooling system below engine coolant temperature sensor level. (Refer to 7 - COOLING - STANDARD PROCEDURE)

(2) Remove power steering reservoir and relocate (Fig. 4). Do not disconnect hoses.

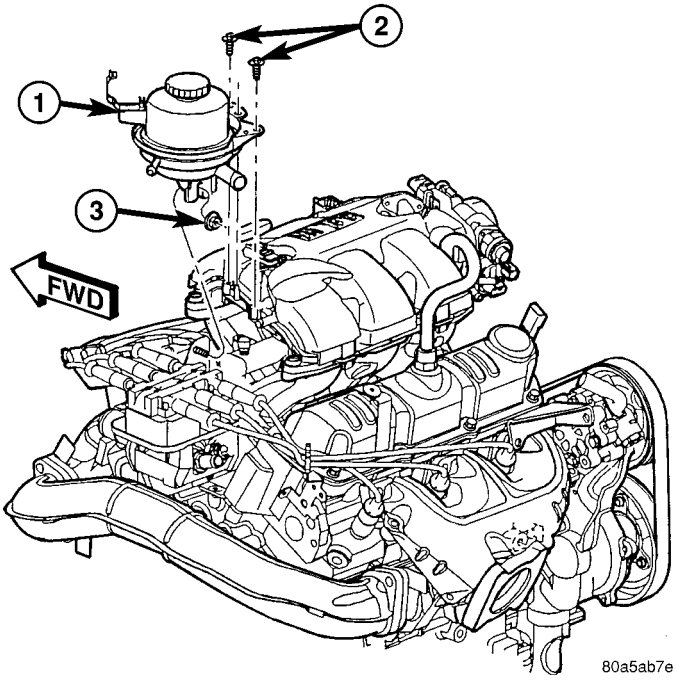

Fig. 4 Power Steering Fluid Reservoir

1 - POWER STEERING RESERVOIR
2 - BOLT - RESERVOIR TO MANIFOLD
3 - NUT - RESERVOIR TO COIL BRACKET

(3) Remove ignition coil and bracket (Fig. 5).

(4) Disconnect coolant sensor electrical connector (Fig. 6).

(5) Remove coolant sensor (Fig. 6).

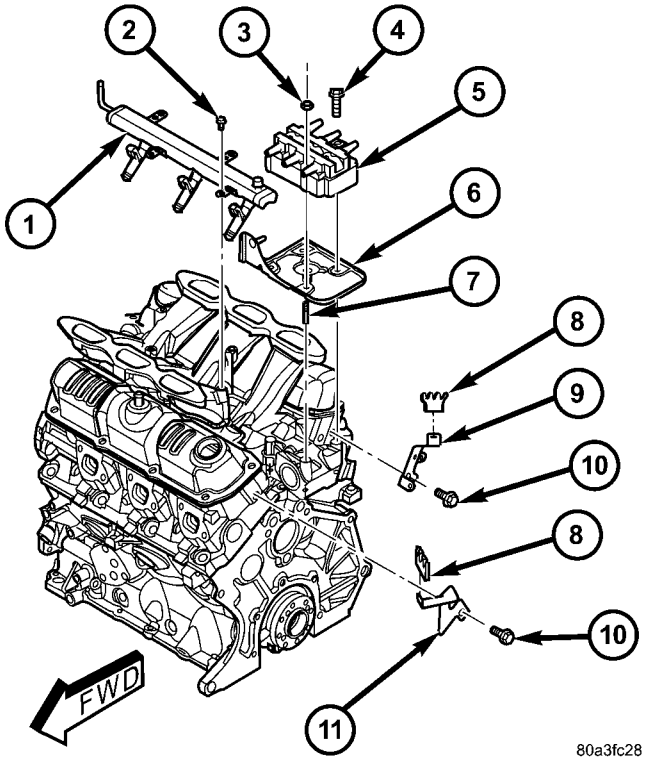

Fig. 5 Fuel Rail, Ignition Coil and Bracket

1 - FUEL RAIL
2 - BOLT - FUEL RAIL
3 - NUT - IGNITION COIL
4 - BOLT - IGNITION COIL
5 - IGNITION COIL
6 - BRACKET - IGNITION COIL
7 - STUD - IGNITION COIL
8 - SEPARATOR - SPARK PLUG CABLE
9 - BRACKET - SPARK PLUG CABLE SEPARATOR
10 - BOLT - SEPARATOR BRACKET
11 - BRACKET - SPARK PLUG CABLE SEPARATOR

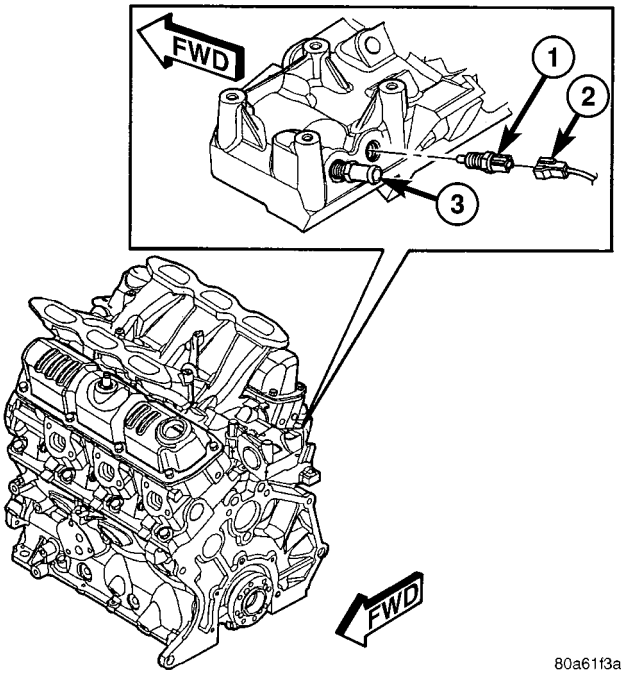

Fig. 6 Engine Coolant Temperature Sensor

1 - ENGINE COOLANT TEMPERATURE SENSOR
2 - CONNECTOR - ENGINE COOLANT SENSOR
3 - FITTING - HEATER SUPPLY

INSTALLATION

(1) Install engine coolant temperature sensor (Fig. 6). Tighten sensor to 7 N·m (60 in. lbs.).
(2) Connect electrical connector to sensor (Fig. 6).
(3) Install ignition coil bracket (Fig. 5).
(4) Install ignition coil (Fig. 5).
(5) Install power steering reservoir (Fig. 4).
(6) Fill cooling system. (Refer to 7 - COOLING - STANDARD PROCEDURE)

ENGINE COOLANT THERMOSTAT

DESCRIPTION

The engine cooling thermostats are a wax pellet driven, reverse poppet choke type. The thermostat is mounted in a housing on the coolant outlet of the engine (Fig. 8) or (Fig. 10).

OPERATION

The engine cooling thermostat is a wax pellet driven, reverse poppet choke type. The thermostat is designed to provide the fastest warm up possible by preventing leakage through it and to guarantee a minimum engine operating temperature of 88 to 93°C (192 to 199°F). The thermostat also will automatically reach wide open so it will not restrict flow to the radiator as temperature of the coolant rises in hot weather to around 104°C (220°F). Above this temperature the coolant temperature is controlled by the radiator, fan, and ambient temperature, not the thermostat.

The thermostat is operated by a wax filled container (pellet) which is sealed. When heated coolant reaches a predetermined temperature, the wax expands enough to overcome the closing spring and water pump pressure, which forces the valve to open.

DIAGNOSIS AND TESTING - ENGINE COOLANT THERMOSTAT

The thermostat is operated by a wax filled chamber (pellet) which is sealed. When heated coolant reaches a predetermined temperature the wax pellet expands enough to overcome the closing spring and water pump pressure, which forces the valve to open. Coolant leakage into the pellet will cause a thermostat to fail open. Do not attempt to free up a thermostat with a screwdriver.

Thermostat diagnostics is included in powertrain control module's (PCM) programing for on-board diagnosis. The malfunction indicator light (MIL) will illuminate and a diagnostic trouble code (DTC) will be set when an “open too soon” condition occurs. Do not change a thermostat for lack of heater performance or temperature gauge position, unless a DTC is present. For other probable causes, (Refer to 7 - COOLING/ENGINE - DIAGNOSIS AND TESTING). Thermostat failing shut is the normal long term mode of failure, and normally, only on high mileage vehicles. The temperature gauge will indicate this (Refer to 7 - COOLING/ENGINE - DIAGNOSIS AND TESTING).

ENGINE COOLANT THERMOSTAT - 2.4L

REMOVAL

(1) Drain cooling system below the thermostat level. (Refer to 7 - COOLING - STANDARD PROCEDURE)

(2) Remove radiator upper hose from the coolant outlet housing (Fig. 7).

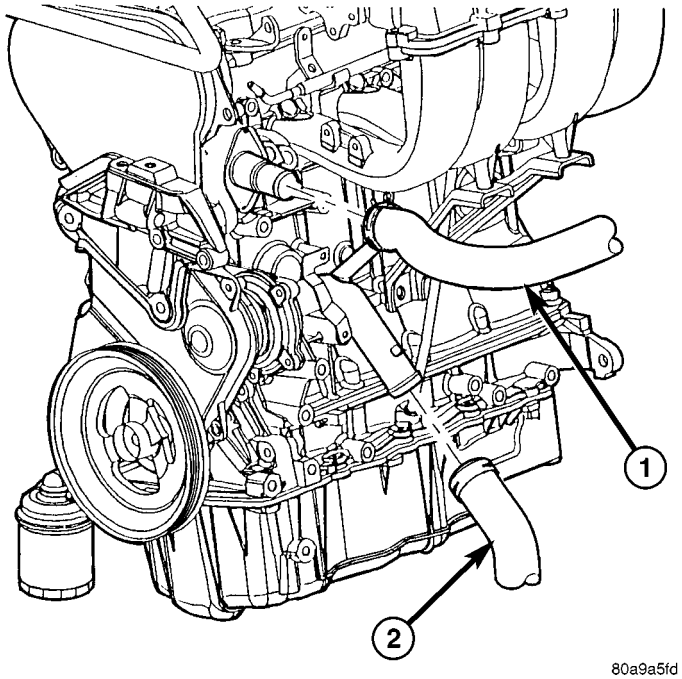

Fig. 7 RADIATOR HOSES TO ENGINE - 2.4L

1 - UPPER HOSE
2 - LOWER HOSE

(3) Remove coolant outlet housing bolts and housing (Fig. 8).

(4) Remove thermostat. Discard gasket and clean both gasket sealing surfaces.

INSTALLATION

(1) Place a new gasket (dipped in clean water) on the coolant outlet connector surface. Position thermostat with air bleed at the 12 o'clock position in thermostat housing (Fig. 8).

(2) Position the coolant outlet connector and gasket over the thermostat, making sure thermostat is seated in the thermostat housing.

(3) Position outlet connector to thermostat housing and install bolts (Fig. 8). Tighten bolts to 28 N·m (250 in. lbs.).

(4) Install the radiator upper hose to coolant outlet housing (Fig. 7).

(5) Refill the cooling system. (Refer to 7 - COOLING - STANDARD PROCEDURE)

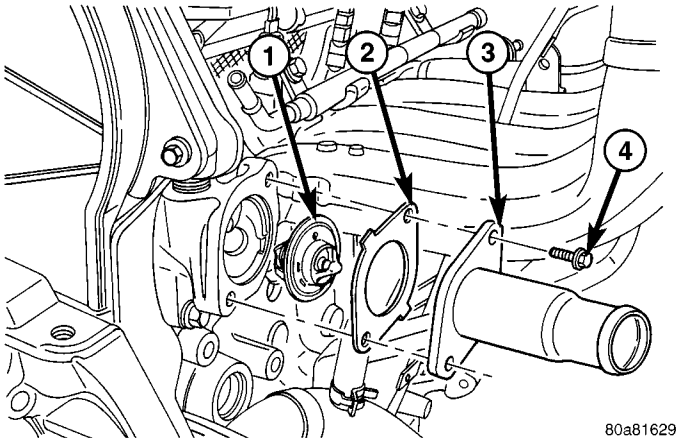

Fig. 8 Thermostat and Outlet Connector - 2.4L Engine

1 - THERMOSTAT
2 - GASKET
3 - COOLANT OUTLET CONNECTOR
4 - BOLT

ENGINE COOLANT THERMOSTAT - 3.3/3.8L

REMOVAL

(1) Drain cooling system down below the thermostat level. (Refer to 7 - COOLING - STANDARD PROCEDURE)

(2) Remove radiator upper hose from coolant outlet connector (Fig. 9).

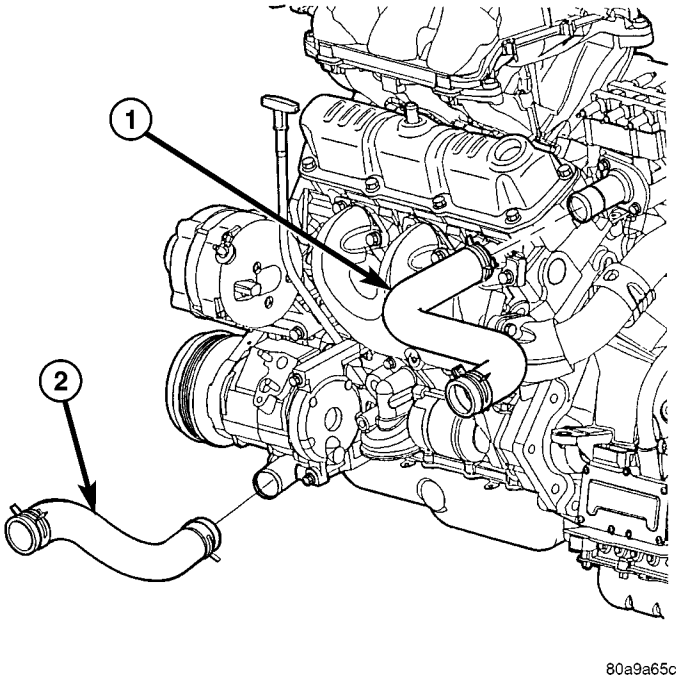

Fig. 9 RADIATOR HOSES TO ENGINE - 3.3/3.8L

1 - UPPER HOSE
2 - LOWER HOSE

(3) Remove coolant outlet connector bolts and connector (Fig. 10).

(4) Remove thermostat from outlet connector.

(5) Discard gasket and clean both gasket sealing surfaces.

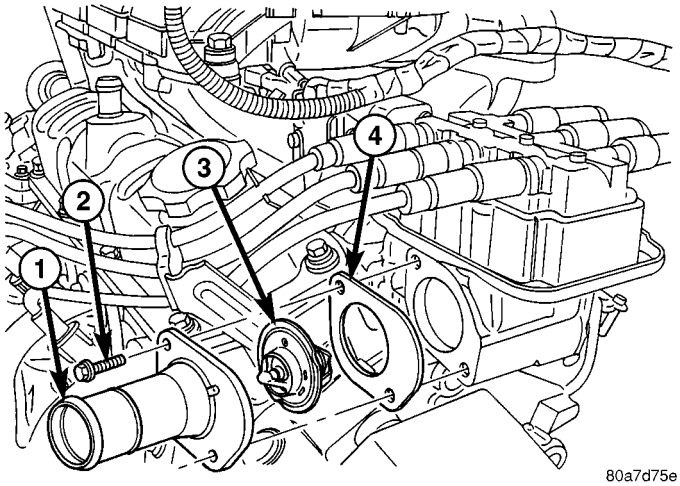

Fig. 10 THERMOSTAT - 3.3/3.8L ENGINE

1 - COOLANT OUTLET CONNECTOR
2 - BOLT
3 - THERMOSTAT
4 - GASKET

INSTALLATION

(1) To ensure proper seating of replacement thermostat, carefully remove the bulged metal from the wall of the outlet connector recess that was created during the staking procedure that held the OEM thermostat in place (Fig. 11). It is not necessary to restake the replacement thermostat into the connector.

(2) Position thermostat to coolant outlet connector. Align the two locating notches on thermostat to the connector (Fig. 12). This position will ensure proper location of the thermostat air bleed.

(3) Position a new gasket over the thermostat and connector making sure thermostat is in proper position and in the recess provided.

(4) Install thermostat and connector assembly to the intake manifold (Fig. 10). Tighten bolts to 28 N·m (250 in. lbs.).

(5) Install the radiator upper hose to coolant outlet connector (Fig. 9).

(6) Refill the cooling system to the proper level. (Refer to 7 - COOLING - STANDARD PROCEDURE)

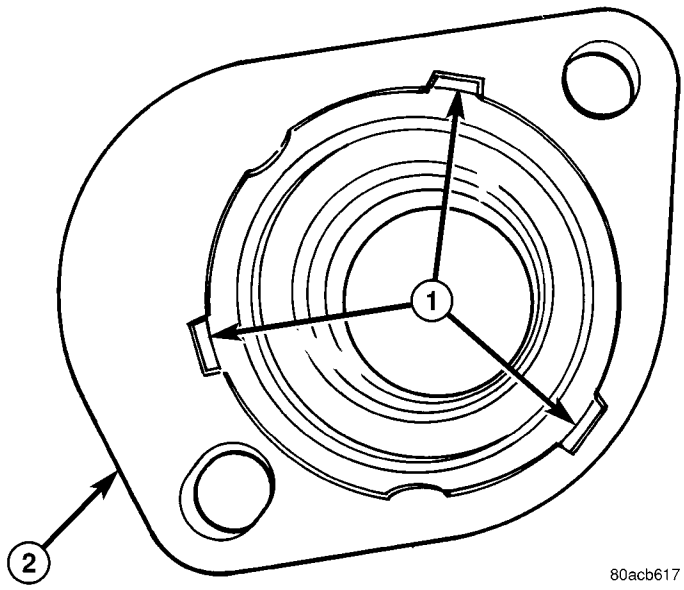

Fig. 11 Connector Staking Material Removal

1 - STAKE
2 - OUTLET CONNECTOR

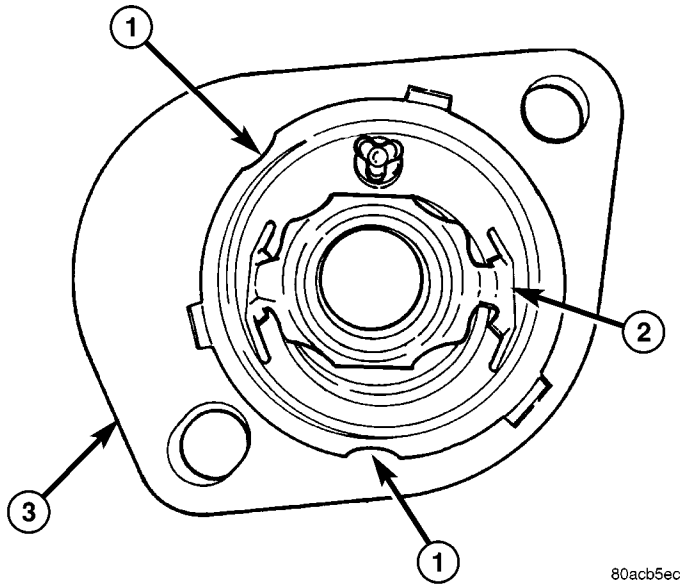

Fig. 12 Thermostat Position In Outlet Connector

1 - LOCATING NOTCH
2 - THERMOSTAT
3 - COOLANT OUTLET CONNECTOR

RADIATOR

REMOVAL

(1) Disconnect negative cable from battery.
(2) Remove radiator upper crossmember support. (Refer to 23 - BODY/EXTERIOR/GRILLE OPENING REINFORCEMENT - REMOVAL)

WARNING: DO NOT REMOVE THE CYLINDER BLOCK PLUG OR THE RADIATOR DRAINCOCK WITH THE SYSTEM HOT AND UNDER PRESSURE BECAUSE SERIOUS BURNS FROM COOLANT CAN OCCUR.

(3) Drain the cooling system. (Refer to 7 - COOLING - STANDARD PROCEDURE)
(4) Remove the radiator fans. (Refer to 7 - COOLING/ENGINE/RADIATOR FAN - REMOVAL)
(5) Disconnect coolant reserve/recovery hose.
(6) Remove vapor purge solenoid from mounting bracket.
(7) Disconnect upper and lower hoses from the radiator (Fig. 13) or (Fig. 14).

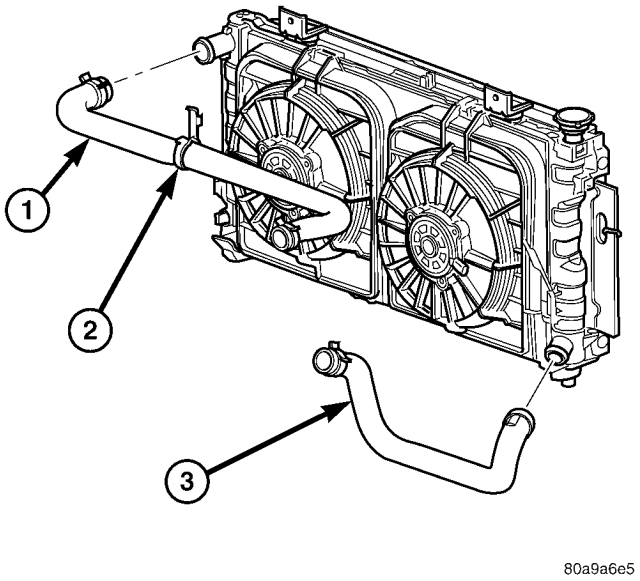

Fig. 13 Radiator Hoses to Radiator - 2.4L

1 - UPPER HOSE
2 - LOWER HOSE
3 - HOSE SUPPORT CLIP

(8) Lift the A/C condenser straight up to disengage the lower A/C condenser mounting brackets from the radiator. (Fig. 15). Separate the condenser from the radiator by lifting upward to disengage from lower mounts (Fig. 15). Allow the condenser to rest in front of radiator.

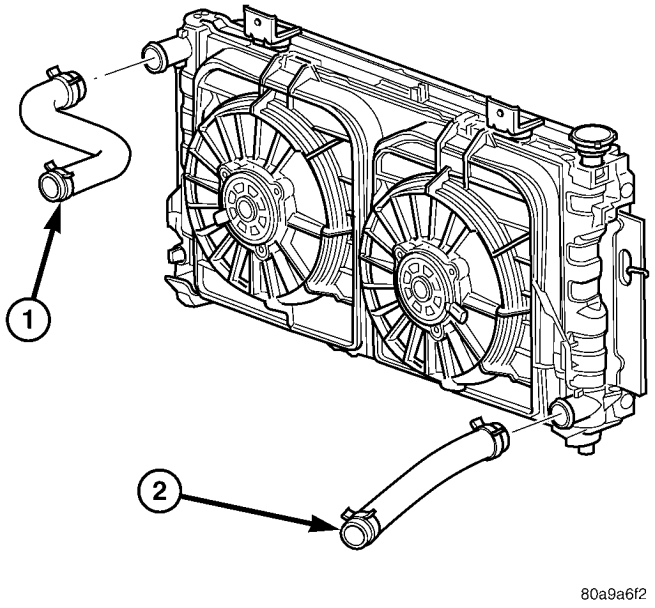

Fig. 14 Radiator Hoses to Radiator - 3.3/3.8L

1 - UPPER HOSE
2 - LOWER HOSE

(9) Radiator can now be lifted free from engine compartment. **Care should be taken not to damage radiator cooling fins or water tubes during removal.**

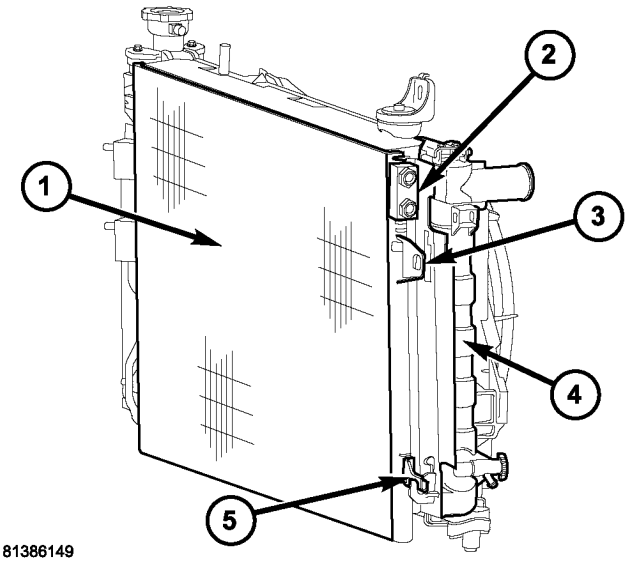

Fig. 15 A/C Condenser – 2.4L/3.3L/3.8L Engines

1 - A/C CONDENSER
2 - AUTO TRANS COOLER TAPPING BLOCK
3 - UPPER CONDENSER MOUNTING BRACKET (2)
4 - RADIATOR
5 - LOWER CONDENSER MOUNTING BRACKET (2)

RADIATOR (Continued)

INSTALLATION

(1) **Be sure the air seal is in position before radiator is installed.** Slide radiator down into position. Seat the radiator with the rubber isolators into the mounting holes provided, with a 10 lbs. force.

(2) Position air conditioning condenser onto the radiator lower mounts and ingage upper mounting tabs. (Fig. 15).

(3) Install the radiator upper and lower hoses (Fig. 13) or (Fig. 14).

(4) Connect the coolant reserve/recovery hose.

(5) Connect the vapor purge solenoid to the mounting bracket.

(6) Install the radiator fans. (Refer to 7 - COOLING/ENGINE/RADIATOR FAN - INSTALLATION)

(7) Install the radiator upper crossmember support. (Refer to 23 - BODY/EXTERIOR/GRILLE OPENING REINFORCEMENT - INSTALLATION)

(8) Fill the cooling system. (Refer to 7 - COOLING - STANDARD PROCEDURE)

(9) Connect negative cable to battery.

RADIATOR DRAINCOCK

REMOVAL

NOTE: It is not necessary to remove draincock during a routine coolant drain.

(1) Drain the cooling system. (Refer to 7 - COOLING - STANDARD PROCEDURE)

(2) Using a screwdriver, open the draincock by turning it counterclockwise until it stops.

(3) Pull the draincock from the radiator tank.

INSTALLATION

(1) Align draincock stem to radiator tank opening.

(2) Push draincock into the radiator tank opening.

CAUTION: Do not overtighten. The head of the draincock may break off.

(3) Using a screwdriver, tighten the draincock by turning clockwise until it stops.

(4) Fill the cooling system. (Refer to 7 - COOLING - STANDARD PROCEDURE)

RADIATOR PRESSURE CAP

DESCRIPTION

The cooling system pressure cap is located on the radiator. The cap construction includes; stainless steel swivel top, rubber seals, and retainer, main spring, and a spring loaded valve (Fig. 16).

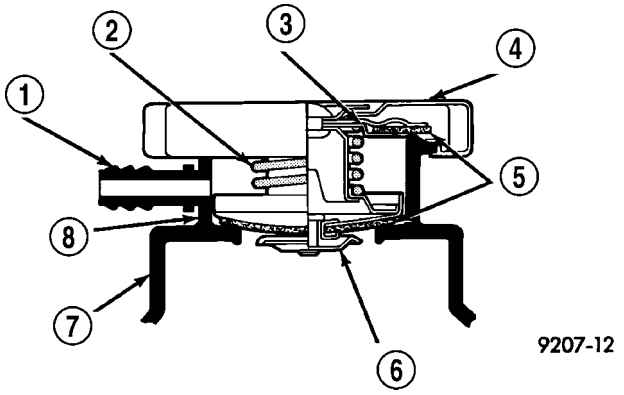

Fig. 16 Cooling System Pressure Cap Filler Neck

1 - OVERFLOW NIPPLE
2 - MAIN SPRING
3 - GASKET RETAINER
4 - STAINLESS-STEEL SWIVEL TOP
5 - RUBBER SEALS
6 - VENT VALVE
7 - RADIATOR
8 - FILLER NECK

OPERATION

The cooling system is equipped with a pressure cap that releases excessive pressure; maintaining a range of 97-124 kPa (14-18 psi).

The cooling system will operate at higher than atmospheric pressure. The higher pressure raises the coolant boiling point thus, allowing increased radiator cooling capacity.

There is also a vent valve in the center of the cap. This valve also opens when coolant is cooling and contracting, allowing the coolant to return to cooling system from coolant reserve system tank by vacuum through a connecting hose. **If valve is stuck shut, or the coolant recovery hose is pinched, the radiator hoses will be collapsed on cool down. Clean the vent valve (Fig. 16) and inspect coolant recovery hose routing, to ensure proper sealing when boiling point is reached.**

The gasket in the cap seals the filler neck, so that vacuum can be maintained, allowing coolant to be drawn back into the radiator from the reserve tank. **If the gasket is dirty or damaged, a vacuum may not be achieved, resulting is loss of coolant and eventual overheating due to low coolant level in radiator and engine.**

RADIATOR PRESSURE CAP (Continued)

DIAGNOSIS AND TESTING

DIAGNOSIS AND TESTING - COOLING SYSTEM PRESSURE CAP TESTING

Dip the pressure cap in water. Clean any deposits off the vent valve or its seat and apply cap to end of the Pressure Cap Test Adaptor that is included with the Cooling System Tester 7700 (Fig. 17). Working the plunger, bring the pressure to 104 kPa (15 psi) on the gauge. If the pressure cap fails to hold pressure of at least 97 kPa (14 psi), replace the pressure cap.

CAUTION: The Cooling System Tester Tool is very sensitive to small air leaks that will not cause cooling system problems. A pressure cap that does not have a history of coolant loss should not be replaced just because it leaks slowly when tested with this tool. Add water to the tool. Turn tool upside down and recheck pressure cap to confirm that cap is bad.

If the pressure cap tests properly while positioned on Cooling System Tester (Fig. 17), but will not hold pressure or vacuum when positioned on the filler neck. Inspect the filler neck and cap top gasket for irregularities that may prevent the cap from sealing properly.

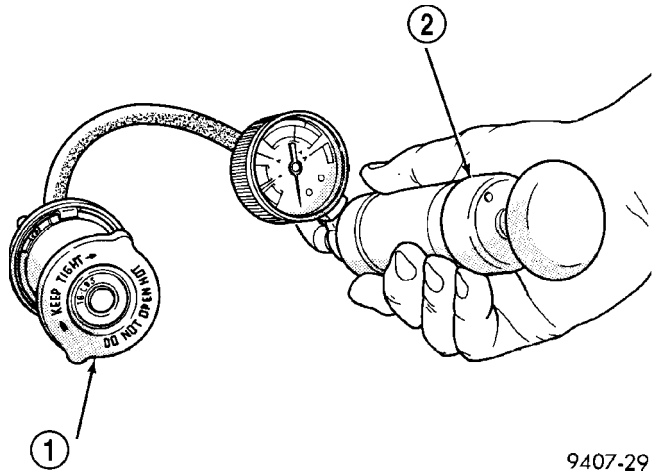

Fig. 17 Testing Cooling System Pressure Cap

1 - PRESSURE CAP
2 - PRESSURE TESTER

DIAGNOSIS AND TESTING - RADIATOR CAP TO FILLER NECK SEAL

The pressure cap upper gasket (seal) pressure relief can be checked by removing the overflow hose at the radiator filler neck nipple (Fig. 18). Attach the Radiator Pressure Tool to the filler neck nipple and pump air into the radiator. Pressure cap upper gasket should relieve at 69-124 kPa (10-18 psi) and hold pressure at 55 kPa (8 psi) minimum.

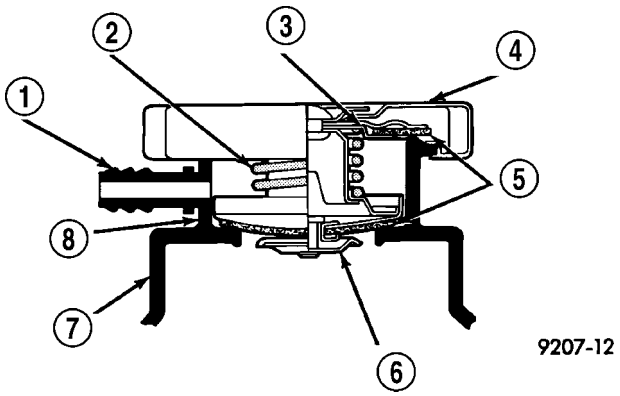

Fig. 18 Radiator Pressure Cap Filler Neck

1 - OVERFLOW NIPPLE
2 - MAIN SPRING
3 - GASKET RETAINER
4 - STAINLESS-STEEL SWIVEL TOP
5 - RUBBER SEALS
6 - VENT VALVE
7 - RADIATOR
8 - FILLER NECK

WARNING: THE WARNING WORDS "DO NOT OPEN HOT" ON THE RADIATOR PRESSURE CAP IS A SAFETY PRECAUTION. WHEN HOT, PRESSURE BUILDS UP IN COOLING SYSTEM. TO PREVENT SCALDING OR INJURY, THE RADIATOR CAP SHOULD NOT BE REMOVED WHILE THE SYSTEM IS HOT OR UNDER PRESSURE.

There is no need to remove the radiator cap at any time **except** for the following purposes:

(1) Check and adjust coolant freeze point.
(2) Refill system with new coolant.
(3) Conducting service procedures.
(4) Checking for vacuum leaks.

WARNING: IF VEHICLE HAS BEEN RUN RECENTLY, WAIT 15 MINUTES BEFORE REMOVING CAP. THEN PLACE A SHOP TOWEL OVER THE CAP AND WITHOUT PUSHING DOWN ROTATE COUNTERCLOCKWISE TO THE FIRST STOP. ALLOW FLUIDS TO ESCAPE THROUGH THE OVERFLOW TUBE AND WHEN THE SYSTEM STOPS PUSHING COOLANT AND STEAM INTO THE CRS TANK AND PRESSURE DROPS PUSH DOWN AND REMOVE THE CAP COMPLETELY. SQUEEZING THE RADIATOR INLET HOSE WITH A SHOP TOWEL (TO CHECK PRESSURE) BEFORE AND AFTER TURNING TO THE FIRST STOP IS RECOMMENDED.

CLEANING

Use only a mild soap to clean the pressure cap.

RADIATOR PRESSURE CAP (Continued)

INSPECTION

Hold the cap in your hand, **top side up** (Fig. 19). The vent valve at the bottom of the cap should open. If the rubber gasket has swollen, preventing the valve from opening, replace the cap.

Hold the cleaned cap in your hand, **upside down.** If any light can be seen between vent valve and the rubber gasket, replace the cap. **Do not use a replacement cap that has a spring to hold the vent shut.**

A replacement cap must be of the type designed for coolant reserve systems. This design ensures coolant return to the radiator.

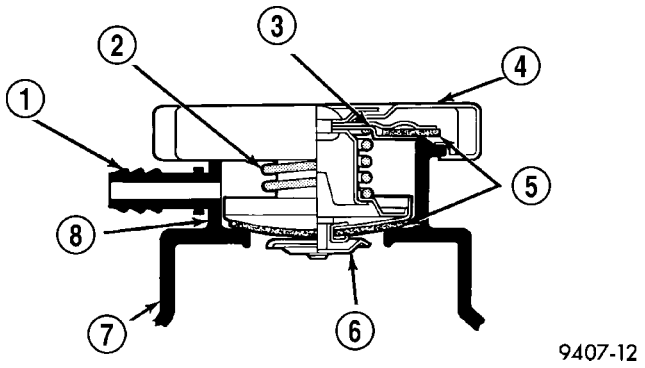

Fig. 19 Cooling System Pressure Cap

1 - OVERFLOW NIPPLE
2 - MAIN SPRING
3 - GASKET RETAINER
4 - STAINLESS-STEEL SWIVEL TOP
5 - RUBBER SEALS
6 - VENT VALVE
7 - RADIATOR
8 - FILLER NECK

RADIATOR FAN

DESCRIPTION

The dual radiator fans are mounted to the back side of the radiator (Fig. 20). The radiator fan consist of the fan blade, electric motor and a support shroud which are all serviced as an assembly.

OPERATION

RADIATOR FAN OPERATION CHART

COOLANT TEMPERATURE			A/C PRESSURE		TRANSAXLE OIL TEMPERATURE	
Fan Operation Speeds:	Initial	Max	Initial	Max	Initial	Max
Fan On:	104°C (220°F)	110°C (230°F) Fan Speed Duty-Cycles (Ramps-up) from 30% to 99%	1,724 Kpa (250 psi)	2,068 Kpa (300 psi) Fan Speed Duty-Cycles (Ramps-up) from 30% to 99%	96°C (204°F)	111°C (232°F) Fan Speed Duty Cycles (Ramps-up) from 30% to 99%
Fan Off:	101°C (214°F)	Fan Speed Duty-Cycles (Ramps-down) from 99% to 30%	1,710 Kpa (248 psi)	Fan Speed Duty-Cycles (Ramps-down) from 99% to 30%	89°C (192°F)	Fan Speed Duty Cycles (Ramps-down) from 99% to 30%

RADIATOR FAN (Continued)

DIAGNOSIS AND TESTING - RADIATOR FAN MOTOR

RADIATOR FAN DIAGNOSIS CHART

CONDITION	POSSIBLE CAUSES	CORRECTION
NOISY RADIATOR FAN	1. Fan blade loose.	1. Replace fan assembly. (Refer to 7 - COOLING/ENGINE/RADIATOR FAN - REMOVAL)
	2. Fan blade striking a surrounding object.	2. Locate point of fan blade contact and repair as necessary.
	3. Air obstructions at radiator or A/C condenser.	3. Remove obstructions and/or clean debris.
	4. Electric fan motor defective.	4. Replace fan assembly. (Refer to 7 - COOLING/ENGINE/RADIATOR FAN - REMOVAL)
ELECTRIC FAN MOTOR DOES NOT OPERATE	1. Fan relay, powertrain control module (PCM), coolant temperature sensor, or wiring defective.	1. (Refer to Appropriate Diagnostic Information) Repair as necessary.
	2. Defective A/C pressure transducer.	2. (Refer to Appropriate Diagnostic Information) Repair as necessary.
ELECTRIC RADIATOR FAN OPERATES ALL THE TIME	1. Fan relay, powertrain control module (PCM), coolant temperature sensor or wiring defective.	1. (Refer to Appropriate Diagnostic Information) Repair as necessary.
	2. Check for low coolant level.	2. Add coolant as necessary.
	3. Defective A/C pressure transducer.	3. (Refer to Appropriate Diagnostic Information) Repair as necessary.

REMOVAL

There are no repairs to be made to the fan or shroud assembly. If the fan is warped, cracked, or otherwise damaged, it must be replaced as an assembly (Fig. 20).

(1) Remove the radiator upper crossmember. (Refer to 23 - BODY/EXTERIOR/GRILLE OPENING REINFORCEMENT - REMOVAL)

(2) Disconnect the radiator fan electrical connectors.

(3) Remove radiator fan(s) retaining screw (Fig. 20).

(4) Remove the radiator fan(s) by lifting upward to release from mounts.

INSTALLATION

(1) Install the radiator fan(s) into mounts and attaching clips on the radiator.

(2) Install radiator fan(s) attaching screws (Fig. 20). Tighten to 5 N·m (45 in. lbs.).

(3) Connect the radiator fan(s) electrical connectors.

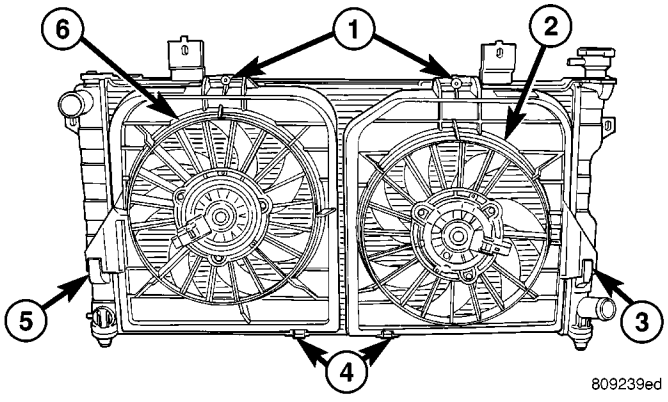

Fig. 20 Radiator Fans

1 - SCREWS - RADIATOR FAN ATTACHING
2 - RADIATOR FAN - RIGHT
3 - MOUNT - RIGHT RADIATOR FAN
4 - CLIPS - RADIATOR FAN LOWER
5 - MOUNT - LEFT RADIATOR FAN
6 - RADIATOR FAN - LEFT

(4) Install the radiator upper support crossmember. (Refer to 23 - BODY/EXTERIOR/GRILLE OPENING REINFORCEMENT - INSTALLATION)

(5) Install the upper radiator mounts to the crossmember bolts, if removed. Tighten to 8 N·m (70 in. lbs.).

(6) Install the radiator upper hose to the support clip (2.4L engine).

RADIATOR FAN RELAY

DESCRIPTION

The radiator fan relay is a solid state type and is located on the front bumper reinforcment (Fig. 21). Refer to WIRING DIAGRAMS for a circuit schematic.

OPERATION

The solid state radiator fan relay is controlled by the Powertrain Control Module (PCM) by way of a Pulse Width Modulated (PWM) signal. The relay control circuit supplies a 12 volt signal to the PCM. The PCM then pulses the ground circuit to achieve fan on time. The relay provides a voltage to the fan motors which is proportional to the pulse width it receives from the PCM. The duty cycle ranges from 30% for low speed operation, then ramps-up to 100% for high speed operation. This fan control system provides infinitely variable fan speeds, allowing for improved fan noise, A/C performance, better engine cooling, and additional vehicle power.

To control operation of the relay, the PCM looks at inputs from:

- Engine coolant temperature
- A/C pressure transducer
- Ambient temperature from the body controller
- Vehicle speed
- Transmission oil temperature

The PCM uses these inputs to determine when the fan should operate and at what speed. For further information on fan operation, (Refer to 7 - COOLING/ENGINE/RADIATOR FAN - OPERATION).

REMOVAL

(1) Open hood.

(2) Disconnect and isolate the battery negative cable.

(3) Remove the radiator crossmember to front fascia closure panel.

(4) Disconnect the relay electrical connector (Fig. 21).

(5) Remove the rivet attaching the relay to the front bumper beam (Fig. 21).

(6) Remove the relay.

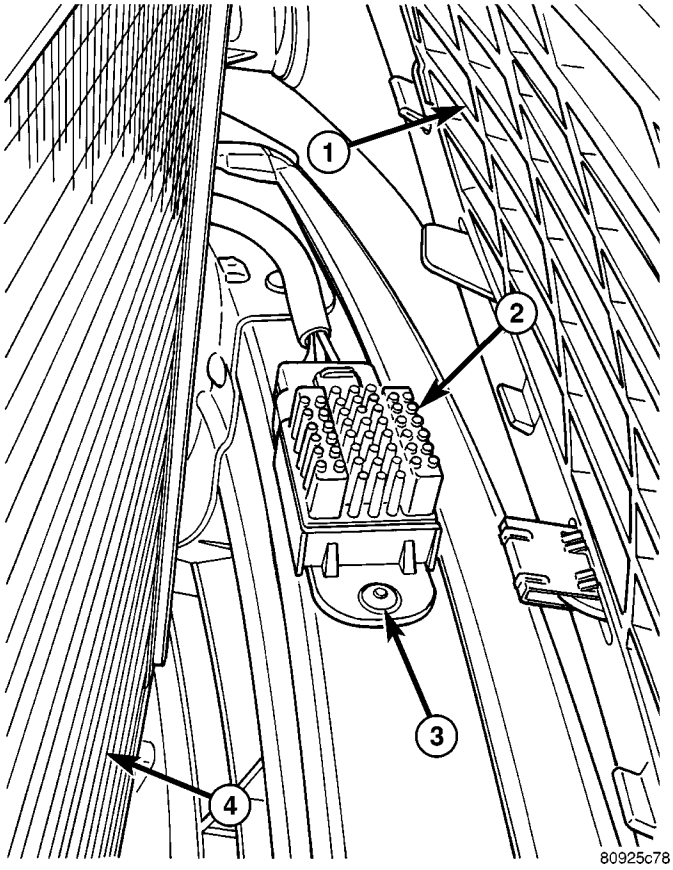

Fig. 21 Radiator Fan Relay

1 - FRONT FASCIA
2 - FAN RELAY
3 - RIVET
4 - A/C CONDENSER (FRONT SIDE)

INSTALLATION

CAUTION: The relay mounting location is designed to dissipate heat. Ensure the relay is securely attached to prevent relay “thermal” shutdown and relay damage, resulting in possible engine overheating.

(1) Position relay and install a new rivet (Fig. 21).

(2) Connect electrical connector to relay.

(3) Install closure panel and attaching screws.

(4) Connect negative cable to battery.

WATER PUMP - 2.4L

DESCRIPTION

The water pump has a cast aluminum body and housing with a stamped steel impeller. The water pump bolts directly to the block (Fig. 22). The cylinder block to water pump seal is provided by a rubber O-ring. The water pump is driven by the engine timing belt.

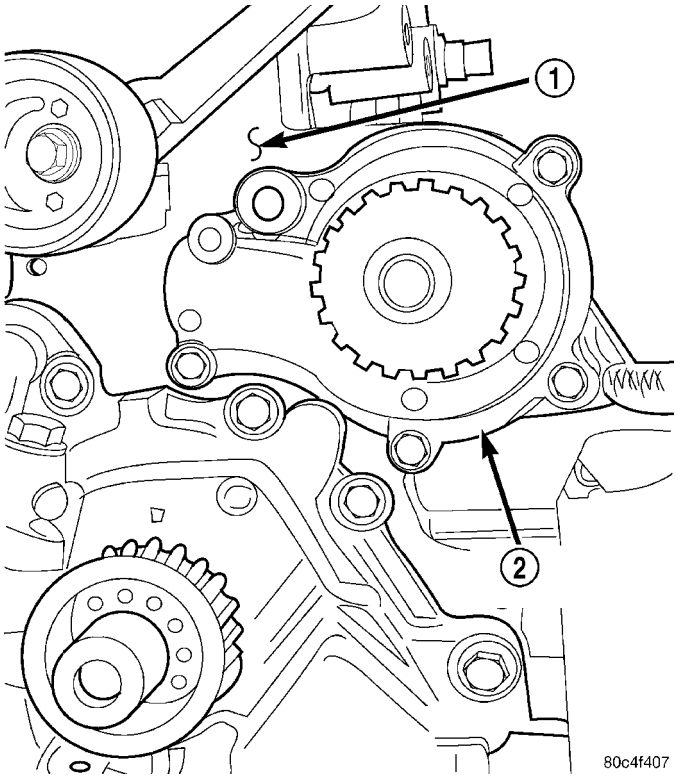

Fig. 22 Water Pump

1 - CYLINDER BLOCK
2 - WATER PUMP

REMOVAL

(1) Disconnect negative cable from battery.
(2) Raise vehicle on a hoist.
(3) Remove the right inner splash shield.
(4) Remove the accessory drive belts (Refer to 7 - COOLING/ACCESSORY DRIVE/DRIVE BELTS - REMOVAL).
(5) Drain the cooling system (Refer to 7 - COOLING - STANDARD PROCEDURE).
(6) Support engine from the bottom and remove right engine mount. (Refer to 9 - ENGINE/ENGINE MOUNTING/RIGHT MOUNT - REMOVAL).
(7) Remove right engine mount bracket (Fig. 23).
(8) Remove the timing belt (Refer to 9 - ENGINE/VALVE TIMING/TIMING BELT AND SPROCKET(S) - REMOVAL).
(9) Remove timing belt idler pulley.
(10) Hold camshaft sprocket with Special tool C-4687 and adaptor C-4687-1 while removing bolt. Remove both cam sprockets.
(11) Remove the timing belt rear cover (Refer to 9 - ENGINE/VALVE TIMING/TIMING BELT COVER(S) - REMOVAL).
(12) Remove the generator and bracket (Fig. 23).
(13) Remove water pump to engine attaching screws (Fig. 24).

CLEANING

Clean gasket mating surfaces as necessary.

INSPECTION

Replace water pump body assembly if it has any of these defects:
(1) Cracks or damage on the body.
(2) Coolant leaks from the shaft seal, evident by wet coolant traces on the pump body.
(3) Loose or rough turning bearing.
(4) Impeller rubs either the pump body or the engine block.
(5) Impeller loose or damaged.
(6) Sprocket or sprocket flange loose or damaged.

INSTALLATION

(1) Install new O-ring gasket in water pump body O-ring locating groove (Fig. 25).

CAUTION: Make sure O-ring is properly seated in water pump groove before tightening screws. An improperly located O-ring may be damaged and cause a coolant leak.

(2) Assemble pump body to block and tighten screws to 12 N·m (105 in. lbs.) (Fig. 24). Pressurize cooling system to 103.4 Kpa (15 psi) with pressure tester and check water pump shaft seal and O-ring for leaks.
(3) Rotate pump by hand to check for freedom of movement.
(4) Install the timing belt rear cover (Refer to 9 - ENGINE/VALVE TIMING/TIMING BELT COVER(S) - INSTALLATION).
(5) Install camshaft sprockets and torque bolts to 101 N·m (75 ft. lbs.) while holding camshaft sprocket with Special tool C-4687 and adaptor C-4687-1.

WATER PUMP - 2.4L (Continued)

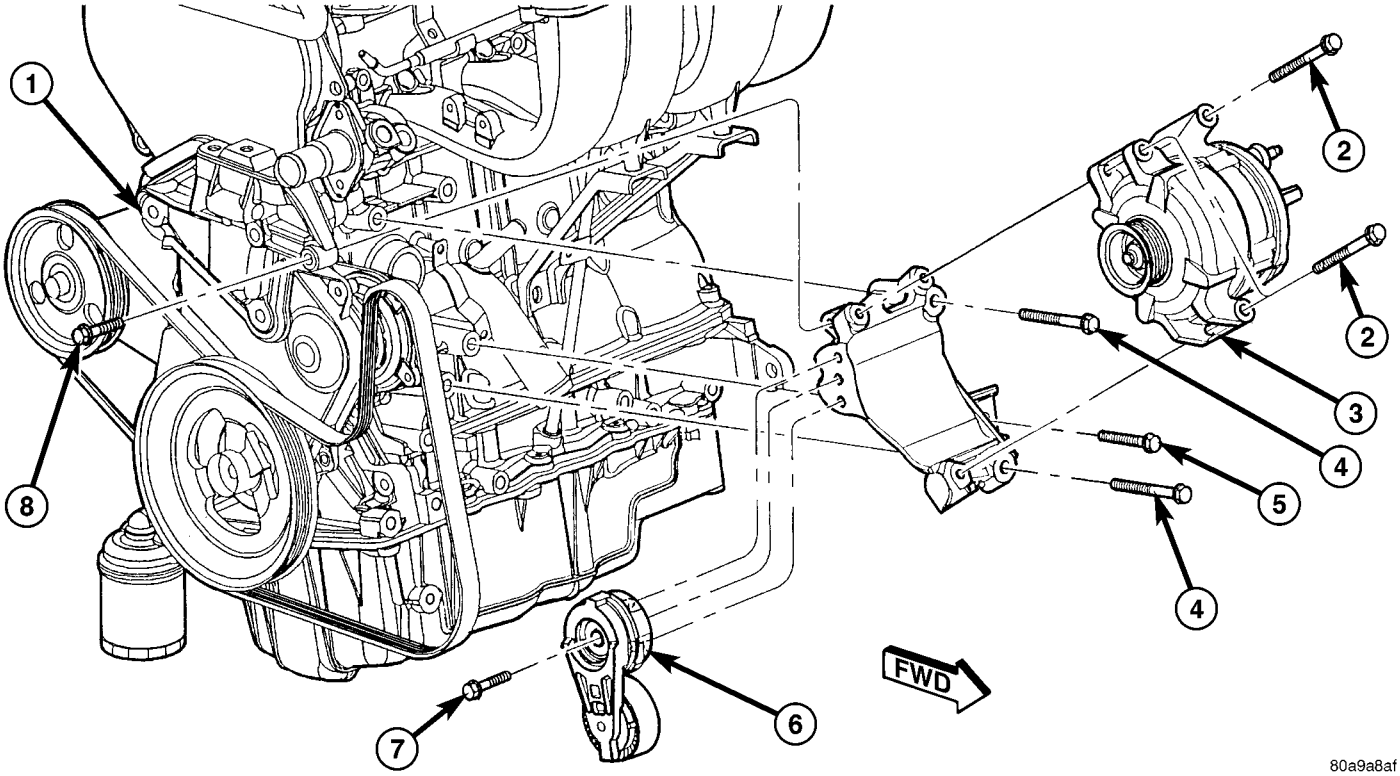

Fig. 23 Generator Bracket

1 - BRACKET - ENGINE MOUNT
2 - BOLT
3 - GENERATOR
4 - BOLT
5 - BOLT
6 - TENSIONER - DRIVE BELT
7 - BOLT
8 - BOLT

(6) Install timing belt idler pulley and torque mounting bolt to 61 N·m (45 ft. lbs.).

(7) Install the timing belt (Refer to 9 - ENGINE/ VALVE TIMING/TIMING BELT AND SPROCKET(S) - INSTALLATION).

(8) Install the generator mount bracket. (Fig. 23)

(9) Install the generator.

(10) Install right engine mount bracket and engine mount (Refer to 9 - ENGINE/ENGINE MOUNTING/ RIGHT MOUNT - INSTALLATION).

(11) Fill the cooling system (Refer to 7 - COOLING - STANDARD PROCEDURE).

(12) Install the accessory drive belts (Refer to 7 - COOLING/ACCESSORY DRIVE/DRIVE BELTS - INSTALLATION).

(13) Lower vehicle and connect battery cable.

WATER PUMP - 2.4L (Continued)

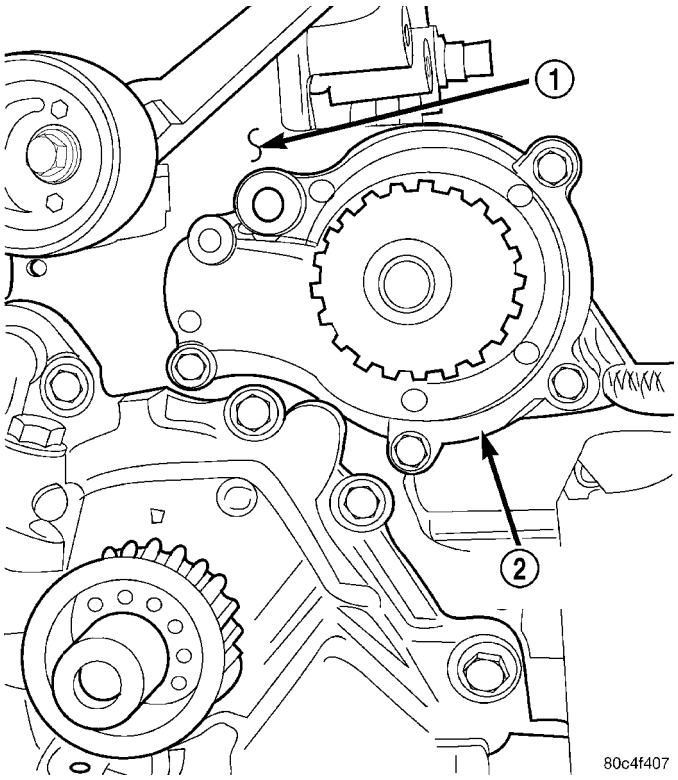

Fig. 24 Water Pump - 2.4L

1 - CYLINDER BLOCK
2 - WATER PUMP

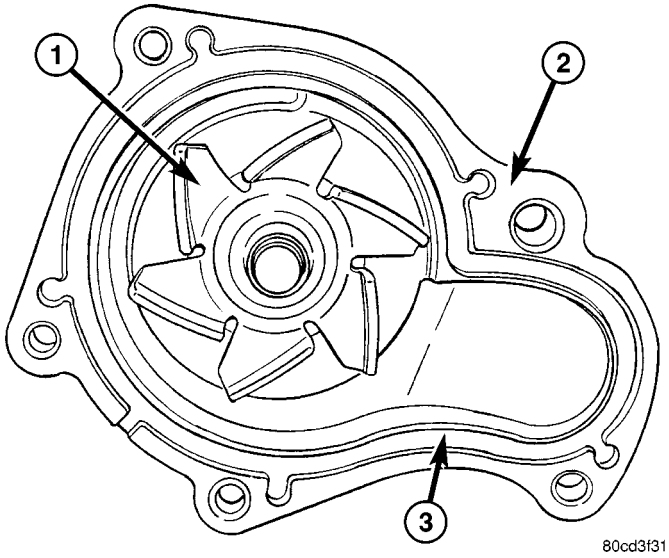

Fig. 25 Water Pump Body

1 - IMPELLER
2 - WATER PUMP BODY
3 - O-RING LOCATING GROOVE

WATER PUMP - 3.3/3.8L

DESCRIPTION

The water pump has a die-cast aluminum body and a plastic impeller. It bolts directly to the timing chain case cover, using a rubber seal for sealing (Fig. 26). It is driven by the accessory drive belt.

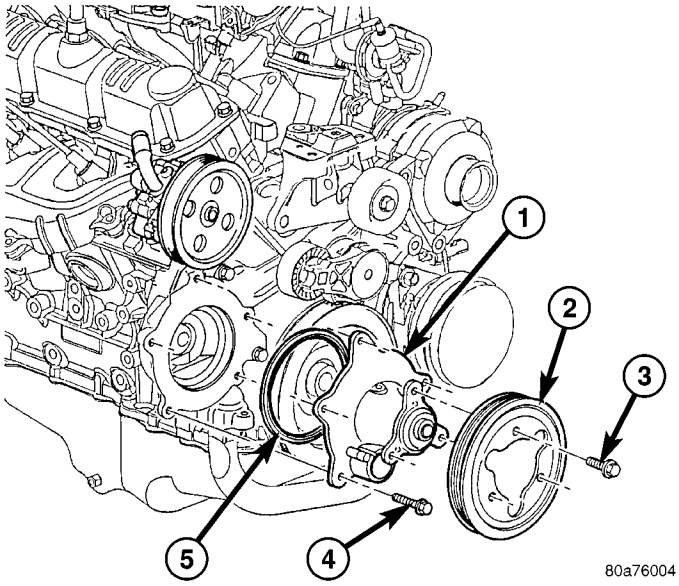

Fig. 26 Water Pump - 3.3/3.8L Engine

1 - WATER PUMP
2 - PULLEY - WATER PUMP
3 - BOLT - PULLEY
4 - BOLT - WATER PUMP
5 - SEAL - WATER PUMP

REMOVAL

(1) Drain the cooling system. (Refer to 7 - COOLING - STANDARD PROCEDURE)

(2) Remove the accessory drive belt shield.

(3) Remove the accessory drive belt. (Refer to 7 - COOLING/ACCESSORY DRIVE/DRIVE BELTS - REMOVAL)

(4) Remove water pump pulley bolts (Fig. 26).

NOTE: To remove the water pump pulley, it MUST first be positioned between water pump housing and drive hub. The pulley can then be removed with the water pump assembly.

(5) Rotate pulley until openings in pulley align with water pump drive hub spokes (Fig. 27). Move pulley inward between pump housing and hub (Fig. 27).

(6) Position pulley to allow access to water pump mounting bolts. Remove water pump mounting bolts (Fig. 28).

(7) Remove water pump with the pulley loosely positioned between hub and the pump body.

WATER PUMP - 3.3/3.8L (Continued)

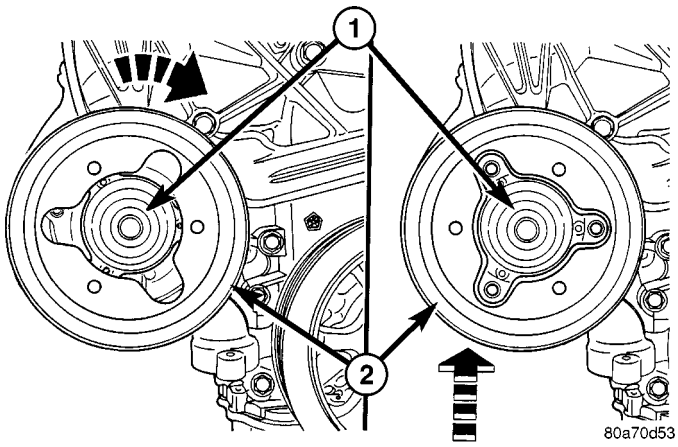

Fig. 27 Water Pump Pulley Positioning

1 - HUB - WATER PUMP
2 - PULLEY - WATER PUMP

(8) Remove and discard the seal.

(9) Clean seal groove and sealing surfaces on pump and timing chain case cover. Take care not to scratch or gouge sealing surfaces.

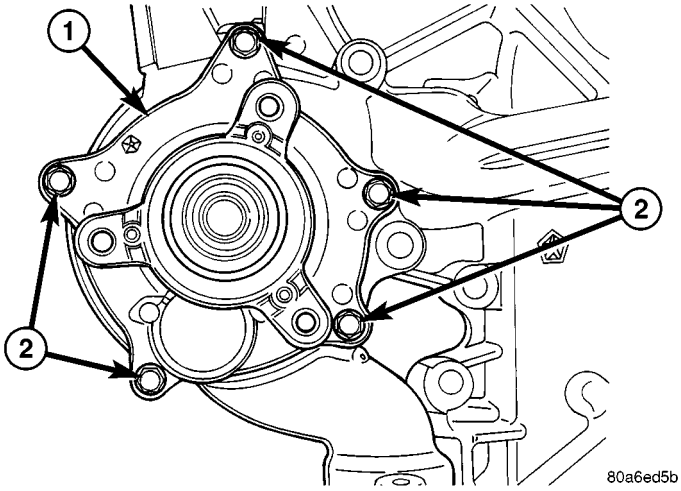

Fig. 28 Water Pump Bolts - 3.3/3.8L Engine (Shown Without Pulley)

1 - WATER PUMP
2 - BOLTS

CLEANING

Clean gasket mating surfaces as necessary.

INSPECTION

Replace the water pump if it has any of the following defects.

(1) Damage or cracks on the pump body.

(2) Coolant leaks; this will be evident by a wet stream of coolant running down the pump body and components below. A thin stain below the weep hole reservoir slot (Fig. 29) is considered normal operation.

(3) Impeller rubs inside of chain case cover.

(4) Excessively loose or rough turning bearing.

NOTE: A weepage stain that is black, brown, or grey is considered normal, if it is dry. If the weep appears wet; pressure test the cooling system at 15–18 psi and observe the weep area. If weep area remains unchanged, do not replace the water pump for this condition. Replace the water pump, if a steady flow of engine coolant is evident from the weep hole/reservoir slot (Fig. 29) (shaft seal failure). Be sure to perform a thorough analysis before replacing water pump.

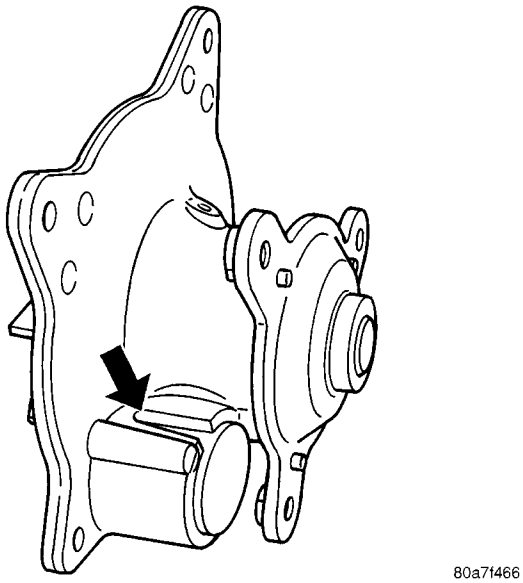

Fig. 29 Water Pump Inspection - 3.3/3.8L Engine

INSTALLATION

(1) Install new seal into water pump housing groove (Fig. 30).

NOTE: The water pump pulley MUST be positioned loosely between the pump housing and drive hub BEFORE water pump installation.

(2) Position the water pump pulley loosely between pump housing and drive hub (Fig. 27).

(3) Install water pump and pulley to the timing chain case cover (Fig. 26). Tighten water pump bolts to 12 N·m (105 in. lbs.).

(4) Position pulley on water pump hub. Install bolts and tighten to 28 N·m (250 in. lbs.) (Fig. 26).

(5) Rotate pump by hand to check for freedom of movement.

(6) Install the accessory drive belt. (Refer to 7 - COOLING/ACCESSORY DRIVE/DRIVE BELTS - INSTALLATION)

WATER PUMP - 3.3/3.8L (Continued)

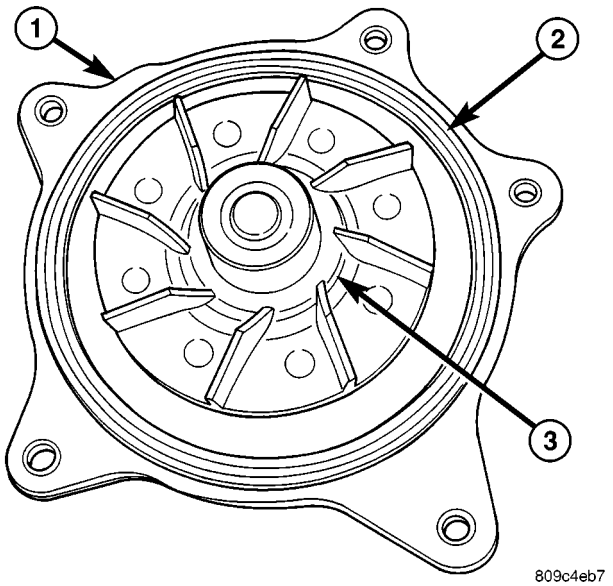

Fig. 30 Water Pump Seal

1 - WATER PUMP HOUSING
2 - SEAL
3 - IMPELLER

(7) Install drive belt shield.

(8) Fill the cooling system. (Refer to 7 - COOLING - STANDARD PROCEDURE)

WATER PUMP INLET TUBE - 2.4L

DESCRIPTION

The 2.4L engine uses a metal tube to connect the engine block to the lower radiator hose and heater return (Fig. 31). The tube has an O-ring for block to tube sealing and bolts attach the tube to the engine block.

REMOVAL

(1) Drain the cooling system. (Refer to 7 - COOLING - STANDARD PROCEDURE)

(2) Remove radiator upper hose to access the hose connections at the inlet tube.

(3) Remove radiator lower (Fig. 7) and heater hoses from the inlet tube (Fig. 32).

(4) Remove the two fasteners that hold the inlet tube to the block.

(5) Rotate tube while removing the tube from the engine block.

INSTALLATION

(1) Inspect the O-ring for damage before installing the tube into the cylinder block (Fig. 31).

(2) Lube O-ring with coolant and install inlet tube into the cylinder block opening (Fig. 31).

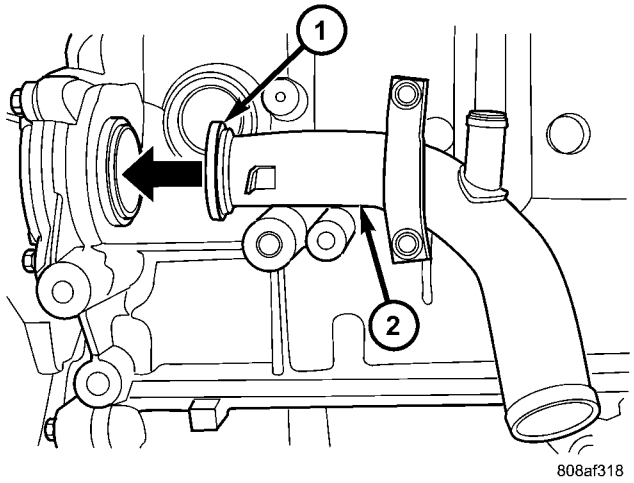

Fig. 31 Water Pump Inlet Tube - 2.4L Engine

1 - O-RING
2 - WATER PUMP INLET TUBE

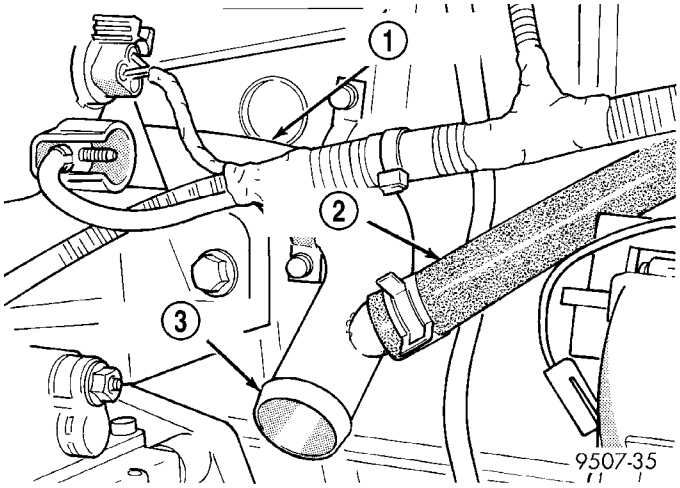

Fig. 32 Water Pump Inlet Tube Hose Connections

1 - WATER PUMP INLET TUBE
2 - HOSE - HEATER RETURN
3 - COOLANT INLET

(3) Install the two inlet tube fasteners and tighten to 12 N·m (105 in. lbs.).

(4) Connect the radiator lower hose (Fig. 7) and heater hose to inlet tube (Fig. 32).

(5) Install the radiator upper hose.

(6) Fill the cooling system. (Refer to 7 - COOLING - STANDARD PROCEDURE)

WATER PUMP INLET TUBE - 3.3/3.8L

REMOVAL

(1) Drain the cooling system. (Refer to 7 - COOLING - STANDARD PROCEDURE)

(2) Raise vehicle on hoist and remove the belt splash shield.

(3) Remove the radiator lower hose from inlet tube (Fig. 33).

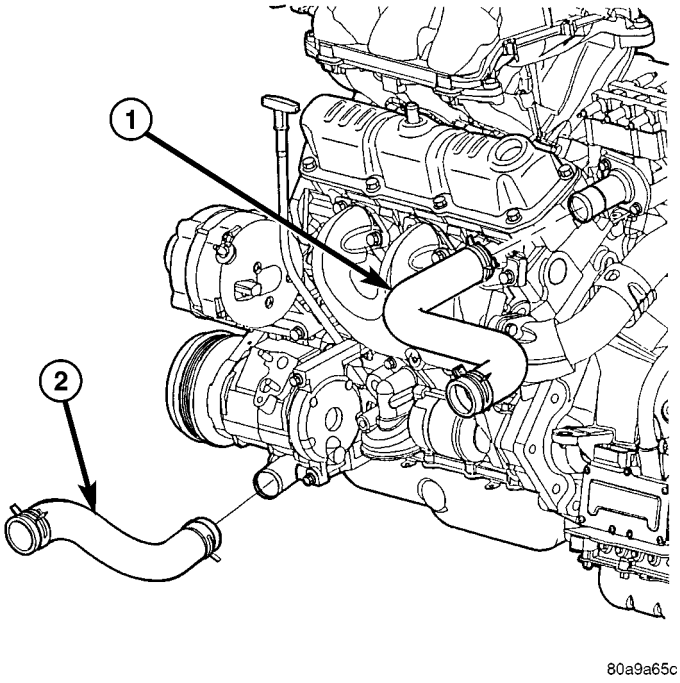

Fig. 33 RAD HOSES TO ENGINE - 3.3/3.8L

1 - UPPER HOSE
2 - LOWER HOSE

(4) Remove the oil cooler outlet/heater return hose from inlet tube (only if equipped with engine oil cooler) (Fig. 34).

(5) Remove the inlet tube bolts (Fig. 35).

(6) Remove the inlet tube (Fig. 35). Discard the O-ring seal.

INSTALLATION

(1) Clean the inlet tube O-ring sealing surfaces on the timing cover housing and tube.

(2) Apply Mopar® Dielectric Grease or equivalent to the O-ring before installation.

(3) Position new O-ring seal on inlet tube (Fig. 35).

(4) Install the inlet tube (Fig. 35). Tighten bolts to 28 N·m (250 in. lbs.).

(5) Connect radiator lower hose (Fig. 33) and heater return hose (if equipped with engine oil cooler) (Fig. 34) to the inlet tube.

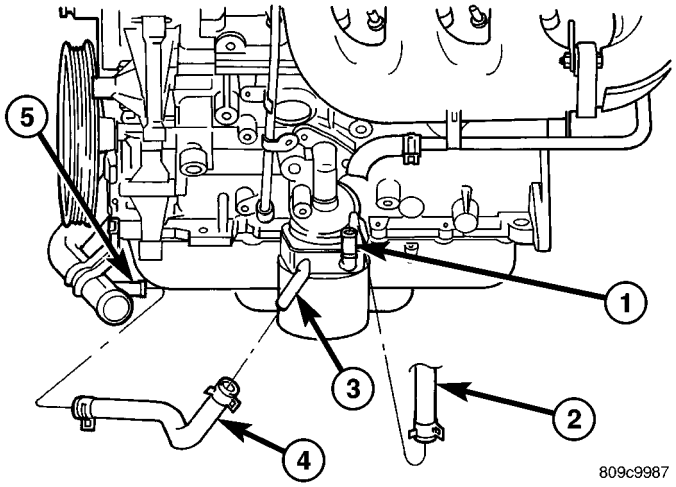

Fig. 34 Engine Oil Cooler Hoses (Engine Oil Cooler Equipped)

1 - OIL COOLER INLET TUBE
2 - INLET HOSE
3 - OIL COOLER OUTLET TUBE
4 - OUTLET HOSE
5 - WATER PUMP INLET TUBE

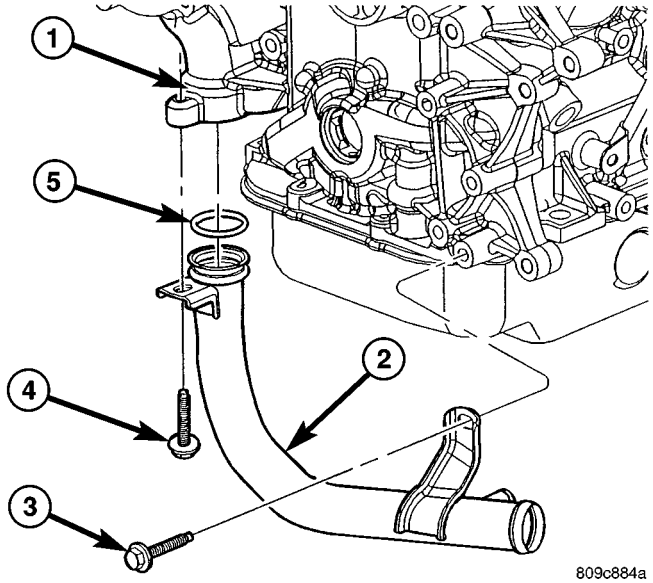

Fig. 35 WATER PUMP INLET TUBE

1 - TIMING CHAIN COVER
2 - INLET TUBE
3 - BOLT
4 - BOLT
5 - O-RING

(6) Install the drive belt splash shield and lower vehicle.

(7) Fill the cooling system. (Refer to 7 - COOLING - STANDARD PROCEDURE)

TRANSMISSION

TABLE OF CONTENTS

page

TRANSMISSION
STANDARD PROCEDURE - TRANSMISSION COOLER LINE QUICK CONNECT FITTING DISASSEMBLY/ASSEMBLY 38
TRANSMISSION OIL COOLER
DESCRIPTION 39
INSPECTION 39
TRANSMISSION OIL COOLER LINES
REMOVAL 39
INSTALLATION 40

TRANSMISSION

STANDARD PROCEDURE - TRANSMISSION COOLER LINE QUICK CONNECT FITTING DISASSEMBLY/ASSEMBLY

DISCONNECT

(1) Remove dust cap by pulling it straight back off of quick connect fitting. (Fig. 1)

(2) Place disconnect tool Special Tool 8875A onto transmission cooler line with the fingers of the tool facing the quick connect fitting.

(3) Slide disconnect tool down the transmission line and engage the fingers of the tool into the retaining clip. When properly engaged in the clip, the tool will fit flush against the quick connect fitting.

(4) Rotate the disconnect tool 60° to expand the retaining clip.

(5) While holding the disconnect tool against the quick connect fitting, pull back on the transmission cooler line to remove.

CONNECT

(1) Align transmission cooler line with quick connect fitting while pushing straight into the fitting.

(2) Push in on transmission cooler line until a “click” is heard or felt (Fig. 2).

(3) Slide dust cap down the transmission cooler line and snap it over the quick connect fitting until it is fully seated and rotates freely (Fig. 2). Dust cap will only snap over quick connect fitting when the transmission cooler line is properly installed.

NOTE: If dust cap will not snap into place, repeat assembly step #2.

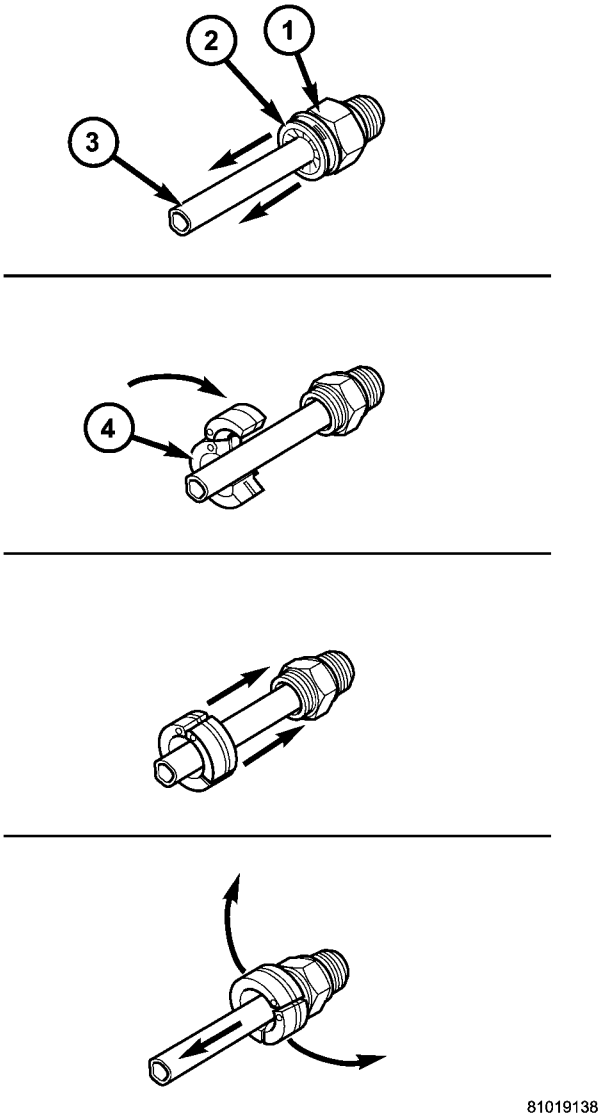

Fig. 1 Oil Cooler Line Quick Connect Fitting - Disassembly

1 - QUICK CONNECT FITTING
2 - DUST CAP
3 - OIL COOLER LINE
4 - SPECIAL TOOL 8875A

TRANSMISSION (Continued)

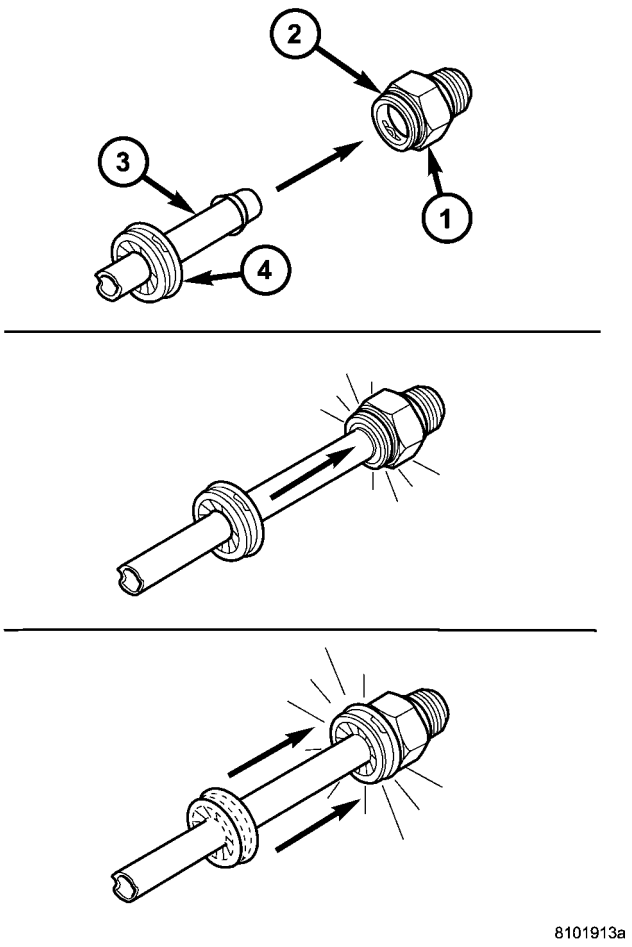

Fig. 2 Oil Cooler Line Quick Connect Fitting - Assembly

1 - QUICK CONNECT FITTING
2 - CLIP
3 - OIL COOLER LINE
4 - DUST CAP

TRANSMISSION OIL COOLER

DESCRIPTION

The automatic transmission cooler is located in the front of the radiator and behind the front fascia and is conbined with the A/C condensor. The transmission cooler is a heat exchanger that allows heat in the transmission flud to be transferred to the air passing over the cooler fins.

The Transmission oil cooler/A/C condenser assembly is equipped with quick connect fitting for the transmission oil cooler lines, a tapping block, for the receiver/drier, and mounting provisions for the power steering cooler.

The transmission oil cooler/AC condenser is serviced as an assembly. For removal on vehicles equipped with 2.4L/3.3L/3.8L engines, (Refer to 24 - HEATING & AIR CONDITIONING/PLUMBING/A/C CONDENSER - REMOVAL), vehicles equipped with 2.5L/2.8L engines (Refer to 24 - HEATING & AIR CONDITIONING/PLUMBING/A/C CONDENSER - REMOVAL). For installation on vehicles equipped with 2.4L/3.3L/3.8L engines (Refer to 24 - HEATING & AIR CONDITIONING/PLUMBING/A/C CONDENSER - INSTALLATION), and vehicles equipped with 2.5L/2.8L engines (Refer to 24 - HEATING & AIR CONDITIONING/PLUMBING/A/C CONDENSER - INSTALLATION).

INSPECTION

Inspect all hoses, tubes, clamps and connections for leaks, cracks, or damage. Replace as necessary. Use only approved transmission oil cooler hoses that are molded to fit the space available.

Inspect external coolers for leaks, loose mounts, or damage. Replace as necessary.

TRANSMISSION OIL COOLER LINES

REMOVAL

(1) Remove the two large screws that secure the front fascia and the outboard ends of the radiator sight shield to the radiator closure panel crossmember (Fig. 3).

(2) Remove the five small screws that secure the front fascia grille inserts to the radiator sight shield.

(3) Remove the radiator sight shield from the radiator closure panel crossmember.

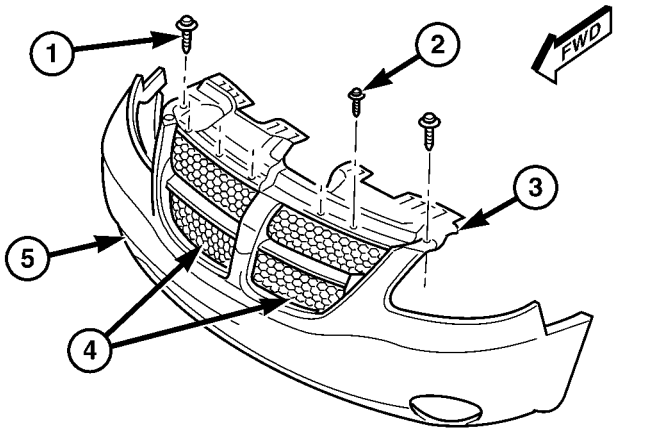

Fig. 3 Radiator Sight Shield - Typical

1 - LARGE SCREWS (2)
2 - SMALL SCREWS (5)
3 - RADIATOR SIGHT SHIELD
4 - GRILLE INSERTS
5 - FRONT FASCIA

TRANSMISSION OIL COOLER LINES (Continued)

(4) Remove the two bolts that secure the hood latch to the front of the radiator closure panel crossmember and move the latch out of the way over the top of the crossmember. Mark the location of latch for reinstallation.

(5) Using tool 8875A, disconnect the transmission oil cooler line quick-connect fittings located on the driver side of the A/C condenser from the transmission oil cooler (Refer to 7 - COOLING/TRANSMISSION - STANDARD PROCEDURE - TRANSMISSION COOLING).

(6) Using Tool 8875A, disconnect transmission oil cooler line quick-disconnect fittings at the transaxle (Refer to 7 - COOLING/TRANSMISSION - STANDARD PROCEDURE).

INSTALLATION

(1) Position transmission cooler lines in vehicle.

(2) Install transmission cooler line at transaxle fittings (Refer to 7 - COOLING/TRANSMISSION - STANDARD PROCEDURE).

(3) Install transmission cooler lines at transmission oil cooler/condensor (Refer to 7 - COOLING/TRANSMISSION - STANDARD PROCEDURE).

(4) Reposition the hood latch to the front of the radiator closure panel crossmember.

(5) Install the two screws that secure the hood latch to the front of the radiator closure panel crossmember. Check and adjust the hood latch as needed. Tighten the screws to 14 N·m (123 in. lbs.).

(6) Position the radiator sight shield onto the radiator closure panel crossmember.

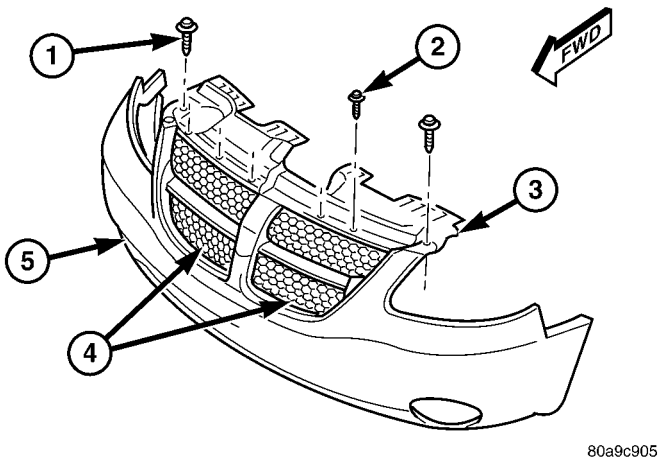

Fig. 4 Radiator Sight Shield – Typical

1 - LARGE SCREWS (2)
2 - SMALL SCREWS (5)
3 - RADIATOR SIGHT SHIELD
4 - GRILLE INSERTS
5 - FRONT FASCIA

(7) Install the five small screws that secure the front fascia grille inserts to the radiator sight shield. Tighten the screws to 2 N·m (17 in. lbs.).

(8) Install the two large screws that secure the front fascia and the outboard ends of the radiator sight shield to the radiator closure panel crossmember. Tighten the screws to 6 N·m (53 in. lbs.) (Fig. 4)

(9) Start engine and check transaxle fluid level. Adjust fluid level as necessary.

AUDIO/VIDEO

TABLE OF CONTENTS

page

AUDIO/VIDEO
DESCRIPTION 1
DIAGNOSIS AND TESTING
AUDIO/VIDEO 2
AMPLIFIER
REMOVAL 7
INSTALLATION 7
ANTENNA BODY AND CABLE
DESCRIPTION 7
OPERATION 7
DIAGNOSIS AND TESTING
ANTENNA BODY AND CABLE 8
REMOVAL 8
INSTALLATION 8
ANTENNA MODULE - EXPORT
DESCRIPTION 10
OPERATION 10
DIAGNOSIS AND TESTING
ANTENNA MODULE - EXPORT 10
REMOVAL 10
INSTALLATION 10
ANTENNA - NAVIGATION RADIO
REMOVAL 11
INSTALLATION 11
CD CHANGER
DESCRIPTION 11
OPERATION 11
REMOVAL 11
INSTALLATION 11
DVD PLAYER
DESCRIPTION 12
REMOVAL 12
INSTALLATION 12
INSTRUMENT PANEL ANTENNA CABLE
REMOVAL 12

page

INSTALLATION 12
QUARTER GLASS INTEGRAL ANTENNA - EXPORT
DESCRIPTION 13
OPERATION 13
DIAGNOSIS AND TESTING
QUARTER GLASS INTEGRAL ANTENNA - EXPORT 13
RADIO
DESCRIPTION 13
OPERATION 14
DIAGNOSIS AND TESTING
RADIO 14
REMOVAL 14
INSTALLATION 15
RADIO NOISE SUPPRESSION COMPONENTS
DESCRIPTION 15
OPERATION 15
REMOTE SWITCHES
DESCRIPTION 16
OPERATION 16
DIAGNOSIS AND TESTING
REMOTE SWITCHES 16
REMOVAL 17
INSTALLATION 17
SPEAKER
DIAGNOSIS AND TESTING
SPEAKER 18
REMOVAL 18
INSTALLATION 19
VIDEO SCREEN
DESCRIPTION 20
OPERATION 20
REMOVAL 20
INSTALLATION 20

AUDIO/VIDEO

DESCRIPTION

An audio system is standard on this model. A rear seat video system is an available option. Several combinations of radio receivers are offered on this model. The audio/video system uses an ignition switched source of battery current so that the system will only operate when the ignition switch is in the RUN or ACCESSORY/ACCESSORY DELAY positions.

The audio system includes the following components:

- Amplifier
- Antenna
- CD changer (if equipped)
- DVD player (if equipped)
- Radio noise suppression components
- Radio receiver
- Speakers
- Video screen (if equipped)

Certain functions and features of the audio/video system rely upon resources shared with other electronic modules in the vehicle over the Programmable Communication Interface (PCI) bus network. The data bus network allows the sharing of sensor infor-

mation. For diagnosis of these electronic modules or of the data bus network, the use of a DRB III® scan tool and the proper Diagnostic Procedures information is recommended.

DIAGNOSIS AND TESTING

AUDIO/VIDEO

Any diagnosis of the Audio system should begin with the use of the DRB III® diagnostic tool. For information on the use of the DRB III®, refer to the appropriate Diagnostic Service information.

Refer to the appropriate wiring information.

WARNING: ON VEHICLES EQUIPPED WITH AIRBAGS, REFER TO ELECTRICAL, RESTRAINTS BEFORE ATTEMPTING ANY STEERING WHEEL, STEERING COLUMN, OR INSTRUMENT PANEL COMPONENT DIAGNOSIS OR SERVICE. FAILURE TO TAKE THE PROPER PRECAUTIONS COULD RESULT IN ACCIDENTAL AIRBAG DEPLOYMENT AND POSSIBLE PERSONAL INJURY.

AUDIO SYSTEM DIAGNOSIS

CONDITION	POSSIBLE CAUSE	CORRECTION
NO AUDIO.	1. FUSE INOPERATIVE.	1. CHECK RADIO FUSES IN FUSE BLOCK MODULE. REPLACE FUSES, IF REQUIRED.
	2. RADIO CONNECTOR DAMAGED.	2. CHECK FOR LOOSE OR CORRODED RADIO CONNECTOR. REPAIR, IF REQUIRED.
	3. WIRING DAMAGED.	3. CHECK FOR BATTERY VOLTAGE AT RADIO CONNECTOR. REPAIR WIRING, IF REQUIRED.
	4. GROUND DAMAGED.	4. CHECK FOR CONTINUITY BETWEEN RADIO CHASSIS AND A KNOWN GOOD GROUND. THERE SHOULD BE CONTINUITY. REPAIR GROUND, IF REQUIRED.
	5. RADIO INOPERATIVE.	5. USING A SCAN TOOL, CHECK FOR TROUBLE CODES IN THE AUDIO SYSTEM.
	6. SPEAKERS INOPERATIVE	6. REFER TO SPEAKER DIAGNOSIS.
NO DISPLAY.	1. FUSE INOPERATIVE.	1. CHECK RADIO FUSES IN FUSE BLOCK MODULE. REPLACE FUSES, IF REQUIRED.
	2. RADIO CONNECTOR DAMAGED.	2. CHECK FOR LOOSE OR CORRODED RADIO CONNECTOR. REPAIR, IF REQUIRED.
	3. WIRING DAMAGED.	3. CHECK FOR BATTERY VOLTAGE AT RADIO CONNECTOR. REPAIR WIRING, IF REQUIRED.
	4. GROUND DAMAGED.	4. CHECK FOR CONTINUITY BETWEEN RADIO CHASSIS AND A KNOWN GOOD GROUND. THERE SHOULD BE CONTINUITY. REPAIR GROUND, IF REQUIRED.
	5. RADIO INOPERATIVE.	5. USING A SCAN TOOL, CHECK FOR TROUBLE CODES IN THE AUDIO SYSTEM.
NO MEMORY.	1. FUSE INOPERATIVE.	1. CHECK IGNITION-OFF DRAW FUSE. REPLACE FUSE, IF REQUIRED.
	2. RADIO CONNECTOR DAMAGED.	2. CHECK FOR LOOSE OR CORRODED RADIO CONNECTOR. REPAIR, IF REQUIRED.
	3. WIRING DAMAGED.	3. CHECK FOR BATTERY VOLTAGE AT RADIO CONNECTOR. REPAIR WIRING, IF REQUIRED.

AUDIO/VIDEO (Continued)

CONDITION	POSSIBLE CAUSE	CORRECTION
	4. GROUND DAMAGED.	4. CHECK FOR CONTINUITY BETWEEN RADIO CHASSIS AND A KNOWN GOOD GROUND. THERE SHOULD BE CONTINUITY. REPAIR GROUND, IF REQUIRED.
	5. RADIO INOPERATIVE.	5. USING A SCAN TOOL, CHECK FOR TROUBLE CODES IN THE AUDIO SYSTEM.
POOR RADIO RECEPTION.	1. ANTENNA OR CABLE DAMAGED.	1. REFER TO ANTENNA DIAGNOSIS.
	2. GROUND DAMAGED.	2. CHECK FOR CONTINUITY BETWEEN RADIO CHASSIS AND A KNOWN GOOD GROUND. THERE SHOULD BE CONTINUITY. REPAIR GROUND, IF REQUIRED.
	3. RADIO INOPERATIVE.	3. USING A SCAN TOOL, CHECK FOR TROUBLE CODES IN THE AUDIO SYSTEM.
	4. POOR ANTENNA CONNECTION AT RADIO OR IN LINE.	4. CHECK ANTENNA CONNECTOR.
SOUND DISTORTION (VIBRATION FROM SPEAKER AREA, BUZZING - HUMMING)	1. DOOR TRIM PANEL LOOSE OR MISSING FASTENERS.	1. INSPECT DOOR TRIM PANEL AND CORRECT AS NECESSARY. REPLACE ANY MISSING FASTENERS.
	2. WATER SHIELD LOOSE OR MISALIGNED.	2. INSPECT WATER SHIELD AND ADJUST AS REQUIRED.
	3. ITEMS PLACED IN DOOR TRIM PANEL MAP POCKETS VIBRATING OR MOVING FROM SIDE TO SIDE.	3. REMOVE ITEMS FROM DOOR TRIM PANEL. ENSURE THAT VIBRATION IS NO LONGER PRESENT.
NO/POOR TAPE OPERATION.	1. TAPE DAMAGED.	1. INSERT KNOWN GOOD TAPE AND TEST OPERATION.
	2. FOREIGN OBJECTS BEHIND TAPE DOOR.	2. REMOVE FOREIGN OBJECTS AND TEST OPERATION.
	3. DIRTY CASSETTE TAPE HEAD.	3. CLEAN HEAD WITH MOPAR CASSETTE HEAD CLEANER.
	4. RADIO INOPERATIVE.	4. USING A SCAN TOOL, CHECK FOR TROUBLE CODES IN THE AUDIO SYSTEM.
NO COMPACT DISC OPERATION	1. CD DAMAGED.	1. INSERT KNOWN GOOD CD AND TEST OPERATION.
	2. FOREIGN MATERIAL ON CD.	2. CLEAN CD AND TEST OPERATION.
	3. CONDENSATION ON CD OR OPTICS.	3. ALLOW TEMPERATURE OF VEHICLE INTERIOR TO STABILIZE AND TEST OPERATION.

AUDIO/VIDEO (Continued)

CONDITION	POSSIBLE CAUSE	CORRECTION
	4. RADIO INOPERATIVE.	4. USING A SCAN TOOL, CHECK FOR TROUBLE CODES IN THE AUDIO SYSTEM.
HEADPHONES WILL NOT HOLD A CHANNEL OR HAVE STATIC	1. WEAK BATTERIES IN THE HEADPHONES.	1. REPLACE BATTERIES.
	2. CLOSENESS TO RADIO TRANSMITTER SUCH AS A RADIO TOWER, AIRPORT TRANSMITTER OR SOME MOBILE RADIOS.	2. MOVE TO AN AREA AWAY FROM THESE CONDITIONS.
REMOTE CONTROL INOPERATIVE	1. WEAK BATTERIES IN THE REMOTE CONTROL.	1. REPLACE BATTERIES.
	2. OPERATION CONSTRAINT OF SYSTEM	2. MAKE SURE THAT REAR AUDIO IS IN A DIFFERENT MODE THAN FRONT SPEAKERS. REMOTE CONTROL WILL NOT WORK WHEN BOTH ARE IN THE SAME MODE.

AUDIO/VIDEO (Continued)

VIDEO SYSTEM DIAGNOSIS

CONDITION	POSSIBLE CAUSES	CORRECTION
NO VIDEO (DVD PLAYER WILL NOT LOAD OR EJECT)	1. FUSE INOPERATIVE.	1. CHECK FUSES. REPLACE FUSES IF REQUIRED.
	2. LOOSE OR DAMAGED DVD PLAYER CONNECTOR	2. CHECK FOR LOOSE OR CORRODED DVD PLAYER CONNECTOR (16 PIN). REPAIR OR REPLACE AS REQUIRED.
	3. LOOSE OR DAMAGED WIRING/DVD PLAYER INOPERATIVE	3. CHECK PIN 1 (B+) AND PIN 9 (GROUND) OF THE 16 PIN CONNECTOR, THEN CHECK PIN 1 (B+) AND PIN 7 (GROUND) OF THE 12 PIN CONNECTOR. IF THE 16 PIN CONNECTOT DOES NOT SHOW VOLTAGE, THE 12 PIN CONNECTOR WILL NOT SHOW VOLTAGE (THE 12 PIN IS FED FROM THE 16 PIN). IF VOLTAGE IS OK ON THE 16 PIN, BUT NOT PRESENT ON THE 12 PIN, UNPLUG THE 12 PIN HARNESS FROM THE PLAYER AND CHECK THE CONNECTOR PINSON THE BACK OF THE PLAYER. IF VOLTAGE IS PRESENT ON THE 12 PIN CONNECTOR, THE SCREEN OR THE 12 PIN HARNESS SHOULD BE REPLACED. IF THERE IS STILL NO VOLTAGE ON THE 12 PIN CONNECTOR, THE DVD PLAYER SHOULD BE REPLACED.
	4. GROUND CONNECTION DAMAGED	4. CHECK FOR CONTINUITY BETWEEN DVD PLAYER AND A KNOWN GOOD GROUND. THERE SHOULD BE CONTINUITY. REPAIR GROUND IF REQUIRED.
	5. DVD PLAYER DAMAGED	5. EXCHANGE OR REPLACE DVD PLAYER IF REQUIRED.
	6. DVD DAMAGED. AVOID USING CD'S OR DVD'S THAT HAVE ADHESIVE TYPE LABELS, AS THEY MAY CAUSE THE DISC TO BECOME JAMMED.	6. INSERT KNOWN GOOD DVD AND TEST OPERATION.
NO DISPLAY. AUDIO HEARD THROUGH SPEAKERS	1. LOOSE OR DAMAGED CONNECTORS	1. CHECK FOR LOOSE OR CORRODED DVD PLAYER CONNECTOR (12 PIN). CHECK FOR LOOSE OR CORRODED VIDEO SCREEN CONNECTOR. REPAIR IF REQUIRED. CHECK FOR LOOSE OR DAMAGED IN-LINE CONNECTOR.

AUDIO/VIDEO (Continued)

CONDITION	POSSIBLE CAUSES	CORRECTION
	2. WIRING DAMAGED	2. WITH HARNESS CONNECTED, CHECK FOR VIDEO SIGNAL VOLTAGE AT DVD PLAYER AND AT VIDEO SCREEN HARNESS. PLACE KNOWN GOOD DVD INTO DVD PLAYER. PLACE POSITIVE LEAD OF VOLTMETER ON PIN 5 (VIDEO SIGNAL) OF THE 12 PIN CONNECTOR. PLACE NEGATIVE LEAD ON PIN 6 (VIDEO GROUND). READINGS SHOULD BE BETWEEN 0.1V TO 2V DC.
	3. VIDEO SCREEN DAMAGED	3. EXCHANGE OR REPLACE VIDEO SCREEN IF REQUIRED.
WHITE DISPLAY	1. LOW VOLTAGE	1. CHECK FOR BATTERY VOLTAGE (9V-16V) AT DVD PLAYER 12 PIN CONNECTOR (PIN 1-BATTERY, PIN 7-GROUND). DISPLAY WILL BE WHITE IF VOLTAGE DROPS BELOW 6V.
	2. VIDEO SCREEN DAMAGED	2. EXCHANGE OR REPLACE VIDEO SCREEN IF REQUIRED.
DARK OR BRIGHT SPOTS ON SCREEN	1. BRIGHTNESS SETTING REQUIRES ADJUSTMENT.	1. ADJUST BRIGHTNESS SETTING OF VIDEO SCREEN BY PRESSING BUTTONS ON SIDE OF VIDEO SCREEN UNTIL DESIRED LEVEL IS REACHED. START WITH A BLACK SCREEN, THEN PRESS BUTTON UP 16-20 TIMES. THERE ARE 64 TOTAL STEPS OF BRIGHTNESS.
BRIGHT OR DARK DISPLAY	1. VIDEO SCREEN DISPLAY PIXEL DEFECT.	1. THE ACCEPTABLE LEVEL OF DOTS ON THE SCREEN IS (GREEN-1, RED-2) OR A TOTAL (GREEN+RED+BLUE+WHITE+BLACK) = 8. REPLACE OR EXCHANGE VIDEO SCREEN IF NECESSARY.
VIDEO SELECTIONS DO NOT APPEAR FULL SCREEN WIDTH	1. ASPECT RATIO IS SET INCORRECTLY.	1. USING MODE BUTTON, ADJUST UNTIL VIDEO APPEARS CORRECTLY.
	2. SOME DVD'S ARE TWO SIDED. ONE SIDE IS WIDE SCREEN FORMAT AND THE OTHER IS FULL SCREEN OR THERE MAY BE A WIDE SCREEN OR STANDARD SCREEN FORMAT ON THE DISC.	2. ENSURE THAT DVD IS INSERTED CORRECTLY.

AUDIO/VIDEO (Continued)

CONDITION	POSSIBLE CAUSES	CORRECTION
BUTTONS ON VIDEO SCREEN INOPERATIVE	1. VIDEO SCREEN DAMAGED.	1. PLACE KNOWN GOOD DVD INTO DVD PLAYER. ONCE IMAGE APPEARS ON VIDEO SCREEN, PRESS TOP BUTTON ON SIDE OF VIDEO SCREEN TO ADJUST WIDTH OF DISPLAY. PRESS BOTTOM BUTTONS TO ADJUST BRIGHTNESS. ONCE DVD MENU APPEARS ON VIDEO SCREEN, PRESS MIDDLE BUTTON ON VIDEO SCREEN. HIGHLIGHTED SELECTION WILL BEGIN TO PLAY. IF ANY OF THE BUTTONS DO NOT FUNCTION, REPLACE OR EXCHANGE VIDEO SCREEN.

AMPLIFIER

REMOVAL

(1) Disconnect and isolate the battery negative cable.

(2) Remove the right quarter trim panel (Refer to 23 - BODY/INTERIOR/QUARTER TRIM PANEL - REMOVAL).

(3) Remove the right rear speaker.

(4) Disconnect the two electrical harness retainers near the amplifier.

(5) Remove the mounting fasteners (Fig. 1).

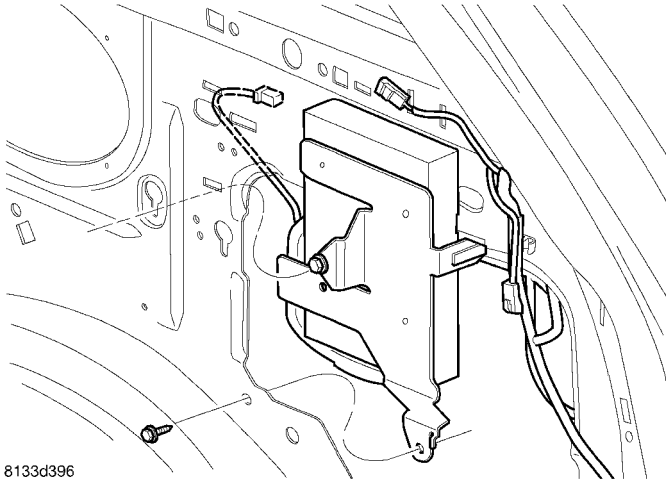

Fig. 1 AMPLIFIER

(6) Disconnect the electrical harness connectors and remove the amplifier through the right rear speaker opening.

(7) Remove the bracket from the amplifier.

INSTALLATION

(1) Install bracket to amplifier

(2) Connect the electrical harness connectors, and position amplifier.

(3) Install and tighten mounting fasteners.

(4) Install the two electrical harness retainers.

(5) Install the right rear speaker.

(6) Install right quarter trim panel (Refer to 23 - BODY/INTERIOR/QUARTER TRIM PANEL - INSTALLATION).

(7) Connect the battery negative cable.

ANTENNA BODY AND CABLE

DESCRIPTION

Domestic vehicles use a fixed-length stainless steel rod-type antenna mast, installed at the right front fender of the vehicle. The antenna mast is connected to the center wire of the coaxial antenna cable, and is not grounded to any part of the vehicle.

OPERATION

To minimize static, the antenna base must have a good ground. The coaxial antenna cable shield (the outer wire mesh of the cable) is grounded to the antenna base and the radio chassis.

The antenna coaxial cable has an additional disconnect, located near the right end of the instrument panel. This additional disconnect allows the instrument panel assembly to be removed and installed without removing the radio.

ANTENNA BODY AND CABLE (Continued)

DIAGNOSIS AND TESTING

ANTENNA BODY AND CABLE

WARNING: ON VEHICLES EQUIPPED WITH AIRBAGS, REFER TO ELECTRICAL, RESTRAINTS BEFORE ATTEMPTING ANY STEERING WHEEL, STEERING COLUMN, OR INSTRUMENT PANEL COMPONENT DIAGNOSIS OR SERVICE. FAILURE TO TAKE THE PROPER PRECAUTIONS COULD RESULT IN ACCIDENTAL AIRBAG DEPLOYMENT AND POSSIBLE PERSONAL INJURY.

The ohmmeter test lead connections for each test are shown in (Fig. 2).

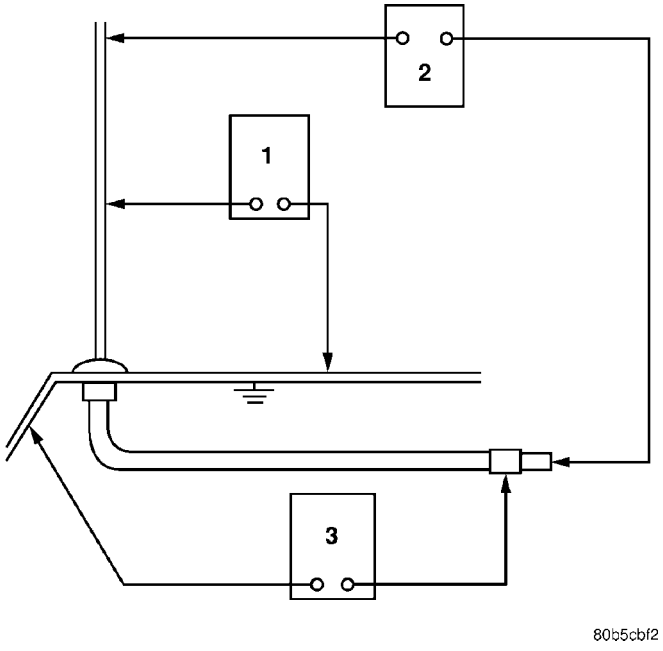

Fig. 2 Antenna Test Points

TEST 1

Test 1 determines of the antenna mast is insulated from the base. Proceed as follows:

(1) Unplug the antenna coaxial cable from the radio chassis and isolate. Remove the antenna mast.

(2) Connect an ohmmeter test lead to the inside center of the antenna base. Connect the other test lead to a metallic portion on the outside of the antenna base. Check for continuity.

(3) There should be no continuity. If continuity is found, replace the faulty or damaged antenna base and cable assembly.

TEST 2

Test 2 checks the antenna for an open circuit as follows:

(1) Unplug the antenna coaxial cable connector from the radio chassis. Remove the antenna mast.

(2) Connect an ohmmeter test lead to the inside center of the antenna base. Connect the other test lead to the center pin of the antenna coaxial cable connector.

(3) Continuity should exist (the ohmmeter should only register a fraction of an ohm). High or infinite resistance indicates damage to the base and cable assembly. Replace the faulty base and cable if required.

TEST 3

Test 3 checks the condition of the ground between the antenna base and the vehicle body as follows:

(1) Connect one ohmmeter test lead to the fender on an exposed metal area. Connect the other test lead to the outer crimp on the antenna coaxial cable connector.

(2) The resistance should be less than (1) ohm.

(3) If the resistance is more than (1) ohm, clean and/or tighten the antenna base to the fender mounting hardware.

REMOVAL

(1) Disconnect and isolate the battery negative cable.

(2) Remove glove box from instrument panel, (Refer to 23 - BODY/INSTRUMENT PANEL/GLOVE BOX - REMOVAL).

(3) Disconnect antenna cable connector from extension cable (Fig. 3).

(4) Remove right kick trim panel.

(5) Disengage rubber grommet insulator from door hinge pillar.

(6) Pull antenna cable through hinge pillar into opening between door hinges.

(7) Hoist and support vehicle on safety stands.

(8) Remove front wheel.

(9) Remove front wheelhouse splash shield. (Refer to 23 - BODY/EXTERIOR/LF WHEELHOUSE SPLASH SHIELD - REMOVAL).

(10) Remove antenna mast from antenna base (Fig. 4).

(11) Using cap nut tool, remove cap nut holding antenna base to front fender (Fig. 5).

(12) Remove antenna base from under front fender.

INSTALLATION

(1) Install antenna base to underside of front fender.

(2) Install cap nut holding antenna base to front fender.

(3) Install antenna mast to antenna base **Ensure that the antenna mast is fully seated on antenna base, and that there is no gap between the mast and base.**.

ANTENNA BODY AND CABLE (Continued)

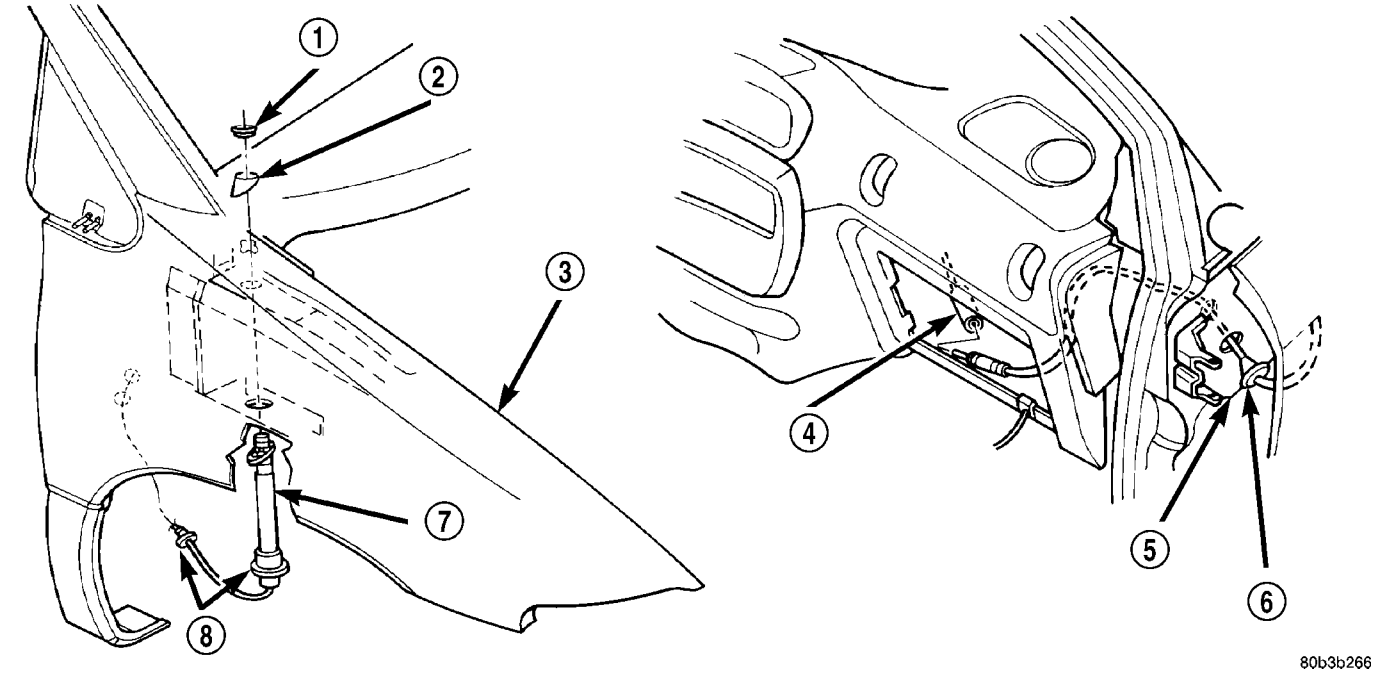

Fig. 3 Antenna Cable

1 - CAP NUT
2 - ADAPTER
3 - FENDER
4 - CABLE TO RADIO (EXTENSION CABLE)
5 - A-PILLAR
6 - RUBBER GROMMET
7 - ANTENNA CABLE AND BODY ASSEMBLY
8 - RUBBER GROMMET

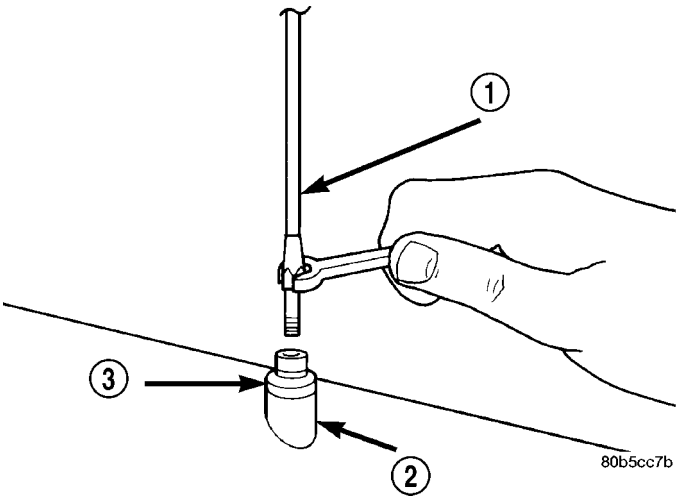

Fig. 4 Antenna Mast

1 - ANTENNA MAST
2 - ADAPTER
3 - CAP NUT

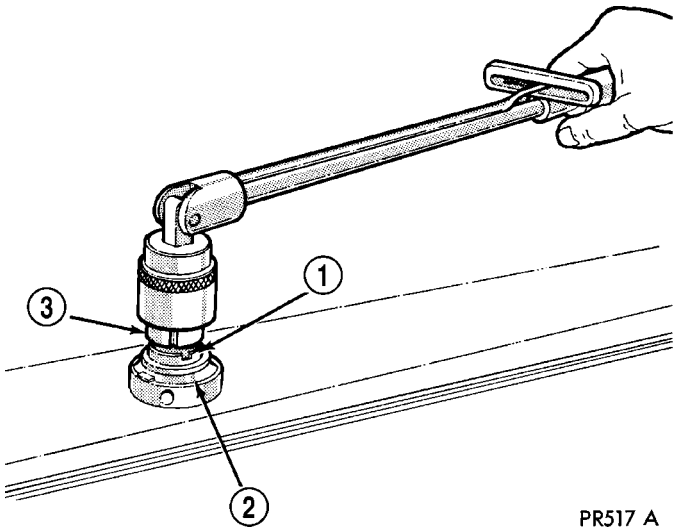

Fig. 5 Antenna Cap Nut

1 - CAP NUT
2 - ANTENNA ADAPTER
3 - TOOL

(4) Install front wheelhouse splash shield.
(5) Install front wheel.
(6) Lower vehicle.
(7) Push antenna cable through opening in hinge pillar.
(8) Insert rubber grommet into door hinge pillar.
(9) Install kick panel.
(10) Connect antenna cable connector to extension cable.
(11) Install glove box to instrument panel.
(12) Connect the battery negative cable.

ANTENNA MODULE - EXPORT

DESCRIPTION

The antenna module is an electromagnetic circuit component designed to capture and enhance RF (Radio Frequency) signals in both the AM and FM broadcast bands. The antenna module is mounted to the right rear roof rail under the headliner. The module is grounded through the mounting bracket and fastener. The module has a two wire electrical connector that connects to the integral radio antenna, located on the right rear quarter glass. There is also an electrical connector for battery voltage and a coax cable connector.

OPERATION

The antenna module receives both AM and FM radio signals supplied by the side window integral radio antenna system and selectively amplifies them. The amplified signal is then sent through the body length coax cable to the radio input.

DIAGNOSIS AND TESTING

ANTENNA MODULE - EXPORT

CONDITION	POSSIBLE CAUSES	CORRECTION
NO AM RECEPTION, WEAK FM RECEPTION	1. Antenna module to antenna connector open or disconnected.	1. Repair open, reconnect antenna module connector to glass mounted antenna.
	2. Coax open or disconnected.	2. Repair open, reconnect coax.
	3. No battery power at antenna module.	3. Check fuse. if okay, repair open in battery voltage circuit.
NO AM OR FM RECEPTION	1. Coax disconnected at radio.	1. Reconnect coax.
	2. Coax shorted to ground.	2. Repair or Replace coax
WEAK OR NO AM/FM RECEPTION	1. Antenna Module faulty.	1. Replace antenna module

REMOVAL

(1) Disconnect and isolate the battery negative cable.

(2) Lower headliner as necessary to access antenna module (Fig. 6).

(3) Disconnect antenna coax cable lead and electrical harness connector from antenna module.

(4) Disconnect the antenna module connector from the quarter glass.

(5) Remove the mounting screw and the antenna module.

INSTALLATION

(1) Install the antenna module and the mounting fastener.

(2) Connect the antenna connector to the quarter glass.

(3) Connect the antenna lead and electrical connector to the antenna module.

(4) Raise and install headliner.

(5) Connect the battery negative cable.

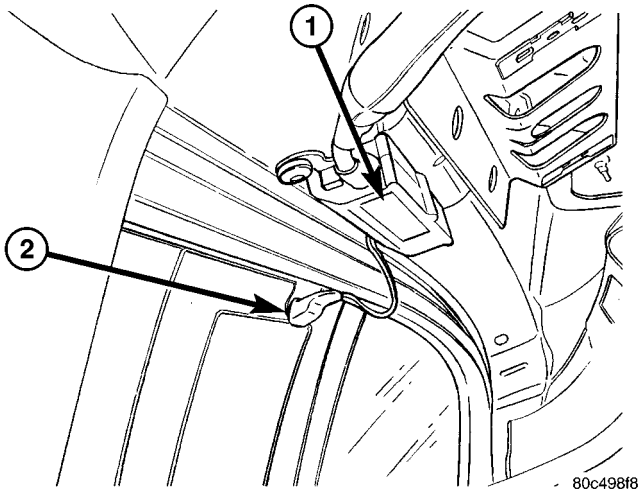

Fig. 6 ANTENNA MODULE

1 - ANTENNA MODULE
2 - ANTENNA MODULE CONNECTOR

ANTENNA - NAVIGATION RADIO

REMOVAL

(1) Disconnect and isolate the battery negative cable.

(2) Remove the radio (Refer to 8 - ELECTRICAL/ AUDIO/RADIO - REMOVAL).

(3) Disconnect antenna from radio (Fig. 7). Remove tape securing antenna to air duct, and remove antenna (Fig. 8).

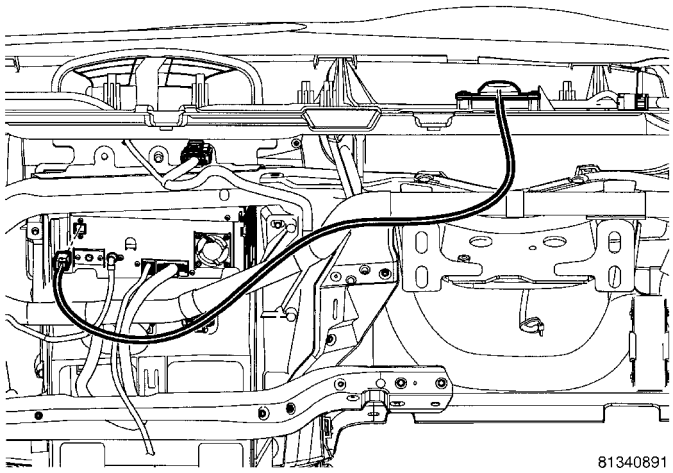

Fig. 7 NAVIGATION ANTENNA

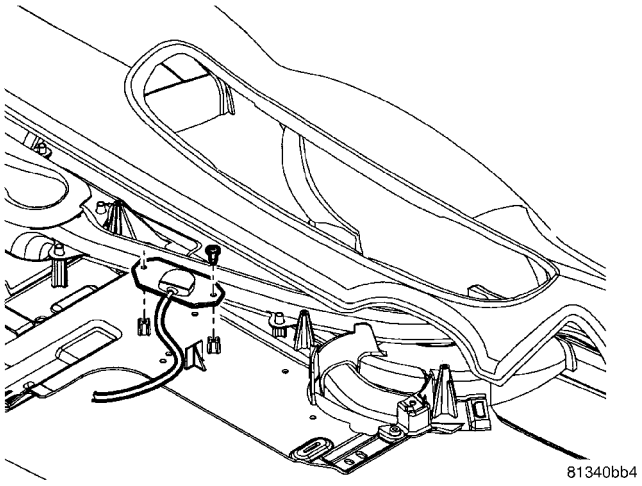

Fig. 8 NAVIGATION ANTENNA MOUNTING

INSTALLATION

(1) Secure antenna to air duct.

(2) Connect antenna to radio.

(3) Install radio (Refer to 8 - ELECTRICAL/AUDIO/RADIO - INSTALLATION).

(4) Connect battery negative cable.

CD CHANGER

DESCRIPTION

The 6 Disc In-Dash CD Changer (if equipped) is located in the instrument panel below the radio. The remote changer does not use a cartridge or magazine for the CD's. Up to 6 CD's can be directly loaded into this unit.

OPERATION

Due to its compact design, the CD changer can carry out only one operation at a time. For example, you can not load a new disc while playing another at the same time. Each operation happens sequentially.

The radio unit provides control over all features of the CD changer with the exception of the CD load and eject functions, which are controlled by buttons located on the front of the CD changer. All features you would expect, such as Disc Up/Down, Track Up/Down, Random and Scan are controlled by the radio, which also displays all relevant CD changer information on the radio display.

The CD changer contains a Eject button, six disc buttons, an indicator LED for each of the six disc positions as well as an illuminated disc opening. The individual LED indicates whether a CD is currently loaded in that particular chamber of the CD changer. Pressing the individual button for a particular chamber, then the Eject button will eject a disc currently present in that chamber. If the chamber is currently empty, actuating the individual button will position that chamber to receive and load a new disc in that chamber.

REMOVAL

(1) Disconnect and isolate the battery negative cable.

(2) Remove screws holding CD changer.

(3) Disconnect the wire connector from the back of the CD changer.

(4) Remove the CD changer from the vehicle (Fig. 9).

INSTALLATION

(1) Reconnect the wire connector to the CD changer.

(2) Insert the CD changer into the instrument panel.

NOTE: Use care when inserting CD changer so that cable is not pinched or trapped against instrument panel.

CD CHANGER (Continued)

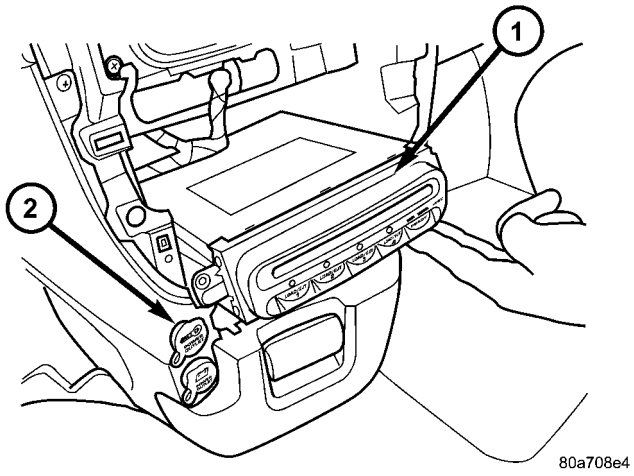

Fig. 9 CD - CHANGER

1 - CD-CHANGER
2 - POWER OUTLET

(3) Install screws holding CD changer.
(4) Reconnect the battery negative cable.

DVD PLAYER

DESCRIPTION

The DVD player (if equipped) is located in the instrument panel below the radio. The DVD player can hold one DVD at a time. Three RCA jacks on the front of the unit allow the use of MP3 players, video game systems or camcorders.

REMOVAL

(1) Disconnect and isolate the battery negative cable.
(2) Remove screws holding DVD player (Fig. 10).

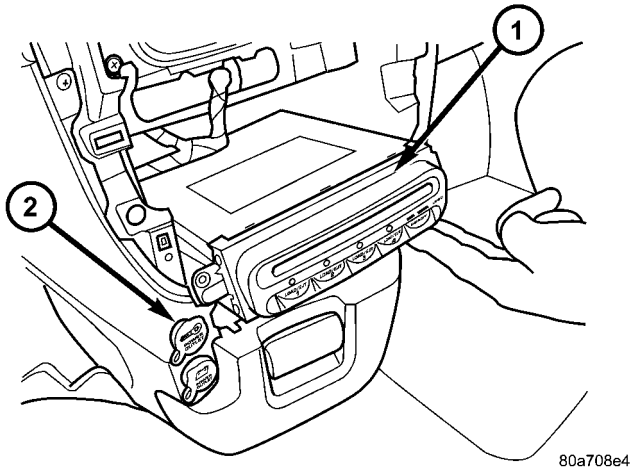

Fig. 10 DVD PLAYER

1 - DVD PLAYER
2 - POWER OUTLET

(3) Disconnect the wire connector from the back of the DVD player.
(4) Remove the DVD player from the vehicle.

INSTALLATION

(1) Connect the wire harness connector to the DVD player.
(2) Insert the DVD player into the instrument panel.
(3) Install mounting screws.
(4) Connect the battery negative cable.

INSTRUMENT PANEL ANTENNA CABLE

REMOVAL

WARNING: ON VEHICLES EQUIPPED WITH AIRBAGS, REFER TO ELECTRICAL, RESTRAINTS BEFORE ATTEMPTING ANY STEERING WHEEL, STEERING COLUMN, OR INSTRUMENT PANEL COMPONENT DIAGNOSIS OR SERVICE. FAILURE TO TAKE THE PROPER PRECAUTIONS COULD RESULT IN ACCIDENTAL AIRBAG DEPLOYMENT AND POSSIBLE PERSONAL INJURY.

(1) Disconnect and isolate the battery negative cable.
(2) Remove glove box (Refer to 23 - BODY/INSTRUMENT PANEL/GLOVE BOX - REMOVAL).
(3) Disconnect extension cable end from antenna cable end.
(4) Disconnect cable hanger clip from HVAC unit.
(5) Remove radio as necessary to gain access to extension cable (Refer to 8 - ELECTRICAL/AUDIO/RADIO - REMOVAL).

CAUTION: Pulling the antenna cable straight out of the radio without pulling on the locking antenna connector could damage the cable or radio.

(6) Disconnect the antenna cable by pulling the locking antenna connector away from the radio (Fig. 11).
(7) Remove cable from vehicle.

INSTALLATION

(1) Install extension cable to vehicle.
(2) Connect extension cable to back of radio.
(3) Install radio (Refer to 8 - ELECTRICAL/AUDIO/RADIO - INSTALLATION).
(4) Connect cable hanger clip to HVAC unit.
(5) Connect extension cable end to antenna cable end.

INSTRUMENT PANEL ANTENNA CABLE (Continued)

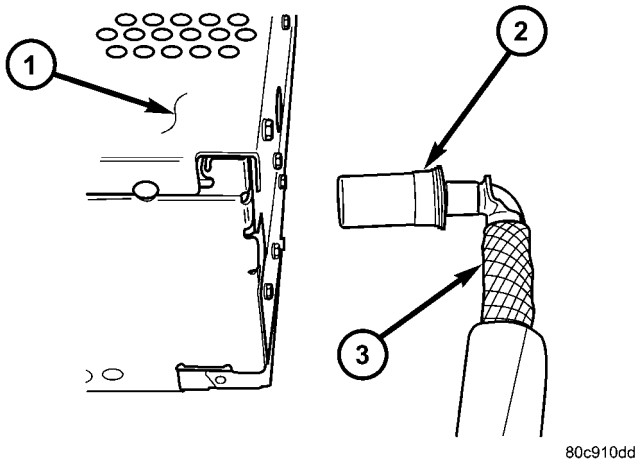

Fig. 11 ANTENNA TO RADIO

1 - RADIO
2 - LOCKING ANTENNA CONNECTOR
3 - INSTRUMENT PANEL ANTENNA CABLE

(6) Install glove box (Refer to 23 - BODY/INSTRUMENT PANEL/GLOVE BOX - INSTALLATION).
(7) Connect the battery negative cable.

QUARTER GLASS INTEGRAL ANTENNA - EXPORT

DESCRIPTION

The quarter glass integral antenna element is bonded to the right rear quarter glass and is replaced with the glass assembly only (Fig. 12).

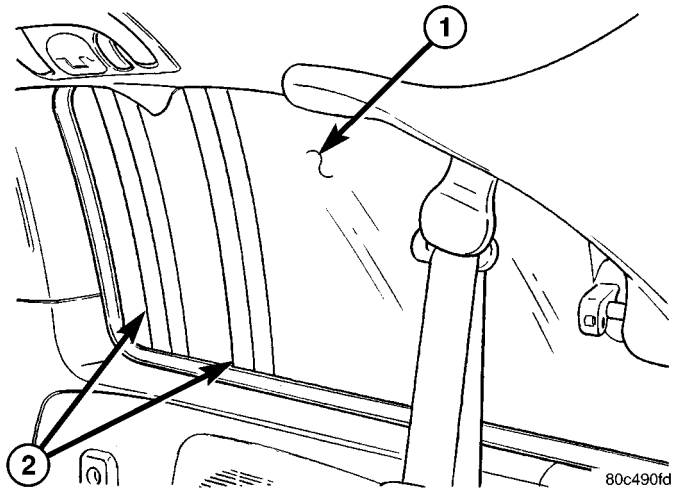

Fig. 12 QUARTER GLASS INTEGRAL ANTENNA

1 - REAR QUARTER GLASS
2 - ANTENNA

OPERATION

The integral antenna receives radio frequencies and sends them to the antenna module for amplification.

DIAGNOSIS AND TESTING

QUARTER GLASS INTEGRAL ANTENNA - EXPORT

The antenna grid pattern is divided into two separate patterns. Each terminal connects to a separate grid pattern, one for AM and the other for FM.

For circuit descriptions and diagrams, refer to the appropriate wiring information.

(1) Disconnect the antenna module connector from the antenna terminals on the glass.

(2) Using an ohmmeter, place a lead on one of the terminals and check each end of the grid pattern connected to this terminal for continuity. If continuity is not present, move one lead through the grid in progression starting at the terminal with the other lead on the terminal until continuity is lost. Repeat procedure for the other terminal. A break in the antenna grid can be repaired using a Mopar Rear Window Defogger Repair Kit (Part Number 4267922) or equivalent. (Refer to 8 - ELECTRICAL/HEATED GLASS/WINDSHIELD GRID - STANDARD PROCEDURE).

RADIO

DESCRIPTION

Available radio receivers for this vehicle include:

- AM/FM/cassette/CD (RAZ or RBP sales code)
- AM/FM/cassette/CD with rear audio (RBU sales code)
- AM/FM/cassette (RBB sales code)
- AM/FM/6–disc CD radio (RBQ sales code)
- AM/FM/CD/Navigation (RB3 sales code)
- AM/FM/CD with CD changer control (RBK sales code) export only
- AM/FM/cassette/CD (RBY,RAD, or RBT sales code) export only

All radio receivers can communicate on the Programmable Communications Interface (PCI) data bus network.

RADIO (Continued)

OPERATION

The radio receiver operates on ignition switched battery current that is available only when the ignition switch is in the On or Accessory/Accessory Delay positions. The electronic digital clock function of the radio operates on fused battery current supplied through the IOD fuse, regardless of the ignition switch position.

For complete circuit diagrams, refer to the appropriate wiring information.

DIAGNOSIS AND TESTING

RADIO

WARNING: ON VEHICLES EQUIPPED WITH AIRBAGS, REFER TO ELECTRICAL, RESTRAINTS BEFORE ATTEMPTING ANY STEERING WHEEL, STEERING COLUMN, OR INSTRUMENT PANEL COMPONENT DIAGNOSIS OR SERVICE. FAILURE TO TAKE THE PROPER PRECAUTIONS COULD RESULT IN ACCIDENTAL AIRBAG DEPLOYMENT AND POSSIBLE PERSONAL INJURY.

Any diagnosis of the Audio system should begin with the use of the DRB III® diagnostic tool. For information on the use of the DRB III®, refer to the appropriate Diagnostic Service Manual.

Refer to the appropriate wiring information.

If the vehicle is equipped with remote radio switches located on the back of the steering wheel spokes, and the problem being diagnosed is related to one of the symptoms listed below, be certain to check the remote radio switches and circuits as described in this group, prior to attempting radio diagnosis or repair.

- Stations changing with no remote radio switch input
- Radio memory presets not working properly
- Volume changes with no remote radio switch input
- Remote radio switch buttons taking on other functions
- CD player skipping tracks
- Remote radio switch inoperative.

CAUTION: The speaker output of the radio is a "floating ground" system. Do not allow any speaker lead to short to ground, as damage to the radio may result.

(1) Check the fuse(s) in the junction block and the Integrated Power Module (IPM). If OK, go to Step 2. If not OK, repair the shorted circuit or component as required and replace the faulty fuse(s).

(2) Check for battery voltage at the fuse in the (IPM). If OK, go to Step 3. If not OK, repair the open circuit to the battery as required.

(3) Turn the ignition switch to the ON position. Check for battery voltage at the fuse in the junction block. If OK, go to Step 4. If not OK, repair the open circuit to the ignition switch as required.

(4) Turn the ignition switch to the OFF position. Remove the radio, but do not unplug the wire harness connectors. Check for continuity between the radio chassis and a good ground. There should be continuity. If OK, go to Step 5. If not OK, repair the open radio chassis ground circuit as required.

(5) Connect the battery negative cable. Turn the ignition switch to the ON position. Check for battery voltage at the fused ignition switch output circuit cavity of the radio wire harness connector. If OK, go to Step 6. If not OK, repair the open circuit as required.

(6) Turn the ignition switch to the OFF position. Check for battery voltage at the fused B(+) circuit cavity of the radio wire harness connector. If OK, replace the faulty radio. If not OK, repair the open circuit to the Ignition-Off Draw (IOD) fuse as required.

REMOVAL

(1) Disconnect and isolate the battery negative cable.

(2) Remove cup holder.

(3) Remove trim panel above cupholder by pulling straight out.

(4) Remove center instrument panel trim panel.

(5) Remove screws holding radio to instrument panel.

(6) Pull radio rearward to gain access to the back of radio (Fig. 13).

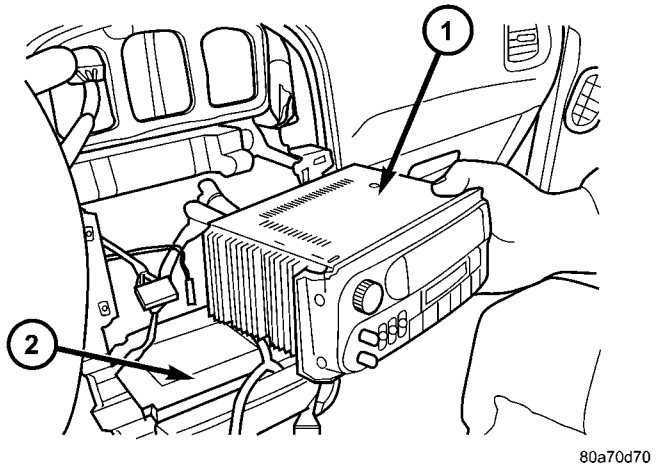

Fig. 13 RADIO

1 - RADIO
2 - CD-PLAYER

RADIO (Continued)

CAUTION: Pulling the antenna cable straight out of the radio without pulling on the locking antenna connector could damage the cable or radio.

(7) Disconnect the antenna cable by pulling the locking antenna connector away from the radio (Fig. 14).

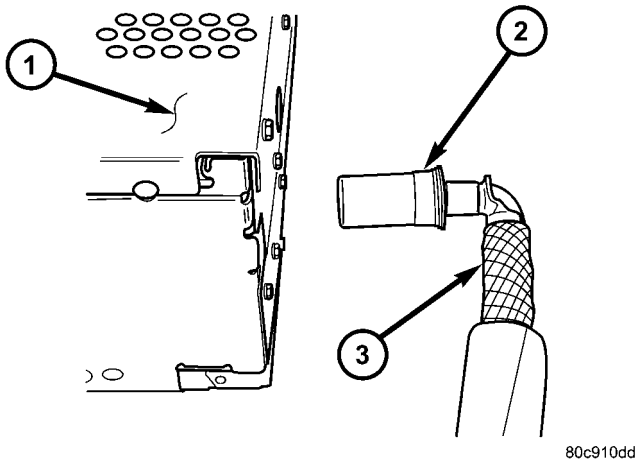

Fig. 14 ANTENNA TO RADIO

1 - RADIO
2 - LOCKING ANTENNA CONNECTOR
3 - INSTRUMENT PANEL ANTENNA CABLE

(8) Disconnect the wire connectors from the back of the radio.

INSTALLATION

(1) Connect wire harness to back of radio.
(2) Connect antenna cable to back of radio.
(3) Position radio into instrument panel.
(4) Install screws holding radio to instrument panel.
(5) Install center instrument panel trim.
(6) Install trim panel above cupholder.
(7) Install cupholder.
(8) Connect battery negative cable.

RADIO NOISE SUPPRESSION COMPONENTS

DESCRIPTION

Radio noise suppression devices are factory-installed standard equipment on this vehicle. Radio Frequency Interference (RFI) and ElectroMagnetic Interference (EMI) can be produced by any on-board or external source of electromagnetic energy. These electromagnetic energy sources can radiate electromagnetic signals through the air, or conduct them through the vehicle electrical system.

When the audio system converts RFI or EMI to an audible acoustic wave form, it is referred to as radio noise. This undesirable radio noise is generally manifested in the form of “buzzing,” “hissing,” “popping,” “clicking,” “crackling,” and/or “whirring” sounds. In most cases, RFI and EMI radio noise can be suppressed using a combination of vehicle and component grounding, filtering and shielding techniques. This vehicle is equipped with factory-installed radio noise suppression devices that were designed to minimize exposure to typical sources of RFI and EMI; thereby, minimizing radio noise complaints.

Factory-installed radio noise suppression is accomplished primarily through circuitry or devices that are integral to the factory-installed radios, audio power amplifiers and other on-board electrical components such as generators, wiper motors, blower motors, and fuel pumps that have been found to be potential sources of RFI or EMI.

OPERATION

There are two common strategies that can be used to suppress Radio Frequency Interference (RFI) and ElectroMagnetic Interference (EMI) radio noise. The first suppression strategy involves preventing the production of RFI and EMI electromagnetic signals at their sources. The second suppression strategy involves preventing the reception of RFI and EMI electromagnetic signals by the audio system components.

The use of braided ground straps in key locations is part of the RFI and EMI prevention strategy. These ground straps ensure adequate ground paths, particularly for high current components such as many of those found in the starting, charging, ignition, engine control and transmission control systems. An insufficient ground path for any of these high current components may result in radio noise caused by induced voltages created as the high current seeks alternative ground paths through components or circuits intended for use by, or in close proximity to the audio system components or circuits.

Preventing the reception of RFI and EMI is accomplished by ensuring that the audio system components are correctly installed in the vehicle. Loose, corroded or improperly soldered wire harness connections, improperly routed wiring and inadequate audio system component grounding can all contribute to the reception of RFI and EMI. A properly grounded antenna body and radio chassis, as well as a shielded antenna coaxial cable with clean and tight connections will each help reduce the potential for reception of RFI and EMI.

REMOTE SWITCHES

DESCRIPTION

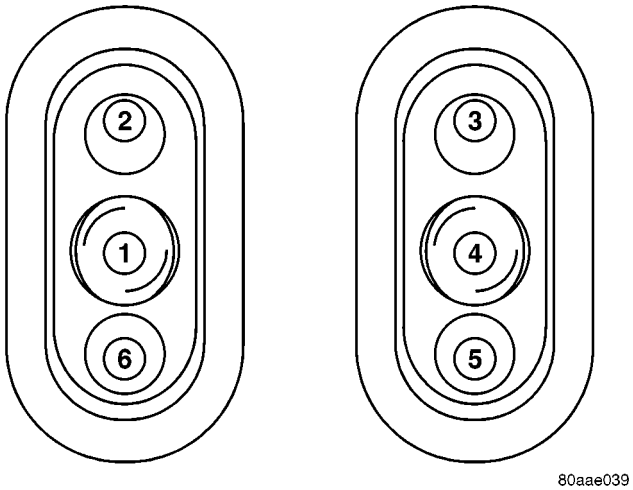

Fig. 15 Remote Radio Switch Operational View

1 - PRESET SEEK
2 - SEEK UP
3 - VOLUME UP
4 - MODE
5 - VOLUME DOWN
6 - SEEK DOWN

Two rocker-type switches (if equipped) are mounted on the back (instrument panel side) of the steering wheel spokes (Fig. 15). The switch on the left spoke is the seek switch and has seek up, seek down, and preset station advance functions. The switch on the right spoke is the volume control switch and has volume up, and volume down functions. The switch on the right spoke also includes a “mode” control that allows the driver to sequentially select AM radio, FM radio, cassette player, CD player or CD changer (if equipped).

OPERATION

These switches are resistor multiplexed units that are hard-wired to the Body Control Module (BCM) through the clockspring. The BCM sends the proper messages on the Programmable Communications Interface (PCI) data bus network to the radio receiver. For diagnosis of the BCM or the PCI data bus, the use of a DRB III® scan tool and the proper Diagnostic Procedures manual are recommended.

DIAGNOSIS AND TESTING

REMOTE SWITCHES

WARNING: ON VEHICLES EQUIPPED WITH AIRBAGS, REFER TO ELECTRICAL, RESTRAINTS BEFORE ATTEMPTING ANY STEERING WHEEL, STEERING COLUMN, OR INSTRUMENT PANEL COMPONENT DIAGNOSIS OR SERVICE. FAILURE TO TAKE THE PROPER PRECAUTIONS COULD RESULT IN ACCIDENTAL AIRBAG DEPLOYMENT AND POSSIBLE PERSONAL INJURY.

Any diagnosis of the Audio system should begin with the use of the DRB III® diagnostic tool. For information on the use of the DRB III®, refer to the appropriate Diagnostic Service Manual.

Refer to the appropriate wiring information.

(1) Disconnect and isolate the battery negative cable.

(2) Remove the remote radio switch(es) from the steering wheel (Fig. 16). (Refer to 8 - ELECTRICAL/ AUDIO/REMOTE SWITCHES - REMOVAL).

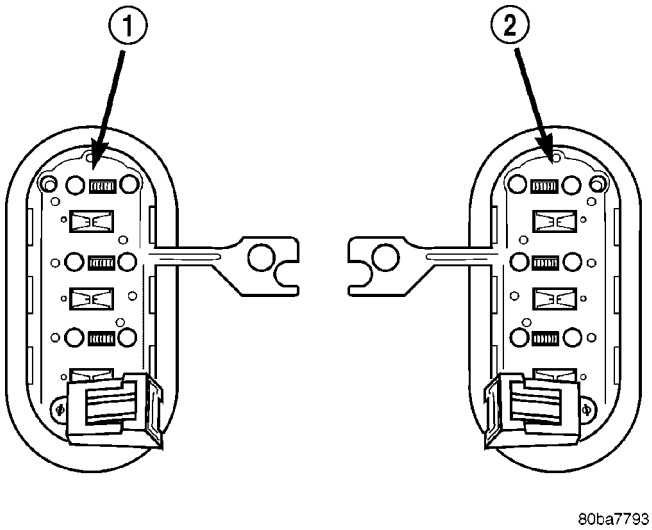

Fig. 16 REMOTE RADIO SWITCHES

1 - BLACK (LEFT) SWITCH
2 - WHITE (RIGHT) SWITCH

(3) Use an ohmmeter to check the switch resistance as shown in the Remote Radio Switch Test table.

REMOTE SWITCHES (Continued)

REMOTE RADIO SWITCH TEST

Switch	Switch Position	Resistance
Right (White)	Volume Up	1.210 Kilohms
Right (White)	Volume Down	3.010 Kilohms
Right (White)	Mode Advance	0.0511 Kilohms
Left (Black)	Seek Up	0.261 Kilohms
Left (Black)	Seek Down	0.681 Kilohms
Left (Black)	Pre-Set Station Advance	0.162 Kilohms

NOTE: The right remote radio switch back is white in color. The left switch back is black in color. The right/left remote radio switch orientation is with the steering wheel installed, and driver in drivers seat.

(4) If the switch resistance checks OK, go to Step 5. If not OK, replace the faulty switch.

(5) Check for continuity between the ground circuit cavity of the switch wire harness connector and a good ground. There should be continuity. If OK, go to Step 6. If not OK, repair the open circuit as required.

(6) Unplug the 24-way white wire harness connector from the Body Control Module (BCM). Check for continuity between the radio control circuit cavity of the remote radio switch wire harness connector and a good ground. There should be no continuity. If OK, go to Step 7. If not OK, repair the short circuit as required.

(7) Check for continuity between the radio control circuit cavities of the remote radio switch wire harness connector and the BCM wire harness connector. There should be continuity. If OK, refer to the proper Diagnostic Procedures manual to test the BCM and the PCI data bus. If not OK, repair the open circuit as required.

REMOVAL

WARNING: ON VEHICLES EQUIPPED WITH AIRBAGS, REFER TO ELECTRICAL, RESTRAINTS BEFORE ATTEMPTING ANY STEERING WHEEL, STEERING COLUMN, OR INSTRUMENT PANEL COMPONENT DIAGNOSIS OR SERVICE. FAILURE TO TAKE THE PROPER PRECAUTIONS COULD RESULT IN ACCIDENTAL AIRBAG DEPLOYMENT AND POSSIBLE PERSONAL INJURY.

(1) Disconnect and isolate the battery negative cable.

(2) Remove the driver side airbag (Refer to 8 - ELECTRICAL/RESTRAINTS/DRIVER AIRBAG - REMOVAL).

(3) Remove the steering wheel (Refer to 19 - STEERING/COLUMN/STEERING WHEEL - REMOVAL).

(4) Unplug the wire harness connector from the remote radio switch (es).

(5) Remove three screws securing steering wheel rear cover.

(6) Remove the remote radio switch from the steering wheel by depressing tabs on each side of each switch.

NOTE: The right remote radio switch back is white in color. The left switch back is black in color. The right/left remote radio switch orientation is with the steering wheel installed, and driver in drivers seat.

INSTALLATION

WARNING: ON VEHICLES EQUIPPED WITH AIRBAGS, REFER TO ELECTRICAL, RESTRAINTS BEFORE ATTEMPTING ANY STEERING WHEEL, STEERING COLUMN, OR INSTRUMENT PANEL COMPONENT DIAGNOSIS OR SERVICE. FAILURE TO TAKE THE PROPER PRECAUTIONS COULD RESULT IN ACCIDENTAL AIRBAG DEPLOYMENT AND POSSIBLE PERSONAL INJURY.

(1) Install remote radio switch to the steering wheel.

(2) Install three screws securing steering wheel rear cover.

(3) Connect the wire harness to the remote radio switch.

(4) Install the steering wheel (Refer to 19 - STEERING/COLUMN/STEERING WHEEL - INSTALLATION).

(5) Install the driver side airbag (Refer to 8 - ELECTRICAL/RESTRAINTS/DRIVER AIRBAG - INSTALLATION).

(6) Connect the battery negative cable.

SPEAKER

DIAGNOSIS AND TESTING

SPEAKER

WARNING: DISABLE THE AIRBAG SYSTEM BEFORE ATTEMPTING ANY STEERING WHEEL, STEERING COLUMN, SEAT BELT TENSIONER, SIDE AIRBAG, OR INSTRUMENT PANEL COMPONENT DIAGNOSIS OR SERVICE. DISCONNECT AND ISOLATE THE BATTERY NEGATIVE (GROUND) CABLE, THEN WAIT TWO MINUTES FOR THE AIRBAG SYSTEM CAPACITOR TO DISCHARGE BEFORE PERFORMING FURTHER DIAGNOSIS OR SERVICE. THIS IS THE ONLY SURE WAY TO DISABLE THE AIRBAG SYSTEM. FAILURE TO TAKE THE PROPER PRECAUTIONS COULD RESULT IN ACCIDENTAL AIRBAG DEPLOYMENT AND POSSIBLE PERSONAL INJURY.

Any diagnosis of the Audio system should begin with the use of the DRB III® diagnostic tool. For information on the use of the DRB III®, refer to the appropriate Diagnostic Service Manual.

(1) If all speakers are inoperative, check the radio fuses in the Junction Block (JB). If OK, go to Step 2. If not OK, repair the shorted circuit or component as required and replace the faulty fuse.

(2) Check the amplifier fuse (if equipped) in the junction block. If OK, go to Step 3. If not OK, repair the shorted circuit or component as required and replace the faulty fuse.

(3) Turn the ignition switch to the ON position. Turn the radio receiver ON. Adjust the balance and fader control controls to check the performance of each individual speaker. Note the speaker locations that are not performing correctly. Go to Step 4.

(4) Turn the radio receiver OFF. Turn the ignition OFF. Disconnect and isolate the battery negative cable. If vehicle is **not** equipped with a amplifier, remove the radio receiver. If vehicle is equipped with an amplifier. disconnect wire harness connector at output side of amplifier. Go to Step 4.

(5) Check both the speaker feed (+) circuit and return (-) circuit cavities for the inoperative speaker at the radio receiver wire harness connector for continuity to ground. There should be no continuity. If OK, go to Step 5. If not OK, repair the shorted speaker feed (+) and/or return (-) circuits(s) to the speaker as required.

(6) Disconnect wire harness connector at the inoperative speaker. Check for continuity between the speaker feed (+) circuit cavities of the radio receiver wire harness connector or if equipped, the amplifier wire harness connector and the speaker wire harness connector. Repeat the check between the speaker return (-) circuit cavities of the radio receiver wire harness connector and the speaker wire harness connector. In each case, there should be continuity. If OK, replace the faulty speaker. If not OK, repair the open speaker feed (+) and/or return (-) circuits(s) as required.

REMOVAL

D-PILLAR SPEAKER

(1) Disconnect and isolate the battery negative cable.

(2) Remove rear header trim (right side speaker).

(3) Remove jack cover (left side speaker).

(4) Remove liftgate scuff plate.

(5) Remove upper seat belt bolt. (Refer to 8 - ELECTRICAL/RESTRAINTS/SEAT BELT OUTBOARD FRONT - REMOVAL).

(6) Partially remove quarter trim panel to access the D-pillar speaker.

(7) Slide the speaker from the retainer (Fig. 17).

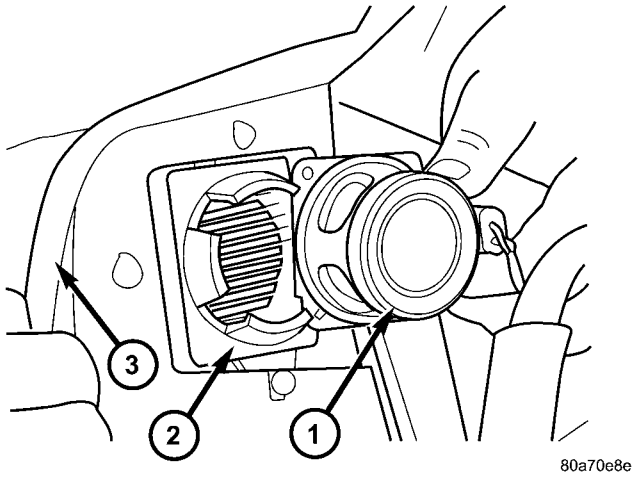

Fig. 17 D-PILLAR SPEAKER

1 - SPEAKER
2 - RETAINER
3 - TRIM PANEL

(8) Disconnect the wire harness connector from the speaker.

SPEAKER (Continued)

FRONT DOOR SPEAKER

(1) Disconnect and isolate the battery negative cable.

(2) Remove the front door trim panel. (Refer to 23 - BODY/DOOR - FRONT/TRIM PANEL - REMOVAL).

(3) Remove the speaker mounting screws (Fig. 18).

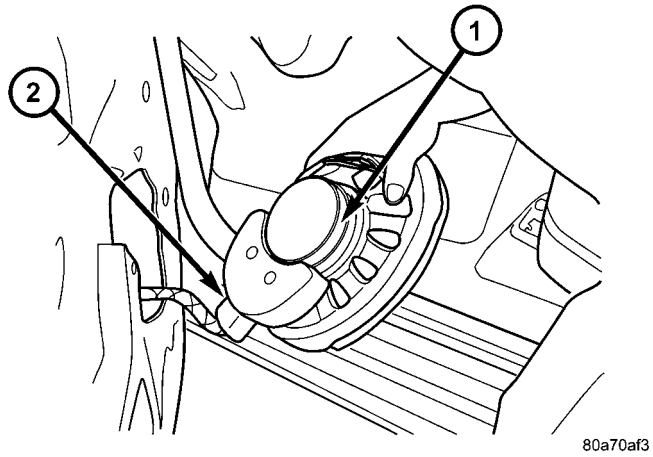

Fig. 18 DOOR SPEAKER

1 - SPEAKER
2 - WIRE HARNESS CONNECTOR

(4) Disconnect wire harness connector and remove speaker from door.

INSTRUMENT PANEL SPEAKER

(1) Disconnect and isolate the battery negative cable.

(2) Remove the A-pillar trim. (Refer to 23 - BODY/INTERIOR/A-PILLAR TRIM - REMOVAL).

(3) Remove instrument panel top pad (Refer to 23 - BODY/INSTRUMENT PANEL/INSTRUMENT PANEL TOP PAD - REMOVAL).

(4) Remove speaker screws (Fig. 19).

(5) Disconnect wire harness connector and remove speaker.

QUARTER PANEL SPEAKER

(1) Disconnect and isolate the battery negative cable.

(2) Remove the quarter trim bolster (Refer to 23 - BODY/INTERIOR/QUARTER TRIM BOLSTER - REMOVAL).

(3) Remove speaker retaining screws (Fig. 20).

(4) Disconnect wire harness connector and remove speaker.

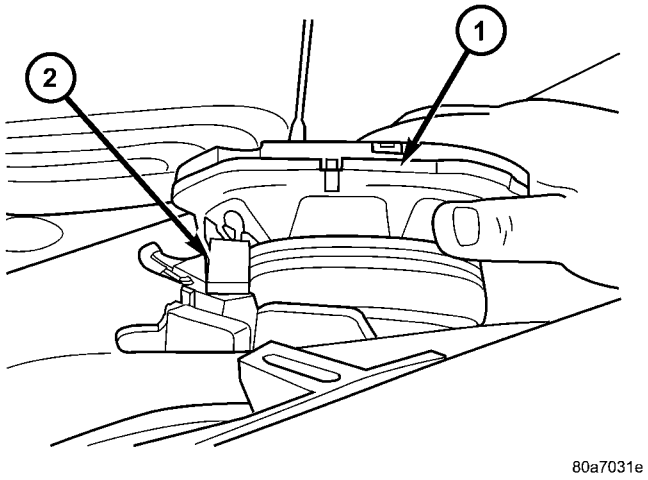

Fig. 19 INSTRUMENT PANEL SPEAKER

1 - SPEAKER
2 - WIRE HARNESS CONNECTOR

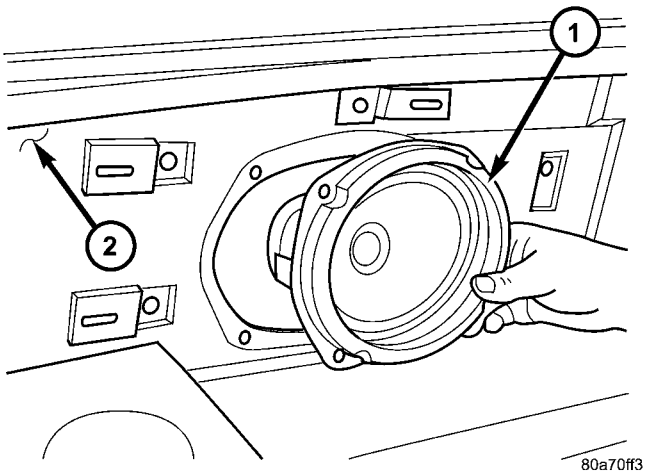

Fig. 20 QUARTER PANEL SPEAKER

1 - SPEAKER
2 - TRIM PANEL

INSTALLATION

D-PILLAR SPEAKER

(1) Connect the wire harness connector to the speaker.

(2) Slide the speaker into the retainer.

(3) Install quarter panel trim.

(4) Install upper seat belt bolt (right side).

(5) Install liftgate scuff plate.

(6) Install rear header trim (right side).

(7) Install jack cover (left side).

(8) Connect battery negative cable.

SPEAKER (Continued)

FRONT DOOR SPEAKER

(1) Connect the wire harness connector and install speaker to door.
(2) Install the speaker mounting screws.
(3) Install the front door trim panel (Refer to 23 - BODY/DOOR - FRONT/TRIM PANEL - INSTALLATION).
(4) Connect battery negative cable.

INSTRUMENT PANEL SPEAKER

(1) Connect the wire harness connector and install speaker to instrument panel.
(2) Install the speaker mounting screws.
(3) Install instrument panel top pad (Refer to 23 - BODY/INSTRUMENT PANEL/INSTRUMENT PANEL TOP PAD - INSTALLATION).
(4) Install A-pillar trim (Refer to 23 - BODY/INTERIOR/A-PILLAR TRIM - INSTALLATION).
(5) Connect battery negative cable.

QUARTER PANEL SPEAKER

(1) Connect the wire harness connector and install speaker to trim panel.
(2) Install the speaker mounting screws.
(3) Install quarter trim bolster (Refer to 23 - BODY/INTERIOR/QUARTER TRIM BOLSTER - INSTALLATION).
(4) Connect battery negative cable.

VIDEO SCREEN

DESCRIPTION

The video screen (if equipped) is mounted on the headliner behind the driver and front passenger seat. Pressing the release button will allow the screen to be opened.

OPERATION

Operating instructions for the factory installed video screen can be found in the owner's manual provided with this vehicle.

REMOVAL

(1) Disconnect and isolate the battery negative battery cable.
(2) Remove the lens bezel.
(3) Remove the rear console screws (Fig. 21).

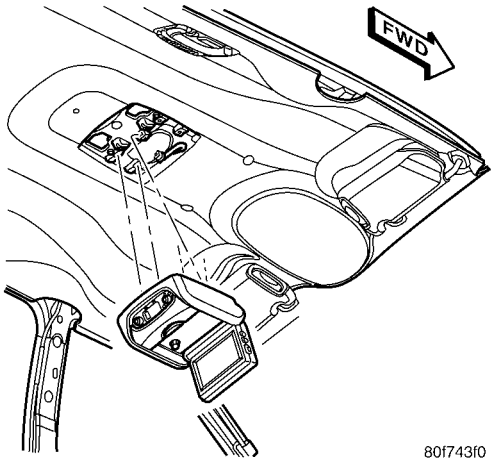

Fig. 21 VIDEO SCREEN

(4) Remove the rear A/C trim bezel.
(5) Disconnect A/C wire harness connector.
(6) Remove remaining mounting screws.
(7) Disconnect wire harness connectors.

INSTALLATION

(1) Connect wire harness connectors.
(2) Install front mounting screws.
(3) Install the rear A/C trim bezel.
(4) Install the rear mounting screws.
(5) Install the lens bezel.
(6) Connect the battery negative cable.

CHIME/BUZZER

TABLE OF CONTENTS

page

CHIME/BUZZER
DESCRIPTION 1
OPERATION 1
WARNING 2
DIAGNOSIS AND TESTING - CHIME SYSTEM . . 2
PARK ASSIST DISPLAY
DESCRIPTION 3
OPERATION 3
REMOVAL 4
INSTALLATION 4

page

PARK ASSIST MODULE
DESCRIPTION 4
OPERATION 5
REMOVAL 5
INSTALLATION 6
PARK ASSIST SENSOR
DESCRIPTION 6
OPERATION 6
REMOVAL 6
INSTALLATION 6

CHIME/BUZZER

DESCRIPTION

The chime/buzzer system provides the driver with warning chimes for:

- Seat Belt
- Exterior Lamps ON
- Key-In Ignition
- Engine Temperature Critical
- Turn Signals ON
- Dome Lamp ON
- Low Oil Pressure
- High Speed Warning
- Warning Lamp Announcement
- Key-In Accessory
- Low/High Tire Pressure
- Service Tire Pressure Monitor (TPM)

HIGH SPEED WARNING - EXPORT

The chime will sound, acting as a warning to the driver that the vehicle speed has exceeded 120 ± 3 Kp/h (75 ± 2 mph).

Refer to the proper body diagnostic information diagnosis and testing with a scan tool.

PARK ASSIST SYSTEM

The Park Assist System is an electronic parking aid that alerts the driver to obstacles which are located immediately behind the vehicle. Objects are sensed using ultrasonic sound waves. When an object is detected, the system will give the driver visual and audible warnings. The system is customer programmable through the Electronic Vehicle Information Center (EVIC) but will be enabled from the factory as a default.

The major components of the park assist system are:

- **Park Assist Module** - supplies voltage to the object detection sensors and park assist display. It triggers the sensors, analyzes the echo delay times and calculates obstacle distances. It sends display information to the park assist display, performs system diagnostics, and communicates via the Programmable Communication Interface (PCI) date bus network.
- **Park Assist Sensors** - there are four sensors located in the rear bumper that generate ultrasonic pulses when triggered by the park assist module. The sensors signal the park assist module when reflected ultrasonic pulses are received.
- **Park Assist Display** - there are sixteen Light Emitting Diode (LED) indicators which provide indication of relative distance to obstacles. When the system is engaged and no obstacles are detected, the two outermost yellow LED's are lit at reduced brightness to show the system is working. As the distance to a detected obstacle decreases, more yellow LED's towards the center of the display illuminate.

For diagnosis and testing of the park assist system, use a scan tool and the appropriate body diagnostic information.

OPERATION

Refer to the proper Body Diagnostic Procedures manual for complete chime/buzzer operation and conditions for operation.

HIGH SPEED WARNING - EXPORT

When the vehicle speed sensor sees 120 ± 3 Km/h (75 ± 2 mph), it sends a PCI data bus message to the Body Control Module (BCM). The BCM then turns on the chime to let the driver know that the vehicle has reached a speed greater than 120 ± 3 Km/h (75 ± 2 mph). This audible message will continue until the vehicle is slowed below the predetermined speed.

CHIME/BUZZER (Continued)

PARK ASSIST SYSTEM

The Park Assist System display activates an audible tone that changes from intermittent to continuous as the final two Light Emitting Diodes (LED's) are illuminated on one side or both sides of the display.

The system detection length from the rear of the vehicle is 0.3 meters to 1.5 meters. This area extends around the rear side of the vehicle. The system detection height from the ground is 0.2 meters to about 1.5 meters. The radio mutes when the system activates its audible tone.

When the driver selects Reverse the system scans for objects behind the vehicle using four sensors located in the rear bumper. A warning display above the rear window provides both visible and audible warnings indicating the range of the object.

The system is active only when the transmission gear selector is in reverse for vehicle speeds less than 16 Km/h (10 mph). If the vehicle's Parking/Emergency Brake is applied, the system is deactivated.

The display contains two sets of yellow and red Light Emitting Diode's (LED's) that the driver can see as they look over their shoulder while backing up. Each side of the vehicle has its own warning LED's. The system provides a visual warning by illuminating one or more yellow LED's as the vehicle gets closer to the object. As the vehicle continues to approach the object, one red LED is illuminated and the system emits a series of short beeps. The tone will remain constant and both red LED's are illuminated once the vehicle is within 12 inches (30.5 cm) of the object.

The system can be turned ON or OFF through the Electronic Vehicle Information Center (EVIC) when the vehicle is in PARK. If the park assist system is turned OFF, a single chime will sound and the EVIC will display the following message "REAR PARK ASSIST OFF", when the vehicle is in reverse.

- Ensure that the rear bumper is free of dirt and debris to keep the system operating properly.
- Jackhammers, large trucks, and other vibrations could affect the performance of the system.
- Ensure that the parking brake is not applied.

If "Service Park Assist System" appears in the EVIC after making sure the rear bumper is clean, proceed to diagnose the system using a scan tool and the appropriate diagnostic information.

WARNING

On vehicles equipped with airbags, disable the airbag system before attempting any steering wheel, steering column, or instrument panel component diagnosis or service. Disconnect and isolate the battery negative (ground) cable, then wait two minutes for the airbag system capacitor to discharge before performing further diagnosis or service. This is the only sure way to disable the airbag system. Failure to take the proper precautions could result in accidental airbag deployment, personal injury, or death.

DIAGNOSIS AND TESTING - CHIME SYSTEM

Refer to the proper Body Diagnostic Procedures manual for complete Diagnosis and Testing of the Chime System.

NO TONE WHEN IGNITION SWITCH IS TURNED ON AND DRIVER'S SEAT BELT IS NOT BUCKLED.

(1) Using a DRB lll® scan tool, actuate chime (BCM actuates).

(2) Using a voltmeter, check for voltage:

(a) BCM has two battery feeds at pin 1 and pin 5 of the 6–way connector.

(b) Pin 5 of the (BX2) 32 way connector of the BCM for ignition feed.

(c) Check voltage (PX2) connector, pin 34 for 12v.

(d) If voltage OK, go to step Step 3

(e) If NO voltage repair as necessary. Refer to the appropriate wiring information. The wiring information includes wiring diagrams, proper wire and connector repair procedures, further details on wire harness routing and retention, as well as pin-out and location views for the various wire harness connectors, splices and grounds.

(3) Check drivers seat belt buckle switch input (from Occupant Restraint Controller (ORC) for a closed circuit when not buckled. If input not seen, look for open in wiring or switch. The switch is grounded when belt is not buckled.

(4) Verify Programmable Communication Interface (PCI) data bus communication between ORC and BCM.

CHIME/BUZZER (Continued)

NO FASTEN SEAT BELT LAMP WHEN IGNITION SWITCH IS TURNED ON.

(1) Check for burned out lamp.
(2) Using a voltmeter check for voltage at the cluster connector:
(a) Pin 2 of the mechanical instrument cluster for battery feed.
(b) Pin 11 of the mechanical instrument cluster for ignition voltage.
(3) Repair as necessary.

FASTEN SEAT BELT LAMP OR TONE CONTINUES FOR MORE THAN 10 SECONDS AFTER SEAT BELTS ARE FASTENED AND DRIVER'S DOOR IS CLOSED.

Refer to the proper Body Diagnostic Procedures manual.

NO TONE WHEN PARK OR HEADLAMPS ARE ON AND DRIVER'S DOOR IS OPEN.

Make sure ignition is in lock position with the key removed.
(1) Check the BCM DTC's and BCM sensors to verify the door is open. Repair as necessary.
(2) Actuate Chime (BCM actuates).
(3) Inspect BCM connectors and wires for proper connection.
(4) Measure with a voltmeter the voltage (12v) on BCM connector (PX2) pin 34 with harness connected.
(5) Check BCM sensors to verify headlamp switch position.

PARK ASSIST DISPLAY

DESCRIPTION

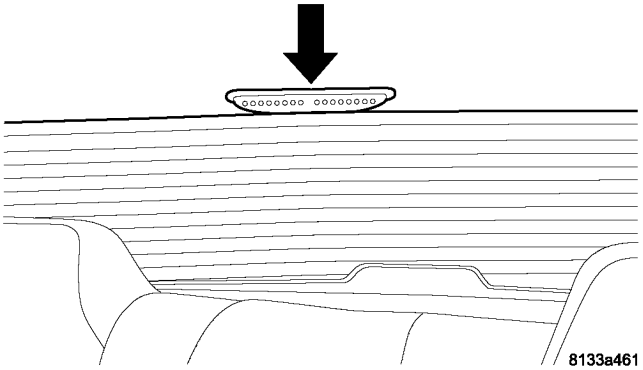

Fig. 1 PARK ASSIST DISPLAY

The Park Assist Display is located in the rear of vehicle, over the rear window in the headliner (Fig. 1). It is a molded plastic unit housing Light Emitting Diodes (LED's) and a chime module. Located in the rear of the vehicle for easy visual reference when the driver is backing up.

The display is used to alert the driver of any obstacles detected in the rear of the vehicle. The chime or audible signal also comes from the display unit.

OPERATION

When the ignition is put in the RUN position, all the Light Emitting Diodes (LED's) will illuminate for approximately one second. This will be interrupted if the system senses an obstacle.

The ready status will be sensed by the outermost two yellow LED's being illuminated at 50% intensity. As the obstacle is sensed, the yellow LED's will start illuminating inward until the object in approximately one foot away and then the inner red LED will light.

The display is sensitive to which side of the rear of the vehicle that the object is detected. If on the left rear, the left segments will light and the same for the right side of the vehicle.

PARK ASSIST DISPLAY (Continued)

CORRELATION OF LED SEGMENTS TO DISTANCE

DISPLAY LED	DISTANCE		LED COLOR	AUDIBLE SIGNAL
	REAR CORNERS	REAR CENTER		
1st LED		150 cm (4.9 ft.)	Yellow	None
2nd LED		120 cm (3.9 ft.)	Yellow	None
3rd LED		70 cm (2.2 ft.)	Yellow	None
4th LED	60 cm (1.9 ft.)	60 cm (1.9 ft.)	Yellow	None
5th LED	50 cm (1.6 ft.)	50 cm (1.6 ft.)	Yellow	None
6th LED	40 cm (1.3 ft.)	40 cm (1.3 ft.)	Yellow	None
7th LED	30 cm (12 in.)	30 cm (12 in.)	Red	30 cm (12 in.) Intermittant
8th LED	15 cm (6 in.)	20 cm (8 in.)	Red	20 cm (8 in.) Continuous

There will be an audible tone when the object gets within 30 cm (1 ft.) from the rear of the vehicle.

To diagnose and test the Park Assist System, use a scan tool and the appropriate diagnostic information.

REMOVAL

(1) Open hood.

(2) Disconnect and isolate the battery negative cable.

(3) Open liftgate.

(4) Lower the headliner in the rear of the vehicle in the liftgate opening. Follow the headliner removal procedure for the rear of the headliner (Refer to 23 - BODY/INTERIOR/HEADLINER - REMOVAL).

(5) Bend the retaining tabs upwards to allow the park assist display to drop out of the headliner opening (Fig. 2).

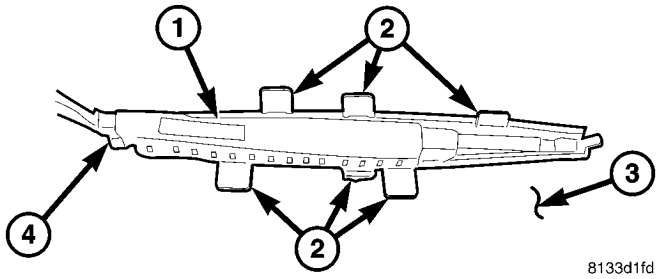

Fig. 2 PARK ASSIST DISPLAY - REMOVE/INSTALL

1 - PARK ASSIST DISPLAY
2 - DISPLAY RETAINING TABS
3 - HEADLINER
4 - DISPLAY ELECTRICAL CONNECTOR

(6) Disconnect the display electrical connector (Fig. 2) and remove from vehicle.

INSTALLATION

(1) Position the Park Assist Display in headliner opeing and connect the display electrical connector (Fig. 2).

(2) Bend the retaining tabs down behind the headliner (Fig. 2).

(3) Raise the headliner in the rear of the vehicle in the liftgate opening (Refer to 23 - BODY/INTERIOR/HEADLINER - INSTALLATION).

(4) Close liftgate.

(5) Connect the battery negative cable.

(6) Close hood.

(7) Verify vehicle and system operation.

PARK ASSIST MODULE

DESCRIPTION

The Park Assist Module is located on the left side of the vehicle, behind the quarter trim panel, just behind the C-pillar (Fig. 3). It is has a molded plastic housing which housing internal circuitry and one electrical connector. There are two mounting tabs that affix the module to the left inner quarter trim panel with two screws.

The module has a number of functions:

- Supply voltage to the sensors and display.
- Disconnection of the display with bus idle and over voltage Vmax.
- Triggering the sensors.
- Analyze echo delay times and calculate obstacle distances.
- Bi-directional data communication to the display for diagnosis.

PARK ASSIST MODULE (Continued)

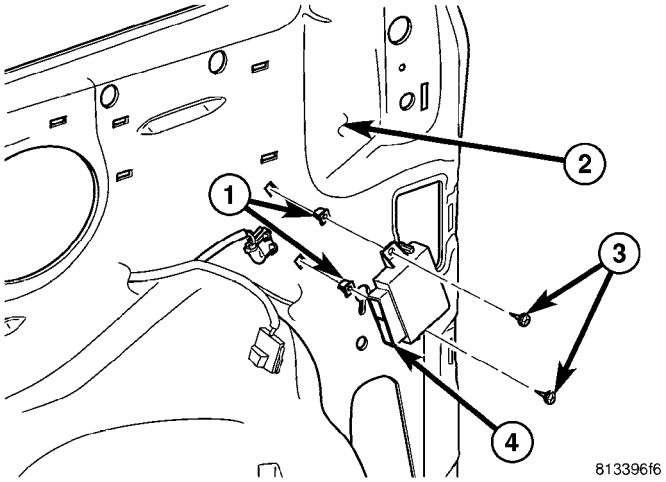

Fig. 3 PARK ASSIST MODULE - LOCATION

1 - RETAINING SCREW J-CLIPS
2 - LEFT QUARTER PANEL/C-PILLAR
3 - MODULE RETAINING SCREWS
4 - PARK ASSIST MODULE

- System diagnostics - diagnosis and error handling (sensors, display, module).
- Data exchange over the Programmable Communication Interface (PCI) data bus.

OPERATION

The module has a number of functions:

- Supply voltage to the sensors and display.
- Disconnection of the display with bus idle and over voltage Vmax.
- Triggering the sensors.
- Analyze echo delay times and calculate obstacle distances.
- Bi-directional data communication to the display for diagnosis.
- System diagnostics - diagnosis and error handling (sensors, display, module).
- Data exchange over the Programmable Communication Interface (PCI) data bus.

The system detection length from the rear of the vehicle is 0.3 meters to 1.5 meters. This area extends around the rear side of the vehicle. The system detection height from the ground is 0.2 meters to about 1.5 meters. The radio mutes when the system activates its audible tone.

When the driver selects Reverse, the system scans for objects behind the vehicle using four sensors located in the rear bumper. Objects can be detected from up to 1.5 meters. A warning display above the rear window provides both visible and audible warnings indicating the range of the object.

The system is active only when the vehicle is in reverse for vehicle speeds less than 16 Km/h (10 mph). If the vehicles Parking/Emergency Brake is applied, the system is deactivated.

The display contains two sets of yellow and red Light Emitting Diode's (LED's) that the driver can see as they look over their shoulder while backing up. Each side of the vehicle has its own warning LED's. The system provides a visual warning by illuminating one or more yellow LED's as the vehicle gets closer to the object. As the vehicle continues to approaches the object, one red LED is illuminated and the system emits a series of short beeps. The tone will remain constant and both red LED's are illuminated once the vehicle is within 12 inches (30.5 cm) of the object.

The system can be turned ON or OFF through the Electronic Vehicle Information Center (EVIC) when the vehicle is in PARK. If the park assist system is turned OFF, a single chime will sound and the EVIC will display the following message “REAR PARK ASSIST OFF”, when the vehicle is in reverse.

- Ensure that the rear bumper is free of dirt and debris to keep the system operating properly.
- Jackhammers, large trucks, and other vibrations could affect the performance of the system.
- Ensure that the parking brake is not applied.

If “Service Park Assist System” appears in the EVIC after making sure the rear bumper is clean, proceed to diagnose the system using a scan tool and the appropriate diagnostic information.

To diagnose the Park Assist Module, use a scan tool and the appropriate body diagnostic information.

REMOVAL

(1) Open hood.
(2) Disconnect and isolate the battery negative cable.
(3) Remove the left quarter trim panel (Refer to 23 - BODY/INTERIOR/QUARTER TRIM PANEL - REMOVAL).

PARK ASSIST MODULE (Continued)

(4) Disconnect the Park Assist Module electrical connector (Fig. 4).

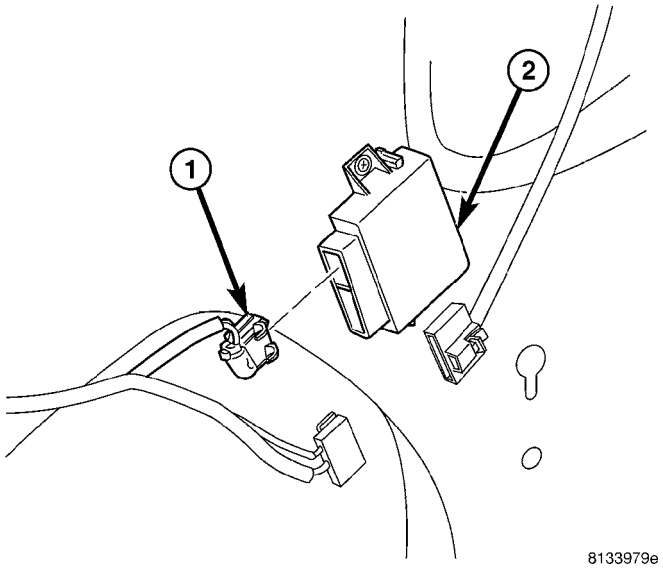

Fig. 4 PARK ASSIST MODULE ELECTRICAL CONNECTOR

1 - MODULE ELECTRICAL CONNECTOR
2 - PARK ASSIST MODULE

(5) Remove the two attaching screws and separate the module from vehicle (Fig. 3).

INSTALLATION

(1) Position the Park Assist Module and install the two attaching screws (Fig. 3). Torque screws to 3.5 N·m (30 in. lbs.).

(2) Connect the Park Assist Module electrical connector (Fig. 4).

(3) Install the left quarter trim panel (Refer to 23 - BODY/INTERIOR/QUARTER TRIM PANEL - INSTALLATION).

(4) Connect the battery negative cable.

(5) Close hood.

(6) Verify vehicle and system operation.

PARK ASSIST SENSOR

DESCRIPTION

The Park Assist Sensors are located in the rear bumper fascia mounted equally apart (Fig. 5). The sensors generate ultrasonic pulses when triggered by the park assist module when an obstacle is detected. The sensors then signal the module when reflected ultrasonic pulses are received.

The sensors detect objects with an ultrasonic pulse that reflects off the object and then is sent to the module to determine the distance of the object.

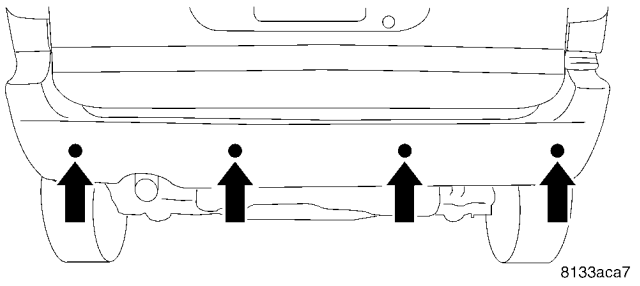

Fig. 5 PARK ASSIST SENSOR LOCATION

OPERATION

The Park Assist Sensors:

- Generate ultrasonic pulses when triggered by the Park Assist Module.
- Reception/filtering of ultrasonic energy received.
- Signalling the module of received ultrasonic pulses that meet threshold criteria.

The sensors are supplied power by the module. The sensor supply is enabled when the sensor function is necessary.

The sensors detection length from the rear of the vehicle is 0.3 meters to 1.5 meters. This area extends around the rear side of the vehicle. The sensor detection height from the ground is 0.2 meters to about 1.5 meters.

- Ensure that the rear bumper (sensors) is free of dirt and debris to keep the system operating properly.
- Jackhammers, large trucks, and other vibrations could affect the performance of the system.
- Ensure that the parking brake is not applied.

If “Service Park Assist System” appears in the EVIC after making sure the rear bumper is clean, proceed to diagnose the system using a scan tool and the appropriate diagnostic information.

REMOVAL

(1) Open hood.

(2) Disconnect and isolate the battery negative cable.

(3) Remove rear fascia (Refer to 13 - FRAME & BUMPERS/BUMPERS/REAR FASCIA - REMOVAL).

(4) Unsnap Park Assist Sensor from the retaining housing and remove from fascia.

INSTALLATION

(1) Position the Park Assist Sensor over the retaining housing and firmly snap into housing in rear fascia.

(2) Install the rear fascia (Refer to 13 - FRAME & BUMPERS/BUMPERS/REAR FASCIA - INSTALLATION).

(3) Connect the battery negative cable.

(4) Close hood.

(5) Verify vehicle and system operation.

ELECTRONIC CONTROL MODULES

TABLE OF CONTENTS

page

ELECTRONIC CONTROL MODULES
STANDARD PROCEDURE - PCM/SKIM PROGRAMMING 1
BODY CONTROL MODULE
DESCRIPTION 2
OPERATION 3
REMOVAL 4
INSTALLATION 4
CONTROLLER ANTILOCK BRAKE
DESCRIPTION 4
OPERATION 5
REMOVAL 5
INSTALLATION 6
DATA LINK CONNECTOR
DESCRIPTION 6
OPERATION 6
FRONT CONTROL MODULE
DESCRIPTION 7
OPERATION 7
DIAGNOSIS AND TESTING FRONT CONTROL MODULE 7
REMOVAL 7
INSTALLATION 7
HEATED SEAT MODULE
DESCRIPTION 8
OPERATION 8
DIAGNOSIS AND TESTING HEATED SEAT MODULE 9
REMOVAL 9
INSTALLATION 9
MEMORY SEAT/MIRROR MODULE
DESCRIPTION 9
OPERATION 9
DIAGNOSIS AND TESTING MEMORY SEAT/MIRROR MODULE 9
REMOVAL 10
INSTALLATION 10
POWER LIFTGATE CONTROL MODULE
DESCRIPTION 10

page

OPERATION 10
DIAGNOSIS AND TESTING POWER LIFTGATE CONTROL MODULE 10
REMOVAL 10
INSTALLATION 11
POWERTRAIN CONTROL MODULE
DESCRIPTION
DESCRIPTION 11
OPERATION - SENSOR RETURN - PCM INPUT 14
OPERATION - DATA BUS COMMUNICATION RECEIVE - PCM INPUT 14
OPERATION - IGNITION SENSE - PCM INPUT 14
OPERATION - PCM GROUND 14
OPERATION - 5 VOLT SUPPLY - PCM OUTPUT 15
STANDARD PROCEDURE
STANDARD PROCEDURE - OBTAINING DIAGNOSTIC TROUBLE CODES 15
STANDARD PROCEDURE - PINION FACTOR SETTING. 15
STANDARD PROCEDURE - QUICK LEARN PROCEDURE 15
REMOVAL
REMOVAL - SBEC CONTROLLER 16
REMOVAL - NGC CONTROLLER 16
INSTALLATION
INSTALLATION - SBEC CONTROLLER 17
INSTALLATION 17
SLIDING DOOR CONTROL MODULE
DESCRIPTION 18
OPERATION 18
DIAGNOSIS AND TESTING SLIDING DOOR CONTROL MODULE 18
REMOVAL 18
INSTALLATION 19

ELECTRONIC CONTROL MODULES

STANDARD PROCEDURE - PCM/SKIM PROGRAMMING

NOTE: Before replacing the PCM for a failed driver, control circuit or ground circuit, be sure to check the related component/circuit integrity for failures not detected due to a double fault in the circuit. Most PCM driver/control circuit failures are caused by internal component failures (i.e. relay and solenoids) and shorted circuits (i.e. pull-ups, drivers and switched circuits). These failures are difficult to detect when a double fault has occurred and only one DTC has set.

ELECTRONIC CONTROL MODULES (Continued)

When a PCM (SBEC) and the SKIM are replaced at the same time perform the following steps in order:

(1) Program the new PCM (SBEC)
(2) Program the new SKIM
(3) Replace all ignition keys and program them to the new SKIM.

PROGRAMMING THE PCM (SBEC)

The SKIS Secret Key is an ID code that is unique to each SKIM. This code is programmed and stored in the SKIM, PCM and transponder chip (ignition keys). When replacing the PCM it is necessary to program the secret key into the new PCM using the DRB III. Perform the following steps to program the secret key into the PCM.

(1) Turn the ignition switch on (transmission in park/neutral).
(2) Use the DRB III and select THEFT ALARM, SKIM then MISCELLANEOUS.
(3) Select PCM REPLACED (GAS ENGINE).
(4) Enter secured access mode by entering the vehicle four-digit PIN.
(5) Select ENTER to update PCM VIN.

NOTE: If three attempts are made to enter secure access mode using an incorrect PIN, secured access mode will be locked out for one hour. To exit this lockout mode, turn the ignition to the RUN position for one hour then enter the correct PIN. (Ensure all accessories are turned off. Also monitor the battery state and connect a battery charger if necessary).

(6) Press ENTER to transfer the secret key (the SKIM will send the secret key to the PCM).
(7) Press Page Back to get to the Select System menu and select ENGINE, MISCELLANEOUS, and SRI MEMORY CHECK.
(8) The DRB III will ask, Is odometer reading between XX and XX? Select the YES or NO button on the DRB III. If NO is selected, the DRB III will read, Enter odometer Reading<From I.P. odometer>. Enter the odometer reading from the Instrument Panel and press ENTER.

PROGRAMMING THE SKIM

(1) Turn the ignition switch on (transmission in park/neutral).
(2) Use the DRB III and select THEFT ALARM, SKIM then MISCELLANEOUS.
(3) Select PCM REPLACED (GAS ENGINE).
(4) Program the vehicle four-digit PIN into SKIM.
(5) Select COUNTRY CODE and enter the correct country.

NOTE: Be sure to enter the correct country code. If the incorrect country code is programmed into SKIM, the SKIM must be replaced.

(6) Select YES to update VIN (the SKIM will learn the VIN from the PCM).
(7) Press ENTER to transfer the secret key (the PCM will send the secret key to the SKIM).
(8) Program ignition keys to SKIM.

NOTE: If the PCM and the SKIM are replaced at the same time, all vehicle keys will need to be replaced and programmed to the new SKIM.

PROGRAMMING IGNITION KEYS TO THE SKIM

(1) Turn the ignition switch on (transmission in park/neutral).
(2) Use the DRB III and select THEFT ALARM, SKIM then MISCELLANEOUS.
(3) Select PROGRAM IGNITION KEY'S.
(4) Enter secured access mode by entering the vehicle four-digit PIN.

NOTE: A maximum of eight keys can be learned to each SKIM. Once a key is learned to a SKIM it (the key) cannot be transferred to another vehicle.

If ignition key programming is unsuccessful, the DRB III will display one of the following messages:

Programming Not Attempted - The DRB III attempts to read the programmed key status and there are no keys programmed into SKIM memory.

Programming Key Failed (Possible Used Key From Wrong Vehicle) - SKIM is unable to program key due to one of the following:

- faulty ignition key transponder
- ignition key is programmed to another vehicle.

8 Keys Already Learned, Programming Not Done - SKIM transponder ID memory is full.

(5) Obtain ignition keys to be programmed from customer (8 keys maximum).
(6) Using the DRB III, erase all ignition keys by selecting MISCELLANEOUS and ERASE ALL CURRENT IGN. KEYS.
(7) Program all ignition keys.

Learned Key In Ignition - Ignition key transponder ID is currently programmed in SKIM memory.

BODY CONTROL MODULE

DESCRIPTION

The Body Control Module (BCM) is located in the passenger compartment, attached to the bulkhead underneath the left side of the instrument panel.

BODY CONTROL MODULE (Continued)

The BCM utilizes integrated circuitry and information carried on the Programmable Communications Interface (PCI) data bus network along with many hard wired inputs to monitor many sensor and switch inputs throughout the vehicle. In response to those inputs, the internal circuitry and programming of the BCM allow it to control and integrate many electronic functions and features of the vehicle through both hard wired outputs and the transmission of electronic message outputs to other electronic modules in the vehicle over the PCI data bus.

OPERATION

The Body Control Module (BCM) supplies vehicle occupants with visual and audible information and controls various vehicle functions. To provide and receive information, the BCM is interfaced to the vehicle's serial bus communications network, referred to as the Programmable Communications Interface (PCI) bus.

This network consists of the;

- Powertrain Control Module (PCM)
- Transmission Control Module (TCM)
- Mechanical Instrument Cluster (MIC)
- Occupant Restraint Controller (ORC)
- Compass/Mini-Trip Computer (CMTC)
- Electronic Vehicle Information Center (EVIC)
- Controller Antilock Brake (CAB)
- HVAC Control Module
- Sliding Door Control Modules (driver and passenger side doors)
- Power Liftgate Module (PLG)
- Audio system equipped with RAZ, RBU, RBK, and RBB radios.
- Sentry Key Remote Entry Module (SKREEM).
- Side Impact Airbag Control Module (SIACM)
- Memory Seat Module (MSM)
- Sentry Key Immobilizer Module (SKIM)

The BCM is operational when battery power is supplied to the module.

The BCM provides the following features:

- Power Door Locks
- Automatic Door Locks
- Battery Protection - The BCM will automatically turn off all exterior lamps after 3 minutes, and all interior lamps after 15 minutes after the ignition is turned off, if they are not turned off by the driver.
- Chime Control
- Compass/Mini-Trip support.
- Interior Lighting (Courtesy/Reading Lamps)
- BCM Diagnostic Reporting
- Electronic Liftgate Release (with Power Door Locks)
- Exterior Lighting
- Headlamp Time Delay (with/without Automatic Headlamps)
- Illuminated Entry
- Fade to Off Interior Lamps - This feature dims the interior lighting (courtesy lamps) gradually if the BCM does not receive any new inputs that would cause the interior lamps to remain on.
- Pulse Width Modulated Instrument Panel Dimming
- Door Lock Inhibit - This feature disables the door lock functions if the key is in the ignition and either front door is ajar. Pressing the Remote Keyless Entry (RKE) lock/unlock button under these conditions result in normal lock/unlock activation.

The BCM has the ability to LEARN additional features in the vehicle, provided the appropriate switch input and PCI data bus messages are received. Refer to the LEARNED FEATURES table.

LEARNED FEATURES

FEATURE	LEARNING KEY
REAR WIPER CONTROL ON HVAC CONTROL ON INSTRUMENT PANEL	PCI BUS MESSAGE RECEIVED FROM HVAC CONTROL
AUTOMATIC HEADLAMPS	PCI MESSAGE FROM OVERHEAD OR HEADLAMP SWITCH POSITION (AUTO)
REMOTE KEYLESS ENTRY	SKREEM MESSAGE RECEIVED FROM MODULE
FRONT FOG LAMPS	HEADLAMP SWITCH POSITION (PARK W/FRONT FOG LAMPS)
POWER SLIDING DOOR	PCI IFR RECEIVED FROM MODULE
THE BCM HAS FOUR SWITCH INPUTS FOR THE POWER SLIDING DOOR FEATURE; LOCATED IN THE OVERHEAD CONSOLE ARE THE LEFT AND RIGHT SIDE SLIDING DOOR SWITCHES TO ACTIVATE EITHER OR BOTH SLIDING DOORS UNDER THE PROPER CONDITIONS. ALSO ARE B-PILLAR SWITCHES LOCATED ON THE LEFT AND RIGHT B-PILLAR POSTS.	
POWER LIFTGATE	PCI IFR RECEIVED FROM MODULE

BODY CONTROL MODULE (Continued)

FEATURE	LEARNING KEY
THE BCM HAS ONE LIFTGATE INPUT LOCATED IN THE OVERHEAD CONSOLE.	
POWER LOCKOUT SWITCH INPUT	
THE BCM HAS ONE LOCKOUT SWITCH INPUT THAT WHEN ENABLED WILL DISABLE THE B-PILLAR SLIDING DOOR SWITCHES FROM ACTIVATING EITHER SLIDING DOOR WHEN DEPRESSED.	
PCI AUDIO SYSTEM	PCI MESSAGE RECEIVED FROM MODULE
REMOTE RADIO CONTROLS	REMOTE RADIO SWITCHES PRESENT
VEHICLE THEFT SECURITY	SKREEM MESSAGE RECEIVED, VALID KEY RECEIVED, & DIAGNOSTIC PID RECEIVED.
MEMORY SEAT AND MIRRORS	MEMORY SEAT SWITCH PRESENT AND OR PCI MESSAGE RECEIVED FROM MEMORY MODULE
ABS W/TRACTION CONTROL	PCI MESSAGE RECEIVED FROM CAB
SENTRY KEY IMMOBILIZER SYSTEM	PCI MESSAGE RECEIVED FROM SKIM OR VTSS PRESENT
ADJUSTABLE PEDAL MODULE	PCI MESSAGE RECEIVED FROM ADJUSTABLE PEDAL MODULE (APM)

When replacing a BCM there are three modules available:

- Base
- Midline
- RG - Export

The Midline controller is used on vehicles that have Power Door Locks. If a vehicle is equipped with the Vehicle Theft Security System, the Midline controller becomes a Premium when the theft feature is enabled.

CAUTION: Do not swap Body Control Modules between vehicles or body controller's off the shelf.

The BCM has internal diagnostic capability that assists in diagnosing the system error. When an OPEN or a SHORT circuit exists, the diagnostic tool can be used to read the BCM faults. The faults are very descriptive in identifying the appropriate feature that has faulted.

The only two faults that the BCM logs that conclude the replacement of a BCM are faults;

- # 01 - Internal BCM failure (replace BCM)
- # 1F - J1850 Internal Hardware Failure (replace BCM)

Otherwise the appropriate diagnostic procedures for each of the features should be taken when the BCM logs a fault.

REMOVAL

(1) Disconnect and isolate the battery negative cable.

(2) Remove the lower instrument panel silencer.

(3) Remove the knee blocker and reinforcement (Refer to 23 - BODY/INSTRUMENT PANEL/KNEE BLOCKER REINFORCEMENT - REMOVAL).

(4) Disconnect the five wire connectors from the bottom of the Body Control Module (BCM).

(5) Move bulkhead wiring aside.

(6) Remove the screws holding the BCM to the bulkhead.

(7) Remove the BCM from the mounting bracket.

INSTALLATION

(1) Install the BCM to the mounting bracket.

(2) Install the screws holding the BCM to the bulkhead.

(3) Connect the five wire connectors to the bottom of the Body Control Module (BCM).

(4) Install the knee blocker and reinforcement (Refer to 23 - BODY/INSTRUMENT PANEL/KNEE BLOCKER REINFORCEMENT - INSTALLATION).

(5) Install the lower instrument panel silencer.

(6) Connect the battery negative cable.

(7) Verify proper operation of BCM and its functions.

CONTROLLER ANTILOCK BRAKE

DESCRIPTION

The controller antilock brake (CAB) is a microprocessor-based device which monitors the antilock brake system (ABS) during normal braking and controls it when the vehicle is in an ABS stop. The CAB is mounted to the HCU as part of the integrated control unit (ICU) (Fig. 1). The CAB uses a 24-way elec-

CONTROLLER ANTILOCK BRAKE (Continued)

trical connector on the vehicle wiring harness. The power source for the CAB is through the ignition switch in the RUN or ON position. The CAB is on the PCI bus.

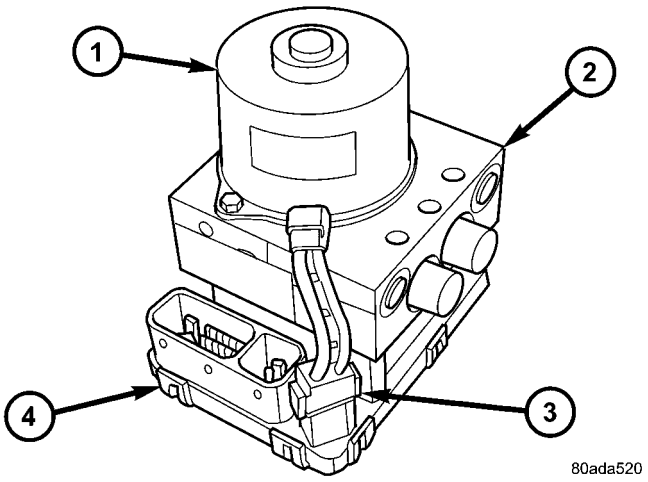

Fig. 1 Integrated Control Unit (ICU)

1 - PUMP/MOTOR
2 - HCU
3 - PUMP/MOTOR CONNECTOR
4 - CAB

OPERATION

The primary functions of the controller antilock brake (CAB) are to:

- Monitor the antilock brake system for proper operation.
- Detect wheel locking or wheel slipping tendencies by monitoring the speed of all four wheels of the vehicle.
- Control fluid modulation to the wheel brakes while the system is in an ABS mode.
- Store diagnostic information.
- Provide communication to the DRBIII® scan tool while in diagnostic mode.
- Illuminate the amber ABS warning indicator lamp.
- (With traction control only) Illuminate the TRAC ON lamp in the message center on the instrument panel when a traction control event occurs.
- (with traction control only) Illuminate the TRAC OFF lamp when the amber ABS warning indicator lamp illuminates.

The CAB constantly monitors the antilock brake system for proper operation. If the CAB detects a fault, it will turn on the amber ABS warning indicator lamp and disable the antilock braking system. The normal base braking system will remain operational.

NOTE: If the vehicle is equipped with traction control, the TRAC OFF lamp will illuminate anytime the amber ABS warning indicator lamp illuminates.

The CAB continuously monitors the speed of each wheel through the signals generated by the wheel speed sensors to determine if any wheel is beginning to lock. When a wheel locking tendency is detected, the CAB commands the CAB command coils to actuate. The coils then open and close the valves in the HCU that modulate brake fluid pressure in some or all of the hydraulic circuits. The CAB continues to control pressure in individual hydraulic circuits until a locking tendency is no longer present.

The CAB contains a self-diagnostic program that monitors the antilock brake system for system faults. When a fault is detected, the amber ABS warning indicator lamp is turned on and the fault diagnostic trouble code (DTC) is then stored in a diagnostic program memory. A latched fault will disable certain system functionality for the current ignition cycle. An unlatched fault will disable certain system functionality until the fault condition disappears. These DTC's will remain in the CAB memory even after the ignition has been turned off. The DTC's can be read and cleared from the CAB memory by a technician using the DRBIII® scan tool. If not cleared with a DRBIII® scan tool, the fault occurrence and DTC will be automatically cleared from the CAB memory after the identical fault has not been seen during the next 3,500 miles. Drive-off may be required for the amber ABS warning indicator lamp to go out on the next ignition cycle.

CAB INPUTS

- Wheel speed sensors (four)
- Brake lamp switch
- Ignition switch
- System and pump voltage
- Ground
- Traction control switch (if equipped)
- Diagnostic communication (PCI)

CAB OUTPUTS

- Amber ABS warning indicator lamp actuation (via BUS)
- Red BRAKE warning indicator lamp actuation (via BUS)
- Instrument cluster (MIC) communication (PCI)
- Traction control lamps (if equipped)
- Diagnostic communication (PCI, via BUS)

REMOVAL

(1) Disconnect the battery cables.

(2) Remove the battery (Refer to 8 - ELECTRICAL/BATTERY SYSTEM/BATTERY - REMOVAL).

(3) Disconnect the vacuum hose connector at the tank built into the battery tray.

(4) Remove the screw securing the coolant filler neck to the battery tray.

CONTROLLER ANTILOCK BRAKE (Continued)

(5) Remove the battery tray (Refer to 8 - ELECTRICAL/BATTERY SYSTEM/TRAY - REMOVAL).

(6) Pull up on the CAB connector lock and disconnect the 24–way electrical connector (Fig. 2).

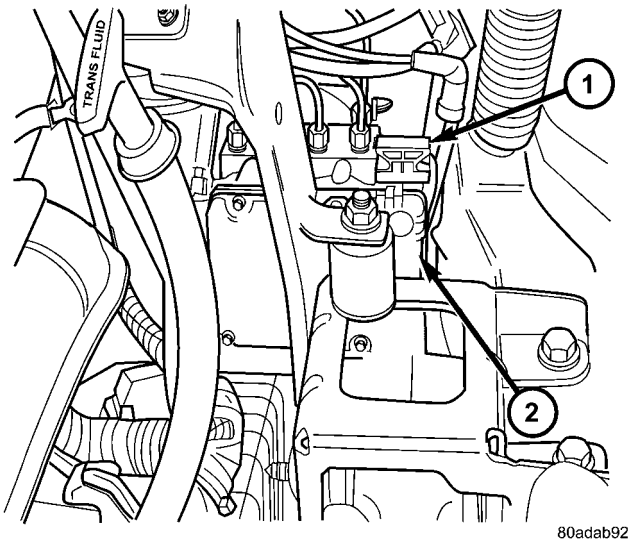

Fig. 2 CAB Connector Lock

1 - CONNECTOR LOCK
2 - CAB

(7) Disconnect the pump/motor connector from the CAB.

(8) Remove the screws securing the CAB to the HCU (Fig. 3)

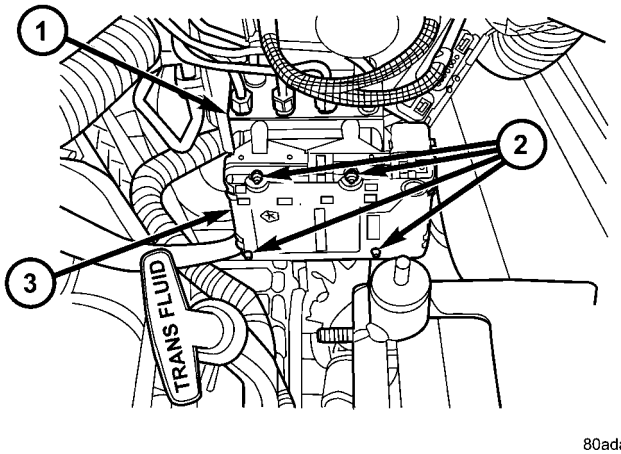

Fig. 3 CAB Mounting Screws

1 - HCU
2 - MOUNTING SCREWS
3 - CAB

(9) Pull CAB straight forward off HCU.

INSTALLATION

(1) Slide the CAB onto the HCU (Fig. 3).

(2) Install screws securing the CAB to the HCU (Fig. 3) Tighten the mounting screws to 2 N·m (17 in lbs).

(3) Reconnect the 24–way wiring connector and the pump/motor wiring connector. (Fig. 2)

(4) Install the battery tray (Refer to 8 - ELECTRICAL/BATTERY SYSTEM/TRAY - INSTALLATION).

(5) Install the screw securing the coolant filler neck to the battery tray.

(6) Reconnect the vacuum hose to the coolant tank built into the battery tray.

(7) Install the battery (Refer to 8 - ELECTRICAL/BATTERY SYSTEM/BATTERY - INSTALLATION).

(8) Reconnect the battery cables.

(9) Connect a DRBIII® to the vehicle. Check and clear any faults, and initialize the system.

DATA LINK CONNECTOR

DESCRIPTION

The data link connector is located inside the vehicle, below instrument panel next to the center column (Fig. 4).

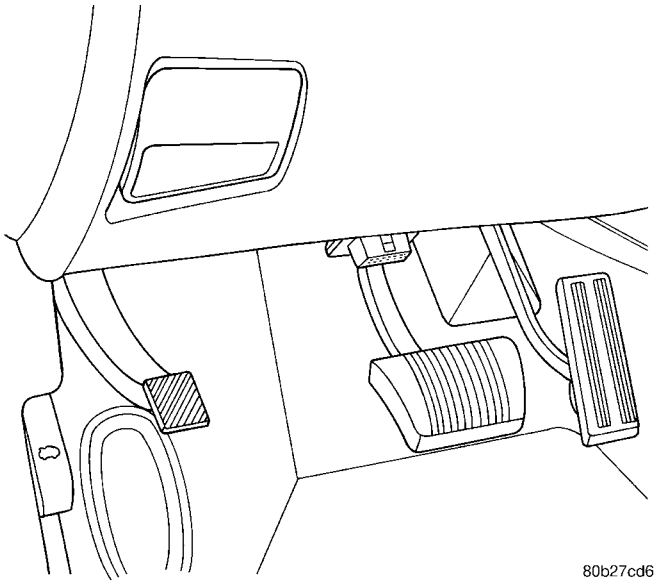

Fig. 4 DATA LINK CONNECTOR

OPERATION

The data link connector (diagnostic connector) links the DRB scan tool with the Powertrain Control Module (PCM). Refer to On-Board Diagnostics in the General Diagnosis section of this group.

FRONT CONTROL MODULE

DESCRIPTION

The Front Control Module (FCM) is a micro controller based module located in the engine compartment. The FCM mates to the Power Distribution Center (PDC) to form the Integrated Power Module (IPM). The IPM connects directly to the battery and provides the primary means of circuit protection and power distribution for all vehicle electrical systems. The FCM controls power to some of these vehicle systems electrical and electromechanical loads based on inputs received from hard wired switch inputs and data received on the Programmable Communications Interface (PCI) data bus.

For information on the IPM, (Refer to 8 - ELECTRICAL/POWER DISTRIBUTION/INTEGRATED POWER MODULE - DESCRIPTION)

OPERATION

As messages are sent over the Programmable Communications Interface (PCI) data bus, the Front Control Module (FCM) reads these messages and controls power to some of the vehicles electrical systems by completing the circuit to ground (low side driver) or completing the circuit to 12 volt power (high side driver).

The following functions are **controlled** by the Front Control Module:

- Accessory Relay Actuation
- Brake Transmission Shift Interlock Functions (BTSI - gas engine only)
- Diesel Cabin Heater (Diesel Engine Vehicles)
- Electronic Back Light (EBL) Rear Defogger
- Front and Rear Blower Motor Relay Actuation
- Front Fog Lamp Relay Actuation
- Washer Motor (front and rear)
- Front Windshield Wiper “HI” & “LO” Relay Actuation
- Front Windshield Wiper “ON” Relay Actuation
- Headlamp Power with Voltage Regulation
- Horn Relay Actuation
- Headlamp Washer Relay Actuation (IF EQUIPPED - EXPORT ONLY)
- Name Brand Speaker (NBS) Relay Actuation
- Park Lamp Relay Actuation

The following inputs are **Received/Monitored** by the Front Control Module:

- Ambient Temperature Sensing
- Back-Up switch
- Brake Fluid Level
- B+ Connection Detection
- Engine Crank Signal (Diesel Engine Vehicles)
- Horn Input
- Ignition Switch Start Only
- Ignition Switch Run and Start Only
- Stop Lamp Sense
- Washer Fluid Level
- Windshield Wiper Park

DIAGNOSIS AND TESTING

FRONT CONTROL MODULE

The Front Control Module (FCM) is a printed circuit board based module with a on-board micro-processor. The FCM interfaces with other electronic modules in the vehicle via the Programmable Communications Interface (PCI) data bus. In order to obtain conclusive testing the PCI data bus and all of the electronic modules that provide inputs to, or receive outputs from the FCM must be checked. All PCI communication faults must be resolved prior to further diagnosing any front control module related issues.

The FCM was designed to be diagnosed with an appropriate diagnostic scan tool, such as the DRB III®. The most reliable, efficient, and accurate means to diagnose the front control module requires the use of a DRB III® scan tool and the proper Body Diagnostic Procedures manual.

Before any testing of the FCM is attempted, the battery should be fully charged and all wire harness and ground connections inspected around the affected areas on the vehicle.

REMOVAL

(1) Disconnect and isolate the negative and positive battery cables from the battery.

(2) Remove the battery (Refer to 8 - ELECTRICAL/BATTERY SYSTEM/BATTERY - REMOVAL).

(3) Using a long flat-bladed screwdriver, gently twist the Integrated Power Module (IPM) retaining clip outboard to free the IPM from its mounting bracket (Fig. 5). Rotate IPM upward to access the Front Control Module (FCM) retaining screws.

(4) Remove the front control module retaining screws.

(5) Pull the FCM straight from the IPM assembly to disconnect the electrical connector (Fig. 6) and remove the FCM from the vehicle.

INSTALLATION

NOTE: Front Control Module must be programmed to the correct radio EQ curve using the DRB III®. This will ensure that the audio system is operating correctly.

(1) Install the Front Control Module (FCM) in the Integrated Power Module (IPM) assembly by pushing the 49-way electrical connector straight in.

FRONT CONTROL MODULE (Continued)

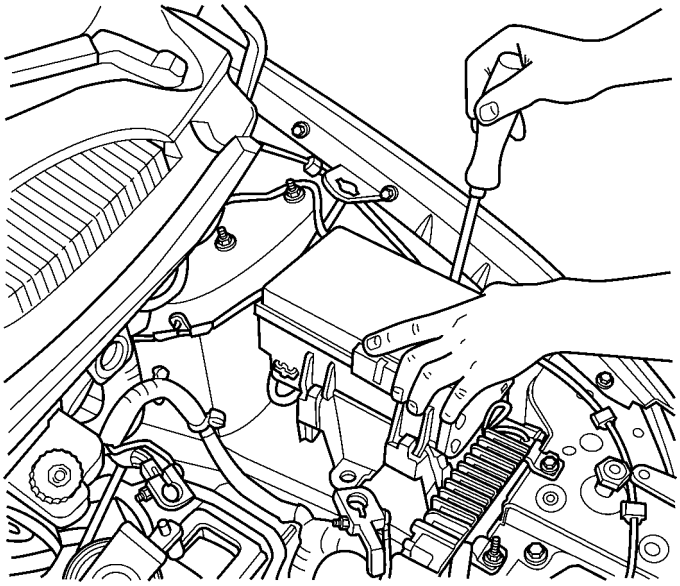

Fig. 5 REMOVING INTEGRATED POWER MODULE

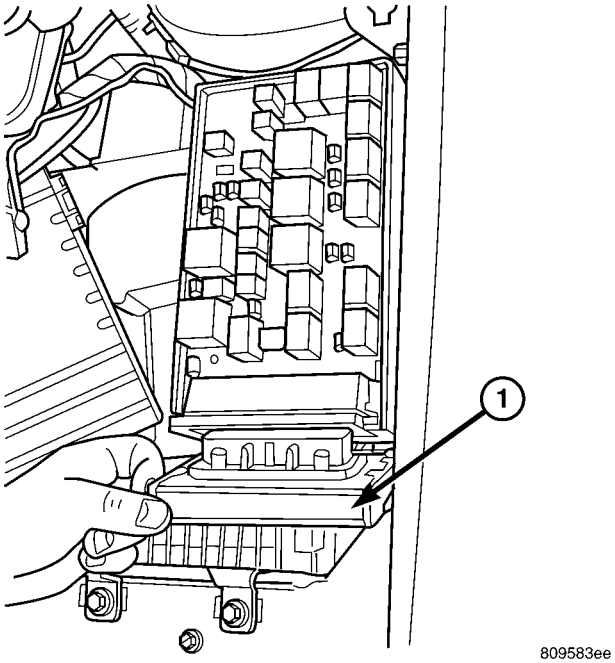

Fig. 6 FRONT CONTROL MODULE

1 - FRONT CONTROL MODULE

(2) Install the FCM retaining screws. Torque the screws to 1 N·m (7 in. lbs).

(3) Rotate the IPM assembly downward to secure in mounting bracket.

(4) Install the battery in the vehicle. Refer to the procedure in Battery Systems.

(5) Connect the positive and negative battery cables.

(6) Using the DRB III ®, under "FRONT CONTROL MODULE" then "MISC" program the EQ curve of the radio into the Front Control Module. Refer to the appropriate diagnostic manual.

NOTE: If the vehicle is not equipped with Name Brand Speakers (Infinity, etc.) or Headlamp Washers the DRB III® must be used to Disable the appropriate relays in the Integrated Power Module Assembly.

HEATED SEAT MODULE

DESCRIPTION

Vehicles equipped with heated seats utilize two heated seat modules. The heated seat modules are located under the front seats, where they are secured to the seat cushion pans. Each heated seat module has three connector receptacles that allow the modules to be connected to all of the required inputs and outputs through the seat wire harness.

The heated seat modules are an electronic microprocessor controlled device designed and programmed to use inputs from the ignition switch, heated seat switch and the heated seat sensor to operate and control the heated seat elements in the front seat.

OPERATION

The heated seat module operates on fused battery current received from the Integrated Power Module (IPM). The module is grounded at all times through the seat wire harness. Inputs to the module include a resistor multiplexed heated seat switch request circuit for the heated seat switch and the heated seat sensor inputs from the seat cushions of each front seat. In response to those inputs the heated seat module controls battery current feeds to the heated seat elements.

When a heated seat switch request signal is received by the heated seat module and the enable input is high, the heated seat module energizes the selected heated seat sensor circuit and the sensor provides the module with an input indicating the surface temperature of the selected seat cushion.

The Low heat set point is approximately 35° C (95° F), and the High heat set point is approximately 40° C (104° F). If the seat cushion surface temperature input is below the temperature set point for the selected temperature setting, the heated seat module energizes an N-channel Field Effect Transistor (N-FET) within the module which energizes the heated seat elements in the selected seat cushion and back. When the sensor input to the module indicates the correct temperature set point has been achieved, the module de-energizes the N-FET which de-ener-

gizes the heated seat elements. The heated seat module will continue to cycle the N-FET as needed to maintain the selected temperature set point.

DIAGNOSIS AND TESTING

HEATED SEAT MODULE

If a heated seat heats but one or both indicator lamps on the heated seat switch fail to operate, test the heated seat switch. (Refer to 8 - ELECTRICAL/HEATED SEATS/DRIVER HEATED SEAT SWITCH - DIAGNOSIS AND TESTING). If the heated seat switch checks OK, proceed as follows.

(1) Check the heated seat element (Refer to 8 - ELECTRICAL/HEATED SEATS/HEATED SEAT ELEMENT - DIAGNOSIS AND TESTING).

(2) Check the heated seat sensor (Refer to 8 - ELECTRICAL/HEATED SEATS/HEATED SEAT SENSOR - DIAGNOSIS AND TESTING).

(3) Using a voltmeter, back probe the appropriate heated seat module connector, do not disconnect. Check for battery voltage at the appropriate pin cavities. If OK go to Step 4. If not OK, repair the open or shorted voltage supply circuit as required.

(4) Using a ohmmeter, back probe the appropriate heated seat module connector, do not disconnect. Check for proper continuity to ground on the ground pin cavities. Continuity should be present. If OK replace the heated seat module. If Not OK, repair the open or shorted ground circuit as required.

REMOVAL

(1) Disconnect and isolate the negative battery cable.

(2) Remove the appropriate front seat from the vehicle (Refer to 23 - BODY/SEATS/SEAT - REMOVAL).

(3) Unsnap the module from the seat cushion pan.

(4) Disconnect the module wire harness connectors.

INSTALLATION

(1) Connect the module wire harness connectors.

(2) Snap the module on the seat cushion pan.

(3) Install the appropriate front seat in the vehicle (Refer to 23 - BODY/SEATS/SEAT - INSTALLATION).

(4) Connect and isolate the negative battery cable.

MEMORY SEAT/MIRROR MODULE

DESCRIPTION

Vehicles equipped with the memory seat/mirror option, utilize a memory module located under the drivers front seat. This module is basically wired in-line between the power seat switch and the power seat track/adjuster motors, or in-line between the power mirror switch and the power side view mirror(s) motor(s). The Memory Seat/Mirror Module (MSMM) contains a central processing unit that communicates with other modules on the Programmable Communications Interface (PCI) data bus network.

The MSMM receives hard wired inputs from the driver power seat switch and the potentiometers on each of the driver side power seat track motors, or from the power mirror switch and the potentiometers on the side view mirror. The MSMM receives messages over the PCI data bus from the Body Control Module (BCM) (memory switch status), the Powertrain Control Module (PCM) (vehicle speed status). The MSMM will prevent the seat memory recall function from being initiated if the driver side seat belt is buckled, if the transmission gear selector lever is not in the Park or Neutral positions, or if the vehicle is moving.

For diagnosis of the MSMM or the PCI data bus, a DRB III® scan tool and the proper Diagnostic Procedures Information are recommended. The MSMM cannot be repaired and, if faulty or damaged, it must be replaced.

OPERATION

When memory system operation is requested (depressing of the memory switch), a resistor multiplexed signal is sent from the memory switch to the Body Control Module (BCM). The BCM will then send the appropriate signals out to the Memory Seat/Mirror Module (MSMM), the MSMM then applies the voltage supply to the power seat track or side-view mirror if the proper requirements are met. The vehicle speed must equal zero and the transmission must be in park or neutral in order for the memory system to function.

DIAGNOSIS AND TESTING

MEMORY SEAT/MIRROR MODULE

Any diagnosis of the Memory Seat/Mirror system should begin with the use of the DRB III® diagnostic tool. For information on the use of the DRB III®, refer to the appropriate Diagnostic Procedures information.

MEMORY SEAT/MIRROR MODULE (Continued)

Inspect the related wiring harness connectors for broken, bent, pushed out, or corroded terminals. Refer to the appropriate wiring information.

REMOVAL

(1) Disconnect and isolate the battery negative cable.

(2) Remove the driver side front bucket seat retaining nuts from under the vehicle (Refer to 23 - BODY/SEATS/SEAT - REMOVAL).

(3) Lift the drivers seat up and out of the mounting holes in the floor pan and lay the seat rearward to access the module located under the seat.

(4) Disconnect the memory seat/mirror module electrical connectors. Depress the retaining tab and pull straight apart.

(5) Remove the module retaining bolts and remove the module from the bracket.

INSTALLATION

(1) Position and install the module retaining bolts.

(2) Connect the memory seat/mirror module electrical connectors.

(3) Position the drivers seat in the mounting holes in the floor pan.

(4) Install the driver side front bucket seat retaining nuts from under the vehicle (Refer to 23 - BODY/SEATS/SEAT - INSTALLATION).

(5) Connect the battery negative cable.

POWER LIFTGATE CONTROL MODULE

DESCRIPTION

Vehicles equipped with a power liftgate (PLG) utilize a PLG control module. This module is located on the vehicles left side D-pillar just below the motor assembly (Fig. 7) and contains a microprocessor, which is used to communicate to the vehicles body control module. The PLG control module receives and monitors logic inputs from all the PLG system switches except for the outside handle switch. This module also contains the software technology to detect liftgate obstructions and stop and/or reverse the door accordingly.

OPERATION

The power liftgate control module contains the electronic circuitry and software used to control the sequence of events for the power liftgate system. This module communicates on the Programmable Communications Interface (PCI) bus circuit with the vehicles Body Control Module (BCM) to monitor many different inputs and outputs such as door lock status, transmission gear selector position and vehicle speed.

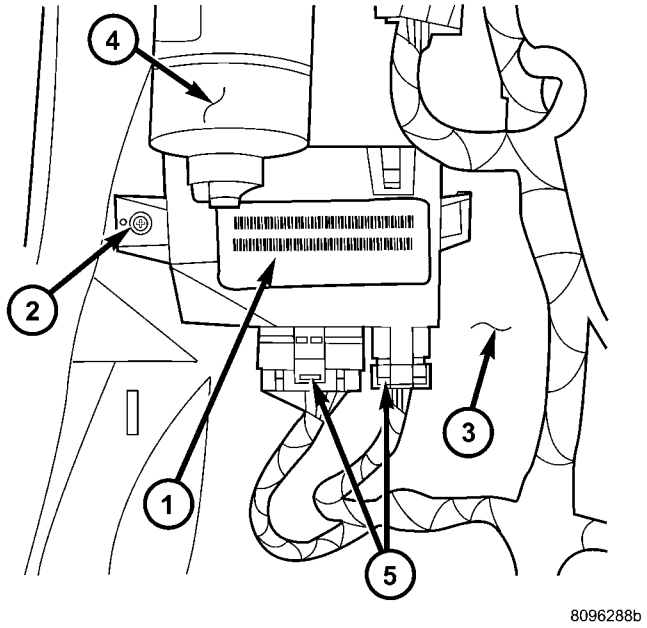

Fig. 7 POWER LIFTGATE CONTROL MODULE

1 - POWER LIFTGATE CONTROL MODULE
2 - RETAINING SCREWS
3 - D-PILLAR
4 - POWER LIFTGATE MOTOR
5 - ELECTRICAL CONNECTORS

(Refer to 8 - ELECTRICAL/POWER DOORS - OPERATION) for more information.

DIAGNOSIS AND TESTING

POWER LIFTGATE CONTROL MODULE

Any diagnosis of the Power Liftgate system should begin with the use of the DRB III® diagnostic tool. For information on the use of the DRB III®, refer to the appropriate Diagnostic Procedures information.

Inspect the related wiring harness connectors for broken, bent, pushed out, or corroded terminals. Refer to the appropriate wiring information.

REMOVAL

(1) Disconnect and isolate the battery negative cable.

(2) Remove the left D-pillar trim panel from the vehicle. (Refer to 23 - BODY/INTERIOR/LEFT D-PILLAR TRIM PANEL - REMOVAL)

(3) Disconnect the wire harness connections from the power liftgate motor assembly.

(4) Remove the screw holding the power liftgate control module to the D-pillar (Fig. 8).

(5) Remove the power liftgate control module from the vehicle.

POWER LIFTGATE CONTROL MODULE (Continued)

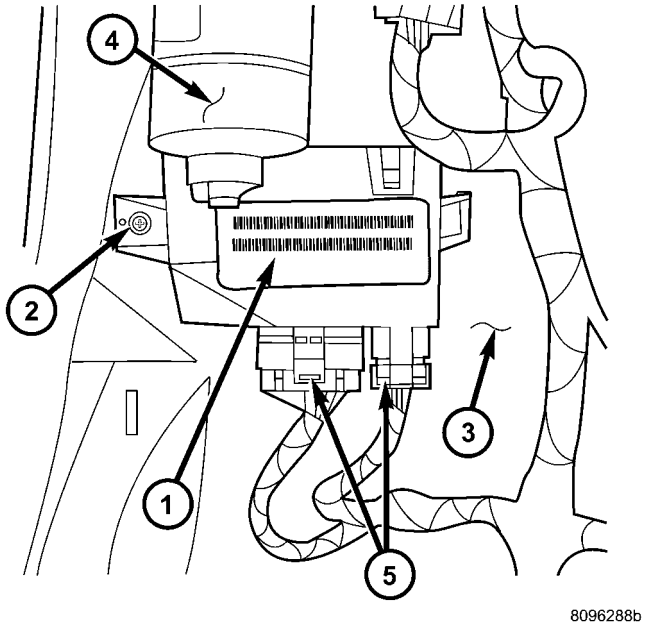

Fig. 8 POWER LIFTGATE CONTROL MODULE

1 - POWER LIFTGATE CONTROL MODULE
2 - RETAINING SCREWS
3 - D-PILLAR
4 - POWER LIFTGATE MOTOR
5 - ELECTRICAL CONNECTORS

INSTALLATION

(1) Install the Power Liftgate (PLG) control module on the D-pillar and install retaining screw.

(2) Connect the wire harness connections to the PLG control module. Be certain to slide connector locks to the locked position.

(3) Install the D-pillar trim panel on the vehicle. (Refer to 23 - BODY/INTERIOR/LEFT D-PILLAR TRIM PANEL - INSTALLATION)

(4) Connect the battery negative cable.

(5) Using an appropriate scan tool, check and erase any PLG control module diagnostic trouble codes.

(6) Verify PLG system operation. Cycle the PLG through one complete open and close cycle, this will allow the PLG control module to relearn its cycle with the new components.

POWERTRAIN CONTROL MODULE

DESCRIPTION

DESCRIPTION

The Powertrain Control Module (PCM) is a digital computer containing a microprocessor (Fig. 9). The PCM receives input signals from various switches and sensors referred to as Powertrain Control Module Inputs. Based on these inputs, the PCM adjusts various engine and vehicle operations through devices referred to as Powertrain Control Module Outputs.

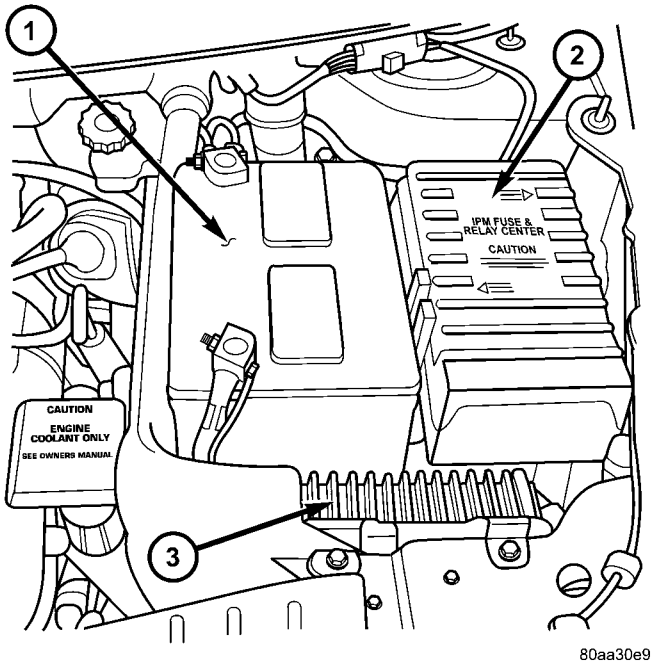

Fig. 9 Powertrain Control Module (PCM)

1 - Battery
2 - Power Distribution Center
3 - Powertrain Control Module

NOTE: PCM Inputs:

- Air Conditioning Pressure Transducer
- Ambient temperature Sensor
- ASD Relay
- Battery Temperature Sensor (NGC)
- Battery Voltage
- Brake Switch
- Camshaft Position Sensor
- Crankshaft Position Sensor
- Distance Sensor (from transmission control module)
- EGR Position Feedback
- Engine Coolant Temperature Sensor
- Heated Oxygen Sensors
- Ignition sense
- Intake Air Temperature Sensor
- Knock Sensor
- Leak Detection Pump Feedback
- Manifold Absolute Pressure (MAP) Sensor
- Park/Neutral
- PCI Bus
- Power Steering Pressure Switch
- Proportional Purge Sense

POWERTRAIN CONTROL MODULE (Continued)

- SCI Receive
- Speed Control
- Throttle Position Sensor
- Transmission Control Relay (Switched B+)
- Transmission Pressure Switches
- Transmission Temperature Sensor
- Transmission Input Shaft Speed Sensor
- Transmission Output Shaft Speed Sensor
- Transaxle Gear Engagement
- Vehicle Speed

NOTE: PCM Outputs:

- Air Conditioning Clutch Relay
- Automatic Shut Down (ASD) and Fuel Pump Relays
- Data Link Connector (PCI and SCI Transmit)
- Double Start Override
- EGR Solenoid
- Fuel Injectors
- Generator Field
- High Speed Fan Relay
- Idle Air Control Motor
- Ignition Coils
- Leak Detection Pump
- Low Speed Fan Relay
- MTV Actuator
- Proportional Purge Solenoid
- SRV Valve
- Speed Control Relay
- Speed Control Vent Relay
- Speed Control Vacuum Relay
- 8 Volt Output
- 5 Volt Output
- Torque Reduction Request
- Transmission Control Relay
- Transmission Solenoids
- Vehicle Speed

Based on inputs it receives, the powertrain control module (PCM) adjusts fuel injector pulse width, idle speed, ignition timing, and canister purge operation. The PCM regulates the cooling fans, air conditioning and speed control systems. The PCM changes generator charge rate by adjusting the generator field.

The PCM adjusts injector pulse width (air-fuel ratio) based on the following inputs.

- Battery Voltage
- Intake Air Temperature Sensor
- Engine Coolant Temperature
- Engine Speed (crankshaft position sensor)
- Exhaust Gas Oxygen Content (heated oxygen sensors)
- Manifold Absolute Pressure
- Throttle Position

The PCM adjusts engine idle speed through the idle air control motor based on the following inputs.

- Brake Switch
- Engine Coolant Temperature
- Engine Speed (crankshaft position sensor)
- Park/Neutral
- Transaxle Gear Engagement
- Throttle Position
- Vehicle Speed

The PCM adjusts ignition timing based on the following inputs.

- Intake Air Temperature
- Engine Coolant Temperature
- Engine Speed (crankshaft position sensor)
- Knock Sensor
- Manifold Absolute Pressure
- Park/Neutral
- Transaxle Gear Engagement
- Throttle Position

The automatic shut down (ASD) and fuel pump relays are mounted externally, but turned on and off by the powertrain control module through the same circuit.

The camshaft and crankshaft signals are sent to the powertrain control module. If the PCM does not receive both signals within approximately one second of engine cranking, it deactivates the ASD and fuel pump relays. When these relays are deactivated, power is shut off to the fuel injectors, ignition coils, fuel pump and the heating element in each oxygen sensor.

The PCM contains a voltage converter that changes battery voltage to a regulated 8.0 volts. The 8.0 volts power the camshaft position sensor, crankshaft position sensor and vehicle speed sensor. The PCM also provides a 5.0 volts supply for the engine coolant temperature sensor, intake air temperature sensor, manifold absolute pressure sensor and throttle position sensor.

The PCM engine control strategy prevents reduced idle speeds until after the engine operates for 320 km (200 miles). If the PCM is replaced after 320 km (200 miles) of usage, update the mileage in new PCM. Use the DRBIII® scan tool to change the mileage in the PCM. Refer to the appropriate Powertrain Diagnostic Manual and the DRBIII® scan tool.

TRANSMISSION CONTROL

CLUTCH VOLUME INDEX (CVI)

An important function of the PCM is to monitor Clutch Volume Index (CVI). CVIs represent the volume of fluid needed to compress a clutch pack.

The PCM monitors gear ratio changes by monitoring the Input and Output Speed Sensors. The Input, or Turbine Speed Sensor sends an electrical signal to the PCM that represents input shaft rpm. The Output Speed Sensor provides the PCM with output shaft speed information.

POWERTRAIN CONTROL MODULE (Continued)

By comparing the two inputs, the PCM can determine transaxle gear ratio. This is important to the CVI calculation because the PCM determines CVIs by monitoring how long it takes for a gear change to occur (Fig. 10).

Gear ratios can be determined by using the DRB Scan Tool and reading the Input/Output Speed Sensor values in the “Monitors” display. Gear ratio can be obtained by dividing the Input Speed Sensor value by the Output Speed Sensor value.

For example, if the input shaft is rotating at 1000 rpm and the output shaft is rotating at 500 rpm, then the PCM can determine that the gear ratio is 2:1. In direct drive (3rd gear), the gear ratio changes to 1:1. The gear ratio changes as clutches are applied and released. By monitoring the length of time it takes for the gear ratio to change following a shift request, the PCM can determine the volume of fluid used to apply or release a friction element.

The volume of transmission fluid needed to apply the friction elements are continuously updated for adaptive controls. As friction material wears, the volume of fluid need to apply the element increases.

Certain mechanical problems within the clutch assemblies (broken return springs, out of position snap rings, excessive clutch pack clearance, improper assembly, etc.) can cause inadequate or out-of-range clutch volumes. Also, defective Input/Output Speed Sensors and wiring can cause these conditions. The following chart identifies the appropriate clutch volumes and when they are monitored/updated:

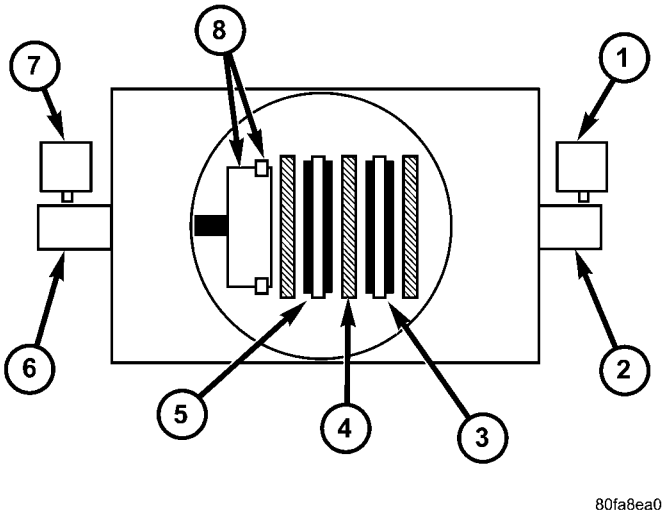

Fig. 10 Example of CVI Calculation

1 - OUTPUT SPEED SENSOR
2 - OUTPUT SHAFT
3 - CLUTCH PACK
4 - SEPARATOR PLATE
5 - FRICTION DISCS
6 - INPUT SHAFT
7 - INPUT SPEED SENSOR
8 - PISTON AND SEAL

CLUTCH VOLUMES				
Clutch	When Updated			Proper Clutch Volume
	Shift Sequence	Oil Temperature	Throttle Angle	
L/R	2-1 or 3-1 coast downshift	> 70°	< 5°	35 to 83
2/4	1-2 shift	> 110°	5 - 54°	20 to 77
OD	2-3 shift			48 to 150
UD	4-3 or 4-2 shift		> 5°	24 to 70

SHIFT SCHEDULES

As mentioned earlier, the PCM has programming that allows it to select a variety of shift schedules. Shift schedule selection is dependent on the following:

- Shift lever position
- Throttle position
- Engine load
- Fluid temperature
- Software level

As driving conditions change, the PCM appropriately adjusts the shift schedule. Refer to the following chart to determine the appropriate operation expected, depending on driving conditions.

POWERTRAIN CONTROL MODULE (Continued)

Schedule	Condition	Expected Operation
Extreme Cold	Oil temperature at start-up below -16° F	Park, Reverse, Neutral and 2nd gear only (prevents shifting which may fail a clutch with frequent shifts)
Cold	Oil temperature at start-up above -12° F and below 36° F	– Delayed 2-3 upshift (approximately 22-31 mph) – Delayed 3-4 upshift (45-53 mph) – Early 4-3 costdown shift (approximately 30 mph) – Early 3-2 coastdown shift (approximately 17 mph) – High speed 4-2, 3-2, 2-1 kickdown shifts are prevented – No EMCC
Warm	Oil temperature at start-up above 36° F and below 80 degree F	– Normal operation (upshift, kickdowns, and coastdowns) – No EMCC
Hot	Oil temperature at start-up above 80° F	– Normal operation (upshift, kickdowns, and coastdowns) – Full EMCC, no PEMCC except to engage FEMCC (except at closed throttle at speeds above 70-83 mph)
Overheat	Oil temperature above 240° F or engine coolant temperature above 244° F	– Delayed 2-3 upshift (25-32 mph) – Delayed 3-4 upshift (41-48 mph) – 3rd gear FEMCC from 30-48 mph – 3rd gear PEMCC from 27-31 mph
Super Overheat	Oil temperature above 260° F	– All ″Overheat″ shift schedule features apply – 2nd gear PEMCC above 22 mph – Above 22 mph the torque converter will not unlock unless the throttle is closed or if a wide open throttle 2nd PEMCC to 1 kickdown is made

OPERATION - SENSOR RETURN - PCM INPUT

The sensor return circuit provides a low electrical noise ground reference for all of the systems sensors. The sensor return circuit connects to internal ground circuits within the Powertrain Control Module (PCM).

OPERATION - DATA BUS COMMUNICATION RECEIVE - PCM INPUT

The PCM uses the SCI communication bus to preform engine diagnostics and flash operations. The transmission side of the PCM uses the SCI communication bus to flash new software. However, diagnostics is performed via the vehicles J1850 bus for the transmission side of the PCM.

OPERATION - IGNITION SENSE - PCM INPUT

The ignition sense input informs the Powertrain Control Module (PCM) that the ignition switch is in the crank or run position.

OPERATION - PCM GROUND

Ground is provided through multiple pins of the PCM connector. Depending on the vehicle there may be as many as two different ground pins. There are power grounds and sensor grounds.

POWERTRAIN CONTROL MODULE (Continued)

The power grounds are used to control the ground side relays, solenoids, ignition coil or injectors. The signal ground is used for any input that uses sensor return for ground, and the ground side of any internal processing component.

The PCM case is shielded to prevent RFI and EMI. The PCM case is grounded and must be firmly attached to a good, clean body ground.

Internally all grounds are connected together, however there is noise suppression on the sensor ground. For EMI and RFI protection the housing and cover are also grounded separately from the ground pins.

OPERATION - 5 VOLT SUPPLY - PCM OUTPUT

The PCM supplies 5 volts to the following sensors:

- A/C pressure transducer
- Ambient Temperature sensor
- Battery temperature
- Camshaft Position Sensor (NGC)
- Crankshaft Position Sensor (NGC)
- Engine coolant temperature sensor
- Inlet Air Temperature Sensor
- Knock sensor
- Linear EGR solenoid (if equipped)
- Manifold absolute pressure sensor
- Oil Pressure Switch
- Throttle position sensor

STANDARD PROCEDURE

STANDARD PROCEDURE - OBTAINING DIAGNOSTIC TROUBLE CODES

BULB CHECK

Key on: Bulb illuminated until vehicle starts, as long as all once per trip (readiness) monitors completed. If monitors have **not** been completed, then: Key on: bulb check for about 5 to 8 seconds, lamp then flashes if once per trip (readiness) monitors have **not** been completed until vehicle is started, then MIL is extinguished.

OBTAINING DTC'S USING DRB SCAN TOOL

(1) Connect the DRB scan tool to the data link (diagnostic) connector. This connector is located in the passenger compartment; at the lower edge of instrument panel; near the steering column.

(2) Turn the ignition switch on and access the "Read Fault" screen.

(3) Record all the DTC's and "freeze frame" information shown on the DRB scan tool.

(4) To erase DTC's, use the "Erase Trouble Code" data screen on the DRB scan tool. **Do not erase any DTC's until problems have been investigated and repairs have been performed.**

STANDARD PROCEDURE - PINION FACTOR SETTING

NOTE: This procedure must be performed if the PCM has been replaced with a NEW or replacement unit. Failure to perform this procedure will result in an inoperative or improperly calibrated speedometer.

The vehicle speed readings for the speedometer are taken from the output speed sensor. The PCM must be calibrated to the different combinations of equipment (final drive and tires) available. Pinion Factor allows the technician to set the Powertrain Control Module initial setting so that the speedometer readings will be correct. To properly read and/or reset the Pinion Factor, it is necessary to use a DRBIII® scan tool.

(1) Plug the DRBIII® scan tool into the diagnostic connector located under the instrument panel.

(2) Select the Transmission menu.

(3) Select the Miscellaneous menu.

(4) Select Pinion Factor. Then follow the instructions on the DRBIII® scan tool screen.

STANDARD PROCEDURE - QUICK LEARN PROCEDURE

The quick learn procedure requires the use of the DRBIII® scan tool. This program allows the PCM to recalibrate itself. This will provide the best possible transaxle operation.

NOTE: The quick learn procedure should be performed if any of the following procedures are performed:

- Transaxle Assembly Replacement
- Powertrain Control Module Replacement
- Solenoid/Pressure Switch Assembly Replacement
- Clutch Plate and/or Seal Replacement
- Valve Body Replacement or Recondition

To perform the Quick Learn Procedure, the following conditions must be met:

- The brakes must be applied
- The engine speed must be above 500 rpm
- The throttle angle (TPS) must be less than 3 degrees
- The shift lever position must stay until prompted to shift to overdrive
- The shift lever position must stay in overdrive after the Shift to Overdrive prompt until the DRBIII® indicates the procedure is complete
- The calculated oil temperature must be above 60° and below 200°

POWERTRAIN CONTROL MODULE (Continued)

(1) Plug the DRBIII® scan tool into the diagnostic connector. The connector is located under the instrument panel.
(2) Go to the Transmission screen.
(3) Go to the Miscellaneous screen.
(4) Select Quick Learn Procedure. Follow the instructions of the DRBIII® to perform the Quick Learn Procedure.

REMOVAL

REMOVAL - SBEC CONTROLLER

(1) Disconnect the negative battery cable.
(2) Remove the battery shield, refer to the Battery section for more information.
(3) Remove the 2 upper PCM bracket bolts (Fig. 11).

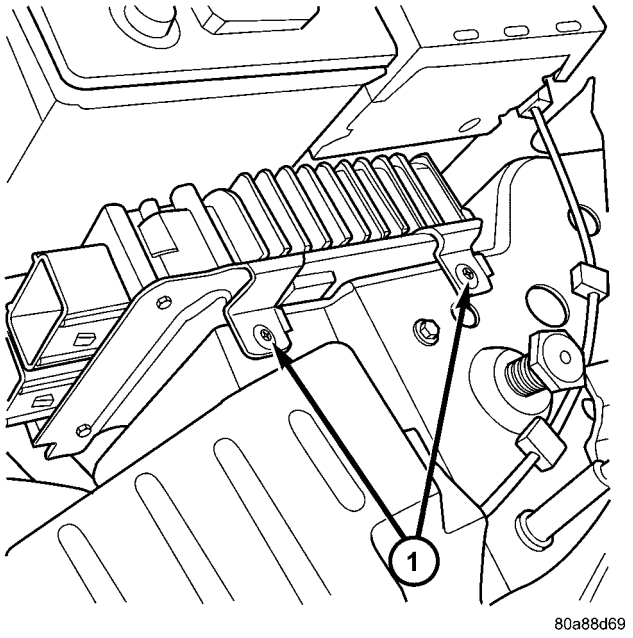

Fig. 11 PCM

1 - Attaching Bolts

(4) Remove the 2 PCM connectors.
(5) Remove the headlamp, refer to the Lamps section for more information.
(6) Remove the lower PCM mounting bolt (Fig. 12).
(7) Remove PCM.

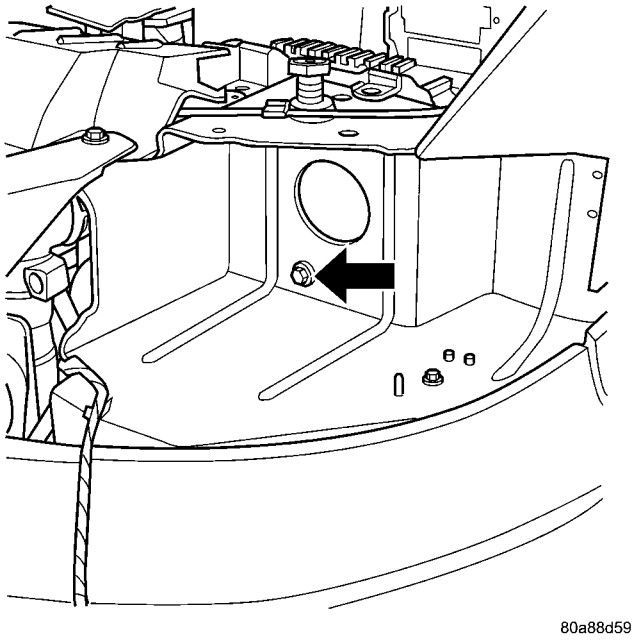

Fig. 12 PCM LOWER BOLT

REMOVAL - NGC CONTROLLER

The PCM engine control strategy prevents reduced idle speeds until after the engine operates for 320 km (200 miles). If the PCM is replaced after 320 km (200 miles) of usage, update the mileage and vehicle identification number (VIN) in the new PCM. Use the DRBIII® scan tool to change the millage and VIN in the PCM. If this step is not done a Diagnostic Trouble Code (DTC) may be set. Refer to the appropriate Powertrain Diagnostic Manual and the DRBIII® scan tool.

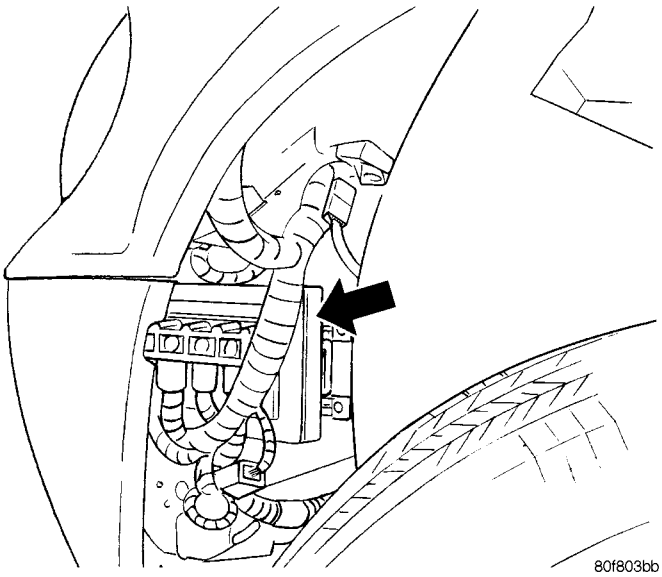

NGC CONTROLLER LOCATION

POWERTRAIN CONTROL MODULE (Continued)

(1) Turn wheels to the left.
(2) Disconnect the negative battery cable.
(3) Raise vehicle and support.
(4) Remove the left front wheel well splash shield (Fig. 13).

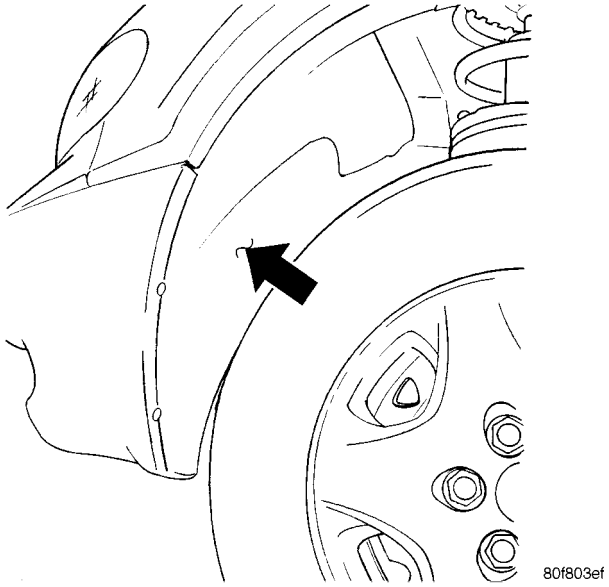

Fig. 13 SPLASH SHIELD

(5) Unlock and disconnect the electrical connectors (Fig. 14).



Fig. 14 NGC CONTROLLER

(6) Remove 3 screws from PCM to mounting bracket.
(7) Remove the PCM.

INSTALLATION

INSTALLATION - SBEC CONTROLLER

(1) Install the PCM.
(2) Install the lower PCM mounting bolt. Tighten bolt.
(3) Install the 2 upper PCM bracket bolts. Tighten bolt.
(4) Install the headlamp, refer to the Lamps section for more information.
(5) Install the 2 PCM connectors.
(6) Install the battery shield, refer to the Battery section for more information.
(7) Connect the negative battery cable.

INSTALLATION

The PCM engine control strategy prevents reduced idle speeds until after the engine operates for 320 km (200 miles). If the PCM is replaced after 320 km (200 miles) of usage, update the mileage and vehicle identification number (VIN) in the new PCM. Use the DRBIII® scan tool to change the millage and VIN in the PCM. If this step is not done a diagnostic trouble code (DTC) may be set and SKIM must be done or car will not start if it is a SKIM equipped car. If a SKIM car you must do a secret key transfer also. Refer to the appropriate Powertrain Diagnostic Manual and the DRBIII® scan tool.

(1) Install PCM module to the mounting bracket.
(2) Install electrical connectors and lock.
(3) Install the splash shield.
(4) Lower vehicle.
(5) Connect the negative battery cable.
(6) Using DRBIII® scan tool, program mileage and vehicle identification number (VIN) into PCM. Refer to the DRBIII® scan tool and the appropriate Powertrain Diagnostic Manual.

SLIDING DOOR CONTROL MODULE

DESCRIPTION

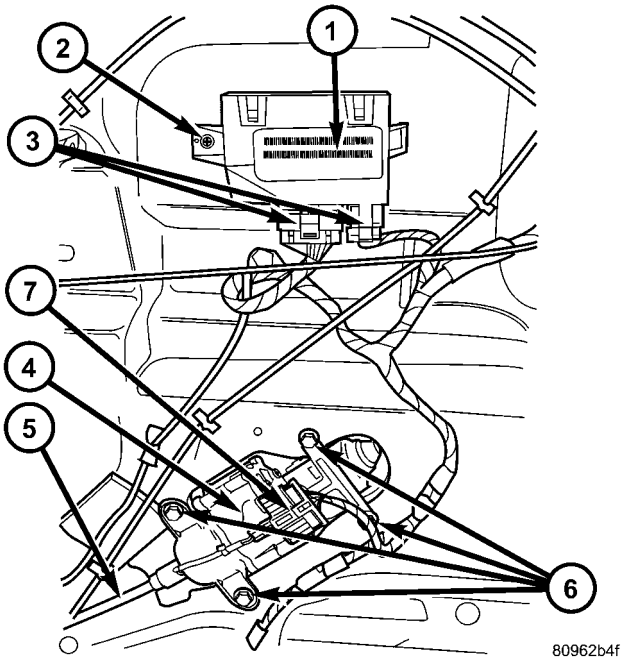

Fig. 15 Power Side Door Components

1 - SLIDING DOOR CONTROL MODULE
2 - MODULE RETAINING SCREW
3 - MODULE ELECTRICAL CONNECTORS
4 - DOOR MOTOR ASSEMBLY
5 - FLEX DRIVE ASSEMBLY
6 - DOOR MOTOR RETAINING FASTENERS
7 - DOOR MOTOR ELECTRICAL CONNECTOR

Vehicles equipped with a power sliding door system utilize a sliding door control module. The sliding door control module is located behind the sliding door trim panel in the center of the door, just above the sliding door motor (Fig. 15). This module controls the operation of the door through the Programmable Communication Interface (PCI) data bus circuit and the Body Control Module (BCM). The sliding door control module contains software technology which enables it to detect resistance to door travel and to reverse door travel in order to avoid damage to the door or to avoid possible personal injury if the obstruction is a person. This feature functions in both the opening and closing cycles. If the power sliding door system develops any problems the control module will store and recall Diagnostic Trouble Codes (DTC). The use of a diagnostic scan tool, such as the DRB III® is required to read and troubleshoot these trouble codes. The sliding door control module can be reflashed if necessary. Refer to the latest Technical Service Bulletin (TSB) Information for any updates.

The power door control module is a replaceable component and cannot be repaired, if found to be faulty it must be replaced.

OPERATION

The power sliding door control module serves as the main computer for the power sliding door system. All power door functions are processed through the power sliding door control module and/or the vehicles Body Control Module (BCM). At the start of a power open command, a signal is sent to the BCM and then to the power sliding door control module via the Programmable Communication Interface (PCI) data bus circuit. This signal, generated by any of the power door command switches, tells the power sliding door control module to activate a power latch release, engage the clutch assembly and drive the door into the full open position. If an obstacle is felt during this power open cycle, the module will reverse direction and close the door. This process is also enabled during a power close cycle. This process will repeat three times, and if a fourth obstacle is detected, the door will go into full manual mode. Once the full open position is obtained, a hold open latch assembly mounted full open switch tells the power sliding door control module that the door has reached the full open position. If the power sliding door system develops any problems the power sliding door control module will store and recall Diagnostic Trouble Codes (DTC). The use of a diagnostic scan tool, such as the DRB III® is required to read and troubleshoot these trouble codes.

DIAGNOSIS AND TESTING

SLIDING DOOR CONTROL MODULE

Any diagnosis of the power sliding door system should begin with the use of the DRB III® diagnostic tool. For information on the use of the DRB III®, refer to the appropriate Diagnostic Procedures information.

Inspect the related wiring harness connectors for broken, bent, pushed out, or corroded terminals. Refer to the appropriate wiring information.

REMOVAL

(1) Disconnect and isolate the battery negative cable.

(2) Remove the appropriate door trim panel from the vehicle. (Refer to 23 - BODY/DOORS - SLIDING/TRIM PANEL - REMOVAL)

(3) Remove the weather shield.

SLIDING DOOR CONTROL MODULE (Continued)

(4) Disconnect the power door control module electrical connectors. Slide the red locking tab out (away from module) and depress connector retaining tab, while pulling straight apart.

(5) Remove the control module retaining screw (Fig. 16).

(6) Remove the module from the vehicle.

INSTALLATION

(1) Position the sliding door control module and install the retaining screw.

(2) Connect the electrical connectors. Slide the locking tab into the locked position.

(3) Install the weather shield.

(4) Install the appropriate door trim panel on the vehicle. (Refer to 23 - BODY/DOORS - SLIDING/ TRIM PANEL - INSTALLATION)

(5) Connect the battery negative cable.

(6) Using an appropriate scan tool, check and erase any power door control module diagnostic trouble codes.

(7) Verify power door system operation. Cycle the power door through one complete open and close cycle.

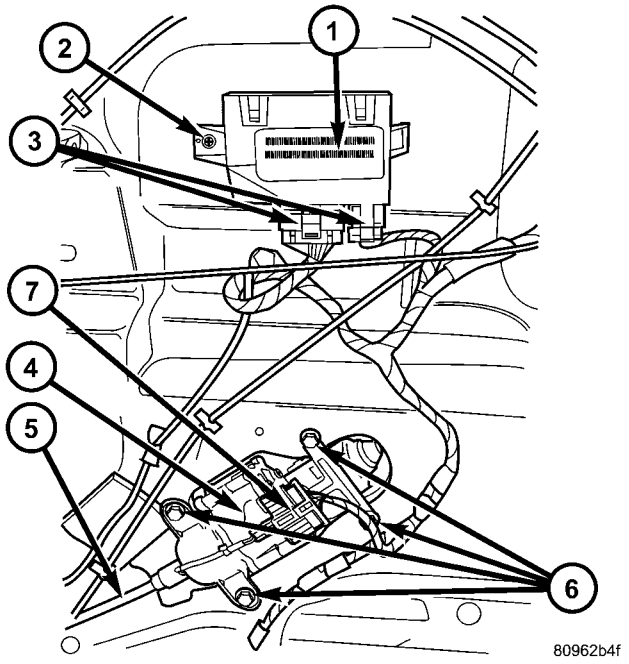

Fig. 16 Power Side Door Components

1 - SLIDING DOOR CONTROL MODULE
2 - MODULE RETAINING SCREW
3 - MODULE ELECTRICAL CONNECTORS
4 - DOOR MOTOR ASSEMBLY
5 - FLEX DRIVE ASSEMBLY
6 - DOOR MOTOR RETAINING FASTENERS
7 - DOOR MOTOR ELECTRICAL CONNECTOR

ENGINE SYSTEMS

TABLE OF CONTENTS

	page
BATTERY SYSTEM	**1**
CHARGING	**21**
STARTING	**31**

BATTERY SYSTEM

TABLE OF CONTENTS

	page
BATTERY SYSTEM	
DESCRIPTION	1
OPERATION	2
DIAGNOSIS AND TESTING	
BATTERY SYSTEM	2
CLEANING	5
INSPECTION	5
SPECIFICATIONS	
BATTERY	6
SPECIAL TOOLS	
BATTERY SYSTEM SPECIAL TOOLS	7
BATTERY	
DESCRIPTION	7
OPERATION	9
DIAGNOSIS AND TESTING	
BATTERY	9
STANDARD PROCEDURE	
SPIRAL PLATE BATTERY CHARGING	10
CONVENTIONAL BATTERY CHARGING	11
OPEN-CIRCUIT VOLTAGE TEST	13
IGNITION-OFF DRAW TEST	13
CHECKING BATTERY ELECTROLYTE LEVEL	14
MICRO 420 BATTERY TESTER	15
REMOVAL - BATTERY	16
INSTALLATION	16
BATTERY HOLDDOWN	
REMOVAL	16
INSTALLATION	16
BATTERY CABLES	
DESCRIPTION	16
OPERATION	17
DIAGNOSIS AND TESTING	
BATTERY CABLES	17
REMOVAL	19
INSTALLATION	19
BATTERY TRAY	
DESCRIPTION	19
REMOVAL	19
INSTALLATION	20

BATTERY SYSTEM

DESCRIPTION

This vehicle is equipped with a single 12-volt battery. All of the components of the battery system are located within the engine compartment. The battery system for this vehicle contains the following related components:

- **Battery** - The storage battery provides a reliable means of storing a renewable source of electrical energy within the vehicle.
- **Battery Cable** - The battery cables connect the battery terminal posts to the vehicle electrical system.
- **Battery Holddown** - The battery holddown hardware secures the battery in the battery tray in the engine compartment.
- **Battery Thermowrap** - The battery thermowrap insulates the battery to protect it from engine compartment temperature extremes.
- **Battery Tray** - The battery tray provides a secure mounting location in the vehicle for the battery and an anchor point for the battery holddown hardware.

BATTERY SYSTEM (Continued)

OPERATION

The battery system is designed to provide a safe, efficient, reliable and mobile means of delivering and storing electrical energy. This electrical energy is required to operate the engine starting system, as well as to operate many of the other vehicle accessory systems for limited durations while the engine and/or the charging system are not operating. The battery system is also designed to provide a reserve of electrical energy to supplement the charging system for short durations while the engine is running and the electrical current demands of the vehicle exceed the output of the charging system. In addition to delivering, and storing electrical energy for the vehicle, the battery system serves as a capacitor and voltage stabilizer for the vehicle electrical system. It absorbs most abnormal or transient voltages caused by the switching of any of the electrical components or circuits in the vehicle.

DIAGNOSIS AND TESTING

BATTERY SYSTEM

The battery, starting, and charging systems in the vehicle operate with one another and must be tested as a complete system. In order for the engine to start and the battery to maintain its charge properly, all of the components that are used in these systems must perform within specifications. It is important that the battery, starting, and charging systems be thoroughly tested and inspected any time a battery needs to be charged or replaced. The cause of abnormal battery discharge, overcharging or early battery failure must be diagnosed and corrected before a battery is replaced and before a vehicle is returned to service. The service information for these systems has been separated within this service manual to make it easier to locate the specific information you are seeking. However, when attempting to diagnose any of these systems, it is important that you keep their interdependency in mind.

The diagnostic procedures used for the battery, starting, and charging systems include the most basic conventional diagnostic methods, to the more sophisticated On-Board Diagnostics (OBD) built into the Powertrain Control Module (PCM). Use of an induction-type milliampere ammeter, a volt/ohmmeter, a battery charger, a carbon pile rheostat (load tester) and a 12-volt test lamp may be required. All OBD-sensed systems are monitored by the PCM. Each monitored circuit is assigned a Diagnostic Trouble Code (DTC). The PCM will store a DTC in electronic memory for any failure it detects. (Refer to 8 - ELECTRICAL/CHARGING - DIAGNOSIS AND TESTING) for the proper charging system on-board diagnostic test procedures.

MICRO 420 BATTERY TESTER

The Micro 420 automotive battery tester is designed to help the dealership technicians diagnose the cause of a defective battery. Follow the instruction manual supplied with the tester to properly diagnose a vehicle. If the instruction manual is not available refer to the standard procedure in this section, which includes the directions for using the Micro 420 battery tester.

BATTERY SYSTEM (Continued)

BATTERY SYSTEM DIAGNOSIS		
CONDITION	POSSIBLE CAUSES	CORRECTION
THE BATTERY SEEMS WEAK OR DEAD WHEN ATTEMPTING TO START THE ENGINE.	1. The electrical system ignition-off draw is excessive.	1. (Refer to 8 - ELECTRICAL/BATTERY SYSTEM/BATTERY - STANDARD PROCEDURE - IGNITION-OFF DRAW TEST) for the proper test procedures. Repair the excessive ignition-off draw, as required.
	2. The charging system is inoperative.	2. Determine if the charging system is performing to specifications. (Refer to 8 - ELECTRICAL/ CHARGING - DIAGNOSIS AND TESTING) for additional charging system diagnosis and testing procedures. Repair the inoperative charging system, as required.
	3. The battery is discharged.	3. Determine the battery state-of-charge using the Micro 420 battery tester. Refer to the Standard Procedures in this section for additional test procedures. Charge the inoperative battery, as required.
	4. The battery terminal connections are loose or corroded.	4. (Refer to 8 - ELECTRICAL/BATTERY SYSTEM/CABLES - DIAGNOSIS AND TESTING) for the proper battery cable diagnosis and testing procedures. Clean and tighten the battery terminal connections, as required.
	5. The battery has an incorrect size or rating for this vehicle.	5. (Refer to 8 - ELECTRICAL/BATTERY SYSTEM - SPECIFICATIONS) for the proper size and rating. Replace an incorrect battery, as required.
	6. The battery is inoperative.	6. Test the battery using the Micro 420 battery tester. Refer to the Standard Procedures in this section for additional test procedures. Replace the inoperative battery, as required.
	7. The starting system is inoperative.	7. Determine if the starting system is performing to specifications. (Refer to 8 - ELECTRICAL/ STARTING - DIAGNOSIS AND TESTING) for the proper starting system diagnosis and testing procedures. Repair the inoperative starting system, as required.
	8. The battery is physically damaged.	8. Inspect the battery for loose terminal posts or a cracked and leaking case. Replace the damaged battery, as required.

BATTERY SYSTEM (Continued)

BATTERY SYSTEM DIAGNOSIS		
CONDITION	POSSIBLE CAUSES	CORRECTION
THE BATTERY STATE OF CHARGE CANNOT BE MAINTAINED.	1. The battery has an incorrect size or rating for this vehicle.	1. (Refer to 8 - ELECTRICAL/BATTERY SYSTEM - SPECIFICATIONS) for the proper specifications. Replace an incorrect battery, as required.
	2. The battery terminal connections are loose or corroded.	2. (Refer to 8 - ELECTRICAL/BATTERY SYSTEM/CABLES - DIAGNOSIS AND TESTING) for the proper cable diagnosis and testing procedures. Clean and tighten the battery terminal connections, as required.
	3. The electrical system ignition-off draw is excessive.	3. (Refer to 8 - ELECTRICAL/BATTERY SYSTEM/BATTERY - STANDARD PROCEDURE - IGNITION-OFF DRAW TEST) for the proper test procedures. Repair the inoperative electrical system, as required.
	4. The battery is inoperative.	4. Test the battery using the Micro 420 battery tester. Refer to Standard Procedures for additional test procedures. Replace the inoperative battery, as required.
	5. The starting system is inoperative.	5. Determine if the starting system is performing to specifications. (Refer to 8 - ELECTRICAL/ STARTING - DIAGNOSIS AND TESTING) for the proper starting system diagnosis and testing procedures. Repair the inoperative starting system, as required.
	6. The charging system is inoperative.	6. Determine if the charging system is performing to specifications. (Refer to 8 - ELECTRICAL/ CHARGING - DIAGNOSIS AND TESTING) for charging system diagnosis and testing procedures. Repair the inoperative charging system, as required.
	7. Electrical loads exceed the output of the charging system.	7. Inspect the vehicle for aftermarket electrical equipment which might cause excessive electrical loads.
	8. Slow driving or prolonged idling with high-amperage draw loads in use.	8. Advise the vehicle operator, as required.
THE BATTERY WILL NOT ACCEPT A CHARGE.	1. The battery is inoperative.	1. Test the battery using the Micro 420 battery tester.. Charge or replace the inoperative battery, as required.

BATTERY SYSTEM (Continued)

CLEANING

The following information details the recommended cleaning procedures for the battery and related components. In addition to the maintenance schedules found in this service manual and the owner's manual, it is recommended that these procedures be performed any time the battery or related components must be removed for vehicle service.

(1) Clean the battery cable terminal clamps of all corrosion. Remove any corrosion using a wire brush or a post and terminal cleaning tool, and a sodium bicarbonate (baking soda) and warm water cleaning solution (Fig. 1).

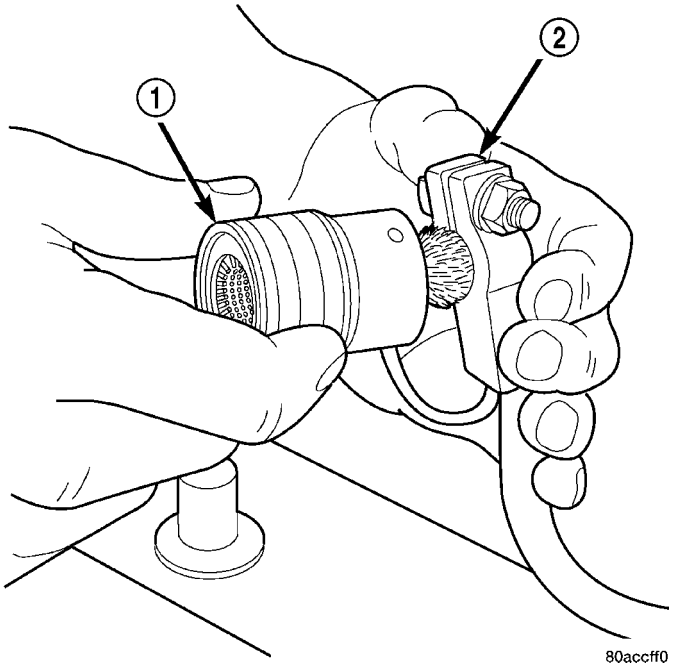

Fig. 1 Clean Battery Cable Terminal Clamp - Typical

1 - TERMINAL BRUSH
2 - BATTERY CABLE

(2) Clean the battery tray and battery holddown hardware of all corrosion. Remove any corrosion using a wire brush and a sodium bicarbonate (baking soda) and warm water cleaning solution. Paint any exposed bare metal.

(3) If the removed battery is to be reinstalled, clean the outside of the battery case and the top cover with a sodium bicarbonate (baking soda) and warm water cleaning solution using a stiff bristle parts cleaning brush to remove any acid film (Fig. 2). Rinse the battery with clean water. Ensure that the cleaning solution does not enter the battery cells through the vent holes. If the battery is being replaced, refer to Battery System Specifications for the factory-installed battery specifications. Confirm that the replacement battery is the correct size and has the correct ratings for the vehicle.

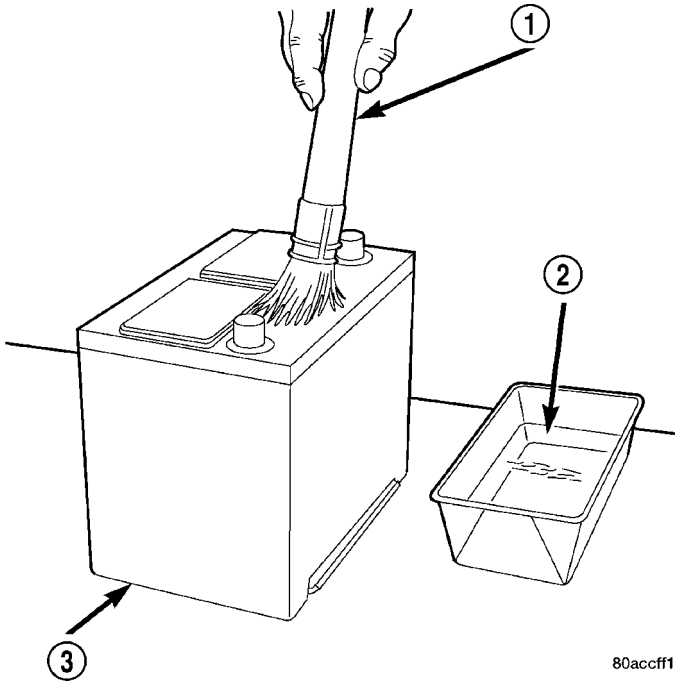

Fig. 2 Clean Battery - Typical

1 - CLEANING BRUSH
2 - WARM WATER AND BAKING SODA SOLUTION
3 - BATTERY

(4) Clean the battery thermowrap with a sodium bicarbonate (baking soda) and warm water cleaning solution using a soft bristle parts cleaning brush to remove any acid film.

(5) Clean any corrosion from the battery terminal posts with a wire brush or a post and terminal cleaner, and a sodium bicarbonate (baking soda) and warm water cleaning solution (Fig. 3).

INSPECTION

The following information details the recommended inspection procedures for the battery and related components. It is recommended that these procedures be performed any time the battery or related components must be removed for vehicle service.

(1) Inspect the battery cable terminal clamps for damage. Replace any battery cable that has a damaged or deformed terminal clamp.

(2) Inspect the battery tray and battery holddown hardware for damage. Replace any damaged parts.

(3) Slide the thermowrap off of the battery case. Inspect the battery case for cracks or other damage that could result in electrolyte leaks. Also, check the battery terminal posts for looseness. Batteries with damaged cases or loose terminal posts must be replaced.

(4) Inspect the battery thermowrap for tears, cracks, deformation or other damage. Replace any battery thermal wrap that has been damaged.

BATTERY SYSTEM (Continued)

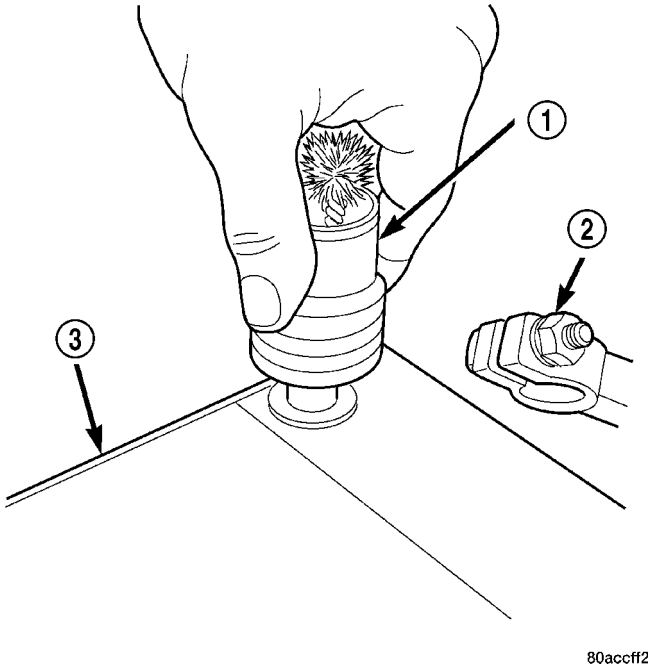

Fig. 3 Clean Battery Terminal Post - Typical

1 - TERMINAL BRUSH
2 - BATTERY CABLE
3 - BATTERY

(5) Inspect the battery built-in test indicator sight glass (if equipped) for an indication of the battery condition. If the battery is discharged, charge as required. (Refer to 8 - ELECTRICAL/BATTERY SYSTEM/BATTERY - STANDARD PROCEDURE - BATTERY CHARGING) for the proper battery charging procedures.

SPECIFICATIONS

BATTERY

The battery Group Size number, the Cold Cranking Amperage (CCA) rating, and the Reserve Capacity (RC) rating or Ampere-Hours (AH) rating can be found on the original equipment battery label. Be certain that a replacement battery has the correct Group Size number, as well as CCA, and RC or AH ratings that equal or exceed the original equipment specification for the vehicle being serviced. Battery sizes and ratings are discussed in more detail below.

- **Group Size** - The outside dimensions and terminal placement of the battery conform to standards established by the Battery Council International (BCI). Each battery is assigned a BCI Group Size number to help identify a correctly-sized replacement.
- **Cold Cranking Amperage** - The Cold Cranking Amperage (CCA) rating specifies how much current (in amperes) the battery can deliver for thirty seconds at -18° C (0° F). Terminal voltage must not fall below 7.2 volts during or after the thirty second discharge period. The CCA required is generally higher as engine displacement increases, depending also upon the starter current draw requirements.
- **Reserve Capacity** - The Reserve Capacity (RC) rating specifies the time (in minutes) it takes for battery terminal voltage to fall below 10.5 volts, at a discharge rate of 25 amperes. RC is determined with the battery fully-charged at 26.7° C (80° F). This rating estimates how long the battery might last after a charging system failure, under minimum electrical load.
- **Ampere-Hours** - The Ampere-Hours (AH) rating specifies the current (in amperes) that a battery can deliver steadily for twenty hours, with the voltage in the battery not falling below 10.5 volts. This rating is also sometimes identified as the twenty-hour discharge rating.

BATTERY CLASSIFICATIONS & RATINGS					
Part Number	BCI Group Size Classification	Cold Cranking Amperage	Reserve Capacity	Ampere - Hours	Load Test Amperage
4686158AD	34	500	110 Minutes	60	250
4727159AD	34	600	120 Minutes	66	300
4727242AD	DIN H6	600	120 Minutes	66	300
4868999AA	34	700	90 Minutes	50	350

BATTERY SYSTEM (Continued)

SPECIAL TOOLS

BATTERY SYSTEM SPECIAL TOOLS

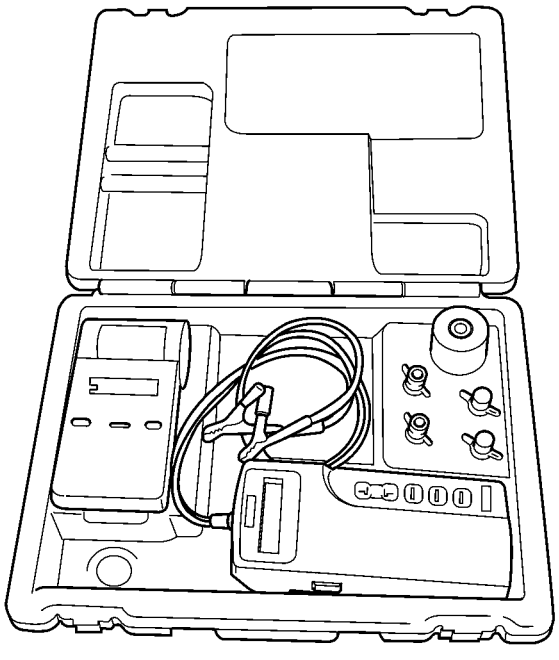

Micro 420 Battery Tester

BATTERY

DESCRIPTION

There are three different batteries available for this vehicle. Vehicles equipped with a diesel engine utilize a spiral wound plate designed battery with recombination technology. This is a maintenance-free battery that is capable of delivering more power than a conventional battery. This additional power is required by a diesel engine during cold cranking. Vehicles equipped with a gasoline engine utilize a conventional battery. Refer to the following information for detailed differences and descriptions of these batteries.

SPIRAL PLATE BATTERY - DIESEL ENGINE

By tightly winding layers of spiral grids and acid-permeated vitreous separators into cells, the battery has more power and service life than conventional batteries of the same size. The spiral plate battery is permanently sealed. Through gas recombination, hydrogen and oxygen within the battery are captured during normal charging and reunited to form the water within the electrolyte, eliminating the need to add distilled water. Therefore, these batteries have non-removable battery vent caps (Fig. 4).

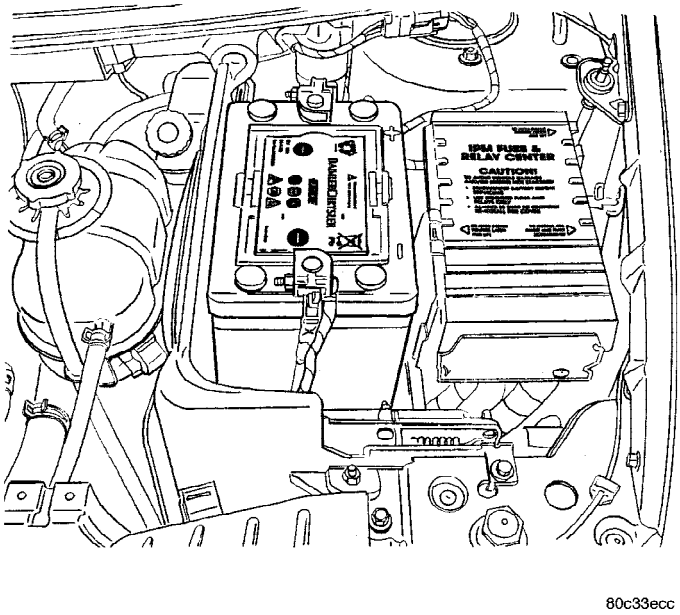

Fig. 4 MAINTENANCE-FREE DIESEL ENGINE BATTERY

The acid inside a spiral plate battery is bound within the vitreous separators, ending the threat of acid leaks. This feature allows the battery to be installed in any position anywhere in the vehicle.

Spiral plate technology is the process by which the plates holding the active material in the battery are wound tightly in coils instead of hanging flat, like conventional batteries. This design has a lower internal resistance and also increases the active material surface area.

WARNING: NEVER EXCEED 14.4 VOLTS WHEN CHARGING A SPIRAL PLATE BATTERY. PERSONAL INJURY AND/OR BATTERY DAMAGE MAY RESULT.

Due to the maintanance-free design, distilled water cannot be added to this battery. Therefore, if more than 14.4 volts are used during the spiral plate battery charging process, water vapor can be exhausted through the pressure-sensitive battery vents and lost for good. This can permanently damage the spiral plate battery.

BATTERY (Continued)

CONVENTIONAL BATTERY - GASOLINE ENGINE

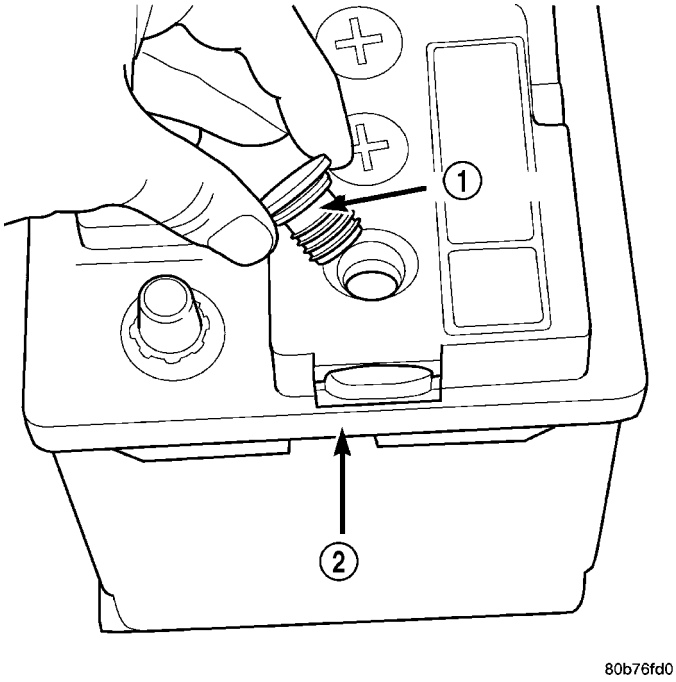

Fig. 5 BATTERY CELL CAP REMOVAL/ INSTALLATION - LOW-MAINTANANCE GASOLINE ENGINE BATTERY - EXPORT

1 - BATTERY CELL CAP
2 - BATTERY CASE

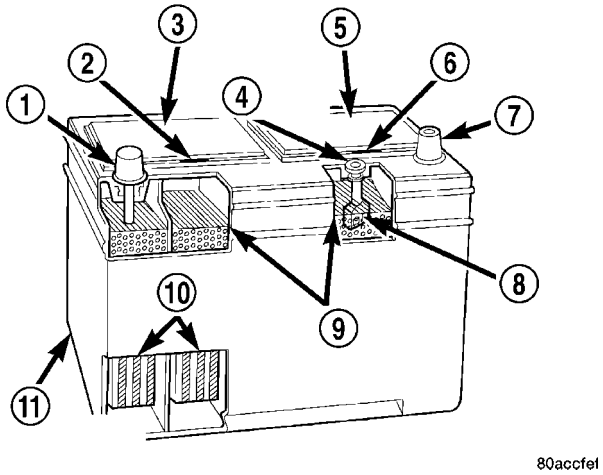

Fig. 6 Maintenance-Free Battery - Domestic

1 - POSITIVE POST
2 - VENT
3 - CELL CAP
4 - VENT
5 - CELL CAP
6 - VENT
7 - NEGATIVE POST
8 - INDICATOR EYE (if equipped)
9 - ELECTROLYTE LEVEL
10 - PLATE GROUPS
11 - MAINTENANCE-FREE BATTERY

Low-maintenance batteries are used on export vehicles equipped with a gasoline engine, these batteries have removable battery cell caps (Fig. 5). Water **can** be added to this battery. Under normal service, the composition of this battery reduces gassing and water loss at normal charge rates. However these batteries may require additional distilled water after years of service.

Maintenance-free batteries are standard factory-installed equipment on all domestic vehicles. Male post type terminals made of a soft lead material protrude from the top of the molded plastic battery case (Fig. 6)to provide the means for connecting the battery to the vehicle electrical system. The battery positive terminal post is visibly larger in diameter than the negative terminal post, for easy identification. The letters **POS** and **NEG** are also molded into the top of the battery case adjacent to their respective positive and negative terminal posts for additional identification confirmation.

This battery is designed to provide a safe, efficient and reliable means of storing electrical energy in a chemical form. This means of energy storage allows the battery to produce the electrical energy required to operate the engine starting system, as well as to operate many of the other vehicle accessory systems for limited durations while the engine and/or the charging system are not operating. The battery is made up of six individual cells that are connected in series. Each cell contains positively charged plate groups that are connected with lead straps to the positive terminal post, and negatively charged plate groups that are connected with lead straps to the negative terminal post. Each plate consists of a stiff mesh framework or grid coated with lead dioxide (positive plate) or sponge lead (negative plate). Insulators or plate separators made of a non-conductive material are inserted between the positive and negative plates to prevent them from contacting or shorting against one another. These dissimilar metal plates are submerged in a sulfuric acid and water solution called an electrolyte.

Some factory-installed batteries have a built-in test indicator (hydrometer). The color visible in the sight glass of the indicator will reveal the battery condition. For more information on the use of the built-in test indicator, refer to **Standard Procedures**. The chemical composition of the metal coated plates within the low-maintenance battery used in export models reduces battery gassing and water loss at normal charge and discharge rates. Therefore, the battery should not require additional water in normal service. If the electrolyte level in this battery does become low, distilled water must be added. However, rapid loss of electrolyte can be caused by an overcharging condition. Be certain to diagnose the charging system after replenishing the water in the

battery for a low electrolyte condition and before returning the vehicle to service. (Refer to 8 - ELECTRICAL/CHARGING - DIAGNOSIS AND TESTING) for additional information.

The battery Group Size number, the Cold Cranking Amperage (CCA) rating, and the Reserve Capacity (RC) rating or Ampere-Hours (AH) rating can be found on the original equipment battery label. Be certain that a replacement battery has the correct Group Size number, as well as CCA, and RC or AH ratings that equal or exceed the original equipment specification for the vehicle being serviced. (Refer to 8 - ELECTRICAL/BATTERY SYSTEM - SPECIFICATIONS) for the proper factory-installed battery specifications.

OPERATION

The battery is designed to store electrical energy in a chemical form. When an electrical load is applied to the terminals of the battery, an electrochemical reaction occurs. This reaction causes the battery to discharge electrical current from its terminals. As the battery discharges, a gradual chemical change takes place within each cell. The sulfuric acid in the electrolyte combines with the plate materials, causing both plates to slowly change to lead sulfate. At the same time, oxygen from the positive plate material combines with hydrogen from the sulfuric acid, causing the electrolyte to become mainly water. The chemical changes within the battery are caused by the movement of excess or free electrons between the positive and negative plate groups. This movement of electrons produces a flow of electrical current through the load device attached to the battery terminals.

As the plate materials become more similar chemically, and the electrolyte becomes less acid, the voltage potential of each cell is reduced. However, by charging the battery with a voltage higher than that of the battery itself, the battery discharging process is reversed. Charging the battery gradually changes the sulfated lead plates back into sponge lead and lead dioxide, and the water back into sulfuric acid. This action restores the difference in the electron charges deposited on the plates, and the voltage potential of the battery cells. For a battery to remain useful, it must be able to produce high-amperage current over an extended period. A battery must also be able to accept a charge, so that its voltage potential may be restored.

The battery is vented to release excess hydrogen gas that is created when the battery is being charged or discharged. However, even with these vents, hydrogen gas can collect in or around the battery. If hydrogen gas is exposed to flame or sparks, it may ignite. If the electrolyte level is low, the battery may arc internally and explode. If the battery is equipped with removable cell caps, add distilled water whenever the electrolyte level is below the top of the plates. If the battery cell caps cannot be removed, the battery must be replaced if the electrolyte level becomes low.

DIAGNOSIS AND TESTING

BATTERY

The battery must be completely charged and the terminals should be properly cleaned and inspected before diagnostic procedures are performed. (Refer to 8 - ELECTRICAL/BATTERY SYSTEM - CLEANING) for the proper cleaning procedures, and (Refer to 8 - ELECTRICAL/BATTERY SYSTEM - INSPECTION) for the proper battery inspection procedures. (Refer to 8 - ELECTRICAL/BATTERY SYSTEM/BATTERY - STANDARD PROCEDURE) for the proper battery charging procedures.

MICRO 420 BATTERY TESTER

The Micro 420 automotive battery tester is designed to help the dealership technicians diagnose the cause of a defective battery. Follow the instruction manual supplied with the tester or (Refer to 8 - ELECTRICAL/BATTERY SYSTEM/BATTERY - STANDARD PROCEDURE - USING THE MICRO 420 BATTERY TESTER) to properly diagnose a vehicle

WARNING: IF THE BATTERY SHOWS SIGNS OF FREEZING, LEAKING OR LOOSE POSTS, DO NOT TEST, ASSIST-BOOST, OR CHARGE. THE BATTERY MAY ARC INTERNALLY AND EXPLODE. PERSONAL INJURY AND/OR VEHICLE DAMAGE MAY RESULT.

WARNING: EXPLOSIVE HYDROGEN GAS FORMS IN AND AROUND THE BATTERY. DO NOT SMOKE, USE FLAME, OR CREATE SPARKS NEAR THE BATTERY. PERSONAL INJURY AND/OR VEHICLE DAMAGE MAY RESULT.

WARNING: THE BATTERY CONTAINS SULFURIC ACID, WHICH IS POISONOUS AND CAUSTIC. AVOID CONTACT WITH THE SKIN, EYES, OR CLOTHING. IN THE EVENT OF CONTACT, FLUSH WITH WATER AND CALL A PHYSICIAN IMMEDIATELY. KEEP OUT OF THE REACH OF CHILDREN.

A battery that will not accept a charge is inoperative, and must be replaced. Further testing is not required. A fully-charged battery must be tested to determine its cranking capacity. A battery that is ful-

BATTERY (Continued)

ly-charged, but does not pass the Micro 420 or load test, is inoperative and must be replaced.

NOTE: Completely discharged batteries may take several hours to accept a charge. (Refer to 8 - ELECTRICAL/BATTERY SYSTEM/BATTERY - STANDARD PROCEDURE) for the proper battery charging procedures.

STANDARD PROCEDURE

SPIRAL PLATE BATTERY CHARGING

Vehicles equipped with a diesel engine utilize a unique spiral plate battery. This battery has a maximum charging voltage that must not be exceeded in order to restore the battery to its full potential, failure to use the following spiral plate battery charging procedure could result in damage to the battery or personal injury.

Battery charging is the means by which the battery can be restored to its full voltage potential. A battery is fully-charged when:

- Micro 420 battery tester indicates battery is OK.
- Open-circuit voltage of the battery is 12.65 volts or above.
- Battery passes Load Test multiple times.

WARNING: IF THE BATTERY SHOWS SIGNS OF FREEZING, LEAKING, LOOSE POSTS OR LOW ELECTROLYTE LEVEL, DO NOT TEST, ASSIST-BOOST, OR CHARGE. THE BATTERY MAY ARC INTERNALLY AND EXPLODE. PERSONAL INJURY AND/OR VEHICLE DAMAGE MAY RESULT.

CAUTION: Always disconnect and isolate the battery negative cable before charging a battery. Charge the battery directly at the battery terminals. Do not exceed 14.4 volts while charging a battery.

CAUTION: The battery should not be hot to the touch. If the battery feels hot to the touch, turn off the charger and let the battery cool before continuing the charging operation. Damage to the battery may result.

After the battery has been charged to 12.6 volts or greater, perform a load test to determine the battery cranking capacity. (Refer to 8 - ELECTRICAL/BATTERY SYSTEM/BATTERY - STANDARD PROCEDURE - USING THE MICRO 420 BATTERY TESTER) for the proper battery test procedures. If the battery passes a load test, return the battery to service. If the battery will not pass a load test, it is inoperative and must be replaced.

Clean and inspect the battery hold downs, tray, terminals, posts, and top before completing battery service. (Refer to 8 - ELECTRICAL/BATTERY SYSTEM - CLEANING) for the proper battery system cleaning procedures, and (Refer to 8 - ELECTRICAL/BATTERY SYSTEM - INSPECTION) for the proper battery system inspection procedures.

CHARGING A COMPLETELY DISCHARGED BATTERY – SPIRAL PLATE BATTERY

The following procedure should be used to recharge a completely discharged battery. Unless this procedure is properly followed, a good battery may be needlessly replaced.

(1) Measure the voltage at the battery posts with a voltmeter, accurate to 1/10 (0.10) volt (Fig. 7). (Refer to 8 - ELECTRICAL/BATTERY SYSTEM/BATTERY - REMOVAL) for instructions on how to access the battery. If the reading is below ten volts, the battery charging current will be low. It could take several hours before the battery accepts a current greater than a few milliamperes. Such low current may not be detectable on the ammeters built into many battery chargers.

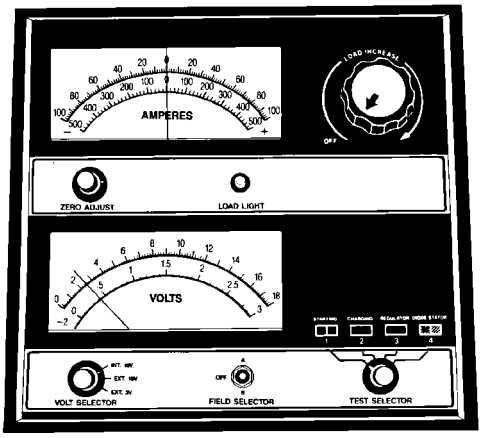

Fig. 7 Voltmeter - Typical

(2) Disconnect and isolate the battery negative cable. Connect the battery charger leads. Some battery chargers are equipped with polarity-sensing circuitry. This circuitry protects the battery charger and the battery from being damaged if they are improperly connected. If the battery state-of-charge is too low for the polarity-sensing circuitry to detect, the battery charger will not operate. This makes it appear that the battery will not accept charging current. See the instructions provided by the manufacturer of the battery charger for details on how to bypass the polarity-sensing circuitry.

(3) Battery chargers vary in the amount of voltage and current they provide. The amount of time required for a battery to accept measurable charging current at various voltages is shown in the Charge

BATTERY (Continued)

Rate Table. If the charging current is still not measurable at the end of the charging time, the battery is inoperative and must be replaced. If the charging current is measurable during the charging time, the battery may be good and the charging should be completed in the normal manner.

SPIRAL-PLATE BATTERY CHARGE RATE TABLE	
Voltage	Minutes
14.4 volts maximum	up to 10 minutes
13.0 to 14 volts	up to 20 minutes
12.9 volts or less	up to 30 minutes

CHARGING TIME REQUIRED

The time required to charge a battery will vary, depending upon the following factors:

- **Battery Capacity** - A completely discharged heavy-duty battery requires twice the charging time of a small capacity battery.
- **Temperature** - A longer time will be needed to charge a battery at -18° C (0° F) than at 27° C (80° F). When a fast battery charger is connected to a cold battery, the current accepted by the battery will be very low at first. As the battery warms, it will accept a higher charging current rate (amperage).
- **Charger Capacity** - A battery charger that supplies only five amperes will require a longer charging time. A battery charger that supplies eight amperes will require a shorter charging time.
- **State-Of-Charge** - A completely discharged battery requires more charging time than a partially discharged battery. Electrolyte is nearly pure water in a completely discharged battery. At first, the charging current (amperage) will be low. As the battery charges, the specific gravity of the electrolyte will gradually rise.

The Battery Charging Time Table gives an indication of the time required to charge a typical battery at room temperature based upon the battery state-of-charge and the charger capacity.

SPIRAL-PLATE BATTERY CHARGING TIME TABLE		
Charging Amperage	5 Amps	8 Amps
Open Circuit Voltage	Hours Charging @ 21° C (70° F)	
12.25 to 12.49	6 hours	3 hours
12.00 to 12.24	10 hours	5 hours
10.00 to 11.99	14 hours	7 hours
Below 10.00	18 hours	9 hours

CONVENTIONAL BATTERY CHARGING

Vehicles equipped with a diesel engine utilize a unique spiral plate battery. This battery has a maximum charging voltage that must be used in order to restore the battery to its full potential, failure to use the spiral plate battery charging procedure could result in damage to the battery or personal injury.

Battery charging is the means by which the battery can be restored to its full voltage potential. A battery is fully-charged when:

- Micro 420 battery tester indicates battery is OK.
- Open-circuit voltage of the battery is 12.65 volts or above.
- Battery passes Load Test multiple times.

WARNING: IF THE BATTERY SHOWS SIGNS OF FREEZING, LEAKING, LOOSE POSTS, DO NOT TEST, ASSIST-BOOST, OR CHARGE. THE BATTERY MAY ARC INTERNALLY AND EXPLODE. PERSONAL INJURY AND/OR VEHICLE DAMAGE MAY RESULT.

WARNING: EXPLOSIVE HYDROGEN GAS FORMS IN AND AROUND THE BATTERY. DO NOT SMOKE, USE FLAME, OR CREATE SPARKS NEAR THE BATTERY. PERSONAL INJURY AND/OR VEHICLE DAMAGE MAY RESULT.

WARNING: THE BATTERY CONTAINS SULFURIC ACID, WHICH IS POISONOUS AND CAUSTIC. AVOID CONTACT WITH THE SKIN, EYES, OR CLOTHING. IN THE EVENT OF CONTACT, FLUSH WITH WATER AND CALL A PHYSICIAN IMMEDIATELY. KEEP OUT OF THE REACH OF CHILDREN.

WARNING: IF THE BATTERY IS EQUIPPED WITH REMOVABLE CELL CAPS, BE CERTAIN THAT EACH OF THE CELL CAPS IS IN PLACE AND TIGHT BEFORE THE BATTERY IS RETURNED TO SERVICE. PERSONAL INJURY AND/OR VEHICLE DAMAGE MAY RESULT FROM LOOSE OR MISSING CELL CAPS.

CAUTION: Always disconnect and isolate the battery negative cable before charging a battery. Do not exceed sixteen volts while charging a battery. Damage to the vehicle electrical system components may result.

BATTERY (Continued)

CAUTION: Battery electrolyte will bubble inside the battery case during normal battery charging. Electrolyte boiling or being discharged from the battery vents indicates a battery overcharging condition. Immediately reduce the charging rate or turn off the charger to evaluate the battery condition. Damage to the battery may result from overcharging.

CAUTION: The battery should not be hot to the touch. If the battery feels hot to the touch, turn off the charger and let the battery cool before continuing the charging operation. Damage to the battery may result.

After the battery has been charged to an open-circuit voltage reading of 12.4 volts or greater, retest the battery with the Micro 420 tester or perform a load test to determine the battery cranking capacity. (Refer to 8 - ELECTRICAL/BATTERY SYSTEM/BATTERY - STANDARD PROCEDURE) for the proper battery load test procedures. If the battery passes a load test, return the battery to service. If the battery will not pass a load test, it is inoperative and must be replaced.

Clean and inspect the battery hold downs, tray, terminals, posts, and top before completing battery service. (Refer to 8 - ELECTRICAL/BATTERY SYSTEM - CLEANING) for the proper battery system cleaning procedures, and (Refer to 8 - ELECTRICAL/BATTERY SYSTEM - INSPECTION) for the proper battery system inspection procedures.

CHARGING A COMPLETELY DISCHARGED CONVENTIONAL BATTERY

The following procedure should be used to recharge a completely discharged battery. Unless this procedure is properly followed, a good battery may be needlessly replaced.

(1) Measure the voltage at the battery posts with a voltmeter, accurate to 1/10 (0.10) volt (Fig. 8). If the reading is below ten volts, the battery charging current will be low. It could take some time before the battery accepts a current greater than a few milliamperes. Such low current may not be detectable on the ammeters built into many battery chargers.

(2) Disconnect and isolate the battery negative cable. Connect the battery charger leads. Some battery chargers are equipped with polarity-sensing circuitry. This circuitry protects the battery charger and the battery from being damaged if they are improperly connected. If the battery state-of-charge is too low for the polarity-sensing circuitry to detect, the battery charger will not operate. This makes it appear that the battery will not accept charging current. See the instructions provided by the manufacturer of the battery charger for details on how to bypass the polarity-sensing circuitry.

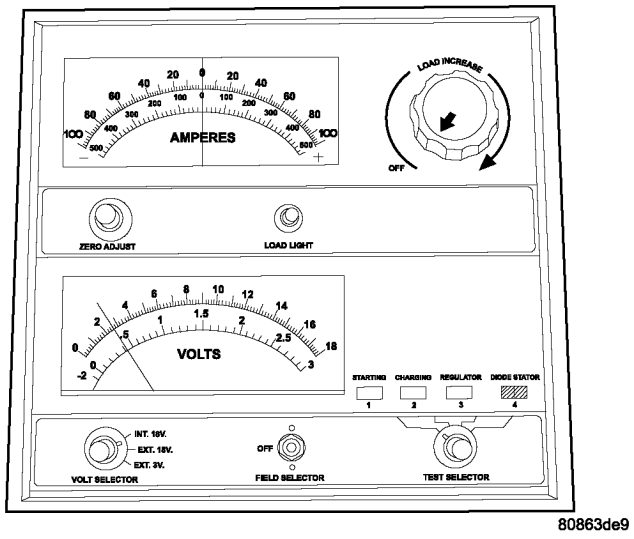

Fig. 8 VOLTMETER ACCURATE TO 1/10 VOLT

(3) Battery chargers vary in the amount of voltage and current they provide. The amount of time required for a battery to accept measurable charging current at various voltages is shown in the Charge Rate Table. If the charging current is still not measurable at the end of the charging time, the battery is inoperative and must be replaced. If the charging current is measurable during the charging time, the battery may be good and the charging should be completed in the normal manner.

CONVENTIONAL BATTERY CHARGE RATE TABLE	
Voltage	Minutes
16.0 volts maximum	up to 10 min.
14.0 to 15.9 volts	up to 20 min.
13.9 volts or less	up to 30 min.

CHARGING TIME REQUIRED

The time required to charge a battery will vary, depending upon the following factors:

- **Battery Capacity** - A completely discharged heavy-duty battery requires twice the charging time of a small capacity battery.
- **Temperature** - A longer time will be needed to charge a battery at -18° C (0° F) than at 27° C (80° F). When a fast battery charger is connected to a cold battery, the current accepted by the battery will be very low at first. As the battery warms, it will accept a higher charging current rate (amperage).
- **Charger Capacity** - A battery charger that supplies only five amperes will require a longer charging time. A battery charger that supplies

BATTERY (Continued)

twenty amperes or more will require a shorter charging time.

- **State-Of-Charge** - A completely discharged battery requires more charging time than a partially discharged battery. Electrolyte is nearly pure water in a completely discharged battery. At first, the charging current (amperage) will be low. As the battery charges, the specific gravity of the electrolyte will gradually rise.

The Conventional Battery Charging Time Table gives an indication of the time required to charge a typical battery at room temperature based upon the battery state-of-charge and the charger capacity.

CONVENTIONAL BATTERY CHARGING TIME TABLE			
Charging Amperage	5 Amps	10 Amps	20 Amps
Open Circuit Voltage	Hours Charging @ 21° C (70° F)		
12.25 to 12.49	6 hours	3 hours	1.5 hours
12.00 to 12.24	10 hours	5 hours	2.5 hours
10.00 to 11.99	14 hours	7 hours	3.5 hours
Below 10.00	18 hours	9 hours	4.5 hours

OPEN-CIRCUIT VOLTAGE TEST

A battery open-circuit voltage (no load) test will show the approximate state-of-charge of a battery. This test can be used if no other battery tester is available.

Before proceeding with this test, completely charge the battery. (Refer to 8 - ELECTRICAL/BATTERY SYSTEM/BATTERY - STANDARD PROCEDURE) for the proper battery charging procedures.

(1) Before measuring the open-circuit voltage, the surface charge must be removed from the battery. Turn on the headlamps for fifteen seconds, then allow up to five minutes for the battery voltage to stabilize.

(2) Disconnect and isolate both battery cables, negative cable first.

(3) Using a voltmeter connected to the battery posts (see the instructions provided by the manufacturer of the voltmeter), measure the open-circuit voltage.

See the Open-Circuit Voltage Table. This voltage reading will indicate the battery state-of-charge, but will not reveal its cranking capacity. If a battery has an open-circuit voltage reading of 12.4 volts or greater, it may be load tested to reveal its cranking capacity. (Refer to 8 - ELECTRICAL/BATTERY SYSTEM/BATTERY - STANDARD PROCEDURE - USING THE MICRO 420 BATTERY TESTER) for the proper battery load test procedures.

OPEN CIRCUIT VOLTAGE TABLE	
Open Circuit Voltage	Charge Percentage
11.7 volts or less	0%
12.0 volts	25%
12.2 volts	50%
12.45 volts	75%
12.65 volts or more	100%

IGNITION-OFF DRAW TEST

The term Ignition-Off Draw (IOD) identifies a normal condition where power is being drained from the battery with the ignition switch in the Off position. A normal vehicle electrical system will draw from fifteen to twenty-five milliamperes (0.015 to 0.025 ampere) with the ignition switch in the Off position, and all non-ignition controlled circuits in proper working order. Up to twenty-five milliamperes are needed to enable the memory functions for the Powertrain Control Module (PCM), digital clock, electronically tuned radio, and other modules which may vary with the vehicle equipment.

A vehicle that has not been operated for approximately twenty-one days, may discharge the battery to an inadequate level. When a vehicle will not be used for twenty-one days or more (stored), remove the IOD fuse from the Integrated Power Module (IPM). This will reduce battery discharging.

Excessive IOD can be caused by:

- Electrical items left on.
- Faulty or improperly adjusted switches.
- Faulty or shorted electronic modules and components.
- An internally shorted generator.
- Intermittent shorts in the wiring.

If the IOD is over twenty-five milliamperes, the problem must be found and corrected before replacing a battery. In most cases, the battery can be charged and returned to service after the excessive IOD condition has been corrected.

(1) Verify that all electrical accessories are off. Turn off all lamps, remove the ignition key, and close all doors. If the vehicle is equipped with an illuminated entry system or an electronically tuned radio, allow the electronic timer function of these systems to automatically shut off (time out). This may take up to twenty minutes.

(2) Disconnect the battery negative cable.

BATTERY (Continued)

(3) Set an electronic digital multi-meter to its highest amperage scale. Connect the multi-meter between the disconnected battery negative cable terminal clamp and the battery negative terminal post. Make sure that the doors remain closed so that the illuminated entry system is not activated. The multi-meter amperage reading may remain high for up to three minutes, or may not give any reading at all while set in the highest amperage scale, depending upon the electrical equipment in the vehicle. The multi-meter leads must be securely clamped to the battery negative cable terminal clamp and the battery negative terminal post. If continuity between the battery negative terminal post and the negative cable terminal clamp is lost during any part of the IOD test, the electronic timer function will be activated and all of the tests will have to be repeated.

(4) After about three minutes, the high-amperage IOD reading on the multi-meter should become very low or nonexistent, depending upon the electrical equipment in the vehicle. If the amperage reading remains high, remove and replace each fuse or circuit breaker in the Integrated Power Module (IPM), one at a time until the amperage reading becomes very low, or nonexistent. Refer to the appropriate wiring information for complete Integrated Power Module fuse, circuit breaker, and circuit identification. This will isolate each circuit and identify the circuit that is the source of the high-amperage IOD. If the amperage reading remains high after removing and replacing each fuse and circuit breaker, disconnect the wire harness from the generator. If the amperage reading now becomes very low or nonexistent, (Refer to 8 - ELECTRICAL/CHARGING - DIAGNOSIS AND TESTING) for the proper charging system diagnosis and testing procedures. After the high-amperage IOD has been corrected, switch the multi-meter to progressively lower amperage scales and, if necessary, repeat the fuse and circuit breaker remove-and-replace process to identify and correct all sources of excessive IOD. It is now safe to select the lowest milliampere scale of the multi-meter to check the low-amperage IOD.

CAUTION: Do not open any doors, or turn on any electrical accessories with the lowest milliampere scale selected, or the multi-meter may be damaged.

(5) Allow twenty minutes for the IOD to stabilize and observe the multi-meter reading. The low-amperage IOD should not exceed twenty-five milliamperes (0.025 ampere). If the current draw exceeds twenty-five milliamperes, isolate each circuit using the fuse and circuit breaker remove-and-replace process in Step 4. The multi-meter reading will drop to within the acceptable limit when the source of the excessive current draw is disconnected. Repair this circuit as required; whether a wiring short, incorrect switch adjustment, or a component failure is at fault.

CHECKING BATTERY ELECTROLYTE LEVEL

The following procedure can be used to check the electrolyte level in a low-maintenance lead-acid battery.

(1) Unscrew and remove the battery cell caps with a flat-bladed screw driver (Fig. 9).

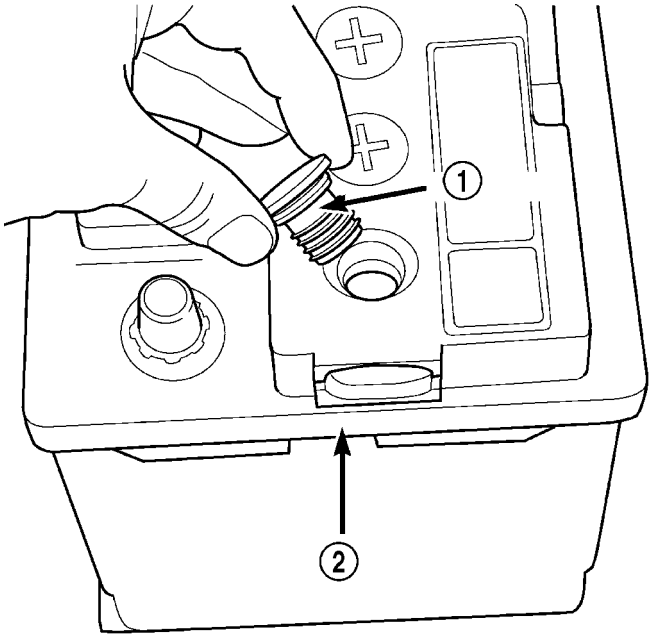

80b76fd0

Fig. 9 BATTERY CELL CAP REMOVAL/ INSTALLATION - LOW-MAINTENANCE BATTERY ONLY

1 - BATTERY CELL CAP
2 - BATTERY CASE

WARNING: NEVER PUT YOUR FACE NEAR A GASSING, HOT OR SWELLED BATTERY. SERIOUS PERSONAL INJURY MAY RESULT.

BATTERY (Continued)

(2) Wearing safety glasses, look through the battery cell cap holes to determine the level of the electrolyte in the battery. The electrolyte should be above the hooks inside the battery cells (Fig. 10).

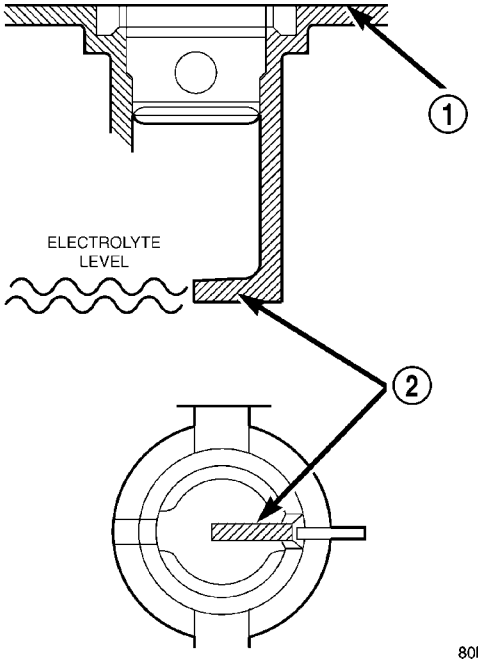

Fig. 10 HOOK INSIDE BATTERY CELLS - LOW-MAINTENANCE BATTERY ONLY

1 - TOP OF BATTERY
2 - HOOK INSIDE BATTERY CELLS

(3) **Add only distilled water** until the electrolyte is above the hooks inside the battery cells (Fig. 10).

MICRO 420 BATTERY TESTER

Always use the Micro 420 Instruction Manual that was supplied with the tester as a reference. If the Instruction Manual is not available the following procedure can be used:

WARNING: ALWAYS WEAR APPROPRIATE EYE PROTECTION AND USE EXTREME CAUTION WHEN WORKING WITH BATTERIES.

BATTERY TESTING

(1) If testing the battery OUT-OF-VEHICLE, clean the battery terminals with a wire brush before testing. If the battery is equipped with side post terminals, install and tighten the supplied lead terminal stud adapters. Do not use steel bolts. Failure to properly install the stud adapters, or using stud adapters that are dirty or worn-out may result in false test readings.

(2) If testing the battery IN-THE-VEHICLE, make certain all of the vehicle accessory loads are OFF, including the ignition. **The preferred test position is at the battery terminal**. If the battery is not accessible, you may test using both the positive and negative jumper posts. Select TESTING AT JUMPER POST when connecting to that location.

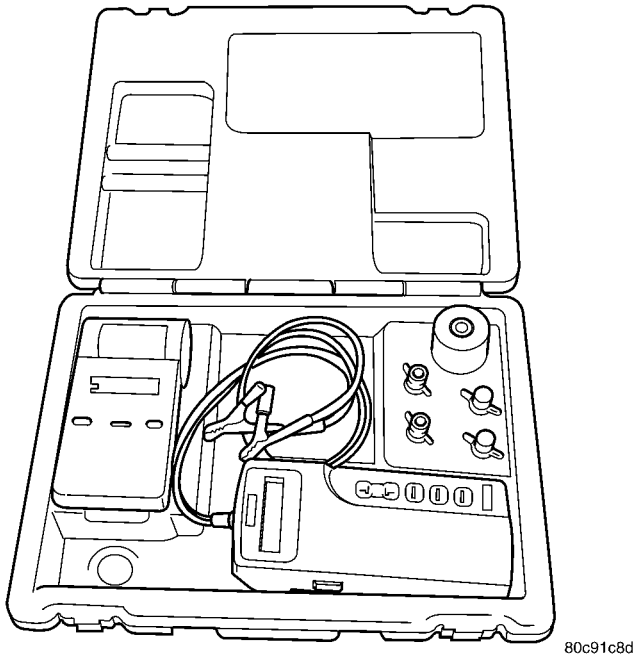

Fig. 11 Micro 420 Battery Tester

(3) Connect the tester to the battery or jumper posts, the red clamp to positive (+) and the black clamp to negative (–).

NOTE: Multiple batteries connected in parallel must have the ground cable disconnected to perform a battery test. Failure to disconnect may result in false battery test readings.

(4) Using the ARROW key select **in** or **out** of vehicle testing and press ENTER to make a selection.

(5) If not selected, choose the Cold Cranking Amp (CCA) battery rating. Or select the appropriate battery rating for your area (see menu). The tester will then run its self programmed test of the battery and display the results. Refer to the test result table noted below.

CAUTION: If REPLACE BATTERY is the result of the test, this may mean a poor connection between the vehicle's cables and battery exists. After disconnecting the vehicle's battery cables from the battery, retest the battery using the OUT-OF-VEHICLE test before replacing.

(6) While viewing the battery test result, press the CODE button and the tester will prompt you for the last 4 digits of the VIN. Use the UP/DOWN arrow buttons to scroll to the correct character; then press ENTER to select and move to the next digit. Then

BATTERY (Continued)

press the ENTER button to view the SERVICE CODE. Pressing the CODE button a second time will return you to the test results.

BATTERY TEST RESULTS	
GOOD BATTERY	Return to service
GOOD - RECHARGE	Fully charge battery and return to service
CHARGE & RETEST	Fully charge battery and retest battery
REPLACE BATTERY	Replace the battery and retest complete system
BAD-CELL REPLACE	Replace the battery and retest complete system

NOTE: The SERVICE CODE is required on every warranty claim submitted for battery replacement.

REMOVAL - BATTERY

WARNING: A SUITABLE PAIR OF HEAVY DUTY RUBBER GLOVES AND SAFETY GLASSES SHOULD BE WORN WHEN REMOVING OR SERVICING A BATTERY.

WARNING: REMOVE METALLIC JEWELRY TO AVOID INJURY BY ACCIDENTAL ARCING OF BATTERY CURRENT.

(1) Verify that the ignition switch and all accessories are OFF.
(2) Disconnect the battery cables from the battery posts, negative first (Fig. 12).
(3) Remove the battery hold down retaining nut.
(4) Remove the battery hold down bracket.
(5) Remove the battery from the vehicle.

INSTALLATION

(1) Position the battery in the battery tray.
(2) Install the battery hold down bracket and retaining nut. Torque the nut to 20 N·m (180 in. lbs.).
(3) Connect the battery cables to the battery posts, positive cable first. Torque terminal fasteners to 5 N·m (40 in. lbs.).

BATTERY HOLDDOWN

REMOVAL

All of the battery hold down hardware can be serviced without removal of the battery or the battery tray and support unit.

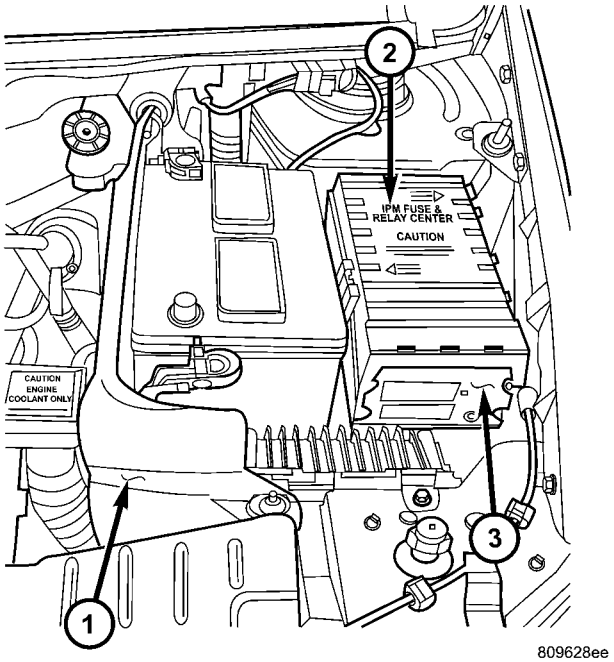

Fig. 12 BATTERY POSITION & ORIENTATION

1 - BATTERY THERMOWRAP (IF EQUIPPED)
2 - INTEGRATED POWER MODULE
3 - FRONT CONTROL MODULE

(1) Turn the ignition switch to the Off position. Be certain that all electrical accessories are turned off.
(2) Disconnect and isolate the battery negative cable.
(3) Remove the nut with washer that secures the battery hold down bracket to the battery tray and support unit.
(4) Remove the battery hold down bracket from the battery tray and support unit.

INSTALLATION

(1) Install the battery hold down bracket in the battery tray and support unit.
(2) Install the nut with washer that secures the battery hold down bracket to the battery tray and support unit. Torque to 20 N·m (180 in. lbs.).
(3) Connect the battery negative cable.

BATTERY CABLES

DESCRIPTION

The battery cables are large gauge, stranded copper wires sheathed within a heavy plastic or synthetic rubber insulating jacket. The wire used in the battery cables combines excellent flexibility and reliability with high electrical current carrying capacity.

A clamping type female battery terminal made of stamped metal is attached to one end of the battery cable wire. A square headed pinch-bolt and hex nut

BATTERY CABLES (Continued)

are installed at the open end of the female battery terminal clamp. Large eyelet type terminals are crimped onto the opposite end of the battery cable wire and then solder-dipped. The battery positive cable wires have a red insulating jacket to provide visual identification and feature a larger female battery terminal clamp to allow connection to the larger battery positive terminal post. The battery negative cable wires have a black insulating jacket and a smaller female battery terminal clamp.

The battery cables cannot be repaired and, if damaged or faulty they must be replaced. Both the battery positive and negative cables are available for service replacement only as a unit with the battery wire harness, which may include portions of the wiring circuits for the generator and other components on some vehicles. Refer to the appropriate wiring information for complete circuit schematic or connector pin-out information.

OPERATION

The battery cables connect the battery terminal posts to the vehicle electrical system. These cables also provide a path back to the battery for electrical current generated by the charging system for restoring the voltage potential of the battery. The female battery terminal clamps on the ends of the battery cable wires provide a strong and reliable connection of the battery cable to the battery terminal posts. The terminal pinch bolts allow the female terminal clamps to be tightened around the male terminal posts on the top of the battery. The eyelet terminals secured to the opposite ends of the battery cable wires from the female battery terminal clamps provide secure and reliable connection of the battery cables to the vehicle electrical system.

The battery positive cable terminal clamp is attached to the ends of two wires. One wire has an eyelet terminal that connects the battery positive cable to the B(+) terminal stud of the Integrated Power Module (IPM), and the other wire has an eyelet terminal that connects the battery positive cable to the B(+) terminal stud of the engine starter motor solenoid. The battery negative cable terminal clamp is also attached to the ends of two wires. One wire has an eyelet terminal that connects the battery negative cable to the vehicle powertrain through a stud on the left side of the engine cylinder block. The other wire has an eyelet terminal that connects the battery negative cable to the vehicle body through a ground screw on the left front fender inner shield, near the battery.

DIAGNOSIS AND TESTING

BATTERY CABLES

A voltage drop test will determine if there is excessive resistance in the battery cable terminal connections or the battery cable. If excessive resistance is found in the battery cable connections, the connection point should be disassembled, cleaned of all corrosion or foreign material, then reassembled. Following reassembly, check the voltage drop for the battery cable connection and the battery cable again to confirm repair.

When performing the voltage drop test, it is important to remember that the voltage drop is giving an indication of the resistance between the two points at which the voltmeter probes are attached. **EXAMPLE:** When testing the resistance of the battery positive cable, touch the voltmeter leads to the battery positive cable terminal clamp and to the battery positive cable eyelet terminal at the starter solenoid B(+) terminal stud. If you probe the battery positive terminal post and the battery positive cable eyelet terminal at the starter solenoid B(+) terminal stud, you are reading the combined voltage drop in the battery positive cable terminal clamp-to-terminal post connection and the battery positive cable.

VOLTAGE DROP TEST

The following operation will require a voltmeter accurate to 1/10 (0.10) volt. Before performing this test, be certain that the following procedures are accomplished:

- The battery is fully-charged and load tested. (Refer to 8 - ELECTRICAL/BATTERY SYSTEM/BATTERY - STANDARD PROCEDURE - BATTERY CHARGING) for the proper battery charging and load test procedures.
- Fully engage the parking brake.
- If the vehicle is equipped with an automatic transmission, place the gearshift selector lever in the Park position. If the vehicle is equipped with a manual transmission, place the gearshift selector lever in the Neutral position and block the clutch pedal in the fully depressed position.
- Verify that all lamps and accessories are turned off.
- To prevent the engine from starting, remove the Automatic Shut Down (ASD) relay. The ASD relay is located in the Intelligent Power Module (IPM), in the engine compartment. See the fuse and relay layout label affixed to the underside of the IPM cover for ASD relay identification and location.

BATTERY CABLES (Continued)

(1) Connect the positive lead of the voltmeter to the battery negative terminal post. Connect the negative lead of the voltmeter to the battery negative cable terminal clamp (Fig. 13). Rotate and hold the ignition switch in the Start position. Observe the voltmeter. If voltage is detected, correct the poor connection between the battery negative cable terminal clamp and the battery negative terminal post.

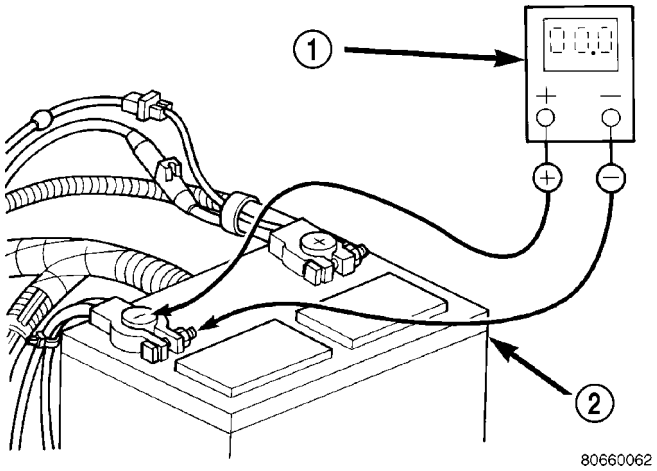

Fig. 13 Test Battery Negative Connection Resistance - Typical

1 - VOLTMETER
2 - BATTERY

(2) Connect the positive lead of the voltmeter to the battery positive terminal post. Connect the negative lead of the voltmeter to the battery positive cable terminal clamp (Fig. 14). Rotate and hold the ignition switch in the Start position. Observe the voltmeter. If voltage is detected, correct the poor connection between the battery positive cable terminal clamp and the battery positive terminal post.

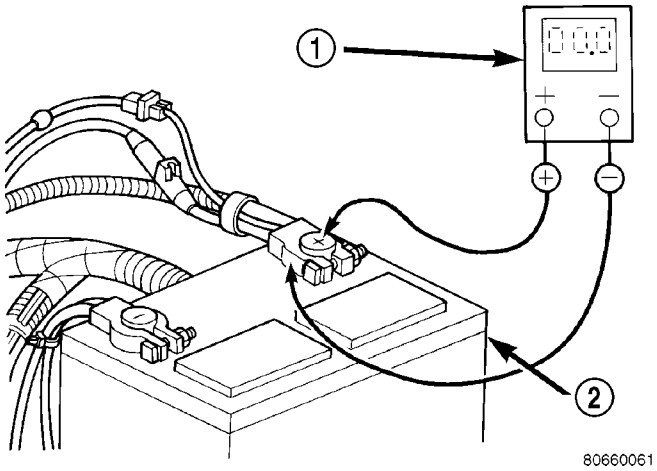

Fig. 14 Test Battery Positive Connection Resistance - Typical

1 - VOLTMETER
2 - BATTERY

(3) Connect the voltmeter to measure between the battery positive cable terminal clamp and the starter solenoid B(+) terminal stud (Fig. 15). Rotate and hold the ignition switch in the Start position. Observe the voltmeter. If the reading is above 0.2 volt, clean and tighten the battery positive cable eyelet terminal connection at the starter solenoid B(+) terminal stud. Repeat the test. If the reading is still above 0.2 volt, replace the inoperative battery positive cable.

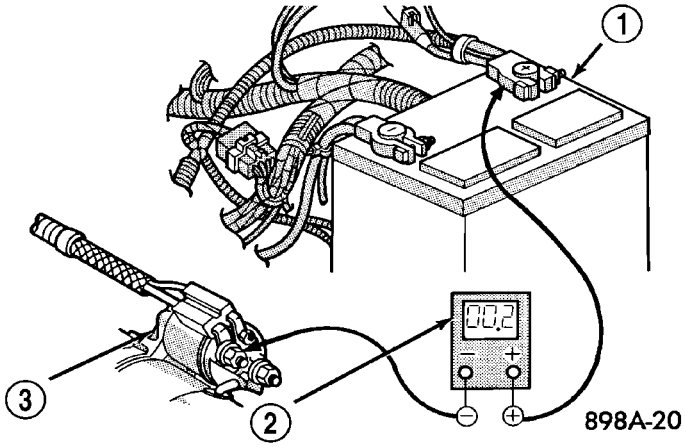

Fig. 15 Test Battery Positive Cable Resistance - Typical

1 - BATTERY
2 - VOLTMETER
3 - STARTER MOTOR

(4) Connect the voltmeter to measure between the battery negative cable terminal clamp and a good clean ground on the engine block (Fig. 16). Rotate and hold the ignition switch in the Start position. Observe the voltmeter. If the reading is above 0.2 volt, clean and tighten the battery negative cable eyelet terminal connection to the engine block. Repeat the test. If the reading is still above 0.2 volt, replace the inoperative battery negative cable.

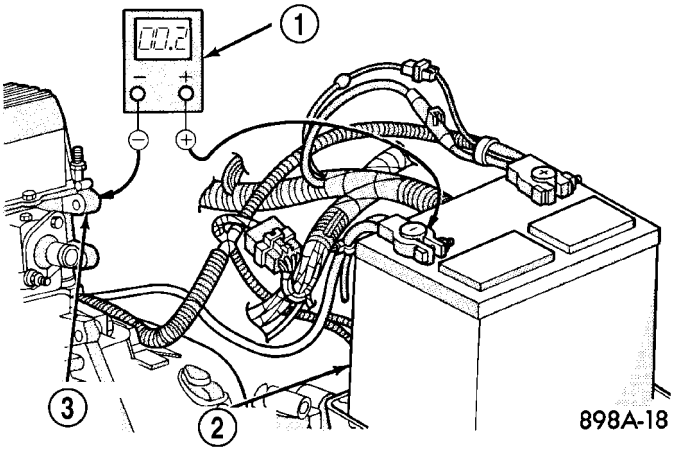

Fig. 16 Test Ground Circuit Resistance - Typical

1 - VOLTMETER
2 - BATTERY
3 - ENGINE GROUND

BATTERY CABLES (Continued)

REMOVAL

The battery cables on this vehicle may include portions of wiring circuits for the generator and other components on the vehicle. If battery cable replacement is required, it will be necessary to extract the cables out of the engine wire harness assembly. Use care not to damage the other wires and circuits which are also packaged into the engine wire harness assembly.

(1) Turn the ignition switch to the Off position. Be certain that all electrical accessories are turned off.

(2) Disconnect and isolate the battery negative cable.

(3) Remove the battery thermowrap (if equipped) from the battery tray.

(4) Remove the tape from the engine wire harness assembly, to access the desired battery cable.

(5) One at a time, trace and disconnect the battery cable retaining fasteners and routing clips until the desired cable is free from the vehicle.

(6) Feed the battery cable out of the vehicle.

INSTALLATION

(1) Position the battery cable in the vehicle.

(2) One at a time, trace and install the battery cable retaining fasteners and routing clips until the desired cable is properly installed in the engine wire harness assembly.

(3) Install the tape on the engine wire harness assembly.

(4) Install the battery thermowrap (if equipped) on the battery tray.

(5) Connect the battery negative cable.

BATTERY TRAY

DESCRIPTION

The battery is mounted in a molded plastic battery tray and support unit located in the left front corner of the engine compartment. The battery tray and support unit is secured with two nuts, one is located directly under the battery and the other is located on the right side of the tray which also serves as a coolant bottle neck retaining bolt. An additional bolt is located directly under the battery.

The battery tray and support unit also includes a engine vacuum reservoir, located in the rear of the unit (Fig. 17). And a drainage hose, located in the front of the unit (Fig. 17).

REMOVAL

(1) Disconnect and isolate the battery negative cable.

(2) Disconnect and isolate the battery positive cable.

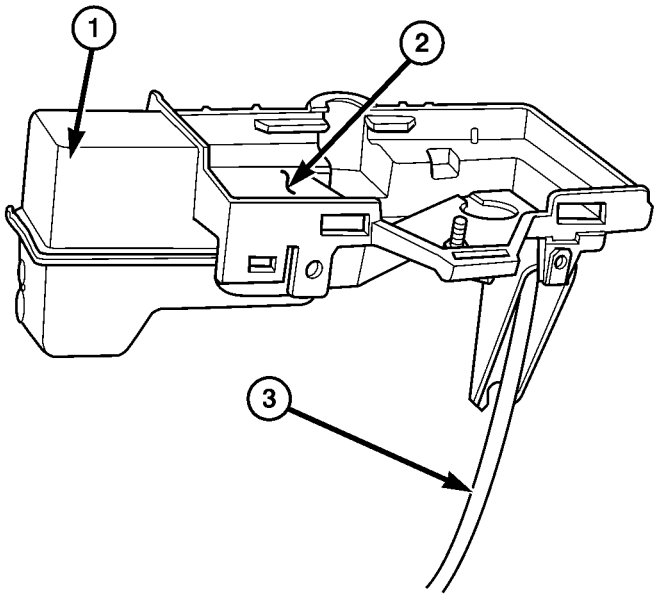

Fig. 17 RS BATTERY TRAY

1 - ENGINE VACUUM RESERVOIR
2 - BATTERY TRAY ASSEMBLY
3 - DRAINAGE HOSE

(3) Remove the battery from the vehicle. (Refer to 8 - ELECTRICAL/BATTERY SYSTEM/BATTERY - REMOVAL).

(4) Remove the battery tray retaining fasteners (Fig. 18).

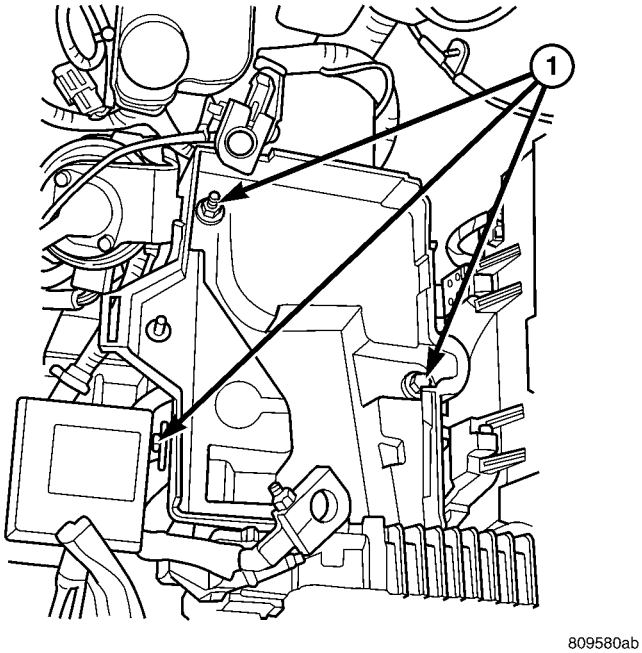

Fig. 18 BATTERY TRAY POSITION & ORIENTATION

1 - BATTERY TRAY RETAINING FASTENERS

BATTERY TRAY (Continued)

(5) Pull battery tray up far enough to disconnect the engine vacuum harness hose from the battery tray mounted, vacuum reservoir.

(6) Remove the battery tray from the vehicle.

INSTALLATION

(1) Position the battery tray in the vehicle.

(2) Connect the engine vacuum harness hose on the battery tray mounted vacuum reservoir.

(3) Position drainage hose and install the battery tray retaining fasteners (Fig. 19).

(4) Install the battery in the vehicle. (Refer to 8 - ELECTRICAL/BATTERY SYSTEM/BATTERY - INSTALLATION).

(5) Connect the battery positive cable.

(6) Connect the battery negative cable.

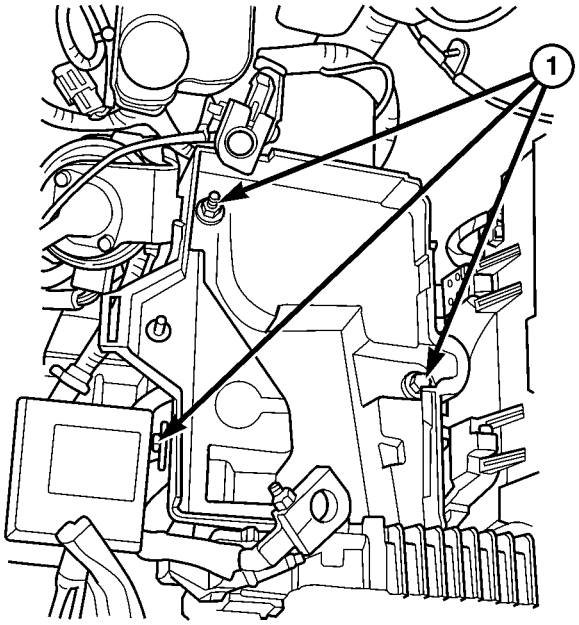

Fig. 19 BATTERY TRAY POSITION & ORIENTATION

1 - BATTERY TRAY RETAINING FASTENERS

CHARGING

TABLE OF CONTENTS

page

CHARGING
- DESCRIPTION - CHARGING SYSTEM 21
- OPERATION - CHARGING SYSTEM 21
- DIAGNOSIS AND TESTING
  - ON-BOARD DIAGNOSTIC SYSTEM 22
- SPECIFICATIONS
  - GENERATOR 23
  - TORQUE 23
  - SPECIFICATIONS - BATTERY TEMPERATURE SENSOR 23
- SPECIAL TOOLS 24

BATTERY TEMPERATURE SENSOR
- DESCRIPTION 24
- OPERATION 24
- REMOVAL 24

GENERATOR
- DESCRIPTION 24
- OPERATION 24
- REMOVAL
  - REMOVAL - 2.4L 24
  - REMOVAL - 2.5L 25
  - REMOVAL - 3.3/3.8L 27
- INSTALLATION
  - INSTALLATION - 2.4L 27
  - INSTALLATION - 2.5L 27
  - INSTALLATION - 3.3/3.8L 27

GENERATOR DECOUPLER PULLEY
- DESCRIPTION 28
- OPERATION 28
- DIAGNOSIS AND TESTING - GENERATOR DECOUPLER PULLEY 28
- REMOVAL 29
- INSTALLATION 29

VOLTAGE REGULATOR
- DESCRIPTION 30
- OPERATION 30

CHARGING

DESCRIPTION - CHARGING SYSTEM

The charging system consists of:

- Generator
- Decoupler Pulley (If equipped)
- Electronic Voltage Regulator (EVR) circuitry within the Powertrain Control Module (PCM)
- Ignition switch (refer to the Ignition System section for information)
- Battery (refer to the Battery section for information)
- Ambient Air Temperature (If equipped)
- Inlet Air Temperature (calculated battery temperature)(If equipped)
- Voltmeter (refer to the Instrument Cluster section for information if equipped)
- Wiring harness and connections (refer to the Wiring section for information)
- Accessory drive belt (refer to the Cooling section for more information)
- Battery Temperature sensor (if equipped)

OPERATION - CHARGING SYSTEM

The charging system is turned on and off with the ignition switch. The system is on when the engine is running and the ASD relay is energized. The ASD relay is energized when the PCM grounds the ASD control circuit. This voltage is connected through the PCM or IPM (intelligent power module) (if equipped) and supplied to one of the generator field terminals (Gen. Source +) at the back of the generator.

The generator is driven by the engine through a serpentine belt and pulley or decoupler pulley arrangement.

The amount of DC current produced by the generator is controlled by the EVR (field control) circuitry contained within the PCM. This circuitry is connected in series with the second rotor field terminal and ground.

An Ambient air temperature sensor is used to calculate the temperature near the battery. This temperature data, along with data from monitored line voltage (battery voltage sense circuit), is used by the PCM to vary the battery charging rate. This is done by cycling the ground path to control the strength of the rotor magnetic field. The PCM then compensates and regulates generator current output accordingly to maintain system voltage at the targeted system voltage based on battery temperature.

All vehicles are equipped with On-Board Diagnostics (OBD). All OBD-sensed systems, including EVR (field control) circuitry, are monitored by the PCM. Each monitored circuit is assigned a Diagnostic Trouble Code (DTC). The PCM will store a DTC in electronic memory for certain failures it detects and illuminate the (MIL) lamp. Refer to On-Board Diagnostics in the Electronic Control Modules(Refer to 8 - ELECTRICAL/ELECTRONIC CONTROL MOD-

CHARGING (Continued)

ULES/POWERTRAIN CONTROL MODULE - DESCRIPTION) section for more DTC information.

The Charging system "Battery" light indicates problems with the charging system (voltage too high/low, generator failure, etc.). If an extreme condition is indicated, the lamp will be illuminated. The signal to activate the lamp is sent via the PCI bus circuits. The lamp is located on the instrument panel. Refer to the Instrument Cluster section for additional information.

The PCM uses the ambient air temperature sensor to control the charge system voltage. This temperature, along with data from monitored line voltage, is used by the PCM to vary the battery charging rate. The system voltage is higher at cold temperatures and is gradually reduced as the calculated battery temperature increases.

The ambient temperature sensor is used to control the battery voltage based upon ambient temperature (approximation of battery temperature). The PCM maintains the optimal output of the generator by monitoring battery voltage and controlling it to a range of 13.5 - 14.7 volts based on battery temperature.

DIAGNOSIS AND TESTING

ON-BOARD DIAGNOSTIC SYSTEM

The Powertrain Control Module (PCM) monitors critical input and output circuits of the charging system, making sure they are operational. A Diagnostic Trouble Code (DTC) is assigned to each input and output circuit monitored by the OBD system. Some circuits are checked continuously and some are checked only under certain conditions.

If the OBD system senses that a monitored circuit is bad, it will put a DTC into electronic memory. The DTC will stay in electronic memory as long as the circuit continues to be bad. The PCM is programmed to clear the memory after 40 good trip if the problem does not occur again.

DIAGNOSTIC TROUBLE CODES

A DTC description can be read using the DRBIII® scan tool. Refer to the appropriate Powertrain Diagnostic Procedures manual for information.

A DTC does not identify which component in a circuit is bad. Thus, a DTC should be treated as a symptom, not as the cause for the problem. In some cases, because of the design of the diagnostic test procedure, a DTC can be the reason for another DTC to be set. Therefore, it is important that the test procedures be followed in sequence, to understand what caused a DTC to be set.

ERASING DIAGNOSTIC TROUBLE CODES

The DRBIII® Scan Tool must be used to erase a DTC.

The following procedures may be used to diagnose the charging system if:

- the check gauges lamp or battery lamp is illuminated with the engine running
- the voltmeter (if equipped) does not register properly
- an undercharged or overcharged battery condition occurs.

Remember that an undercharged battery is often caused by:

- accessories being left on with the engine not running
- a faulty or improperly adjusted switch that allows a lamp to stay on. Refer to Ignition-Off Draw Test (Refer to 8 - ELECTRICAL/BATTERY SYSTEM/BATTERY - STANDARD PROCEDURE)
- loose generator belt.

INSPECTION

The Powertrain Control Module (PCM) monitors critical input and output circuits of the charging system, making sure they are operational. A Diagnostic Trouble Code (DTC) is assigned to each input and output circuit monitored by the On-Board Diagnostic (OBD) system. Some charging system circuits are checked continuously, and some are checked only under certain conditions.

Refer to Diagnostic Trouble Codes in; Powertrain Diagnostic manual for more DTC information. This will include a complete list of DTC's including DTC's for the charging system.

To perform a complete test of the charging system, refer to the appropriate Powertrain Diagnostic Procedures service manual and the DRBIII® scan tool. Perform the following inspections before attaching the scan tool.

(1) Inspect the battery condition. Refer to the Battery section (Refer to 8 - ELECTRICAL/BATTERY SYSTEM - DIAGNOSIS AND TESTING) for procedures.

(2) Inspect condition of battery cable terminals, battery posts, connections at engine block, starter solenoid and relay. They should be clean and tight. Repair as required.

(3) Inspect all fuses in both the fuseblock and Power Distribution Center (PDC) or IPM (if equipped) for tightness in receptacles. They should be properly installed and tight. Repair or replace as required.

(4) Inspect generator mounting bolts for tightness. Replace or tighten bolts if required. Refer to the Generator Removal/Installation section of this group for

CHARGING (Continued)

torque specifications (Refer to 8 - ELECTRICAL/ CHARGING - SPECIFICATIONS).

(5) Inspect generator drive belt condition and tension. Tighten or replace belt as required. Refer to Belt Tension Specifications(Refer to 7 - COOLING/ ACCESSORY DRIVE - SPECIFICATIONS).

(6) Inspect decoupler pulley (if equipped). Ensure decoupler pulley is driving the alternator rotor.

(7) Inspect automatic belt tensioner (if equipped). Refer to the Cooling System for more information.

(8) Inspect generator electrical connections at generator field, battery output, and ground terminal (if equipped). Also check generator ground wire connection at engine (if equipped). They should all be clean and tight. Repair as required.

SPECIFICATIONS

GENERATOR

Type	Engine	Minimun Test Amperage
Denso	2.4 L	80 Amp (HOT)
Denso	3.3/3.8L	100 Amp or 115 Amp (HOT)
Test Specification:		

Type	Engine	Minimun Test Amperage
1. Engine RPM : 2500 RPM ±20 RPM (HOT)		
2. Voltage Output : 14.0 V ± 0.5 V		
3. Field Current : 5 amps ± 0.1 amps		

Part number is located on the side of the generator.

TORQUE

DESCRIPTION	N·m	Ft. Lbs.	In. Lbs.
Battery Hold Down Clamp Bolt	20	14.7	180
Generator B+ Nut	12.4	9.2	110
Battery Terminal Nut	4		35
Generator Mounting Bolt 2.4L	28.2	20.8	250
Generator Mounting Bolts 3.3/3.8L	54.2	40	
Starter Solenoid Battery Nut 3.3/3.8L	11.3	8.3	100
Generator Decoupler	109.8	81	

SPECIFICATIONS - BATTERY TEMPERATURE SENSOR

°C	°F	K-Ohms Min.	K-Ohms Max.
(40)	(40)	291.4	381.7
(20)	(4)	85.8	108.4
20	68	11.4	13.6
25	77	9.1	10.9
120	248	0.37	0.41
130	266	0.28	0.32

CHARGING (Continued)

SPECIAL TOOLS

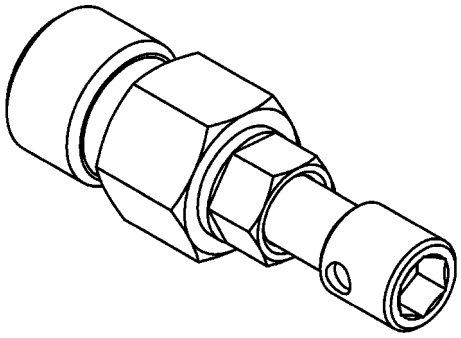

GENERATOR DECOUPLER 8433

BATTERY TEMPERATURE SENSOR

DESCRIPTION

(NGC Vehicles) The PCM incorporates a Battery Temperature Sensor (BTS) on its circuit board.

OPERATION

The PCM uses the temperature of the battery area to control the charge system voltage. This temperature, along with data from monitored line voltage, is used by the PCM to vary the battery charging rate. The system voltage is higher at cold temperatures and is gradually reduced as temperature around the battery increases.

For vehicles with 1.6L engine, there is no physical battery temp sensor in place to detect battery temp. Rather, an algorithm buit in PCM is employed to predict battery temp using inlet air temp, vehicle speed, and coolant temp, among other signals. The PCM maintains the optimal output of the generator by monitoring battery voltage and controlling it to a range of 13.5 - 14.7 volts based on battery temperature. The system target voltage is 13.5 – 14.7 volts. However the actual voltage go below this during heavy electrical loads and generator speeds. Also the actual voltage can be lower than the target voltage between the battery and the battery voltage sense circuit, approximately 0.2 — 0.3 volts.

The battery temperature sensor is also used for OBD II diagnostics. Certain faults and OBD II monitors are either enabled or disabled depending upon the battery temperature sensor input (example: disable purge and EGR, enable LDP). Most OBD II monitors are disabled below 20°F.

REMOVAL

The battery temperature sensor is not serviced separately. If replacement is necessary, the PCM must be replaced.

GENERATOR

DESCRIPTION

The generator is belt-driven by the engine. The generator produces DC voltage at the B+ terminal. If the generator is failed, the generator assembly subcomponents (generator and decoupler pulley) must be inspected for individual failure and replaced accordingly.

OPERATION

As the energized rotor begins to rotate within the generator, the spinning magnetic field induces a current into the windings of the stator coil. Once the generator begins producing sufficient current, it also provides the current needed to energize the rotor.

The Y type stator winding connections deliver the induced AC current to 3 positive and 3 negative diodes for rectification. From the diodes, rectified DC current is delivered to the vehicles electrical system through the generator, battery, and ground terminals.

Excessive or abnormal noise emitting from the generator may be caused by:

- Worn, loose or defective bearings
- Loose or defective drive pulley (2.4L) or decoupler (3.3/3.8L)
- Incorrect, worn, damaged or misadjusted drive belt
- Loose mounting bolts
- Misaligned drive pulley
- Defective stator or diode
- Damaged internal fins

REMOVAL

REMOVAL - 2.4L

(1) Release hood latch and open hood.
(2) Disconnect battery negative cable.
(3) Disconnect the Inlet Air Temperature sensor.
(4) Remove the Air Box, refer to the Engine/Air Cleaner for more information.
(5) Remove the EVAP Purge solenoid from its bracket and reposition.
(6) Disconnect the push-in field wire connector from back of generator.
(7) Remove nut holding B+ wire terminal to back of generator.
(8) Separate B+ terminal from generator.

GENERATOR (Continued)

(9) Remove accessory drive belt, refer to the Cooling System section for proper procedures.
(10) Remove the generator.

REMOVAL - 2.5L

(1) Disconnect the negative battery cable (Fig. 1).

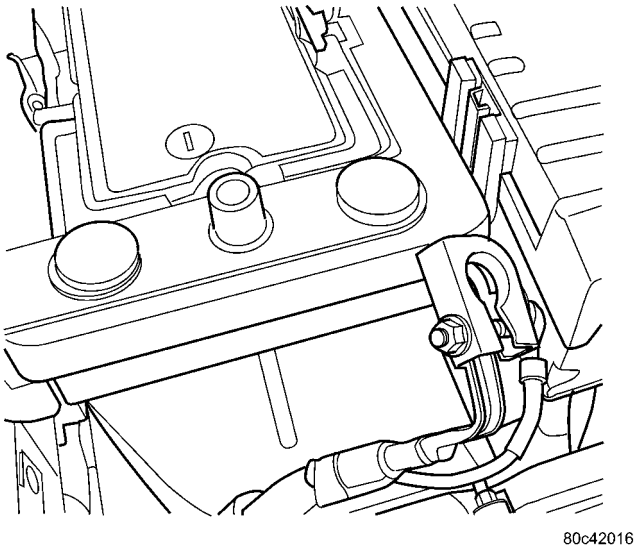

Fig. 1 BATTERY CONNECTION

(2) Remove the engine cover (Fig. 2).

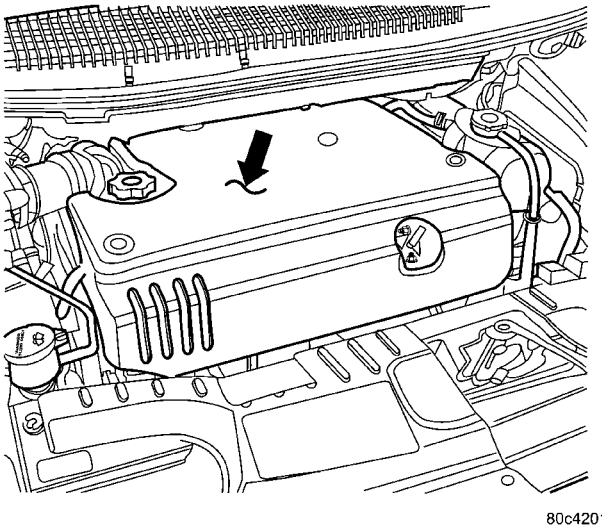

Fig. 2 ENGINE COVER

(3) Raise vehicle and support.
(4) Turn wheels to the right. Remove the right front splash shield (Fig. 3).

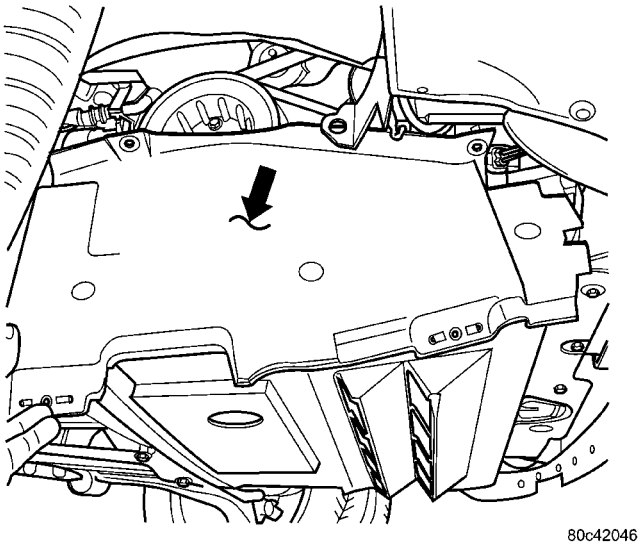

Fig. 3 SPLASH SHIELD

(5) Remove the generator drive belt (Fig. 4).

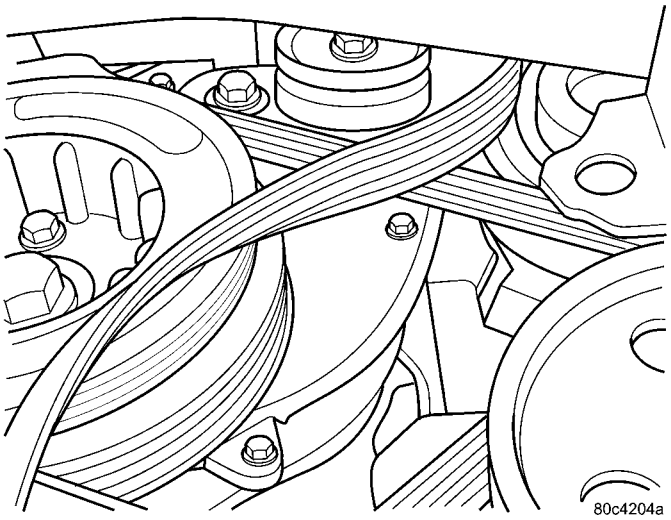

Fig. 4 GENERATOR BELT

GENERATOR (Continued)

(6) Lower vehicle.

(7) Disconnect the generator battery connection (Fig. 5).

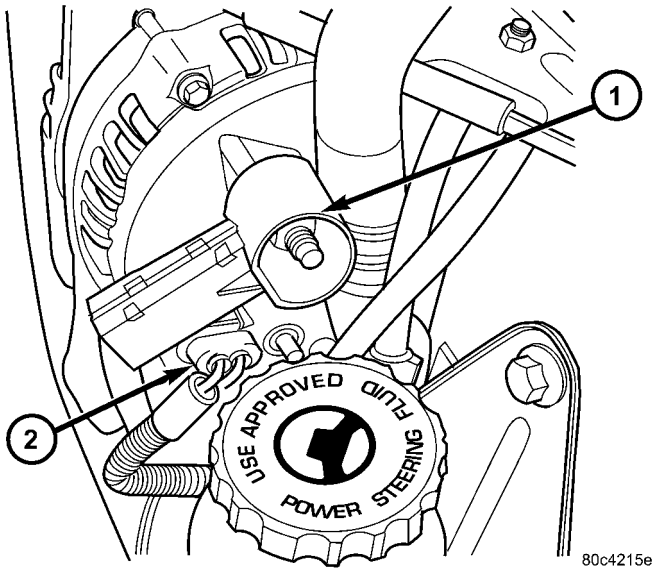

Fig. 5 GENERATOR CONNECTIONS

1 - Battery Connection
2 - Field Connection

(8) Disconnect the field connection (Fig. 5).

(9) Relocate the wiring harness on upper generator bracket (Fig. 6).

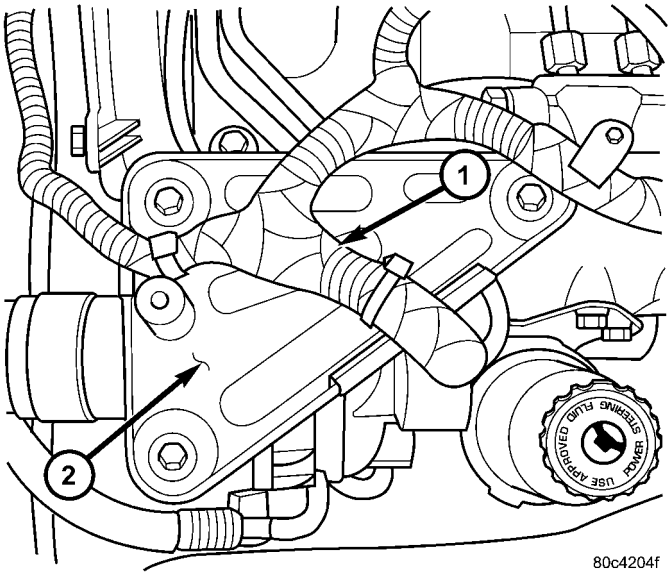

Fig. 6 UPPER SUPPORT BRACKET

1 - Wiring Harness
2 - Upper Bracket

(10) Remove the Air Cleaner Box (Fig. 7).

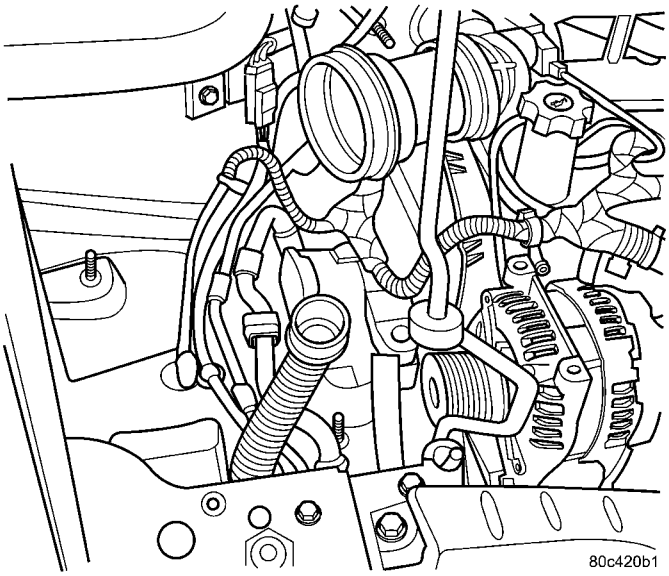

Fig. 7 AIR BOX REMOVED

(11) Remove the 2 lower mounting Bolts (Fig. 8).

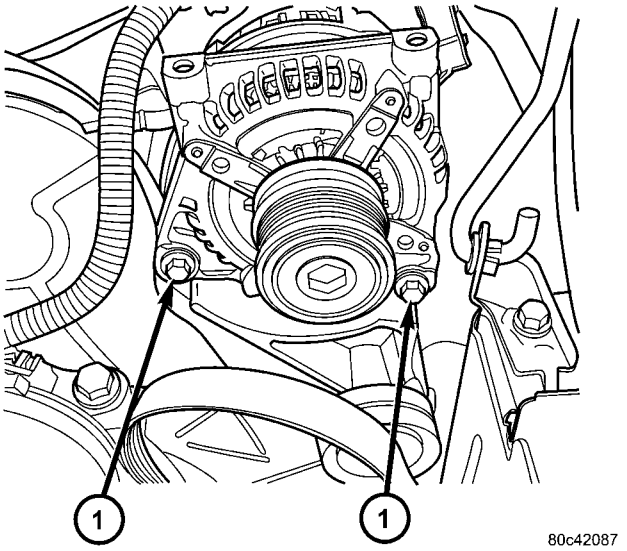

Fig. 8 GENERATOR LOWER BOLTS

1 - Lower Mounting Bolts

(12) Remove generator.

GENERATOR (Continued)

REMOVAL - 3.3/3.8L

(1) Release hood latch and open hood.
(2) Disconnect battery negative cable.
(3) Disconnect the push-in field wire connector from back of generator.
(4) Remove nut holding B+ wire terminal to back of generator.
(5) Separate B+ terminal from generator.
(6) Raise vehicle and support.
(7) Remove the right front lower splash shield.
(8) Remove accessory drive belt, refer to the Cooling System section for proper procedures.
(9) Remove the lower oil dip stick tube bolt (Fig. 9).
(10) Remove wiring harness from the oil dip stick tube

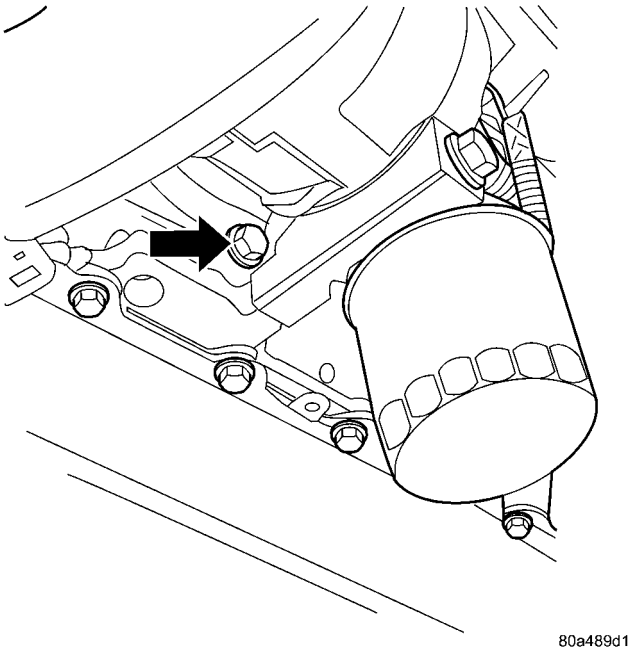

Fig. 9 DIP STICK LOWER BOLT

(11) Remove the 3 mounting bolts.
(12) Lower vehicle.
(13) Remove oil dip stick tube from vehicle.
(14) Roll and remove the generator from vehicle (Fig. 10).

INSTALLATION

INSTALLATION - 2.4L

(1) Install the generator.
(2) Install the accessory drive belt, refer to the Cooling System section for proper procedures.
(3) Connect B+ terminal to generator.
(4) Install nut holding B+ wire terminal to back of generator.
(5) Connect the push-in field wire connector to back of generator.
(6) Install the EVAP Purge solenoid to its bracket.

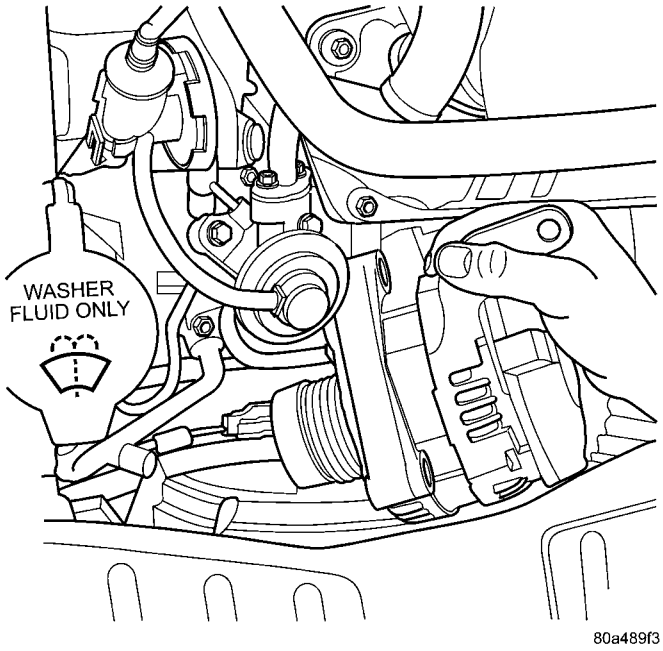

Fig. 10 GENERATOR 3.3/3.8L

(7) Install the Air Box, refer to the Engine/Air Cleaner for more information.
(8) Connect the Inlet Air Temperature sensor.
(9) Connect battery negative cable.

INSTALLATION - 2.5L

(1) Install generator.
(2) Install the 2 lower mounting Bolts (Fig. 8).
(3) Install the Air Cleaner Box (Fig. 7).
(4) Install the upper support bracket (Fig. 6).
(5) Install the wiring harness on upper generator bracket (Fig. 6).
(6) Connect the field connection (Fig. 5).
(7) Connect the generator battery connection (Fig. 5).
(8) Raise vehicle and support.
(9) Install the generator drive belt (Fig. 4).
(10) Install the right front splash shield (Fig. 3).
(11) Lower vehicle.
(12) Install the engine cover (Fig. 2).
(13) Connect the negative battery cable (Fig. 1).

INSTALLATION - 3.3/3.8L

(1) Roll and place generator in position on vehicle (Fig. 10).
(2) Install upper bolts to hold generator in place.
(3) Lubricate the o-ring. Install oil dip stick tube.
(4) Install the upper oil dip stick tube bolt.
(5) Place B+ terminal in position on generator.
(6) Install nut to hold B+ wire terminal to back of generator.
(7) Connect the push-in field wire connector into back of generator.

GENERATOR (Continued)

(8) Raise vehicle and support.
(9) Install the lower mounting bolt and tighten.
(10) Install the lower oil dip stick tube bolt and tighten (Fig. 9).
(11) Install accessory drive belt, refer to the Cooling System section for proper procedures.
(12) Install the right front lower splash shield.
(13) Lower vehicle.
(14) Install wiring harness to the oil dip stick tube
(15) Connect battery negative cable.
(16) Verify generator output rate.

GENERATOR DECOUPLER PULLEY

DESCRIPTION

The Generator Decoupler is a one way clutch (Fig. 11). It is attached to the generator and replaces the standard pulley. It is a non-serviceable item and is to be replaced as an assembly. It is a dry operation (no grease or lubricants). The operation of it is not temperature sensitive and has a low sensitivity to electrical load.

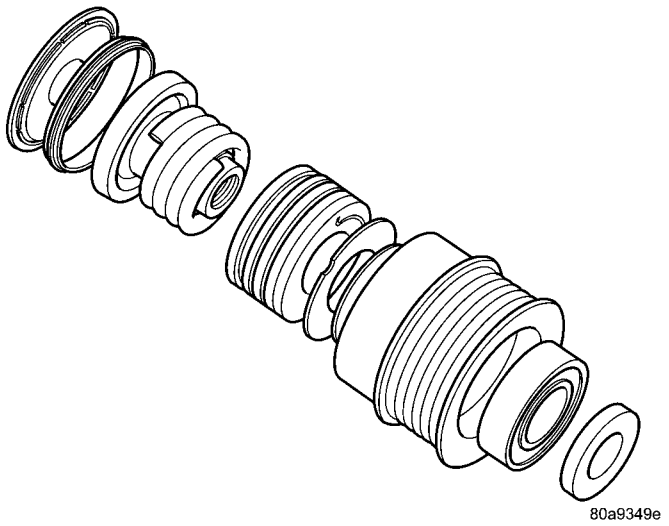

Fig. 11 GENERATOR DECOUPLER 3.3/3.8L

OPERATION

The generator decoupler is a one way clutch and should be replaced as an assembly. It is designed to help reduce belt tension fluctuation, reduce fatigue loads, improve belt life, reduce hubloads on components, and reduce noise.

DIAGNOSIS AND TESTING - GENERATOR DECOUPLER PULLEY

CONDITION	VERIFICATION PROCEDURE	POSSIBLE CAUSES	CORRECTION
Does not drive generator (Generator not Charging)	1. Start engine and allow engine to idle. 2.Verify generator pulley is rotating. 3. View generator internal fins thru generator housing. 4. Fins either do not rotate or rotate very erratic. 5. Rotate decoupler pulley in clockwise direction then quickly rotate in counterclockwise direction to see if clutch engages.	Clutch failure	Replace Decoupler
Noise from generator at engine shut down.	1. Start engine and allow engine to idle. 2. Shutdown engine and listen to generator. 3. Noise heard just as engine stops. Sounds like a click. 4. Remove accessory drive belt. 5. Verify rotation in counterclock wise direction is rough.	Defective decoupler pulley bearing.	Replace decoupler pulley.

GENERATOR DECOUPLER PULLEY (Continued)

REMOVAL

(1) Release hood latch and open hood.
(2) Disconnect battery negative cable.
(3) Raise vehicle and support.
(4) Remove the right front lower splash shield.
(5) Remove accessory drive belt, refer to the Cooling System section for proper procedures (Fig. 12).

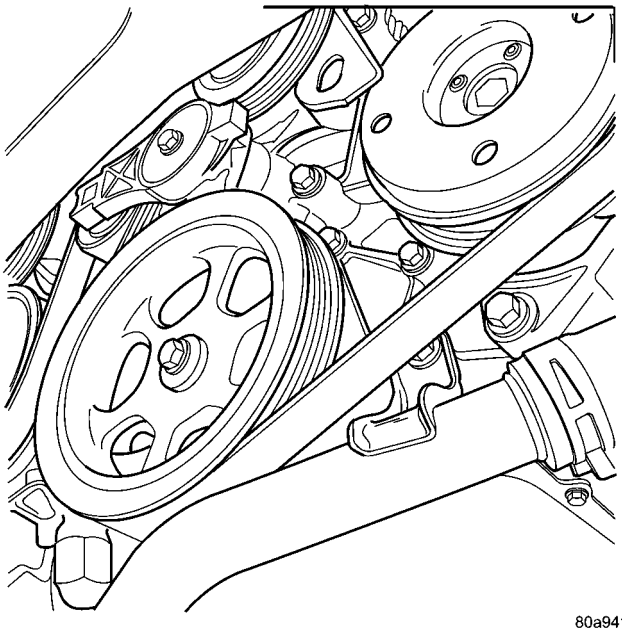

Fig. 12 DRIVE BELT 3.3/3.8L

(6) Lower vehicle.
(7) Remove the Air Box, refer to the Engine section for more information.
(8) Remove the decoupler pulley cover.
(9) Use Special Tool #8433 (Fig. 14) to loosen the Generator Decoupler (Fig. 13).
(10) Remove the tool.
(11) Remove the Generator Decoupler.

INSTALLATION

(1) Install the Generator Decoupler to the generator shaft.
(2) Use Special Tool #8433 (Fig. 14) to tighten the Generator Decoupler (Fig. 15). Refer to the torque chart for the proper torque.
(3) Install a new decoupler pulley cover.
(4) Install the Air Box, refer to the Engine section for more information.
(5) Raise vehicle and support.
(6) Install accessory drive belt, refer to the Cooling System section for proper procedures (Fig. 12).

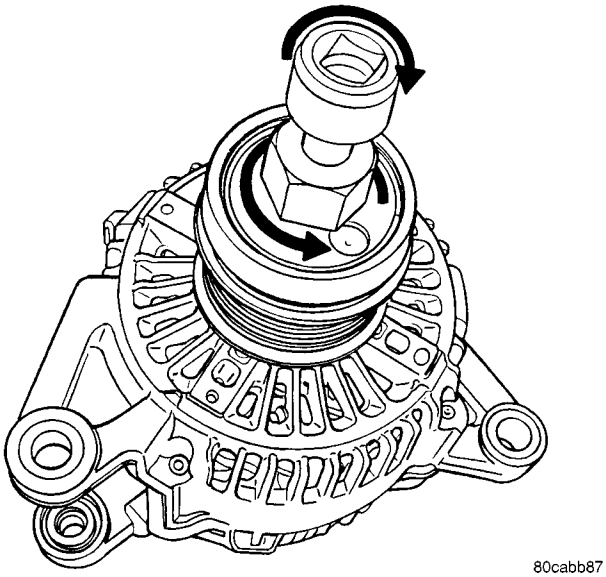

Fig. 13 DECOUPLER REMOVAL (LITENS)

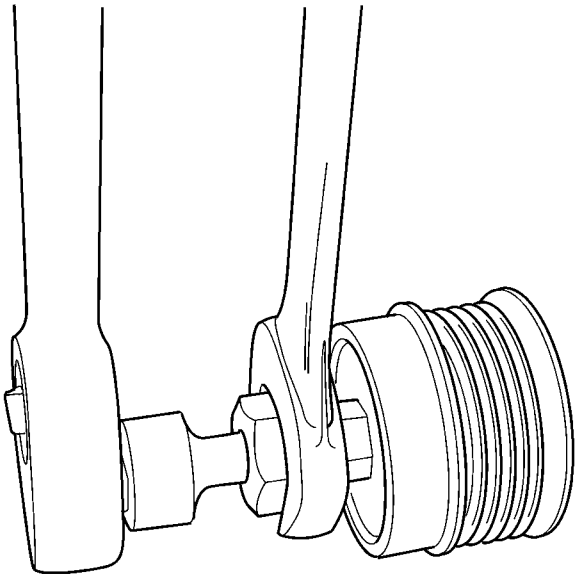

Fig. 14 SPECIAL TOOL 8433 AND DECOUPLER

GENERATOR DECOUPLER PULLEY (Continued)

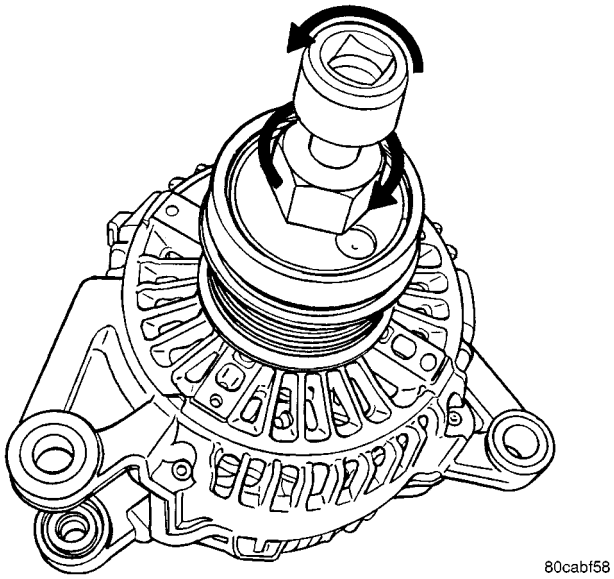

Fig. 15 DECOUPLER INSTALLATION (Litens)

(7) Install the right front lower splash shield.
(8) Lower vehicle.
(9) Connect battery negative cable.

VOLTAGE REGULATOR

DESCRIPTION

The Electronic Voltage Regulator (EVR) is not a separate component. It is actually a voltage regulating circuit located within the Powertrain Control Module (PCM). The EVR is not serviced separately. If replacement is necessary, the PCM must be replaced.

OPERATION

The amount of DC current produced by the generator is controlled by EVR circuitry contained within the PCM. This circuitry is connected in series with the generators second rotor field terminal and its ground.

Voltage is regulated within the PCM on the NGC vehicles, to control the strength of the rotor magnetic field. The EVR circuitry monitors system line voltage at the PDC and calculated battery temperature or inlet air temperature sensor (refer to Inlet Air Temperature Sensor, if equipped, for more information). It then determines a target charging voltage. If sensed battery voltage is lower than the target voltage, the PCM feeds the field winding until sensed battery voltage is at the target voltage. A circuit in the PCM cycles the feed side of the generator field at 250 times per second (250Hz), but has the capability to feed the field control wire 100% of the time (full field) to achieve the target voltage. If the charging rate cannot be monitored (limp-in), a duty cycle of 20% is used by the PCM in order to have some generator output. Also refer to Charging System Operation for additional information.

STARTING

TABLE OF CONTENTS

page

STARTING
DESCRIPTION 31
OPERATION 31
DIAGNOSIS AND TESTING
DIAGNOSIS AND TESTING - STARTING SYSTEM TEST 31
DIAGNOSIS AND TESTING - CONTROL CIRCUIT TEST 33
DIAGNOSIS AND TESTING - FEED CIRCUIT RESISTANCE TEST 35
DIAGNOSIS AND TESTING - FEED CIRCUIT TEST 36
SPECIFICATIONS
Torques 36
STARTER 37
STARTER MOTOR
REMOVAL
REMOVAL - 2.4L 37
REMOVAL - 3.3/3.8L 38
REMOVAL - 2.5L 38
INSTALLATION
INSTALLATION - 2.4L 39
INSTALLATION - 3.3/3.8L 39
INSTALLATION - 2.5L 39

STARTING

DESCRIPTION

The starting system consists of:

- Starter relay
- Starter motor (including an integral starter solenoid)

Other components to be considered as part of starting system are:

- Battery
- Battery cables
- Ignition switch and key lock cylinder
- Clutch pedal position switch (manual transmission)
- Park/neutral position switch (automatic transmission)
- Wire harnesses and connections.

The Battery, Starting, and Charging systems operate in conjunction with one another, and must be tested as a complete system. For correct operation of starting/charging systems, all components used in these 3 systems must perform within specifications. When attempting to diagnose any of these systems, it is important that you keep their interdependency in mind.

The diagnostic procedures used in each of these groups include the most basic conventional diagnostic methods, to the more sophisticated On-Board Diagnostics (OBD) built into the Powertrain Control Module (PCM). Use of an induction-type milliampere ammeter, volt/ohmmeter, battery charger, carbon pile rheostat (load tester), and 12-volt test lamp may be required.

OPERATION

These components form two separate circuits. A high amperage circuit that feeds the starter motor up to 300+ amps, and a control circuit that operates on less than 20 amps.

The PCM controls a double start over-ride safety that does not allow the starter to be engaged if the engine is already running.

DIAGNOSIS AND TESTING

DIAGNOSIS AND TESTING - STARTING SYSTEM TEST

For circuit descriptions and diagrams, refer to the Wiring Diagrams.

WARNING: ON VEHICLES EQUIPPED WITH AIRBAGS, REFER TO THE PASSIVE RESTRAINT SYSTEMS BEFORE ATTEMPTING STEERING WHEEL, STEERING COLUMN, OR INSTRUMENT PANEL COMPONENT DIAGNOSIS OR SERVICE. FAILURE TO TAKE THE PROPER PRECAUTIONS COULD RESULT IN ACCIDENTAL AIRBAG DEPLOYMENT AND POSSIBLE PERSONAL INJURY.

INSPECTION

Before removing any unit from the starting system for repair or diagnosis, perform the following inspections:

- **Battery** - Visually inspect the battery for indications of physical damage and loose or corroded cable connections. Determine the state-of-charge and cranking capacity of the battery. Charge or replace

STARTING (Continued)

the battery, if required. Refer to the Battery section for more information.

- **Ignition Switch** - Visually inspect the ignition switch for indications of physical damage and loose or corroded wire harness connections.
- **Transmission Range Sensor or Park/Neutral Switch** - Visually inspect the transmission range sensor for indications of physical damage and loose or corroded wire harness connections.
- **Starter Relay** - Visually inspect the starter relay for indications of physical damage and loose or corroded wire harness connections.
- **Starter Motor** - Visually inspect the starter motor for indications of physical damage and loose or corroded wire harness connections.
- **Starter Solenoid** - Visually inspect the starter solenoid for indications of physical damage and loose or corroded wire harness connections.
- **Wiring** - Visually inspect the wire harness for damage. Repair or replace any faulty wiring, as required. Check for loose or corroded wire harness connections at main engine ground and remote jump post.
- **Power Distribution Center (PDC)** - Visually inspect the B+ connections at the PDC for physical damage and loose or corroded harness connections.

STARTING SYSTEM DIAGNOSIS

CONDITION	POSSIBLE CAUSE	CORRECTION
STARTER FAILS TO ENGAGE.	1. BATTERY DISCHARGED OR FAULTY.	1. REFER TO THE BATTERY SECTION FOR MORE INFORMATION. CHARGE OR REPLACE BATTERY, IF REQUIRED.
	2. STARTING CIRCUIT WIRING FAULTY.	2. REFER TO FEED CIRCUIT RESISTANCE TEST AND FEED CIRCUIT TEST IN THIS SECTION.
	3. STARTER RELAY FAULTY.	3. REFER TO RELAY TEST, IN THIS SECTION. REPLACE RELAY, IF NECESSARY.
	4. IGNITION SWITCH FAULTY.	4. REFER TO IGNITION SWITCH TEST, IN THE STEERING SECTION OR 8 WIRING DIAGRAMS. REPLACE SWITCH, IF NECESSARY.
	5. PARK/NEUTRAL POSITION SWITCH (AUTO TRANS) FAULTY OR MIS-ADJUSTED.	5. REFER PARK/NEUTRAL POSITION SWITCH TEST, IN THE TRANSAXLE. SECTION FOR MORE INFORMATION. REPLACE SWITCH, IF NECESSARY.
	6. CLUTCH INTERLOCK SWITCH (MAN TRANS) FAULTY.	6. REFER TO CLUTCH PEDAL POSITION SWITCH TEST, IN THE CLUTCH. SECTION. REPLACE SWITCH, IF NECESSARY.
	7. STARTER SOLENOID FAULTY.	7. REFER TO SOLENOID TEST, IN THIS SECTION. REPLACE STARTER ASSEMBLY, IF NECESSARY.
	8. STARTER ASSEMBLY FAULTY.	8. IF ALL OTHER STARTING SYSTEM COMPONENTS AND CIRCUITS CHECK OK, REPLACE STARTER ASSEMBLY.
	9. FAULTY TEETH ON RING GEAR.	9. ROTATE FLYWHEEL 360°, AND INSPECT TEETH AND RING GEAR REPLACED IF DAMAGED.
	10. PCM DOUBLE START OVERRIDE OUTPUT FAILURE.	10. REFER TO PCM DIAGNOSTIC. CHECK FOR CONTINUITY BETWEEN PCM AND TERMINAL 85. REPAIR OPEN CIRCUIT AS REQUIRED. IF OK, PCM MAY BE DEFECTIVE.
STARTER ENGAGES, FAILS TO TURN ENGINE.	1. BATTERY DISCHARGED OR FAULTY.	1. REFER TO THE BATTERY SECTION FOR MORE INFORMATION. CHARGE OR REPLACE BATTERY AS NECESSARY.

STARTING (Continued)

CONDITION	POSSIBLE CAUSE	CORRECTION
	2. STARTING CIRCUIT WIRING FAULTY.	2. REFER TO THE FEED CIRCUIT RESISTANCE TEST AND THE FEED CIRCUIT TEST IN THIS SECTION. REPAIR AS NECESSARY.
	3. STARTER ASSEMBLY FAULTY.	3. IF ALL OTHER STARTING SYSTEM COMPONENTS AND CIRCUITS CHECK OK, REPLACE STARTER ASSEMBLY.
	4. ENGINE SEIZED.	4. REFER TO THE ENGINE SECTION, FOR DIAGNOSTIC AND SERVICE PROCEDURES.
	5. LOOSE CONNECTION AT BATTERY, PDC, STARTER, OR ENGINE GROUND.	5. INSPECT FOR LOOSE CONNECTIONS.
	6. FAULTY TEETH ON RING GEAR.	6. ROTATE FLYWHEEL 360°, AND INSPECT TEETH AND RING GEAR REPLACED IF DAMAGED.
STARTER ENGAGES, SPINS OUT BEFORE ENGINE STARTS.	1. BROKEN TEETH ON STARTER RING GEAR.	1. REMOVE STARTER. INSPECT RING GEAR AND REPLACE IF NECESSARY.
	2. STARTER ASSEMBLY FAULTY.	2. IF ALL OTHER STARTING SYSTEM COMPONENTS AND CIRCUITS CHECK OK, REPLACE STARTER ASSEMBLY.
STARTER DOES NOT DISENGAGE.	1. STARTER IMPROPERLY INSTALLED.	1. INSTALL STARTER. TIGHTEN STARTER MOUNTING HARDWARE TO CORRECT TORQUE SPECIFICATIONS.
	2. STARTER RELAY FAULTY.	2. REFER TO RELAY TEST, IN THIS SECTION. REPLACE RELAY, IF NECESSARY.
	3. IGNITION SWITCH FAULTY.	3. REFER TO IGNITION SWITCH TEST, IN THE STEERING SECTION. REPLACE SWITCH, IF NECESSARY.
	4. STARTER ASSEMBLY FAULTY.	4. IF ALL OTHER STARTING SYSTEM COMPONENTS AND CIRCUITS CHECK OK, REPLACE STARTER ASSEMBLY.
	5. FAULTY TEETH ON RING GEAR.	5. ROTATE FLYWHEEL 360°, AND INSPECT TEETH AND RING GEAR REPLACED IF DAMAGED.

DIAGNOSIS AND TESTING - CONTROL CIRCUIT TEST

The starter control circuit has:

- Starter motor with integral solenoid
- Starter relay
- Transmission range sensor, or Park/Neutral Position switch with automatic transmissions
- Ignition switch
- Battery
- All related wiring and connections
- Powertrain Control Module (PCM)

CAUTION: Before performing any starter tests, the ignition and fuel systems must be disabled.

- To disable ignition and fuel systems, disconnect the Automatic Shutdown Relay (ASD). The ASD relay is located in the Power Distribution Center (PDC). Refer to the PDC cover for the proper relay location.

STARTER SOLENOID

WARNING: CHECK TO ENSURE THAT THE TRANSMISSION IS IN THE PARK POSITION WITH THE PARKING BRAKE APPLIED. THIS MAY RESULT IN PERSONAL INJURY OR DEATH.

(1) Verify battery condition. Battery must be in good condition with a full charge before performing any starter tests. Refer to Battery Tests.

STARTING (Continued)

(2) Perform Starter Solenoid test BEFORE performing the starter relay test.

(3) Perform a visual inspection of the starter/ starter solenoid for corrosion, loose connections or faulty wiring.

(4) Locate and remove the starter relay from the Power Distribution Center (PDC). Refer to the PDC label for relay identification and location.

(5) Connect a remote starter switch or a jumper wire between the remote battery positive post and terminal 87 of the starter relay connector.

(a) If engine cranks, starter/starter solenoid is good. Go to the Starter Relay Test.

(b) If engine does not crank or solenoid chatters, check wiring and connectors from starter relay to starter solenoid and from the battery positive terminal to starter post for loose or corroded connections. Particularly at starter terminals.

(c) Repeat test. If engine still fails to crank properly, trouble is within starter or starter mounted solenoid, and replace starter. Inspect the ring gear teeth.

STARTER RELAY

WARNING: CHECK TO ENSURE THAT THE TRANSMISSION IS IN THE PARK/NEUTRAL POSITION WITH THE PARKING BRAKE APPLIED. THIS MAY RESULT IN PERSONAL INJURY OR DEATH.

RELAY TEST

The starter relay is located in the Power Distribution Center (PDC) in the engine compartment. Refer to the PDC label for relay identification and location.

Remove the starter relay from the PDC as described in this group to perform the following tests:

(1) A relay in the de-energized position should have continuity between terminals 87A and 30, and no continuity between terminals 87 and 30. If OK, go to Step 2. If not OK, replace the faulty relay.

(2) Resistance between terminals 85 and 86 (electromagnet) should be 75 ±5 ohms. If OK, go to Step 3. If not OK, replace the faulty relay.

(3) Connect a battery B+ lead to terminals 85 and a ground lead to terminal 86 to energize the relay. The relay should click. Also test for continuity between terminals 30 and 87, and no continuity between terminals 87A and 30. If OK, refer to Relay Circuit Test procedure. If not OK, replace the faulty relay.

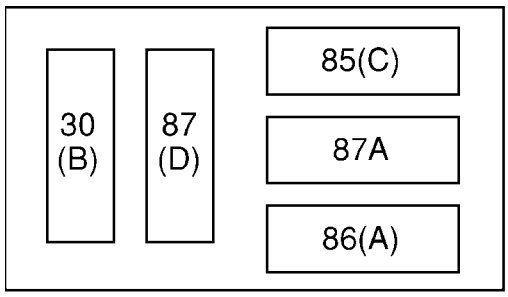

Starter Relay Pinout

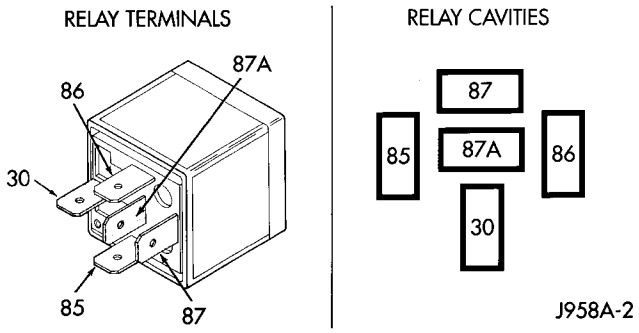

Starter Relay Pinout

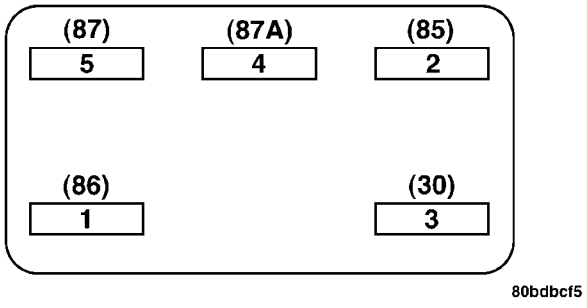

Starter Relay Pinout

CAV	FUNCTION
30	B (+)
85	IGNITION SWITCH OUTPUT
86	PCM-CONTROLLED GROUND
87	STARTER RELAY OUTPUT
87A	NO CONNECT

STARTING (Continued)

RELAY CIRCUIT TEST

(1) The relay common feed terminal cavity (30) is connected to battery voltage and should be hot at all times. If OK, go to Step 2. If not OK, repair the open circuit to the PDC fuse as required.

(2) The relay normally closed terminal (87A) is connected to terminal 30 in the de-energized position, but is not used for this application. Go to Step 3.

(3) The relay normally open terminal (87) is connected to the common feed terminal (30) in the energized position. This terminal supplies battery voltage to the starter solenoid field coils. There should be continuity between the cavity for relay terminal 87 and the starter solenoid terminal at all times. If OK, go to Step 4. If not OK, repair the open circuit to the starter solenoid as required.

(4) The coil battery terminal (85) is connected to the electromagnet in the relay. It is energized when the ignition switch is held in the Start position and the clutch pedal is depressed (manual trans). Check for battery voltage at the cavity for relay terminal 86 with the ignition switch in the Start position and the clutch pedal is depressed (manual trans), and no voltage when the ignition switch is released to the On position. If OK, go to Step 5. If not OK, check for an open or short circuit to the ignition switch and repair, if required. If the circuit to the ignition switch is OK, see the Ignition Switch Test procedure in this group.

(5) The coil ground terminal (86) is connected to the electromagnet in the relay. It is grounded by the PCM if the conditions are right to start the car. For automatic trans. cars the PCM must see Park Neutral switch low and near zero engine speed (rpm). For manual trans. cars the PCM only needs to see near zero engine speed (rpm) and low clutch interlock input and see near zero engine speed (rpm). To diagnose the Park Neutral switch of the trans range sensor refer to the transaxle section. Check for continuity to ground while the ignition switch is in the start position and if equipped the clutch pedal depressed. If not OK and the vehicle has an automatic trans. verify Park Neutral switch operation. If that checks OK check for continuity between PCM and the terminal 86. Repair open circuit as required. Also check the clutch interlock switch operation if equipped with a manual transmission. If OK, the PCM may be defective.

SAFETY SWITCHES

For diagnostics of the Transmission Range Sensor, refer to the Transaxle section for more information.

If equipped with Clutch Interlock/Upstop Switch, refer to Diagnosis and Testing in the Clutch section.

IGNITION SWITCH

After testing starter solenoid and relay, test ignition switch and wiring. Refer to the Ignition Section or Wiring Diagrams for more information. Check all wiring for opens or shorts, and all connectors for being loose or corroded.

BATTERY

For battery diagnosis and testing, refer to the Battery section for procedures.

ALL RELATED WIRING AND CONNECTORS

Refer to Wiring Diagrams for more information.

DIAGNOSIS AND TESTING - FEED CIRCUIT RESISTANCE TEST

Before proceeding with this operation, review Diagnostic Preparation and Starter Feed Circuit Tests. The following operation will require a voltmeter, accurate to 1/10 of a volt.

CAUTION: Ignition and Fuel systems must be disabled to prevent engine start while performing the following tests.

(1) To disable the Ignition and Fuel systems, disconnect the Automatic Shutdown Relay (ASD). The ASD relay is located in the Power Distribution Center (PDC). Refer to the PDC cover for proper relay location.

(2) Gain access to battery terminals.

(3) With all wiring harnesses and components properly connected, perform the following:

(a) Connect the negative lead of the voltmeter to the battery negative post, and positive lead to the battery negative cable clamp. Rotate and hold the ignition switch in the START position. Observe the voltmeter. If voltage is detected, correct poor contact between cable clamp and post.

(b) Connect positive lead of the voltmeter to the battery positive post, and negative lead to the battery positive cable clamp. Rotate and hold the ignition switch key in the START position. Observe the voltmeter. If voltage is detected, correct poor contact between the cable clamp and post.

(c) Connect negative lead of voltmeter to battery negative terminal, and positive lead to engine block near the battery cable attaching point. Rotate and hold the ignition switch in the START position. If voltage reads above 0.2 volt, correct poor contact at ground cable attaching point. If voltage reading is still above 0.2 volt after correcting poor contacts, replace ground cable.

(4) Connect positive voltmeter lead to the starter motor housing and the negative lead to the battery negative terminal. Hold the ignition switch key in

STARTING (Continued)

the START position. If voltage reads above 0.2 volt, correct poor starter to engine ground.

(a) Connect the positive voltmeter lead to the battery positive terminal, and negative lead to battery cable terminal on starter solenoid. Rotate and hold the ignition switch in the START position. If voltage reads above 0.2 volt, correct poor contact at battery cable to solenoid connection. If reading is still above 0.2 volt after correcting poor contacts, replace battery positive cable.

(b) If resistance tests do not detect feed circuit failures, replace the starter motor.

DIAGNOSIS AND TESTING - FEED CIRCUIT TEST

NOTE: The following results are based upon the vehicle being at room temperature.

The following procedure will require a suitable volt-ampere tester (Fig. 1).

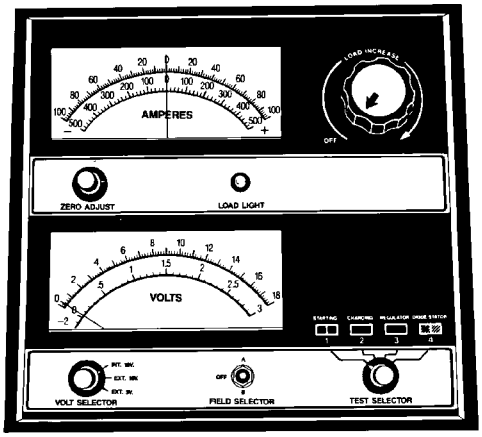

Fig. 1 Volt Ampere Tester

CAUTION: Before performing any starter tests, the ignition and fuel systems must be disabled.

(1) Check battery before performing this test. Battery must be fully charged.

(2) Connect a volt-ampere tester to the battery terminals. Refer to the operating instructions provided with the tester being used.

(3) To disable the ignition and fuel systems, disconnect the Automatic Shutdown Relay (ASD). The ASD relay is located in the Power Distribution Center (PDC). Refer to the PDC cover for proper relay location.

(4) Verify that all lights and accessories are OFF, and the transmission shift selector is in the PARK and SET parking brake.

CAUTION: Do not overheat the starter motor or draw the battery voltage below 9.6 volts during cranking operations.

(5) Rotate and hold the ignition switch in the START position. Observe the volt-ampere tester (Fig. 1).

- If voltage reads above 9.6 volts, and amperage draw reads above 280 amps, check for engine seizing or faulty starter.
- If voltage reads 12.4 volts or greater and amperage reads 0 to 10 amps, check for corroded cables and/or bad connections.
- Voltage below 9.6 volts and amperage draw above 300 amps, the problem is the starter. Replace the starter refer to starter removal.

(6) After the starting system problems have been corrected, verify the battery state-of-charge and charge battery if necessary. Disconnect all testing equipment and connect ASD relay. Start the vehicle several times to assure the problem has been corrected.

SPECIFICATIONS

Torques

DESCRIPTION	N·m	Ft. Lbs.	In. Lbs.
Starter Mounting Bolts	47.4	35	
Starter Solenoid Battery Nut	11.3	8.3	100

STARTING (Continued)

STARTER

MANUFACTURER	NIPPONDENSO
Engine Application	2.4L /3.3/3.8L
Power rating	1.2 Kw
Voltage	12 VOLTS
No. of Fields	4
No. of Poles	4
Brushes	4
Drive	Conventional Gear Train
Free running Test	
Voltage	11
Amperage Draw	73 Amp
Minimum Speed	3401 RPM
SolenoidClosing Voltage	7.5 Volts
Cranking Amperage Draw test	150 - 200 Amps.

Engine should be up to operating temperature. Extremely heavy oil or tight engine will increase starter amperage draw.

STARTER MOTOR

REMOVAL

REMOVAL - 2.4L

(1) Release hood latch and open hood (Fig. 2).

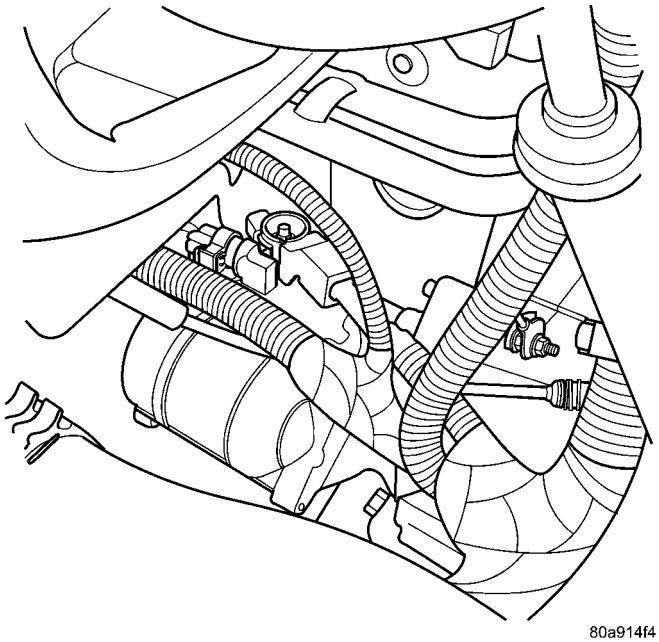

Fig. 2 STARTER 2.4L

(2) Disconnect and isolate the battery negative cable.

(3) Disconnect solenoid wire connector from terminal (Fig. 3).

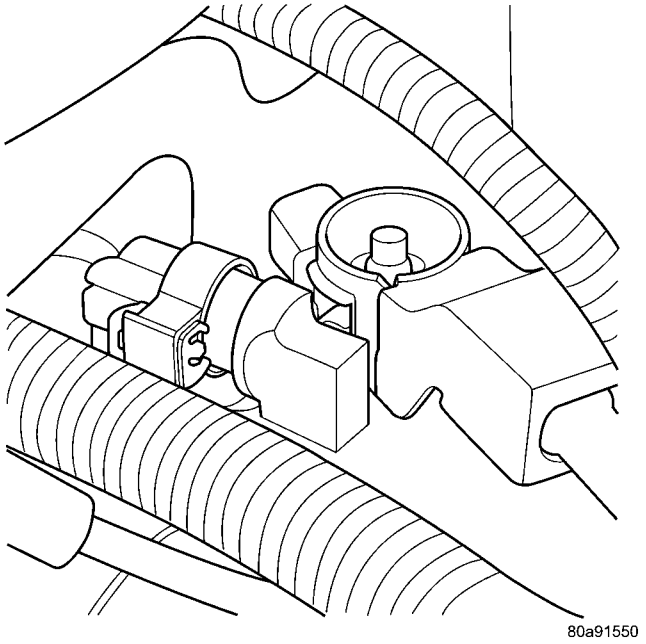

Fig. 3 BATTERY CABLE AND FIELD WIRE 2.4L

(4) Remove nut holding B+ wire to terminal.

(5) Disconnect solenoid and B+ wires from starter terminals.

(6) Remove the lower bolt.

(7) Remove the upper bolt and ground wire (Fig. 4).

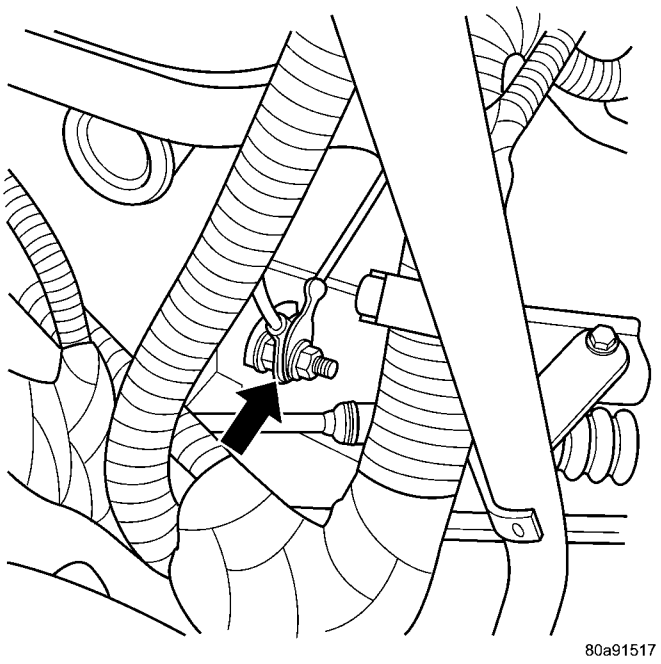

Fig. 4 Upper Bolt and Ground Wire

STARTER MOTOR (Continued)

(8) Remove starter.

REMOVAL - 3.3/3.8L

(1) Release hood latch and open hood.
(2) Disconnect and isolate the battery negative cable.
(3) Hoist and support vehicle on safety stands.
(4) Remove nut holding B+ terminal to starter solenoid (Fig. 5).

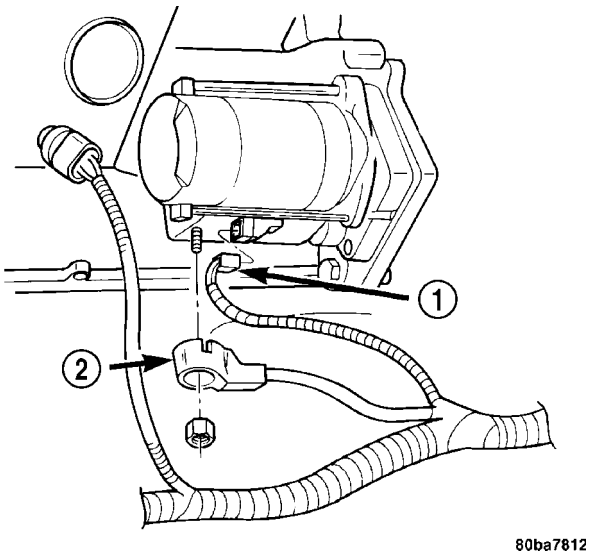

Fig. 5 Starter

1 - SOLENOID CONNECTOR
2 - B+ CONNECTOR

(5) Disconnect solenoid connector from starter.
(6) Remove bolts holding starter to transaxle bellhousing (Fig. 6).

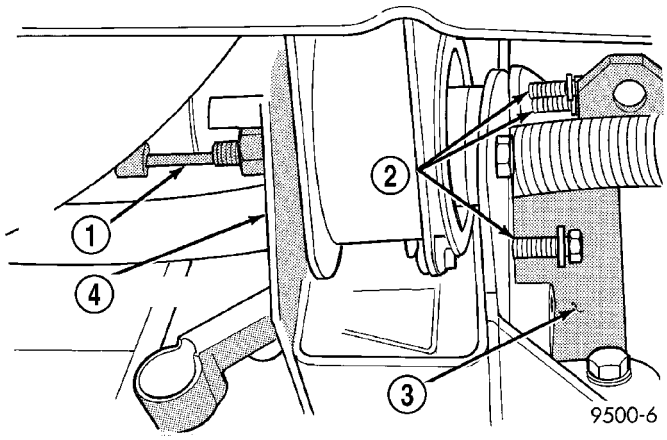

Fig. 6 Starter Bolts

1 - STARTER
2 - STARTER BOLTS
3 - TRANSAXLE
4 - ENGINE MOUNT

(7) Remove starter from bellhousing (Fig. 7).

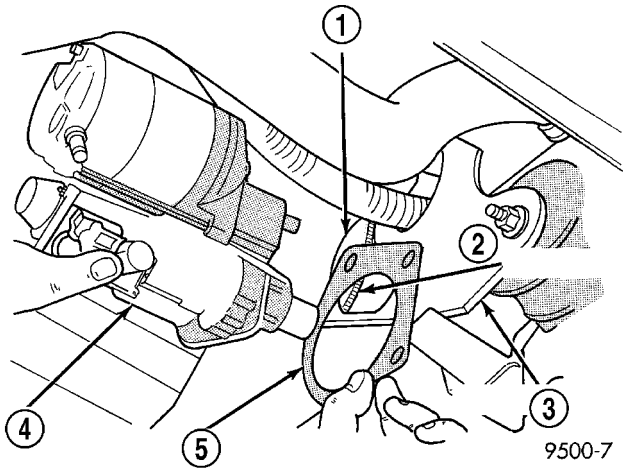

Fig. 7 STARTER 3.3/3.8L

1 - BELL HOUSING PLATE
2 - FLYWHEEL
3 - ENGINE MOUNT
4 - STARTER
5 - SPACER

(8) Separate starter spacer from transaxle bellhousing.

REMOVAL - 2.5L

(1) Disconnect the negative battery cable.
(2) Raise vehicle and support.
(3) Remove the lower engine splash shield.
(4) Remove the electrical connectors from the starter (Fig. 8).

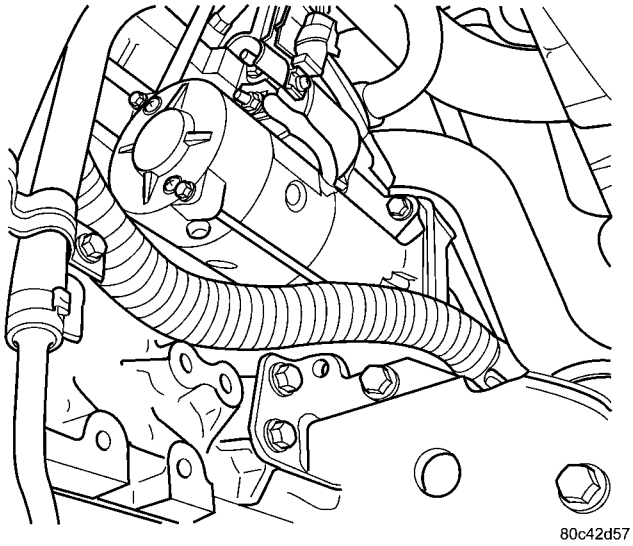

Fig. 8 STARTER LOCATION

STARTER MOTOR (Continued)

(5) Remove the starter mounting bolts (Fig. 9).

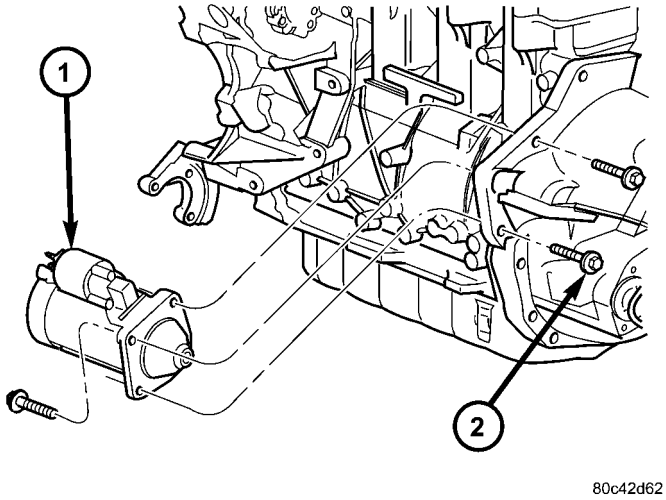

Fig. 9 STARTER MOUNTING BOLTS

1 - Starter
2 - Mounting Bolts

(6) Remove the starter.

INSTALLATION

INSTALLATION - 2.4L

(1) Place starter in position on vehicle.
(2) Install the lower bolts to hold starter to transaxle bellhousing.
(3) Install the upper bolt and ground wire (Fig. 4).
(4) Place solenoid and B+ wires in position on starter terminals (Fig. 3).
(5) Install nut to hold B+ wire to terminal.
(6) Connect solenoid wire connector onto terminal.
(7) Connect battery negative cable.
(8) Verify starter operation.

INSTALLATION - 3.3/3.8L

(1) Place starter spacer in position on transaxle bellhousing, flange toward flywheel.
(2) Place starter in position on bellhousing.
(3) Install bolts and ground wire (Fig. 4) to hold starter to transaxle bellhousing.
(4) Connect solenoid connector into starter.
(5) Install nut to hold B+ terminal to starter solenoid.
(6) Lower vehicle.
(7) Connect battery negative cable.
(8) Verify starter operation.

INSTALLATION - 2.5L

(1) Raise vehicle and support.
(2) Install the starter.
(3) Install the starter mounting bolts (Fig. 9).
(4) Install the electrical connectors to the starter (Fig. 8).
(5) Install the lower engine splash shield.
(6) Connect the negative battery cable.
(7) Lower vehicle.

HEATED SYSTEMS

TABLE OF CONTENTS

page

HEATED GLASS 1
HEATED MIRRORS 6
HEATED SEAT SYSTEM 7

HEATED GLASS

TABLE OF CONTENTS

page

HEATED GLASS
DESCRIPTION 1
OPERATION 2
DIAGNOSIS AND TESTING
ELECTRIC BACKLIGHT (EBL) SYSTEM 2
REAR WINDOW DEFOGGER RELAY
DESCRIPTION 3
OPERATION 3
REMOVAL 4
INSTALLATION 4
REAR WINDOW DEFOGGER SWITCH
DESCRIPTION 4
OPERATION 4
REAR WINDOW DEFOGGER GRID
STANDARD PROCEDURE
GRID REPAIR PROCEDURE 5

HEATED GLASS

DESCRIPTION

CAUTION: Grid lines can be damaged or scraped off with sharp instruments. Care should be taken in cleaning glass or removing foreign materials, decals or stickers. Normal glass cleaning solvents or hot water used with rags or toweling is recommended.

The rear window defogger system, also known as electrical backlight (EBL), consists of two vertical bus bars linked by a series of grid lines fired onto the inside surface of the rear window (Fig. 1).

The EBL system is turned ON or OFF by a control switch located on the A/C-heater control at the center of the instrument panel and by a rear window defogger relay timing circuit integral to the integrated power module (IPM) (Refer to 8 - ELECTRICAL/ HEATED GLASS/REAR WINDOW DEFOGGER SWITCH - DESCRIPTION).

Circuit protection is provided by a 40 amp fuse located in the IPM.

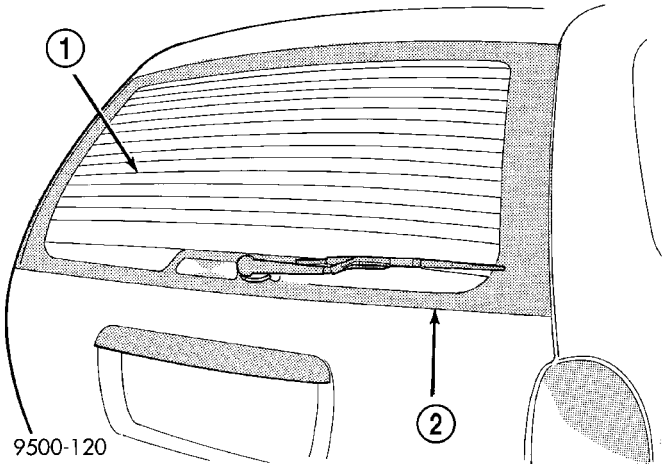

Fig. 1 Rear Window Defogger - Typical

1 - REAR DEFOGGER GRID
2 - REAR WINDOW

HEATED GLASS (Continued)

OPERATION

When the rear window defogger button is depressed to the On position, current is directed to the rear defogger grid lines and the heated power mirrors (if equipped). The heated grid lines heat the glass to help clear the rear window and side mirror surfaces of fog or frost.

The electric backlight (EBL) system is controlled by a momentary switch located in the A/C-heater control on the instrument panel. A yellow indicator in the switch will illuminate to indicate when the system is turned on. The integrated power module (IPM) contains the EBL system control circuitry.

NOTE: The rear window defogger turns off automatically after approximately 10 minutes of initial operation. Each following activation cycle of the defogger system will last approximately five minutes.

The EBL system will be automatically turned off after a programmed time interval of about ten minutes. After the initial time interval has expired, if the defogger switch is turned on again during the same ignition cycle, the defogger system will automatically turn off after about five minutes.

The EBL system will automatically shut off if the ignition switch is turned to the Off position, or it can be turned off manually by depressing the defogger switch a second time.

DIAGNOSIS AND TESTING

ELECTRIC BACKLIGHT (EBL) SYSTEM

NOTE: Illumination of the defogger switch indicator lamp means that there is electrical current available at the output of the rear window defogger logic circuitry, but does not confirm that the electrical current is reaching the rear glass heating grid lines.

NOTE: For circuit descriptions and diagrams of the rear window defogger system, refer to 8W - WIRING DIAGRAM INFORMATION.

Operation of the electrical backlight (EBL) system can be confirmed by the following:

(1) Turn the ignition switch to the On position. Set the defogger switch in the On position. The rear window defogger operation can be checked by feeling the rear window glass. A distinct difference in temperature between the grid lines and the adjacent clear glass can be detected within three to four minutes of operation.

(2) If a temperature difference is not detected, use a 12-volt DC voltmeter and contact the rear glass heating grid terminal B with the negative lead, and terminal A with the positive lead (Fig. 2). The voltmeter should read battery voltage. If the voltmeter does not read battery voltage, check the following:

- Confirm that the ignition switch is in the On position.
- Make sure that the rear glass heating grid feed wire and ground wire are connected to the terminals. Confirm that the ground wire has continuity to ground.
- Check that fuse 13 (40 amp) in the integrated power module (IPM) is OK. The fuse must be tight in it's receptacle and all electrical connections must be secure.

(3) When the above steps have been completed and the rear glass heating grid is still inoperative, one or more of the following is faulty. It may be necessary to connect a DRBIII® scan tool to perform further diagnostics. Refer to Body Diagnostic Procedures.

- Rear window defogger switch in the A/C-heater control.
- J1850 bus communication between the A/C-heater control and the front control module (FCM).
- Rear window defogger (EBL) relay in the IPM.
- Rear window defogger (EBL) relay control circuity in the IPM.
- Check for a loose wire connector or a wire pushed out of a connector.
- Rear window grid lines (all grid lines would have to be broken, or the power feed or ground wire not connected, for the entire heating grid to be inoperative).

(4) If the system operation has been verified but defogger switch LED indicator does not illuminate, replace the A/C-heater control.

HEATED GLASS (Continued)

(5) If broken defogger grid lines are suspected, use a 12-volt DC voltmeter and contact terminal B with the negative lead and each rear glass heating grid line at it's mid-point with the positive lead. The voltmeter should read approximately 6 volts at each grid line mid-point C. If the voltmeter does not read approximately 6 volts, repair the open grid line(s) (Refer to 8 - ELECTRICAL/HEATED GLASS/REAR WINDOW DEFOGGER GRID - STANDARD PROCEDURE).

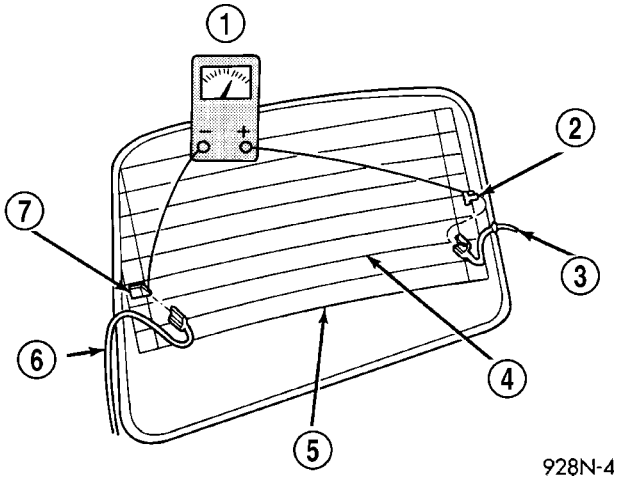

Fig. 2 Grid Line Test

1 - VOLTMETER
2 - VOLTAGE FEED (A)
3 - FEED WIRE
4 - MID-POINT (C)
5 - HEATED WINDOW GRID
6 - GROUND WIRE
7 - GROUND (B)

REAR WINDOW DEFOGGER RELAY

DESCRIPTION

The rear window defogger (EBL) relay (Fig. 3) is a International Standards Organization (ISO)-type relay. Relays conforming to the ISO specifications have common physical dimensions, current capacities, terminal patterns, and terminal functions. The rear window defogger relay is a electromechanical device that switches battery current through a fuse in the integrated power module (IPM) to the rear window defogger grid and switches battery current through a positive thermal coefficient (PTC) in the IPM to the outside mirror heating grids. The relay is energized when the relay coil is provided a ground path by the rear window defogger relay control in the front control module (FCM).

The rear window defogger (EBL) relay is located in the IPM in the engine compartment. See the fuse and relay layout map on the inner surface of the cover of the IPM for rear window defogger relay identification and location.

The rear window defogger (EBL) relay cannot be adjusted or repaired and, if damaged or faulty, it must be replaced.

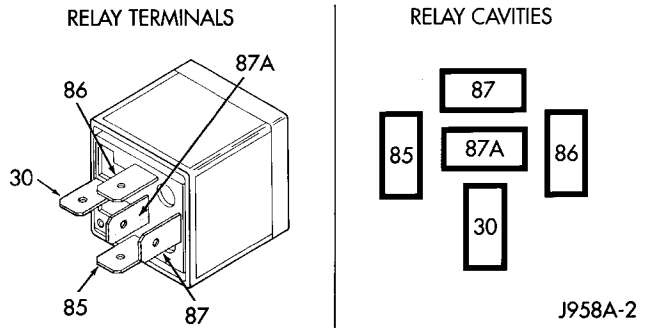

Fig. 3 Rear Window Defogger (EBL) Relay

OPERATION

The ISO-standard rear window defogger (EBL) relay consists of an electromagnetic coil, a resistor or diode, and three (two fixed and one movable) electrical contacts. The movable (common feed) relay contact is held against one of the fixed contacts (normally closed) by spring pressure. When the electromagnetic coil is energized, it draws the movable contact away from the normally closed fixed contact, and holds it against the other (normally open) fixed contact.

When the electromagnetic coil is de-energized, spring pressure returns the movable contact to the normally closed position. The resistor is connected in parallel with the electromagnetic coil in the relay, and helps to dissipate voltage spikes that are produced when the coil is de-energized.

Refer to the appropriate wiring information for diagnosis and testing of the EBL relay and for complete EBL system wiring diagrams.

REAR WINDOW DEFOGGER RELAY (Continued)

REMOVAL

(1) Disconnect and isolate the negative battery cable.

(2) Remove the cover from the integrated power module (IPM) (Fig. 4).

NOTE: Refer to the fuse and relay layout map on the inner surface of the cover of the IPM for rear window defogger (EBL) relay identification and location.

(3) Remove the EBL relay from the IPM.

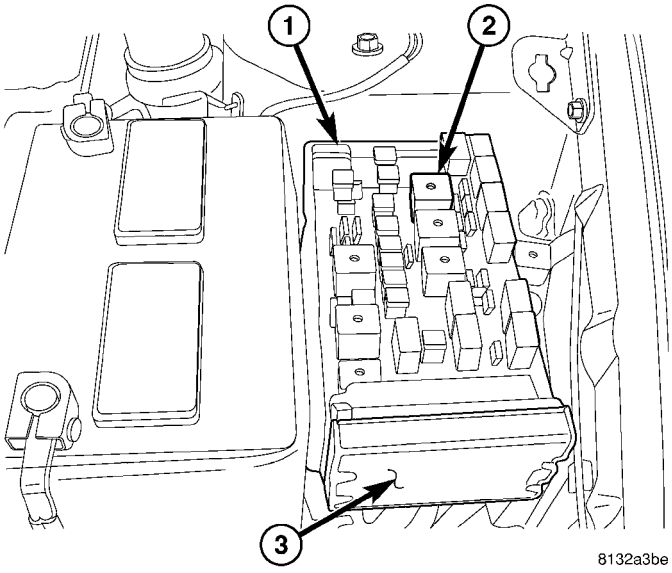

Fig. 4 Rear Window Defogger (EBL) Relay

1 - INTEGRATED POWER MODULE (IPM)
2 - REAR WINDOW DEFOGGER (EBL) RELAY
3 - FRONT CONTROL MODULE (FCM)

INSTALLATION

NOTE: Refer to the fuse and relay map on the inner surface of the cover of the integrated power module (IPM) for rear window defogger (EBL) relay identification and location.

(1) Position the EBL relay into the proper receptacle in the IPM.

(2) Align the EBL relay terminals with the terminal cavities in the IPM receptacle.

(3) Push down firmly on the EBL relay until the terminals are fully seated in the terminal cavities.

(4) Install the cover onto the IPM.

(5) Reconnect the negative battery cable.

REAR WINDOW DEFOGGER SWITCH

DESCRIPTION

The switch for the EBL system is integrated into the A/C-heater control located in the center of the instrument panel (Fig. 5).

When the rear window defogger switch is turned to the ON position, current is directed to the rear defogger grid lines and the heated power mirrors (if equipped). The heated grid lines heat the glass to help clear the surface of fog or frost.

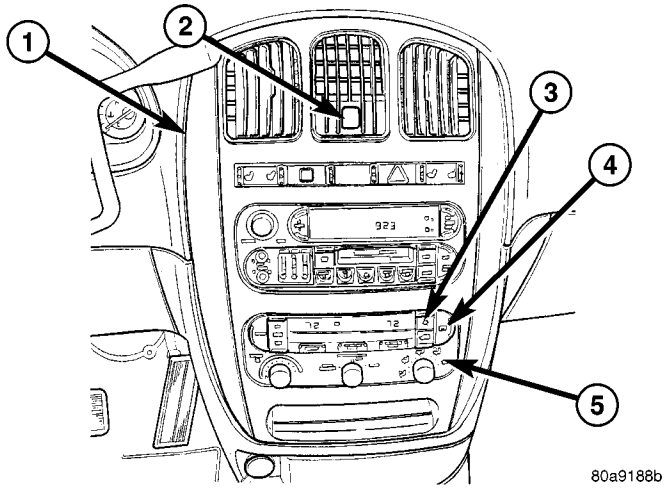

Fig. 5 A/C-Heater Control - Typical

1 - TRIM BEZEL
2 - INFRARED TEMPERATURE SENSOR
3 - A/C REQUEST SWITCH
4 - EBL/HEATED MIRROR SWITCH
5 - FRONT WINDOW DEFROSTER SELECTOR

OPERATION

Depressing the rear window defogger switch energizes the A/C-heater control module which then requests the front control module (FCM) to activate the rear window defogger (EBL) relay via the communication bus. The EBL relay controls the current to flow to the grids of the rear window defogger and the heated power side view mirrors. The EBL relay will be on for approximately 10 minutes or until the control switch or ignition is turned off. An amber indicator lamp in the defogger switch illuminates to indicate when the EBL system is On.

The rear window defogger switch and indicator lamp cannot be repaired and, if faulty or damaged, the entire A/C-heater control must be replaced.

REAR WINDOW DEFOGGER GRID

STANDARD PROCEDURE

GRID REPAIR PROCEDURE

WARNING: Materials contained in the Repair Kit (Part Number 04549275) may cause skin or eye irritation. The kit contains epoxy resin and amine type hardener, which are harmful if swallowed. Avoid contact with the skin and eyes. For skin contact, wash the affected areas with soap and water. For contact with the eyes, flush with plenty of water. Do not take internally. If taken internally, induce vomiting and call a physician immediately. Use with adequate ventilation. Do not use near fire or flame. Contains flammable solvents. Keep out of the reach of children. Failure to follow the warnings could result in possible personal injury or death.

Repair of the rear glass heating grid lines, bus bars or terminals can be accomplished using the Mopar® Rear Window Defogger Repair Kit (Part Number 04549275) or equivalent.

(1) Mask the repair area with masking tape so that the conductive epoxy can be applied neatly (Fig. 6). Extend the epoxy application onto the grid line or the bus bar on each side of the break.

(2) Follow the instructions in the repair kit for preparing the damaged area.

(3) Remove the package separator clamp and mix the two conductive epoxy components thoroughly within the packaging. Fold the package in half and cut the center corner to dispense the epoxy.

(4) For grid line repairs, mask the area to be repaired with masking tape or use a template.

(5) Apply the epoxy through the slit in the masking tape or template. Overlap both ends of the break by at least 19 millimeters (0.75 inch).

(6) For a terminal replacement, mask the adjacent areas so the epoxy can be extended onto the adjacent grid line as well as the bus bar. Apply a thin layer of epoxy to the area where the terminal was fastened and onto the adjacent grid line.

(7) Apply a thin layer of conductive epoxy to the terminal and place it in the proper location on the bus bar. To prevent the terminal from moving while the epoxy is curing, it must be wedged or clamped.

(8) Carefully remove the masking tape or template.

CAUTION: Do not allow the glass surface to exceed 204° C (400° F) when using a heat gun, or the glass may fracture.

(9) Allow the epoxy to cure 24 hours at room temperature, or carefully use a heat gun for fifteen minutes. When using a heat gun, hold it approximately 25.4 centimeters (10 inches) from the repair and do not allow the glass surface to exceed 204° C (400° F).

NOTE: Do not attach the wire harness connectors to the terminals until the curing process is complete.

(10) After the conductive epoxy is properly cured, remove the wedge or clamp from the terminal.

(11) Connect the wire harness leads to the grid terminals and verify EBL operation.

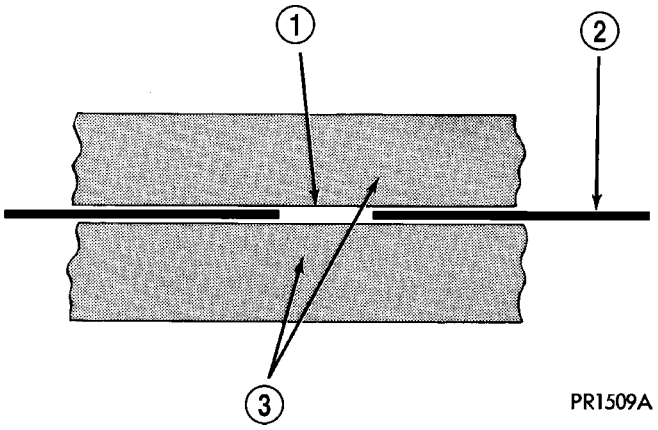

Fig. 6 Grid Line Repair

1 - BREAK
2 - GRID LINE
3 - MASKING TAPE

HEATED MIRRORS

TABLE OF CONTENTS

page

HEATED MIRRORS
DESCRIPTION 6
OPERATION 6

HEATED MIRRORS

DESCRIPTION

The optional heated mirror system is controlled by the momentary rear window defogger switch which is integral to the A/C-heater control (Fig. 1). An amber indicator lamp in the switch will illuminate to indicate when the rear window defogger (EBL) system is turned on.

The heated mirror system only operates in concert with the EBL system, and will be automatically shut off after a programmed time interval of about 10 minutes. After the initial time interval has expired, if the defogger switch is turned on again during the same ignition cycle, the heated mirror system will automatically shut off after about 5 minutes.

The heated mirror system will automatically shut off if the ignition switch is turned to the Off position, or it can be shut off manually by pressing the rear window defogger switch a second time.

OPERATION

When the rear window defogger switch is pressed, the rear window defogger (EBL) system becomes activated and an electric heater grid located behind the glass of each of the outside rear view mirrors is energized. When energized, each of these heater grids produce heat to help clear the outside rear view mirrors of ice, snow, or fog.

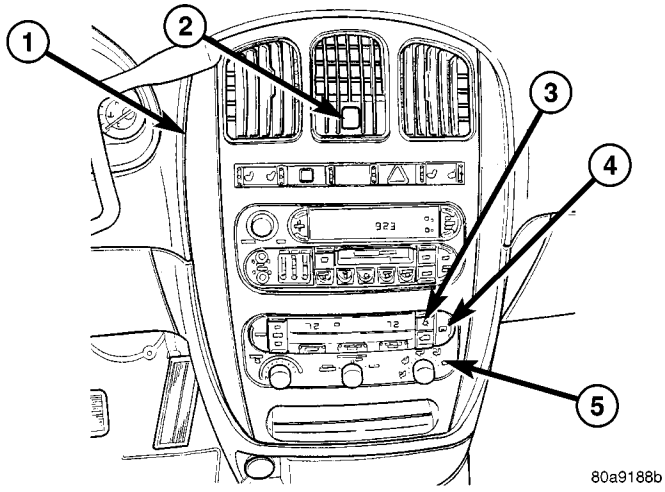

Fig. 1 A/C-Heater Control Panel

1 - TRIM BEZEL
2 - INFRARED TEMPERATURE SENSOR
3 - A/C REQUEST SWITCH
4 - EBL/HEATED MIRROR SWITCH
5 - FRONT WINDOW DEFROSTER SELECTOR

If the outside mirror heating grids are both inoperative, refer to DIAGNOSIS AND TESTING - REAR WINDOW DEFOGGER SYSTEM in his group. If only one of the outside mirror heating grids is inoperative, Refer to 8 - ELECTRICAL/POWER MIRRORS - DIAGNOSIS AND TESTING.

The heating grid behind each outside mirror glass cannot be repaired and, if faulty or damaged, the entire power mirror assembly must be replaced.

HEATED SEAT SYSTEM

TABLE OF CONTENTS

	page
HEATED SEAT SYSTEM	
DESCRIPTION	7
OPERATION	8
DIAGNOSIS AND TESTING HEATED SEAT SYSTEM	8
HEATED SEAT SWITCH	
DESCRIPTION	8
OPERATION	9
DIAGNOSIS AND TESTING DRIVER HEATED SEAT SWITCH	9
REMOVAL	10
INSTALLATION	10
HEATED SEAT ELEMENTS	
DESCRIPTION	11
OPERATION	11
DIAGNOSIS AND TESTING HEATED SEAT ELEMENTS	11
REMOVAL	12
INSTALLATION	12
HEATED SEAT SENSOR	
DESCRIPTION	13
OPERATION	13
DIAGNOSIS AND TESTING HEATED SEAT SENSOR	13

HEATED SEAT SYSTEM

DESCRIPTION

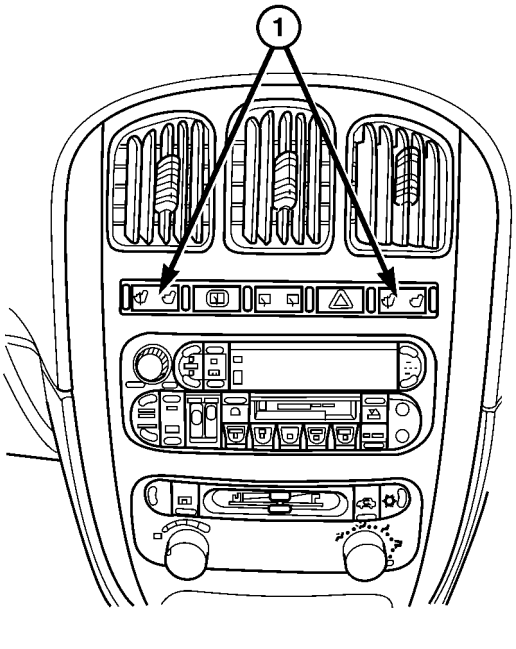

Fig. 1 HEATED SEAT SWITCH LOCATIONS

1 - HEATED SEAT SWITCHES

Vehicles with the heated seat option can be visually identified by the two separate heated seat switches located in the instrument panel center stack, just above the radio (Fig. 1). The heated seat system allows the front seat driver and passenger to select from two different levels of supplemental electrical seat heating (HI/LO), or no seat heating to suit their individual comfort requirements. The heated seat system for this vehicle includes the following major components:

- **Heated Seat Elements** - Four heated seat elements are used per vehicle, two for each front seat. One heated seat element is integral to each front seat trim cover, one in the seat back and one in the seat bottom (cushion). Service replacement heating elements are available, (Refer to 8 - ELECTRICAL/ HEATED SEATS/HEATED SEAT ELEMENT - DESCRIPTION) for additional information.
- **Heated Seat Modules** - Two heated seat modules are used per vehicle. One module is mounted to each of the seat cushion pans, located under the forward edge of each front seat. (Refer to 8 - ELECTRICAL/ELECTRONIC CONTROL MODULES/ MEMORY HEATED SEAT/MIRROR MODULE - DESCRIPTION) for additional information.
- **Heated Seat Sensors** - Two heated seat sensors are used per vehicle, one for each front seat. The heated seat sensors are integral to each of the heated seat bottoms (cushions).
- **Heated Seat Switch** - Two heated seat switches are used per vehicle, one for the driver and one for the passenger side front seats. The switches are mounted in the instrument panel center stack. (Refer to 8 - ELECTRICAL/HEATED SEATS/ DRIVER HEATED SEAT SWITCH - DESCRIPTION) for additional information.

HEATED SEAT SYSTEM (Continued)

Hard wired circuitry connects the heated seat system components to each other through the electrical system of the vehicle. These circuits may be connected to each other, to the vehicle electrical system and to the heated seat system components through the use of a combination of soldered splices and splice block connectors. Refer to the appropriate wiring information for complete circuit schematic or connector pin-out information.

OPERATION

The heated seat system components operate on battery current received through a fuse in the Integrated Power Module (IPM) on a fused ignition switch output (run) circuit from the Body Control Module (BCM). The system will only operate when the ignition switch is in the On position. The heated seat system will be turned Off automatically whenever the ignition switch is turned to any position except On. Also, the heated seat system will not operate when the surface temperature of the seat cushion cover at either heated seat sensor is above the designed temperature set points of the system.

DIAGNOSIS AND TESTING

HEATED SEAT SYSTEM

The most efficient means of diagnosing the heated seat system is by individual component. For diagnosis of a specific component refer to the following:

- Heated seat module, (Refer to 8 - ELECTRICAL/ELECTRONIC CONTROL MODULES/MEMORY HEATED SEAT/MIRROR MODULE - DIAGNOSIS AND TESTING).
- Heated seat elements, (Refer to 8 - ELECTRICAL/HEATED SEATS/HEATED SEAT ELEMENT - DIAGNOSIS AND TESTING).
- Heated seat switch, (Refer to 8 - ELECTRICAL/HEATED SEATS/DRIVER HEATED SEAT SWITCH - DIAGNOSIS AND TESTING).
- Heated seat sensor, (Refer to 8 - ELECTRICAL/HEATED SEATS/HEATED SEAT SENSOR - DIAGNOSIS AND TESTING).

Refer to the appropriate wiring information for complete circuit schematic or connector pin-out information.

HEATED SEAT SWITCH

DESCRIPTION

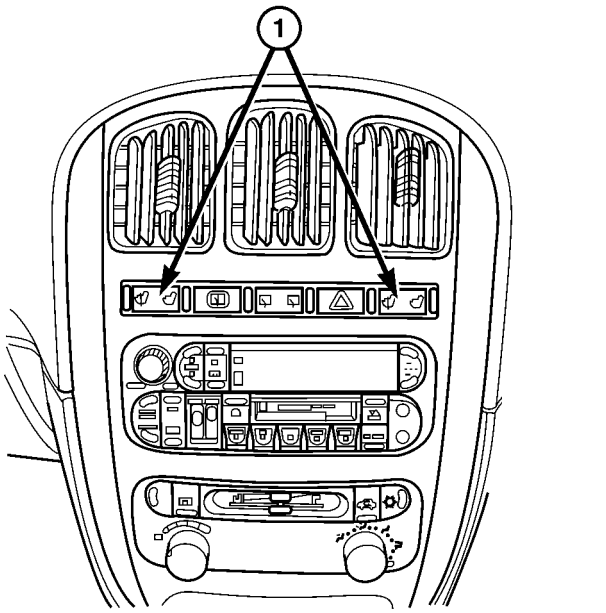

Fig. 2 HEATED SEAT SWITCH LOCATION

1 - HEATED SEAT SWITCHES

The heated seat switches are mounted in the instrument panel center bezel (Fig. 2). The two three-position rocker-type switches, one switch for each front seat, are incorporated into one large switch assembly that also includes the hazard, rear window wiper and washer switches. Each heated seat switch provides a resistor multiplexed signal to its respective Heated Seat Module (HSM) through separate hard wired circuits. Each switch has an Off, Low, and High position so that both the driver and the front seat passenger can select a preferred seat heating mode. Each switch has two Light-Emitting Diodes (LED) which light to indicate that the heater for the seat is turned on.

The heated seat switches and their LEDs cannot be repaired. If either switch or LED is faulty or damaged, the entire switch assembly must be replaced.

HEATED SEAT SWITCH (Continued)

OPERATION

There are three positions that can be selected with each of the heated seat switches: Off, Low, or High. When the left side of the switch rocker is fully depressed, the Low position is selected and the low position LED indicator illuminates. When the right side of the switch rocker is fully depressed, the High position is selected and the high position LED indicator illuminates. When the switch rocker is moved to its neutral position (middle), Off is selected and both LED indicators are extinguished.

Each switch provides separate resistor, hard wire inputs to its respective Heated Seat Module (HSM) to indicate the selected switch position. The heated seat module responds to the heated seat switch status messages by controlling the output to the seat heater elements of the selected seat. The Low heat position set point is about 36° C (97° F), and the High heat position set point is about 41° C (105° F).

DIAGNOSIS AND TESTING

DRIVER HEATED SEAT SWITCH

Refer to the appropriate wiring information for complete circuit schematic or connector pin-out information.

WARNING: REFER TO THE RESTRAINTS SECTION OF THIS MANUAL BEFORE ATTEMPTING ANY STEERING WHEEL, STEERING COLUMN, SEAT OR INSTRUMENT PANEL COMPONENT DIAGNOSIS OR SERVICE. FAILURE TO TAKE THE PROPER PRECAUTIONS COULD RESULT IN ACCIDENTAL AIRBAG DEPLOYMENT AND POSSIBLE PERSONAL INJURY.

CHECKING SWITCH SIGNAL AND WIRING AT THE MODULE

(1) Disconnect and isolate the battery negative cable.

(2) Access and disconnect the gray 4-way connector from the heated seat module. Visually inspect wiring terminals for damage that would prevent positive connection. If not OK, repair or replace the necessary components.

(3) Connect the battery negative cable. Place the heated seat switch in the LO position. Using an Ohmmeter, check the resistance between cavities 2 and 3 of the gray connector noted above. Resistance should be about 3.5 kilohms (3500 ohms). If not OK, check resistance directly at switch, as noted below. If OK, proceed to the next step. If not OK, replace the faulty switch.

(4) Place the heated seat switch in the HI position. Using an ohmmeter, check the resistance between cavities 2 and 3 of the gray connector noted above. Resistance should be about 1.4 kilohms (1400 ohms). If not OK, check resistance directly at the switch, as indicated in the Heated Seat Switch Test Table. If OK, proceed. If not OK replace the faulty switch.

(5) With the system ON in the HI position, check for battery voltage and ground at cavities 4 and 1. If OK, proceed with testing remaining components. If not OK, repair open or shorted wiring.

CHECKING SWITCH ONLY

(1) Disconnect and isolate the battery negative cable. Remove the center bezel from the instrument panel (Refer to 23 - BODY/INSTRUMENT PANEL/ INSTRUMENT PANEL CENTER BEZEL - REMOVAL). Check for continuity between the ground circuit cavity (#10) of the instrument panel center bezel switch electrical connector and a good ground. There should be continuity. If OK, go to Step 2. If not OK, repair the open ground circuit to ground as required.

(2) Connect the battery negative cable. Turn the ignition switch to the On position. Check for battery voltage at the fused ignition switch output (run) circuit cavity of the instrument panel center bezel switch electrical connector (#4). If OK, turn the ignition switch to the Off position, and go to Step 3. If not OK, repair the open fused ignition switch output (run) circuit as required.

(3) Test the heated seat switch as shown in the Heated Seat Switch Test chart and the connector pinout below (Fig. 3). If OK, go to Step 4. If not OK, replace the instrument panel center bezel switch assembly.

HEATED SEAT SWITCH (Continued)

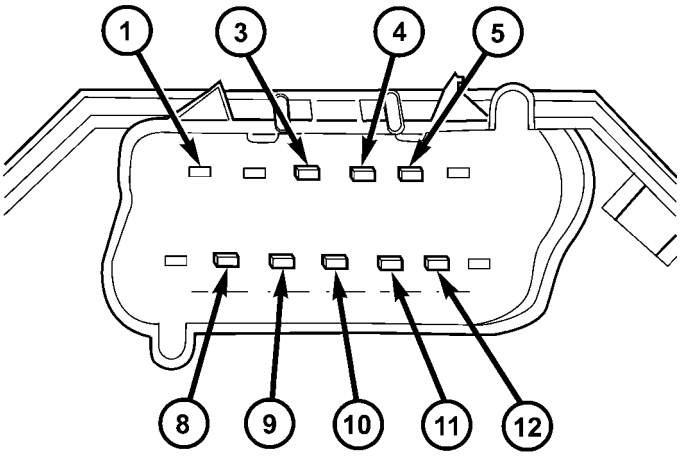

80963684

Fig. 3 Instrument Panel Center Bezel Switch Connector

DRIVER HEATED SEAT SWITCH TEST		
SWITCH POSITION	RESISTANCE BETWEEN	RESISTANCE (OHMS)
Off	Pin 4 & 5	OPEN
Low	Pin 4 & 5	3570
High	Pin 4 & 5	1430
All resistance values are ±1%.		

PASSENGER HEATED SEAT SWITCH TEST		
SWITCH POSITION	RESISTANCE BETWEEN	RESISTANCE (OHMS)
Off	Pin 3 & 4	OPEN
Low	Pin 3 & 4	3570
High	Pin 3 & 4	1430
All resistance values are ±1%.		

(4) Connect the instrument panel center bezel switch and test the heated seat system for proper operation. If the system is still inoperative proceed with checking remaining components.

REMOVAL

WARNING: ON VEHICLES EQUIPPED WITH AIRBAGS, REFER TO THE RESTRAINTS SECTION OF THIS MANUAL BEFORE ATTEMPTING ANY STEERING WHEEL, STEERING COLUMN, SEAT OR INSTRUMENT PANEL COMPONENT DIAGNOSIS OR SERVICE. FAILURE TO TAKE THE PROPER PRECAUTIONS COULD RESULT IN ACCIDENTAL AIRBAG DEPLOYMENT AND POSSIBLE PERSONAL INJURY.

(1) Disconnect and isolate the battery negative cable.

(2) Remove the instrument panel center bezel, (Refer to 23 - BODY/INSTRUMENT PANEL/INSTRUMENT PANEL CENTER BEZEL - REMOVAL).

(3) Remove the three screws (Fig. 4) that secure the heated seat switch to the back of the instrument panel center bezel.

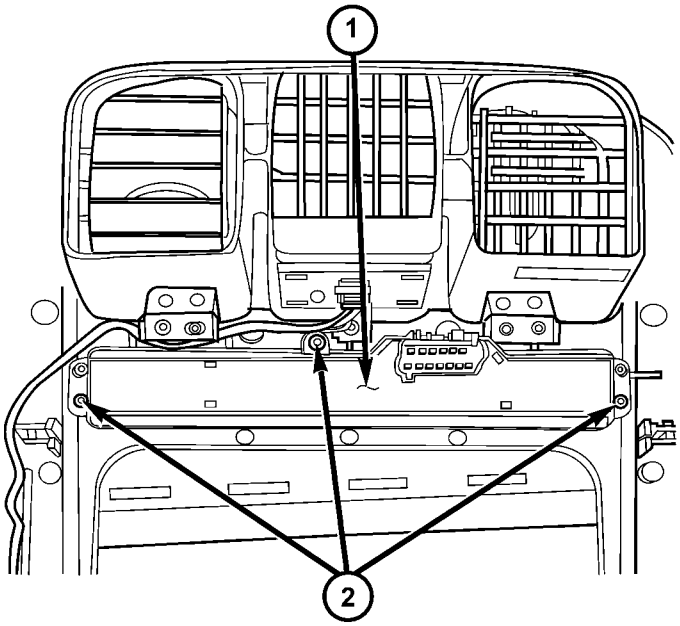

80963666

Fig. 4 SWITCH RETAINING SCREWS

1 - HEATED SEAT SWITCH ASSEMBLY
2 - RETAINING SCREWS

(4) Remove the heated seat switch from the back of the instrument panel center bezel.

INSTALLATION

(1) Position the heated seat switch onto the back of the instrument panel center bezel.

(2) Install and tighten the three screws (Fig. 5) that secure the heated seat switch to the back of the instrument panel center bezel. Tighten the screws to 1.5 N·m (13 in. lbs.).

HEATED SEAT SWITCH (Continued)

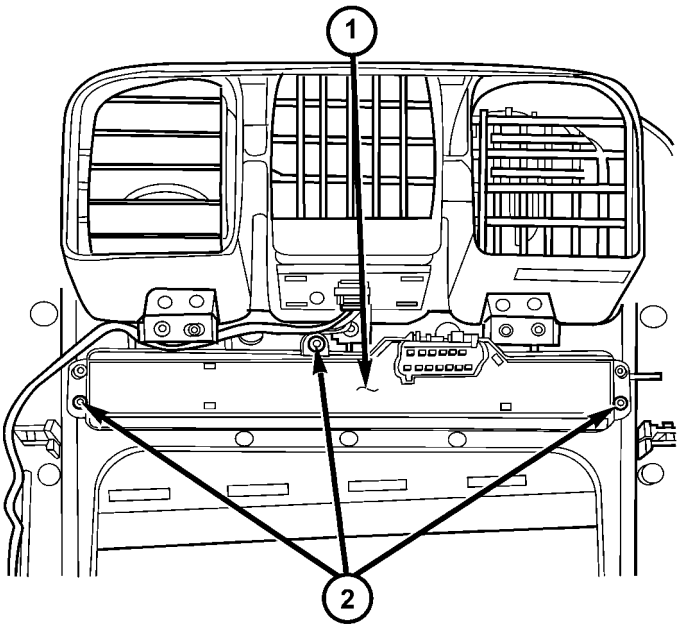

Fig. 5 SWITCH RETAINING SCREWS

1 - HEATED SEAT SWITCH ASSEMBLY
2 - RETAINING SCREWS

(3) Install the center bezel onto the instrument panel, (Refer to 23 - BODY/INSTRUMENT PANEL/ INSTRUMENT PANEL CENTER BEZEL - INSTALLATION).

(4) Connect the battery negative cable.

HEATED SEAT ELEMENTS

DESCRIPTION

The heated seat system includes two seat heating elements in each front seat, one for the seat cushion and the other for the seat back. The two elements for each seat that are connected in series with the Heated Seat Module (HSM). The temperature sensor is a Negative Temperature Coefficient (NTC) thermistor. One temperature sensor is used for each seat, and it is located on the seat cushion heating element for all models.

The seat heating elements are attached to the seat cushion cover trim and seat back cover trim units. The heated seat elements and the temperature sensor cannot be adjusted or repaired and, if faulty or damaged, the seat element assembly must be replaced, (Refer to 8 - ELECTRICAL/HEATED SEATS/HEATED SEAT ELEMENT - REMOVAL).

OPERATION

The heated seat elements resist the flow of electrical current. When battery current is passed through the elements, the resistance of the elements to the current flow is released in the form of heat. The temperature sensor is a Negative Temperature Coefficient (NTC) thermistor. When the temperature of the seat cushion cover rises, the resistance of the sensor decreases. The heated seat module supplies a five-volt signal to one side of each sensor, and monitors the voltage drop through the sensor on a return circuit. The heated seat module uses this temperature sensor input to monitor the temperature of the seat, and regulates the current flow to the seat heating elements accordingly.

DIAGNOSIS AND TESTING

HEATED SEAT ELEMENTS

The wire harness connectors for the seat cushion and seat back heating elements are located under the seat, at the heated seat module. Refer to the appropriate wiring information for complete circuit schematic or connector pin-out information.

In order to access and test the heated seat elements it will be necessary to remove the appropriate front seat retaining bolts and lay the seat rearward, up against one of the rear seats. It is not necessary to disconnect the seat electrical connectors, just use care not to damage the attached wire harnesses while testing.

NOTE: When checking heated seat elements for continuity, be certain to move the heating element being checked. Moving the element, such as sitting in the seat will eliminate the possibility of an intermittent open in the element which would only be evident if the element was in a certain position. Failure to check the element in various positions could result in an incomplete test.

SEAT CUSHION ELEMENT

(1) From under the vehicle, remove the appropriate seats four retaining nuts.

(2) From inside the vehicle, pull the seat up, off the mounting studs and lay it back, up against one of the rear seats.

(3) Locate the heated seat module, attached to the bottom of the seat cushion pan. Remove the heated seat module from the seat cushion pan. Do not disconnect the electrical connectors at this time.

(4) Locate and disconnect the green 4-way electrical connector, connected to the heated seat module.

(5) Check for continuity between the two outboard circuit cavities of the wire harness connector (Pins

HEATED SEAT ELEMENTS (Continued)

1&4). There should be continuity. If OK, (Refer to 8 - ELECTRICAL/ELECTRONIC CONTROL MODULES/MEMORY HEATED SEAT/MIRROR MODULE - DIAGNOSIS AND TESTING) for complete system testing procedures. If not OK, install a replacement heated seat cushion element, (Refer to 8 - ELECTRICAL/HEATED SEATS/HEATED SEAT ELEMENT - INSTALLATION).

SEAT BACK ELEMENT

(1) From under the vehicle, remove the appropriate seats four retaining nuts.

(2) From inside the vehicle, pull the seat up and off the mounting studs and lay it back, up against one of the rear seats.

(3) Locate the heated seat module, attached to the bottom of the seat cushion pan. Remove the heated seat module from the seat cushion pan. Do not disconnect the electrical connectors at this time.

(4) Locate and disconnect the gray 2-way electrical connector, connected to the heated seat module.

(5) Check for continuity between the two circuit cavities of the 2-way wire harness connector. There should be continuity. If OK, (Refer to 8 - ELECTRICAL/ELECTRONIC CONTROL MODULES/MEMORY HEATED SEAT/MIRROR MODULE - DIAGNOSIS AND TESTING) for complete system testing procedures. If not OK, install a replacement heated seat back element, (Refer to 8 - ELECTRICAL/HEATED SEATS/HEATED SEAT ELEMENT - INSTALLATION).

REMOVAL

NOTE: Do not remove the factory installed heating elements from the seat or seat back cushions. The original element is permanently attached and cannot be removed without permanent damage. The replacement heating element is designed to be applied directly on top of the factory installed heating element.

(1) Disconnect and isolate the battery negative cable.

(2) Remove the appropriate seat cushion or seat back trim cover.

(3) Disconnect the inoperative heated seat cushion or seat back element electrical connectors (Fig. 6).

(4) Locate the wires leading from the inoperative heating element and cut them off flush with the edge of the original heating element.

INSTALLATION

(1) Peel off the adhesive backing on the back of the replacement heating element and stick directly on top of the factory installed heating element (Fig. 7).

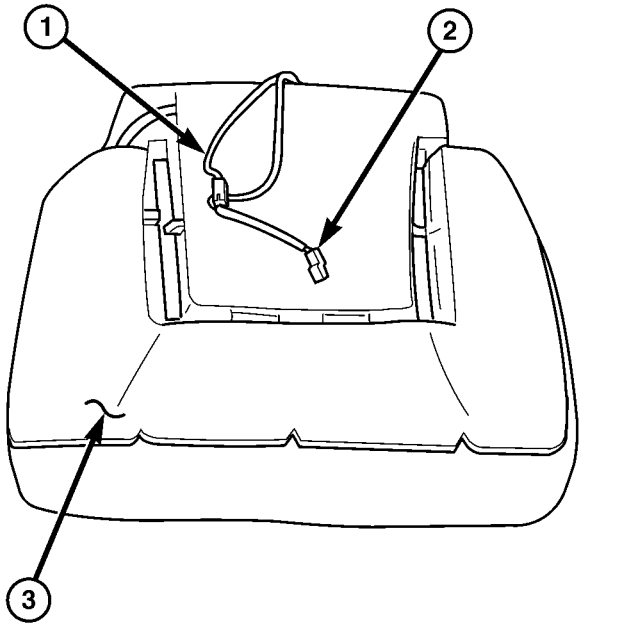

Fig. 6 HEATING ELEMENT INSTALLED - TYPICAL

1 - SEAT BACK WIRE HARNESS
2 - HEATED SEAT WIRE HARNESS CONNECTOR
3 - HEATED SEAT CUSHION ELEMENT

CAUTION: During the installation of the replacement heating element, be careful not to fold or crease the element assembly. Folds or creases will cause premature failure.

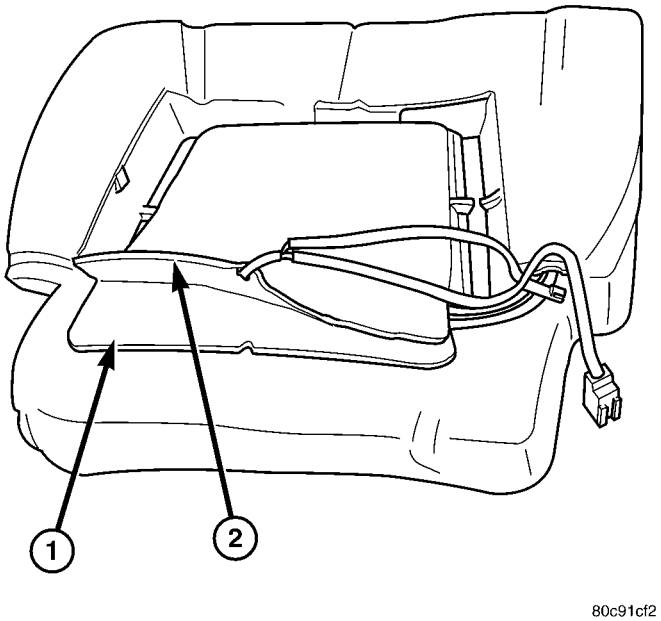

Fig. 7 HEATING ELEMENT INSTALLATION

1 - ORIGINAL (INOPERATIVE) HEATING ELEMENT
2 - REPLACEMENT HEATING ELEMENT

HEATED SEAT ELEMENTS (Continued)

(2) Connect the new heating element electrical connectors (Fig. 8). **Passenger seat shown, driver seat similar.**

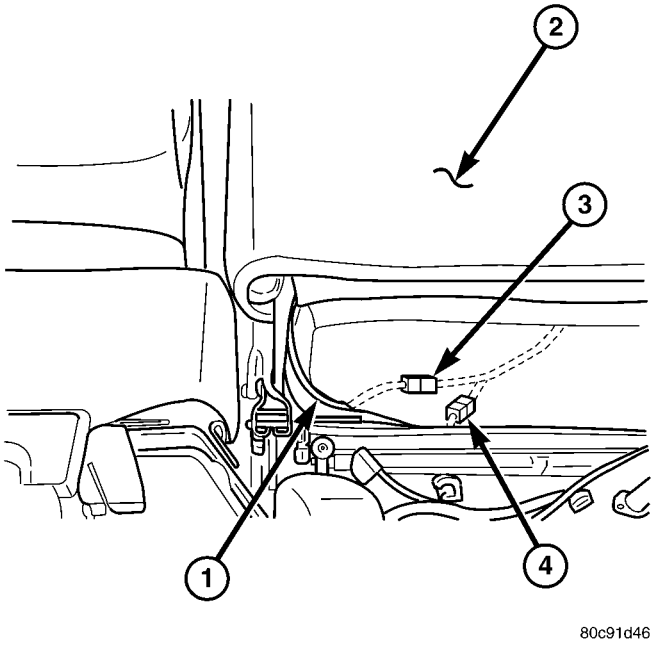

Fig. 8 HEATED SEAT WIRE HARNESS ROUTING

1 - SEAT BACK HEATED SEAT WIRE HARNESS
2 - PASSENGER SEAT BACK
3 - SEAT BACK ELEMENT CONNECTOR
4 - SEAT CUSHION ELEMENT CONNECTOR

(3) Connect the battery negative cable.

(4) Verify heated seat system operation.

(5) Install the appropriate seat cushion or seat back trim cover.

NOTE: Make certain the seat wire harness is correctly routed through the seat and seat back. The excess wire between the cushion and back elements should be securely tucked between the rear of the cushion foam and the rear carpet flap of the trim cover.

HEATED SEAT SENSOR

DESCRIPTION

Two heated seat sensors are used per vehicle, one in each front seat cushion heating element. The heated seat temperature sensor is a Negative Temperature Coefficient (NTC) thermistor.

The heated seat sensors cannot be repaired or adjusted and if found to be faulty, the complete heated seat cushion element must be replaced.

OPERATION

The temperature sensor is a Negative Temperature Coefficient (NTC) thermistor. When the temperature of the seat cushion cover rises, the resistance of the sensor decreases. The heated seat module supplies a five-volt current to one side of each sensor, and monitors the voltage drop through the sensor on a return circuit. The heated seat module uses this temperature sensor input to monitor the temperature of the seat, and regulates the current flow to the seat heating elements accordingly.

DIAGNOSIS AND TESTING

HEATED SEAT SENSOR

Refer to the appropriate wiring information for complete circuit schematic or connector pin-out information.

(1) Disconnect and isolate the battery negative cable. Disconnect the green 4-way heated seat module wire harness connector.

(2) Using an ohmmeter, check the resistance between cavities 2 and 3. The sensor resistance should be between 50 kilohms at 15° C (60° F) and 2 kilohms at 30° C (85° F). If not OK, replace the faulty seat element and sensor assembly.

HORN

TABLE OF CONTENTS

page

HORN SYSTEM
DESCRIPTION 1
OPERATION 1
DIAGNOSIS AND TESTING
HORN SYSTEM 1
HORN
DIAGNOSIS AND TESTING
HORN 3
REMOVAL 4
INSTALLATION 4
HORN SWITCH
DESCRIPTION 4

HORN SYSTEM

DESCRIPTION

WARNING: ON VEHICLES EQUIPPED WITH AIRBAG, REFER TO ELECTRICAL, RESTRAINTS FOR SAFETY PRECAUTIONS. DISCONNECT THE NEGATIVE CABLE FROM THE BATTERY BEFORE SERVICING COMPONENTS INVOLVING THE AIRBAG SYSTEM. ACCIDENTAL DEPLOYMENT OF AIRBAG AND PERSONAL INJURY CAN RESULT.

The horn circuit consists of a horn switch, clockspring, horn relay, horns and Integrated Power Module (IPM). The horn switch is a membrane switch located in the airbag trim cover. The horns are located forward of the left front wheel behind the bumper fascia.

OPERATION

The horn relay plugs into the Integrated Power Module (IPM) which is located in the engine compartment. For circuit information and component locations, refer to the appropriate wiring information. The wiring information includes wiring diagrams, proper wire and connector repair procedures, details of wire harness routing and retention, connector pinout information and location views for the various wire harness connectors, splices and grounds.

The horns will not function if the switch is “CLOSED” for more than 30 seconds. Once the switch is “OPEN”, a 20–30 second delay will occur before the horns are functional again.

DIAGNOSIS AND TESTING

HORN SYSTEM

WARNING: ON VEHICLES EQUIPPED WITH AIRBAGS, REFER TO ELECTRICAL, RESTRAINTS BEFORE ATTEMPTING ANY STEERING WHEEL, STEERING COLUMN, OR INSTRUMENT PANEL COMPONENT DIAGNOSIS OR SERVICE. FAILURE TO TAKE THE PROPER PRECAUTIONS COULD RESULT IN ACCIDENTAL AIRBAG DEPLOYMENT AND POSSIBLE PERSONAL INJURY.

Refer to Horn System Test below. If the horn does not sound, check horn fuse located in the Integrated Power Module (IPM). If the fuse is blown, replace with the correct fuse. If the horns fail to sound and the new fuse blows when depressing the horn switch, a short circuit in the horn or the horn wiring between the fuse terminal and the horn is responsible, or a defective horn switch allowed the horn to burn out is responsible.

If the fuse is OK, test horn relay.

If the relay is OK, test horn.

CAUTION: Continuous sounding of horn may cause horn failure.

Should the horn sound continuously, unplug the horn relay from IPM.

Refer to the appropriate wiring information.

HORN SYSTEM (Continued)

HORN SYSTEM TEST

CONDITION	POSSIBLE CAUSE	CORRECTION
HORN SOUNDS CONTINUOUSLY. NOTE: IMMEDIATELY UNPLUG HORN RELAY IN THE IPM.	(1) HORN RELAY INOPERATIVE.	(1) REPLACE RELAY.
	(2) HORN CONTROL CIRCUIT TO RELAY SHORTED TO GROUND.	(2) CHECK TERMINAL 85 IN IPM FOR CONTINUITY TO GROUND. IF CONTINUITY TO GROUND INDICATES: (A) STEERING WHEEL HORN SWITCH/ LEAD SHORTED TO GROUND. (B) WIRING HARNESS SHORTED TO GROUND. FIND THE SHORT AND REPAIR AS NECESSARY.
	(3) PINCHED HORN SWITCH WIRE UNDER DRIVER AIRBAG MODULE.	(3) REPLACE DRIVER AIRBAG TRIM COVER.
	(4) HORN SWITCH INOPERATIVE.	(4) REPLACE DRIVER AIRBAG TRIM COVER.
	(5) CLOCKSPRING INOPERATIVE.	(5) REPLACE CLOCKSPRING.
	(6) FRONT CONTROL MODULE INOPERATIVE.	(6) REFER TO ELECTRONIC CONTROL MODULES/FRONT CONTROL MODULE.
HORN SOUND INTERMITTENTLY AS THE STEERING WHEEL IS TURNED.	(1) HORN RELAY CONTROL CIRCUIT X3 IS SHORTED TO GROUND INSIDE STEERING COLUMN OR WHEEL.	(1) REMOVE DRIVER AIRBAG AND/OR WHEEL. CHECK FOR RUBBING OR LOOSE WIRE/CONNECTOR, REPAIR AS NECESSARY.
	(2) PINCHED HORN SWITCH WIRE UNDER DRIVER AIRBAG MODULE.	(2) REPLACE DRIVER AIRBAG TRIM COVER.
	(3) HORN SWITCH INOPERATIVE.	(3) REPLACE DRIVER AIRBAG TRIM COVER.
	(4) CLOCKSPRING INOPERATIVE.	(4) REPLACE CLOCKSPRING.
HORN DOES NOT SOUND	(1) CHECK FUSE 8 IN INTELLIGENT POWER MODULE.	(1) REPLACE FUSE IF BLOWN REPAIR AS NECESSARY.
	(2) NO VOLTAGE AT HORN RELAY TERMINALS 30 & 86, AND FUSE IS OK.	(2) NO VOLTAGE, REPAIR THE CIRCUIT AS NECESSARY.
	(3) OPEN CIRCUIT FROM TERMINAL 85 OF THE HORN RELAY TO HORN SWITCH, X3 CIRCUIT.	(3) REPAIR CIRCUIT AS NECESSARY.
	(4) HORN INOPERATIVE OR DAMAGED.	(4) CHECK VOLTAGE AT HORN WHEN HORN SWITCH IS PRESSED. IF NO VOLTAGE, REPLACE HORN.
	(5) HORN SWITCH INOPERATIVE.	(5) REPLACE DRIVER AIRBAG TRIM COVER.

HORN SYSTEM (Continued)

CONDITION	POSSIBLE CAUSE	CORRECTION
	(6) CLOCKSPRING INOPERATIVE.	(6) REPLACE CLOCKSPRING.
	(7) FRONT CONTROL MODULE INOPERATIVE.	(7) REFER TO ELECTRONIC CONTROL MODULES/FRONT CONTROL MODULE.
FUSE BLOWS WHEN HORN SOUNDS	(1) SHORT CIRCUIT IN HORN OR HORN WIRING.	(1) REMOVE HORN RELAY, CHECK FOR SHORTED HORN OR HORN WIRING. DISCONNECT HORN WIRE HARNESS TO ISOLATE SHORT AND REPAIR AS NECESSARY.
	(2) CLOCKSPRING INOPERATIVE.	(2) REPLACE CLOCKSPRING.
FUSE BLOWS WITHOUT BLOWING HORN	(1) SHORT CIRCUIT.	(1) REMOVE RELAY, INSTALL NEW FUSE, IF FUSE DOES NOT BLOW REPLACE HORN RELAY. IF FUSE BLOWS WITH RELAY REMOVED, CHECK FOR SHORT TO GROUND WITH OHMMETER ON CIRCUIT BETWEEN TERMINALS 30 & 86 AND THE FUSE TERMINAL. REPAIR AS NECESSARY.
	(2) CLOCKSPRING INOPERATIVE.	(2) REPLACE CLOCKSPRING.

HORN

DIAGNOSIS AND TESTING

HORN

HORN

(1) Disconnect wire connector at horn.

(2) Using a voltmeter, connect one lead to ground terminal and the other lead to the positive wire terminal (Fig. 1).

(3) Depress the horn switch, battery voltage should be present.

(4) If no voltage, refer to **HORNS WILL NOT SOUND**. If voltage is OK, go to step Step 5.

(5) Using ohmmeter, test ground wire for continuity to ground.

(6) If no ground repair as necessary.

(7) If wires test OK and horn does not sound, replace horn.

HORNS SOUND CONTINUOUSLY

CAUTION: Continuous sounding of horns may cause relay to fail.

The horn switch (membrane) sometimes can be the cause without the switch being depressed.

(1) Remove the horn relay from the intelligent power module.

(2) Using a continuity tester, test continuity from the X3 cavity of the horn relay to ground. Refer to the appropriate wiring information. The wiring information includes wiring diagrams, proper wire and connector repair procedures, details of wire harness routing and retention, connector pin-out information and location views for the various wire harness connectors, splices and grounds.

(a) If continuity is detected, proceed to step Step 3.

(b) If NO continuity, replace the horn relay.

(3) Remove the airbag trim cover from the steering wheel and disengage horn connector.

(4) Install horn relay into Integrated Power Module (IPM).

(a) If horn does not sound, replace airbag trim cover.

(b) If horn sounds, repair grounded X3 circuit from IPM to clockspring in the steering column.

HORNS WILL NOT SOUND

Check horn fuse # 8 in the IPM. If fuse is blown, check for a shorted switch in the airbag module. and refer to FUSE BLOWN section. If fuse is OK, refer to FUSE OK section.

FUSE BLOWN

(1) Verify condition of battery terminals and voltage, (Refer to 8 - ELECTRICAL/BATTERY SYSTEM

HORN (Continued)

- DIAGNOSIS AND TESTING). If battery connections and battery charge is OK proceed to Step 2.

(2) Using a voltmeter, test for battery voltage at both sides of horn fuse 7. If voltage is OK, on both sides of fuse, proceed to Fuse OK. If voltage is OK, on one side of fuse, the fuse is blown, proceed to Step 3.

(3) Using a suitable ammeter in place of the fuse, test amperage draw of the horn circuit. If amperage draw is greater than 20 amps without the horn switch depressed, a grounded circuit exists between the fuse and the horn relay. Proceed to Step 4. If amperage draw is greater than 20 amps with the horn switch depressed, a grounded circuit exists between the horn relay and the horn. Proceed to step Step 5.

(4) Remove the horn relay from the IPM. If the amperage draw drops to 0 amps, the horn switch or circuit is shorted. If the amperage draw does not drop to 0 amps, repair short at the IPM.

(5) Disengage a wire connector from one of the horns. If amperage drops and the connected horn sounds, replace the faulty horn. If amperage does not drop with both horns disconnected and the horn switch depressed, proceed to Step 6.

(6) Using a continuity tester, with the horns disconnected test continuity of the X2 cavity of the horn relay to ground. If continuity is detected, the circuit is grounded between the Junction Block and the horns. Locate and repair pinched harness.

FUSE OK

(1) Remove the horn relay from the intelligent power module.

(2) Using a continuity tester, Depress horn switch and test continuity from the X3 cavity of the horn relay to ground.

(a) If continuity is detected, proceed to Step 3.

(b) If NO continuity, proceed to Step 4.

(3) Using a suitable jumper wire, jump across the fuse F62 cavity and the X2 cavity of the horn relay in the Junction Block.

(a) If the horn sounds, replace the horn relay.

(b) If the horn does not sound, proceed to Step 4.

(4) Remove airbag trim cover from steering wheel. Refer to ELECTRICAL, RESTRAINTS.

(5) Test continuity across horn switch connectors with horn switch depressed.

(a) If continuity is detected, repair open circuit between the relay and the horn switch.

(b) If NO continuity, replace airbag trim cover.

(6) Install horn relay into intelligent power module.

(7) Disengage wire connectors from horns.

(8) Using a voltmeter, with the horn switch depressed test voltage across horn connector terminals of the wire harness (Fig. 1).

(a) If voltage is detected, replace horns.

(b) If NO voltage, proceed to step Step 9.

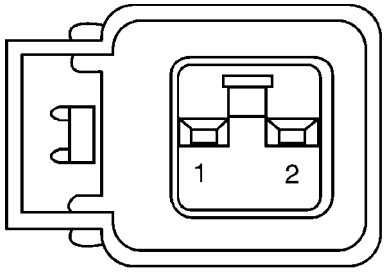

80b6f054

Fig. 1 Horn Connector

(9) With the horn switch depressed, test for voltage between the X2 circuit and ground.

(a) If voltage OK, repair system ground at right cowl area.

(b) If NO voltage, repair open X2 circuit between the relay and the horns.

REMOVAL

(1) Disconnect and isolate the battery negative cable.

(2) Hoist and support the front of the vehicle on safety stands.

(3) From behind the front fascia and forward of the left front wheel, disconnect the wire connectors from horn.

(4) Remove the mounting bracket attaching nut from the bottom of radiator closure panel. Do not remove the horn from mounting bracket.

(5) Separate the horn(s) from vehicle.

INSTALLATION

(1) Install the horns to the vehicle.

(2) Install the mounting bracket fastener.

(3) Reconnect the wire connectors to the horns.

(4) Lower the vehicle.

(5) Reconnect the battery negative cable.

HORN SWITCH

DESCRIPTION

The horn switch is molded into the airbag trim cover. The horn switch can not be serviced separately. For service procedures (Refer to 8 - ELECTRICAL/ RESTRAINTS/AIRBAG COVER - REMOVAL).

IGNITION CONTROL

TABLE OF CONTENTS

page

IGNITION CONTROL
DESCRIPTION - IGNITION SYSTEM 1
OPERATION - IGNITION SYSTEM 1
SPECIFICATIONS
TORQUE 2
SPARK PLUG CABLE RESISTANCE 2
SPARK PLUG 2
FIRING ORDER 3
AUTO SHUT DOWN RELAY
DESCRIPTION 3
OPERATION 3
CAMSHAFT POSITION SENSOR
DESCRIPTION 4
OPERATION 4
REMOVAL
REMOVAL - 2.4L 5
REMOVAL - 3.3/3.8L 5
INSTALLATION
INSTALLATION - 2.4L 6
INSTALLATION - 3.3/3.8L 6
IGNITION COIL
DESCRIPTION 6
OPERATION 6
REMOVAL
REMOVAL - 2.4L 7
REMOVAL - 3.3/3.8L 7
INSTALLATION
INSTALLATION - 2.4L 7
INSTALLATION - 3.3/3.8L 8
KNOCK SENSOR
DESCRIPTION 8
OPERATION 8
REMOVAL
REMOVAL - 2.4L 8
REMOVAL - 3.8L 8
INSTALLATION
INSTALLATION - 2.4L 8
INSTALLATION - 3.8L 8
SPARK PLUG
DESCRIPTION
DESCRIPTION - STANDARD 4 CYLINDER . . . 9
DESCRIPTION - PLATINUM PLUGS 9
REMOVAL 10
INSTALLATION 10
SPARK PLUG CABLE
DESCRIPTION 10
REMOVAL - 2.0/2.4L 10
INSTALLATION - 2.0/2.4L 10

IGNITION CONTROL

DESCRIPTION - IGNITION SYSTEM

NOTE: All engines use a fixed ignition timing system. Basic ignition timing is not adjustable. All spark advance is determined by the Powertrain Control Module (PCM).

The ignition system used on these engines is referred to as the Direct Ignition System (DIS). The system's three main components are the coils, crankshaft position sensor, and camshaft position sensor. If equipped with the coil on plug ignition system it utilizes an ignition coil for every cylinder, it is mounted directly over the each spark plug.

OPERATION - IGNITION SYSTEM

The crankshaft position sensor and camshaft position sensor are hall effect devices. The camshaft position sensor and crankshaft position sensor generate pulses that are inputs to the PCM. The PCM determines engine position from these sensors. The PCM calculates injector sequence and ignition timing from crankshaft & camshaft position. For a description of both sensors, refer to Camshaft Position Sensor and Crankshaft Position Sensor.

IGNITION CONTROL (Continued)

SPECIFICATIONS

TORQUE

DESCRIPTION	N·m	Ft. Lbs.	In. Lbs.
2.4L Target Magnet Screw	3		30
2.4L Camshaft Sensor Screw	12.9		115
3.3/3.8L Camshaft Sensor Screw	14.1		125
2.4L Ignition coil bolts	11.8		105
3.3/3.8LIgnition coil bolts	11.8		105
Spark Plugs	17.5	13	
Knock Sensor	10	7	

SPARK PLUG CABLE RESISTANCE

2.4L

CABLE	Maximum Resistance
1, 2, 3, & 4	10.8K ohms

3.3/3.8L

CABLE	Maximum Resistance
#1	22.5K ohms
#2	22.8K ohms
#3	19.3K ohms
#4	19.3K ohms
#5	13.6K ohms
#6	16.4K ohms

SPARK PLUG

Engine	Spark Plug	Gap	Thread Size
2.4L	RE14MCC5	0.048 TO 0.053	14mm (1 in.) reach

Engine	Spark Plug	Gap	Thread Size
3.3L	RE14PLP5	0.048 TO 0.053	14mm (1 in.) reach
3.8L	RE14PLP5	0.048 TO 0.053	14mm (1 in.) reach

IGNITION CONTROL (Continued)

FIRING ORDER

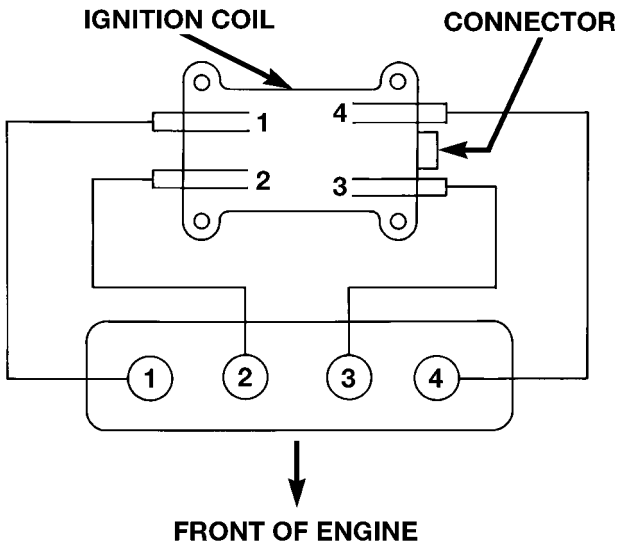

FIRING ORDER 1-3-4-2 8008a549

FIRING ORDER 2.4L

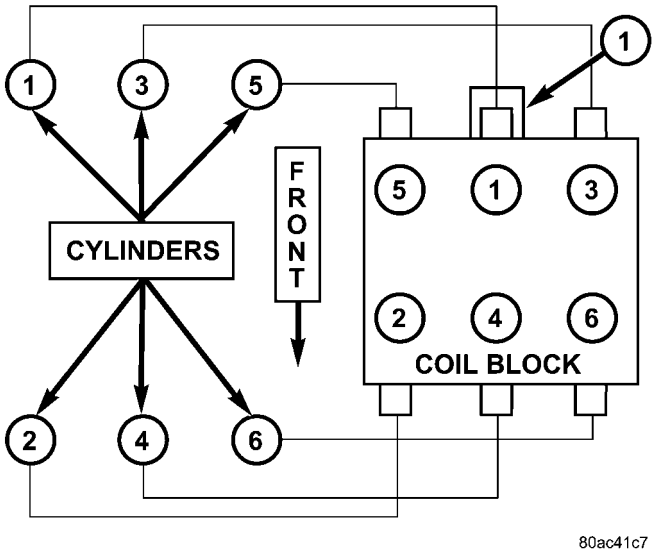

Firing Order 1-2-3-4-5-6 3.3/3.8L

1 - Electrical Connector

AUTO SHUT DOWN RELAY

DESCRIPTION

The relay is located in the Power Distribution Center (PDC). For the location of the relay within the PDC, refer to the PDC cover for location. Check electrical terminals for corrosion and repair as necessary

OPERATION

The engine switched battery (NGC vehicles) informs the PCM when the ASD relay energizes. A 12 volt signal at this input indicates to the PCM that the ASD has been activated. This input is also used to power certain drivers on NGC vehicles.

When energized, the ASD relay on NGC vehicles provides power to operate the injectors, ignition coil, generator field, O2 sensor heaters (both upstream and downstream), evaporative purge solenoid, EGR solenoid (if equipped) wastegate solenoid (if equipped), and NVLD solenoid (if equipped).

The ASD relay also provides a sense circuit to the PCM for diagnostic purposes. If the PCM does not receive 12 volts from this input after grounding the control side of the ASD relay, it sets a Diagnostic Trouble Code (DTC). The PCM energizes the ASD any time there is an engine speed that exceeds a predetermined value (typically about 50 rpm). The ASD relay can also be energized after the engine has been turned off to perform an O2 sensor heater test, if vehicle is equipped with OBD II diagnostics.

As mentioned earlier, the PCM energizes the ASD relay during an O2 sensor heater test. On NGC vehicles it checks the O2 heater upon vehicle start. The PCM still operates internally to perform several checks, including monitoring the O2 sensor heaters.

CAMSHAFT POSITION SENSOR

DESCRIPTION

The camshaft position sensor for the 3.3/3.8L is mounted in the front of the timing case cover (Fig. 6) and the camshaft position sensor for the 2.4L is mounted on the end of the cylinder head (Fig. 3).

OPERATION

The camshaft position sensor provides cylinder identification to the Powertrain Control Module (PCM) (Fig. 1). The sensor generates pulses as groups of notches on the camshaft sprocket pass underneath it (Fig. 2). The PCM keeps track of crankshaft rotation and identifies each cylinder by the pulses generated by the notches on the camshaft sprocket. Four crankshaft pulses follow each group of camshaft pulses.

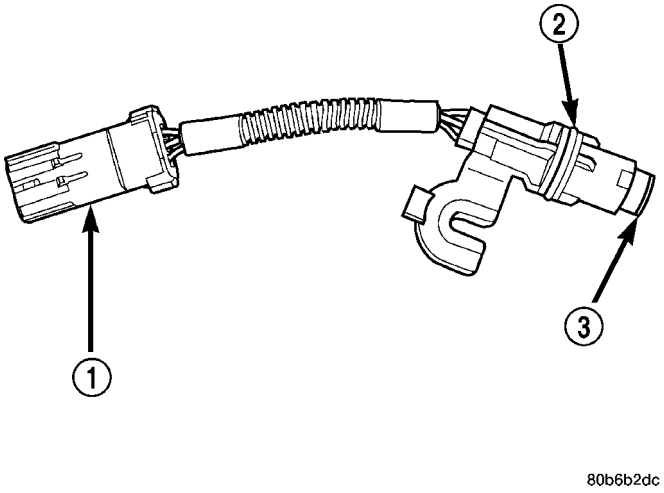

Fig. 1 Camshaft Position Sensor

1 - ELECTRICAL CONNECTOR
2 - O-RING
3 - PAPER SPACER

When the PCM receives 2 cam pulses followed by the long flat spot on the camshaft sprocket, it knows that the crankshaft timing marks for cylinder 1 are next (on driveplate). When the PCM receives one camshaft pulse after the long flat spot on the sprocket, cylinder number 2 crankshaft timing marks are next. After 3 camshaft pulses, the PCM knows cylinder 4 crankshaft timing marks follow. One camshaft pulse after the 3 pulses indicates cylinder 5. The 2 camshaft pulses after cylinder 5 signals cylinder 6 (Fig. 2). The PCM can synchronize on cylinders 1 or 4.

When metal aligns with the sensor, voltage goes low (less than 0.3 volts). When a notch aligns with the sensor, voltage switches high (5.0 volts). As a group of notches pass under the sensor, the voltage switches from low (metal) to high (notch) then back to low. The number of notches determine the amount of pulses. If available, an oscilloscope can display the square wave patterns of each timing event.

Top Dead Center (TDC) does not occur when notches on the camshaft sprocket pass below the sensor. TDC occurs after the camshaft pulse (or pulses) and after the 4 crankshaft pulses associated with the particular cylinder. The arrows and cylinder call outs on (Fig. 2) represent which cylinder the flat spot and notches identify, they do not indicate TDC position.

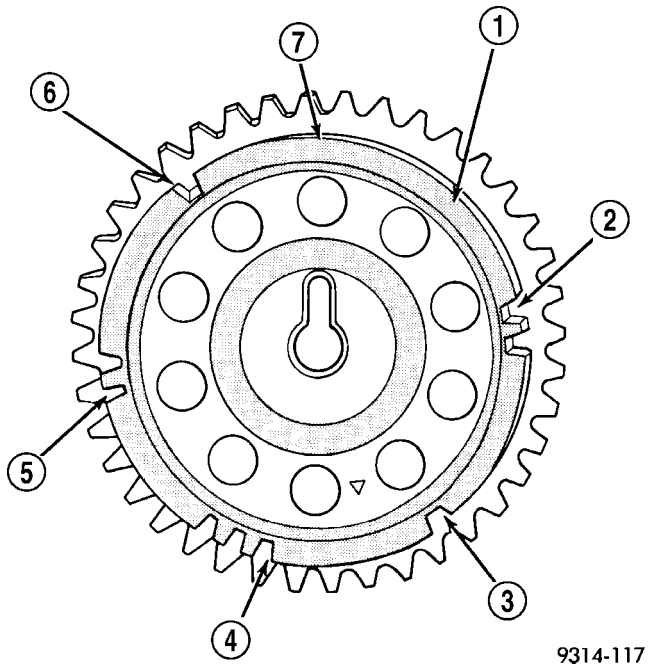

Fig. 2 Camshaft Sprocket

1 - CAMSHAFT SPROCKET
2 - CYL #6
3 - CYL #5
4 - CYL #4
5 - CYL #3
6 - CYL #2
7 - CYL #1

CAMSHAFT POSITION SENSOR (Continued)

REMOVAL

REMOVAL - 2.4L

The camshaft position sensor is mounted to the rear of the cylinder head.

(1) Remove the negative battery cable.

(2) Disconnect electrical connectors from the camshaft position sensor (Fig. 3).

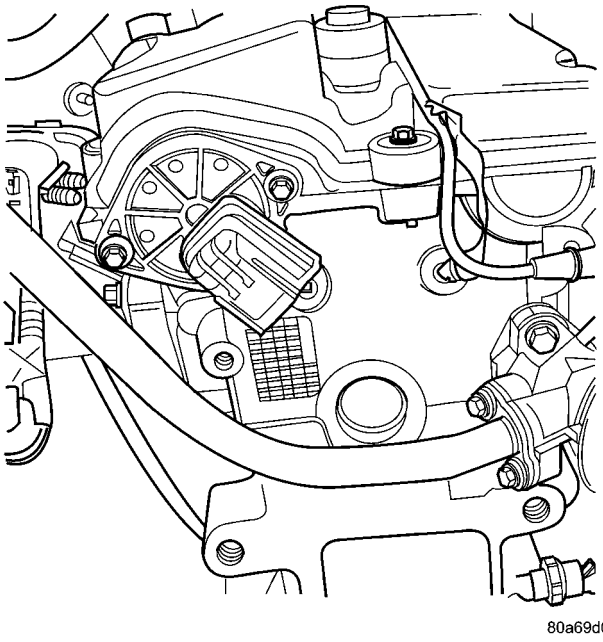

Fig. 3 EGR/CAM SENSOR 2.4L

(3) Remove camshaft position sensor mounting screws. Remove sensor.

(4) Loosen screw attaching target magnet to rear of camshaft and remove magnet (Fig. 4).

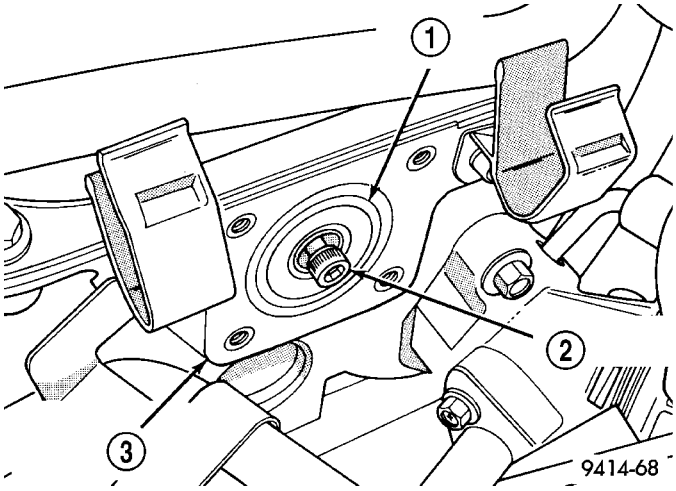

Fig. 4 Target Magnet Removal/Installation

1 - TARGET MAGNET
2 - MOUNTING BOLT
3 - REAR OF CYLINDER HEAD

REMOVAL - 3.3/3.8L

(1) Disconnect the negative battery cable.

(2) Remove the air box cover and inlet tube (Fig. 5).

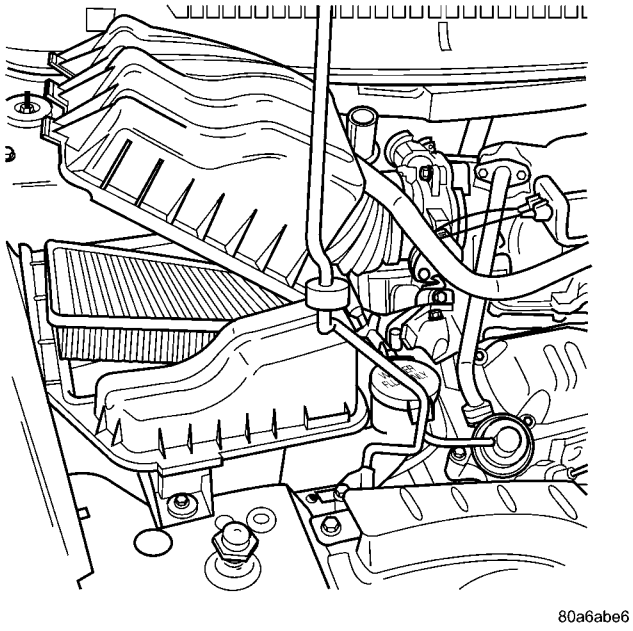

Fig. 5 AIR BOX COVER

(3) Disconnect camshaft position sensor electrical connector from the wiring harness connector (Fig. 6).

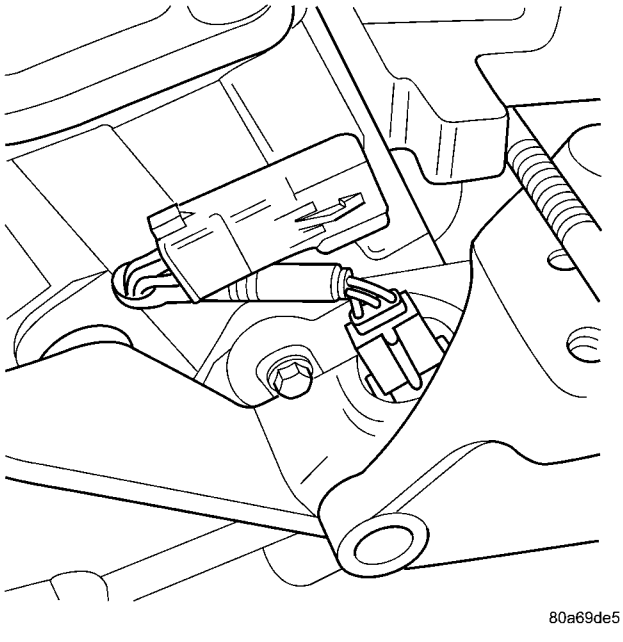

Fig. 6 CAMSHAFT POSITION SENSOR

(4) Remove bolt holding sensor.

(5) Rotate sensor away from block.

CAMSHAFT POSITION SENSOR (Continued)

(6) Pull sensor up out of the chain case cover. **Do not pull on the sensor wiring.** There is an O-ring on the body of the sensor. The O-ring may make removal difficult. A light tap to top of sensor prior to removal may reduce force needed for removal.

INSTALLATION

INSTALLATION - 2.4L

The target magnet has locating dowels that fit into machined locating holes in the end of the camshaft (Fig. 7).

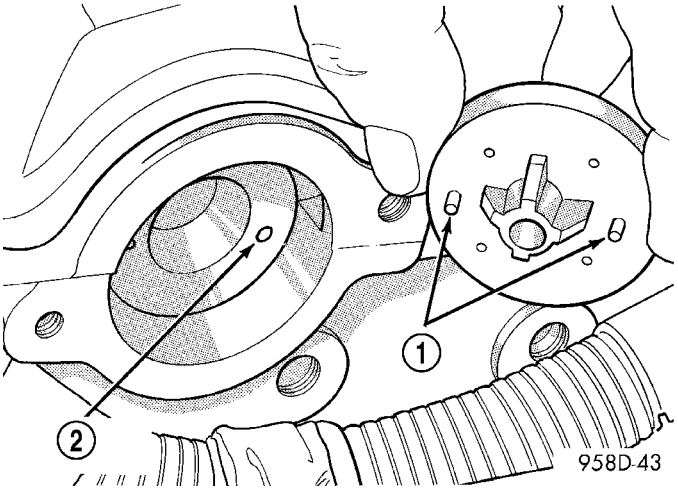

Fig. 7 Target Magnet Installation

1 - LOCATING DOWELS
2 - LOCATING HOLES (2)

(1) Install target magnet in end of camshaft. Tighten mounting screw to 3 N·m (30 in. lbs.) torque. Over torqueing could cause cracks in magnet. If magnet cracks replace it.

(2) Install camshaft position sensor. Tighten sensor mounting screws to 12.9 N·m (115 in. lbs.) torque.

(3) Carefully attach electrical connector to camshaft position sensor.

(4) Connect the negative battery cable.

INSTALLATION - 3.3/3.8L

If the removed sensor is reinstalled, clean off the old spacer on the sensor face. A NEW SPACER must be attached to the face before installation. Inspect O-ring for damage, replace if necessary. If the sensor is being replaced, confirm that the paper spacer is attached to the face and O-ring is positioned in groove of the new sensor (Fig. 8).

(1) Apply a couple drops of clean engine oil to the O-ring prior to installation.

(2) Install sensor in the chain case cover and rotate into position.

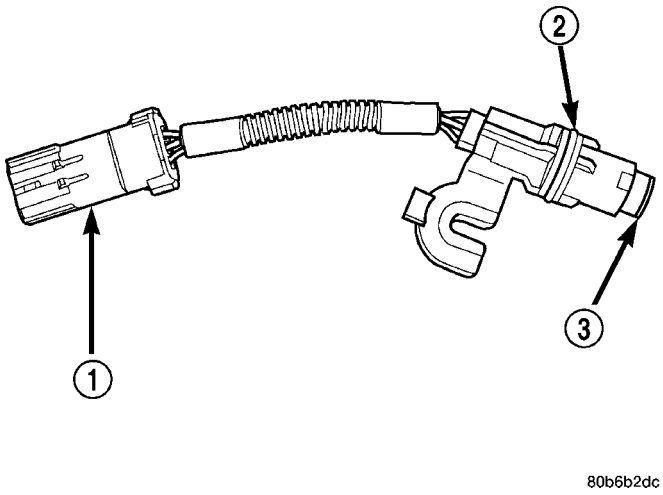

Fig. 8 Camshaft Position Sensor and Spacer

1 - ELECTRICAL CONNECTOR
2 - O-RING
3 - PAPER SPACER

(3) Push sensor down until contact is made with the camshaft gear. While holding the sensor in this position, install and tighten the retaining bolt 14 N·m (125 in. lbs.) torque.

(4) Connect camshaft position sensor electrical connector to harness connector.

(5) Install the air box cover and inlet hose (Fig. 5).

(6) Connect the negative battery cable.

IGNITION COIL

DESCRIPTION

The ignition coil assembly consists of 2 or 3 independent coils molded together (Fig. 9) or (Fig. 10). The coil assembly for the 3.3/3.8L is mounted on the intake manifold. The coil assembly for the 2.4L is mounted on the cylinder head cover. Spark plug cables route to each cylinder from the coil.

OPERATION

The coil fires two spark plugs every power stroke. One plug is the cylinder under compression, the other cylinder fires on the exhaust stroke. The Powertrain Control Module (PCM) determines which of the coils to charge and fire at the correct time.

The Auto Shutdown (ASD) relay provides battery voltage to the ignition coil. The PCM provides a ground contact (circuit) for energizing the coil. When the PCM breaks the contact, the magnetic energy in the coil transfers to the secondary causing the spark. The PCM will de-energize the ASD relay if it does not receive the crankshaft position sensor and camshaft position sensor inputs. Refer to Auto Shutdown (ASD) Relay—PCM Output, in this section for relay operation.

IGNITION COIL (Continued)

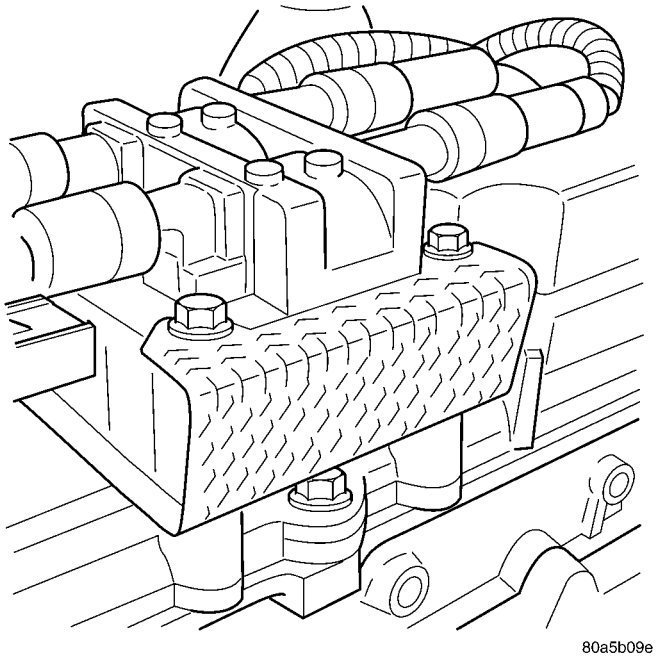

Fig. 9 IGNITION COIL - 2.4L

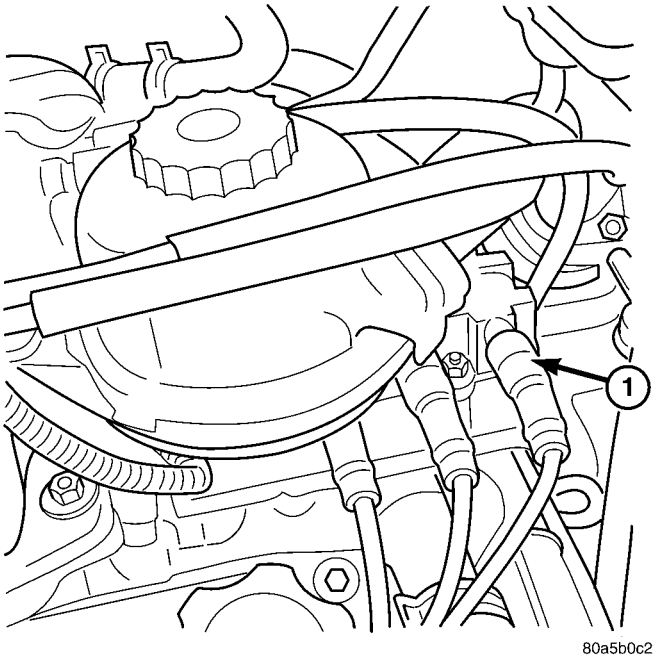

Fig. 10 IGNITION COIL - 3.3/3.8L

1 -Ignition Coil

REMOVAL

REMOVAL - 2.4L

The electronic ignition coil pack attaches directly to the valve cover.

(1) Diconnect the negative battery cable.
(2) Disconnect electrical connector from coil pack.
(3) Remove coil pack mounting bolts.
(4) Remove coil pack and heat shield (Fig. 9).

REMOVAL - 3.3/3.8L

(1) Disconnect the negative battery cable.
(2) Remove the throttle and speed control cables from clip.
(3) Remove 2 bolts from the Power steering reservoir to intake manifold.
(4) Loosen the lower nut for the power steering reservoir from stud on ignition coil bracket.
(5) Reposition the Power steering reservoir (Fig. 11).

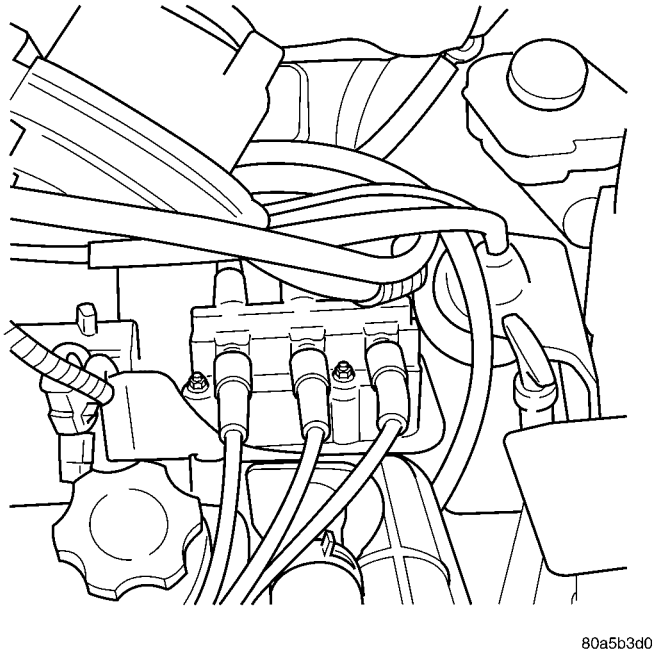

Fig. 11 IGNITION COIL BRACKET 3.3/3.8L

(6) Remove the ignition cables from the ignition coil.
(7) Disconnect the electrical connector from the ignition coil.
(8) Remove 2 nuts from the ignition coil studs.

INSTALLATION

INSTALLATION - 2.4L

(1) Install ignition coil and heat shield to valve cover and tighten bolts.
(2) Connect the electrical connector to the ignition coil.
(3) Transfer spark plug cables to new coil pack. The coil pack towers are numbered with the cylinder identification. Be sure the ignition cables are fully seated onto the towers.
(4) Connect the negative battery cable.

IGNITION COIL (Continued)

INSTALLATION - 3.3/3.8L

(1) Install coil over studs on bracket.
(2) Install 2 nuts to the ignition coil studs. Tighten nuts and bolts.
(3) Connect the electrical connector to the ignition coil.
(4) Install the ignition cables to the ignition coil.
(5) Reposition the Power steering reservoir. Slide bracket over the mounting stud (Fig. 11).
(6) Install 2 bolts to the Power steering reservoir to intake manifold.
(7) Tighten the lower nut to stud on ignition coil bracket.
(8) Install the throttle and speed control cables to clip.
(9) Connect the negative battery cable.

KNOCK SENSOR

DESCRIPTION

The knock sensor threads into the cylinder block. The knock sensor is designed to detect engine vibration that is caused by detonation.

OPERATION

When the knock sensor detects a knock in one of the cylinders, it sends an input signal to the PCM. In response, the PCM retards ignition timing for all cylinders by a scheduled amount.

Knock sensors contain a piezoelectric material which constantly vibrates and sends an input voltage (signal) to the PCM while the engine operates. As the intensity of the crystal's vibration increases, the knock sensor output voltage also increases.

The voltage signal produced by the knock sensor increases with the amplitude of vibration. The PCM receives as an input the knock sensor voltage signal. If the signal rises above a predetermined level, the PCM will store that value in memory and retard ignition timing to reduce engine knock. If the knock sensor voltage exceeds a preset value, the PCM retards ignition timing for all cylinders. It is not a selective cylinder retard.

The PCM ignores knock sensor input during engine idle conditions. Once the engine speed exceeds a specified value, knock retard is allowed.

Knock retard uses its own short term and long term memory program.

Long term memory stores previous detonation information in its battery-backed RAM. The maximum authority that long term memory has over timing retard can be calibrated.

Short term memory is allowed to retard timing up to a preset amount under all operating conditions (as long as rpm is above the minimum rpm) except WOT. The PCM, using short term memory, can respond quickly to retard timing when engine knock is detected. Short term memory is lost any time the ignition key is turned off.

NOTE: Over or under tightening affects knock sensor performance, possibly causing improper spark control.

REMOVAL

REMOVAL - 2.4L

The knock sensor threads into the side of the cylinder block in front of the starter (Fig. 12).
(1) Disconnect electrical connector from knock sensor.
(2) Use a crow foot socket to remove the knock sensors.

REMOVAL - 3.8L

The knock sensor threads into the side of the cylinder block in the rear.
(1) Disconnect the negative battery cable.
(2) Raise vehicle and support.
(3) On All Wheel Drive vehicles remove the PTU (Power Transfer Unit), refer to the Transmission section for more information.
(4) Disconnect electrical connector from knock sensor.
(5) Use a crow foot socket to remove the knock sensor.

INSTALLATION

INSTALLATION - 2.4L

The knock sensor threads into the side of the cylinder block in front of the starter (Fig. 12).
(1) Install knock sensor. Tighten knock sensor to 10 N·m (7 ft. lbs.) torque. **Over or under tightening effects knock sensor performance, possibly causing improper spark control.**
(2) Attach electrical connector to knock sensor.

INSTALLATION - 3.8L

The knock sensor threads into the side of the cylinder block in the rear.
(1) Install knock sensor. Tighten knock sensor to 10 N·m (7 ft. lbs.) torque. **Over or under tightening effects knock sensor performance, possibly causing improper spark control.**
(2) Attach electrical connector to knock sensor.
(3) On All Wheel Drive vehicles install the PTU (Power Transfer Unit) for the rear wheels, refer to the Transmission section for more information.

KNOCK SENSOR (Continued)

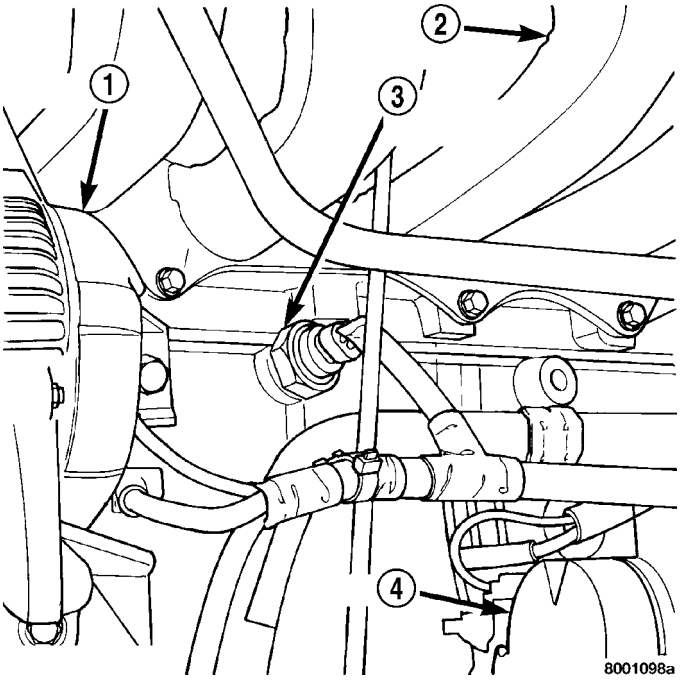

Fig. 12 Knock Sensor

1 - GENERATOR
2 - INTAKE MANIFOLD
3 - KNOCK SENSOR
4 - STARTER

(4) Lower vehicle.
(5) Connect the negative cable.

SPARK PLUG

DESCRIPTION

DESCRIPTION - STANDARD 4 CYLINDER

All engines use resistor spark plugs. They have resistance values ranging from 6,000 to 20,000 ohms when checked with at least a 1000 volt spark plug tester.

Do not use an ohm meter to check the resistance of the spark plugs. This will give an inaccurate reading.

Refer to the Specifications section for gap and type of spark plug.

DESCRIPTION - PLATINUM PLUGS

The V6 engines use platinum resistor spark plugs. They have resistance values of 6,000 to 20,000 ohms when checked with at least a 1000 volt tester. For spark plug identification and specifications, Refer to the Specifications section.

Do not use an ohm meter to check the resistance of the spark plugs. This will give an inaccurate reading.

When the spark plugs use a single or double platinum tips and they have a recommended service life of 100,000 miles for normal driving conditions per schedule A in this manual. The spark plugs have a recommended service life of 75,000 miles for severe driving conditions per schedule B in this manual. A thin platinum pad is welded to both or just the center electrode end(s) as shown in (Fig. 13). Extreme care must be used to prevent spark plug cross threading, mis-gapping (Fig. 14) and ceramic insulator damage during plug removal and installation.

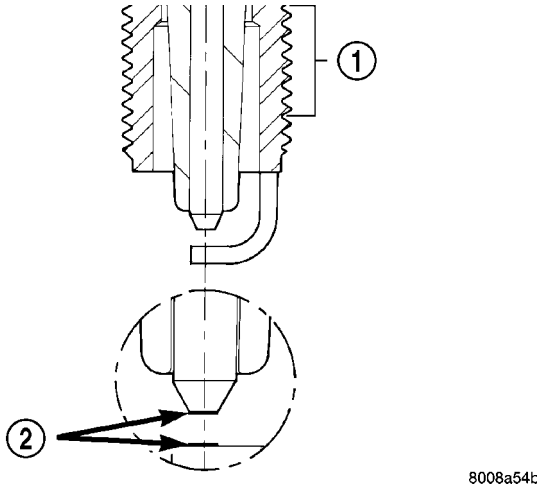

Fig. 13 Platinum Pads

1 - APPLY ANTI-SEIZE COMPOUND HERE ONLY
2 - PLATINUM SPARK SURFACE

CAUTION: Cleaning of the platinum plug may damage the platinum tip.

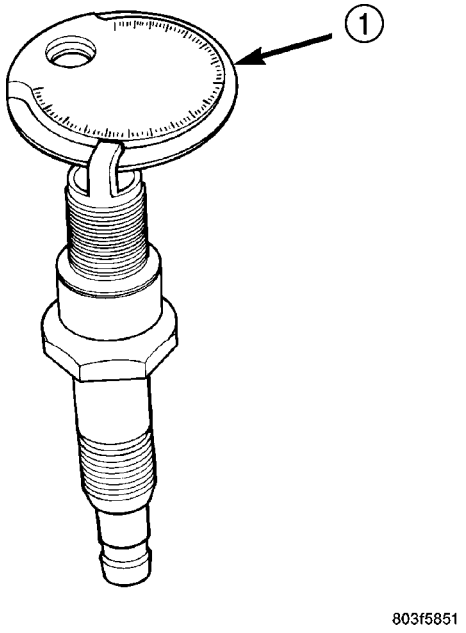

Fig. 14 Setting Spark Plug Electrode Gap

1 - TAPER GAUGE

SPARK PLUG (Continued)

REMOVAL

When replacing the spark plugs and spark plug cables, route the cables correctly and secure them in the appropriate retainers. Failure to route the cables properly can cause the radio to reproduce ignition noise, cross ignition of the spark plugs or **short circuit the cables to ground.**

Always remove cables by grasping at the boot, rotating the boot 1/2 turn, and pulling straight back in a steady motion.

(1) Prior to removing the spark plug, spray compressed air around the spark plug hole and the area around the spark plug.

(2) Remove the spark plug using a quality socket with a foam insert.

(3) Inspect the spark plug condition.

INSTALLATION

When replacing the spark plugs and spark plug cables, route the cables correctly and secure them in the appropriate retainers. Failure to route the cables properly can cause the radio to reproduce ignition noise, cross ignition of the spark plugs or **short circuit the cables to ground.**

(1) Coat threads of spark plug with anti-seize. Be sure not to get anti-seize **ANYWHERE BUT ON THE THREADS OF THE SPARK PLUG as shown in (Fig. 13)**.

(2) To avoid cross threading, start the spark plug into the cylinder head by hand.

(3) Tighten spark plugs to 17.5 N·m (13 ft. lbs.) torque.

(4) Install spark plug cables over spark plugs. A click will be heard and felt when the cable properly attaches to the spark plug.

SPARK PLUG CABLE

DESCRIPTION

Spark Plug cables are sometimes referred to as secondary ignition wires. The wires transfer electrical current from the ignition coil pack to individual spark plugs at each cylinder. The resistive spark plug cables are of nonmetallic construction. The cables provide suppression of radio frequency emissions from the ignition system.

Check the spark plug cable connections for good contact at the coil, and spark plugs. Terminals should be fully seated. The insulators should be in good condition and should fit tightly on the coil, and spark plugs. Spark plug cables with insulators that are cracked or torn must be replaced.

Clean Spark Plug cables with a cloth moistened with a non-flammable solvent. Wipe the cables dry. Check for brittle or cracked insulation. The spark plug cables and spark plug boots are made from high temperature materials.

REMOVAL - 2.0/2.4L

Failure to route the cables properly could cause the radio to reproduce ignition noise, cross ignition of the spark plugs or short circuit the cables to ground.

Remove spark plug cable from coil first.

Always remove the spark plug cable by grasping the top of the spark plug insulator, turning the boot 1/2 turn and pulling straight up in a steady motion.

INSTALLATION - 2.0/2.4L

Failure to route the cables properly could cause the radio to reproduce ignition noise, cross ignition of the spark plugs or short circuit the cables to ground. Install spark plug insulators over spark plugs. Ensure the top of the spark plug insulator covers the upper end of the spark plug tube, then connect the other end to coil pack.

INSTRUMENT CLUSTER

TABLE OF CONTENTS

page

INSTRUMENT CLUSTER
DESCRIPTION 1
OPERATION 1
DIAGNOSIS AND TESTING
DIAGNOSIS AND TESTING - SELF-DIAGNOSTICS 2
DIAGNOSIS AND TESTING - CLUSTER DIAGNOSIS 3
REMOVAL 11
INSTALLATION 11
CLUSTER LENS
REMOVAL 11
INSTALLATION 11

INSTRUMENT CLUSTER

DESCRIPTION

The instrumentation gauges are contained in a subdial assembly within the instrument cluster. The individual gauges are not serviceable. If one of the cluster gauges becomes faulty, the entire cluster would require replacement.

The Mechanical Instrument Cluster (MIC) with a tachometer is equipped with a electronic vacuum fluorescent transmission range indicator (PRND3L), odometer, and trip odometer display.

The MIC without a tachometer is equipped with a Light Emitting Diode (LED) transmission range indicator (PRND3L) and a vacuum fluorescent odometer display.

The MIC is equipped with the following warning lamps.

- Lift Gate Ajar
- Low Fuel Level
- Low Windshield Washer Fluid Level
- Cruise
- Battery Voltage
- Fasten Seat Belt
- Door Ajar
- Coolant Temperature
- Anti-Lock Brake
- Brake
- Oil Pressure
- MIL (Malfunction Indicator Lamp)
- VTSS/SKIS Indicator
- Airbag
- Traction Control
- Autostick

Export Only - uses a message center that displays the following telltales:

- Turns Signals
- High Beam
- Tire Pressure Monitoring (TPM)
- Glow Plug (Export Only)
- Supplemental Cabin Heater (Export Only)

WATER IN FUEL LAMP - EXPORT

The Water In Fuel Lamp is located in the message center. When moisture is found within the fuel system, the sensor sends a message via the PCI data bus to the instrument cluster. The MIC illuminates the bulb in the message center, The sensor is located underneath the vehicle, directly above the rear axle. The sensor is housed within the fuel filter/water separator assembly cover. The sensor is not serviced separately. If found defective, the entire assembly cover must be replaced.

OPERATION

Refer to the vehicle Owner's Manual for operation instructions and conditions for the Instrument Cluster Gauges.

WATER IN FUEL LAMP/SENSOR - EXPORT

The Water In Fuel Sensor is a resistive type switch. It is calibrated to sense the different resistance between diesel fuel and water. When water enters the fuel system, it is caught in the bottom of the fuel filter/water separator assembly, where the sensor is located. Water has less resistance than diesel fuel. The sensor then sends a PCI data bus message to the instrument cluster to illuminate the lamp.

If the lamp is inoperative, perform the self diagnostic test on the instrument cluster to check the lamp operation before continuing diagnosis.

INSTRUMENT CLUSTER (Continued)

DIAGNOSIS AND TESTING

DIAGNOSIS AND TESTING - SELF-DIAGNOSTICS

The instrument clusters are equipped with a self diagnostic test feature to help identify electronic problems. Prior to any test, perform the Self-Diagnostic Test. The self diagnostic system displays instrument cluster stored fault codes in the odometer display, sweeps the gauges to the calibration points, and bulb checks the warning indicators. When the key is in the ON position with the engine not running, the MIL will remain illuminated for regulatory purposes.

To activate the Self-Diagnostic program:

(1) With the ignition switch in the OFF position, depress the TRIP ODOMETER RESET button.

(2) Continue to hold the TRIP ODOMETER RESET button until **Sof** and a number (software version number (i.e. **Sof 3.2**) appears in the odometer window then release the button. If a fault code is present, the cluster will display it in the odometer display. When all fault codes have been displayed, the cluster will display **"end"** in the odometer display. Refer to the INSTRUMENT CLUSTER DTC'S table to determine what each trouble code means.

INSTRUMENT CLUSTER DTC'S

DTC	DESCRIPTION
100.0	LOOP-BACK FAILURE
100.1	ABS COMMUNICATION FAULT
100.2	BCM COMMUNICATION FAULT
100.3	EATX COMMUNICATION FAULT
100.4	FCM COMMUNICATION FAULT
100.5	ORC COMMUNICATION FAULT
100.6	SBEC/DEC/MCM COMMUNICATION FAULT
200.0	AIRBAG LED SHORT
200.1	AIRBAG LED OPEN
200.2	ABS LED SHORT
200.3	ABS LED OPEN
200.6	EL INVERTER TIME-OUT
200.7	EATX MISMATCH
400.0	EEPROM READ/WRITE FAILURE
400.1	IMPROPER POWER DOWN DETECTED

CALIBRATION TEST

The CLUSTER CALIBRATION table contains the proper calibration points for each gauge. If the gauge pointers are not calibrated, a problem exists in the cluster. If any gauge is out of calibration, replace the cluster.

CLUSTER CALIBRATION

SPEEDOMETER	CALIBRATION POINT
1	0 MPH (0 KM/H)
2	20 MPH (40 KM/H)
3	60 MPH (100 KM/H)
4	100 MPH (160 KM/H)
TACHOMETER	
1	0 RPM
2	1000 RPM
3	3000 RPM
4	6000 RPM
FUEL GAUGE	
1	EMPTY
2	1/4 FILLED
3	1/2 FILLED
4	FULL
TEMPERATURE GAUGE	
1	COLD
2	1/4
3	3/4
4	HOT

ODOMETER SEGMENT TEST

If a segment in the odometer does not illuminate normally, a problem exists in the display.

ELECTRONIC TRANSMISSION RANGE INDICATOR SEGMENT TEST

If a segment in the transmission range indicator does not illuminate normally, a problem exists in the display.

INSTRUMENT CLUSTER (Continued)

DIAGNOSIS AND TESTING - CLUSTER DIAGNOSIS

CONDITIONS

Refer to the following tables for possible problems, causes, and corrections.

- INSTRUMENT CLUSTER DIAGNOSIS
- SPEEDOMETER DIAGNOSIS
- TACHOMETER DIAGNOSIS
- FUEL GAUGE DIAGNOSIS
- TEMPERATURE GAUGE DIAGNOSIS
- ODOMETER DIAGNOSIS
- ELECTRONIC GEAR INDICATOR DISPLAY DIAGNOSIS

NOTE: Always check the functionality of the cluster by running the self test prior to troubleshooting.

INSTRUMENT CLUSTER DIAGNOSIS

CONDITION	POSSIBLE CAUSES	CORRECTION
INSTRUMENT CLUSTER INOPERATIVE. NO RESPONSE FROM INSTRUMENT CLUSTER.	NO PCI BUS MESSAGES FROM THE BCM.	USE A DRB III® SCAN TOOL TO CHECK THE BCM. IF OK, LOOK FOR ANOTHER POSSIBLE CAUSE FOR CLUSTER FAILURE. IF NOT OK, REFER TO THE PROPER BODY DIAGNOSTIC PROCEDURES MANUAL.
	SPREAD TERMINAL(S) ON WIRING HARNESS CLUSTER CONNECTOR.	REMOVE CLUSTER FROM INSTRUMENT PANEL AND CHECK WIRING HARNESS CONNECTOR FOR SPREAD TERMINAL. IF OK, LOOK FOR ANOTHER POSSIBLE CAUSE FOR THE CLUSTER FAILURE. IF NOT OK, REPAIR CONNECTOR.
	BCM IS NOT RECEIVING PROPER INPUT FROM THE IGNITION SWITCH.	1. USE A DRB III® SCAN TOOL TO VERIFY IGNITION SWITCH STATUS INTO THE BCM. IF NOT OK, GO TO STEP (2). IF OK, LOOK AT ANOTHER POSSIBLE CAUSE OF FAILURE. 2. CHECK IGNITION SWITCH FUNCTION AND WIRING.
	INTERNAL CLUSTER FAILURE.	REPLACE CLUSTER.
	WAKE UP CIRCUIT FAULTY.	VERIFY CONTINUITY OF WAKE UP CIRCUIT FROM BCM TO MIC. CIRCUIT SHALL BE LOW WHENEVER BCM IS AWAKE.
	POWER OR GROUND MISSING.	IF NO RESPONSE FROM THE MIC, CHECK FOR POWER AND GROUND AT THE MIC CONNECTOR. REFER TO WIRING DIAGRAMS FOR CONNECTOR CALL OUTS.

INSTRUMENT CLUSTER (Continued)

SPEEDOMETER DIAGNOSIS

CONDITION	POSSIBLE CAUSES	CORRECTION
NO POINTER MOVEMENT.	1. INTERNAL CLUSTER FAILURE.	1.A. PERFORM CLUSTER SELF-DIAGNOSTIC TEST AND CHECK FOR FAULT CODES. • IF SPEEDOMETER POINTER MOVES TO CALIBRATION POINTS DURING TEST LOOK FOR ANOTHER POSSIBLE CAUSE OF FAILURE. • IF THE POINTER DOESN'T MOVE DURING TEST, CHECK FOR POWER AND GROUND TO THE MIC. IF POWER AND GROUND ARE PRESENT GO TO STEP 1.B. 1.B. REPLACE CLUSTER. GO TO STEP 1.C. 1.C. CONNECT CLUSTER INTO INSTRUMENT PANEL WIRING HARNESS. PLACE IT BACK INTO THE PROPER POSITION IN THE INSTRUMENT PANEL. PUT IN THE TOP FOUR MOUNTING SCREWS AND SECURE THE CLUSTER TO THE INSTRUMENT PANEL.
	2. NO SPEED PCI BUS MESSAGE OR ZERO MPH PCI SPEED BUS MESSAGE.	2.A. CHECK THE PCM (CODE 10) USING A DRB III® SCAN TOOL. IF OK, GO TO STEP 2.B. IF NOT OK, REFER TO THE PROPER POWERTRAIN DIAGNOSTIC PROCEDURES MANUAL TO REPAIR THE PCM. 2.B. CHECK THE SPEED SIGNAL INPUT INTO THE PCM. THE SPEED SIGNAL ORIGINATES FROM THE TCM FOR VEHICLES WITH THE 4 SPEED ELECTRONIC TRANSMISSIONS. CHECK CONTINUITY FROM TCM TO PCM. IF OK, USE A DRB III® SCAN TOOL TO CHECK TCM. REFER TO THE PROPER TRANSMISSION DIAGNOSTIC PROCEDURES MANUAL TO REPAIR THE TCM. IF NOT OK, REPAIR WIRING.

INSTRUMENT CLUSTER (Continued)

CONDITION	POSSIBLE CAUSES	CORRECTION
ERRATIC POINTER MOVEMENT.	1. ERRATIC MESSAGE FROM ANOTHER MODULE.	1.A. CHECK THE BCM USING A DRB III® SCAN TOOL IF OK, GO TO STEP 1.B. IF NOT OK, REFER TO THE PROPER BODY DIAGNOSTIC PROCEDURES MANUAL TO REPAIR THE BCM. 1.B. CHECK THE PCM USING A DRB III® SCAN TOOL. IF OK, GO TO STEP 1.C. IF NOT OK, REFER TO THE PROPER POWERTRAIN DIAGNOSTIC PROCEDURES MANUAL TO REPAIR THE PCM. 1.C. CHECK THE SPEED SIGNAL INPUT INTO THE PCM. THE SPEED SIGNAL ORIGINATES FROM THE TCM FOR VEHICLES WITH THE 4 SPEED ELECTRONIC TRANSMISSIONS. CHECK CONTINUITY FROM TCM TO PCM. IF OK, USE A DRB III® SCAN TOOL TO CHECK TCM. REFER TO THE PROPER TRANSMISSION DIAGNOSTIC PROCEDURES MANUAL TO REPAIR THE TCM. IF NOT OK, REPAIR WIRING.
	2. INTERNAL CLUSTER FAILURE.	2.A. PERFORM CLUSTER SELF-DIAGNOSTIC TEST AND CHECK FOR FAULT CODES. • IF THE POINTER MOVES DURING TEST BUT STILL APPEARS ERRATIC, THEN GO TO STEP 2.B. 2.B. REPLACE CLUSTER ASSEMBLY.

INSTRUMENT CLUSTER (Continued)

CONDITION	POSSIBLE CAUSES	CORRECTION
SPEEDOMETER INACCURATE.	1. SPEEDOMETER OUT OF CALIBRATION.	1. PERFORM CLUSTER SELF-DIAGNOSTIC TEST. • IF SPEEDOMETER IS ACCURATE TO THE CALIBRATION POINTS THEN LOOK FOR ANOTHER POSSIBLE CAUSE OF INACCURACY. • IF SPEEDOMETER IS NOT ACCURATE TO THE CALIBRATION POINTS, REPLACE CLUSTER ASSEMBLY.
	2. WRONG SPEEDOMETER PINION FOR TIRE SIZE.	2.A. IF VEHICLE HAS A 4 SPEED ELECTRONIC TRANSMISSION GO TO STEP 2.C. OTHERWISE GO TO STEP 2.B. 2.B. CHECK IF CORRECT SPEEDOMETER PINION IS BEING USED WITH TIRES ON VEHICLE. REFER TO TRANSMISSION FOR DIAGNOSIS AND TESTING. • IF THE INCORRECT PINION IS IN TRANSMISSION THEN REPLACE WITH CORRECT PINION. • IF THE CORRECT PINION IS IN THE TRANSMISSION, CHECK TIRE SIZE. 2.C. USE A DRB III® SCAN TOOL TO CHECK THE TCM TO SEE IF THE CORRECT TIRE SIZE HAS BEEN PROGRAMMED INTO THE TCM. • IF THE INCORRECT TIRE SIZE WAS SELECTED, SELECT THE PROPER TIRE SIZE. • IF THE CORRECT TIRE SIZE WAS SELECTED, CHECK SPEED SENSOR.
	3. BAD SPEED SENSOR.	3. REFER TO TRANSMISSION, SPEED SENSOR, DIAGNOSIS AND TESTING.

TACHOMETER DIAGNOSIS

CONDITION	POSSIBLE CAUSES	CORRECTION
NO POINTER MOVEMENT.	1. INTERNAL CLUSTER FAILURE.	1.A. PERFORM CLUSTER SELF-DIAGNOSTIC TEST AND CHECK FOR FAULT CODES. • IF TACHOMETER POINTER MOVES TO CALIBRATION POINTS DURING TEST, LOOK FOR ANOTHER POSSIBLE CAUSE OF FAILURE. • IF THE POINTER DOESN'T MOVE DURING TEST, CHECK FOR POWER AND GROUND TO THE MIC. IF POWER AND GROUND ARE PRESENT GO TO STEP 1.B. 1.B. REPLACE CLUSTER. GO TO STEP 1.C.
	2. ″NO RPM″ PCI BUS MESSAGE OR ″ZERO RPM″ PCI BUS MESSAGE FROM PCM.	2. CHECK THE PCM USING A DRB III® SCAN TOOL. REFER TO THE PROPER POWERTRAIN DIAGNOSTIC PROCEDURES MANUAL TO PROPERLY DIAGNOSE AND REPAIR.

INSTRUMENT CLUSTER (Continued)

CONDITION	POSSIBLE CAUSES	CORRECTION
ERRATIC POINTER MOVEMENT.	1. BAD PCI BUS MESSAGE FROM PCM.	1. CHECK THE PCM USING A DRB III® SCAN TOOL. REFER TO THE PROPER POWERTRAIN DIAGNOSTIC PROCEDURES MANUAL TO PROPERLY DIAGNOSE AND REPAIR.
	2. INTERNAL CLUSTER FAILURE.	2. PERFORM CLUSTER SELF-DIAGNOSTIC TEST AND CHECK FOR FAULT CODES. • IF THE POINTER MOVES DURING TEST BUT STILL APPEARS ERRATIC, REPLACE CLUSTER ASSEMBLY.
TACHOMETER INACCURATE.	TACHOMETER OUT OF CALIBRATION.	PERFORM CLUSTER SELF-DIAGNOSTIC TEST. • IF TACHOMETER IS ACCURATE TO THE CALIBRATION POINTS, LOOK FOR ANOTHER POSSIBLE CAUSE OF INACCURACY. • IF TACHOMETER IS NOT ACCURATE TO THE CALIBRATION POINTS, REPLACE CLUSTER ASSEMBLY.

FUEL GAUGE DIAGNOSIS

CONDITION	POSSIBLE CAUSES	CORRECTION
NO POINTER MOVEMENT.	1. INTERNAL CLUSTER FAILURE.	1. PERFORM CLUSTER SELF-DIAGNOSTIC TEST. • IF FUEL GAUGE POINTER MOVES TO CALIBRATION POINTS, LOOK FOR ANOTHER POSSIBLE CAUSE OF FAILURE. • IF THE POINTER DOESN'T MOVE DURING TEST, VERIFY POWER AND GROUND ARE BEING PROVIDED TO THE CLUSTER. IF YES, REPLACE CLUSTER ASSEMBLY. IF NO, DETERMINE CAUSE OF NO POWER OR GROUND.
	2. NO PCI FUEL MESSAGE OR EMPTY PCI BUS MESSAGE FROM BODY CONTROL MODULE.	2.A. CHECK THE BCM USING A DRB III® SCAN TOOL. IF OK, GO TO STEP 2.B. IF NOT OK, REFER TO THE PROPER BODY DIAGNOSTIC PROCEDURES MANUAL TO PROPERLY DIAGNOSE AND REPAIR. 2.B. REFER TO THE FUEL SECTION OF THE SERVICE MANUAL FOR THE FUEL LEVEL SENDING UNIT TEST PROCEDURE. TEST UNIT AND REPAIR AS INSTRUCTED.

INSTRUMENT CLUSTER (Continued)

CONDITION	POSSIBLE CAUSES	CORRECTION
ERRATIC POINTER MOVEMENT.	1. BAD PCI FUEL MESSAGE FROM THE BODY CONTROLLER.	1. USE A DRB III® SCAN TOOL TO CHECK THE BCM. IF OK, GO TO STEP 2. IF NOT OK, REFER TO THE PROPER BODY DIAGNOSTIC PROCEDURES MANUAL TO PROPERLY DIAGNOSE AND REPAIR.
		2. REFER TO THE FUEL SECTION OF THE SERVICE MANUAL FOR THE FUEL LEVEL SENDING UNIT TEST PROCEDURE. TEST UNIT. IF OK, LOOK FOR ANOTHER POSSIBLE CAUSE FOR FUEL GAUGE FAILURE. IF NOT OK, REPAIR SENDING UNIT.
	2. INTERNAL CLUSTER FAILURE.	2. PERFORM CLUSTER SELF-DIAGNOSTIC TEST AND CHECK FOR FAULT CODES. • IF THE POINTER MOVES DURING TEST BUT STILL APPEARS ERRATIC, REPLACE CLUSTER ASSEMBLY.
FUEL GAUGE INACCURATE.	1. FUEL GAUGE OUT OF CALIBRATION.	1. PERFORM CLUSTER SELF-DIAGNOSTIC TEST. IF POINTER IS ACCURATE TO THE CALIBRATION POINTS LOOK FOR ANOTHER POSSIBLE CAUSE OF FAILURE. IF POINTER IS INACCURATE TO THE CALIBRATION POINTS, REPLACE CLUSTER ASSEMBLY.
	2. FUEL LEVEL SENDING UNIT IS OUT OF CALIBRATION.	2. REFER TO THE FUEL SECTION OF THE SERVICE MANUAL FOR TESTING AND REPAIR PROCEDURE.

TEMPERATURE GAUGE DIAGNOSIS

CONDITION	POSSIBLE CAUSES	CORRECTION
NO POINTER MOVEMENT.	1. INTERNAL CLUSTER FAILURE.	1. PERFORM CLUSTER SELF-DIAGNOSTIC TEST AND CHECK. • IF TEMPERATURE GAUGE POINTER MOVES TO CALIBRATION POINTS, LOOK FOR ANOTHER POSSIBLE CAUSE OF FAILURE. • IF THE POINTER DOESN'T MOVE DURING TEST, VERIFY POWER AND GROUND ARE BEING PROVIDED TO THE CLUSTER. IF YES, REPLACE CLUSTER. IF NO, DETERMINE CAUSE OF NO POWER OR NO GROUND.
	2. NO PCI TEMPERATURE MESSAGE OR COLD PCI BUS MESSAGE FROM THE POWERTRAIN CONTROL MODULE.	2.A. CHECK PCM FAULT CODES USING A DRB III® SCAN TOOL. IF THERE ARE NO FAULTS, GO TO STEP 2.B. IF THERE ARE FAULTS, REFER TO THE PROPER POWERTRAIN DIAGNOSTIC PROCEDURES MANUAL TO PROPERLY DIAGNOSE AND REPAIR. 2.B. REFER TO FUEL, COOLANT TEMPERATURE SENSOR, DIAGNOSIS AND TESTING. REPAIR SENSOR AS NEEDED.

INSTRUMENT CLUSTER (Continued)

CONDITION	POSSIBLE CAUSES	CORRECTION
ERRATIC POINTER MOVEMENT.	1. BAD PCI BUS MESSAGE FROM THE POWERTRAIN CONTROL MODULE.	1.A. CHECK PCM FAULT CODES USING A DRB III® SCAN TOOL. IF THERE ARE NO FAULTS, GO TO STEP 1.B. IF THERE ARE FAULTS, REFER TO THE PROPER POWERTRAIN DIAGNOSTIC PROCEDURES MANUAL TO PROPERLY DIAGNOSE AND REPAIR. 1.B. REFER TO FUEL, COOLANT TEMPERATURE SENSOR, DIAGNOSIS AND TESTING. REPAIR SENSOR AS NEEDED.
	2. INTERNAL CLUSTER FAILURE.	2. PERFORM CLUSTER SELF-DIAGNOSTIC TEST AND CHECK FOR FAULT CODES. • IF THE POINTER MOVES DURING TEST BUT STILL APPEARS ERRATIC, REPLACE CLUSTER ASSEMBLY.
TEMPERATURE GAUGE INACCURATE.	1. TEMPERATURE GAUGE OUT OF CALIBRATION.	1. PERFORM CLUSTER SELF-DIAGNOSTIC TEST. • IF POINTER IS ACCURATE TO THE CALIBRATION POINTS LOOK FOR ANOTHER POSSIBLE CAUSE OF FAILURE. • IF POINTER IS INACCURATE TO THE CALIBRATION POINTS, REPLACE CLUSTER ASSEMBLY.
	2. COOLANT SENSOR OUT OF CALIBRATION.	2. REFER TO FUEL, COOLANT TEMPERATURE SENSOR FOR TEST AND REPAIR PROCEDURE.

ODOMETER DIAGNOSIS

CONDITION	POSSIBLE CAUSES	CORRECTION
NO DISPLAY.	1. NO PCI BUS ODOMETER MESSAGE FROM BCM.	1. USE A DRB III® SCAN TOOL TO CHECK THE BCM. REFER TO THE PROPER BODY DIAGNOSTIC PROCEDURES MANUAL TO PROPERLY DIAGNOSE AND REPAIR.
	2. INTERNAL CLUSTER FAILURE.	2. PERFORM CLUSTER SELF-DIAGNOSTIC TEST AND CHECK FOR FAULT CODES. **• IF ODOMETER PASSES THE SEGMENT CHECK, LOOK FOR ANOTHER POSSIBLE CAUSE OF FAILURE. IF IT FAILS VERIFY POWER AND GROUND ARE BEING PROVIDED TO THE CLUSTER. IF YES, REPLACE CLUSTER. IF NO, DETERMINE CAUSE OF NO POWER OR GROUND.**

INSTRUMENT CLUSTER (Continued)

CONDITION	POSSIBLE CAUSES	CORRECTION
ERRATIC DISPLAY	1. INTERNAL CLUSTER FAILURE.	1. PERFORM CLUSTER SELF-DIAGNOSTIC TEST AND CHECK FOR FAULT CODES. • IF ODOMETER PASSES THE SEGMENT TEST, FAILURE MAY NOT BE IN THE CLUSTER. LOOK FOR ANOTHER POSSIBLE CAUSE OF FAILURE. 2. VERIFY GOOD POWER AND GROUND CONNECTIONS. IF CONNECTIONS ARE GOOD AND NO OTHER PROBLEMS ARE FOUND, REPLACE CLUSTER ASSEMBLY.
	2. BAD PCI BUS MESSAGE FROM THE BCM.	2. USE A DRB III® SCAN TOOL TO CHECK THE BCM. REFER TO THE PROPER BODY DIAGNOSTIC PROCEDURES MANUAL TO PROPERLY DIAGNOSE AND REPAIR.
ODOMETER WON'T GO INTO TRIP MODE.	TRIP SWITCH DOESN'T WORK.	IF CLUSTER WILL NOT GO INTO SELF DIAGNOSTIC MODE AND CANNOT TOGGLE BETWEEN ODOMETER AND TRIP ODOMETER, REPLACE CLUSTER.
TRIP ODOMETER WON'T RESET.	RESET SWITCH DOESN'T WORK.	IF CLUSTER WILL NOT GO INTO SELF DIAGNOSTIC MODE AND TRIP ODOMETER WILL NOT RESET, REPLACE CLUSTER.

ELECTRONIC GEAR INDICATOR DISPLAY DIAGNOSIS

CONDITION	POSSIBLE CAUSES	CORRECTION
NO DISPLAY.	1. INTERNAL CLUSTER FAILURE.	1. PERFORM CLUSTER SELF-DIAGNOSTIC TEST AND CHECK FOR FAULT CODES. • IF PRND3L (PRND1234 IF AUTOSTICK EQUIPPED) PASSES THE SEGMENT CHECK, THEN FAILURE MAY NOT BE IN THE CLUSTER. LOOK FOR ANOTHER POSSIBLE CAUSE OF FAILURE. IF IT FAILS, REPLACE CLUSTER ASSEMBLY.
ERRATIC DISPLAY.	1. INTERNAL CLUSTER FAILURE.	1. PERFORM CLUSTER SELF-DIAGNOSTIC TEST AND CHECK FOR FAULT CODES. • IF PRND3L (PRND1234 IF AUTOSTICK EQUIPPED) PASSES THE SEGMENT CHECK, THEN FAILURE MAY NOT BE IN THE CLUSTER. LOOK FOR ANOTHER POSSIBLE CAUSE OF FAILURE.
	2. BAD PCI BUS MESSAGE FROM THE TCM.	2. USE A DRB III® SCAN TOOL TO CHECK THE TCM. REFER TO THE PROPER TRANSMISSION DIAGNOSTIC PROCEDURES MANUAL TO PROPERLY DIAGNOSE AND REPAIR.

INSTRUMENT CLUSTER (Continued)

CONDITION	POSSIBLE CAUSES	CORRECTION
ALL SEGMENTS ARE ON.	1. NO PCI BUS MESSAGE FROM THE TCM.	1.A. PERFORM CLUSTER SELF-DIAGNOSTIC TEST. IF PRND3L (PRND1234 IF AUTOSTICK EQUIPPED) PASSES TEST GO TO STEP 1.B. IF PRND3L (PRND1234 IF AUTOSTICK EQUIPPED) FAILS TEST, REPLACE CLUSTER ASSEMBLY. 1.B. CHECK THE TCM USING A DRB III® SCAN TOOL. REFER TO THE PROPER TRANSMISSION DIAGNOSTIC PROCEDURES MANUAL TO PROPERLY DIAGNOSE AND REPAIR.

REMOVAL

(1) Disconnect and isolate the battery negative cable.
(2) Remove Over Steering Column Bezel by lifting it straight up with a firm pull.
(3) Remove the four cluster bezel attaching screws.
(4) Tilt the steering column in the full down position.
(5) Pull rearward on the cluster bezel and remove.
(6) Remove the four screws holding instrument cluster to instrument panel.
(7) Rotate top of cluster outward.
(8) Disconnect the cluster harness connector.
(9) Remove instrument cluster from instrument panel.

INSTALLATION

(1) Connect the instrument cluster wire connector.
(2) Rotate top of cluster inward as placing into instrument panel opening.
(3) Install the four screws holding instrument cluster to instrument panel.
(4) Position cluster bezel into place.
(5) Install the four bezel attaching screws.
(6) Install the Over Steering Column Bezel by firmly snapping into place.
(7) Connect the battery negative cable.

CLUSTER LENS

REMOVAL

(1) Remove the instrument cluster. Refer to Electrical, Instrument Cluster, Removal.
(2) Remove the screws holding the lens to the instrument cluster.
(3) Press down on the snap features of the lens and remove the lens from the cluster.

INSTALLATION

(1) Insert the lens snap features into the cluster.
(2) Install the screws holding the lens to the instrument cluster.
(3) Install the instrument cluster. Refer to Electrical, Instrument Cluster, Installation.

LAMPS

TABLE OF CONTENTS

	page		page
LAMPS/LIGHTING - EXTERIOR	1	**LAMPS/LIGHTING - INTERIOR**	20

LAMPS/LIGHTING - EXTERIOR

TABLE OF CONTENTS

	page		page
LAMPS/LIGHTING - EXTERIOR		INSTALLATION	13
DESCRIPTION	2	**HEADLAMP SWITCH**	
OPERATION	2	DIAGNOSIS AND TESTING - HEADLAMP SWITCH	13
WARNING	3	REMOVAL	13
SPECIFICATIONS		INSTALLATION	13
EXTERIOR LAMPS	3	**HEADLAMP UNIT**	
BRAKE LAMP SWITCH		STANDARD PROCEDURE - HEADLAMP UNIT ALIGNMENT	14
DESCRIPTION	4	REMOVAL	15
OPERATION	4	INSTALLATION	15
DIAGNOSIS AND TESTING - BRAKE LAMP SWITCH	4	**HEADLAMP UNIT - EXPORT**	
REMOVAL	5	STANDARD PROCEDURE - HEADLAMP UNIT ALIGNMENT - EXPORT	15
INSTALLATION	5	REMOVAL	17
CENTER HIGH MOUNTED STOP LAMP		INSTALLATION	17
REMOVAL	6	**LICENSE LAMP**	
INSTALLATION	6	REMOVAL	17
CENTER HIGH MOUNTED STOP LAMP UNIT		INSTALLATION	17
REMOVAL	6	**MULTI-FUNCTION SWITCH**	
INSTALLATION	6	DESCRIPTION - TURN SIGNAL SYSTEM	17
FRONT FOG LAMP		OPERATION - TURN SIGNAL SYSTEM	17
DIAGNOSIS AND TESTING - FRONT FOG LAMP	7	DIAGNOSIS AND TESTING - MULTI-FUNCTION SWITCH	18
REMOVAL	8	REMOVAL	18
INSTALLATION	8	INSTALLATION	18
FRONT FOG LAMP UNIT		**PARK/TURN SIGNAL LAMP**	
STANDARD PROCEDURE		REMOVAL	18
STANDARD PROCEDURE - FRONT FOG LAMP UNIT ALIGNMENT	9	INSTALLATION	18
STANDARD PROCEDURE - FRONT FOG LAMP UNIT ALIGNMENT - EXPORT	9	**TAIL LAMP**	
REMOVAL	10	REMOVAL	18
INSTALLATION	10	INSTALLATION	19
HEADLAMP		**TAIL LAMP UNIT**	
DIAGNOSIS AND TESTING - HEADLAMP	11	REMOVAL	19
REMOVAL	12	INSTALLATION	19

LAMPS/LIGHTING - EXTERIOR

DESCRIPTION

LAMP SYSTEMS

Lighting circuits are protected by fuses. Lighting circuits require an overload protected power and high side drivers source, ON/OFF device, lamps and body grounds to operate properly. Plastic lamps require a wire in the harness to supply body ground to the lamp socket. Replace sockets and bulbs that are corroded.

Some of the interior and exterior lighting functions are governed by the Body Control Module (BCM). The headlamp, dome, and the door ajar switches provide signals to the BCM. The BCM in turn sends a Programmable Communication Interface (PCI) bus message to the Front Control Module (FCM) to enable the necessary drivers to set the required illumination configuration.

Wire connectors can make intermittent contact or become corroded. Before coupling wire connectors, inspect the terminals inside the connector. Male terminals should not be bent or disengaged from the insulator. Female terminals should not be sprung open or disengaged from the insulator. Bent and sprung terminals can be repaired using needle nose pliers and pick tool. Corroded terminals appear chalky or green. Corroded terminals should be replaced to avoid recurrence of the problem symptoms.

Begin electrical system failure diagnosis by testing related fuses in the fuse block and intelligent power module. Verify that bulbs are in good condition and test continuity of the circuit ground. Refer to the appropriate wiring information.

AUTOMATIC HEADLAMP SYSTEM

The Automatic Headlamp system turns the instrumentation and exterior illumination lamps ON when the ambient light levels are Night and the engine RPM is 450 or above, and OFF when light levels are Day.

DAYTIME RUNNING LAMPS

Operating the high-beam headlamps at reduced power provides daytime running lamps, which are required on all new Canadian vehicles. Daytime running lamps are functional when 450 rpm's are reached.

HEADLAMPS ON WITH WINDSHIELD WIPERS

For vehicles equipped with the Automatic Headlamp System, the instrumentation and exterior illumination lamps will be turned ON when the headlamp switch is in the AUTO position, RPM > 450 and the windshield wipers have been in the intermittent, low or high mode of operation for more than ten seconds. When the windshield wipers are turned OFF the Body Control Module will determine if the instrumentation and exterior illumination lamps should remain ON base upon the current ambient light level.

HEADLAMP SYSTEM

The configuration of the headlamp system of headlamps, park lamps and fog lamps is determined by the BCM. The BCM determines the lighting configuration as a result of the inputs from the ignition switch, headlamp switch and multi-function switch. A PCI bus is transmitted from the BCM to the FCM to enable the necessary drivers to set the illumination configuration. Four wires are connected between the headlamp switch and the BCM. The first wire contains information regarding the position of the headlamp switch (Off, Automatic Headlamps, Automatic Headlamp switch fog, Park with Fog, Head, or Head with Fog Lamps). The second wire contains information regarding the position of the dimmer switch (Dome Lamp, Daytime Brightness, Dimming Level or Off). The third wire is a dedicated signal return (ground) wire. The fourth wire provides power to the front fog lamp indicator.

HEADLAMP TIME DELAY SYSTEM

The headlamp time delay system is controlled by the Body Control Module (BCM) via a PCI bus message transmitted by the BCM to the FCM to turn off the headlamps.

OPERATION

AUTOMATIC HEADLAMP SYSTEM

Automatic headlamps are controlled by the Body Control Module (BCM). With the headlamp switch in the AUTO position, the BCM will control the headlamp, parking, side marker, tail and instrumentation lamps based on ambient light levels. Ambient light levels are monitored by the BCM using the Day/Night signal and Electrochromatic Mirror (ECM) present from the Compass Mini Trip (CMTC) located on the front windshield in front of the rear view mirror ECM. Ambient light readings are averaged to limit cycling the lamps ON and OFF when passing through areas with varying light levels. The automatic headlamps will only function when the engine is running with RPM > 450. When the headlamp switch is in the AUTO position (Automatic mode), the Headlamp Time Delay system will function when the ignition switch is placed in any position other than run/start.

LAMPS/LIGHTING - EXTERIOR (Continued)

DAYTIME RUNNING LAMPS

Power is reduced using pulse-width modulation to the high beams, where by the power is switched on and off rapidly instead of remaining on continuously. The duration and interval of the power pulses is programmed into the FCM. Daytime running lamps are functional when 450 rpm's are reached.

HEADLAMP SYSTEM

The headlamp system will default to headlamps ON position when ignition switch is ON and when an open or short circuit failure occurs on the headlamp switch input or PCI data bus communication between the BCM and the FCM fails. The system will return to normal operation when the open or short is repaired. A fault will be reported by the BCM when a failure occurs on the dimmer or headlamp switch input.

If the exterior lamps are ON and the headlamp switch is in any position other than OFF or AUTO and with the ignition switch OFF (LOCK) after 3 minutes the BCM sends a message via PCI bus to the FCM informing the FCM to turn off the headlamps, park lamps and fog lamps. This feature prevents the vehicle battery from being discharged when the vehicle lights have been left ON.

HEADLAMP TIME DELAY SYSTEM

The headlamp time delay system is activated by turning the headlamps ON (high or low beam) while the engine is running, turning the ignition switch OFF, and then turning the headlamp switch OFF within 45 seconds. The system will not activate if more than 45 seconds elapse between ignition switch OFF and headlamp switch OFF. The BCM will allow the headlamps to remain ON for 90 seconds (configurable) before they automatically turn off (If the key is in the ignition during the headlamp time delay mode, then both the headlamps and park lamps (including panel dimming) will be ON). Refer to the Owner's Manual for more information.

If the headlamp switch is in the Auto Headlamp Position, the headlamps are ON due to the night signal from the CMTC and the ignition switch is in any position other than run/start, the BCM shall enter a 90 second (configurable) Auto Headlamps time delay mode. If the key is in the ignition during the headlamp time delay mode, then both the headlamps and park lamps (including panel dimming) will be ON. If the key is not in the ignition, then only the headlamps will be ON. The BCM will allow the headlamps to remain ON for 90 seconds before they automatically turn OFF. Refer to the Owner's Manual for more information.

OPTICAL HORN/HIGH BEAMS

When the multi-function switch is pulled to the first detent (optical horn) signal, the headlamps are ON, key-in the ignition the BCM shall send a message via PCI bus to the FCM to turn on the headlamps drivers to illuminate all four filaments (Low and High beams). When the multi-function switch is pulled to the second detent (high beam) signal and the headlamps are ON, the BCM shall send a message via PCI bus to the FCM to turn on the headlamps drivers. The High Beams are illuminated and the Low Beams and Fog Lamps (if ON) are extinguished. If the headlamps were in the high beam configuration when power was removed from the headlamps, the headlamps will be configured as low beam the next time they are activated.

NOTE: For RG - Export vehicles, the low beams and front fog lamps will remain ON when high beams are activated.

WARNING

Eye protection should be used when servicing glass components. Personal injury or death can result.

Do not touch the glass of halogen bulbs with fingers or other possibly oily surface, reduced bulb life will result. Do not use bulbs other than those indicated in the Bulb Application table. Damage to lamp and/or Daytime Running Lamp Module can result. Do not use fuses, circuit breakers or relays having greater amperage value than indicated on the fuse panel or in the Owners Manual.

Do not use bulbs other than those listed in the Bulb Application Table. Damage to lamp can result. Do not touch halogen bulbs with fingers or other oily surfaces. Bulb life will be reduced.

SPECIFICATIONS

EXTERIOR LAMPS

BULB APPLICATION TABLE

LAMP	BULB
BACK-UP	3057
CHMSL	921
FRONT SIDE MARKER/PARK/ TURN (DODGE)	3157A
FRONT SIDE MARKER/PARK/ TURN (CHRYSLER)	3157AK

LAMPS/LIGHTING - EXTERIOR (Continued)

LAMP	BULB
FRONT FOG	9145
HEADLAMP (DODGE)	9007
HEADLAMP (CHRYSLER	H13
LICENSE	168
TAIL, STOP, TURN SIGNAL	3057

BULB APPLICATION TABLE - EXPORT

LAMP	BULB
HEADLAMP LOW BEAM	H7
HEADLAMP HIGH BEAM	H9
FRONT FOG	H3
FRONT POSITION	W5W
FRONT TURN SIGNAL	PY21W
SIDE REPEATER	T4W
LICENSE PLATE	W5W/168
REAR TAIL AND STOP	P21/5W
REAR TURN SIGNAL	PY21W
BACK-UP	P21W
REAR FOG	P21W
CHMSL	W16W/921

BRAKE LAMP SWITCH

DESCRIPTION

The brake lamp switch is located under the instrument panel, at the brake pedal arm (Fig. 3). It has three internal switches controlling various functions of the vehicle. It's main function is to control operation of the vehicle's brake lamps via a brake switch input to the BCM. The BCM will then activate the stop lamps. Other functions include speed control deactivation, brake sense for the antilock brake system and brake sense for the brake transmission shift interlock.

CAUTION: The switch can only be adjusted once. That is during initial installation of the switch. If the switch is not adjusted properly or has been removed for some service, a new switch must be installed and adjusted.

OPERATION

When the brake pedal is pressed, the plunger on the outside of the brake lamp switch extends outward. This action opens or closes the contacts of the three switches inside the brake lamp switch.

With the brake pedal pressed down (plunger extended), the switch for terminals 1 and 2 is closed completing the circuit. The switch for terminals 3 and 4 is open and so is the switch for terminals 5 and 6.

When the brake pedal is released (plunger pushed in), the three switches assume the opposite positions. The switch for terminals 1 and 2 is now open while the other two switches are now closed, completing their circuits.

A lever on the back of the switch is used to set the switch into the "adjusted" position. A non-adjusted switch will have the lever set to the diagonal position in relation to the switch housing. The plunger can be moved in and out, but the states of the internal switches will not change.

CAUTION: Never move the adjustment lever of the new brake lamp switch without it being properly installed in the vehicle first. Such action will render the switch unusable and the switch must be discarded.

Once installed in the vehicle as described in the brake lamp switch installation procedure (Refer to 8 - ELECTRICAL/LAMPS/LIGHTING - EXTERIOR/ BRAKE LAMP SWITCH - INSTALLATION), the new switch's adjustment lever is rotated to the adjusted position as indicated (Fig. 4). This action locks the plunger to the internal switches. **Once in this position the switch is permanently adjusted (or locked) and cannot be readjusted or released even if the lever is moved back.**

DIAGNOSIS AND TESTING - BRAKE LAMP SWITCH

NOTE: Before proceeding with this diagnostic test, verify the adjustment lever on the back of the switch is in the adjusted position. If the lever is in the non-adjusted (diagonal) position it may have never been adjusted (Refer to 8 - ELECTRICAL/ LAMPS/LIGHTING - EXTERIOR/BRAKE LAMP SWITCH - OPERATION). For adjustment, (Refer to 8 - ELECTRICAL/LAMPS/LIGHTING - EXTERIOR/ BRAKE LAMP SWITCH - INSTALLATION)

If the electrical circuit has been tested and the brake lamp switch is suspected of being faulty, it can be tested using the following method.

(1) Remove the switch from the vehicle. (Refer to 8 - ELECTRICAL/LAMPS/LIGHTING - EXTERIOR/ BRAKE LAMP SWITCH - REMOVAL)

(2) With the switch in the released position (plunger extended), use an ohmmeter to test each of the three internal switches as shown (Fig. 1). You should achieve the results as listed in the figure.

BRAKE LAMP SWITCH (Continued)

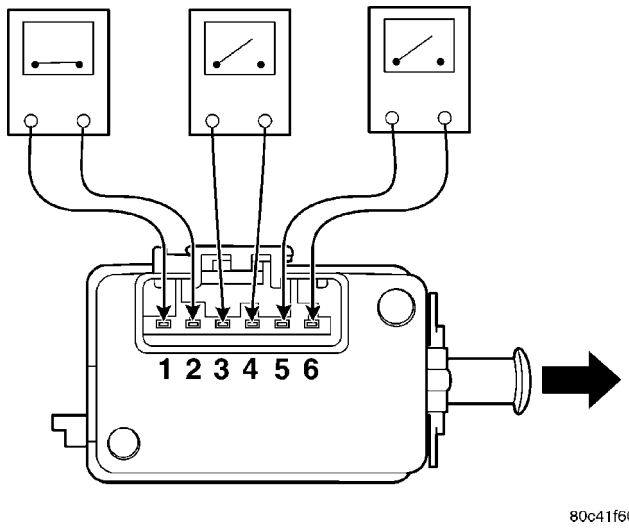

Fig. 1 SWITCH TEST - RELEASED POSITION

(3) Gently push the plunger on the brake lamp switch in until it stops.

(4) With the switch in this depressed position (plunger pushed in), use an ohmmeter to test each of the three internal switches as shown (Fig. 2). You should achieve the results as listed in the figure.

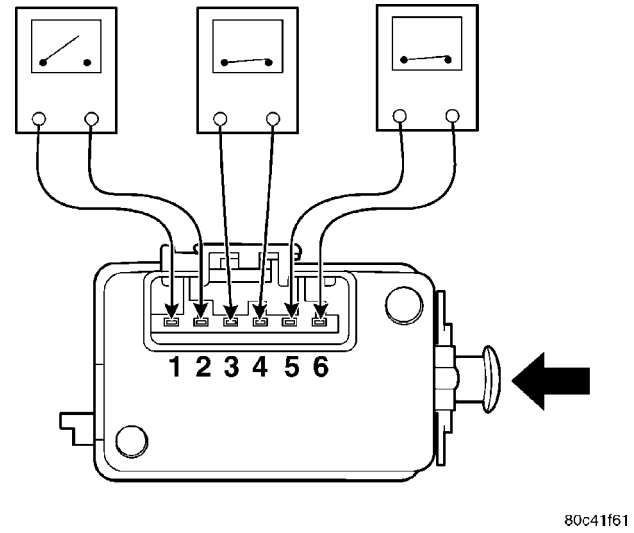

Fig. 2 SWITCH TEST - DEPRESSED POSITION

If you do not achieve the results as listed in both figures, the switch is faulty and must be replaced. Refer to Removal And Installation in this section.

If the switch is found to be operating properly, it may be misadjusted. Do not reinstall the switch, replace it. (Refer to 8 - ELECTRICAL/LAMPS/ LIGHTING - EXTERIOR/BRAKE LAMP SWITCH - INSTALLATION)

CAUTION: The switch can only be adjusted once. That is during initial installation of the switch. If the switch is not adjusted properly or has been removed for any reason, a new switch must be installed and adjusted.

REMOVAL

(1) Disconnect and isolate the battery negative cable from its post on the battery.

(2) Remove silencer panel below steering column and knee blocker.

(3) Remove the brake lamp switch by rotating the switch in a counterclockwise direction approximately 30 degrees and pulling it out of the bracket (Fig. 3).

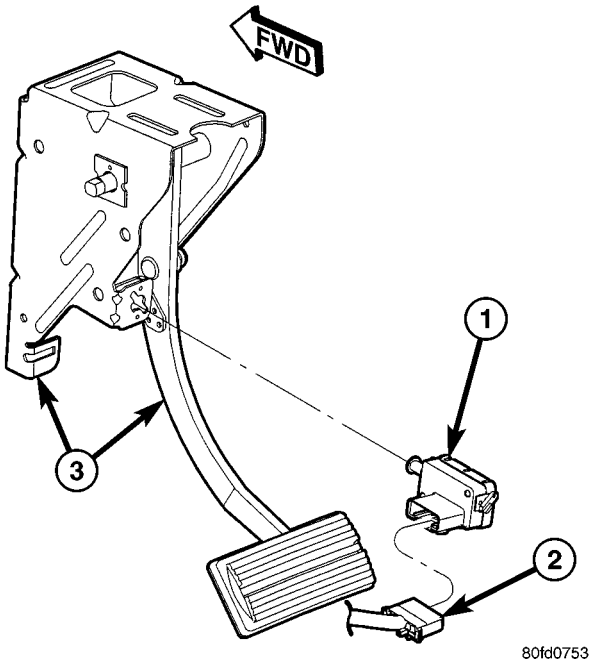

Fig. 3 Brake Lamp Switch And Pedal With Bracket

1 - BRAKE LAMP SWITCH
2 - WIRING CONNECTOR
3 - PEDAL AND BRACKET

(4) Release the locking tab and disconnect the wiring connector from the switch.

(5) Discard the brake lamp switch. It must not be reused.

INSTALLATION

CAUTION: Do not reuse the original brake lamp switch. The switch can only be adjusted once. That is during initial installation of the switch. If the switch is not adjusted properly or has been removed for some service, a new switch must be installed and adjusted.

(1) Mount and adjust the NEW brake lamp switch using the following procedure:

(a) Connect the wiring connector to the switch and latch the locking tab.

BRAKE LAMP SWITCH (Continued)

(b) Install the switch in its bracket by aligning the index tab on the switch with the slot in the mounting bracket.

(c) When the switch is fully seated in its bracket, rotate the switch clockwise approximately 30° to lock the switch into place.

(d) With the brake pedal in the fully released position, move the lever on the back of the brake lamp switch from the angled non-adjusted position to the full vertical position as shown (Fig. 4). This will adjust the brake lamp switch to the vehicle.

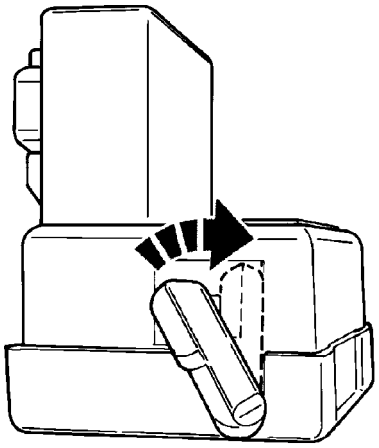

Fig. 4 Adjustment Lever Movement

(2) Install silencer panel below steering column knee blocker.

(3) Reconnect the battery negative terminal.

(4) Check the stop lamps to verify they are operating properly and not staying on when the pedal is in the released position.

(5) Road test the vehicle to ensure proper operation of the brakes including ABS and speed control (if equipped).

CENTER HIGH MOUNTED STOP LAMP

REMOVAL

(1) Disconnect and isolate the battery negative cable.

(2) Remove two retaining screws (Fig. 5).

(3) Twist socket counter-clockwise and remove from lamp.

(4) Pull bulb from socket (Fig. 7).

INSTALLATION

(1) Push bulb into socket.

(2) Install socket into the lamp unit.

(3) Install the retaining screws.

(4) Reconnect the battery negative cable.

CENTER HIGH MOUNTED STOP LAMP UNIT

REMOVAL

(1) Disconnect and isolate the battery negative cable.

(2) Remove the two retaining screws (Fig. 5).

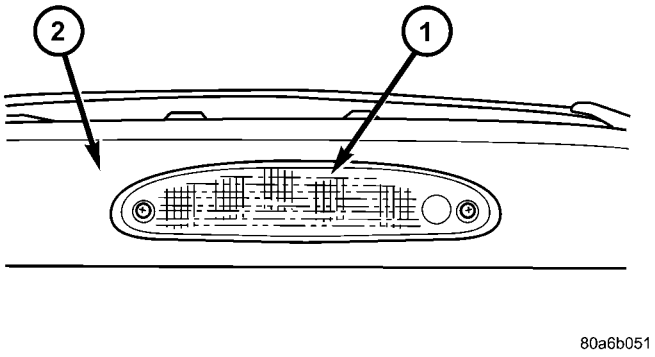

Fig. 5 CHMSL UNIT

1 - CHMSL UNIT
2 - LIFTGATE

(3) Disconnect the rear window washer nozzle assembly (Fig. 6).

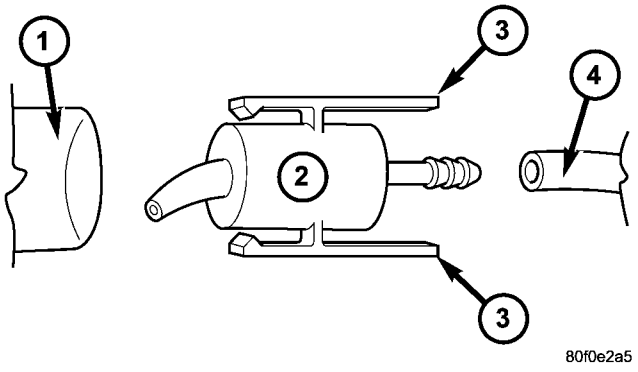

Fig. 6 REAR WASHER NOZZLE ASSEMBLY

1 - BARREL IN CHMSL
2 - NOZZLE ASSEMBLY
3 - SQUEEZE ARMS TO RELEASE NOZZLE ASSEMBLY
4 - HOSE

(4) Disconnect CHMSL electrical connector from bulb socket (Fig. 7).

INSTALLATION

(1) Connect electrical connector to CHMSL bulb socket.

(2) Reconnect the rear window washer nozzle assembly.

CENTER HIGH MOUNTED STOP LAMP UNIT (Continued)

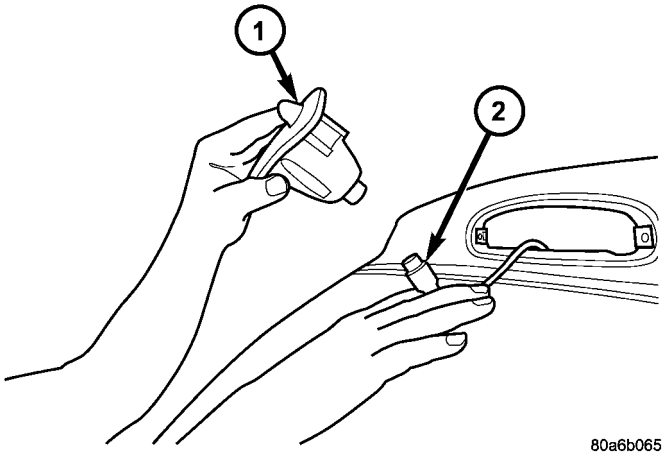

Fig. 7 CHMSL ELECTRICAL CONNECTOR

1 - CHMSL UNIT
2 - CHMSL ELECTRICAL CONNECTOR

(3) Install the retaining screws.
(4) Reconnect the battery negative cable.

FRONT FOG LAMP

DIAGNOSIS AND TESTING - FRONT FOG LAMP

When a vehicle experiences problems with the front fog lamp system, verify the condition of the battery connections, fuses, charging system, fog lamp bulbs, wire connectors, relay, high beam switch, and headlamp switch. Refer to the appropriate wiring information.

Each vehicle is equipped with various lamp assemblies. A good ground is necessary for proper lighting operation. Grounding is provided by the lamp socket when it comes in contact with the metal body, or through a separate ground wire.

When changing lamp bulbs check the socket for corrosion. If corrosion is present, clean it with a wire brush.

When it is necessary to remove components to service another, it should not be necessary to apply excessive force or bend a component to remove it. Before damaging a trim component, verify hidden fasteners or captured edges are not holding the component in place.

FRONT FOG LAMP DIAGNOSIS

CONDITION	POSSIBLE CAUSES	CORRECTION
FOG LAMPS ARE DIM WITH ENGINE IDLING OR IGNITION TURNED OFF.	1. Loose or corroded battery cables.	1. Clean and secure battery cable clamps and posts.
	2. Loose or worn generator drive belt.	2. Adjust or replace generator drive belt.
	3. Charging system output too low.	3. Test and repair charging system. Refer to Electrical, Charging,
	4. Battery has insufficient charge.	4. Test battery state-of-charge. Refer to Electrical, Battery System.
	5. Battery is sulfated or shorted.	5. Load test battery. Refer to Electrical, Battery System.
	6. Poor lighting circuit Z349/Z248 ground.	6. Test for voltage drop across Z349/248 ground locations. Refer to Electrical, Wiring Information.
FOG LAMP BULBS BURN OUT FREQUENTLY	1. Charging system output too high.	1. Test and repair charging system. Refer to Electrical, Charging.
	2. Loose or corroded terminals or splices in circuit.	2. Inspect and repair all connectors and splices. Refer to Electrical, Wiring Information.

FRONT FOG LAMP (Continued)

CONDITION	POSSIBLE CAUSES	CORRECTION
FOG LAMPS ARE DIM WITH ENGINE RUNNING ABOVE IDLE	1. Charging system output too low.	1. Test and repair charging system. Refer to Electrical, Charging.
	2. Poor lighting circuit Z349/Z248 ground.	2. Test for voltage drop across Z349/Z248 ground locations. Refer to Electrical, Wiring Information.
	3. High resistance in fog lamp circuit.	3. Test amperage draw of fog lamp circuit.
FOG LAMPS FLASH RANDOMLY	1. Poor lighting circuit Z349/Z248 ground.	1. Test for voltage drop across Z349/Z248 ground locations. Refer to Electrical, Wiring Information.
	2. Variable resistance in fog lamp circuit.	2. Test amperage draw of fog lamp circuit.
	3. Faulty fog lamp switch (part of headlamp switch).	3. Replace headlamp switch.
	4. Loose or corroded terminals or splices in circuit.	4. Inspect and repair all connectors and splices. Refer to Electrical, Wiring Information.
	5. Is relay engaging properly?	5. Verify function of fog lamp relay in IPM.
	6. PCI Bus Communication.	6. Verify PCI bus message (fog lamp info) transmitted from BCM and received by FCM.
FOG LAMPS DO NOT ILLUMINATE	1. Blown fuse for fog lamp.	1. Replace fuse. Refer to Electrical, Wiring Information.
	2. No Z349/Z248 ground at fog lamps.	2. Repair circuit ground. Refer to Electrical, Wiring Information.
	3. Faulty fog lamp switch (part of headlamp switch).	3. Replace headlamp switch.
	4. Broken connector terminal or wire splice in fog lamp circuit.	4. Repair connector terminal or wire splice.
	5. Faulty or burned out bulb.	5. Replace bulb.
	6. Is relay engaging?	6. Verify function of fog lamp relay in IPM.
	7. PCI Bus Communication.	7. Verify PCI bus message (fog lamp info) transmitted from BCM and received by FCM.

REMOVAL

(1) Disconnect and isolate the battery negative cable.

(2) From behind the bumper fascia, twist bulb counter-clockwise, and remove bulb.

(3) Remove the wire connector from the fog lamp bulb.

INSTALLATION

(1) Reconnect wire harness to bulb.

(2) Install bulb and twist clockwise.

(3) Install battery negative cable.

FRONT FOG LAMP UNIT

STANDARD PROCEDURE

STANDARD PROCEDURE - FRONT FOG LAMP UNIT ALIGNMENT

FOG LAMP UNIT ALIGNMENT

Prepare an alignment screen (Refer to 8 - ELECTRICAL/LAMPS/LIGHTING - EXTERIOR/HEADLAMP UNIT - STANDARD PROCEDURE). A properly aligned fog lamp will project a pattern on the alignment screen 100 mm (4 in.) below the fog lamp center line and straight ahead (Fig. 8). To improve visual interpretation of the fog lamp pattern on the alignment screen, the headlamps should be in the “off” position.

The fog lamps are adjusted by a adjustment screw at the top of the lamp.

STANDARD PROCEDURE - FRONT FOG LAMP UNIT ALIGNMENT - EXPORT

Prepare an alignment screen (Refer to 8 - ELECTRICAL/LAMPS/LIGHTING - EXTERIOR/HEADLAMP UNIT - STANDARD PROCEDURE). A properly aligned fog lamp will project a pattern on the alignment screen 200 mm (8 in.) below the fog lamp center line and straight ahead (Fig. 9). To improve visual interpretation of the fog lamp pattern on the alignment screen, the headlamps should be in the “off” position.

The fog lamps are adjusted by a adjustment screw located on the front side of the fog lamp unit.

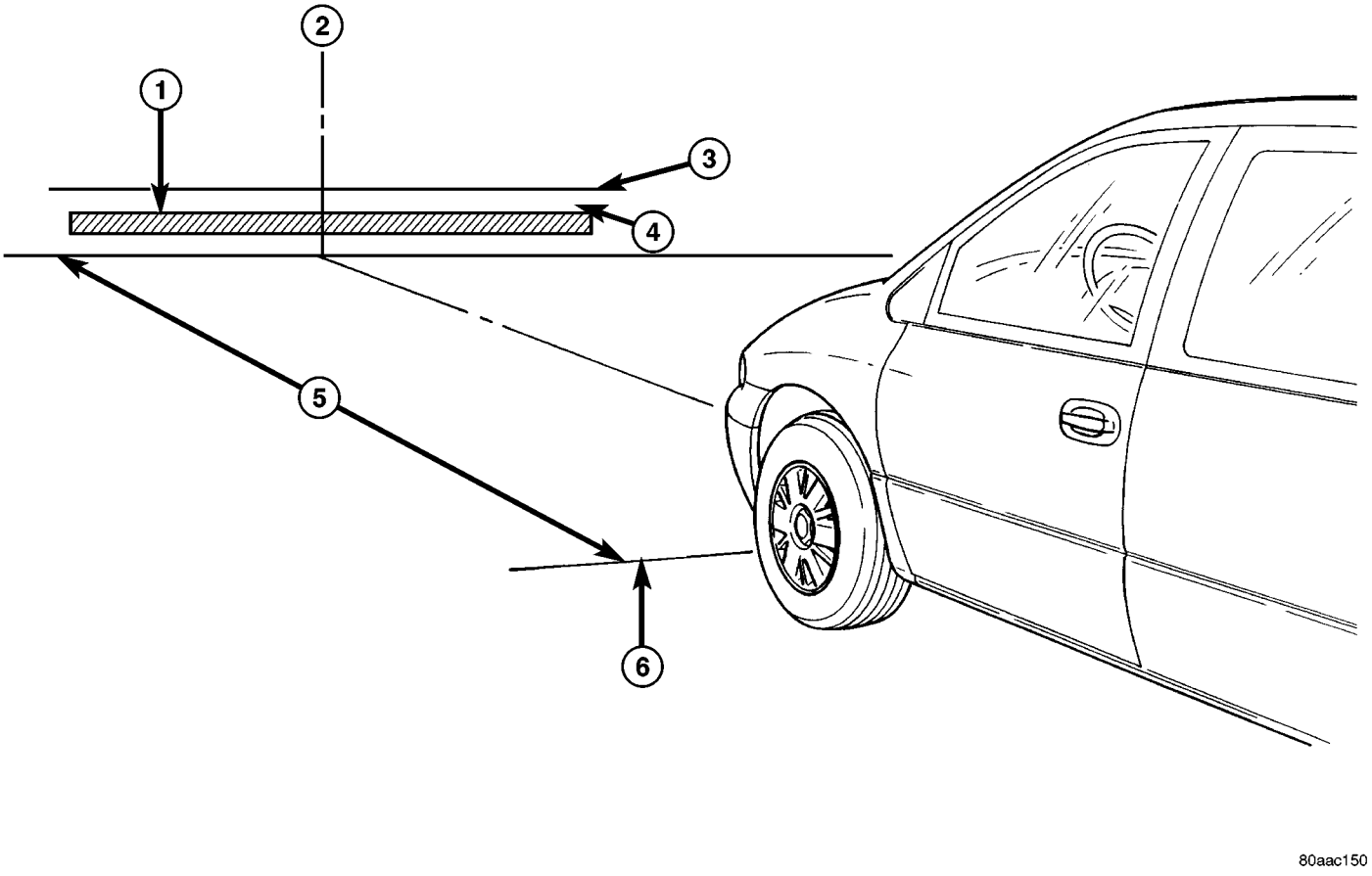

Fig. 8 FRONT FOG LAMP UNIT ALIGNMENT

1 - HIGH INTENSITY AREA
2 - CENTER OF VEHICLE
3 - HORIZONTAL CENTER OF FOG LAMP
4 - 100MM (4 IN.)
5 - 7.62 METERS (25 FT.)
6 - FRONT OF FOG LAMP

FRONT FOG LAMP UNIT (Continued)

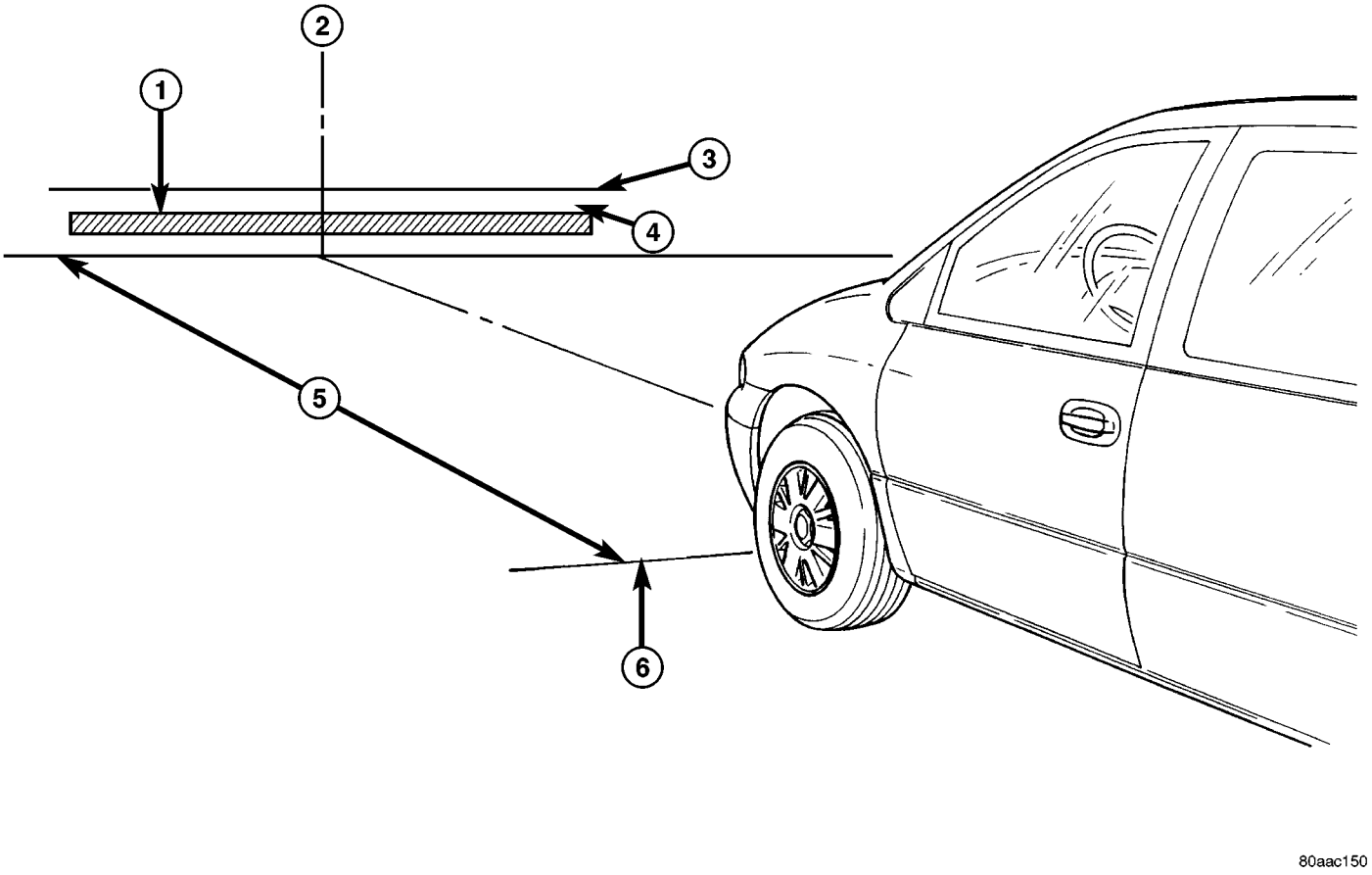

Fig. 9 FOG LAMP UNIT ALIGNMENT - EXPORT

1 - HIGH INTENSITY AREA	4 - 200 MM
2 - CENTER OF VEHICLE	5 - 10 METERS
3 - HORIZONTAL CENTER OF FOG LAMP UNIT	6 - FRONT OF FOG LAMP UNIT

REMOVAL

(1) Disconnect and isolate the battery negative cable.

(2) From behind the bumper fascia, disconnect the wire harness from the fog lamp bulb.

(3) Remove mounting screws.

INSTALLATION

(1) Install mounting screws.

(2) Reconnect the wire harness to the fog lamp bulb.

(3) Reconnect the battery negative cable.

HEADLAMP

DIAGNOSIS AND TESTING - HEADLAMP

When a vehicle experiences problems with the headlamp system, verify the condition of the battery connections, fuses, charging system, headlamp bulbs, wire connectors, relay, high beam switch, dimmer switch, and headlamp switch. Refer to the appropriate wiring information.

Each vehicle is equipped with various lamp assemblies. A good ground is necessary for proper lighting operation. Grounding is provided by the lamp socket when it comes in contact with the metal body, or through a separate ground wire.

When changing lamp bulbs check the socket for corrosion. If corrosion is present, clean it with a wire brush.

When it is necessary to remove components to service another, it should not be necessary to apply excessive force or bend a component to remove it. Before damaging a trim component, verify hidden fasteners or captured edges are not holding the component in place.

HEADLAMP DIAGNOSIS

CONDITION	POSSIBLE CAUSES	CORRECTION
HEADLAMPS ARE DIM WITH ENGINE IDLING OR IGNITION TURNED OFF.	1. Loose or corroded battery cables.	1. Clean and secure battery cable clamps and posts.
	2. Loose or worn generator drive belt.	2. Adjust or replace generator drive belt.
	3. Charging system output too low.	3. Test and repair charging system, refer to Electrical, Charging
	4. Battery has insufficient charge.	4. Test battery state-of-charge, refer to Electrical, Battery System.
	5. Battery is sulfated or shorted.	5. Load test battery, refer to Electrical, Battery System.
	6. Poor lighting circuit Z343/Z344-ground.	6. Test for voltage drop across Z343/Z344-ground locations, refer to Electrical, Wiring Diagram Information.
HEADLAMP BULBS BURN OUT FREQUENTLY.	1. Integrated Power Module (IPM) not controlling voltage.	1. Test and repair Integrated Power Module.
	2. Loose or corroded terminals or splices in circuit.	2. Inspect and repair all connectors and splices. Refer to Electrical, Wiring Information.
HEADLAMPS ARE DIM WITH ENGINE RUNNING ABOVE IDLE.	1. Charging system output too low.	1. Test and repair charging system, refer to Electrical, Wiring Information.
	2. Poor lighting circuit Z343/Z344-ground.	2. Test for voltage drop across Z343/Z344-ground locations, refer to Electrical, Wiring Information.
	3. High resistance in headlamp circuit.	3. Test amperage draw of headlamp circuit.

HEADLAMP (Continued)

CONDITION	POSSIBLE CAUSES	CORRECTION
HEADLAMPS FLASH RANDOMLY	1. Poor lighting circuit Z343/Z344-ground.	1. Test for voltage drop across Z343/Z344-ground locations, refer to Electrical, Wiring Information.
	2. Variable resistance in headlamp circuit.	2. Test amperage draw of headlamp circuit.
	3. Loose or corroded terminals or splices in circuit.	3. Inspect and repair all connectors and splices, refer to Electrical, Wiring Information.
	4. Faulty headlamp switch.	4. Replace headlamp switch.
HEADLAMPS DO NOT ILLUMINATE.	1. No voltage to headlamps.	1. Repair open headlamp circuit, refer to Electrical, Wiring Information.
	2. No Z343/Z344-ground at headlamps.	2. Repair circuit ground, refer to Electrical, Wiring Information.
	3. Broken connector terminal or wire splice in headlamp circuit.	3. Repair connector terminal or wire splice.
	4. Faulty or burned out bulb.	4. Replace headlamp bulb(s).
	5. Body Control Module malfunction.	5. Refer to appropriate Body Control Module diagnostics.
	6. PCI Bus Communication	6. Verify messages being transmitted by BCM and received by FCM.
	7. IPM/FCM Malfunction.	7. Refer to appropriate IPM/FCM diagnostics.
HEADLAMPS ON WITH IGNITION IN RUN, WITH HEADLAMP SWITCH OFF.	1. Faulty headlamp switch.	1. Replace headlamp switch (review BCM logged faults).
	2. Diagnostic tool indicates (4.7 - 5.0V) on headlamp switch input to BCM.	2. Inspect and repair terminals, connectors and open circuits.
	3. PCI Bus Communication.	3. Verify messages being transmitted by BCM and received by FCM.

REMOVAL

DODGE

(1) Disconnect and isolate the battery negative cable.
(2) Remove headlamp unit retaining screws.
(3) Remove headlamp unit to expose back of unit.
(4) Remove wiring connector from bulb.
(5) Rotate headlamp bulb retaining ring counter-clockwise.
(6) Pull headlamp bulb and remove from headlamp unit (Fig. 10).

CHRYSLER

(1) Disconnect and isolate the battery negative cable.
(2) Remove headlamp unit retaining screws.
(3) Remove headlamp unit to expose back of unit.

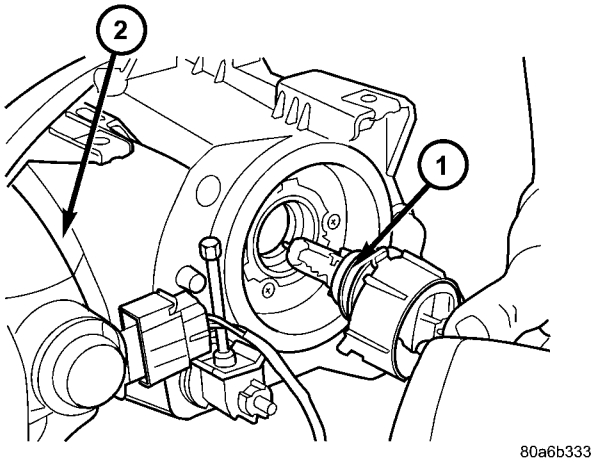

Fig. 10 HEADLAMP - DODGE

1 - HEADLAMP
2 - HEADLAMP UNIT

HEADLAMP (Continued)

(4) Remove wiring connector from bulb by sliding red latch lock rearward and then depressing release tab.

(5) Rotate headlamp bulb retaining ring counter-clockwise.

INSTALLATION

DODGE

(1) Install headlamp bulb to the headlamp unit.
(2) Install headlamp bulb retaining ring.
(3) Connect wiring connector to bulb.
(4) Install the headlamp unit.
(5) Install headlamp unit retaining screws.
(6) Connect the battery negative cable.

CHRYSLER

(1) Install headlamp bulb to the headlamp unit.

(2) Rotate bulb clockwise to lock bulb in headlamp unit.

(3) Connect wiring connector to bulb and slide red latch lock forward.
(4) Install the headlamp unit.
(5) Install headlamp unit retaining screws.
(6) Connect the battery negative cable.

HEADLAMP SWITCH

DIAGNOSIS AND TESTING - HEADLAMP SWITCH

Using a Digital Multi-meter, perform the HEADLAMP SWITCH CONTINUITY test and refer to (Fig. 11).

If the Headlamp Switch is not within specifications replace the switch.

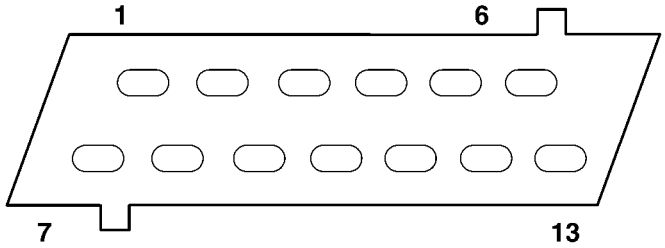

Fig. 11 HEADLAMP SWITCH CONNECTOR

HEADLAMP SWITCH CONTINUITY

HEADLAMP SWITCH POSITION	13 - WAY CONNECTOR TERMINAL	RESISTANCE
OFF	11 TO 6	3651 - 3729 Ω
PARKING LAMPS ON	11 TO 6	1697 - 2517 Ω
PARKING LAMPS WITH FRONT FOG LAMPS ON	11 TO 6	5765 - 5886 Ω
HEADLAMPS ON	11 TO 6	788 - 809 Ω
AUTO ON	11 TO 6	10056 - 10264 Ω
HEADLAMPS ON WITH FRONT FOG LAMPS	11 TO 6	1171 - 1200 Ω
AUTO ON WITH FRONT FOG LAMPS ON	11 TO 6	24278 - 24773 Ω
DIMMER POSITION	**13 - WAY CONNECTOR TERMINAL**	**RESISTANCE**
DOME	12 TO 6	15568 - 23357 Ω
PARADE	12 TO 6	5168 - 7757 Ω
DIM HIGH	12 TO 6	2288 - 3437 Ω
DIM LOW	12 TO 6	688 - 1037 Ω
OFF	12 TO 6	240 - 365 Ω

REMOVAL

(1) Disconnect and isolate the battery negative cable.

(2) Remove the Instrument Panel Lower Steering Column Cover. Refer to Body, Instrument Panel, Lower Steering Column Cover, Removal.

(3) Reach up behind the left side of the instrument panel and depress spring clip on top or bottom of headlamp switch. Firmly push out on the headlamp switch assembly.

(4) Disconnect the wiring connectors.
(5) Remove switch from vehicle.

INSTALLATION

(1) Connect the wiring connectors.

(2) Place headlamp switch assembly into position and firmly snap into place.

(3) Install the Instrument Panel Lower Steering Column Cover. Refer to Body, Instrument Panel, Lower Steering Column Cover, Installation.

(4) Connect the battery negative cable.

HEADLAMP UNIT

STANDARD PROCEDURE - HEADLAMP UNIT ALIGNMENT

HEADLAMP UNIT ALIGNMENT PREPARATION

(1) Verify headlamp dimmer switch and high beam indicator operation.

(2) Inspect and correct damaged or defective components that could interfere with proper headlamp alignment.

(3) Verify proper tire inflation.

(4) Clean headlamp lenses.

(5) Verify that luggage area is loaded as the vehicle is routinely used.

(6) Vehicles equipped with automatic load leveling suspension should be driven normally for approximately 5 km (3 miles) before attempting a proper headlamp unit alignment.

(7) Fuel tank should be FULL. Add 2.94 kg (6.5 lbs.) of weight over the fuel tank for each estimated gallon of missing fuel.

ALIGNMENT SCREEN PREPARATION

(1) Position vehicle on a level surface perpendicular to a flat wall 7.62 meters (25 ft.) away from front of headlamp lens (Fig. 12).

(2) If necessary, tape a line on the floor 7.62 meters (25 ft.) away from and parallel to the wall.

(3) Rock vehicle side-to-side three times and allow suspension to stabilize.

(4) Jounce front suspension three times by pushing downward on front bumper and releasing.

(5) Measure the distance from the center of headlamp lens to the floor. Transfer measurement to the alignment screen (with tape). Use this line for up/down adjustment reference.

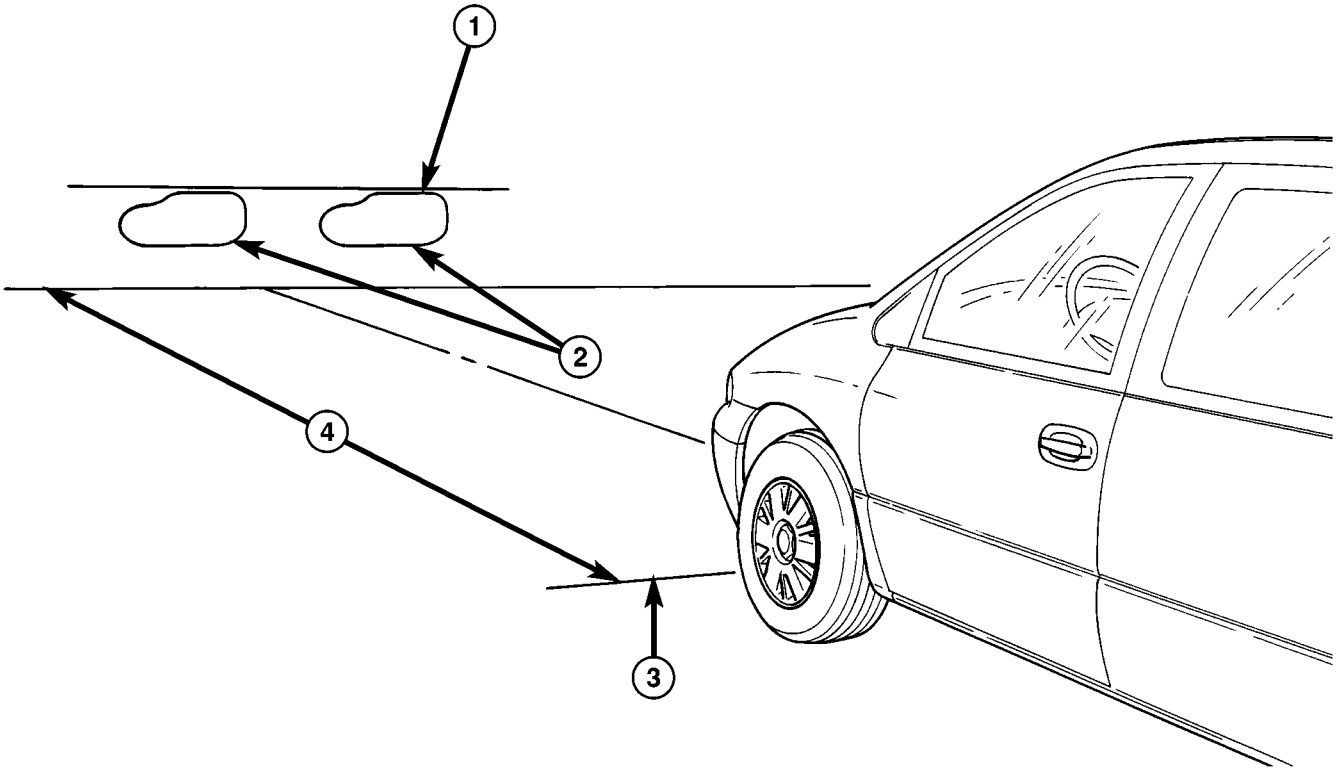

80aabefe

Fig. 12 HEADLAMP ALIGNMENT SCREEN

1 - CENTER OF HEADLAMPS
2 - HEADLAMP BEAM
3 - FRONT OF HEADLAMP
4 - 7.62 METERS (25 FT.)

HEADLAMP UNIT (Continued)

HEADLAMP UNIT ADJUSTMENT

The low beam headlamp will project on the screen upper edge of the beam (cut-off) at the horizontal lamp centerline ± 50 mm (2 in.). Horizontal aim is preset and can not be adjusted. The high beam pattern should be correct when the low beams are aligned properly (Fig. 12). To adjust headlamp vertical alignment, rotate adjustment screw (Fig. 13) to achieve the specified low beam cut-off location.

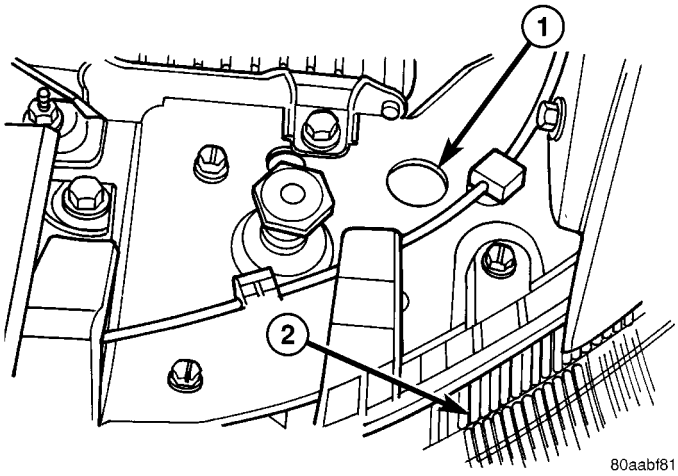

Fig. 13 HEADLAMP UNIT ADJUSTMENT

1 - ADJUSTMENT LOCATION
2 - HEADLAMP UNIT

REMOVAL

(1) Disconnect and isolate the battery negative cable.

(2) Remove the three retaining screws (Fig. 14).

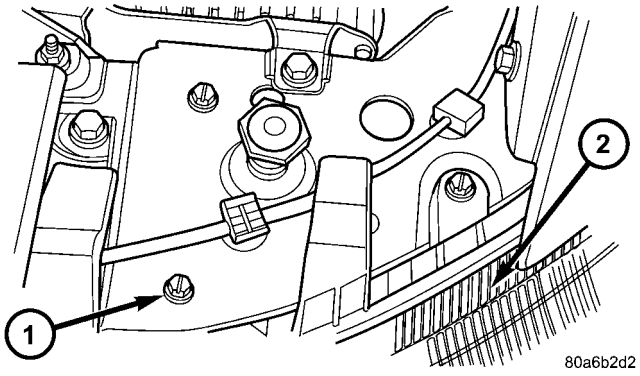

Fig. 14 HEADLAMP UNIT FASTENERS

1 - HEADLAMP UNIT RETAINING SCREW
2 - HEADLAMP UNIT

(3) Disconnect the wiring harness from the bulbs (Fig. 15).

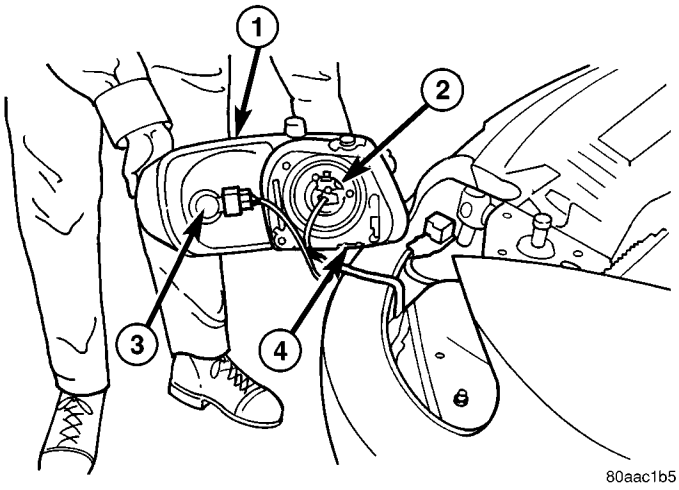

Fig. 15 HEADLAMP UNIT

1 - HEADLAMP UNIT
2 - HEADLAMP
3 - PARK/TURN SIGNAL LAMP
4 - WIRE HARNESS RETAINER

(4) Remove wire harness retainer from back of headlamp unit.

(5) Remove the headlamp unit.

INSTALLATION

(1) Reconnect wire harness to the bulbs.
(2) Install wire harness retainer to headlamp unit.
(3) Install the three retaining screws.
(4) Reconnect the battery negative cable.

HEADLAMP UNIT - EXPORT

STANDARD PROCEDURE - HEADLAMP UNIT ALIGNMENT - EXPORT

HEADLAMP UNIT ALIGNMENT PREPARATION

(1) Verify that the headlamp leveling switch is in the “0” position.

(2) Inspect and correct damaged or defective components that could interfere with proper headlamp alignment.

(3) Verify proper tire inflation.

(4) Clean headlamp lenses.

(5) Verify that luggage area is loaded as the vehicle is routinely used.

(6) Vehicles equipped with automatic load leveling suspension should be driven normally for approximately 5 km (3 miles) before attempting a proper headlamp unit alignment.

(7) Fuel tank should be FULL. Add 2.94 kg (6.5 lbs.) of weight over the fuel tank for each estimated gallon of missing fuel.

HEADLAMP UNIT - EXPORT (Continued)

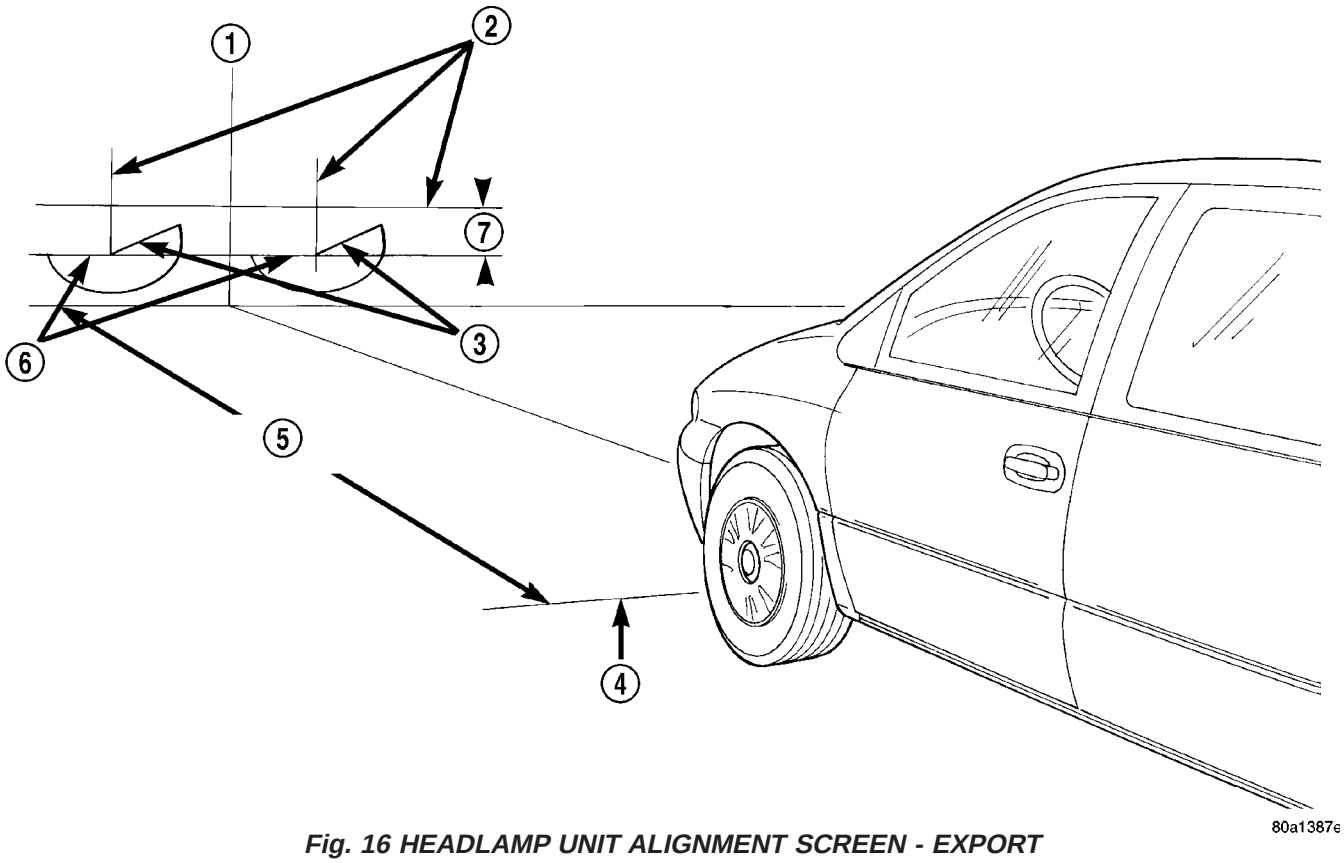

Fig. 16 HEADLAMP UNIT ALIGNMENT SCREEN - EXPORT

1 - CENTER OF VEHICLE
2 - CENTER OF HEADLAMPS
3 - 15° CUT-OFF LINE
4 - FRONT OF HEADLAMP
5 - 10 METERS (32.8 FT.)
6 - HORIZONTAL CUT-OFF LINE
7 - 100 mm (3.9 in.)

ALIGNMENT SCREEN PREPARATION

(1) Position vehicle on a level surface perpendicular to a flat wall 10 meters (32.8 ft.) away from front of headlamp lens (Fig. 16).

(2) If necessary, tape a line on the floor 10 meters (32.8 ft.) away from and parallel to the wall.

(3) Rock vehicle side-to-side three times and allow suspension to stabilize.

(4) Jounce front suspension three times by pushing downward on front bumper and releasing.

(5) Measure the distance from the center of headlamp lens to the floor. Transfer measurement to the alignment screen (with tape). Use this line for up/down adjustment reference.

HEADLAMP UNIT ADJUSTMENT

The low beam headlamp will project on the screen upper edge of the beam (cut-off) at the horizontal lamp cut-off line ± 20 mm (0.75 in.). The high beam pattern should be correct when the low beams are aligned properly (Fig. 16). To adjust headlamp alignment, rotate adjustment screws (Fig. 17) to achieve the specified low beam cut-off location.

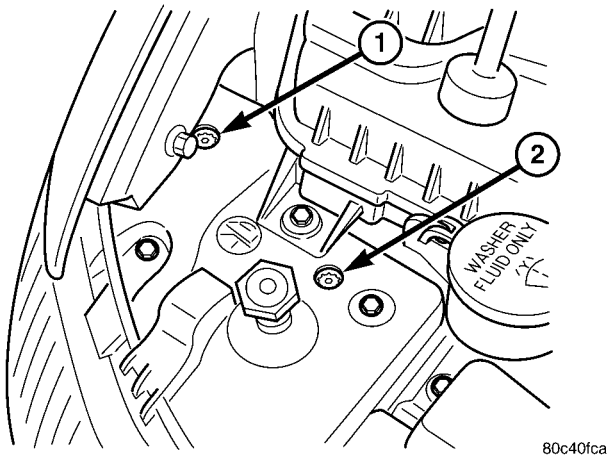

Fig. 17 HEADLAMP UNIT ADJUSTMENT - EXPORT

1 - HEADLAMP ADJUSTMENT - HORIZONTAL
2 - HEADLAMP ADJUSTMENT - VERTICAL

HEADLAMP UNIT - EXPORT (Continued)

REMOVAL

(1) Disconnect and isolate the battery negative cable.
(2) Remove the three retaining screws.
(3) Disconnect the central wiring harness connector from the headlamp unit.
(4) Remove the headlamp unit from the vehicle by rotating the turn signal area out and towards the center of the vehicle.

INSTALLATION

(1) Connect the wiring harness to the headlamp unit's central connector.
(2) Place the headlamp unit in the headlamp unit pocket in front end first by placing the inboard side behind the fascia. Complete the installation by rotating the turn signal area of the headlamp into place.
(3) Place headlamp unit into headlamp unit pocket in front end.
(4) Install the three retaining screws.
(5) Connect the battery negative cable.
(6) Verify vehicle and system operation.

LICENSE LAMP

REMOVAL

(1) Disconnect and isolate the battery negative cable.
(2) Remove two screws (Fig. 18).

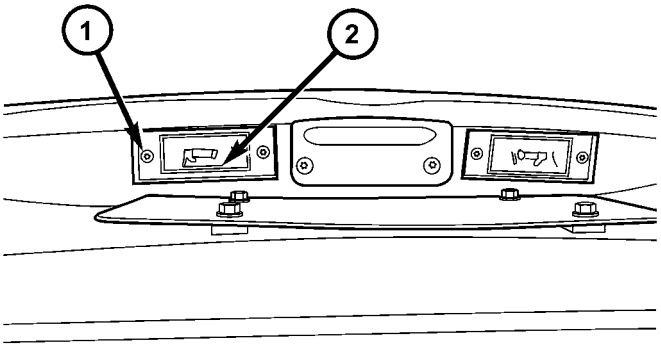

Fig. 18 LICENSE PLATE LAMP UNITS

1 - SCREW
2 - LICENSE PLATE LAMP

(3) Twist bulb socket and remove (Fig. 19).
(4) Pull bulb from socket.

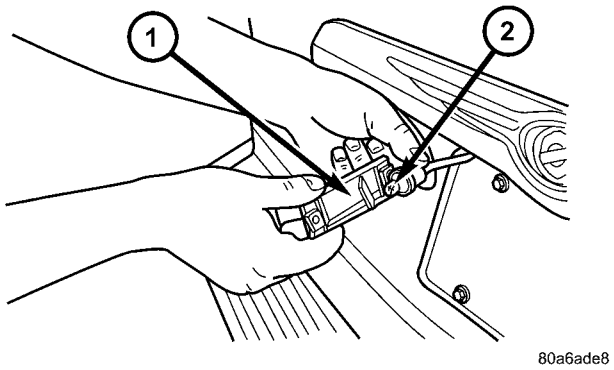

Fig. 19 LICENSE PLATE LAMP - REMOVE/INSTALL

1 - LICENSE PLATE LAMP UNIT
2 - BULB

INSTALLATION

(1) Push bulb into socket.
(2) Install socket into lamp.
(3) Install two screws.
(4) Reconnect the battery negative cable.

MULTI-FUNCTION SWITCH

DESCRIPTION - TURN SIGNAL SYSTEM

The turn signals are actuated with a lever on Multi-Function Switch, located on the left side of the steering wheel. The signals are automatically turned off by a canceling cam (two lobes molded to the clock spring mechanism). The cam comes in contact with the cancel actuator on the turn signal (multi-function) switch assembly. Either cam lobe, pushing on the cancel actuator, returns the switch to the OFF position. The multi-function switch is a resistive MUX switch that feeds inputs to the BCM.

OPERATION - TURN SIGNAL SYSTEM

Lane change signaling is actuated by applying partial turn signal stalk movement toward the direction desired until the indicator lamps flashes in the instrument cluster. When the switch stalk is released the stalk will spring back into the neutral position turning OFF the turn signal.

With the ignition switch ON and the turn signal switch stalk actuated left or right, current flows through the:

- Multi-function switch
- Body Control Module
- Integrated Power Module (IPM)
- Turn indicator lamp
- Front and rear turn signal bulbs.

A chime will sound after the vehicle has traveled a distance of approximately 1.0 mile and a speed of 15 mph, with the turn signal ON.

MULTI-FUNCTION SWITCH (Continued)

DIAGNOSIS AND TESTING - MULTI-FUNCTION SWITCH

To test turn signal, headlamp beam select and optical horn portion of the multi-function switch:

(1) Remove the multi-function switch, refer to Electrical, Lamps/Lighting - Exterior, Multi-Function Switch, Removal, and Installation.

(2) Using an ohmmeter check the resistance readings between multi-function switch pins. Refer to Wiring Diagrams for proper pin numbers and the MULTI-FUNCTION SWITCH RESISTANCE table.

MULTI-FUNCTION SWITCH RESISTANCE

SWITCH POSITION	PIN NUMBER	RESISTANCE
LEFT	2 AND 3	2.7 Ω ± 5%
RIGHT	2 AND 3	1K Ω ± 5%
OPTICAL HORN	2 AND 4	1.7K Ω ± 5%
HI BEAM	2 AND 4	2.32K Ω ± 5%

REMOVAL

(1) Disconnect and isolate battery negative cable.

(2) Remove upper and lower steering column shrouds. Refer to Steering, Column, Shroud, Removal.

(3) Disconnect wire connector from back of multi-function switch.

(4) Remove screws holding multi-function switch to steering column adapter collar.

(5) Remove the multi-function switch.

INSTALLATION

(1) Position the switch on to the steering column.

(2) Install the two retaining screws.

(3) Connect the wire harness connector.

(4) Install the upper and lower steering column shrouds. Refer to Steering, Column, Shroud, Installation.

(5) Connect the battery negative cable.

PARK/TURN SIGNAL LAMP

REMOVAL

(1) Disconnect and isolate battery negative cable.

(2) Remove headlamp retaining screws.

(3) Twist socket counter - clockwise and remove (Fig. 20).

(4) Pull bulb from socket.

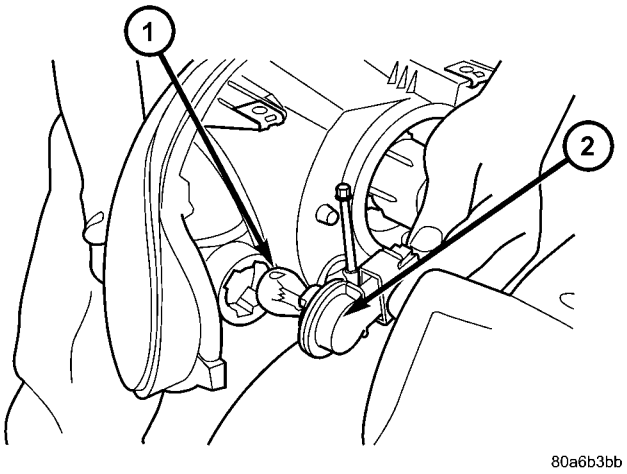

Fig. 20 PARK/TURN SIGNAL LAMP

1 - PARK/TURN SIGNAL LAMP
2 - LAMP SOCKET

INSTALLATION

(1) Push bulb into socket.

(2) Twist socket into headlamp.

(3) Install headlamp retaining screws.

(4) Reconnect battery negative cable.

TAIL LAMP

REMOVAL

(1) Disconnect and isolate the battery negative cable.

(2) Remove the tail lamp unit. (Refer to 8 - ELECTRICAL/LAMPS/LIGHTING - EXTERIOR/TAIL LAMP UNIT - REMOVAL).

(3) Squeeze the tabs on the bulb socket and remove from tail lamp unit (Fig. 21).

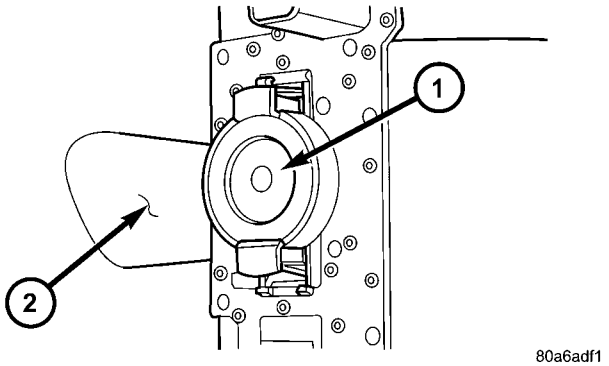

Fig. 21 TAIL LAMP SOCKET

1 - LAMP SOCKET
2 - TAIL LAMP UNIT

(4) Pull bulb from lamp socket.

TAIL LAMP (Continued)

INSTALLATION

(1) Push bulb into the lamp socket.

(2) Install bulb socket into the tail lamp unit. Ensure that both retaining tabs engage with an audible click.

(3) Install the tail lamp unit. (Refer to 8 - ELECTRICAL/LAMPS/LIGHTING - EXTERIOR/TAIL LAMP UNIT - INSTALLATION).

(4) Reconnect the battery negative cable.

TAIL LAMP UNIT

REMOVAL

(1) Disconnect and isolate the battery negative cable.

(2) Raise the liftgate.

(3) Remove the two retaining fasteners by prying under the head of the fastener with a flat bladed tool (Fig. 22).

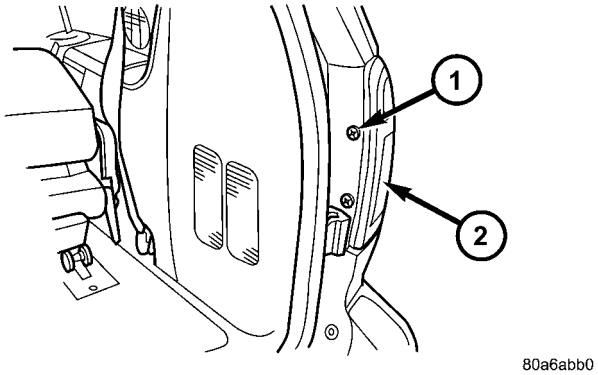

Fig. 22 TAIL LAMP UNIT FASTENERS

1 - TAIL LAMP UNIT FASTENER
2 - TAIL LAMP UNIT

(4) Rotate the lamp away from the vehicle body to disengage hook from the rubber grommet in the quarter panel opening.

(5) Disconnect wire harness connector from tail lamp unit by sliding the red lock, then pressing release tab.

INSTALLATION

(1) Reconnect wire harness connector to the tail lamp. Slide red connector lock into position.

(2) Engage hook into rubber grommet in quarter panel opening.

(3) Place lamp into position on quarter panel.

(4) Insert the two retaining fasteners by pressing into position (insert into the hole first, followed by the slot). Ensure that the head of the fastener is open before inserting.

(5) Close the liftgate.

(6) Reconnect the battery negative cable.

LAMPS/LIGHTING - INTERIOR

TABLE OF CONTENTS

page

LAMPS/LIGHTING - INTERIOR
SPECIFICATIONS
INTERIOR LAMPS 20
CENTER CONSOLE LAMP
REMOVAL 21
INSTALLATION 21
CENTER CONSOLE LAMP SWITCH
REMOVAL 21
INSTALLATION 21
CLUSTER ILLUMINATION LAMPS
REMOVAL 21
INSTALLATION 21
COURTESY LAMP
REMOVAL 21
INSTALLATION 21

page

DOME/CARGO LAMP
REMOVAL 22
INSTALLATION 22
GLOVE BOX LAMP SWITCH
REMOVAL 22
INSTALLATION 22
LIFTGATE LAMP
REMOVAL 22
INSTALLATION 22
READING LAMP
REMOVAL 22
INSTALLATION 23
VANITY LAMP
REMOVAL 24
INSTALLATION 24

LAMPS/LIGHTING - INTERIOR

SPECIFICATIONS

INTERIOR LAMPS

BULB APPLICATION TABLE

LAMP	BULB
ABS	LED
AIRBAG	LED
ALARM SET	LED
BRAKE SYSTEM WARNING	LED
CONSOLE	194
CRUISE INDICATOR	VFD*
DOME/RAIL LAMPS	578
DOOR AJAR INDICATOR	LED
DOOR COURTESY LAMP	578
FRONT DOOR COURTESY	567
GLOVE BOX	194
HIGH BEAM INDICATOR	LED
CLUSTER ILLUMINATION	PC74
LIFTGATE	578
LIFTGATE AJAR	LED
LOW FUEL INDICATOR	LED
LOW WASHER FLUID INDICATOR	LED
MIL	LED
OIL INDICATOR	LED
OVERHEAD CONSOLE READING	PC579
PRNDL INDICATOR (BASE CLUSTER)	LED
PRNDL INDICATOR	VFD
READING	578
SEAT BELT INDICATOR	LED
TEMPERATURE INDICATOR	LED
TIRE PRESSURE WARNING	LED
TRAC OFF INDICATOR	VFD*
VISOR VANITY	6501966
VOLTAGE INDICATOR	LED
* VFD = VACUUM FLUORESCENT DISPLAY	

CENTER CONSOLE LAMP

REMOVAL

(1) Disconnect and isolate the battery negative cable.
(2) Open up console lid.
(3) Remove console tray.
(4) Using a trim stick (special tool #C-4755) or equivalent, gently pry down on lamp. Make sure not to let lamp fall into console base.

NOTE: If preferred, a 5/16 piece of hose approximately 4–6 inches long may be used to pull lamp from socket. Push hose over end of lamp and pull down.

INSTALLATION

NOTE: If preferred, a 5/16 piece of hose approximately 4–6 inches long may be used to install the new lamp. Push lamp into hose just far enough to hold bulb. Locate the socket slot and push firmly up. Make sure not to let lamp fall into console base. When bulb is seated, twist hose 1/4 turn to remove from lamp.

(1) Place lamp in socket slot and push firmly up. Make sure not to let lamp fall into console base.
(2) Install the console tray.
(3) Close console lid.
(4) Connect the battery negative cable.

CENTER CONSOLE LAMP SWITCH

REMOVAL

(1) Disconnect and isolate the battery negative cable.
(2) Open console lid and remove tray.
(3) Using a flat bladed tool, pry up on the switch.
(4) Remove bulb from switch.

INSTALLATION

(1) Install bulb into switch.
(2) Push switch into console opening.
(3) Install tray and close lid.
(4) Connect battery negative cable.

CLUSTER ILLUMINATION LAMPS

REMOVAL

(1) Remove the Instrument Cluster. Refer to Electrical, Instrument Cluster, Removal.
(2) Turn over cluster and expose the illumination bulb sockets.
(3) Identify which bulb is defective and twist it out of the cluster using a counterclockwise motion.

INSTALLATION

(1) Install the new bulb socket into the cluster using a clockwise motion.
(2) Install the Instrument Cluster. Refer to Electrical, Instrument Cluster, Installation.

COURTESY LAMP

REMOVAL

(1) Disconnect and isolate the battery negative cable.
(2) Using a trim stick, pry lamp from door panel (Fig. 1).

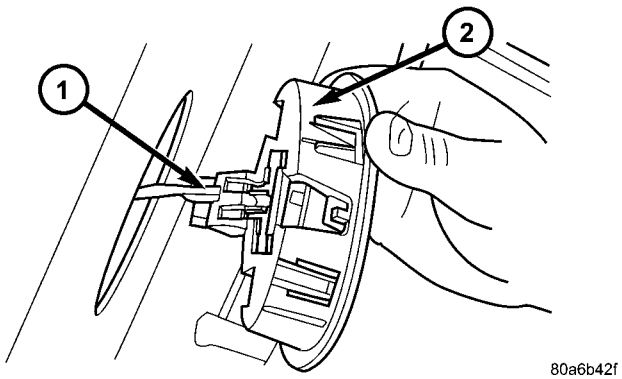

Fig. 1 COURTESY LAMP

1 - WIRE HARNESS
2 - COURTESY LAMP

(3) Disconnect wire harness from the lamp.
(4) Remove lens from the lamp and remove bulb.

INSTALLATION

(1) Install bulb and lens to lamp.
(2) Reconnect wire harness to lamp.
(3) Press lamp into the door panel.
(4) Reconnect battery negative cable.

DOME/CARGO LAMP

REMOVAL

(1) Disconnect and isolate the battery negative cable.
(2) Using a flat bladed tool, pry off the lamp lens.
(3) Remove bulb from lamp.

INSTALLATION

(1) Install bulb to lamp.
(2) Press lens into place.
(3) Connect battery negative cable.

GLOVE BOX LAMP SWITCH

REMOVAL

(1) Disconnect and isolate the battery negative cable.
(2) Open glove box door.
(3) Push switch through from behind (Fig. 2).

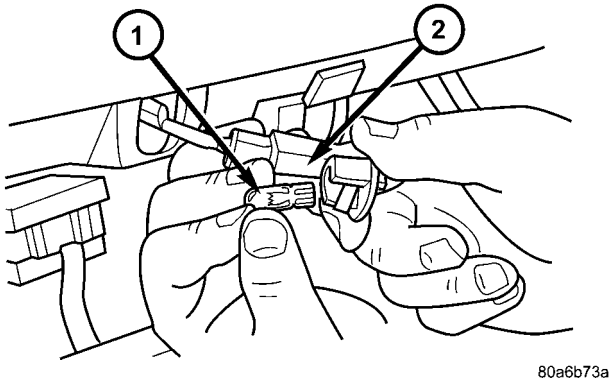

Fig. 2 GLOVE BOX LAMP/SWITCH

1 - GLOVE BOX BULB
2 - GLOVE BOX LAMP SWITCH

(4) Disconnect wire harness from switch.
(5) Pull bulb from switch.

INSTALLATION

(1) Push bulb into switch.
(2) Connect wire harness to switch.
(3) Push switch into instrument panel.
(4) Close glove box door.
(5) Reconnect the battery negative cable.

LIFTGATE LAMP

REMOVAL

(1) Disconnect and isolate the battery negative cable.
(2) Using a flat bladed tool, pry lamp from trim panel (Fig. 3).

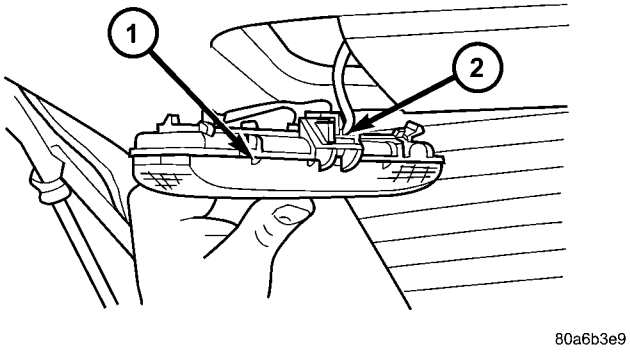

Fig. 3 LIFTGATE LAMP

1 - LIFTGATE LAMP
2 - WIRE HARNESS

(3) Disconnect wire harness connector from lamp.
(4) Pry off lens and remove bulb.

INSTALLATION

(1) Install bulb and snap lens into place.
(2) Reconnect wire harness connector to lamp.
(3) Position lamp onto trim panel and snap into place.
(4) Reconnect battery negative cable.

READING LAMP

REMOVAL

The front reading lamps are incorporated into the overhead console. If the reading lamps require replacement, the overhead console must be replaced. (Refer to 8 - ELECTRICAL/OVERHEAD CONSOLE - REMOVAL). The rear reading lamps are incorporated into the assist handle. If the rear reading lamps require replacement, the assist handle must be replaced. (Refer to 23 - BODY/INTERIOR/ASSIST HANDLE - REMOVAL). The bulbs can be serviced separately.

READING LAMP (Continued)

(1) Disconnect and isolate the battery negative cable.

(2) Using a flat bladed tool, pry off the lamp lens (Fig. 4), (Fig. 5).

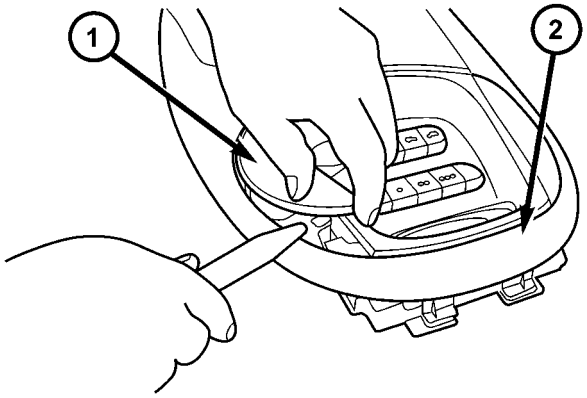

Fig. 4 OVERHEAD CONSOLE

1 - LAMP LENS
2 - OVERHEAD CONSOLE

(3) Remove bulb from lamp (Fig. 6), (Fig. 7).

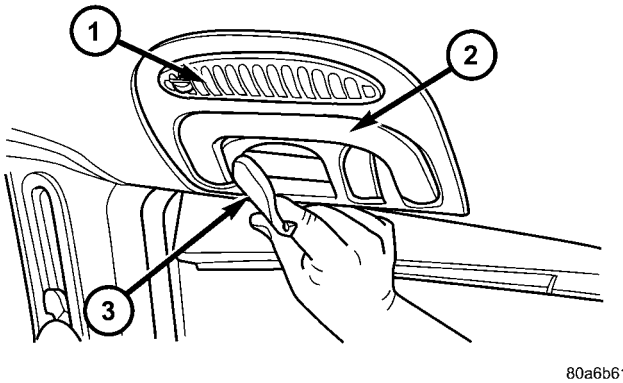

Fig. 5 COURTESY/READING LAMP

1 - HVAC LOUVER
2 - ASSIST HANDLE
3 - LAMP LENS

INSTALLATION

(1) Install bulb to lamp.
(2) Press lens into place.
(3) Reconnect the battery negative cable.

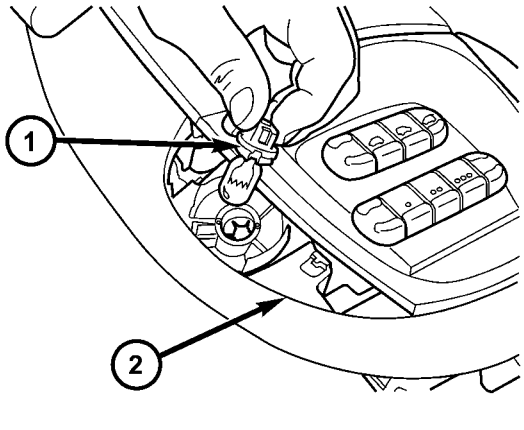

Fig. 6 OVERHEAD CONSOLE LAMP

1 - LAMP
2 - OVERHEAD CONSOLE

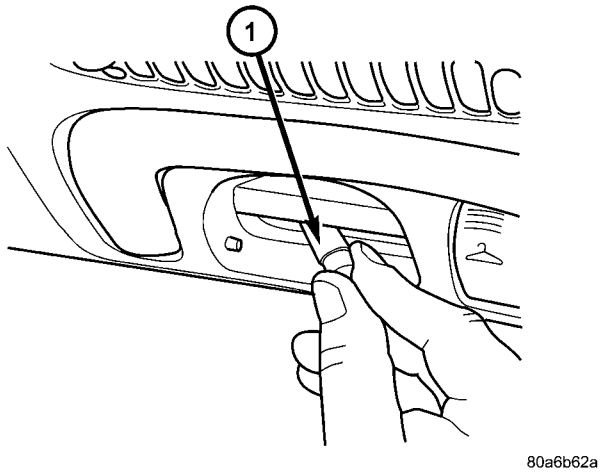

Fig. 7 COURTESY/READING LAMP

1 - COURTESY/READING LAMP

VANITY LAMP

REMOVAL

The vanity lamp is incorporated into the visor assembly. If the vanity lamp needs to be replaced, the entire visor must be replaced. The bulbs are serviced separately.

(1) Disconnect and isolate the battery negative cable.

(2) Using a pick or other suitable tool, pry the lens from the lamp (Fig. 8).

(3) Remove bulb.

INSTALLATION

(1) Install bulb.

(2) Snap lamp lens into position.

(3) Connect the battery negative cable.

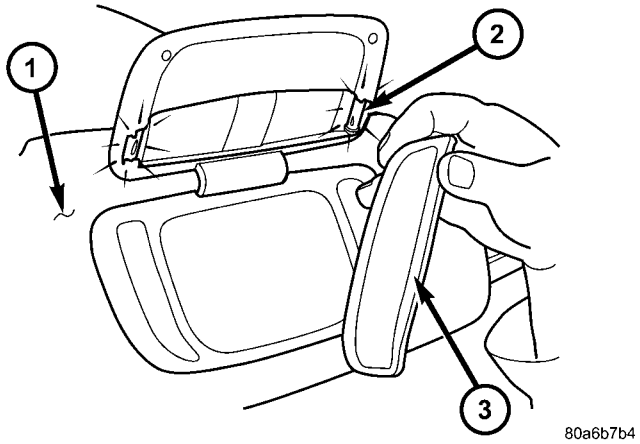

Fig. 8 VANITY LAMP

1 - VISOR
2 - VISOR/VANITY LAMP
3 - LENS

MESSAGE SYSTEMS

TABLE OF CONTENTS

	page		page
MESSAGE CENTER	**1**	**OVERHEAD CONSOLE**	**2**

MESSAGE CENTER

TABLE OF CONTENTS

	page		page
MESSAGE CENTER		INSTALLATION	1
REMOVAL	1		

MESSAGE CENTER

REMOVAL

(1) Disconnect and isolate the battery negative cable.

(2) Using a trim stick (special tool #C-4755) or equivalent, gently pry up on the front side of the message center and lift out of instrument panel opening.

(3) Disconnect the wire connector from the back of message center.

(4) Remove message center from vehicle.

NOTE: If the message center lamp needs replacing, twist out defective bulb socket and replace with a known good bulb and socket.

INSTALLATION

(1) Connect the wiring connector to message center.

(2) Place message center in position on instrument panel and firmly snap into place.

(3) Connect battery negative cable.

OVERHEAD CONSOLE

TABLE OF CONTENTS

page

OVERHEAD CONSOLE
DESCRIPTION 2
DIAGNOSIS AND TESTING
OVERHEAD CONSOLE 3
STANDARD PROCEDURE
COMPASS CALIBRATION 4
COMPASS DEMAGNETIZING 5
COMPASS VARIATION ADJUSTMENT 5
REMOVAL 6
INSTALLATION 6
SPECIAL TOOLS
OVERHEAD CONSOLE 7
ELECTRONIC VEHICLE INFO CENTER
DESCRIPTION 7
OPERATION 7
DIAGNOSIS AND TESTING
ELECTRONIC VEHICLE INFORMATION CENTER 8
STANDARD PROCEDURE
ELECTRONIC VEHICLE INFORMATION CENTER PROGRAMMING 8
REMOVAL 9
INSTALLATION 10
COMPASS/MINI-TRIP COMPUTER
DESCRIPTION 10

page

OPERATION 10
DIAGNOSIS AND TESTING
COMPASS MINI-TRIP COMPUTER 10
REMOVAL 10
INSTALLATION 10
UNIVERSAL TRANSMITTER
DESCRIPTION 11
DIAGNOSIS AND TESTING
UNIVERSAL TRANSMITTER 11
STANDARD PROCEDURE
SETTING TRANSMITTER CODES 12
ERASING TRANSMITTER CODES 12
REMOVAL 12
AMBIENT TEMP SENSOR
DESCRIPTION 12
OPERATION 12
DIAGNOSIS AND TESTING
AMBIENT TEMPERATURE SENSOR 12
AMBIENT TEMPERATURE SENSOR CIRCUIT 12
REMOVAL 13
INSTALLATION 13

OVERHEAD CONSOLE

DESCRIPTION

Three overhead consoles options are available on this vehicle. These options are:

- The Electronic Vehicle Information Center (EVIC)
- The Compass Mini-Trip Computer (CMTC)

All consoles are equipped with two reading/courtesy lamps and if the vehicle is equipped with a power liftgate or power sliding door(s) the overhead console will also include switches for these features. The overhead console is mounted with one screw and two snap clips to a molded plastic retainer bracket located above the headliner.

DESCRIPTION - COMPASS

All overhead consoles include compass information. While in the compass/temperature mode, the compass will display the direction in which the vehicle is pointed using the eight major compass headings (Examples: north is N, northeast is NE). The self-calibrating compass unit requires no adjusting in normal use. The only calibration that may be necessary is to drive the vehicle in three complete circles at 5 to 8 kilometers-per-hour (3 to 5 miles-per-hour), on level ground, for a minimum of forty-eight seconds. This will reorient the compass unit to its vehicle.

OVERHEAD CONSOLE (Continued)

The compass unit will also compensate for magnetism the vehicle may acquire during normal use. However, avoid placing anything magnetic directly on the roof of the vehicle. Magnetic mounts for an antenna, a repair order hat, or a funeral procession flag can exceed the compensating ability of the compass unit if placed on the roof panel. The use of magnetic tools on the fasteners that hold the overhead console assembly to the roof header can also affect compass operation. If the compass operation is erratic and roof magnetization is suspected (Refer to 8 - ELECTRICAL/OVERHEAD CONSOLE - STANDARD PROCEDURE - COMPASS DEMAGNETIZING).

DESCRIPTION - TEMPERATURE

All overhead consoles include temperature information. The temperature displays the outside ambient temperature in whole degrees. The temperature display can be toggled from Fahrenheit to Celsius by selecting the desired U.S./Metric option from the customer programmable features. The displayed temperature is not an instant reading of conditions, but an average temperature. It may take the temperature display several minutes to respond to a major temperature change, such as driving out of a heated garage into winter temperatures.

When the ignition switch is turned to the Off position, the last displayed temperature reading stays in the electronic control modules (CMTC, EVIC) memory. When the ignition switch is turned to the On position again, the electronic module will display the memory temperature for one minute; then update the display to the current average temperature reading within five minutes.

The temperature function is supported by an ambient temperature sensor. The sensor is mounted near the front and center of the vehicle, and is hard wired to the Powertrain Control Module (PCM). The PCM sends temperature status messages to the module over the Programmable Communication Interface (PCI) data bus circuit.

DIAGNOSIS AND TESTING

OVERHEAD CONSOLE

Any diagnosis of the overhead console should begin with the use of the DRB III® diagnostic tool. For information on the use of the DRB III®, refer to the appropriate Diagnostic Procedures information.

If the problem with the overhead console is an inaccurate or dashed (- -) display, refer to SELF-DIAGNOSTIC TEST. If the problem with the overhead console is incorrect Vacuum Fluorescent Display (VFD) dimming levels, use a DRB III® scan tool and the proper diagnostic procedures information to test for the correct dimming message inputs being received from the Body Control Module (BCM) or Front Control Module (FCM) over the Programmable Communications Interface (PCI) data bus circuit. If the problem is a no-display condition, use the following procedures.

Inspect the related wiring harness connectors for broken, bent, pushed out, or corroded terminals. Refer to the appropriate wiring information.

(1) Check the fused B(+) fuse in the integrated power module. If OK, go to Step 2. If not OK, repair the shorted circuit or component as required and replace the faulty fuse.

(2) Check for battery voltage at the fused B(+) fuse in the integrated power module. If OK, go to Step 3. If not OK, repair the open fused B(+) circuit to the fused B(+) fuse in the integrated power module as required.

(3) Check the fused ignition switch output (run/start) fuse in the integrated power module. If OK, go to Step 4. If not OK, repair the shorted circuit or component as required and replace the faulty fuse.

(4) Turn the ignition switch to the On position. Check for battery voltage at the fused ignition switch output (run/start) fuse in the integrated power module. If OK, go to Step 5. If not OK, repair the open fused ignition switch output (run/start) circuit to the ignition switch as required.

(5) Turn the ignition switch to the Off position. Disconnect and isolate the battery negative cable. Remove the overhead console. Check for continuity between the ground circuit cavity of the roof wire harness connector for the electronics module and a good ground. There should be continuity. If OK, go to Step 6. If not OK, repair the open ground circuit as required.

(6) Connect the battery negative cable. Check for battery voltage at the fused B(+) circuit cavity of the roof wire harness connector for the electronics module. If OK, go to Step 7. If not OK, repair the open fused B(+) circuit to the fused B(+) fuse in the integrated power module as required.

(7) Turn the ignition switch to the On position. Check for battery voltage at the fused ignition switch output (run/start) circuit cavity of the roof wire harness connector for the electronics module. If OK, refer to SELF-DIAGNOSTIC TEST. If not OK, repair the open fused ignition switch output (run/start) circuit to the fuse in the integrated power module as required.

OVERHEAD CONSOLE (Continued)

SELF-DIAGNOSTIC TEST

A self-diagnostic test is used to determine that the electronics module is operating properly, and that all the PCI data bus messages are being received for initial operation. Initiate the self-diagnostic test as follows:

(1) With the ignition switch in the Off position, on Electronic Vehicle Information Center (EVIC) and Compass Mini-Trip Computer (CMTC) equipped vehicles simultaneously depress and hold the **STEP** and the **RESET** buttons. On Compass Temperature Module (CT) equipped vehicles depress the **C/T** and the **US/M** push buttons.

(2) Turn the ignition switch to the On position.

(3) Following completion of these tests, the electronics module will display one of the following messages:

a. **Pass Self Test (EVIC only), PASS (CT, CMTC)** - The electronics module is working properly.

b. **Failed Self Test (EVIC only), FAIL (CT, CMTC)** - The electronics module has an internal failure. The electronics module is faulty and must be replaced.

NOTE: If the compass functions, but accuracy is suspect, it may be necessary to perform a variation adjustment. This procedure allows the compass unit to accommodate variations in the earth's magnetic field strength, based on geographic location. (Refer to 8 - ELECTRICAL/OVERHEAD CONSOLE - STANDARD PROCEDURE - COMPASS VARIATION ADJUSTMENT).

NOTE: If the compass reading display is blank and only "CAL" appears in the display, demagnetizing may be necessary to remove excessive residual magnetic fields from the vehicle. (Refer to 8 - ELECTRICAL/OVERHEAD CONSOLE - STANDARD PROCEDURE - COMPASS DEMAGNETIZING).

STANDARD PROCEDURE

COMPASS CALIBRATION

CAUTION: Do not place any external magnets, such as magnetic roof mount antennas, in the vicinity of the compass. Do not use magnetic tools when servicing the overhead console.

The electronic compass unit features a self-calibrating design, which simplifies the calibration procedure. This feature automatically updates the compass calibration while the vehicle is being driven. This allows the compass unit to compensate for small changes in the residual magnetism the vehicle may acquire during normal use. If the compass readings appear to be erratic or out of calibration, perform the following calibration procedure. Also, new service replacement Electronic Modules (EVIC, CMTC, CT) must have their compass calibrated using this procedure. Do not attempt to calibrate the compass near large metal objects such as other vehicles, large buildings, or bridges; or, near overhead or underground power lines.

NOTE: Whenever the compass is calibrated manually, the variance number must also be reset. (Refer to 8 - ELECTRICAL/OVERHEAD CONSOLE - STANDARD PROCEDURE - COMPASS VARIATION ADJUSTMENT).

Calibrate the compass manually as follows:

(1) Turn the ignition switch to the On position. If the compass/thermometer data is not currently being displayed, momentarily depress and release the C/T push button to reach the compass/thermometer display.

(2) On Electronic Vehicle Information Center (EVIC) and Compass Mini-Trip Computer (CMTC) equipped vehicles depress the Reset push button and hold the button until "CAL" appears in the display. This takes about ten seconds, and appears about five seconds after "VAR = XX" is displayed. On Compass Temperature Module (CT) equipped vehicles depress the C/T push button and US/M push button down until "CAL" appears in the display. This takes about ten seconds, and appears about five seconds after "VAR = XX" is displayed.

(3) Release the push button(s).

(4) Drive the vehicle on a level surface, away from large metal objects and power lines, through three or more complete circles at between five and eight kilometers-per-hour (three and five miles-per-hour) for a minimum of 48 seconds. The "CAL" message will disappear from the display to indicate that the compass is now calibrated.

NOTE: If the "CAL" message remains in the display, either there is excessive magnetism near the compass, or the unit is faulty. Repeat the calibration procedure one more time.

OVERHEAD CONSOLE (Continued)

NOTE: If the wrong direction is still indicated in the compass display, the area selected for calibration may be too close to a strong magnetic field. Repeat the calibration procedure in another location.

COMPASS DEMAGNETIZING

A degaussing tool (Special Tool 6029) is used to demagnetize, or degauss, the overhead console forward mounting screw and the roof panel above the overhead console. Equivalent units must be rated as continuous duty for 110/115 volts and 60 Hz. They must also have a field strength of over 350 gauss at 7 millimeters (0.25 inch) beyond the tip of the probe.

To demagnetize the roof panel and the overhead console forward mounting screw, proceed as follows:

(1) Be certain that the ignition switch is in the Off position, before you begin the demagnetizing procedure.

(2) Connect the degaussing tool (Fig. 1) to an electrical outlet, while keeping the tool at least 61 centimeters (2 feet) away from the compass unit.

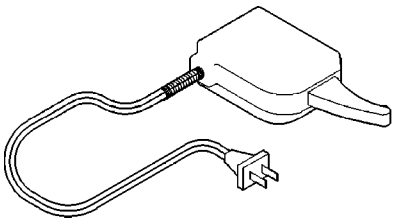

Fig. 1 DEGAUSSING TOOL 6029

(3) Slowly approach the head of the overhead console forward mounting screw with the degaussing tool connected.

(4) Contact the head of the screw with the plastic coated tip of the degaussing tool for about two seconds.

(5) With the degaussing tool still energized, slowly back it away from the screw. When the tip of the tool is at least 61 centimeters (2 feet) from the screw head, disconnect the tool.

(6) Place a piece of paper approximately 22 by 28 centimeters (8.5 by 11 inches), oriented on the vehicle lengthwise from front to rear, on the center line of the roof at the windshield header (Fig. 2). The purpose of the paper is to protect the roof panel from scratches, and to define the area to be demagnetized.

(7) Connect the degaussing tool to an electrical outlet, while keeping the tool at least 61 centimeters (2 feet) away from the compass unit.

(8) Slowly approach the center line of the roof panel at the windshield header, with the degaussing tool connected.

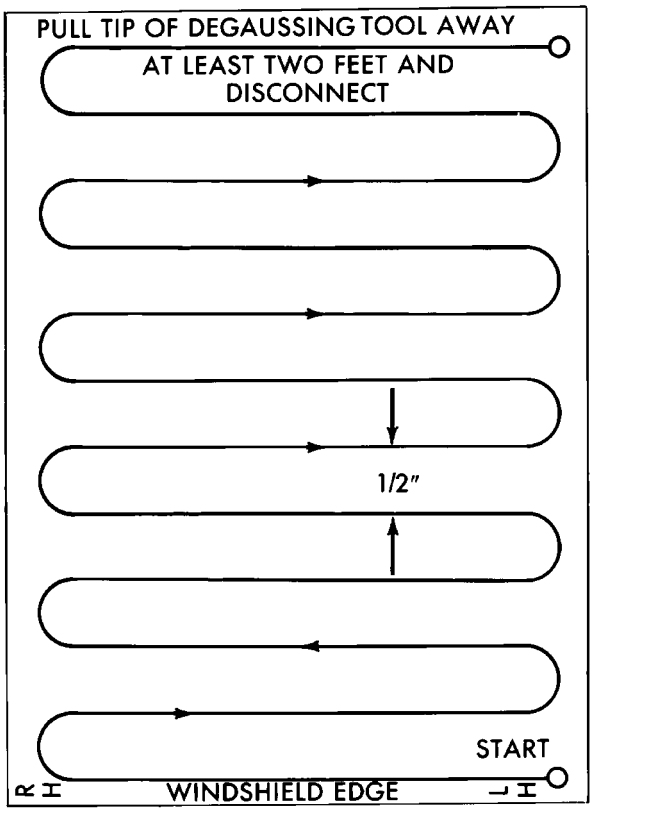

Fig. 2 ROOF DEMAGNETIZING PATTERN

(9) Contact the roof panel with the plastic coated tip of the degaussing tool. Be sure that the template is in place to avoid scratching the roof panel. Using a slow, back-and-forth sweeping motion, and allowing 13 millimeters (0.50 inch) between passes, move the tool at least 11 centimeters (4 inches) to each side of the roof center line, and 28 centimeters (11 inches) back from the windshield header.

(10) With the degaussing tool still energized, slowly back it away from the roof panel. When the tip of the tool is at least 61 centimeters (2 feet) from the roof panel, disconnect the tool.

(11) Calibrate the compass and adjust the compass variance (Refer to 8 - ELECTRICAL/OVERHEAD CONSOLE - STANDARD PROCEDURE).

COMPASS VARIATION ADJUSTMENT

Compass variance, also known as magnetic declination, is the difference in angle between magnetic north and true geographic north. In some geographic locations, the difference between magnetic and geographic north is great enough to cause the compass to give false readings. If this problem occurs, the compass variance setting may need to be changed.

To set the compass variance:

OVERHEAD CONSOLE (Continued)

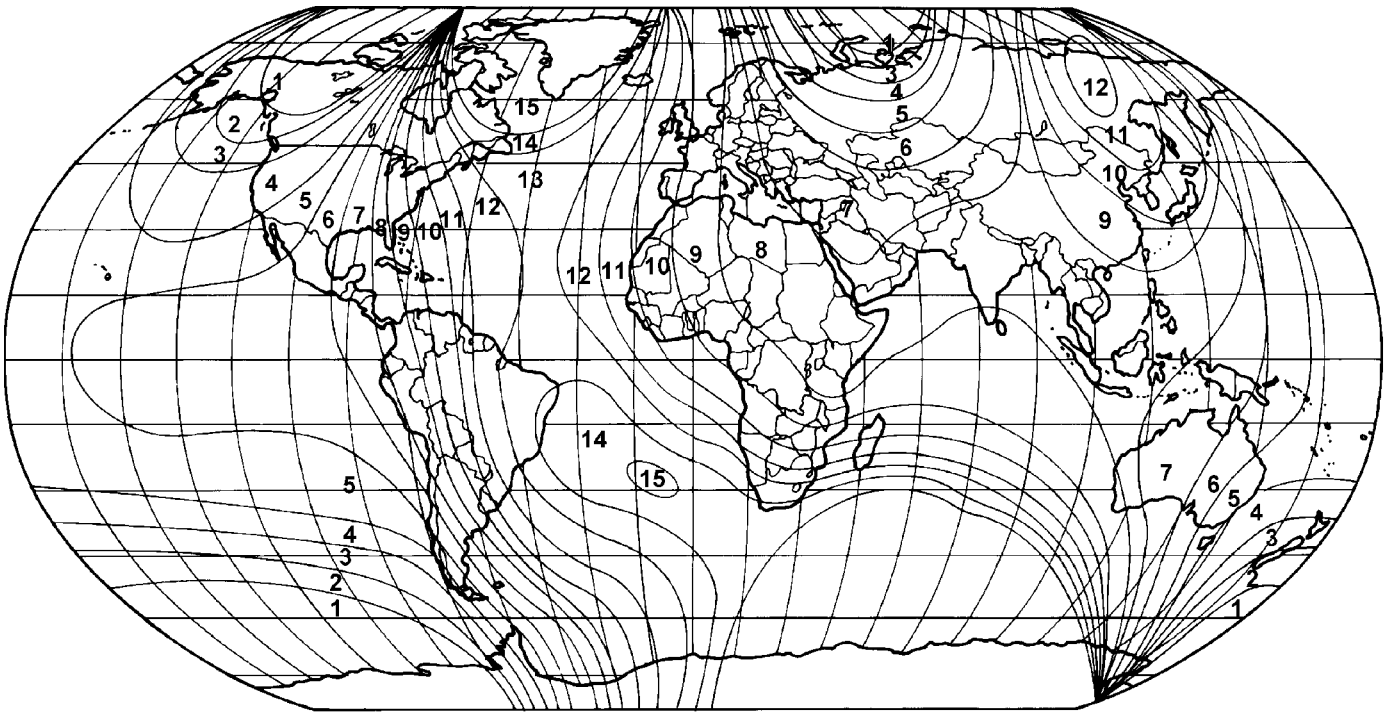

Fig. 3 Variance Settings

(1) Using the Variance Settings map, find your geographic location and note the zone number (Fig. 3).

(2) Turn the ignition switch to the On position. If the compass/thermometer data is not currently being displayed, momentarily depress and release the C/T push button to reach the compass/thermometer display.

(3) On Electronic Vehicle Information Center (EVIC) and Compass Mini-Trip Computer (CMTC) equipped vehicles depress the Reset push button and hold the button down until "VAR = XX" appears in the display. This takes about five seconds. On Compass Temperature Module (CT) equipped vehicles depress the C/T push button and US/M push button down until "VAR = XX" appears in the display. This takes about five seconds.

(4) Release the push button(s). "VAR =XX " will remain in the display. "XX" equals the current variance zone setting.

(5) On Electronic Vehicle Information Center (EVIC) and Compass Mini-Trip Computer (CMTC) equipped vehicles momentarily depress and release the **STEP** button to step through the zone numbers, until the zone number for your geographic location appears in the display. On Compass Temperature Module (CT) equipped vehicles depress the **US/M** push button to step through the zone numbers, until the zone number for your geographic location appears in the display.

(6) On Electronic Vehicle Information Center (EVIC) and Compass Mini-Trip Computer (CMTC) equipped vehicles momentarily depress and release the **RESET** push button to enter the displayed zone number into the EVIC/CMTC module memory. On Compass Temperature Module (CT) equipped vehicles depress the **C/T** push button to enter the displayed zone number into the electronic module memory.

(7) Confirm that the correct directions are now indicated by the compass.

REMOVAL

(1) Disconnect and isolate the battery negative cable.

(2) Remove the overhead console retaining screw, located in the front of console.

(3) Grasp the sides of the overhead console and pull straight down evenly to disengage the two snap clips at the rear of the unit.

(4) Lower the overhead console far enough to access the wire harness connectors.

(5) Disconnect the EVIC, CMTC or CT electronic module and the reading/courtesy lamps electrical connector.

(6) Remove the overhead console from the vehicle.

INSTALLATION

(1) Position the overhead console in the vehicle.

OVERHEAD CONSOLE (Continued)

(2) Connect the EVIC, CMTC or CT electronic module and the reading/courtesy lamps electrical connector.

(3) Using your fingertips, grasp the sides of the overhead console and push straight up evenly to engage the two snap clips at the rear of the unit.

CAUTION: DO NOT PRESS ON THE SUNGLASS STORAGE BIN DOOR. DAMAGE TO THE DOOR MAY RESULT.

(4) Install the overhead console retaining screw, located in the front of console. Torque the screw to 1.2 N·m (10 in. lbs.).

(5) Connect the remote negative battery cable.

SPECIAL TOOLS

OVERHEAD CONSOLE

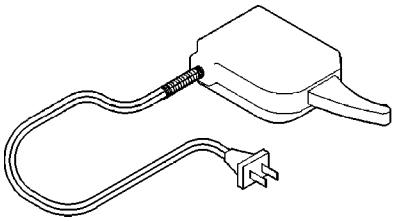

DEGAUSSING TOOL #6029

ELECTRONIC VEHICLE INFO CENTER

DESCRIPTION

The Electronic Vehicle Information Center (EVIC) is located in the overhead console. The EVIC features a large Vacuum Fluorescent Display (VFD) screen for displaying information, and back-lit push button switches labeled C/T (compass/thermometer), RESET, STEP, and MENU. The EVIC module contains a central processing unit and interfaces with other electronic modules in the vehicle over the Programmable Communications Interface (PCI) data bus circuit.

The EVIC “Menu” push button provides the vehicle operator with a user interface, which allows the selection of several optional customer programmable electronic features to suit individual preferences. (Refer to 8 - ELECTRICAL/OVERHEAD CONSOLE/ ELECTRONIC VEHICLE INFO CENTER - STANDARD PROCEDURE - ELECTRONIC VEHICLE INFORMATION CENTER PROGRAMMING).

If the vehicle is equipped with the optional universal transmitter transceiver, the EVIC will also display messages and an icon indicating when the universal transmitter transceiver is being trained, which of the three transmitter buttons is transmitting, and when the transceiver is cleared.

Data input for all EVIC functions, including VFD dimming level, is received through the PCI data bus circuit. The EVIC module uses its internal programming and all of its data inputs to calculate and display the requested data. If the data displayed is incorrect, perform the SELF - DIAGNOSTIC TEST (Refer to 8 - ELECTRICAL/OVERHEAD CONSOLE - DIAGNOSIS AND TESTING). If these tests prove inconclusive, the use of a DRBIII® scan tool and the proper diagnostic procedures information are recommended for further testing of the EVIC module and the PCI data bus circuit.

The EVIC module cannot be repaired, and is available for service only as a unit. This unit includes the plastic module and display lens. If any of these components is faulty or damaged, the complete EVIC module must be replaced.

OPERATION

The Electronic Vehicle Information Center (EVIC) uses both non-switched and ignition switched sources of battery current so that some of its features remain operational at any time, while others may only operate with the ignition switch in the On position. When the ignition switch is turned to the On position, the EVIC module Vacuum Fluorescent Display (VFD) will return to the last function being displayed before the ignition was turned to the Off position.

The compass/thermometer display is the normal EVIC display. With the ignition switch in the On position, momentarily depressing and releasing the C/T (compass/thermometer) push button switch will cause the EVIC to return to the compass/thermometer/trip computer display mode from any other mode. While in the compass/thermometer/trip computer display mode, momentarily depressing and releasing the Step push button will step through the available trip computer display options.

The EVIC trip computer features several functions that can be reset. The functions that can be reset are:

- Average fuel economy
- Trip odometer
- Elapsed time

With the ignition switch in the On position and with one of the functions of the trip computer that can be reset currently displayed, depressing the Reset push button twice within four seconds will perform a global reset, and all of the trip computer information that can be reset will be reset to zero. With the ignition switch in the On position and the function that is to be reset currently displayed, momentarily depressing and holding the Reset push button for one second will perform a local reset, and only the value of the displayed function will be reset to zero. A global or local reset will only occur if the

function currently displayed is a function that can be reset. The distance to service function can also be reset using the local reset method, but it will reset back to the Service Interval distance that is set in the EVIC programmable features mode. (Refer to 8 - ELECTRICAL/OVERHEAD CONSOLE/ELECTRONIC VEHICLE INFO CENTER - STANDARD PROCEDURE).

DIAGNOSIS AND TESTING

ELECTRONIC VEHICLE INFORMATION CENTER

Electronic Vehicle Information Center (EVIC) data is obtained from the Body Control Module (BCM) on the Programmable Communications Interface (PCI) Data Bus circuit. The EVIC will display dashes (- -) for any of the screens it did not receive the bus messages. The label corresponding to the missing information will be lit. If no EVIC data is displayed, check the PCI Data Bus circuit communications and the BCM. If the dimming level is improper check the PCI Data Bus circuit.

The use of a DRBIII® scan tool and the proper diagnostic procedures information are recommended for further testing of the EVIC module and the PCI data bus circuit. Perform the SELF-DIAGNOSTIC TEST before replacing the EVIC module (Refer to 8 - ELECTRICAL/OVERHEAD CONSOLE - DIAGNOSIS AND TESTING).

STANDARD PROCEDURE

ELECTRONIC VEHICLE INFORMATION CENTER PROGRAMMING

EVIC PROGRAMMING MODE

Some vehicles are equipped with a Electronic Vehicle Information Center (EVIC) equipped overhead console. The Electronic Vehicle Information Center (EVIC) provides the vehicle operator with a user interface, which allows the selection of several optional customer programmable electronic features to suit individual preferences. The EVIC must be placed into its programming mode in order to view or change the programmable features. To enter the EVIC programming mode and to view or change the selected programmable features options, proceed as follows:

(1) Turn the ignition switch to the On position.

(2) Depress and release the Menu push button. The first item in the programmable features menu list will appear in the EVIC display.

(3) Momentarily depress and release the Menu push button to step through the programmable features list. Each programmable feature and its currently selected option will appear on the EVIC display in the sequence shown in the Programmable Features list that follows.

(4) Momentarily depress and release the Step push button to step through the available options for the programmable feature being displayed.

(5) The option that last appears in the display with a programmable feature before exiting the programming mode, becomes the newly selected programmable feature option.

(6) The EVIC exits the programming mode and returns to its normal operating mode when the C/T push button is depressed or when the end of the programmable features menu list is reached, whichever occurs first.

PROGRAMMABLE FEATURES

NOTE: Tire pressure monitoring (TPM) system information is not covered in this section of the service manual. Refer to the tires/wheels section of this manual for detailed tire pressure monitoring system information.

- **LANGUAGE?** - The options include English, Francaise, Deutsch, Italiana, or Espanol. The default is English. All EVIC display nomenclature, including the trip computer functions, warning messages and the programmable features appear in the selected language.
- **DISPLAY U.S. OR METRIC?** - The options include U.S. and M. The default is U.S. This feature toggles the trip computer temperature, fuel economy and odometer display readings between U.S. and metric units of measure. It also changes the odometer display in the instrument cluster.
- **SERVICE INTV. =** - The options include from 3200 to 12000 kilometers in 800 kilometer increments (2000 to 7500 miles in 500 mile increments). The default is 12000 kilometers (7500 miles). The selected distance becomes the interval at which the Perform Service warning message will be displayed by the EVIC. If a new distance is selected, a second programmable feature appears, **RESET SERVICE DISTANCE?** - The options include No and Yes. The default is Yes. When Yes is selected, the accumulated distance since the last previous Perform Service warning message will be reset to zero because the service interval has been changed. When No is selected, the distance until the next Perform Service warning message is reduced by the accumulated distance since the last previous message.

ELECTRONIC VEHICLE INFO CENTER (Continued)

• **RETRAIN TIRE SENSORS?** - This programmable feature only applies to vehicles equipped with the optional Tire Pressure Monitoring System. The options include Yes and No. The default is No. When Yes is selected, and the menu button is depressed the EVIC will enter the training mode, starting with the left front tire.

• **USE FACTORY SETTINGS?** - The options include Yes and No. The default is Yes. When yes is selected all the programmable features will return to there defaults and the rest of the programmable features will not be displayed. If No is selected the rest of the programmable features will be displayed at there current chosen values. This feature will automatically return to the Yes default under two conditions. First, if no programmable features are changed from there defaults. Second, if all the programmable features equal there defaults.

• **AUTO DOOR LOCKS?** - The options include Yes and No. The default is Yes. When Yes is selected, all doors and the liftgate lock automatically when vehicle speed reaches 25 kilometers-per-hour (15 miles-per-hour). If YES is selected, a second programmable feature appears, **AUTO UNLOCK ON EXIT?** - The options again include Yes and No. The default is No. When Yes is selected, following each Auto Door Lock event all doors and the liftgate will automatically unlock when the driver door is opened, if the vehicle is stopped and the transmission gear selector is in Park or Neutral. The Auto Door Unlock event will only occur once following each Auto Door Lock event.

• **REMOTE UNLOCK** - The options include Driver Door 1st and All Doors. The default is Driver Door 1st. When Diver Door 1st is selected, only the driver door unlocks when the Unlock button of the Remote Keyless Entry (RKE) transmitter is depressed once. The Unlock button of the RKE transmitter must be depressed twice to unlock all doors. When All Doors is selected, all doors unlock when the Unlock button of the RKE transmitter is depressed once.

• **REMOTE LINKED TO MEMORY?** - This programmable feature only applies to vehicles equipped with the optional memory / heated system. The options include Yes and No. The default is No. When Yes is selected, the memory system will recall the Driver 1 or Driver 2 memory settings assigned to the RKE transmitter being used to unlock the vehicle. When No is selected, the memory system will only recall memory settings when the Driver 1 or Driver 2 push buttons of the memory switch on the driver side front door trim panel are depressed.

• **SOUND HORN ON LOCK?** - The options include Yes and No. The default is No. When Yes is selected, a short horn chirp will provide an audible confirmation when the RKE receiver recognizes a valid Lock signal from an RKE transmitter. When No is selected, no horn chirp will occur with the RKE Lock event. This feature may be selected independent of the **FLASH LIGHTS WITH LOCKS?** programmable feature.

• **FLASH LIGHTS WITH LOCKS?** - The options include Yes and No. The default is Yes. When Yes is selected, a single flash of the hazard warning lamps will provide an optical confirmation when the RKE receiver recognizes a valid Lock signal from an RKE transmitter, and two flashes of the same lamps will occur when the RKE receiver recognizes a valid Unlock signal from an RKE transmitter. When No is selected, no lamp flash will occur with the RKE Lock or Unlock event. This feature may be selected independent of the **SOUND HORN ON LOCK?** programmable feature.

• **HEADLAMP DELAY =** - The options include Off, 30 Sec, 60 Sec, and 90 Sec. The default is 90 Sec. When a time interval is selected, the headlamps will remain on for that length of time when the headlamps are turned off after the ignition is turned off, or if the Auto mode is selected on vehicles with the Auto Headlamps option. When Off is selected, the headlamp delay feature is disabled.

• **HEADLAMPS ON WITH WIPERS?** - This programmable feature only applies to vehicles equipped with the optional Auto Headlamps. The options include Yes and No. The default is No. When Yes is selected, the headlamps will turn on automatically when the windshield wipers are turned on. The headlamps will turn off when the wipers are turned off, as long as the headlamp switch is in the Auto or Off positions. When No is selected, the headlamps will only turn on if manually selected or if the Auto mode is selected and the outside ambient light levels dictate that they should be on.

• **POWER ACCESSORY DELAY?** - The options include Yes and No. The default is Yes. When No is selected, the accessory powered components will turn off automatically when the ignition key is turned off. When Yes is selected, the accessory powered components will remain on for 45 seconds when the ignition key is turned off.

REMOVAL

(1) Disconnect and isolate the battery negative cable.

(2) Remove overhead console. (Refer to 8 - ELECTRICAL/OVERHEAD CONSOLE - REMOVAL).

(3) Remove the ten screws holding the Electronic Vehicle Information Center (EVIC) module in the overhead console.

(4) Remove EVIC module from console assembly.

ELECTRONIC VEHICLE INFO CENTER (Continued)

NOTE: If the EVIC module is being replaced, the tire pressure monitoring system (if equipped) must be retrained. (Refer to 22 - TIRES/WHEELS/TIRE PRESSURE MONITORING/SENSOR - STANDARD PROCEDURE)

INSTALLATION

(1) Position the Electronic Vehicle Information Center (EVIC) module in the overhead console.

(2) Install the ten screws holding the EVIC module in the overhead console.

(3) Install the overhead console (Refer to 8 - ELECTRICAL/OVERHEAD CONSOLE - INSTALLATION).

(4) Connect the battery negative cable.

NOTE: If the EVIC module is being replaced, the tire pressure monitoring system (if equipped) must be retrained. (Refer to 22 - TIRES/WHEELS/TIRE PRESSURE MONITORING/SENSOR - STANDARD PROCEDURE).

NOTE: If a new EVIC module has been installed, the compass will have to be calibrated and the variance set. (Refer to 8 - ELECTRICAL/OVERHEAD CONSOLE - STANDARD PROCEDURE - COMPASS CALIBRATION).

COMPASS/MINI-TRIP COMPUTER

DESCRIPTION

The Compass Mini-Trip Computer (CMTC) module is located in the overhead console. The CMTC consists of a electronic control module with a vacuum fluorescent display (VFD) and function switches. The CMTC consists of a electronic module that displays compass, trip computer, and temperature features. Actuating the STEP push button will cause the CMTC to change mode of operation when the ignition is ON. Example:

- Average miles per gallon (ECO)
- Distance to empty (DTE)
- Instant miles per gallon (ECO)
- Trip odometer (ODO)
- Elapsed time (ET)
- Blank

Actuating the C/T push button will cause the CMTC to change to the Compass/Temperature display.

OPERATION

The Compass Mini-Trip Computer (CMTC) module in the overhead console has buttons used to select various functions. The CMTC selector buttons will not operate until the ignition is in the RUN position.

When the ignition switch is first turned to the RUN position the CMTC display;

- Blanks momentarily
- All segments of the VFD will light for one second
- Blanks momentarily
- Returns to the last mode setting selected before the ignition was last switched OFF.

DIAGNOSIS AND TESTING

COMPASS MINI-TRIP COMPUTER

Any diagnosis of the compass mini-trip computer should begin with the use of the DRB III® diagnostic tool. For information on the use of the DRB III®, refer to the appropriate Diagnostic Procedures information.

Compass Mini-Trip Computer (CMTC) data is obtained from the Body Control Module (BCM) on the Programmable Communications Interface (PCI) Data Bus circuit. The CMTC will display dashes (- -) for any of the screens it did not receive the bus messages. The label corresponding to the missing information will be lit. If no CMTC data is displayed, check the PCI Data Bus circuit communications and the BCM. If the dimming level is improper check the PCI Data Bus circuit.

REMOVAL

(1) Disconnect and isolate the battery negative cable.

(2) Remove overhead console(Refer to 8 - ELECTRICAL/OVERHEAD CONSOLE - REMOVAL).

(3) Remove the screws holding Compass Mini-Trip Computer (CMTC) module in the overhead console.

(4) Remove CMTC module from the console assembly.

INSTALLATION

(1) Position the compass mini-trip computer (CMTC) module in the overhead console.

(2) Install the ten screws holding the CMTC module in the overhead console.

(3) Install the overhead console (Refer to 8 - ELECTRICAL/OVERHEAD CONSOLE - INSTALLATION).

(4) Connect the battery negative cable.

COMPASS/MINI-TRIP COMPUTER (Continued)

NOTE: If a new CMTC module has been installed, the compass will have to be calibrated and the variance set. (Refer to 8 - ELECTRICAL/OVERHEAD CONSOLE - STANDARD PROCEDURE - COMPASS CALIBRATION).

UNIVERSAL TRANSMITTER

DESCRIPTION

A Universal Transmitter transceiver is available on some vehicles. The universal transmitter transceiver is integral to the Electronic Vehicle Information Center (EVIC) and the Compass Mini-Trip Computer (CMTC) modules, which are located in the overhead console. The only visible component of the universal transmitter are the three transmitter push buttons centered between the modules push buttons located just rearward of the display screen in the overhead console. The three universal transmitter push buttons are identified with one, two or three light indicators so that they can be easily identified.

Each of the three universal transmitter push buttons controls an independent radio transmitter channel. Each of these three channels can be trained to transmit a different radio frequency signal for the remote operation of garage door openers, motorized gate openers, home or office lighting, security systems or just about any other device that can be equipped with a radio receiver in the 286 to 399 MegaHertz (MHz) frequency range for remote operation. The universal transmitter is capable of operating systems using either rolling code or non-rolling code technology.

The electronics module displays messages and a small house-shaped icon with one, two or three dots corresponding to the three transmitter buttons to indicate the status of the universal transmitter. The EVIC messages are:

- **Cleared Channels** - Indicates that all of the transmitter codes stored in the universal transmitter have been successfully cleared.
- **Training** - Indicates that the universal transmitter is in its transmitter learning mode.
- **Trained** - Indicates that the universal transmitter has successfully acquired a new transmitter code.
- **Transmit** - Indicates that a trained universal transmitter button has been depressed and that the universal transmitter is transmitting.

The universal transmitter cannot be repaired, and is available for service only as a unit with the EVIC or CMTC modules. If any of these components is faulty or damaged, the complete EVIC or CMTC module must be replaced.

DIAGNOSIS AND TESTING

UNIVERSAL TRANSMITTER

If both the Universal Transmitter and the Electronic Vehicle Information Center (EVIC) are inoperative, (Refer to 8 - ELECTRICAL/OVERHEAD CONSOLE/ELECTRONIC VEHICLE INFO CENTER - DIAGNOSIS AND TESTING). If the Universal Transmitter is inoperative, but the EVIC is operating normally, retrain the Transmitter with a known good transmitter (Refer to 8 - ELECTRICAL/OVERHEAD CONSOLE/UNIVERSAL TRANSMITTER - STANDARD PROCEDURE - SETTING TRANSMITTER CODES). If the unit is still inoperative, test the universal transmitter with the Radio Frequency Detector special tool as described below (Fig. 4):

(1) Turn the Radio Frequency (RF) Detector ON. A “chirp” will sound and the green power LED will light. If the green LED does not light, replace the battery.

(2) Hold the RF detector within one inch of the TRAINED universal transmitter and press any of the transmitters buttons.

(3) The red signal detection LEDs will light and the tool will beep if a radio signal is detected. Repeat this test three times.

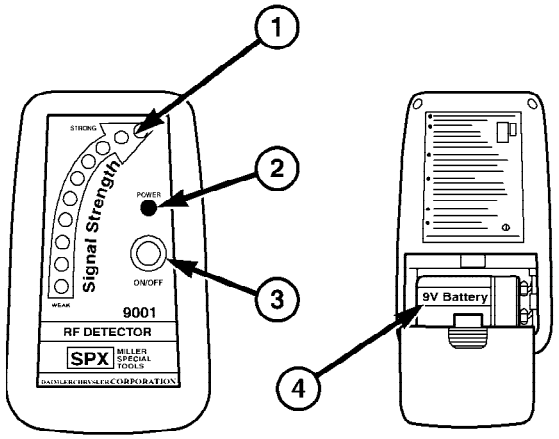

80f230cb

Fig. 4 RADIO FREQUENCY DETECTOR

1 - SIGNAL DETECTION LED'S
2 - POWER LED
3 - ON/OFF SWITCH
4 - 9V BATTERY

UNIVERSAL TRANSMITTER (Continued)

STANDARD PROCEDURE

SETTING TRANSMITTER CODES

(1) Turn off the engine.

(2) Erase the codes by pressing the two outside buttons. Release the buttons when the display confirms the operation (about 20 seconds).

(3) Choose one of the three buttons to train. Place the hand-held transmitter within one inch of the universal transmitter and push the buttons on both transmitters.

(4) Release both buttons. Your universal transmitter is now “trained”. To train the other buttons, repeat Step 3 and Step 4. Be sure to keep your hand-held transmitter in case you need to retrain the universal transmitter.

ERASING TRANSMITTER CODES

To erase the universal transmitter codes, simply hold down the two outside buttons until the display confirms the operation.

NOTE: Individual channels cannot be erased. Erasing the transmitter codes will erase ALL programmed codes.

REMOVAL

(1) For the universal transmitter removal procedure, (Refer to 8 - ELECTRICAL/OVERHEAD CONSOLE/COMPASS/MINI-TRIP COMPUTER - REMOVAL.

AMBIENT TEMP SENSOR

DESCRIPTION

Ambient air temperature is monitored by the overhead console through ambient temperature messages received from the Powertrain Control Module (PCM) over the Programmable Communications Interface (PCI) data bus circuit. The PCM receives a hard wired input from the ambient temperature sensor. The ambient temperature sensor is a variable resistor mounted to a bracket that is secured with a screw to the right side of the headlamp mounting module grille opening, behind the radiator grille and in front of the engine compartment.

For additional information on the PCM, (Refer to 8 - ELECTRICAL/ELECTRONIC CONTROL MODULES/POWERTRAIN CONTROL MODULE - DESCRIPTION).

OPERATION

The ambient temperature sensor is a variable resistor that operates on a five-volt reference signal sent by the Powertrain Control Module (PCM). The resistance in the sensor changes as temperature changes, changing the temperature sensor signal circuit voltage to the PCM. Based upon the resistance in the sensor, the PCM senses a specific voltage on the temperature sensor signal circuit, which it is programmed to correspond to a specific temperature. The PCM then sends the proper ambient temperature messages to the Electronic Vehicle Information Center (EVIC)/Compass Mini-Trip Computer (CMTC) over the Programmable Communication Interface (PCI) data bus.

The thermometer function is supported by the ambient temperature sensor, a wiring circuit, the PCM, the PCI data bus, and the Electronics module. If any portion of the ambient temperature sensor circuit fails, the PCM will self-diagnose the circuit.

The ambient temperature sensor circuit can also be diagnosed manually (Refer to 8 - ELECTRICAL/OVERHEAD CONSOLE/AMBIENT TEMP SENSOR - DIAGNOSIS AND TESTING - AMBIENT TEMPERATURE SENSOR CIRCUIT). If the temperature sensor and circuit are confirmed to be OK, but the temperature display is inoperative or incorrect, (Refer to 8 - ELECTRICAL/OVERHEAD CONSOLE - DIAGNOSIS AND TESTING) to determine the cause. For complete circuit diagrams, refer to the appropriate wiring information.

DIAGNOSIS AND TESTING

AMBIENT TEMPERATURE SENSOR

(1) Turn the ignition switch to the Off position. Disconnect and isolate the battery negative cable. Disconnect the ambient temperature sensor wire harness connector.

(2) Measure the resistance of the ambient temperature sensor. At room temperature (approx. 68°F), the sensor resistance should be between 10-13 Kilohms. The sensor resistance should be between these two values at 68°F. If the resistance is out of range replace the ambient temperature sensor.

AMBIENT TEMPERATURE SENSOR CIRCUIT

(1) Turn the ignition switch to the Off position. Disconnect and isolate the battery negative cable. Disconnect the ambient temperature sensor wire harness connector and the Powertrain Control Module (PCM) wire harness connector.

AMBIENT TEMP SENSOR (Continued)

(2) Connect a jumper wire between the two terminals in the body half of the ambient temperature sensor wire harness connector.

(3) Check for continuity between the sensor return circuit and the ambient temperature sensor signal circuit cavities of the PCM wire harness connector. There should be continuity. If OK, go to Step 4. If not OK, repair the open sensor return circuit or ambient temperature sensor signal circuit to the ambient temperature sensor as required.

(4) Remove the jumper wire from the body half of the ambient temperature sensor wire harness connector. Check for continuity between the sensor return circuit cavity of the PCM wire harness connector and a good ground. There should be no continuity. If OK, go to Step 5. If not OK, repair the shorted sensor return circuit as required.

(5) Check for continuity between the ambient temperature sensor signal circuit cavity of the PCM wire harness connector and a good ground. There should be no continuity. If OK, (Refer to 8 - ELECTRICAL/ OVERHEAD CONSOLE - DIAGNOSIS AND TESTING) to determine the cause. If not OK, repair the shorted ambient temperature sensor signal circuit as required.

REMOVAL

(1) Disconnect and isolate the battery negative cable.

(2) From behind the front bumper fascia, remove the screw holding the sensor to the radiator closure panel.

(3) Disconnect the sensor electrical connector.

(4) Remove the sensor from vehicle.

INSTALLATION

(1) Position the sensor in the vehicle and connect the sensor electrical connector.

(2) From behind the front bumper fascia, install the sensor mounting screw.

(3) Connect the battery negative cable.

POWER SYSTEMS

TABLE OF CONTENTS

page

POWER LIFTGATE SYSTEM 1
POWER LOCKS 20
POWER MIRRORS 26
POWER SEAT SYSTEM 31
POWER SLIDING DOOR SYSTEM 40
POWER WINDOWS 61

POWER LIFTGATE SYSTEM

TABLE OF CONTENTS

page

POWER LIFTGATE SYSTEM
DESCRIPTION 2
OPERATION 2
DIAGNOSIS AND TESTING
POWER LIFTGATE SYSTEM 3
STANDARD PROCEDURE
LIFTGATE ADJUSTMENT 8
POWER LIFTGATE LEARN CYCLE 8
CHIME/THERMISTOR
DESCRIPTION 8
OPERATION 8
REMOVAL 8
INSTALLATION 9
ENGAGE ACTUATOR
DESCRIPTION 9
OPERATION 9
REMOVAL 9
INSTALLATION 10
EXTERIOR HANDLE SWITCH
DESCRIPTION 10
OPERATION 10
REMOVAL 10
INSTALLATION 10
FULL OPEN SWITCH
DESCRIPTION 11
OPERATION 11
REMOVAL 11
INSTALLATION 11
LATCH
DESCRIPTION 12

page

OPERATION 12
REMOVAL 12
INSTALLATION 13
LATCH ACTUATOR
DESCRIPTION 13
OPERATION 13
REMOVAL 13
INSTALLATION 14
LIFTGATE MOTOR
DESCRIPTION 15
OPERATION 15
REMOVAL 15
INSTALLATION 16
LIFT GEAR & LINK ROD
DESCRIPTION 16
OPERATION 16
REMOVAL 16
INSTALLATION 17
PINCH SENSOR
DESCRIPTION 17
OPERATION 17
REMOVAL 18
INSTALLATION 18
TRANSVERSE BRACKET
DESCRIPTION 19
OPERATION 19
REMOVAL 19
INSTALLATION 19

POWER LIFTGATE SYSTEM

DESCRIPTION

the components of the power liftgate system are:

- Liftgate gear motor assembly
- Latch assembly
- Lift gear and rod
- Power liftgate control module
- Chime/thermistor
- Full open switch
- Engage actuator
- Pinch sensor
- Liftgate handle switch
- Overhead console switch
- Key fob switches (Fig. 1)
- Pawl switch
- Ratchet switch

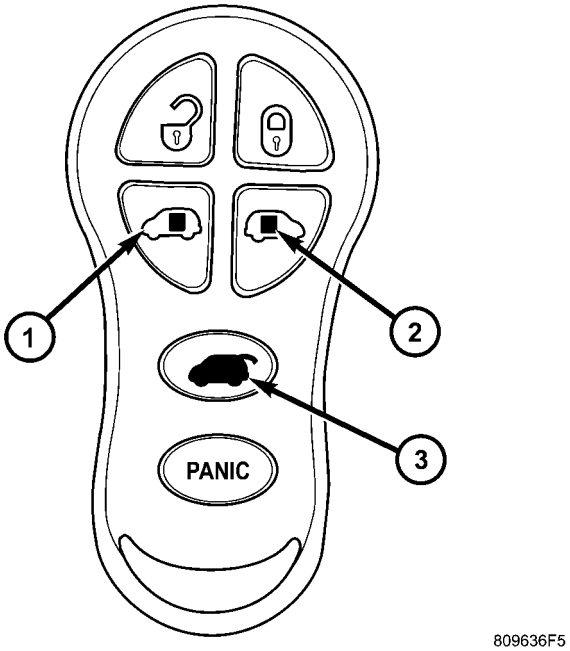

Fig. 1 KEY FOB

1 - LEFT SLIDING DOOR SWITCH
2 - RIGHT SLIDING DOOR SWITCH
3 - LIFTGATE SWITCH

The power liftgate system has its own power liftgate control module, located on the vehicles left body D-pillar behind the trim panel. The power liftgate gear motor assembly is located just above the control module. The latch assembly is located in the bottom center of the power liftgate, below the exterior liftgate handle switch. The power liftgate full open switch, engage actuator, lift gear and rod are part of the liftgate gear motor assembly. The pawl and ratchet switches are part of the latch assembly. The pinch sensors are located along the right and left sides of the power liftgate, just above the body line. The liftgate handle switch is a power release switch and is located in the rear light bar assembly, just above the license plate. The overhead console switch is a power open and close command switch located in the vehicles overhead console.

Software technology has enabled the power liftgate control module to detect resistance to liftgate travel, which allows the power liftgate to stop and reverse direction anytime an obstruction is felt or any of the command switches are operated (only in closing direction). Battery voltage is supplied to the power liftgate system through a 40 amp fuse, located in the Integrated Power Module (IPM) assembly. If the power liftgate system develops a fault, the power liftgate can still be operated manually with a key, similar to a manual liftgate.

The power liftgate control module communicates on the Programmable Communication Interface (PCI) Bus Circuit. Therefore, the power liftgate control module can generate and store its own Diagnostic Trouble Codes (DTC). The vehicles Body Control Module (BCM) receives and supplies messages to the power liftgate control module via the PCI bus circuit. A diagnostic scan tool, such as the DRB III® or equivalent, is used to read and troubleshoot these DTCs. Refer to the Body Diagnostic Manual for a complete list of diagnostic routines.

For additional information, (Refer to 8 - ELECTRICAL/POWER DOORS - OPERATION). Refer to the appropriate wiring information for complete circuit schematic or connector pin-out information.

WARNING: BE CERTAIN TO READ ALL WARNINGS AND CAUTIONS BEFORE ATTEMPTING ANY SERVICE OF THE POWER LIFTGATE SYSTEM OR COMPONENTS.

OPERATION

With the push of a power liftgate open/close command switch (key fob or overhead console mounted) a signal is sent out on the Programmable Communication Interface (PCI) Data Bus circuit. This signal is detected at the Body Control Module (BCM). The BCM then sends a signal out on the PCI Data Bus circuit to the power liftgate control module. The power liftgate control module then signals the power liftgate motor to start an open or close cycle, depending on what position the liftgate is in.

During a liftgate open or close cycle, if the power liftgate module detects sufficient resistance to liftgate travel, such as an obstruction in the path of the liftgate, the power liftgate control module will immediately stop the liftgate movement and reverse travel to the full open or closed position. The ability for the power liftgate module to detect resistance to liftgate

travel is accomplished by hall effect sensors, drive motor speed and pinch sensors (tape switches).

Anytime the liftgate is opened or closed using the power liftgate system the power liftgate control module learns from the cycle. If a replacement power liftgate component is installed or a liftgate adjustment is made, the module will relearn the effort and/or time required to open or close the liftgate. This learn cycle can be performed with a DRB III®, or equivalent scan tool, or with a complete cycle of the liftgate, using any one of the command switches. (Refer to 8 - ELECTRICAL/POWER DOORS - STANDARD PROCEDURE) for detailed instructions.

The power liftgate system is designed with a number of system inhibitors. These inhibitors are necessary for safety and / or feasibility of the power liftgate system. The power liftgate system inhibitors are:

- The Power Liftgate may not operate in extreme temperatures. These extreme temperatures will be approximately less than -12° F (-24.4° C) or greater than 143° F (61.6° C). A chime/thermister assembly in the rear light bar assembly monitors the outside temperature.
- The vehicle transmission must be in Park or Neutral for the power liftgate to start a cycle.
- If multiple obstacles are detected during the same power open or close cycle, the liftgate goes into manual operation.
- If severe problems occur, Diagnostic Trouble Codes (DTC) are stored in the power liftgate control module.

POWER LIFTGATE SYSTEM CAUTIONS AND WARNINGS

WARNING: ALWAYS DISCONNECT THE BATTERY NEGATIVE CABLE BEFORE ATTEMPTING ANY POWER LIFTGATE SYSTEM SERVICE.

WARNING: THERE IS A SMALL AREA ON BOTH SIDES OF THE LOWER POWER LIFTGATE WHICH IS NOT PROTECTED BY PINCH SENSORS. EXTREME CARE MUST BE TAKEN TO PREVENT OBJECTS FROM ENTERING THIS AREA ONCE THE LIFTGATE REACHES THE SECONDARY LATCH CONTACT (APPROXIMATELY 1/2 INCH BEFORE FULLY CLOSED).

WARNING: NEVER ATTEMPT TO ENTER OR EXIT THE VEHICLE WITH THE LIFTGATE IN MOTION. YOU COULD DAMAGE THE POWER LIFTGATE SYSTEM AND/OR COMPONENTS AND/OR CAUSE PERSONAL INJURY.

WARNING: NEVER STICK OBJECTS IN THE POWER LIFTGATE WHEN CINCHING CLOSED. YOU COULD DAMAGE THE VEHICLE, POWER LIFTGATE SYSTEM COMPONENTS AND/OR CAUSE PERSONAL INJURY.

DIAGNOSIS AND TESTING

POWER LIFTGATE SYSTEM

The power liftgate system contains many components and modules. In order to obtain conclusive testing the Programmable Communications Interface (PCI) data bus network and all of the electronic modules that provide inputs to, or receive outputs from the power liftgate system must be checked.

The power liftgate system can be diagnosed with an appropriate scan tool, such as the DRB III® or equivalent. The DRB III® can be used to observe various switch statuses throughout the power liftgate system to help diagnose an inoperative switch or component. The DRB III® can also be used to actuate various components throughout the power liftgate system to help diagnose an inoperative component.

Before any testing of the power liftgate system is attempted, the battery should be fully charged, all built-in power liftgate system inhibitors read and understood, and all wire harness and ground connections inspected around the affected areas on the vehicle.

The following are quick reference diagnostic tables to help when diagnosing and testing the power liftgate system.

POWER LIFTGATE SYSTEM (Continued)

LIFTGATE SYSTEM DIAGNOSIS

CONDITION	POSSIBLE CAUSES	CORRECTION
Liftgate opens unexpectedly	Inoperative Power Liftgate Module or Body Control Module (BCM)	Disconnect then reconnect the battery negative cable to reset module. Cycle the power liftgate, if the power liftgate is still not operating properly check for loose wire connections, refer to the appropriate diagnostic information
	Inoperative latch assembly	Check for blown fuse and loose wiring connections
		Check for Diagnostic Trouble Codes (DTCs), replace latch as necessary
	Inoperative open/close command switch	Check for shorted or inoperative switch. Replace switch as necessary
Liftgate will not open from outside of vehicle manually	Inoperative key cylinder assembly	Check for inoperative key cylinder assembly. Replace key cylinder as necessary
		Check link rod connections at the latch and key cylinder assembly
		Check for binds or kinks in link rod Check for foreign matter preventing the operation of key cylinder assembly Replace the components as necessary
	Inoperative latch assembly	Check for blown fuse and loose wiring connections
		Check for foreign matter preventing the operation of latch assembly Replace latch assembly as necessary
	Binding or sticking of components	Check for foreign matter preventing the operation of door
		Establish location of binding
		Replace the components as necessary
Liftgate will not open/close under power	Inoperative Power Liftgate Module or BCM	Disconnect then reconnect the battery negative cable to reset module. Cycle the power liftgate, if the power liftgate is still not operating properly check for loose wire connections, refer to the appropriate diagnostic information
	Inoperative latch assembly	Check for blown fuse and loose wiring connections
		Check for foreign matter preventing the operation of latch assembly Refer to the appropriate diagnostic information. Replace latch assembly as necessary

POWER LIFTGATE SYSTEM (Continued)

CONDITION	POSSIBLE CAUSES	CORRECTION
	Inoperative motor assembly	Refer to the appropriate diagnostic information.
	Inoperative full open switch	Refer to the appropriate diagnostic information.
	Binding or sticking of components	Establish location of binding and replace components as necessary
Power loss during Liftgate operation	Low battery voltage	Charge battery
	Inoperative Power Liftgate Module or BCM	Disconnect then reconnect the battery negative cable to reset module. Cycle the power liftgate, if the power liftgate is still not operating properly check for loose wire connections, refer to the appropriate diagnostic information
	Inoperative motor assembly	Check for no drive condition
No power latching in primary and/or secondary positions	Inoperative latch assembly	Check for blown fuse and loose wiring connections
		Check for foreign matter preventing the operation of latch assembly Refer to the appropriate diagnostic information. Replace latch assembly as necessary
	Binding or sticking of components	Establish location of binding and replace components as necessary
	Inoperative Power Liftgate or BCM	Disconnect then reconnect the battery negative cable to reset module. Cycle the power liftgate, if the power liftgate is still not operating properly check for loose wire connections, refer to the appropriate diagnostic information
	Door seal force too high	Inspect seals for damage, mis-assembly, foreign matter or other possible obstruction
	Inoperative motor assembly	Check for no drive condition
Latch will not fully release from primary position	Inoperative latch assembly	Check for blown fuse and loose wiring connections
		Check for foreign matter or damaged components preventing the operation of latch assembly Refer to the appropriate diagnostic information. Replace latch assembly as necessary
	Inoperative outside handle switch	Refer to the appropriate diagnostic information. Replace switch as necessary

POWER LIFTGATE SYSTEM (Continued)

CONDITION	POSSIBLE CAUSES	CORRECTION
	Inoperative Power Liftgate Module or BCM	Disconnect then reconnect the battery negative cable to reset module. Cycle the power liftgate, if the power liftgate is still not operating properly check for loose wire connections, refer to the appropriate diagnostic information
	Binding or sticking of components	Establish location of binding and replace components as necessary
Key fob, Outside Handle or overhead console switches do not power operate liftgate	Blown Fuse	Check fuse and replace
	Battery voltage low	Charge or replace battery in key fob or vehicle
	Inoperative latch assembly	Check for foreign matter preventing the operation of latch assembly
		Check wire connection Pawl and/or ratchet switch inoperative. Replace latch as necessary
	Inoperative BCM	Check electrical connections
		Refer to the appropriate diagnostic information for additional checks Replace BCM as necessary
	Inoperative key fob	Verify inoperative key fob by trying other key fob functions
		Replace key fob battery Reprogram key fob Replace key fob as necessary
	Inoperative Power Liftgate Module	Disconnect then reconnect the battery negative cable to reset module. Cycle the power liftgate, if the power liftgate is still not operating properly check for loose wire connections, refer to the appropriate diagnostic information
	Inoperative liftgate motor assembly	Check for foreign matter preventing the operation of gear motor assembly
		Check wire connections Motor clutch does not engage. Replace liftgate motor assembly Full open switch inoperative, replace switch as necessary
Liftgate does not stay open	Inoperative liftgate prop rods	Check for broken attachments. Replace prop rods as necessary
High inside/outside opening effort	Inoperative liftgate prop rods	Check for broken attachments. Replace prop rods as necessary

POWER LIFTGATE SYSTEM (Continued)

CONDITION	POSSIBLE CAUSES	CORRECTION
	Gear motor did not disengage	Refer to the appropriate diagnostic information. Replace components as necessary
	Binding or sticking of components	Establish location of binding and replace components as necessary
Liftgate continues to cinch closed during power mode	Inoperative latch assembly	Check for blown fuse and loose wiring connections
		Check for foreign matter preventing the operation of latch assembly Refer to the appropriate diagnostic information. Replace components as necessary
	Inoperative Power Liftgate Module or BCM	Disconnect then reconnect battery to reset module, function liftgate, if no function exists check for loose wire connections, see Body Diagnostic Manual for detailed procedures
Liftgate continues to open during power mode (runaway motor)	Inoperative Power Liftgate Module or BCM	Disconnect then reconnect the battery negative cable to reset module. Cycle the power liftgate, if the power liftgate is still not operating properly check for loose wire connections, refer to the appropriate diagnostic information
	Inoperative full open switch	Check wire connections
		Replace switch, if necessary
	Inoperative motor assembly	Check for continuous drive condition
Liftgate opens very slowly	Inoperative liftgate motor assembly	Check wire connections
		Replace motor assembly as necessary
	Inoperative liftgate prop rods	Replace prop rods as necessary
	Binding or sticking of components	Establish location of binding and replace components as necessary
	Grade of vehicle too steep for power operation	Operate liftgate manually
Squeaks, Noises and rattles	Foreign material in door compartment	Remove foreign material
	Loose components	Check and tighten loose components as necessary

STANDARD PROCEDURE

LIFTGATE ADJUSTMENT

In order for the power liftgate system to function properly the liftgate must move freely and smoothly. The power liftgate system can accommodate for some minor changes in the effort required to move the liftgate. However, in extreme conditions the liftgate may need to be mechanically adjusted for proper fit and finish. (Refer to 23 - BODY/DECKLID/HATCH/LIFTGATE/TAILGATE/LIFTGATE - INSTALLATION) for detailed instructions.

If a problem exists with the power liftgate and it is suspected to be extreme effort, check the liftgate prop rods and hinges for free movement.

NOTE: Routine application of Mopar MP-50® or equivalent on the chrome prop rod shafts and liftgate latch and hinges will help keep the liftgate in good working order.

POWER LIFTGATE LEARN CYCLE

Any time a power liftgate component is removed, replaced or a liftgate adjustment is performed a learn cycle must be performed. This learn cycle enables the power liftgate control module to learn or relearn information (travel limits, resistance to door travel, etc.) which allows it to perform properly and safely. Perform the following to complete a power liftgate learn cycle:

(1) Obtain a DRBIII®, or equivalent scan tool.

(2) Connect the scan tool to the vehicle and check for any power liftgate system stored Diagnostic Trouble Codes (DTCs), correct and erase any stored DTCs.

(3) Using the scan tool, Go into Test Routine Menu and select the power open command.

(4) Select the power close command.

(5) The liftgate learn cycle is complete.

If a DRBIII® or equivalent scan tool is not available, the learn cycle can be performed by actuating the liftgate using any of the normal command switches. Be certain to cycle the liftgate through a complete open and close cycle before returning the vehicle to service.

NOTE: If the power liftgate will not complete a full cycle a problem exists with the power liftgate system. (Refer to 8 - ELECTRICAL/POWER DOORS - DIAGNOSIS AND TESTING).

CHIME/THERMISTOR

DESCRIPTION

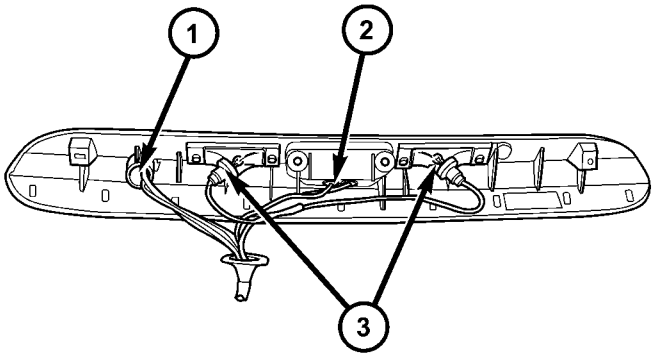

80a2b08f

Fig. 2 REAR LIGHT BAR

1 - CHIME / THERMISTOR
2 - ELECTRIC RELEASE HANDLE SWITCH
3 - LICENSE PLATE LAMPS

The chime/thermistor assembly is a small capacitor shaped electrical component mounted to the rear license plate lamp housing assembly (Fig. 2) , located just above the license plate. The chime portion of the assembly controls the audible chime sound heard at the rear of the vehicle when the power liftgate is in motion. The thermistor portion of the assembly is a temperature sensor, used by the power liftgate control module. The chime/thermistor assembly is a serviceable component.

OPERATION

The chime/thermistor assembly performs two different functions for the power liftgate system. First, the chime portion provides an audible chime sound which is controlled by the power liftgate control module. The chime/thermistor assembly is hardwired to the power liftgate control module. Second the thermistor provides a outside temperature reading by way of a resistance reading supplied to the power liftgate control module. As temperature increases the resistance reading increases, as temperature decreases the resistance reading decreases.

REMOVAL

(1) Disconnect and isolate the battery negative cable.

CHIME/THERMISTOR (Continued)

(2) Remove the rear light bar assembly from the vehicle. (Refer to 8 - ELECTRICAL/POWER DOORS/ SWITCH - REMOVAL) for the procedure.

(3) Grasp the light bar at its sides next to thermistor/chime assembly and gently pull the two sides of the light bar apart until the thermistor/chime assembly can be removed.

INSTALLATION

(1) Gently pull the two sides of the light bar apart until the thermistor/chime assembly can be installed.

(2) Install the rear light bar assembly on the vehicle. (Refer to 8 - ELECTRICAL/POWER DOORS/ SWITCH - INSTALLATION) for the procedure.

(3) Connect the battery negative cable.

ENGAGE ACTUATOR

DESCRIPTION

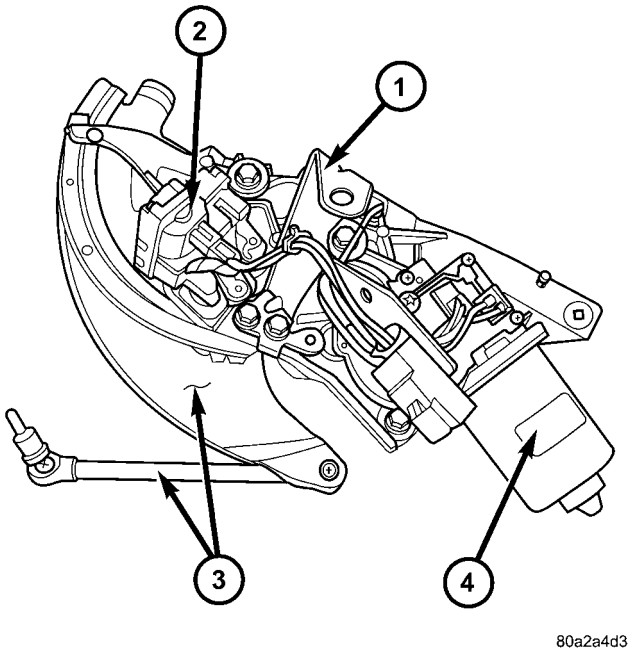

Fig. 3 LIFTGATE GEAR MOTOR ASSEMBLY

1 - TRANSVERSE BRACKET
2 - ENGAGE ACTUATOR
3 - LIFT GEAR AND ROD ASSEMBLY
4 - LIFTGATE MOTOR

The 12 volt engage actuator (Fig. 3) provides the engagement and disengagement of the liftgate gear motor to the lift gear by way of an over center link, activated by a lever.

The engage actuator is a serviceable component and cannot be repaired, if found to be inoperative it must be replaced.

OPERATION

The engage actuators normal position is disengaged. When a power liftgate open or close command is generated from any of the command switches, the power liftgate control module signals the engage actuator to move its lever to the engaged position. This engages the gear motor to the lift gear, so when the motor turns the lift gate moves upward or downwards depending on its current position.

During a manual liftgate open or close cycle the engage actuator is disengaged, allowing unrestricted liftgate movement.

REMOVAL

(1) Disconnect and isolate the battery negative cable.

(2) Remove the left rear D-pillar trim from the vehicle, (Refer to 23 - BODY/INTERIOR/LEFT D-PILLAR TRIM PANEL - REMOVAL).

(3) Manually engage the actuator link rod, this must be done to access one of the engage actuator retaining screws.

(4) Remove the two engage actuator retaining screws (Fig. 4).

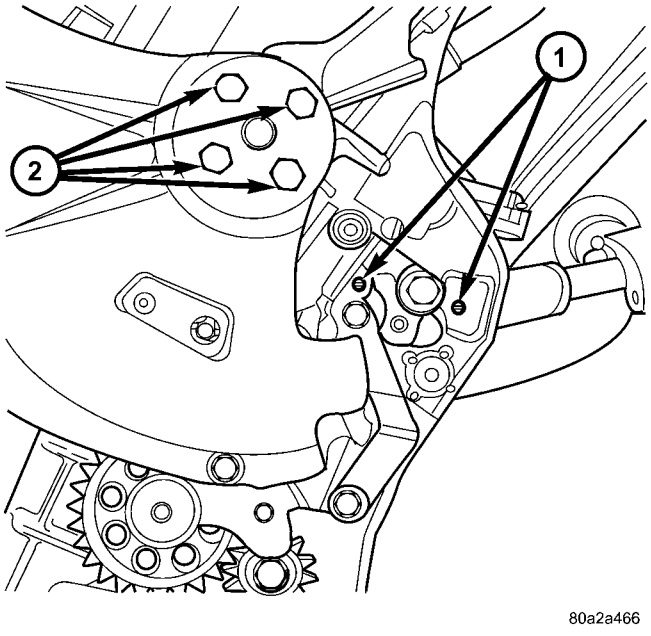

Fig. 4 LIFTGATE GEAR MOTOR ASSEMBLY

1 - ENGAGE ACTUATOR RETAINING SCREWS
2 - LIFT GEAR RETAINING BOLTS

(5) Disconnect the engage actuator electrical connector and remove the engage actuator from the vehicle.

ENGAGE ACTUATOR (Continued)

INSTALLATION

(1) Position the engage actuator in the vehicle and connect the engage actuator electrical connector.

(2) Install the two engage actuator retaining screws.

(3) Manually disengage the actuator.

(4) Install the left rear D-pillar trim on the vehicle, (Refer to 23 - BODY/INTERIOR/LEFT D-PILLAR TRIM PANEL - INSTALLATION).

(5) Connect the battery negative cable.

(6) Using an appropriate scan tool, check and erase any power liftgate control module diagnostic trouble codes.

(7) Verify power liftgate system and engage actuator operation. Cycle the power liftgate through one complete open and close cycle.

EXTERIOR HANDLE SWITCH

DESCRIPTION

The exterior handle switch is an electronic release switch mounted to the rear license plate lamp housing assembly, located just above the license plate. This switch controls the power liftgate release function and is also capable of reversing the power liftgate when it is in motion. A full power open cycle cannot be performed using this switch, only one of the power open command switches (key fob and overhead console mounted) can be used to perform a full power open cycle. The exterior handle switch is a serviceable component.

OPERATION

When the exterior handle switch is depressed, with the liftgate in the closed position, a message is sent to the Body Control Module (BCM). The BCM then sends a signal to the power liftgate control module via the Programmable Communication Interface (PCI) data bus circuit. The power liftgate control module then sends a signal to the power latch mounted actuator, which moves the liftgate from the primary closed and latched position to the open and movable position. If the liftgate is not pulled open once the latch releases within a few seconds, the latch will cinch closed again.

REMOVAL

(1) Disconnect and isolate the battery negative cable.

(2) Open the liftgate and remove the liftgate trim panel, (Refer to 23 - BODY/DECKLID/HATCH/LIFTGATE/TAILGATE/TRIM PANEL - REMOVAL).

(3) Remove the rear lamp bar assembly from the vehicle.

(4) Locate the two wires going to the exterior handle switch. Cut the tie strap and trace the wires to the large electrical connector and back the wires out of the large connector and through the grommet. **Take care to mark the location of the wire terminals in relation to the large connector so that they are positioned in the appropriate cavities upon switch installation.**

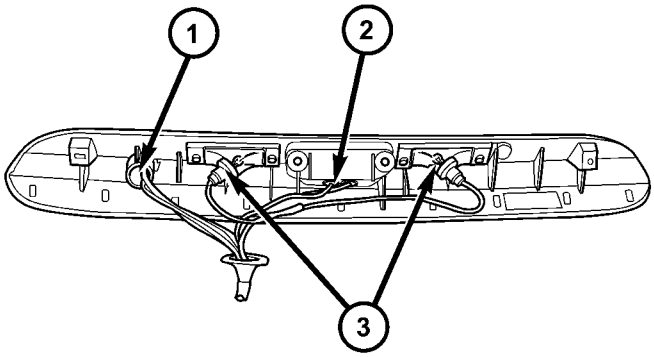

Fig. 5 REAR LIGHT BAR

1 - CHIME / THERMISTOR
2 - ELECTRIC RELEASE HANDLE SWITCH
3 - LICENSE PLATE LAMPS

(5) Depress the two exterior handle switch retaining tabs and roll the switch out of the light bar assembly (Fig. 5).

INSTALLATION

(1) Install the handle switch in the light bar assembly (Fig. 6).

(2) Locate the two wires going to the exterior handle switch. Install the wires through the grommet and in the large connector. Secure with a tie strap.

NOTE: Be certain wires are reinstalled in the correct wire cavities. Failure to do so could result in damage to the handle switch. Refer to the appropriate wiring information for complete circuit schematic or connector pin-out information.

(3) Install the rear light bar.

(4) Install the liftgate trim panel, (Refer to 23 - BODY/DECKLID/HATCH/LIFTGATE/TAILGATE/TRIM PANEL - INSTALLATION).

(5) Connect the battery negative cable.

(6) Using an appropriate scan tool, check any erase any power liftgate control module diagnostic trouble codes.

EXTERIOR HANDLE SWITCH (Continued)

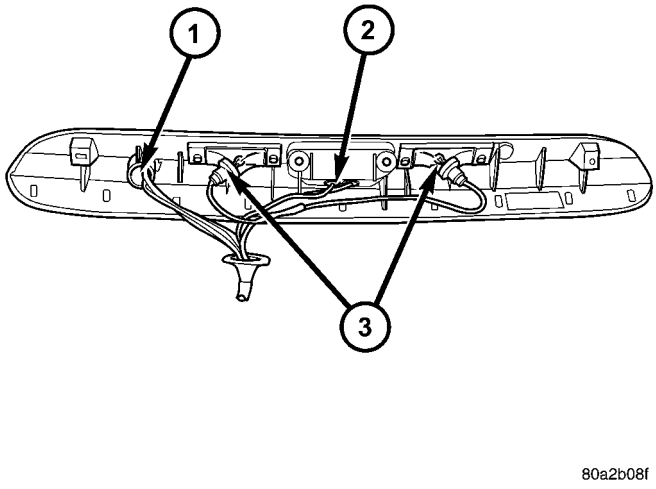

Fig. 6 REAR LIGHT BAR

1 - CHIME / THERMISTOR
2 - ELECTRIC RELEASE HANDLE SWITCH
3 - LICENSE PLATE LAMPS

(7) Verify power liftgate system and handle switch operation. Cycle the power liftgate through one complete open and close cycle, this will allow the power liftgate control module to relearn its cycle with the new components.

FULL OPEN SWITCH

DESCRIPTION

The full open switch is located on the gear motor housing (Fig. 7) and is used to signal the power liftgate control module when the power liftgate is in the full open position. Two wires are used from the full open switch contacts to the gear motor assemblies main electrical connector. The full open switch is a serviceable component.

OPERATION

When the power liftgate reaches the full open position, the gear motor housing mounted full open switch electrical contacts close. This sends a ground signal to the power liftgate control module, telling the module that the liftgate has reached the full open position.

REMOVAL

(1) Disconnect and isolate the battery negative cable.

(2) Remove the lift gear and link rod assembly from the vehicle(Refer to 8 - ELECTRICAL/POWER DOORS/CONTROL ROD - REMOVAL).

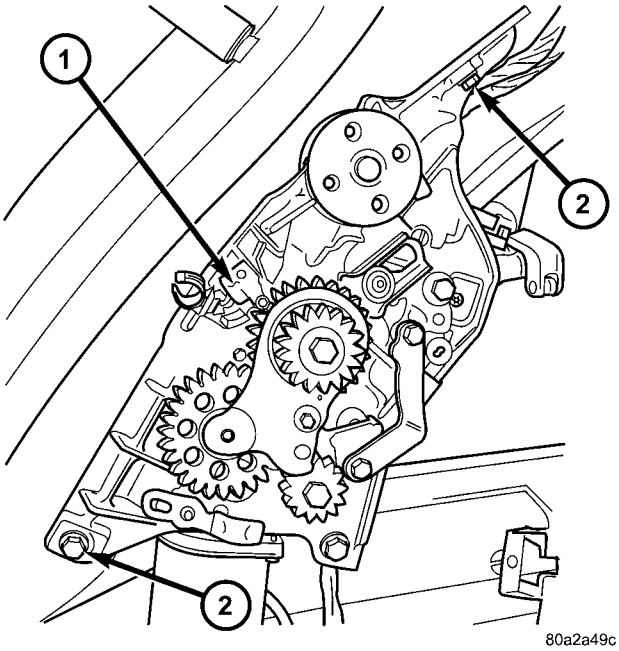

Fig. 7 FULL OPEN SWITCH LOCATION

1 - FULL OPEN SWITCH
2 - GEAR MOTOR ASSEMBLY RETAINING BOLT (1 OF 3)

(3) Cut the two wires leading to the full open switch or back the wires out of the electrical connector.

(4) Remove the full open switch retaining screw and remove the full open switch from the gear motor housing assembly.

INSTALLATION

(1) Perform a wiring repair on the full open switch wires following the approved procedure in the Wiring section of the service manual. Or install new terminals on the wire ends and reinstall in the main liftgate motor electrical connector.

(2) Position and install the full open switch retaining screw.

(3) Install the power liftgate lift gear and link rod assembly. (Refer to 8 - ELECTRICAL/POWER DOORS/CONTROL ROD - INSTALLATION)

(4) Connect the battery negative cable.

(5) Using an appropriate scan tool, check any erase any power liftgate control module diagnostic trouble codes.

(6) Verify power liftgate system and full open switch operation. Cycle the power liftgate through one complete open and close cycle, this will allow the power liftgate control module to relearn its cycle with the new components.

LATCH

DESCRIPTION

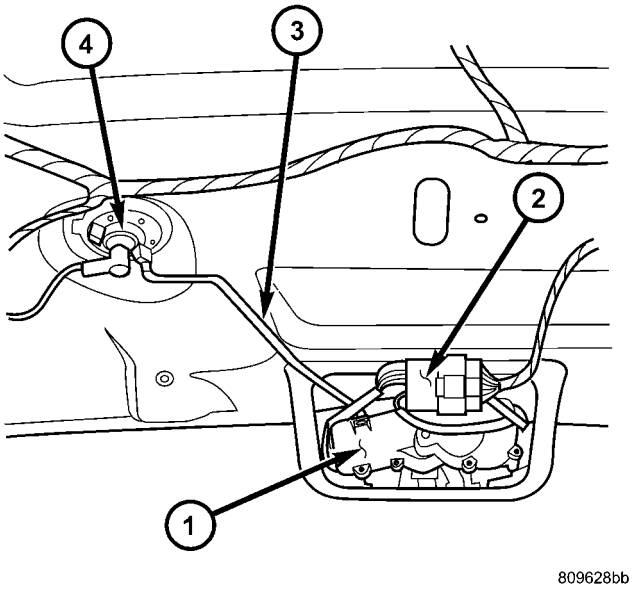

Fig. 8 POWER LATCH ORIENTATION

1 - LATCH & ACTUATOR ASSEMBLY
2 - LATCH ELECTRICAL CONNECTOR
3 - LOCK CYLINDER LINK ROD
4 - LIFTGATE LOCK CYLINDER

The power cinch/release latch performs the same features as a manual liftgate latch as well as the power cinch and / or release capability. A second type of power latch can also be found on some vehicles, this latch is designed to perform a power release only. The power cinch and release capability is accomplished by an actuator mounted to the leading edge of the latch assembly. The latch is located in the lower center of the power liftgate assembly (Fig. 8) and contains integral pawl and ratchet switches. The ratchet switch also acts as a liftgate ajar switch. The power latch assembly can be serviced as a complete assembly, latch without actuator or just the actuator.

OPERATION

On the power cinch/release latch, the latch mounted actuator provides the torque required to close the power liftgate from the secondary to the primary closed and latched position. On the power cinch/release latch and the power release only latch, the actuator releases the liftgate from the primary closed and latched position to the fully unlatched and movable position.

REMOVAL

(1) Disconnect and isolate the battery negative cable.

(2) Open the liftgate and remove the liftgate trim panel, (Refer to 23 - BODY/DECKLID/HATCH/LIFTGATE/TAILGATE/TRIM PANEL - REMOVAL).

(3) Disconnect the power latch electrical connector (Fig. 9).

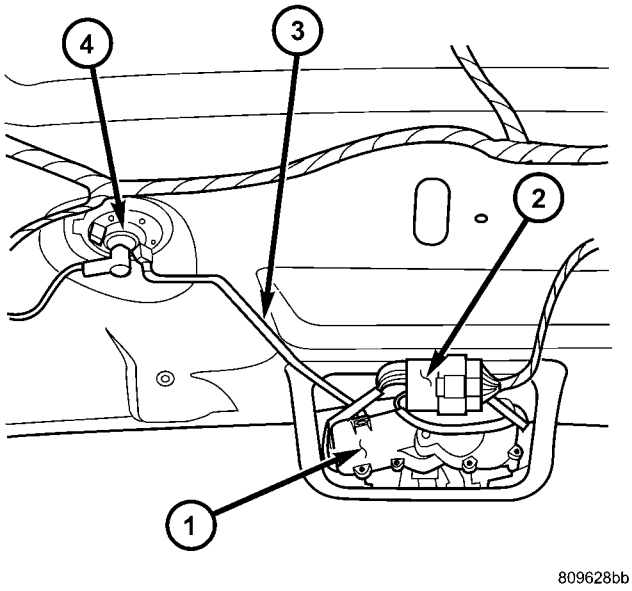

Fig. 9 POWER LATCH ORIENTATION

1 - LATCH & ACTUATOR ASSEMBLY
2 - LATCH ELECTRICAL CONNECTOR
3 - LOCK CYLINDER LINK ROD
4 - LIFTGATE LOCK CYLINDER

(4) Remove the power latch retaining bolts.

(5) Disconnect the liftgate lock cylinder link rod (Fig. 9) from the key cylinder or latch assembly. To disconnect from latch, rotate the plastic retaining clip 90 ° to unsnap clip from linkrod. Then pull link rod straight out of latch arm.

(6) Remove the power latch from the vehicle.

LATCH (Continued)

INSTALLATION

(1) Position the power latch in the vehicle.

(2) Connect the liftgate lock cylinder link rod (Fig. 10) on the cinch latch assembly. Rotate the plastic retaining clip 90 ° to lock retaining clip onto the link rod.

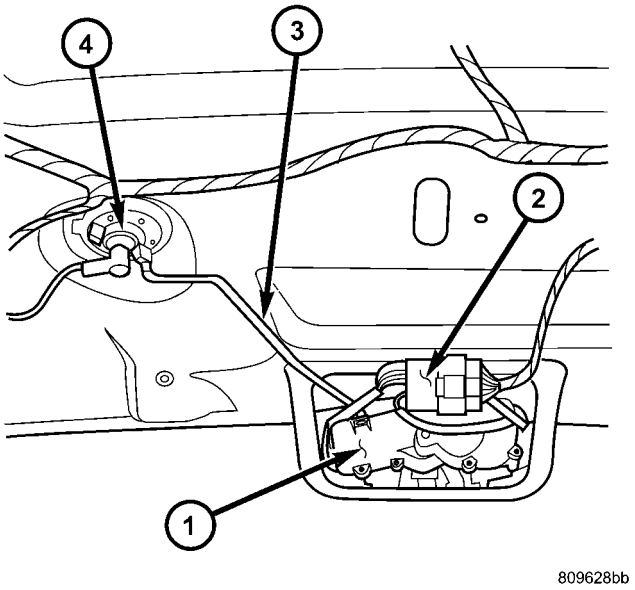

Fig. 10 POWER LATCH ORIENTATION

1 - LATCH & ACTUATOR ASSEMBLY
2 - LATCH ELECTRICAL CONNECTOR
3 - LOCK CYLINDER LINK ROD
4 - LIFTGATE LOCK CYLINDER

(3) Connect the link rod on the lock cylinder.

(4) Install three new power latch retaining bolts. Torque to 10 N·m (90 in. lbs.).

(5) Connect the power latch electrical connector and secure push pin retainers.

(6) Connect the battery negative cable.

(7) Using an appropriate scan tool, check and erase any power liftgate control module diagnostic trouble codes related to the power latch.

(8) Verify power liftgate system and power cinch / release latch operation. Cycle the power liftgate through one complete open and close cycle, this will allow the power liftgate control module to relearn its cycle with the new components.

(9) Verify power liftgate manual operation. Using liftgate key rotate the lock cylinder to verify door operation. Pull door open using exterior liftgate handle / switch.

(10) Install the liftgate trim panel, (Refer to 23 - BODY/DECKLID/HATCH/LIFTGATE/TAILGATE/ TRIM PANEL - INSTALLATION).

LATCH ACTUATOR

DESCRIPTION

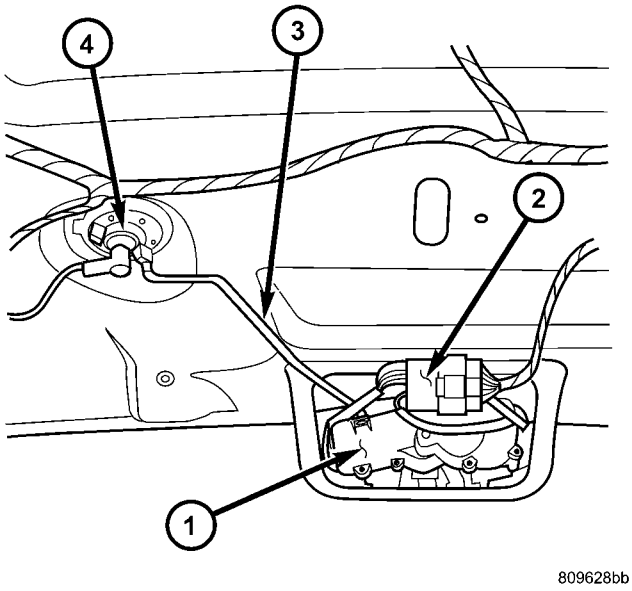

Fig. 11 POWER LATCH ORIENTATION

1 - LATCH & ACTUATOR ASSEMBLY
2 - LATCH ELECTRICAL CONNECTOR
3 - LOCK CYLINDER LINK ROD
4 - LIFTGATE LOCK CYLINDER

The power cinch and/or power release latch (Fig. 11) is made possible by a latch actuator attached to the leading edge of the power latch assembly. This 12 volt latch actuator contains a small drive gear that meshes with the latch assemblies internal gears to perform the power cinch close / power release operations. (Refer to 8 - ELECTRICAL/POWER DOORS/ LATCH - DESCRIPTION) for additional information. The power cinch/release actuator is serviceable component.

OPERATION

During a power close cycle, the power cinch actuator provides the torque required to close the power liftgate from the secondary to the primary closed and latched position. During a power open cycle, the power release actuator releases the liftgate from the primary closed and latched position to the fully unlatched and movable position.

REMOVAL

(1) Disconnect and isolate the battery negative cable.

LATCH ACTUATOR (Continued)

(2) Open the liftgate and remove the lower liftgate trim panel. (Refer to 23 - BODY/DECKLID/HATCH/LIFTGATE/TAILGATE/TRIM PANEL - REMOVAL).

(3) Disconnect the power latch electrical connector (Fig. 12).

(4) Remove the three latch retaining bolts.

(5) Grab the latch assembly and unhook the key cylinder link rod from the key cylinder (Fig. 12).

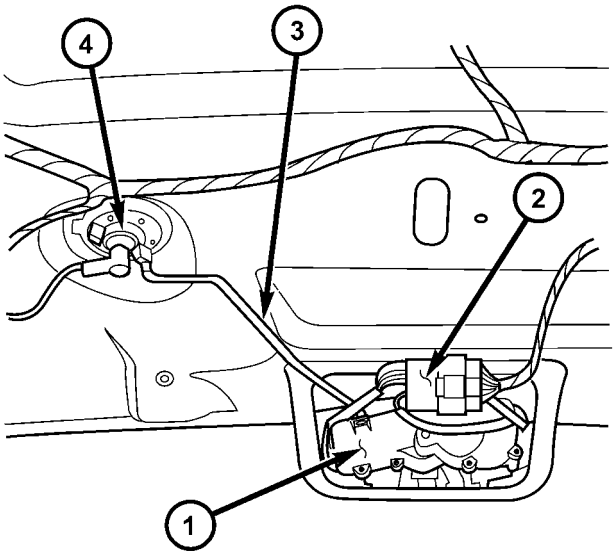

Fig. 12 POWER LATCH ORIENTATION

1 - LATCH & ACTUATOR ASSEMBLY
2 - LATCH ELECTRICAL CONNECTOR
3 - LOCK CYLINDER LINK ROD
4 - LIFTGATE LOCK CYLINDER

(6) Place the latch assembly on a bench and locate the three wires leading from the actuator portion of the latch assembly.

(7) Disengage the main connector retaining push pins from the latch actuator housing.

(8) Back the three wires out of the main latch electrical connector.

(9) Flip the latch assembly over and remove the latch actuator retaining screw(s).

(10) Remove the latch actuator from the latch assembly.

INSTALLATION

(1) Install the latch actuator onto the latch assembly.

(2) Install the three latch actuator retaining screws.

(3) Install the three wires in the main latch electrical connector.

NOTE: Be certain wires are reinstalled in the correct wire cavities. Failure to do so could result in damage to the latch actuator. Refer to the appropriate wiring information for complete circuit schematic or connector pin-out information.

(4) Secure the main connector retaining push pins on the latch actuator housing.

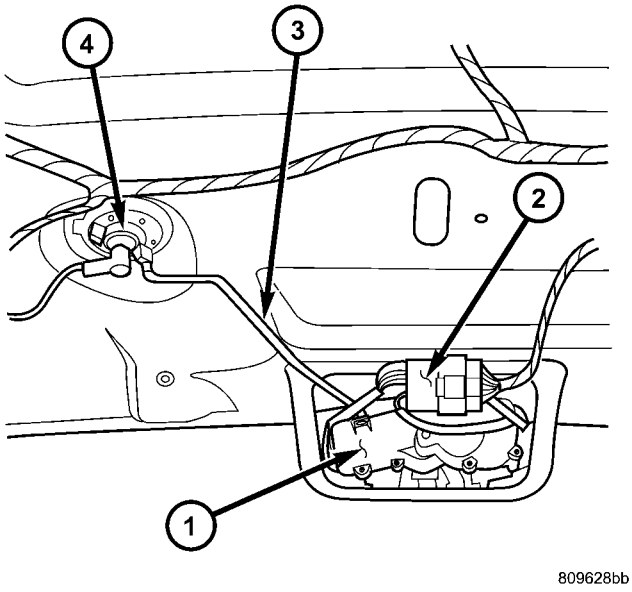

Fig. 13 POWER LATCH ORIENTATION

1 - LATCH & ACTUATOR ASSEMBLY
2 - LATCH ELECTRICAL CONNECTOR
3 - LOCK CYLINDER LINK ROD
4 - LIFTGATE LOCK CYLINDER

(5) Grab the latch assembly and hook the key cylinder link rod on the key cylinder (Fig. 13).

(6) Position the latch and install three new latch retaining bolts. Torque to 10 N·m (90 in. lbs.).

(7) Connect the power latch electrical connector (Fig. 13).

(8) Install the lower liftgate trim panel, (Refer to 23 - BODY/DECKLID/HATCH/LIFTGATE/TAILGATE/TRIM PANEL - INSTALLATION).

(9) Connect the battery negative cable.

(10) Using an appropriate scan tool, check and erase any power liftgate control module diagnostic trouble codes related to the power latch.

(11) Verify power liftgate system and power cinch / release latch operation. Cycle the power liftgate through one complete open and close cycle, this will allow the power liftgate control module to relearn its cycle with the new components.

(12) Verify power liftgate manual operation. Using liftgate key rotate the lock cylinder to verify door operation. Pull door open using exterior liftgate handle / switch.

LIFTGATE MOTOR

DESCRIPTION

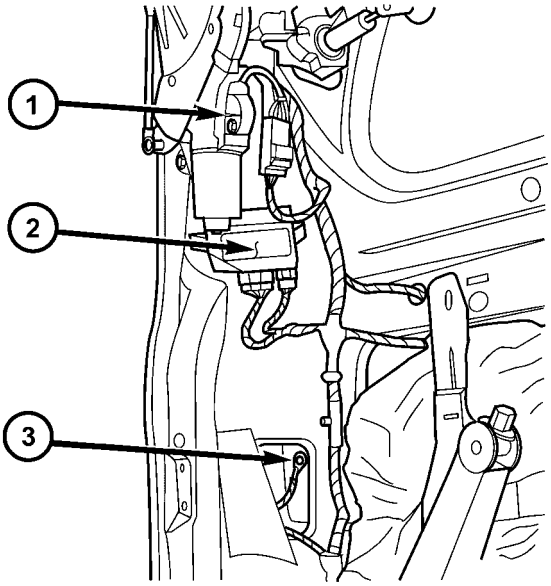

80962844

Fig. 14 POWER LIFTGATE COMPONENTS

1 - POWER LIFTGATE GEAR MOTOR/ASSEMBLY
2 - POWER LIFTGATE CONTROL MODULE
3 - ELECTRICAL GROUND LOCATION

The gear motor assembly (Fig. 14) consists of a DC motor, hall effect sensor, engage actuator, full open switch, lift gear, aluminum housing, drive gears and wire harness. The gears and motor portion of the assembly provides the power and torque required to open or close the liftgate. The hall effect sensor is used to provide the liftgate control module with a speed reading, which is used to monitor the resistance of liftgate travel. This speed reading also allows the power liftgate control module to detect obstructions and move the liftgate accordingly. The engage actuator is used to toggle between power open/close mode and full manual mode when desired. The full open switch is used to let the power liftgate control module know when the liftgate is approaching the full open position.

Serviceable components of the power liftgate gear/motor assembly are the complete gear/motor assembly, motor and wire harness, lift gear and control rod, engage actuator, full open switch and the transverse bracket.

OPERATION

With the push of a power liftgate command switch (liftgate closed), the power liftgate control module will signal the latch assembly to release the liftgate from its primary closed and latched position to the released and movable position. The liftgate motor-mounted engage actuator then engages the liftgate motor assembly, which moves the liftgate into the open position. The liftgate motor provides the torque and power to move the door to its full open or closed position(Refer to 8 - ELECTRICAL/POWER DOORS - OPERATION) for additional information.

REMOVAL

The power liftgate gear/motor assembly is serviced in two ways: the complete gear/motor assembly, or the motor, aluminum housing, drive gears and wire harness assembly. To perform this service, use the following procedure to remove the gear/motor assembly from the vehicle. Then refer to the other procedures called out in this section to transfer the remaining components (engage actuator, full open switch, transverse bracket and lift gear and rod) to the replacement gear/motor assembly.

(1) Disconnect and isolate the battery negative cable.

(2) Remove the left rear D-pillar trim panel from the vehicle, (Refer to 23 - BODY/INTERIOR/LEFT D-PILLAR TRIM PANEL - REMOVAL).

(3) Disconnect the wire harness connector from the motor assembly (Fig. 15).

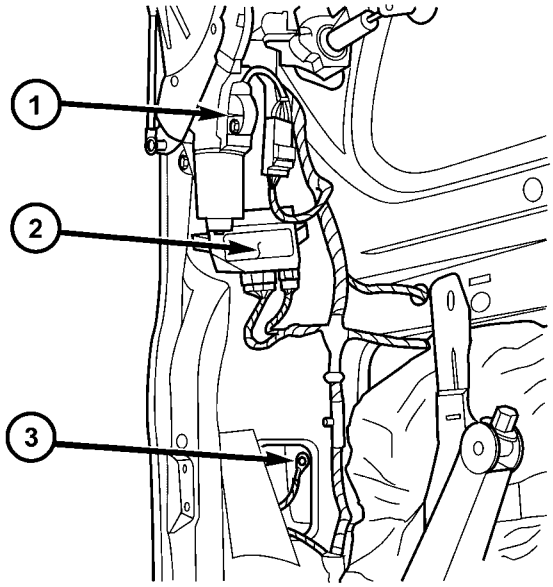

80962844

Fig. 15 POWER LIFTGATE COMPONENTS

1 - POWER LIFTGATE GEAR MOTOR/ASSEMBLY
2 - POWER LIFTGATE CONTROL MODULE
3 - ELECTRICAL GROUND LOCATION

(4) Remove the two bolts from the motor housing and the one bolt from the transverse mount bracket.

(5) Grab the liftgate motor assembly and lift upward and out to unhook the motor assembly from the D-pillar.

(6) Remove the liftgate motor assembly from the vehicle.

LIFTGATE MOTOR (Continued)

INSTALLATION

(1) Using the motor housing tab, hook the liftgate motor assembly on the D-pillar.

(2) Install the three motor assembly retaining bolts. Torque the two rear most bolts first to 9.5 N·m (85 in. lbs.). Torque the remaining bolt next to the window actuator to 9.5 N·m (85 in. lbs.).

(3) Connect the liftgate motor assembly electrical connector.

(4) Install the D-pillar trim panel on the vehicle, (Refer to 23 - BODY/INTERIOR/LEFT D-PILLAR TRIM PANEL - INSTALLATION).

(5) Connect the battery negative cable.

(6) Using an appropriate scan tool, check any erase any power liftgate control module diagnostic trouble codes related to the door motor assembly.

(7) Verify power liftgate system operation. Cycle the power liftgate through one complete open and close cycle, this will allow the power liftgate control module to relearn its cycle with the new components.

LIFT GEAR & LINK ROD

DESCRIPTION

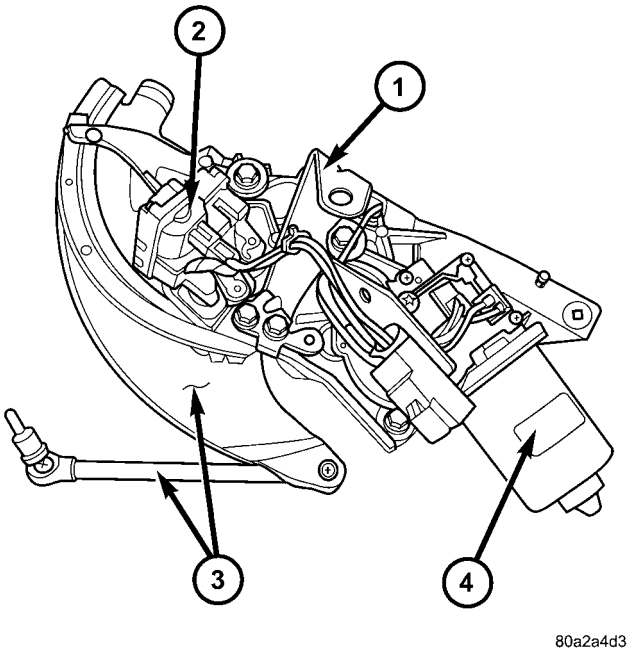

Fig. 16 LIFTGATE GEAR/MOTOR ASSEMBLY

1 - TRANSVERSE BRACKET
2 - ENGAGE ACTUATOR
3 - LIFT GEAR AND ROD ASSEMBLY
4 - LIFTGATE MOTOR

The lift gear and rod assembly are located in the left rear of the vehicle and are visible without removing the D-pillar trim (Fig. 16). The lift gear provides the leverage to move the liftgate from the closed to the open position. The lift gear attaches to a bearing on the gear motor assembly with four bolts. On the outboard side of the lift gear are riveted on teeth, which mesh with the gear motor assembly drive gears during a open or close operation. The rod assembly is a steel shaft, equipped with two spherical rod ends which attaches the lift gear to the liftgate. The lift gear and rod assembly are serviceable components.

OPERATION

One end of the rod assembly is attached to the liftgate, the other attached to the lift gear. When the lift gear is driven by the gear motor assembly the liftgate is moved to the open or closed position.

REMOVAL

(1) Disconnect and isolate the battery negative cable.

(2) Remove the left rear D-pillar trim panel from the vehicle, (Refer to 23 - BODY/INTERIOR/LEFT D-PILLAR TRIM PANEL - REMOVAL).

(3) Remove the lift gear retaining bolts (Fig. 17).

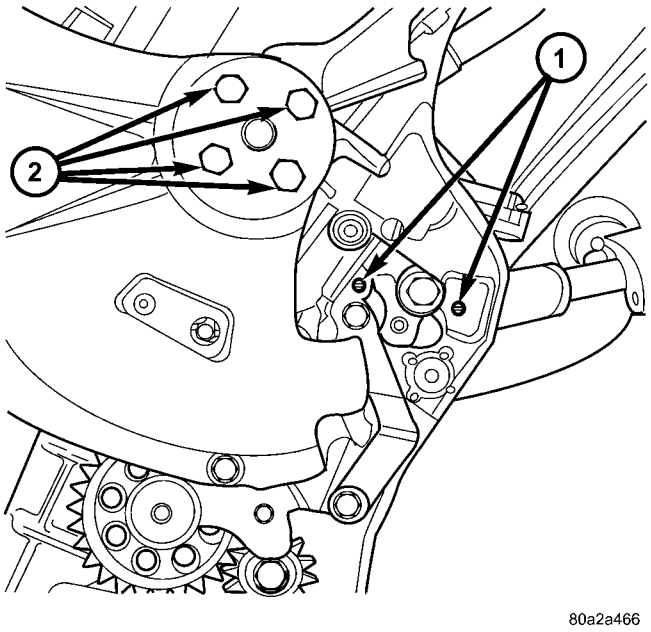

Fig. 17 LIFTGATE GEAR MOTOR ASSEMBLY

1 - ENGAGE ACTUATOR RETAINING SCREWS
2 - LIFT GEAR RETAINING BOLTS

(4) Remove the lift gear and rod from the vehicle.

LIFT GEAR & LINK ROD (Continued)

INSTALLATION

(1) Position the lift gear and rod assembly and install the retaining bolts (Fig. 18). Torque the bolts to 8 N·m (71 in. lbs.).

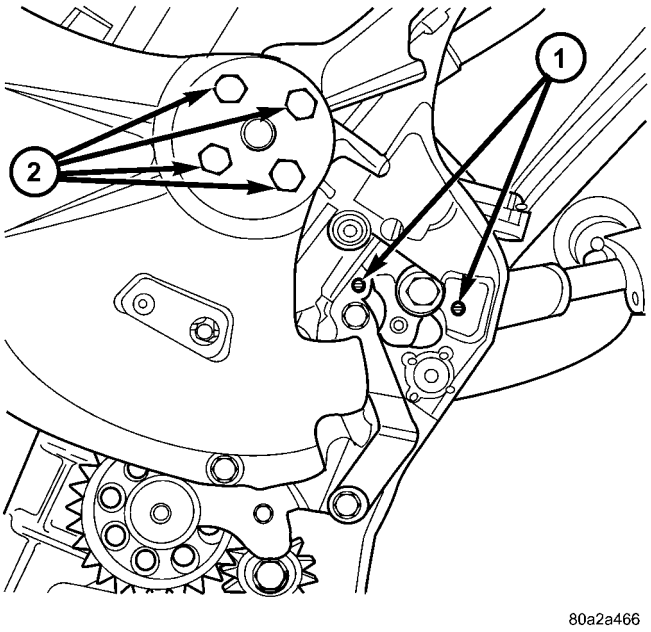

Fig. 18 LIFTGATE GEAR MOTOR ASSEMBLY

1 - ENGAGE ACTUATOR RETAINING SCREWS
2 - LIFT GEAR RETAINING BOLTS

(2) Install the D-pillar trim panel on the vehicle, (Refer to 23 - BODY/INTERIOR/LEFT D-PILLAR TRIM PANEL - INSTALLATION).

(3) Connect the battery negative cable.

(4) Using an appropriate scan tool, check any erase any power liftgate control module diagnostic trouble codes related to the door motor assembly.

(5) Verify power liftgate system operation. Cycle the power liftgate through one complete open and close cycle, this will allow the power liftgate control module to relearn its cycle with the new components.

CAUTION: Torque link rod to liftgate attachment bolt to 250 in. lbs. Care must be taken not to over-torque link rod bolt.

PINCH SENSOR

DESCRIPTION

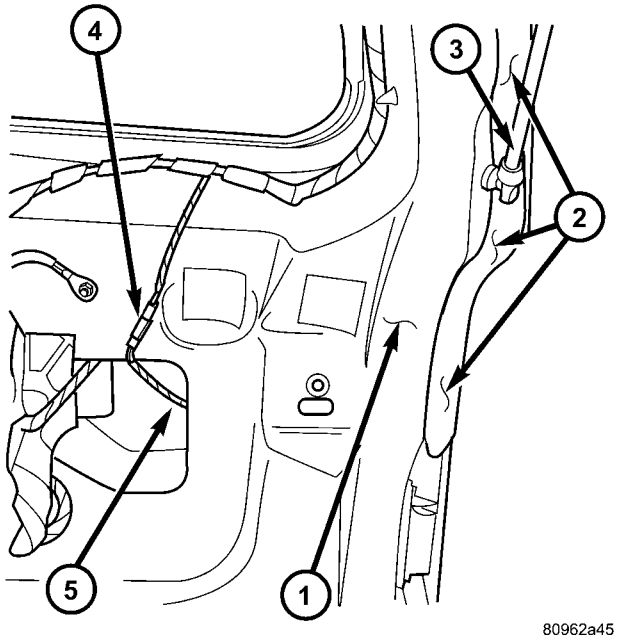

Fig. 19 PINCH SENSOR LOCATION

1 - LIFTGATE
2 - PINCH SENSOR ASSEMBLY
3 - LIFTGATE PROP ROD
4 - PINCH SENSOR WIRE HARNESS CONNECTOR
5 - PINCH SENSOR WIRE HARNESS

Pinch sensors are located on each side of the liftgate (Fig. 19). These sensors look like weather-strips, however they consist of pieces of electrically conductive rubber (tapeswitch), wires, resistor, double sided tape, and a plastic carrier. They are used to indicate an obstruction during a power liftgate close cycle.

OPERATION

During a power liftgate close cycle, if either of the two conductive rubber strips (tapeswitch) of the pinch sensor come in contact with an obstacle, the pinch sensor circuit is completed. This tells the power liftgate control module that a obstruction is felt. The control module will stop the liftgate immediately and return it to the full open position.

PINCH SENSOR (Continued)

REMOVAL

(1) Disconnect and isolate the battery negative cable.

(2) Remove trim panel from liftgate, (Refer to 23 - BODY/DECKLID/HATCH/LIFTGATE/TAILGATE/ TRIM PANEL - REMOVAL).

(3) Disconnect the pinch sensor wire harness connector (Fig. 20).

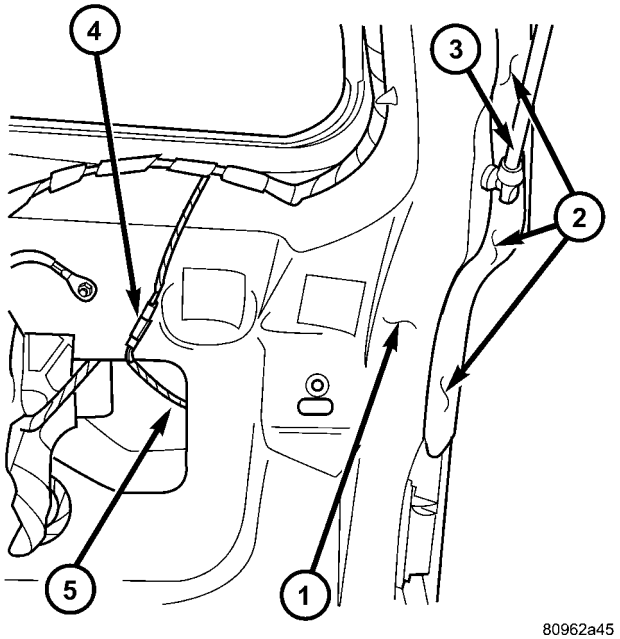

Fig. 20 PINCH SENSOR LOCATION

1 - LIFTGATE
2 - PINCH SENSOR ASSEMBLY
3 - LIFTGATE PROP ROD
4 - PINCH SENSOR WIRE HARNESS CONNECTOR
5 - PINCH SENSOR WIRE HARNESS

(4) Remove screws holding the pinch sensor to liftgate.

(5) Feed the pinch sensor wire harness out of the liftgate and remove the sensor from the vehicle.

INSTALLATION

WARNING: USE EXTREME CAUTION WHEN TESTING PINCH SENSOR OPERATION.

CAUTION: Ensure liftgate surface is clean and dry prior to pinch sensor installation. Failure to do so will inhibit the adhesive backings ability to adhere to the liftgate and cause improper system operation or premature component failure.

(1) Position the pinch sensor to the liftgate.

(2) Install the third screw from the top of the sensor first. **Do not torque screw at this time.**

(3) Install the remaining three screws holding the sensor to the liftgate. Torque all screws to 25 in. lbs.

(4) Install wire harness grommet in liftgate flange and route, connect the pinch sensor wire harness connector (Fig. 21).

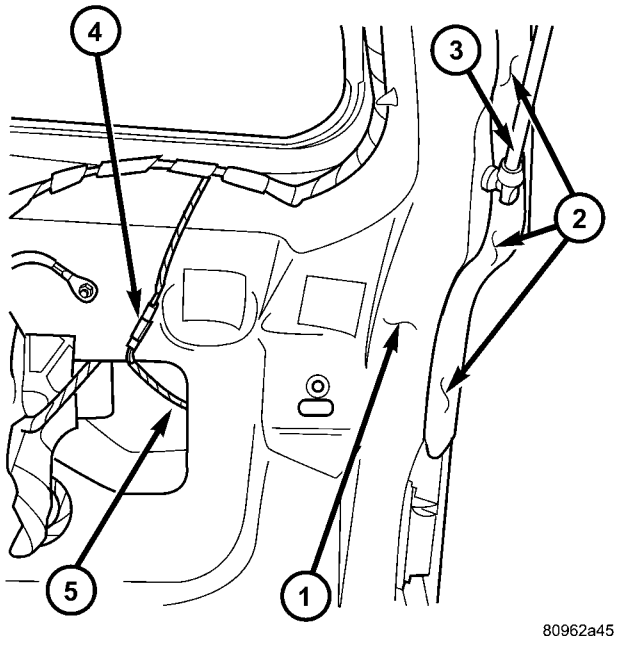

Fig. 21 PINCH SENSOR LOCATION

1 - LIFTGATE
2 - PINCH SENSOR ASSEMBLY
3 - LIFTGATE PROP ROD
4 - PINCH SENSOR WIRE HARNESS CONNECTOR
5 - PINCH SENSOR WIRE HARNESS

(5) Remove protective tap from the top of the pinch sensor. Firmly apply pressure to the sensor adhesive to secure it to the liftgate.

(6) Install the trim panel on the liftgate, (Refer to 23 - BODY/DECKLID/HATCH/LIFTGATE/TAILGATE/TRIM PANEL - INSTALLATION).

(7) Connect the battery negative cable.

(8) Using an appropriate scan tool, check and erase any power liftgate control module diagnostic trouble codes related to the pinch sensor.

(9) Verify power liftgate system and pinch sensor operation. Cycle the power liftgate through one complete open and close cycle, during the final close cycle press the pinch sensor to verify the power liftgate detects an obstruction and returns to the full open position.

TRANSVERSE BRACKET

DESCRIPTION

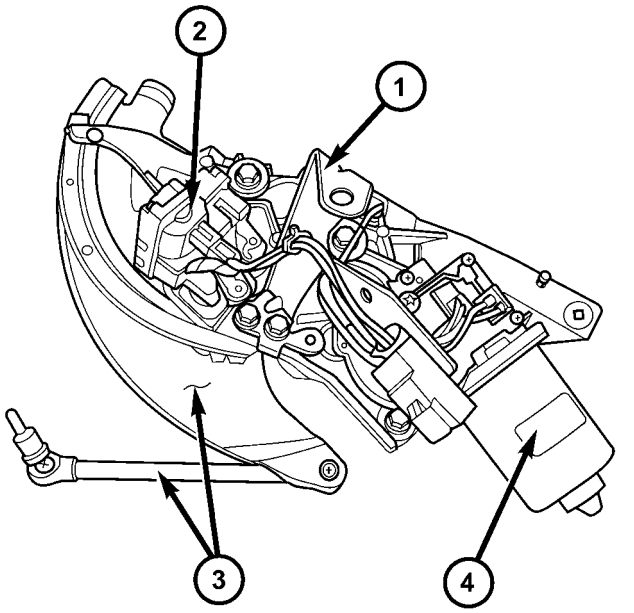

Fig. 22 LIFTGATE GEAR/MOTOR ASSEMBLY

1 - TRANSVERSE BRACKET
2 - ENGAGE ACTUATOR
3 - LIFT GEAR AND ROD ASSEMBLY
4 - LIFTGATE MOTOR

The transverse bracket (Fig. 22) is used to support and secure the power liftgate gear/motor assembly to the left rear body D-pillar. The transverse bracket is a serviceable power liftgate component.

OPERATION

The power liftgate transverse bracket supports the gear motor assembly by supplying an additional attachment point. Located on the leading edge of the gear motor assembly, one end of the transverse bracket attaches to the motor assembly the other to the leading edge of the vehicles D-pillar.

REMOVAL

(1) Disconnect and isolate the battery negative cable.

(2) Remove the left D-pillar trim from the vehicle, (Refer to 23 - BODY/INTERIOR/LEFT D-PILLAR TRIM PANEL - REMOVAL).

(3) Disconnect the gear motor assembly electrical connector and disengage retaining pushpin.

(4) Loosen the gear motor assembly retaining bolts to allow room for transverse bracket to be removed.

(5) Remove the transverse bracket retaining bolts (Fig. 23).

(6) Remove the transverse bracket from the vehicle.

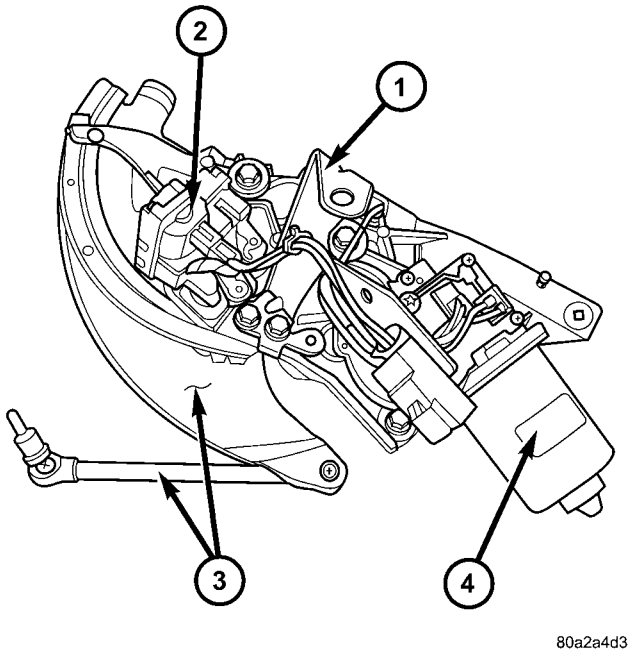

Fig. 23 LIFTGATE GEAR MOTOR ASSEMBLY

1 - TRANSVERSE BRACKET
2 - ENGAGE ACTUATOR
3 - LIFT GEAR AND ROD ASSEMBLY
4 - LIFTGATE MOTOR

INSTALLATION

(1) Position the transverse bracket in the vehicle. Be certain the transverse bracket is properly positioned. The bracket should just touch the engage actuator arm and be positioned between the actuator arm and the motor housing.

(2) Torque the transverse bracket retaining bolts to the gear motor assembly to 9.5 N·m (85 in. lbs.). Do not tighten the transverse bracket retaining bolt, located under the window actuator at this time.

(3) Torque the gear motor assembly retaining bolts to 9.5 N·m (85 in. lbs.).

(4) Torque the final transverse bracket retaining bolt to 9.5 N·m (85 in. lbs.).

(5) Connect the gear motor assembly electrical connector and engage retaining pushpin.

(6) Install the left D-pillar trim, (Refer to 23 - BODY/INTERIOR/LEFT D-PILLAR TRIM PANEL - INSTALLATION).

(7) Connect the battery negative cable.

(8) Using an appropriate scan tool, check any erase any power liftgate control module diagnostic trouble codes related to the door motor assembly.

(9) Verify power liftgate system operation. Cycle the power liftgate through one complete open and close cycle, this will allow the power liftgate control module to relearn its cycle with the new components.

POWER LOCKS

TABLE OF CONTENTS

page

POWER LOCKS
DESCRIPTION 20
OPERATION 21
DOOR CYLINDER LOCK SWITCH - EXPORT
DESCRIPTION 22
OPERATION 22
DIAGNOSIS AND TESTING
DOOR CYLINDER LOCK SWITCH - EXPORT 22
REMOVAL 22
INSTALLATION 22
DOOR LOCK MOTOR
DIAGNOSIS AND TESTING
DOOR LOCK MOTOR 23
DOOR LOCK SWITCH
DIAGNOSIS AND TESTING
DOOR LOCK SWITCH 23
REMOVAL 23
INSTALLATION 23
KEYLESS ENTRY TRANSMITTER
DIAGNOSIS AND TESTING
KEYLESS ENTRY TRANSMITTER 24
STANDARD PROCEDURE
STANDARD PROCEDURE - HORN CHIRP PREFERENCE 24
STANDARD PROCEDURE - BATTERY REPLACEMENT 24
STANDARD PROCEDURE - REMOTE KEYLESS ENTRY TRANSMITTER PROGRAMMING 24
SPECIFICATIONS
SPECIFICATIONS - TRANSMITTER RANGE . 24
SPECIFICATIONS - BATTERY 24
SLIDING DOOR LOCK MOTOR
REMOVAL 25
INSTALLATION 25

POWER LOCKS

DESCRIPTION

POWER LOCKS

The power lock system allows all of the doors to be locked or unlocked electrically by operating a switch on either front door trim panel. The power lock system receives non-switched battery current through a fuse in the Integrated Power Module (IPM), so that the power locks remain operational, regardless of the ignition switch position.

The Body Control Module (BCM) locks the doors automatically when the vehicle is driven beyond the speed of 25.7 Km/h (15 mph), all doors are closed, the accelerator pedal is depressed and the door lock actuation had not been previously activated. The rolling door lock feature is customer programmable.

This vehicle also offers several customer programmable features, which allows the selection of several optional electronic features to suit individual preferences.

The power lock system for this vehicle can also be operated remotely using the available Remote Keyless Entry (RKE) system radio frequency transmitters, if equipped.

AUTOMATIC DOOR LOCKS

When enabled, this feature will lock all of the door locks if all of the doors are closed and the vehicle speed goes above 25.7 km/h (15 mph). If a door unlock has occurred, then the BCM will perform another auto lock, if the doors did not electrically unlock, another auto lock will not occur.

DOOR LOCK INHIBIT

When the key is in the ignition (in any switch position) and either front door is opened, the door lock switches LOCK functions are disabled. The UN-LOCK functions are still functional. This protects against locking the vehicle with the key still in the ignition. The RKE key fob will still lock the doors. After the key is removed from the ignition or the doors are closed, the power door locks will operate normally.

REMOTE KEYLESS ENTRY

The Remote Keyless Entry (RKE) system allows the use of a remote battery-powered radio transmitter to communicate with the BCM to actuate the power lock system.

The RKE transmitters are also equipped with a Panic button. If the Panic button on the RKE transmitter is depressed, the horn will sound and the exterior lights will flash on the vehicle for about three minutes, or until the Panic button is depressed

a second time. Pressing the Panic button also activates the courtesy lamps. Pressing the Panic button again stops the exterior lamps from flashing and the horn from sounding. However, the courtesy lamps will remain illuminated until either the BCM times out lamp operation or until the turning of the ignition. The panic feature will operate if the ignition is ON, but only if the Panic button is pressed prior to starting the vehicle. A vehicle speed of about 25.7 km/h (15 miles-per-hour) will also cancel the panic event.

The RKE system can also perform other functions on this vehicle. If the vehicle is equipped with the optional Vehicle Theft Security System (VTSS), the RKE transmitter will arm the VTSS when the Lock button is depressed, and disarm the VTSS when the Unlock button is depressed.

The RKE system includes two transmitters when the vehicle is shipped from the factory, but the system can retain the vehicle access codes of up to a total of eight transmitters. If an RKE transmitter is inoperative or lost, new transmitter vehicle access codes can be programmed into the system using a DRB III® scan tool.

This vehicle also offers several customer programmable features, which allows the selection of several optional electronic features to suit individual preferences. Customer programmable feature options affecting the RKE system include:

- **Automatic Door Lock** - Customer programmable feature that allows the BCM to perform an automatic door lock if the vehicle speed is above 25.7 km/h (15 miles-per-hour).
- **Automatic Door Unlock On Exit** - Customer programmable feature that allows the BCM to perform an automatic door unlock if the vehicle speed is 0, vehicle in park and driver door is opened.
- **Flash Lights with Lock and Unlock** - Allows the option of having the park lamps flash as an optical verification that the RKE system received a valid Lock request or Unlock request from the RKE transmitter, or having no optical verification.
- **Programming Additional Transmitters** - Allows up to a total of four transmitter vehicle access codes to be stored.
- **Remote Unlock Sequence** - Allows the option of having only the driver side front door unlock when the RKE transmitter Unlock button is depressed the first time. The remaining doors unlock when the button is depressed a second time within 5 seconds of the first unlock press. Another option is having all doors unlock upon the first depression of the RKE transmitter Unlock button.
- **Sound Horn on Lock** - Allows the option of having the horn sound a short chirp as an audible verification that the RKE system received a valid Lock request from the RKE transmitter, or having no audible verification.

OPERATION

POWER LOCKS

The Body Control Module (BCM) locks or unlocks the doors when an actuation input signal from a door lock switch, Central Lock key cylinder or Remote Keyless Entry (RKE) is received. The BCM turns on the output drivers and provides a voltage level to the door lock motor for a specified time.

REMOTE KEYLESS ENTRY

The RKE transmitter uses radio frequency signals to communicate with the SKREEM module. The SKREEM is on the PCI bus. When the operator presses a button on the transmitter, it sends a specific request to the SKREEM. In turn, the SKREEM sends the appropriate request over the PCI bus to the following:

- **Integrated Power Module (IPM)** - to activate the park lamps, the headlamps and the horn for the horn chirp.
- **Power Liftgate Module (PLGM)** - to control the liftgate lock and unlock functions.

After pressing the lock button on the RKE transmitter, all of the door locks will lock, the illuminated entry will turn off (if all doors are closed) and the vehicle theft security system (if equipped) will arm.

Pressing the unlock button one time will unlock the driver door, or all doors based on the customer programmable feature enabled, the illuminated entry will turn on the courtesy lamps and the vehicle theft security system (if equipped) will disarm. Pressing the unlock button a second time, the remaining door locks will unlock.

If the vehicle is equipped with the memory system, the memory message will identify which transmitter (1 or 2) sent the signal.

ROLLING CODE

The rolling code feature changes part of the transmitter message each time that it is used. The transmitter message and the receiver message increment together. Under certain conditions with a rolling code system, such as pressing a button on the RKE transmitter over 255 times outside of receiver range or replacing the battery, the receiver and transmitter can fall out of synchronization. To re-synchronize, press and release the UNLOCK button on the RKE transmitter repeatedly (it may take up to eight cycles) while listening carefully for the power door locks in the vehicle to cycle, indicating that resynchronization has occurred.

POWER LOCKS (Continued)

The lock function works from the RKE transmitter even in an out of synchronization condition, therefore it could be verified by pressing the LOCK button on the RKE key fob.

DOOR CYLINDER LOCK SWITCH - EXPORT

DESCRIPTION

The Door Cylinder Lock Switch (If equipped) is used to:

- Unlock/Lock all the doors via the Central Locking feature.
- Arm/Disarm the Vehicle Theft Security System.
- Trigger the Illuminated Entry feature.

The door cylinder lock switch is mounted to the rear of the driver door lock cylinder. When installed on the rear of the cylinder, there is a tab on the lock cylinder that aligns with the switch to prevent it from turning. An anti-rotating device. The door cylinder lock switch is a one time use switch. Once it is removed from the rear of the door lock cylinder, it may not be reinstalled and a new switch must be used.

OPERATION

When the Door Cylinder Lock Switch is turned either way using the door key cylinder, the BCM reads a direct message signal from the switch.

If turning the key cylinder once, toward the front of the vehicle, this will:

(1) Mechanically unlock the door lock.

(2) Disarm the Vehicle Theft Security System (if equipped).

(3) Turn on the Illuminated Entry (if equipped) for approximately 30 seconds.

If the key cylinder is turned to the unlock position (toward the front of vehicle) twice within two seconds, all the doors and liftgate will unlock (if equipped with the central locking feature).

To lock the vehicle using the door cylinder lock switch, turn the key cylinder toward the rear of the vehicle once. This will lock the door that you are using the key on. If equipped with the central locking feature, this will lock all the other doors and liftgate. Furthermore, this will arm the vehicle theft security system and turn off the illuminated entry.

DIAGNOSIS AND TESTING

DOOR CYLINDER LOCK SWITCH - EXPORT

Any diagnosis of the power lock system should begin with the use of the DRB III® diagnostic tool. For information on the use of the DRB III®, refer to the appropriate Diagnostic Service Manual.

For complete circuit diagrams, refer to the appropriate wiring information.

(1) Visually inspect the switch for proper installation. Make sure it is seated on the rear of the key cylinder, with the tab of the door key cylinder properly aligned with the slot on the door cylinder lock switch.

(2) Disconnect the switch at the harness connector and check the resistance in each switch position.

CAUTION: Do not disconnect the switch from the rear of the door key cylinder. This switch is a one time use switch. Once it is removed from the rear of the switch, it is not reusable and must be replaced. Test the switch at the harness connector.

DOOR CYLINDER LOCK SWITCH RESISTANCE

SWITCH POSITION	RESISTANCE VALUE
COUNTERCLOCKWISE	5.4K OHMS
NEUTRAL	18.4K OHMS
CLOCKWISE	2K OHMS

REMOVAL

(1) Disconnect and isolate the battery negative cable.

(2) Remove the door trim panel of the effected door cylinder lock switch (Refer to 23 - BODY/DOOR - FRONT/TRIM PANEL - REMOVAL).

(3) Close the door window.

(4) Disconnect the door cylinder lock switch wire connector from the door harness, and wiring clip from the impact beam.

(5) Remove the outer door handle from the door.

(6) Remove the switch from the key cylinder in the door handle and remove from vehicle.

INSTALLATION

(1) Install the switch on the key cylinder in the door handle.

(2) Install the door handle.

(3) Connect the door cylinder lock switch wire connector to the door harness, and the wiring clip to the impact beam.

(4) Install the door trim panel of the affected door cylinder lock switch (Refer to 23 - BODY/DOOR - FRONT/TRIM PANEL - INSTALLATION).

(5) Connect the battery negative cable.

(6) Verify system operation.

DOOR LOCK MOTOR

DIAGNOSIS AND TESTING

DOOR LOCK MOTOR

Any diagnosis of the power lock system should begin with the use of the DRB III® diagnostic tool. For information on the use of the DRB III®, refer to the appropriate Diagnostic Service Manual.

For complete circuit diagrams, refer to the appropriate wiring information.

Verify battery condition before testing door lock motor(s).

To determine which motor is faulty, check each individual door for electrical lock and unlock or disconnect the motor connectors one at a time, while operating the door lock switch. In the event that none of the motors work, the problem may be caused by a shorted motor or a faulty switch. Disconnecting the faulty motor will allow the others to work.

To test an individual door lock motor, disconnect the electrical connector from the motor. To lock the door, connect a fused 12 volt power source to the positive pin of the lock motor and a ground wire to the other pin. To unlock the door reverse the wire connections at the motor pin terminals. If these results are not obtained, replace the door latch.

DOOR LOCK SWITCH

DIAGNOSIS AND TESTING

DOOR LOCK SWITCH

(1) Remove door trim panel. Refer to Body, Door - Front, Trim Panel, Removal and Installation.

(2) Disconnect wire connector from back of door lock switch.

(3) Depress switch to LOCK position.

(4) Using an ohmmeter, test switch resistance between Pins 2 and 3. Refer to the DOOR LOCK SWITCH CONTINUITY test and (Fig. 1).

(5) Depress switch to UNLOCK position.

(6) Test resistance between Pins 2 and 3.

(7) Test resistance between pins 2 and 3 while switch is in its normal unactuated mode.

(8) If resistance values are not within the parameters shown replace the door lock switch.

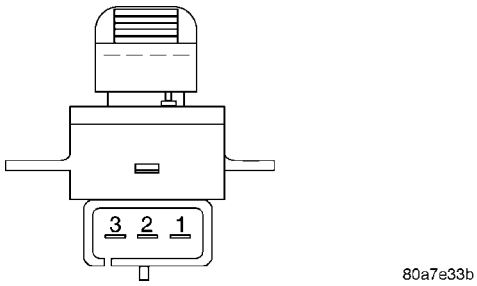

Fig. 1 DOOR LOCK SWITCH

DOOR LOCK SWITCH CONTINUITY

SWITCH POSITION	CONTINUITY BETWEEN	RESISTANCE VALUE
LOCK	2 and 3	5.3K Ohm ± 5%
UNLOCK	2 and 3	2.0K Ohm ± 5%
UNACTUATED	2 and 3	18.3K Ohms ± 5%

REMOVAL

(1) Disconnect and isolate the battery negative cable.

(2) Remove door trim panel. Refer to Body, Door - Front, Trim Panel, Removal.

(3) Disconnect wire connector from back of door lock switch.

(4) Remove two screws to door lock switch.

(5) Remove switch from vehicle.

INSTALLATION

(1) Install the switch into the vehicle.

(2) Install the two screws to door lock switch.

(3) Connect wire connector to back of door lock switch.

(4) Install door trim panel. Refer to Body, Door - Front, Trim Panel, Installation.

(5) Connect the battery negative cable.

KEYLESS ENTRY TRANSMITTER

DIAGNOSIS AND TESTING

KEYLESS ENTRY TRANSMITTER

Using special tool 9001, first test to ensure that the transmitter is functioning. Typical testing distance is 2.5 centimeters (1 inch) for Asian transmitters and 30.5 centimeters (12 inches) for all others. To test, position the transmitter as shown (Fig. 2). Press any transmitter button, then test each button individually. The tool will beep if a radio signal strength that lights five or more LED's is detected. Repeat this test three times. If transmitter fails any of the test, refer to the Diagnostic Procedures manual.

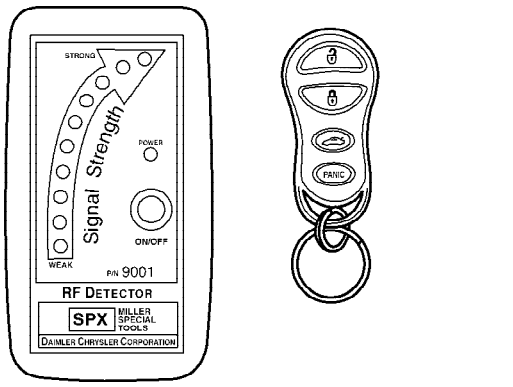

Fig. 2 TRANSMITTER DIAGNOSIS - TYPICAL

STANDARD PROCEDURE

STANDARD PROCEDURE - HORN CHIRP PREFERENCE

DISABLING

The horn chirp can be toggled using a DRB III® or by using a programmed Remote Keyless Entry (RKE) transmitter.

To DISABLE (cancelling) the horn chirp feature, press and hold the transmitter LOCK button for a minimum of five seconds. While pressing the LOCK button in, press the PANIC button. The horn chirp feature will not function until the above procedure is repeated.

ENABLING

The horn chirp can be toggled using a DRB III® or by using the Remote Keyless Entry (RKE) transmitter.

To ENABLE (reinstate) the horn chirp feature, use any one of the four programmed integrated key/key fob transmitters and reverse the above procedures. It will ENABLE the horn chirp feature for all transmitters.

STANDARD PROCEDURE - BATTERY REPLACEMENT

(1) With the transmitter buttons facing down, use a coin to pry the two halves of the transmitter apart. Make sure not to damage the rubber gasket during separation of the housing halves.

(2) Remove the battery from the transmitter back housing holder.

(3) Replace the batteries. Avoid touching the new batteries with your fingers, Skin oils may cause battery deterioration. If you touch a battery, clean it off with rubbing alcohol.

(4) To assemble the transmitter case, snap the two halves together.

STANDARD PROCEDURE - REMOTE KEYLESS ENTRY TRANSMITTER PROGRAMMING

(Refer to 8 - ELECTRICAL/VEHICLE THEFT SECURITY/TRANSPONDER KEY - STANDARD PROCEDURE) for programming procedures.

SPECIFICATIONS

SPECIFICATIONS - TRANSMITTER RANGE

Normal operation range is up to a distance of 7 meters (23 ft.) of the vehicle. Range may be better or worse depending on the environment around the vehicle.

SPECIFICATIONS - BATTERY

The batteries can be removed without special tools and are readily available at local retail stores. The recommended battery is Duracell DL 2016 or equivalent, TWO cells are required. Battery life is about three years minimum.

CAUTION: Do not touch the battery terminals or handle the batteries any more than necessary. Hands must be clean and dry.

SLIDING DOOR LOCK MOTOR

REMOVAL

(1) Disconnect and isolate the negative battery cable.
(2) Remove sliding door trim panel (Refer to 23 - BODY/DOORS - SLIDING/TRIM PANEL - REMOVAL).
(3) Remove sound pad as necessary.
(4) Remove latch/lock control cover.
(5) Remove latch/lock control.
(6) Remove screws holding door lock motor to latch/lock control (Fig. 3).
(7) Remove lock motor from control.

INSTALLATION

(1) Position the lock motor on the latch/lock.
(2) Install the screws retaining the motor to the latch/lock.
(3) Install the latch/lock control.
(4) Install the latch/lock control cover.
(5) Install the sound pad and trim panel to the sliding door.

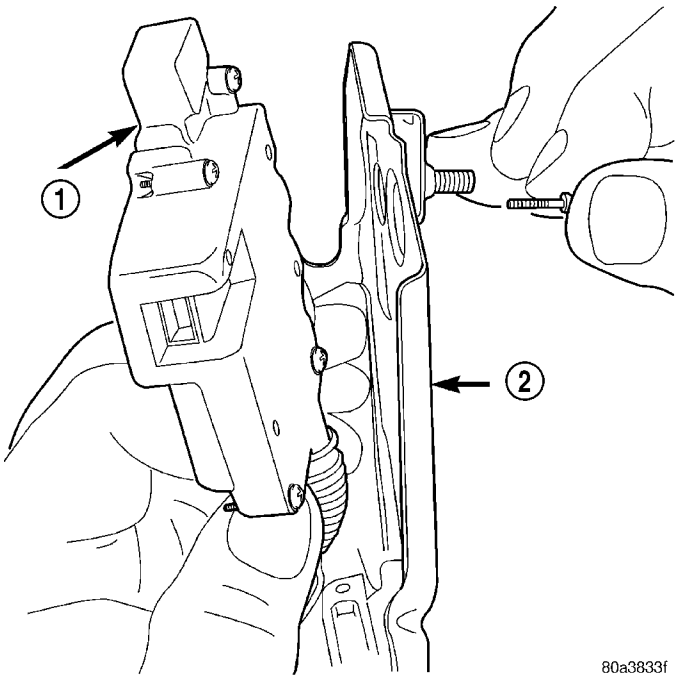

Fig. 3 SLIDING DOOR LOCK MOTOR

1 - SLIDING DOOR POWER LOCK MOTOR
2 - LATCH/LOCK CONTROL

POWER MIRRORS

TABLE OF CONTENTS

page

POWER MIRRORS
DESCRIPTION 26
OPERATION 26
DIAGNOSIS AND TESTING
POWER MIRRORS 27
AUTOMATIC DAY / NIGHT MIRROR
DESCRIPTION 28
OPERATION 28
DIAGNOSIS AND TESTING
AUTOMATIC DAY / NIGHT MIRROR 28
POWER FOLDAWAY MIRROR SWITCH - EXPORT
DESCRIPTION 29
OPERATION 29
REMOVAL 29
INSTALLATION 30
REMOTE SWITCH
DIAGNOSIS AND TESTING
REMOTE SWITCH 30
REMOVAL 30
INSTALLATION 30
SIDEVIEW MIRROR
REMOVAL 30

POWER MIRRORS

DESCRIPTION

If equipped with power mirrors, the control switch is located on the instrument panel to the left of the headlamp switch.

OPERATION

The power mirrors are connected to battery feed at all times. Each mirror head contains two electric motors, two drive mechanisms, an electric heating element, and the mirror glass. If the vehicle is equipped with the optional memory system, the driver side mirror head also contains both a horizontal and a vertical motor position sensor. One motor and drive controls mirror up-and-down movement, and the other controls right-and-left movement.

An optional driver side outside electrochromic mirror is able to automatically change its reflectance level. This mirror is controlled by the circuitry of the automatic day/night inside rear view mirror. A thin layer of electrochromic material between two pieces of conductive glass make up the face of the mirror. Two photocell sensors on the inside rear view mirror are used to monitor light levels and adjust the reflectance of both the inside and driver side outside mirrors. This change in reflectance helps to reduce the glare of headlamps approaching the vehicle from the rear. (Refer to 8 - ELECTRICAL/POWER MIRRORS/ AUTOMATIC DAY / NIGHT MIRROR - DESCRIPTION) for more information on this system.

The motors which operate the mirrors are part of the mirror assembly and cannot be serviced separately.

POWER MIRRORS (Continued)

DIAGNOSIS AND TESTING

POWER MIRRORS

(1) Remove Power Mirror Switch. (Refer to 8 - ELECTRICAL/POWER MIRRORS/POWER MIRROR SWITCH - REMOVAL).

(2) Disconnect wiring harness connector to the power mirror switch and headlamp switch.

(3) Using two jumper wires:

- Connect one to a 12-volt source
- Connect the other to a good body ground
- Refer to the Mirror Test Chart for wire hookups at the switch connector (Fig. 1).

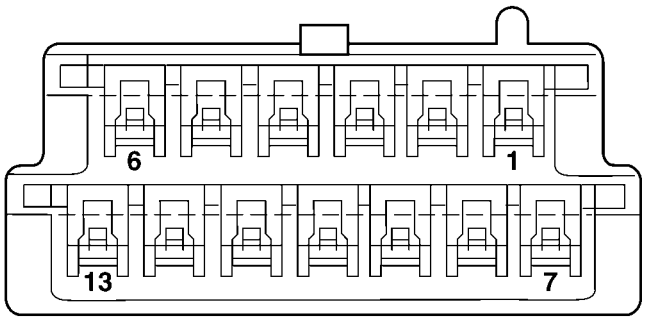

Fig. 1 Power Mirror Connector

POWER MIRROR MOTOR TEST

SWITCH CONNECTOR			
12 Volts	Ground	MIRROR REACTION	
		Right	Left
PIN 12	PIN 6	—	UP
PIN 7	PIN 6	—	LEFT
PIN 6	PIN 12	—	DOWN
PIN 6	PIN 7	—	RIGHT
PIN 13	PIN 1	UP	—
PIN 8	PIN 1	LEFT	—
PIN 1	PIN 13	DOWN	—
PIN 1	PIN 8	RIGHT	—

(4) If results shown in table are not obtained, check for broken or shorted circuit, or replace mirror assembly as necessary.

AUTOMATIC DAY / NIGHT MIRROR

DESCRIPTION

An automatic dimming inside day/night rear view mirror and an automatic dimming driver side outside rear view mirror are available factory-installed options on this model. Following is a general description of this optional equipment.

The automatic day/night mirror is able to automatically change its reflectance. A thin layer of electrochromic material between two pieces of conductive glass make up the face of the mirror. Two photocell sensors are used to monitor light levels and adjust the reflectance of the mirror to reduce the glare of headlamps approaching the vehicle from the rear.

For removal procedures, (Refer to 23 - BODY/INTERIOR/REAR VIEW MIRROR - REMOVAL).

OPERATION

The ambient photocell sensor faces forward, to detect the outside light levels. A second sensor faces rearward to detect the light level received through the vehicles back window. When the difference between the two light levels becomes too great (the light level received at the rear of the mirror is much higher than that at the front of the mirror), the mirror begins to darken.

The mirror switch allows the driver a manual control of whether the automatic dimming feature is operational. When AUTO is selected a small Light-Emitting Diode (LED), to the right of the mirror switch, is illuminated. The automatic dimming feature will only operate when the ignition switch is in the On position. The mirror also senses the backup lamp circuit, and will automatically disable its self-dimming feature whenever the transmission gear selector is in the Reverse position.

NOTE: The mirror always defaults to an ON state upon ignition.

The driver side automatic dimming mirror is standard with the automatic dimming inside mirror. The signal to control the dimming of that mirror is generated by the automatic day/night inside rear view mirror circuitry. That signal is then delivered to the driver side outside rear view mirror on a hard wired circuit.

The automatic day/night mirror cannot be repaired. If faulty or damaged, the entire inside rear view mirror assembly must be replaced.

DIAGNOSIS AND TESTING

AUTOMATIC DAY / NIGHT MIRROR

For circuit descriptions and diagrams, refer to the appropriate wiring information. The wiring information includes wiring diagrams, proper wire and connector repair procedures, details of wire harness routing and retention, connector pin-out information and location views for the various wire harness connectors, splices and grounds.

(1) Check the fuse in the intelligent power module. If OK, go to Step 2. If not OK, repair the shorted circuit or component as required and replace the faulty fuse.

(2) Turn the ignition switch to the On position. Check for battery voltage at the fuse in the intelligent power module. If OK, go to Step 3. If not OK, repair the open circuit to the ignition switch as required.

(3) Unplug the wire harness connector from the automatic day/night mirror. Check for battery voltage at the fused ignition switch output circuit cavity of the automatic day/night mirror wire harness connector. If OK, go to Step 4. If not OK, repair the open circuit to the junction block as required.

(4) Turn the ignition switch to the Off position. Check for continuity between the ground circuit cavity of the automatic day/night mirror wire harness connector and a good ground. There should be continuity. If OK, go to Step 5. If not OK, repair the circuit to ground as required.

(5) Turn the ignition switch to the On position. Set the parking brake. Place the transmission gear selector lever in the Reverse position. Check for battery voltage at the backup lamp switch output circuit cavity of the automatic day/night mirror wire harness connector. If voltage is present, reinstall the automatic day/night mirror wire harness connector and go to Step 6. If not OK, repair the open circuit as required.

(6) Place the transmission gear selector lever in the Neutral position. Place the automatic day/night mirror switch in the On (LED in the switch is lighted) position. Cover the forward facing ambient photocell sensor to keep out any ambient light.

NOTE: The ambient photocell sensor must be covered completely, so that no light reaches the sensor. Use a finger pressed tightly against the sensor, or cover the sensor completely with electrical tape.

(7) Shine a light into the rearward facing headlamp photocell sensor. The automatic day/night mirror should darken. The automatic day/night mirror should darken within 2 minutes if testing for the first time. For immediate response, turn the vehicle

AUTOMATIC DAY / NIGHT MIRROR (Continued)

OFF and back ON with the forward-facing light sensor still covered. This defeats the day-detect logic. If OK, go to Step 8. If not OK, replace the faulty mirror unit.

(8) With the mirror darkened, place the transmission gear selector lever in the Reverse position. The automatic day/night mirror should return to its normal reflectance. If not OK, replace the faulty mirror unit.

Bench testing both mirrors can be done, of care is exercised. For an inside mirror, the pin closest to he mount is 12V (+), the next is 12V (-). The third is reverse override. The fourth is outside mirror (+), and the fifth is outside mirror (-). **Do not apply 12 volts to the fourth and fifth pins.** With 12 volts on pins 1 and 2, the mirror can be tested by blocking the rear sensor and shining a light into the forward sensor. For an outside mirror, there is a 2–pin connector. Applying 1.2 volts will cause the mirror to dim. If the mirror does not dim, the entire glass assembly can be replaced just as it is when the glass is broken.

WARNING: Do not apply 12 volts to the outside mirror. Damage to the mirror will result.

POWER FOLDAWAY MIRROR SWITCH - EXPORT

DESCRIPTION

These vehicles may be equipped with Power Foldaway Mirrors. This feature allows both the driver and passenger side view mirrors to fold inward (retract) on demand. The vehicle has an additional switch located on the steering column that controls the folding function of the mirror assembly (Fig. 2).

The fold-away side view mirror is attached to the vehicle's door in the same manner as mirrors without the fold-away option. The fold-away mirrors unique option is the internal motor which allows the mirrors to fold inward on demand. The fold-away mirror motor is not serviceable separately and if a motor is found to be faulty the entire side view mirror must be replaced.

OPERATION

When the mirror retract switch is depressed, both of the side view mirrors will fold inward, Thus making the overall width of the vehicle the smallest possible. This can be helpful were parking space is a absolute minimum.

When the driver's door is opened, only the driver's door mirror will unfold. If the passenger door is opened, both mirrors will unfold.

The power fold away mirror system consists of the following components: mirror switch, side view mirror, relay, wires and fuse. Refer to the appropriate wiring information. The wiring information includes wiring diagrams, proper wire and connector repair procedures, details of wire harness routing and retention, connector pin-out information and location views for the various wire harness connectors, splices and grounds.

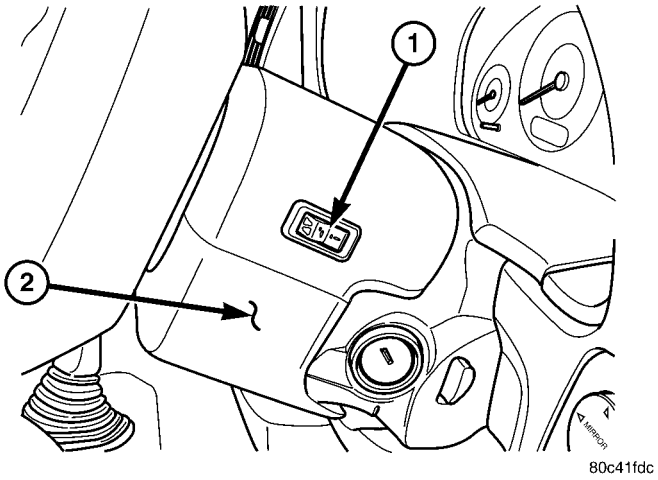

Fig. 2 POWER FOLDAWAY MIRROR SWITCH

1 - POWER FOLDAWAY MIRROR SWITCH
2 - STEERING COLUMN

REMOVAL

(1) Disconnect and isolate the battery negative cable.

(2) Remove the upper and lower steering column shroud (Refer to 19 - STEERING/COLUMN/LOWER SHROUD - REMOVAL).

(3) Disconnect electrical harness connector.

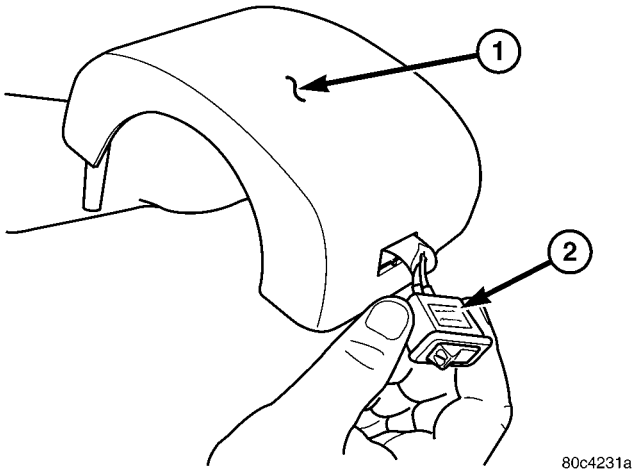

Fig. 3 POWER FOLDING MIRROR SWITCH

1 - STEERING COLUMN SHROUD
2 - POWER FOLDAWAY SWITCH

(4) Remove switch from steering column shroud (Fig. 3).

POWER FOLDAWAY MIRROR SWITCH - EXPORT (Continued)

INSTALLATION

(1) Install switch to steering column shroud.
(2) Connect wire harness connector.
(3) Install the upper and lower steering column shroud (Refer to 19 - STEERING/COLUMN/LOWER SHROUD - INSTALLATION).
(4) Connect the battery negative cable.

REMOTE SWITCH

DIAGNOSIS AND TESTING

REMOTE SWITCH

(1) Remove power mirror switch. (Refer to 8 - ELECTRICAL/POWER MIRRORS/POWER MIRROR SWITCH - REMOVAL).
(2) Disconnect wiring harness at switch connector.
(3) Using a ohmmeter, test for continuity between the terminals of the switch (Fig. 4).

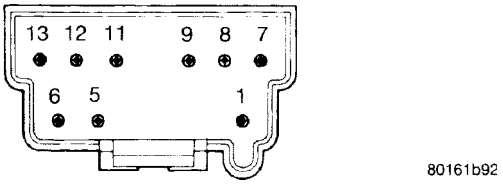

Fig. 4 Mirror Switch

MIRROR SWITCH TEST

MIRROR SELECT SWITCH IN "LEFT" POSITION	
Move Button	**Continuity Between**
UP	PIN 9 - PIN 12, PIN 6 - PIN 11, PIN 9 - PIN 13
LEFT	PIN 9 - PIN 7, PIN 6 - PIN 11, PIN 9 - PIN 8
DOWN	PIN 9 - PIN 6, PIN 12 - PIN 11, PIN 13 - PIN 11
RIGHT	PIN 9 - PIN 6, PIN 7 - PIN 11, PIN 8 - PIN 11
MIRROR SELECT SWITCH IN "RIGHT" POSITION	
Move Button	**Continuity Between**
UP	PIN 9 - PIN 13, PIN 1 - PIN 11, PIN 9 - PIN 12
LEFT	PIN 9 - PIN 8, PIN 1 - PIN 11, PIN 9 - PIN 7
DOWN	PIN 9 - PIN 1, PIN 13 - PIN 11, PIN 12 - PIN 11
RIGHT	PIN 9 - PIN 1, PIN 8 - PIN 11, PIN 7 - PIN 11

(4) If results shown in the table are not obtained, replace the switch.

REMOVAL

(1) Disconnect and isolate the battery negative cable.
(2) Remove instrument panel lower cover.
(3) From behind headlamp switch assembly, depress retaining tabs and push switch from instrument panel.
(4) Disconnect wire connector from power mirror switch.
(5) Disengage lock tabs above and below the mirror switch.
(6) Remove power mirror switch from headlamp switch bezel.

INSTALLATION

(1) Install power mirror switch to the headlamp switch bezel.
(2) Connect wire connector to the power mirror switch.
(3) Insert headlamp switch assembly into instrument panel.
(4) Install instrument panel lower cover.
(5) Connect battery negative cable.

SIDEVIEW MIRROR

REMOVAL

For service procedures, (Refer to 23 - BODY/EXTERIOR/SIDE VIEW MIRROR - REMOVAL).

POWER SEAT SYSTEM

TABLE OF CONTENTS

page

POWER SEAT SYSTEM
DESCRIPTION
POWER SEAT SYSTEM 31
MEMORY SYSTEM 32
OPERATION
POWER SEAT SYSTEM 32
MEMORY SYSTEM 33
DIAGNOSIS AND TESTING
POWER SEAT SYSTEM 33
MEMORY SYSTEM 33
SEAT SWITCH
DESCRIPTION 34
OPERATION 34
DIAGNOSIS AND TESTING
DRIVER SEAT SWITCH 34
REMOVAL 36
INSTALLATION 36
MEMORY SWITCH
DESCRIPTION 36
OPERATION 36
DIAGNOSIS AND TESTING
MEMORY SWITCH 37
REMOVAL 37
INSTALLATION 37
POWER SEAT TRACK
DESCRIPTION 37
OPERATION 38
DIAGNOSIS AND TESTING
POWER SEAT TRACK 38
REMOVAL 38
INSTALLATION 39

POWER SEAT SYSTEM

DESCRIPTION

POWER SEAT SYSTEM

The power seat system option allows the driver and front seat passenger to electrically adjust their seating positions for optimum control and comfort. The driver side power front seat can be adjusted in eight different directions: up, down, front up, front down, rear up, rear down, forward, rearward and recliner forward and rearward. The passenger side power front seat can be adjusted in four different directions: forward, rearward and recliner forward and rearward.

The power seat system receives battery current through a 40 amp fuse in the Integrated Power Module (IPM) and a 30 amp circuit breaker under the seat so that the power seats remain operational, regardless of the ignition switch position.

WARNING: SOME VEHICLES ARE EQUIPPED WITH SEATBACK MOUNTED AIRBAGS (Fig. 1). BEFORE ATTEMPTING TO DIAGNOSE OR SERVICE ANY SEAT OR POWER SEAT SYSTEM COMPONENT YOU MUST FIRST DISCONNECT AND ISOLATE THE BATTERY NEGATIVE CABLE. THEN WAIT TWO MINUTES FOR THE SYSTEM CAPACITOR TO DISCHARGE BEFORE FURTHER SYSTEM SERVICE. THIS IS THE ONLY SURE WAY TO DISABLE THE AIRBAG SYSTEM. FAILURE TO DO SO COULD RESULT IN ACCIDENTAL AIRBAG DEPLOYMENT AND POSSIBLE PERSONAL INJURY.

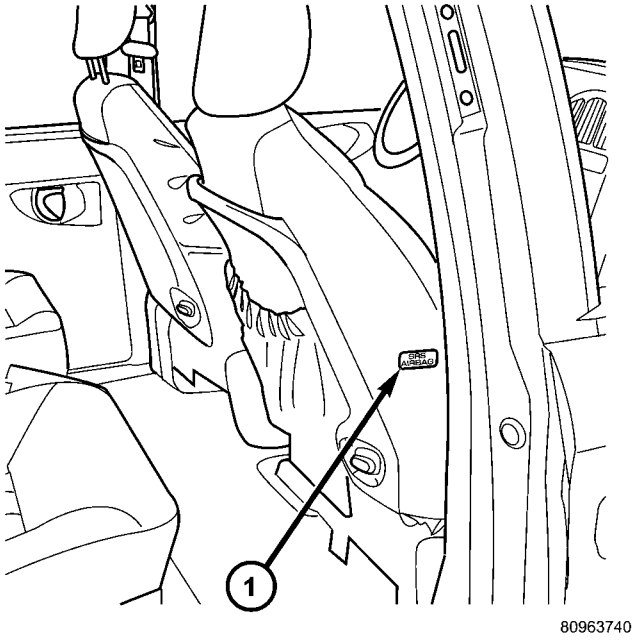

Fig. 1 IDENTIFYING A SIDE AIRBAG EQUIPPED SEAT

1 - AIRBAG LABEL

The eight-way driver side power seat is also available with the heated seat and/or memory seat system. The memory seat system automatically positions the power seat for two different drivers.

(Refer to 8 - ELECTRICAL/HEATED SEATS - DESCRIPTION) for more information on the heated seat option. (Refer to 8 - ELECTRICAL/POWER SEATS - DESCRIPTION - MEMORY SEAT SYSTEM) for more information on the memory seat system.

The power seat system includes the following components:

- Power seat recliners
- Power seat switches
- Power seat tracks
- Circuit breaker

The power seat system with memory and heated seat options includes the following components:

- Power seat recliner
- Power seat switch
- Power seat track.
- Memory Seat Mirror Module (MSMM)
- Memory set switch
- Heated Seat Module (HSM)
- Heated seat switch
- Electronic Vehicle Information Center (EVIC)

MEMORY SYSTEM

The memory system is able to store and recall the driver side power seat positions (including the power recliner position), power adjustable pedal positions and the driver outside mirror position for two drivers. On vehicles equipped with a factory radio, the memory system is also able to store and recall radio station presets for two drivers. The memory system also will store and recall the last station listened to for each driver, even if it is not one of the preset stations.

The memory system will automatically return to its preset settings when the corresponding numbered button of the memory switch is depressed, or when the doors are unlocked using the corresponding Remote Keyless Entry (RKE) transmitter. A customer programmable feature of the memory system allows the RKE recall of memory features to be disabled, if desired. This programmable feature is internal in the Electronic Vehicle Information Center (EVIC) module, which is located in the overhead console.

A Memory Seat Mirror Module (MSMM) is used to control and integrate the many electronic functions and features included in the memory seat and mirror systems.

The memory system includes the following components:

- Memory Seat Mirror Module (MSMM)
- Memory set switch
- Position potentiometers on the driver outside side view mirror
- Position potentiometers on the power adjustable pedal motor
- Position potentiometers on the driver side power seat track and power seat recliner motors
- Electronic Vehicle Information Center (EVIC)
- Radio receiver (if PCI data bus capable)

Certain functions of the memory system rely upon resources shared with other electronic modules in the vehicle over the Programmable Communications Interface (PCI) data bus network. Initial diagnosis of these electronic modules or the PCI data bus network requires the use of a DRBIII® or equivalent scan tool and the proper Diagnostic Procedures information. If this method does not prove conclusive, the proper wiring schematics and the service manual diagnostic information are required.

The other electronic modules that may affect memory system operation are:

- **Body Control Module (BCM)** - (Refer to 8 - ELECTRICAL/ELECTRONIC CONTROL MODULES/BODY CONTROL/CENTRAL TIMER MODUL - DESCRIPTION) for additional information.
- **Powertrain Control Module (PCM)** - (Refer to 8 - ELECTRICAL/ELECTRONIC CONTROL MODULES/POWERTRAIN CONTROL MODULE - DESCRIPTION) for additional information.
- **Transmission Control Module (TCM)** - (Refer to 8 - ELECTRICAL/ELECTRONIC CONTROL MODULES/TRANSMISSION CONTROL MODULE - DESCRIPTION) for additional information.

(Refer to 8 - ELECTRICAL/HEATED SEATS - DESCRIPTION) for additional information on the heated seat system. (Refer to 8 - ELECTRICAL/POWER LOCKS - DESCRIPTION) for additional information on the RKE system.

OPERATION

POWER SEAT SYSTEM

The power seat system receives battery current through fuse #22 in the Integrated Power Module (IPM) and a circuit breaker under the front seats, regardless of the ignition switch position.

When a power seat switch control knob or knobs are actuated, a battery feed and a ground path are applied through the switch contacts to the appropriate power seat track adjuster motor. The selected adjuster motor operates to move the seat track through its drive unit in the selected direction until the switch is released, or until the travel limit of the seat track is reached. When the switch is moved in the opposite direction, the battery feed and ground path to the motor are reversed through the switch contacts. This causes the adjuster motor to run in the opposite direction.

No power seat switch should be held applied in any direction after the seat track has reached its travel limit. The power seat adjuster motor each contain a

self-resetting circuit breaker to protect them from overload. However, consecutive or frequent resetting of the circuit breaker must not be allowed to continue, or the motor may be damaged.

MEMORY SYSTEM

The Memory Seat Mirror Module (MSMM) receives battery current through fuse #22 in the Integrated Power Module (IPM) and the power seat system circuit breaker, located under the driver side front seat near the rear edge of the seat cushion pan. The memory system does not operate with the Ignition-Off Draw (IOD) fuse removed. The MSMM will drive a maximum of 2 motors at a time in a given direction. If conflicting directions are requested, the priority for response will be approximately as follows:

- Seat Track Rearward or Forward
- Seat Front Down or Up
- Seat Rear Down or Up
- Recliner Rearward or Forward

The inputs from these switches to the MSMM is a current limited battery source fed by the MSMM. This protects the MSMM printed circuit board traces from acting as fuses. All of these switch contact inputs to the MSMM are normally closed to ground, except when actuated.

For diagnosis of the MSMM, the Programmable Communication Interface (PCI) data bus, or the other electronic modules on the PCI data bus that provide inputs and outputs for the memory system, the use of a DRBIII® or equivalent scan tool and the proper Diagnostic Procedures information is recommended.

ELECTRONIC VEHICLE INFORMATION CENTER

The Electronic Vehicle Information Center (EVIC) serves as the user interface for the memory system. It displays memory system status messages and provides the user with the means for enabling and disabling the many customer programmable features available on the vehicle, including those for the memory system.

(Refer to 8 - ELECTRICAL/OVERHEAD CONSOLE/ELECTRONIC VEHICLE INFO CENTER - DESCRIPTION) for additional information on the EVIC.

DIAGNOSIS AND TESTING

POWER SEAT SYSTEM

Following are tests that will help to diagnose the hard wired components and circuits of the power seat system. However, if the vehicle is also equipped with the optional memory system, these tests may not prove conclusive in the diagnosis of the driver side power seat. In order to obtain conclusive testing of the driver side power seat with the memory system option, the Programmable Communications Interface (PCI) data bus network and all of the electronic modules that provide inputs to, or receive outputs from the memory system components must be checked, (Refer to 8 - ELECTRICAL/POWER SEATS - DIAGNOSIS AND TESTING).

WARNING: SOME VEHICLES ARE EQUIPPED WITH SEATBACK MOUNTED AIRBAGS. BEFORE ATTEMPTING TO DIAGNOSE OR SERVICE ANY SEAT OR POWER SEAT SYSTEM COMPONENT YOU MUST FIRST DISCONNECT AND ISOLATE THE BATTERY NEGATIVE CABLE. THEN WAIT TWO MINUTES FOR THE SYSTEM CAPACITOR TO DISCHARGE BEFORE FURTHER SYSTEM SERVICE. THIS IS THE ONLY SURE WAY TO DISABLE THE AIRBAG SYSTEM. FAILURE TO DO SO COULD RESULT IN ACCIDENTAL AIRBAG DEPLOYMENT AND POSSIBLE PERSONAL INJURY.

(1) If either power seat is completely inoperable, check the power seat circuit breaker, located under the trailing edge of the driver side power seat. If the power seat circuit breaker is OK, continue to the next step.

(2) Check for proper battery and ground connections at the power seat switch and/or memory seat module. Repair any wiring as necessary.

(3) Check the power seat system wire harness connections and pins to ensure proper circuit continuity and ground paths.

MEMORY SYSTEM

In order to obtain conclusive testing of the memory system, the Programmable Communications Interface (PCI) data bus network and all of the electronic modules that provide inputs to, or receive outputs from the memory system components must be checked.

The most reliable, efficient, and accurate means to diagnose the driver side power seat with the memory system option requires the use of a DRBIII® or equivalent scan tool and the proper Diagnostic Procedures information. The DRBIII® scan tool can provide confirmation that the PCI data bus is functional, that all of the electronic modules are sending and receiving the proper messages on the PCI data bus, and that the memory system is receiving the proper hard wired inputs and relaying the proper hard wired outputs to perform its driver side power seat functions.

(1) If the driver power seat exhibits an interrupted or jerky motion, ensure the wire harness is connected correctly. To verify the concern, obtain a DRB III® or equivalent scan tool and energize each axis one at a time. If any axis stops in approximately 2 seconds (without hitting the end of travel), the feedback for

that axis may have an open, short or be incorrectly connected. Check the wiring to that axis (module to motor). Repair any wiring problems and retry that axis. Refer to the appropriate wiring information for complete circuit schematic or connector pin-out information.

SEAT SWITCH

DESCRIPTION

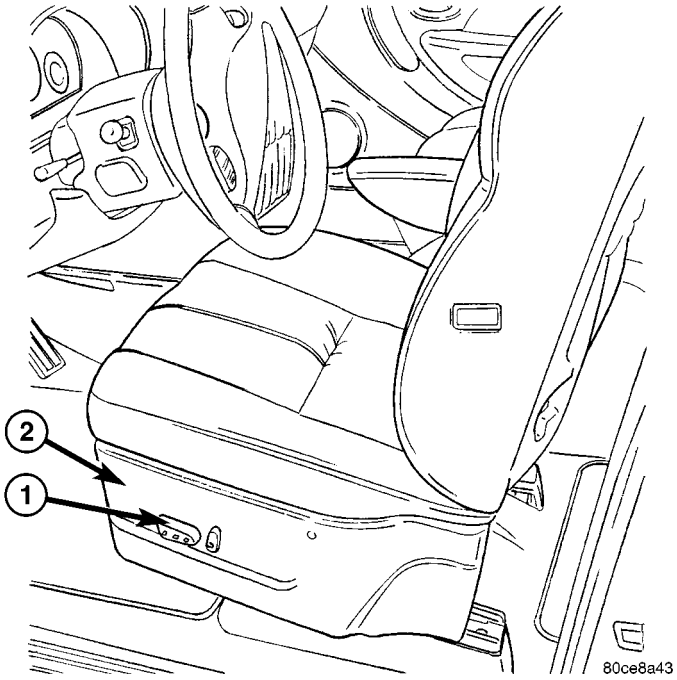

Fig. 2 POWER SEAT SWITCH LOCATION

1 - POWER SEAT SWITCH
2 - SEAT CUSHION SIDE SHIELD

Vehicles equipped with a driver side power seat utilize an eight-way power seat switch. Vehicles equipped with a passenger side power seat utilize a four-way power seat switch. These power seat switches features two knobs ganged together on the outboard seat cushion side shield (Fig. 2).

The switch is secured to the back of the seat cushion side shield with two screws. However, the control knobs for the seat switch unit must be removed before the seat switch can be removed from the side shield.

The power seat switch cannot be repaired. If one switch is damaged or faulty, the entire power seat switch unit must be replaced.

OPERATION

When a power seat switch control knob or knobs are actuated, a battery feed and a ground path are applied through the switch contacts to the power seat track or recliner adjuster motor. The selected adjuster motor operates to move the seat track or recliner through its drive unit in the selected direction until the switch is released, or until the travel limit of the adjuster is reached. When the switch is moved in the opposite direction, the battery feed and ground path to the motor are reversed through the switch contacts. This causes the adjuster motor to run in the opposite direction.

No power seat switch should be held applied in any direction after the adjuster has reached its travel limit. The power seat adjuster motors each contain a self-resetting circuit breaker to protect them from overload. However, consecutive or frequent resetting of the circuit breaker must not be allowed to continue, or the motor may be damaged.

DIAGNOSIS AND TESTING

DRIVER SEAT SWITCH

(1) Remove the power seat switch, (Refer to 8 - ELECTRICAL/POWER SEATS/DRIVER SEAT SWITCH - REMOVAL).

(2) Using an ohmmeter, check pin #1 of the power seat switch wire harness connector for continuity to ground. It should be present. If OK, go to Step 3. If not OK, repair the open ground circuit as required.

(3) Using a voltmeter, check pin #5 of the power seat switch wire harness connector for battery current. It should be present. If OK, go to Step 4. If not OK, repair the open voltage supply circuit as required.

(4) Using an ohmmeter, test the power seat switch for continuity, refer to SEAT SWITCH CONTINUITY TEST TABLE (Fig. 3). If continuity is not present as indicated, replace the power seat switch.

SEAT SWITCH (Continued)

SEAT SWITCH CONTINUITY TEST TABLE

SWITCH POSITION	CONTINUITY BETWEEN PINS	CONTINUITY BETWEEN PINS
	DRIVER	PASSENGER
OFF	PIN 1 & 4 PIN 1 & 3 PIN 1 & 2 PIN 1 & 10 PIN 1 & 9 PIN 1 & 8 PIN 1 & 7 PIN 1 & 6	PIN 1 & 4 PIN 1 & 3 PIN 1 & 2 PIN 1 & 10 PIN 1 & 9 PIN 1 & 8 PIN 1 & 7 PIN 1 & 6
FRONT RISER UP	PIN 5 & 7	PIN 5 & 10
FRONT RISER DOWN	PIN 5 & 10	PIN 5 & 7
CENTER SWITCH FORWARD	PIN 5 & 6	PIN 5 & 6
CENTER SWITCH REARWARD	PIN 5 & 3	PIN 5 & 3
REAR RISER UP	PIN 5 & 8	PIN 5 & 9
REAR RISER DOWN	PIN 5 & 9	PIN 5 & 8
RECLINER UP	PIN 5 & 2	PIN 5 & 2
RECLINER DOWN	PIN 5 & 4	PIN 5 & 4

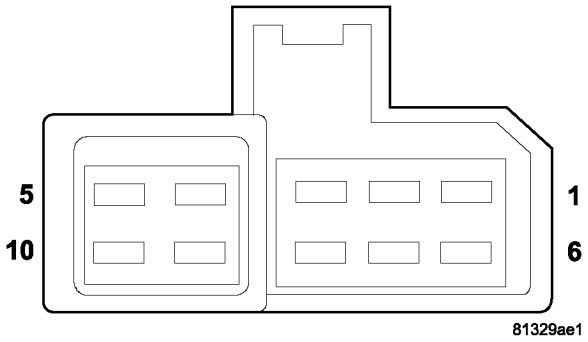

Fig. 3 SEAT SWITCH PIN-OUT

SEAT SWITCH (Continued)

REMOVAL

(1) Disconnect and isolate the battery negative cable.

(2) Using a push pin remover or other suitable wide flat-bladed tool, gently pry the power seat and power recliner switch knobs off of the switch levers (Fig. 4).

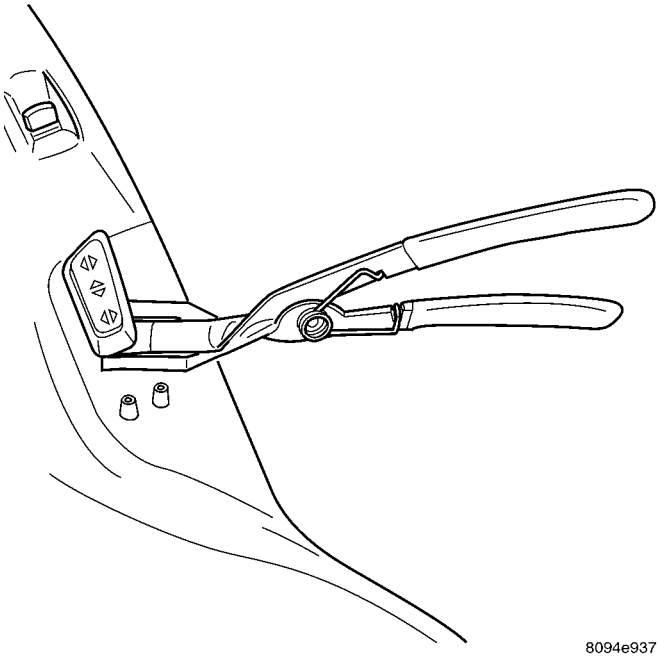

Fig. 4 REMOVING SWITCH CONTROL KNOBS - TYPICAL

(3) Remove the screws that secure the outboard seat cushion side cover to the seat cushion frame, (Refer to 23 - BODY/SEATS/SEAT CUSHION SIDE COVERS - REMOVAL).

(4) Pull the outboard seat cushion side cover away from the seat cushion frame far enough to access the power seat switch wire harness connector.

(5) Disconnect the power seat wire harness connector from the power seat switch connector receptacle.

(6) Remove the screws that secure the power seat switch to the inside of the outboard seat cushion side cover.

(7) Remove the power seat switch from the outboard seat cushion side cover.

INSTALLATION

(1) Position the power seat switch onto the outboard seat cushion side cover.

(2) Install and tighten the screws that secure the power seat switch to the inside of the outboard seat cushion side cover. Tighten the screws to 1.5 N·m (14 in. lbs.).

(3) Reconnect the power seat wire harness connector to the power seat switch connector receptacle.

(4) Install the outboard seat cushion side cover, (Refer to 23 - BODY/SEATS/SEAT CUSHION SIDE COVERS - INSTALLATION).

(5) Install the power seat and power recliner switch knobs onto the switch control levers.

(6) Reconnect the battery negative cable.

MEMORY SWITCH

DESCRIPTION

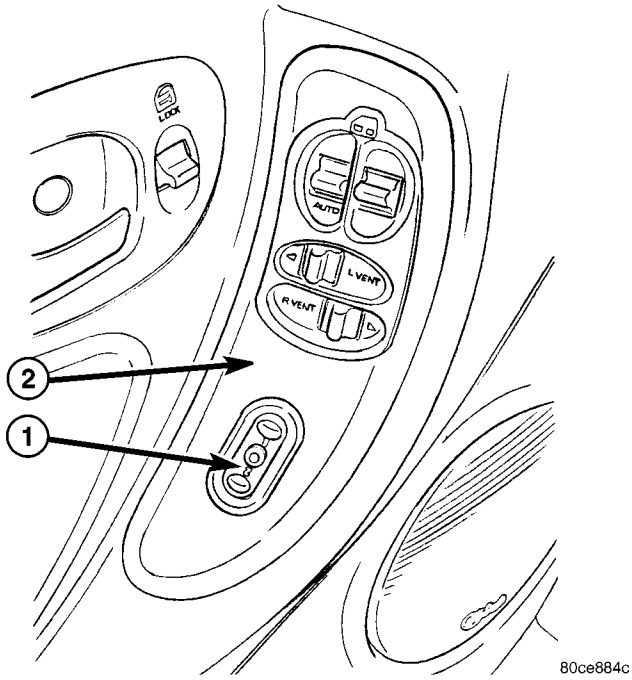

Fig. 5 MEMORY SWITCH LOCATION

1 - MEMORY SWITCH
2 - SWITCH BEZEL

Vehicles equipped with the memory system have a memory switch mounted to the driver side front door trim panel (Fig. 5). This switch is used to set and recall all of the memory system settings for up to two drivers. The memory switch is a resistor multiplexed unit that is hard wired to the Body Control Module (BCM). The BCM sends out the memory system set and recall requests to the other electronic modules over the Programmable Communications Interface (PCI) data bus.

The memory switch cannot be adjusted or repaired and, if faulty or damaged, it must be replaced.

OPERATION

The memory switch has three momentary switch buttons labeled Set, 1 and 2. When the memory set switch is depressed, a resistance value is sent to the Body Control Module (BCM) via hard wired connections. When the memory system is in “set” mode a chime will be generated by the BCM.

MEMORY SWITCH (Continued)

DIAGNOSIS AND TESTING

MEMORY SWITCH

(1) Remove the memory switch from the drivers door panel (Refer to 8 - ELECTRICAL/POWER SEATS/MEMORY SET SWITCH - REMOVAL).

(2) Using an ohmmeter, check the continuity of the memory select switch MUX circuit between the C2 wire harness connector for the Body Control Module (BCM) and the wire harness connector for the memory switch. There should be continuity. If OK, go to Step 3. If not OK, repair the open or shorted MUX circuit as required.

(3) Using an ohmmeter, check the continuity of the memory select switch return circuit between the C2 wire harness connector for the BCM and the wire harness connector for the memory switch. There should be continuity. If OK, go to Step 4. If not OK, repair the open or shorted return circuit as required.

(4) Using an ohmmeter, test the resistances of the memory switch, refer to the MEMORY SWITCH TEST TABLE. If OK, (Refer to 8 - ELECTRICAL/POWER SEATS - DIAGNOSIS AND TESTING - MEMORY SYSTEM). If not OK, replace the memory switch, (Refer to 8 - ELECTRICAL/POWER SEATS/MEMORY SET SWITCH - REMOVAL).

MEMORY SWITCH TEST TABLE

MEMORY SWITCH POSITION	RESISTANCE BETWEEN PINS	RESISTANCE RANGE (OHMS)
NEUTRAL	1&2	24650 ± 5% (24.65 k)
MEMORY 1	1&2	6850 ± 5% (6.85 k)
MEMORY 2	1&2	2100 ± 5% (2.10 k)
SET	1&2	4490 ± 5% (4.49 k)

REMOVAL

(1) Disconnect and isolate the battery negative cable.

(2) Remove the front door trim panel switch bezel from the driver side front door. Using a thin flat-bladed pry tool, gently pry the switch bezel away from the drivers door trim panel.

(3) Disconnect the memory switch wire harness connector from the memory switch.

(4) Remove the two screws that secure the memory switch to the back of the driver side front door trim panel switch bezel.

(5) Remove the memory switch.

INSTALLATION

(1) Position the memory switch and install and tighten the two screws that secure the memory switch to the back of the driver side front door trim panel switch bezel. Tighten the screws to 2.2 N·m (20 in. lbs.).

(2) Reconnect the memory switch wire harness connector to the memory switch.

(3) Install the trim panel switch bezel onto the driver side front door.

(4) Reconnect the battery negative cable.

POWER SEAT TRACK

DESCRIPTION

The power seat option includes an electrically operated power seat track located under the front seat. If equipped with Memory System, the front power seat track on the driver side of the vehicle also provides the mounting location for the Memory Seat/Mirror Module (MSMM). The power seat circuit breakers are mounted on the rear of the power seat track, just behind the seat rear trim panel. The lower half of the power seat track is secured to the floor panel via four studs and nuts that must be accessed from the underside of the vehicle. Four bolts secure the bottom of the seat cushion pan to the upper half of the power seat track unit. Four additional bolts secure the seat back frame to the power seat track unit.

The eight-way power seat track unit includes four reversible electric motors that are secured to the upper half of the track unit. Each motor moves the seat adjuster through a combination of worm-drive gearboxes and screw-type drive units. Each of the four power seat track motors used on models equipped with the optional memory system incorporate a position potentiometer integral to the motor assembly, which electronically monitors the motor position. This enables the memory system to function by referencing the motor positions programmed into the memory seat/mirror module.

The front and rear of the seat are operated by two separate vertical adjustment motors. These motors can be operated independently of each other, tilting the entire seat assembly forward or rearward. They can also be operated in unison by selecting the proper power seat switch functions, which will raise or lower the entire seat assembly. A third motor is the horizontal adjustment motor, which moves the seat track in the forward and aft directions. The forth motor is the recliner adjustment motor, which moves the seat back in the forward and rearward directions.

The four-way power seat track unit includes two reversible electric motors that are secured to the

POWER SEAT TRACK (Continued)

upper half of the track unit. Each motor moves the seat adjuster through a combination of worm-drive gearboxes and screw-type drive units. The horizontal adjustment motor moves the seat track in the forward and aft directions. The recliner adjustment motor moves the seat back in the forward and rearward directions.

The power seat track unit cannot be repaired, and is serviced only as a complete unit. If any component in this unit is faulty or damaged, the entire power seat track unit must be replaced.

OPERATION

When the power seat switch control knob or knobs are actuated, a battery feed and a ground path are applied through the switch contacts to the power seat track or recliner adjuster motor. The selected adjuster motor operates to move the seat track or recliner through its drive unit in the selected direction until the switch is released, or until the travel limit of the adjuster is reached. When the switch is moved in the opposite direction, the battery feed and ground path to the motor are reversed through the switch contacts. This causes the adjuster motor to run in the opposite direction.

No power seat switch should be held applied in any direction after the adjuster has reached its travel limit. The power seat adjuster motors each contain a self-resetting circuit breaker to protect them from overload. However, consecutive or frequent resetting of the circuit breaker must not be allowed to continue, or the motor may be damaged.

DIAGNOSIS AND TESTING

POWER SEAT TRACK

WARNING: SOME VEHICLES ARE EQUIPPED WITH SEATBACK MOUNTED AIRBAGS. BEFORE ATTEMPTING TO DIAGNOSE OR SERVICE ANY SEAT OR POWER SEAT SYSTEM COMPONENT YOU MUST FIRST DISCONNECT AND ISOLATE THE BATTERY NEGATIVE CABLE. THEN WAIT TWO MINUTES FOR THE SYSTEM CAPACITOR TO DISCHARGE BEFORE FURTHER SYSTEM SERVICE. THIS IS THE ONLY SURE WAY TO DISABLE THE AIRBAG SYSTEM. FAILURE TO DO SO COULD RESULT IN ACCIDENTAL AIRBAG DEPLOYMENT AND POSSIBLE PERSONAL INJURY.

Actuate the power seat switch to move the power seat track adjusters in each direction. The power seat track adjusters should move in each of the selected directions. If a power seat track adjuster operates in one direction only, move the adjuster a short distance in the opposite direction and test again to be certain that the adjuster is not at its travel limit. If the power seat track adjuster still operates in one direction only, (Refer to 8 - ELECTRICAL/POWER SEATS/DRIVER SEAT SWITCH - DIAGNOSIS AND TESTING). If the power seat track adjuster does not operate in more than one direction, perform the following tests.

TESTING POWER SEAT TRACK MOTORS

(1) Check the power seat circuit breaker under the seat. If OK, go to Step 2. If not OK, replace the faulty power seat circuit breaker.

(2) Check for battery voltage at the power seat circuit breaker under the seat. If OK, go to Step 3. If not OK, repair the open fused B(+) circuit to the fuse in the Integrated Power Module (IPM) as required.

(3) Remove the outboard seat cushion side cover, (Refer to 23 - BODY/SEATS/SEAT CUSHION SIDE COVERS - REMOVAL). Disconnect the wire harness connector from the power seat switch. Check for battery voltage at the fused B(+) circuit cavity of the power seat switch wire harness connector. If OK, go to Step 4. If not OK, repair the open fused B(+) circuit to the power seat circuit breaker under the seat as required.

(4) Check for continuity between the ground circuit cavity of the power seat switch wire harness connector and a known good ground. There should be continuity. If OK, go to Step 5. If not OK, repair the open ground circuit as required.

(5) Test the power seat switch, (Refer to 8 - ELECTRICAL/POWER SEATS/DRIVER SEAT SWITCH - DIAGNOSIS AND TESTING). If the switch tests OK, test the circuits of the power seat wire harness between the inoperative power seat track adjuster motor and the power seat switch for shorts or opens. If the circuits check OK, replace the faulty power seat track unit. If the circuits are not OK, repair the power seat wire harness as required.

REMOVAL

WARNING: SOME VEHICLES ARE EQUIPPED WITH SEATBACK MOUNTED AIRBAGS. BEFORE ATTEMPTING TO DIAGNOSE OR SERVICE ANY SEAT OR POWER SEAT SYSTEM COMPONENT YOU MUST FIRST DISCONNECT AND ISOLATE THE BATTERY NEGATIVE CABLE. THEN WAIT TWO MINUTES FOR THE SYSTEM CAPACITOR TO DISCHARGE BEFORE FURTHER SYSTEM SERVICE. THIS IS THE ONLY SURE WAY TO DISABLE THE AIRBAG SYSTEM. FAILURE TO DO SO COULD RESULT IN ACCIDENTAL AIRBAG DEPLOYMENT AND POSSIBLE PERSONAL INJURY.

(1) Disconnect and isolate the battery negative cable.

POWER SEAT TRACK (Continued)

(2) Remove the appropriate seat from the vehicle and place it on a clean work surface, (Refer to 23 - BODY/SEATS/SEAT - REMOVAL).

(3) Remove the Memory Seat/Mirror Module (MSMM) mounting fasteners (if equipped).

(4) Disconnect the MSMM electrical harness connectors and remove the MSMM from the power seat track (if equipped).

(5) Remove the front seat track rear cover, (Refer to 23 - BODY/SEATS/SEAT TRACK REAR COVER - REMOVAL).

(6) Remove the seat side cover and power seat switch as an assembly (Refer to 23 - BODY/SEATS/SEAT CUSHION SIDE COVERS - REMOVAL).

(7) Disconnect all electrical connectors connecting the power seat track to the seat assembly.

(8) Pull the seat back trim cover up slightly to access and remove the two seat back frame mounting bolts and also remove two seat back recliner bolts.

(9) Remove four seat track mounting bolts from the seat cushion pan.

(10) Remove the power seat track from the seat.

INSTALLATION

(1) Position the seat cushion on the seat track.

(2) Install the four seat track retaining bolts in the seat cushion pan. Torque the bolts to 28.5 N·m (21 ft-lbs.).

(3) Position the seat back and install the two seat back frame mounting bolts and the two seat back recliner bolts. Torque the bolts to 55 N·m (40.5 ft-lbs.).

(4) Route and connect the electrical connectors between the power seat track and the seat assembly.

(5) Install the seat side cover and power seat switch as an assembly (Refer to 23 - BODY/SEATS/SEAT CUSHION SIDE COVERS - INSTALLATION).

(6) Install the front seat track rear cover, (Refer to 23 - BODY/SEATS/SEAT TRACK REAR COVER - INSTALLATION).

(7) Position the Memory Seat/Mirror Module (MSMM) and connect the MSMM electrical connectors (if equipped).

(8) Install the MSMM mounting fasteners (if equipped).

(9) Install the seat assembly in the vehicle (Refer to 23 - BODY/SEATS/SEAT - INSTALLATION).

(10) Connect the battery negative cable.

POWER SLIDING DOOR SYSTEM

TABLE OF CONTENTS

page

POWER SLIDING DOOR SYSTEM
DESCRIPTION 40
OPERATION 41
DIAGNOSIS AND TESTING
POWER SLIDING DOOR SYSTEM 42
STANDARD PROCEDURE
POWER SLIDING DOOR LEARN CYCLE 48
PUSH-PIN GROMMET REPLACEMENT 48
POWER SLIDING DOOR ADJUSTMENT 49
LATCH
DESCRIPTION 49
OPERATION 49
REMOVAL 49
INSTALLATION 50
SLIDING DOOR MOTOR
DESCRIPTION 51
OPERATION 51
REMOVAL 51
INSTALLATION 51
FULL OPEN SWITCH
DESCRIPTION 52
OPERATION 52
B-PILLAR SWITCH
DESCRIPTION 52

page

OPERATION 52
REMOVAL 52
INSTALLATION 52
LOWER DRIVE UNIT
DESCRIPTION 53
OPERATION 53
REMOVAL 53
INSTALLATION 54
FLEX DRIVE
DESCRIPTION 55
OPERATION 55
REMOVAL 55
INSTALLATION 56
LOWER DRIVE UNIT TRACK & RACK
DESCRIPTION 57
OPERATION 57
REMOVAL 57
INSTALLATION 58
WIRING HARNESS
DESCRIPTION 59
OPERATION 59
REMOVAL 59
INSTALLATION 59

POWER SLIDING DOOR SYSTEM

DESCRIPTION

Some vehicles are equipped with a power sliding door system. Vehicles may be equipped with only a right side power sliding door or a right and left side power sliding doors. The components of the power sliding door system are:

- Door motor assembly
- Latch assembly
- Sliding door control module
- Lower drive unit assembly
- Flex drive assembly
- Wire harness and track
- Lower drive unit track and rack assembly
- Full open switch
- B-pillar switch
- Overhead console switch
- Key fob switches (Fig. 1)
- Pawl switch
- Ratchet switch
- Child lockout and handle switches

Each power sliding door has its own door control module, located in the center of the door behind the door trim panel. (Refer to 8 - ELECTRICAL/ELECTRONIC CONTROL MODULES/DOOR CONTROL MODULE - DESCRIPTION) The power sliding door motor is located in the front portion of the door, on the inner door panel sheet metal. The latch assembly is located in the rear of the power sliding door, near the body line. The lower drive unit is attached to the lower door hinge. The flex drive assembly connects the door motor to the lower drive unit. The wire harness and track and the lower drive unit track are visible with the door open in the lower door sill area. The power sliding door full open switch is located under the lower drive unit and is part of the hold open latch assembly. The pawl, ratchet, handle and child lockout switches are all located on the power sliding door latch assembly. The B-pillar switch is an open and close command switch located on the interior B-pillar trim. The overhead console switch, is an open and close command switch located in the vehicle's overhead console.

Software technology has enabled the power sliding door control module to detect resistance to door

POWER SLIDING DOOR SYSTEM (Continued)

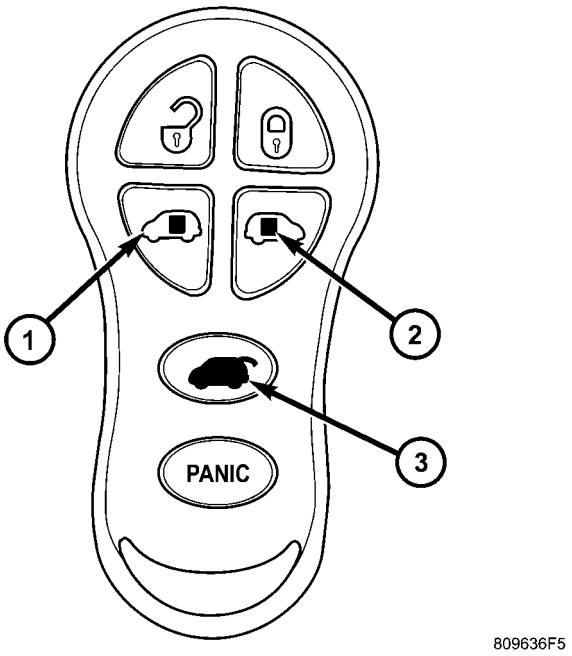

Fig. 1 KEY FOB

1 - LEFT SLIDING DOOR SWITCH
2 - RIGHT SLIDING DOOR SWITCH
3 - LIFTGATE SWITCH

travel. This allows the power sliding door to stop and reverse direction any time an obstruction is felt or any of the command switches are operated (while closing only). Battery voltage is supplied to the power sliding door system through a 40 amp fuse, located in the Integrated Power Module (IPM) assembly. The child lockout switch prevents children from opening or actuating the power sliding door system when desired. In the unlikely event that the power sliding door system develops a fault, the power sliding door can still be operated manually from the interior or exterior door handle, just like a standard manual sliding door.

The power sliding door control module communicates on the Programmable Communication Interface (PCI) Data Bus Circuit. Therefore, the power sliding door control module can generate and store its own Diagnostic Trouble Codes (DTC). A diagnostic scan tool, such as the DRB III® is used to read and diagnose these trouble codes.

NOTE: It may be possible to generate Sliding Door Diagnostic Trouble Codes during normal power sliding door operation. Refer to the Body Diagnostic Manual for a complete list of diagnostic routines.

For additional information, (Refer to 8 - ELECTRICAL/POWER DOORS - OPERATION). Refer to the appropriate wiring information for complete circuit schematic or connector pin-out information.

WARNING: BE CERTAIN TO READ ALL WARNINGS AND CAUTIONS IN POWER SLIDING DOOR OPERATION BEFORE ATTEMPTING ANY SERVICE OF THE POWER SLIDING DOOR SYSTEM OR COMPONENTS.

OPERATION

With the push of a power sliding door open/close command switch (key fob, overhead console or B-pillar mounted) a signal is sent out to the Body Control Module (BCM). The BCM then sends a signal out on the Programmable Communication Interface (PCI) Data Bus circuit to the power sliding door module. The power sliding door module then signals the power sliding door latch to release the door to the unlatched and movable position. The motor then starts an open cycle.

During the door cycle, if the power sliding door module detects sufficient resistance to door travel, such as an obstruction in the door's path, the power sliding door module will immediately stop door movement and reverse door travel to the full open or closed position. The ability for the power sliding door module to detect resistance to door travel is accomplished by hall effect sensors detecting the door motor speed.

The power sliding door control module has the ability to learn. Anytime a door is opened or closed using the power sliding door system the module learns from its cycle. If a replacement power sliding door component is installed or a door adjustment is made, the module must re-learn the effort required to open or close the door. A learn cycle can be performed with a complete cycle of the door, using any one of the command switches or with the DRB III®, or equivalent scan tool. (Refer to 8 - ELECTRICAL/POWER DOORS - STANDARD PROCEDURE - LEARN CYCLE) for detailed instructions.

The power sliding door system is designed with a number of system inhibitors. These inhibitors are necessary for safety and/or feasibility of the power sliding door system. The power sliding door system inhibitors are:

- The power sliding door must be in the **full** open or closed position in order for the power sliding door system to start a cycle. If the door is not in this position (based on the input from the full open, pawl or ratchet switches) the door control module will not respond to command switch inputs.
- The transmission must be in **park or neutral** in order for the power sliding door system to start a cycle.
- The child lockout switch must be in the "UNLOCKED" position in order for the power sliding door systems B-pillar switches to function.

- If multiple obstacles are detected during the same power open or close cycle the power sliding door may go into full manual mode.
- If severe Diagnostic Trouble Codes (DTC) are stored in the power sliding door control module the power sliding door may go into full manual mode.
- Due to the high pressure created in the passenger compartment with the blower motor on high, the power sliding door may not complete a power close cycle unless a window is cracked, allowing the pressure to escape. This situation will only be experienced on some vehicles, or vehicles with brand new side door weather seals installed.
- The fuel tank filler door must be in the closed position. Due to the sliding door interference with the open fuel tank filler door, a mechanical linkage prevents the side door from opening and striking the fuel door. Refer to the Body section of this manual for detailed information on the fuel door lockout feature.

POWER SLIDING DOOR SYSTEM WARNINGS

WARNING: ALWAYS DISCONNECT THE NEGATIVE BATTERY CABLE BEFORE ATTEMPTING ANY POWER SLIDING DOOR SYSTEM SERVICE.

WARNING: EXTREME CARE MUST BE TAKEN TO PREVENT OBJECTS FROM ENTERING THE DOORS PATH ONCE THE DOOR REACHES THE CINCH MOTOR CONTACT (APPROXIMATELY 1 INCH BEFORE FULLY CLOSED). NEVER PLACE OBJECTS IN THE POWER SLIDING DOOR WHEN CINCHING CLOSED. THE OBSTACLE DETECTION FUNCTION IS INOPERATIVE DURING THE CINCH PHASE AND DAMAGE TO THE VEHICLE, POWER SLIDING DOOR SYSTEM OR COMPONENTS AND/OR PERSONAL INJURY MAY OCCUR.

WARNING: NEVER ATTEMPT TO ENTER OR EXIT THE VEHICLE WHILE THE POWER SLIDING DOOR IS IN MOTION. YOU COULD DAMAGE THE POWER SLIDING DOOR SYSTEM OR COMPONENTS AND/OR CAUSE PERSONAL INJURY.

WARNING: NEVER ATTEMPT TO DRIVE AWAY WITH THE POWER SLIDING DOOR IN MOTION. YOU COULD DAMAGE THE POWER SLIDING DOOR SYSTEM OR COMPONENTS AND/OR CAUSE PERSONAL INJURY.

DIAGNOSIS AND TESTING

POWER SLIDING DOOR SYSTEM

The power sliding door system contains many components and modules. In order to obtain conclusive testing, the Programmable Communications Interface (PCI) data bus network and all of the electronic modules that provide inputs to, or receive outputs from the power sliding door system must be checked.

The power sliding door system was designed to be diagnosed with an appropriate diagnostic scan tool, such as the DRB III®. The most reliable, efficient, and accurate means to diagnose the power sliding door system requires the use of a DRB III® scan tool and the proper Body Diagnostic Procedures manual. The DRB III® can be used to observe various switch statuses throughout the power sliding door system to help the technician diagnose a defective switch or component. The DRB III® can also be used to actuate various components throughout the power sliding door system to help the technician diagnose a defective component.

Before any testing of the power sliding door system is attempted, the battery should be fully charged, all built-in power sliding door system inhibitors read and understood (Refer to 8 - ELECTRICAL/POWER DOORS - OPERATION) and all wire harness and ground connections inspected around the affected areas on the vehicle.

The following are quick reference diagnostic tables to help when diagnosing and testing the power sliding door system.

POWER SLIDING DOOR SYSTEM (Continued)

POWER SLIDING DOOR SYSTEM DIAGNOSIS

CONDITION	POSSIBLE CAUSES	CORRECTION
Door opens unexpectedly	Inoperative sliding door control module or Body Control Module (BCM)	Disconnect then reconnect battery negative cable to reset module. Cycle door, if no function exists check for loose wire connections, Refer to the Body Diagnostic Manual for detailed procedures
	Inoperative latch assembly	Check wiring/cable connections
		Check for trouble codes, replace latch if necessary
	Inoperative open/close command switch	Check for shorted or defective switch
	Inoperative striker	Striker misaligned or loose
		Striker damaged Replace striker if necessary
Door will not open manually using inside handle	The child lock out switch is in the ″LOCKED″ position	Ensure the child lock out switch is in the ″UNLOCKED″ position
	Inoperative inside handle assembly	
	Check for broken inside handle assembly	
	Check cable connections at latch and handle assembly.	
		Check for binds or kinks in cable.
		Check for foreign matter preventing the operation of handle assembly Replace the handle if necessary
	Inoperative latch assembly	Check cable connections
		Check for foreign matter preventing the operation of latch assembly Replace latch if necessary
	Inoperative inside handle cable assembly	Check cable for binding
		Check cable for broken condition Replace the cable, if necessary
	Binding or sticking of components	Check for foreign matter preventing the operation of door
		Establish location of binding Replace necessary components
Door will not open manually using outside handle	Inoperative outside handle assembly	Check for broken outside handle assembly
		Check cable connections at latch and handle assembly.
		Check for binds or kinks in cable.

POWER SLIDING DOOR SYSTEM (Continued)

CONDITION	POSSIBLE CAUSES	CORRECTION
		Check for foreign matter preventing the operation of handle assembly Replace the handle if necessary
	Inoperative latch assembly	Check cable connections Check for foreign matter preventing the operation of latch assembly Replace latch assembly, if necessary
	Inoperative outside handle cable assembly	Check cable for binding Check cable for broken condition Replace the cable, if necessary
	Binding or sticking of components	Check for foreign matter preventing the operation of door Establish location of binding Replace necessary components
Sliding door will not open/close manually	Binding or sticking of components	Establish location of binding. Disconnect flex drive and recheck. Replace necessary components
	Inoperative latch assembly	Check cable connections Check for foreign matter preventing the operation of latch assembly Replace latch assembly, if necessary
Sliding door will not open/close under power	Binding or sticking of components	Open and close door manually to assess binding or high effort to move door. Establish location of binding and replace necessary components
	Inoperative sliding door control module or BCM	Disconnect then reconnect battery negative cable to reset module. Cycle door, if no function exists check for loose wire connections, see Body Diagnostic Manual for detailed procedures
	Inoperative latch assembly	Check for blown fuse and wire connections Check cable connections Check for foreign matter preventing the operation of latch assembly Troubleshoot using body diagnostic manual Replace latch assembly, if necessary
	Inoperative motor assembly	Troubleshoot using body diagnostic manual
	Inoperative full open switch assembly	Troubleshoot using body diagnostic manual
	Inoperative flex drive assembly	Disconnect flex drive and check for broken condition
	Inoperative lower drive unit assembly	Remove lower drive unit and check for broken condition

POWER SLIDING DOOR SYSTEM (Continued)

CONDITION	POSSIBLE CAUSES	CORRECTION
	Wiring problems (system or vehicle)	Troubleshoot using the appropriate wiring information
Power loss during power door operation	Wiring problems (system or vehicle)	Troubleshoot using the appropriate wiring information
	Low battery voltage	Charge battery
	Inoperative sliding door control module or BCM	Disconnect then reconnect battery negative cable to reset module. Cycle door, if no function exists check for loose wire connections, see Body Diagnostic Manual for detailed procedures
	Inoperative drive assembly	Remove lower drive unit and check for no drive condition
No latching in primary and/or secondary positions	Inoperative inside/outside handle assembly	Go to that ″POSSIBLE CAUSE″ and review ″CORRECTIONS″
	Inoperative latch assembly	Check wire connections and for blown fuse
		Check cable connections Check for foreign matter preventing the operation of latch assembly Troubleshoot using body diagnostic manual Replace latch assembly, if necessary
	Binding or sticking of components	Establish location of binding and replace necessary components
	Inoperative sliding door control module or BCM	Disconnect then reconnect battery negative cable to reset module. Cycle door, if no function exists check for loose wire connections, see Body Diagnostic Manual for detailed procedures
	Door seal force too high	Inspect seals for damage, mis-assembly, foreign matter. (Refer to 8 - ELECTRICAL/ POWER DOORS - STANDARD PROCEDURE) for door adjustment procedure and specifications in the Body section of the service manual for specifications
	Inoperative drive assembly	Remove lower drive unit and check for no drive condition
	Inoperative striker	Striker misaligned or loose
		Striker damaged Replace striker if necessary
Latch will not fully release from primary position	Inoperative latch assembly	Check wire connections and for blown fuse
		Check cable connections Check for foreign matter preventing the operation of latch assembly Troubleshoot using body diagnostic manual Replace latch assembly, if necessary

POWER SLIDING DOOR SYSTEM (Continued)

CONDITION	POSSIBLE CAUSES	CORRECTION
	Inoperative fuel filler door lockout mechanism	Check operation of fuel filler door lockout mechanism.
	Inoperative sliding door control module or BCM	Disconnect then reconnect battery negative cable to reset module. Cycle door, if no function exists check for loose wire connections, see Body Diagnostic Manual for detailed procedures
	Inoperative striker	Striker misaligned or loose
		Striker damaged Replace striker if necessary
	Cables worn and stretched	Replace cables as necessary
	Binding or sticking of components	Establish location of binding and replace necessary components
Key fob, B-pillar or overhead console switch does not operate power sliding door	Blown Fuse	Check fuse and replace
	Battery voltage low	Charge or replace battery
	Inoperative latch assembly	Check for foreign matter preventing the operation of latch assembly
		Check wire connection Pawl and/or ratchet switch inoperative Replace latch if necessary
	Wiring problems (system or vehicle)	Troubleshoot using the appropriate wiring information
	Inoperative BCM	Check electrical connections
		Refer to the body diagnostic manual for additional checks Replace BCM if necessary
	Inoperative key fob	Verify inoperative key fob by trying other key fob functions
		Replace key fob battery Reprogram key fob Replace key fob if necessary
	Inoperative sliding door control module	Disconnect then reconnect battery negative cable to reset module. Cycle door, if no function exists check for loose wire connections, see Body Diagnostic Manual for detailed procedures
	Inoperative door motor assembly	Check for foreign matter preventing the operation of gear motor assembly
		Check wire connections Gear motor clutch does not engage, replace assembly

POWER SLIDING DOOR SYSTEM (Continued)

CONDITION	POSSIBLE CAUSES	CORRECTION
		Full open switch inoperative, replace hold open latch assembly
		Replace motor assembly. if necessary
Door does not stay open	Inoperative hold open latch assembly	Check wire/cable connections
		Replace hold open latch, if necessary
	Inoperative hold open latch striker	Replace hold open latch striker, if necessary
High inside/outside opening effort	Inoperative latch assembly	Check wire connections and for blown fuse
		Check cable connections
		Check for foreign matter preventing the operation of latch assembly
		Troubleshoot using body diagnostic manual
		Replace latch assembly, if necessary
	Inoperative inside/outside handle assembly	Go to that ″POSSIBLE CAUSE″ and review ″CORRECTIONS″
	Binding or sticking of components	Establish location of binding and replace necessary components
Door continues to cinch closed during power mode	Inoperative latch assembly	Check wire connections and for blown fuse
		Check for foreign matter preventing the operation of latch assembly
		Troubleshoot using body diagnostic manual
		Replace latch assembly, if necessary
	Inoperative sliding door control module or BCM	Disconnect then reconnect battery negative cable to reset module. Cycle door, if no function exists check for loose wire connections, see Body Diagnostic Manual for detailed procedures
	Wiring problems (system or vehicle)	Troubleshoot using the appropriate wiring information
Door continues to open during power mode (runaway motor)	Inoperative sliding door control module or BCM	Disconnect then reconnect battery negative cable to reset module. Cycle door, if no function exists check for loose wire connections, see Body Diagnostic Manual for detailed procedures
	Inoperative hold open latch assembly	Check wire/cable connections
		Replace hold open latch, if necessary
	Inoperative drive assembly	Remove lower drive unit and check for no drive condition
	Wiring problems (system or vehicle)	Troubleshoot using electrical schematics. Refer to wiring diagrams
Door opens very slowly	Inoperative door motor assembly	Check wire/cable connections
		Replace motor assembly, if necessary

POWER SLIDING DOOR SYSTEM (Continued)

CONDITION	POSSIBLE CAUSES	CORRECTION
	Binding or sticking of components	Establish location of binding and replace necessary components
Squeaks, Noises and rattles	Foreign material in door compartment	Remove foreign material
	Loose components	Check and tighten loose components
	Missing stabilizers, bumpers or anti-rattle components	Check to ensure components are present. Replace as necessary
	Misadjusted stabilizers, bumpers or anti-rattle components	Adjust components as necessary
	Poor door track lubrication	Lubricate the front portions of the side door tracks with ″Door Ease®″ or equivalent

STANDARD PROCEDURE

POWER SLIDING DOOR LEARN CYCLE

Any time a power sliding door component is removed, replaced, door adjustment is performed or diagnostic trouble codes are addressed and erased, a learn cycle **must** be performed. This learn cycle enables the power sliding door control module to learn or relearn its critical information (travel limits, resistance to door travel, etc.) which allows it to perform properly and safely. To perform a power sliding door learn cycle do the following:

(1) Obtain a DRB III®, or equivalent scan tool.

Connect the scan tool to the vehicle and check for any power sliding door system stored diagnostic trouble codes, erase any stored codes. Operate the system and check to see if any trouble codes return. If any diagnostic trouble codes return, diagnose, correct and erase the codes before performing the learn cycle. If a DRB III®, or equivalent scan tool is not available, the learn cycle can be performed by opening and closing the power sliding door using any of the normal open/close command switches. Be certain to cycle the power sliding door through a complete open **and** close cycle or the procedure will not be complete.

(2) Using the scan tool, Go into Test Routine Menu and select a power open command.

(3) Select a power close command.

(4) The power side door learn cycle is complete.

NOTE: If the power sliding door will not complete a full cycle, a problem exists with the power sliding door system. (Refer to 8 - ELECTRICAL/POWER DOORS - DIAGNOSIS AND TESTING) for additional information.

PUSH-PIN GROMMET REPLACEMENT

Push-pin grommets are used to hold and isolate the power sliding door motor to and from the door inner panel. This secures the door motor assembly to the inner panel and keeps the audible motor vibrations to a minimum. If a push-pin grommet shows signs of wear, it must be replaced. Follow the procedure below if replacement is necessary.

(1) Remove the door motor from the door inner panel. (Refer to 8 - ELECTRICAL/POWER DOORS/MOTOR - REMOVAL).

(2) Using a trim panel tool (special tool #C-4755) or equivalent, remove the push-pin grommets from the inner panel by pulling them straight out (Fig. 2).

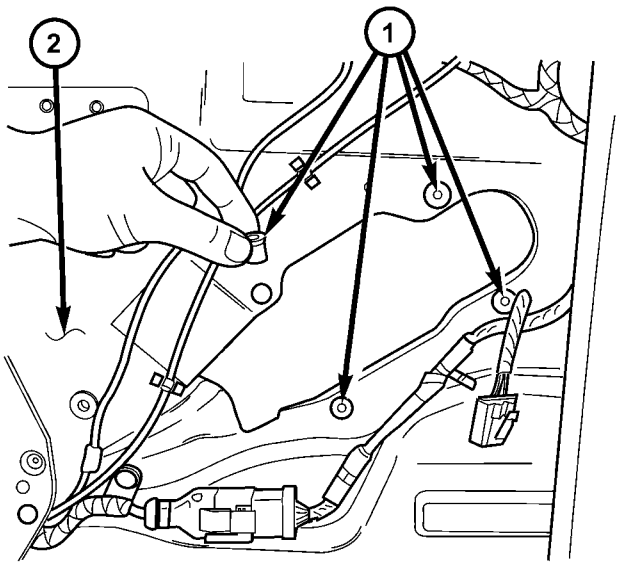

Fig. 2 SIDE DOOR MOTOR PUSH-PIN GROMMETS

1 - PUSH-PIN GROMMETS
2 - SIDE DOOR INNER PANEL

(3) Install the replacement push-pin grommets in the inner panel and install the door motor(Refer to 8 - ELECTRICAL/POWER DOORS/MOTOR - INSTALLATION).

POWER SLIDING DOOR SYSTEM (Continued)

POWER SLIDING DOOR ADJUSTMENT

In order for the power sliding door system to function properly the door must move freely and smoothly. The power sliding door system can accommodate for some minor changes in the effort required to move the door. However, in extreme conditions the door may need to be mechanically adjusted for proper fit. (Refer to 23 - BODY/DOORS - SLIDING/SLIDING DOOR - ADJUSTMENTS).

If a problem exists with the power sliding door and it is suspected to be extreme effort, check for proper door alignment and adjustment first, then check the door tracks and drive unit for free manual operation. (Refer to 23 - BODY/DOORS - SLIDING/SLIDING DOOR - ADJUSTMENTS) for detailed instructions.

LATCH

DESCRIPTION

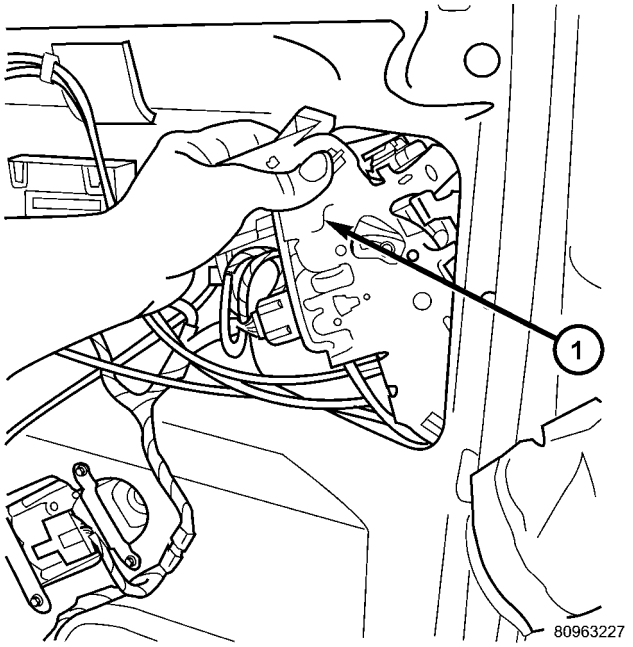

Fig. 3 REMOVING/INSTALLING POWER LATCH IN SLIDING DOOR

1 - POWER LATCH ASSEMBLY

One power latch is used for each power sliding door. The latch is located on the trailing edge of the sliding door assembly (Fig. 3). This power latch assembly is comprised of many different components which have the ability to perform the power cinch, release, lock, unlock and safety related operations. These components are the door latch, lock/unlock actuator, cinch/release actuator and child lockout, pawl, ratchet and handle switches. The pawl and ratchet switches are used to indicate the primary and secondary latched positions. The cinch latch also provides a connection point for the interior handle, exterior handle and hold open latch cables. If any of the components of the latch assembly are inoperative the complete power latch assembly must be replaced.

OPERATION

The power latch performs the same operation as a full manual door latch as well as power cinch, release, lock and unlock operations. The power latch mounted actuator cinches the door closed and latches it in its primary latched position. During a power close cycle, the power cinch actuator will not operate until the power sliding door has reached its secondary latch position (determined by pawl and ratchet switches). During a power open cycle, the power release actuator will stop once the sliding door has moved from the primary latch position.

The power latch uses inputs from the lock/unlock actuator, power sliding door control module and child lockout, pawl, ratchet and handle switches to provide safe power cinch and release operations. (Refer to 8 - ELECTRICAL/POWER DOORS - OPERATION) for additional information.

REMOVAL

(1) Disconnect and isolate the battery negative cable.

(2) Remove the appropriate side door trim panel, (Refer to 23 - BODY/DOORS - SLIDING/TRIM PANEL - REMOVAL).

(3) Remove the weather shield if necessary.

(4) Open the side door all the way and remove the door latch retaining bolts (Fig. 4).

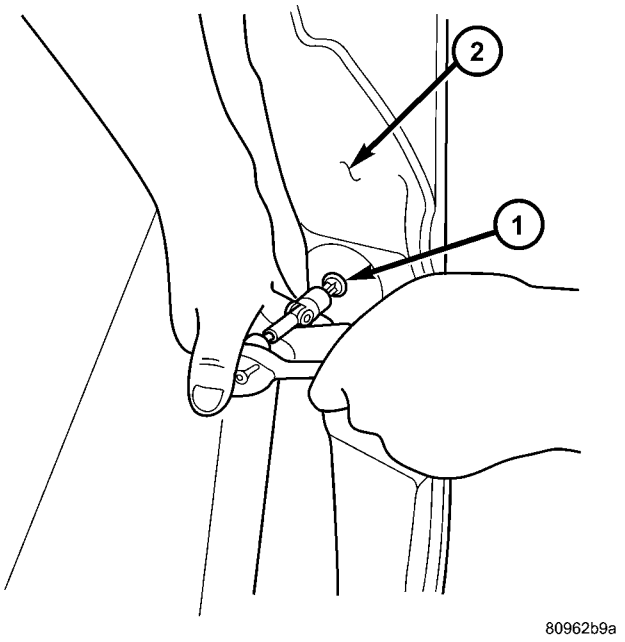

Fig. 4 REMOVING LATCH RETAINING BOLTS

1 - LATCH RETAINING BOLTS
2 - SIDE DOOR

LATCH (Continued)

(5) Partially close the door and pull the latch assembly out of the side door inner panel, (Fig. 5).

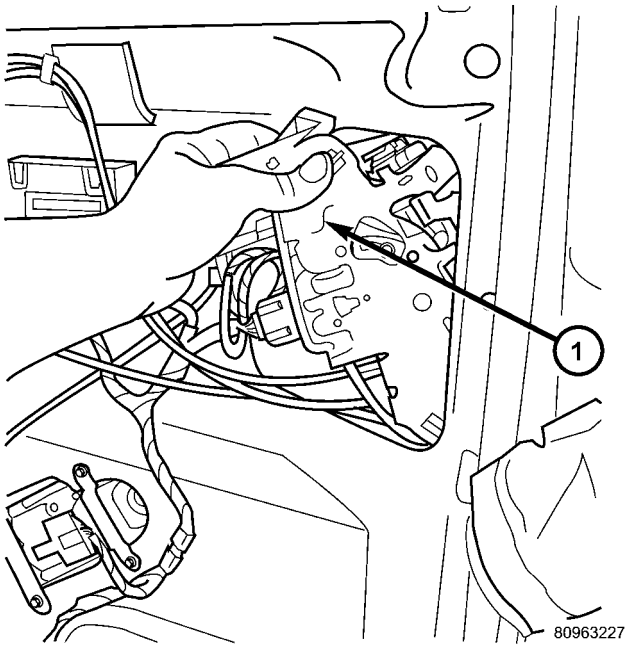

Fig. 5 POWER LATCH POSITION & ORIENTATION

1 - POWER LATCH ASSEMBLY

(6) Disconnect all electrical connectors leading to the latch assembly.

(7) Disconnect the inside and outside handle cables from the latch assembly.

(8) Disconnect the hold open latch cable from the latch assembly.

(9) Disconnect lock actuator link rod from the latch assembly.

(10) Remove the latch assembly from the vehicle.

INSTALLATION

(1) Position the latch assembly in the vehicle. Be certain all latch mounted components are installed on the replacement latch assembly. If not, transfer components from the old latch to the new latch assembly, (Fig. 6).

(2) Connect the lock actuator link rod on the latch assembly.

(3) Connect the hold open latch cable on the latch assembly.

(4) Connect the inside and outside handle cables on the latch assembly.

(5) Connect all electrical connectors leading to the latch assembly.

(6) With assistance from another person, position the side door and install the door latch retaining bolts, (Fig. 7). Torque to 10 - 12 N·m (100 in. lbs.).

(7) Install the weathershield if necessary.

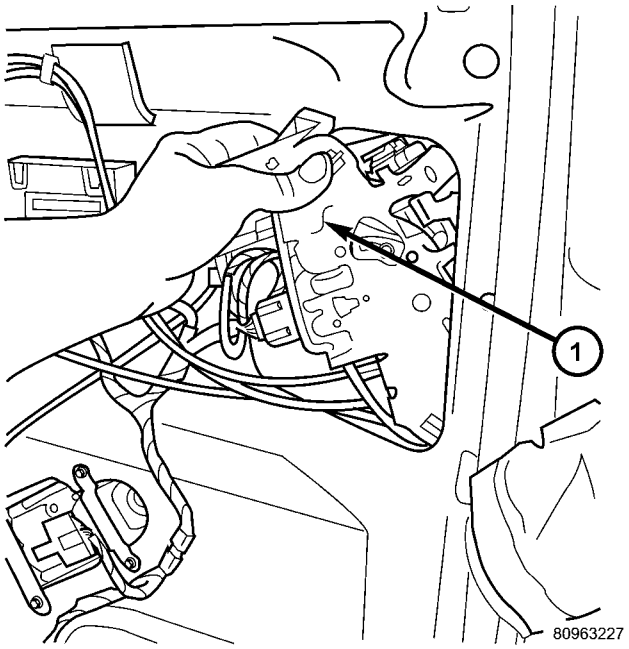

Fig. 6 POWER LATCH POSITION & ORIENTATION

1 - POWER LATCH ASSEMBLY

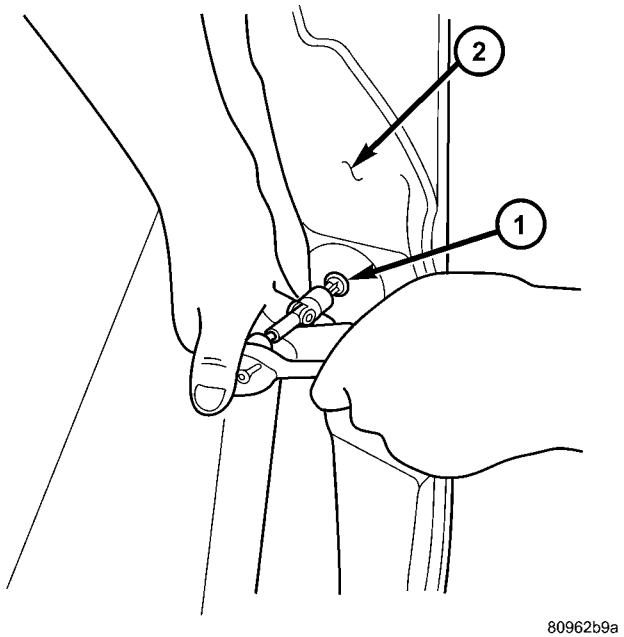

Fig. 7 REMOVING LATCH RETAINING BOLTS

1 - LATCH RETAINING BOLTS
2 - SIDE DOOR

(8) Install the appropriate side door trim panel, (Refer to 23 - BODY/DOORS - SLIDING/TRIM PANEL - INSTALLATION) for detailed instructions.

(9) Connect the negative battery cable.

SLIDING DOOR MOTOR

DESCRIPTION

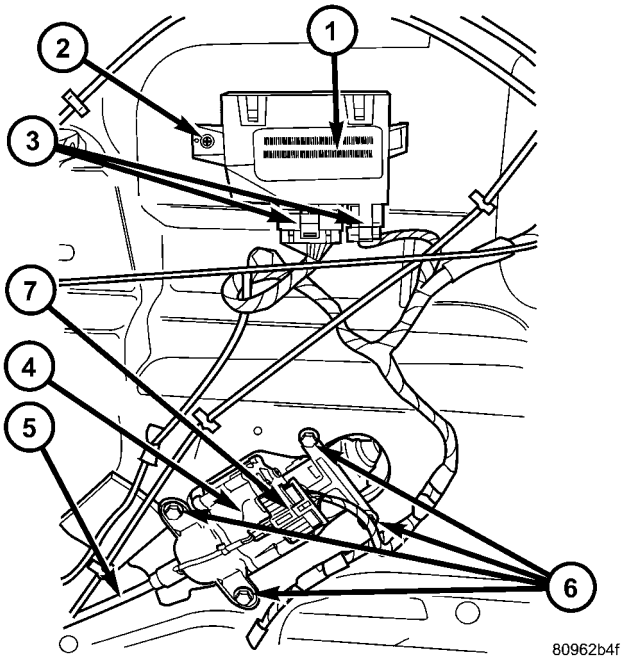

Fig. 8 POWER SLIDING DOOR COMPONENTS

1 - POWER SLIDING DOOR CONTROL MODULE
2 - MODULE RETAINING SCREW
3 - MODULE ELECTRICAL CONNECTORS
4 - DOOR MOTOR ASSEMBLY
5 - FLEX DRIVE ASSEMBLY
6 - DOOR MOTOR RETAINING FASTENERS
7 - DOOR MOTOR ELECTRICAL CONNECTOR

The door motor is located in the center of the power sliding door (Fig. 8) and is comprised of three parts. The three parts of the door motor assembly are the motor, gear reduction and clutch assembly. The door motor assembly provides the power and torque to move the sliding door from the open/closed position to full closed/open position, after the power latching mechanism has released.

The door motor is replaced as a complete assembly, which includes the DC motor, gear reduction and clutch assemblies.

OPERATION

With the push of a power sliding door command switch, the power sliding door control module will signal the latch assembly to release the door from its primary locked position. The door motor will then take over to provide the power to open the door to its full open or closed position. The gear reduction portion of the motor assembly reduces the speed of the motor from 5800 to 260 rpm and also increases the torque to the lower drive unit. The clutch portion of the motor assembly engages the motor to drive the door under power and disengages it so the door can be moved easily under manual operation.

REMOVAL

(1) Disconnect and isolate the battery negative cable.

(2) Remove the door trim panel from the appropriate door, (Refer to 23 - BODY/DOORS - SLIDING/ TRIM PANEL - REMOVAL).

(3) Remove the water shield as necessary to gain access to motor assembly.

(4) Remove retaining clip holding flex drive assembly to the motor (Fig. 9). Pull flex drive cable straight out of the motor assembly.

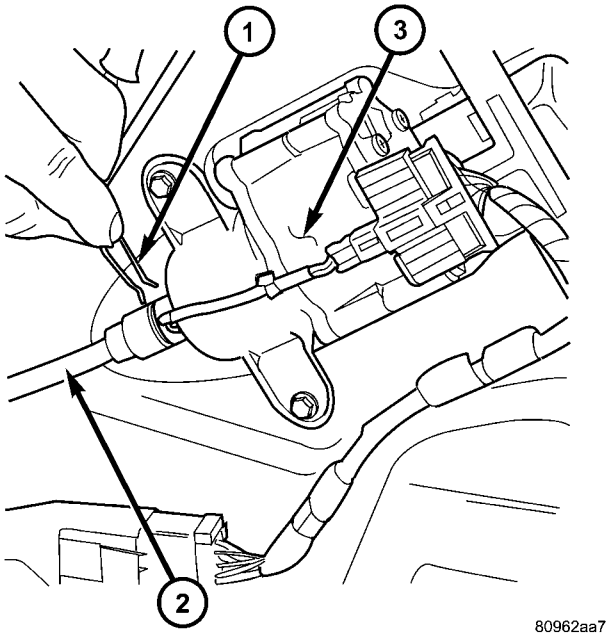

Fig. 9 FLEX DRIVE RETAINING CLIP

1 - FLEX DRIVE CABLE RETAINING CLIP
2 - FLEX DRIVE CABLE
3 - DOOR MOTOR ASSEMBLY

(5) Disconnect door motor electrical connector.

(6) Using a trim stick (special tool #C-4755) or equivalent, gently pry out push-pin fasteners retaining the door motor.

(7) Remove the door motor assembly from the vehicle.

INSTALLATION

(1) Position the door motor assembly on the door inner panel.

(2) Install the push-pin fasteners retaining the motor assembly to the power sliding door.

SLIDING DOOR MOTOR (Continued)

NOTE: Push in on the push-pins at the clutch housing (plastic side) until you hear one click. Push in on the push-pin fasteners at the motor mount (sheet metal side) until you hear two clicks. This assures proper installation/attachment of the motor to the sliding door.

(3) Install the flex shaft by lining up the square shaped drive shaft with the corresponding hole in the door motor drive unit and push straight in.
(4) Install the E-clip to secure flex-shaft.
(5) Install the weather shield as necessary.
(6) Install the door trim panel on the sliding door, (Refer to 23 - BODY/DOORS - SLIDING/TRIM PANEL - INSTALLATION) for the procedure.
(7) Connect the battery negative cable.

FULL OPEN SWITCH

DESCRIPTION

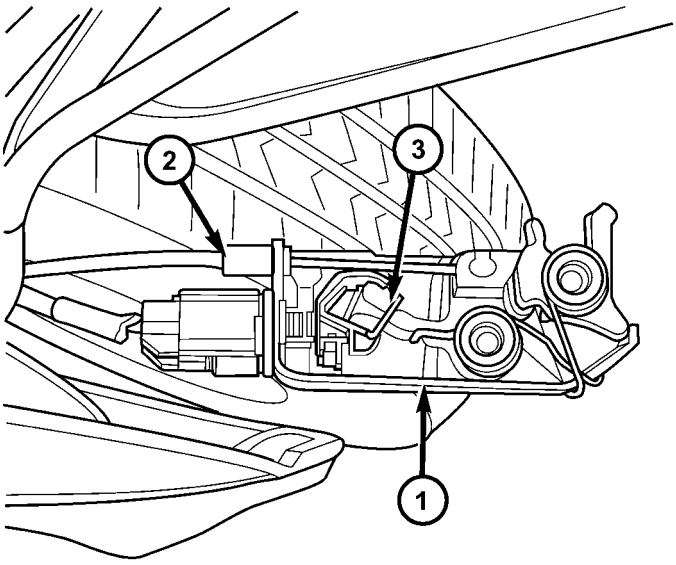

Fig. 10 FULL OPEN SWITCH POSITION & ORIENTATION

1 - HOLD OPEN LATCH ASSEMBLY
2 - HOLD OPEN LATCH CABLE
3 - FULL OPEN SWITCH

The full open switch is located in the hold open latch (Fig. 10) under the sliding door lower hinge. When the power sliding door control module receives a ground signal input from the full open switch, and as long as the cinching latch actuator is not in power mode or the handle switch is open, the signal indicates that the door is at the full open position.

The full open switch is incorporated into the hold open latch. If the full open switch is inoperative, the entire hold open latch assembly must be replaced.

OPERATION

The full open switch is triggered by a pawl lever in the hold open latch. When the full open switch is closed (circuit to ground) the ratchet has engaged on the hold open striker and the pawl lever has engaged on the ratchet, locking the latch from opening and holding the door in the full open position.

B-PILLAR SWITCH

DESCRIPTION

The B-pillar switches are located on the interior of the vehicle, on the B-pillar trim panels. These switches serve as an open and close command switch for the appropriate power sliding door.

OPERATION

When the B-pillar switch is depressed a signal is sent to the Body Control Module (BCM), this signal is then sent to the power sliding door control module, telling it to start a power open or close cycle. The child lockout feature must be disabled and the sliding door must be unlocked in order for the B-pillar switch to function.

REMOVAL

(1) Disconnect and isolate the battery negative cable.
(2) Using a trim stick (special tool # C-4755) or equivalent, gently pry the leading upper edge of the B-pillar switch away from the B-pillar trim.
(3) Once the upper edge is free from B-pillar trim, rock the switch out of the switch opening.
(4) Disconnect the B-pillar switch electrical connector. First, slide the connector lock away from the switch then, depress connector retaining tab while pulling straight apart.
(5) Remove the B-pillar switch from the vehicle.

INSTALLATION

(1) Connect the B-pillar switch electrical connector. Slide connector lock toward the switch to lock in place.
(2) Hook the lower edge of the B-pillar switch on the B-pillar trim and then push the switch firmly into position.
(3) Connect the battery negative cable.

LOWER DRIVE UNIT

DESCRIPTION

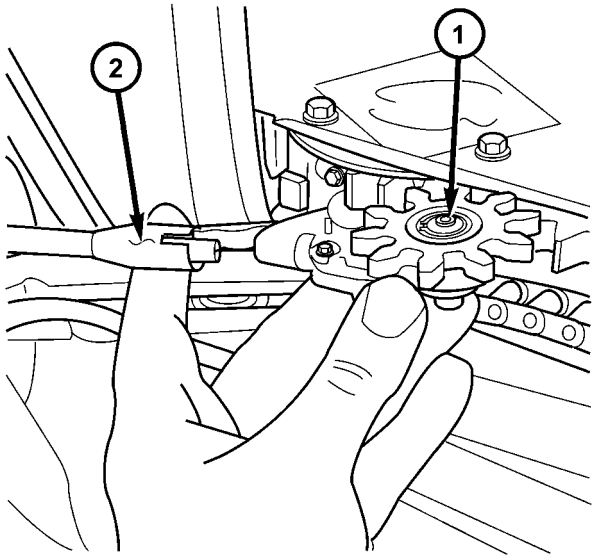

Fig. 11 LOWER DRIVE UNIT

1 - LOWER DRIVE UNIT
2 - FLEX DRIVE ASSEMBLY

The lower drive unit is located on the power sliding door lower hinge assembly (Fig. 11). This drive unit is used to transfer the rotation of the flex drive assembly into longitudinal movement via the drive unit gear and door track rack teeth (Fig. 11).

OPERATION

During a power open or close cycle, the power drive unit is driven by the flex drive assembly. The lower drive units main gear engages the lower door tracks rack teeth, this moves the power sliding door assembly accordingly.

REMOVAL

(1) Disconnect and isolate the battery negative cable.

(2) Open the appropriate sliding door and remove the lower drive unit cover retaining screws (Fig. 12).

(3) Remove the lower drive unit retaining fasteners (Fig. 13).

(4) Disconnect the flex drive assembly from the lower drive unit. Expand the flex drive collar until the lower drive unit can be pulled straight off.

(5) Remove the lower drive unit from the vehicle.

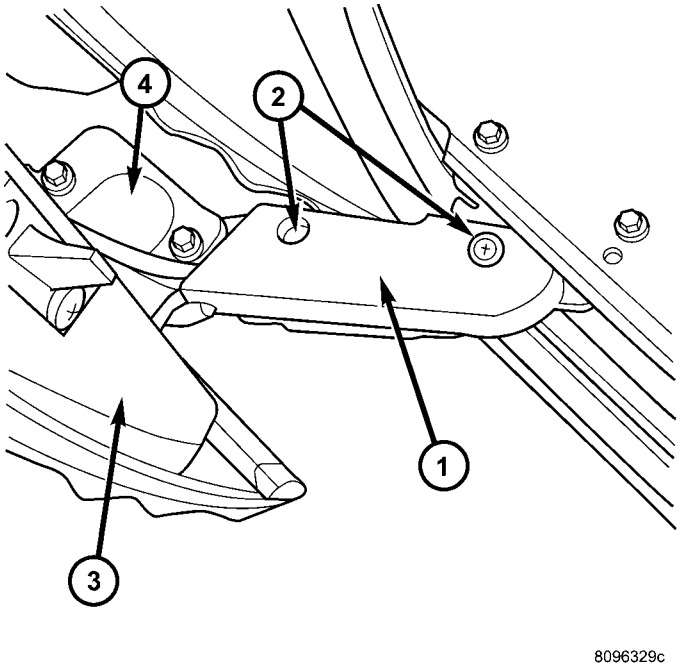

Fig. 12 SLIDING DOOR LOWER HINGE ASSEMBLY

1 - LOWER DRIVE UNIT COVER
2 - LOWER DRIVE UNIT COVER RETAINING SCREWS
3 - SLIDING DOOR
4 - LOWER HINGE ARM BRACKET

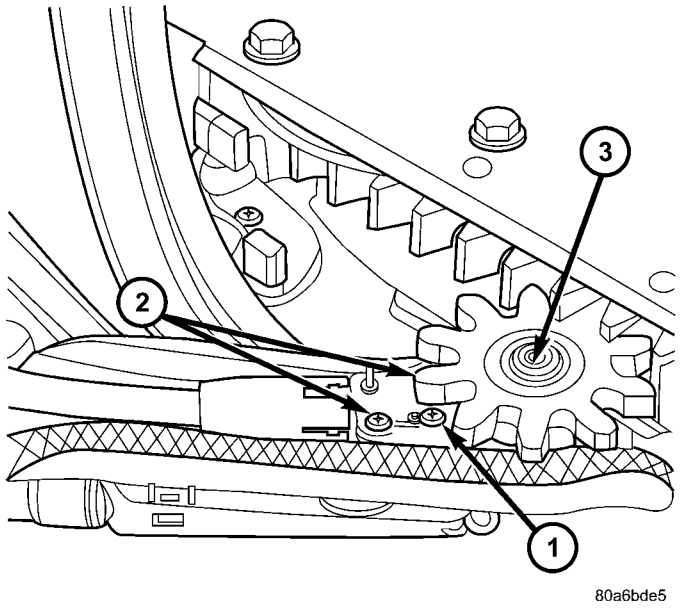

Fig. 13 LOWER DRIVE UNIT RETAINING FASTENERS

1 - LOWER DRIVE UNIT RETAINING SCREW
2 - DO NOT REMOVE
3 - LOWER DRIVE UNIT RETAINING BOLT

LOWER DRIVE UNIT (Continued)

INSTALLATION

(1) Position the lower drive unit near the lower hinge.

(2) Connect the flex drive assembly on the lower drive unit. Push the flex drive collar straight on until the it snaps in place (Fig. 14). **It may be necessary to rotate the drive unit slightly until the flex drive seats in place.**

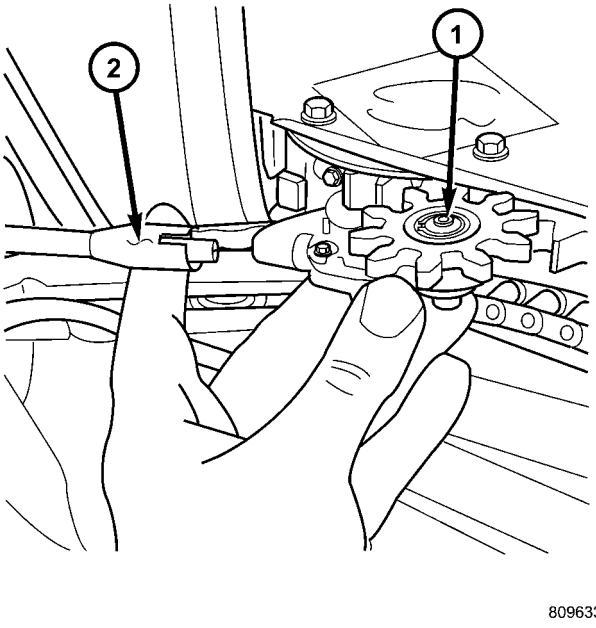

Fig. 14 LOWER DRIVE UNIT

1 - LOWER DRIVE UNIT
2 - FLEX DRIVE ASSEMBLY

(3) Install the lower drive unit retaining fasteners (Fig. 15). Torque the larger allen headed center stud to 9 N·m (80 in. lbs.). Torque the smaller screw to 3 N·m (28 in. lbs.).

(4) Install the lower drive unit cover and retaining screws (Fig. 16).

(5) Connect the battery negative cable.

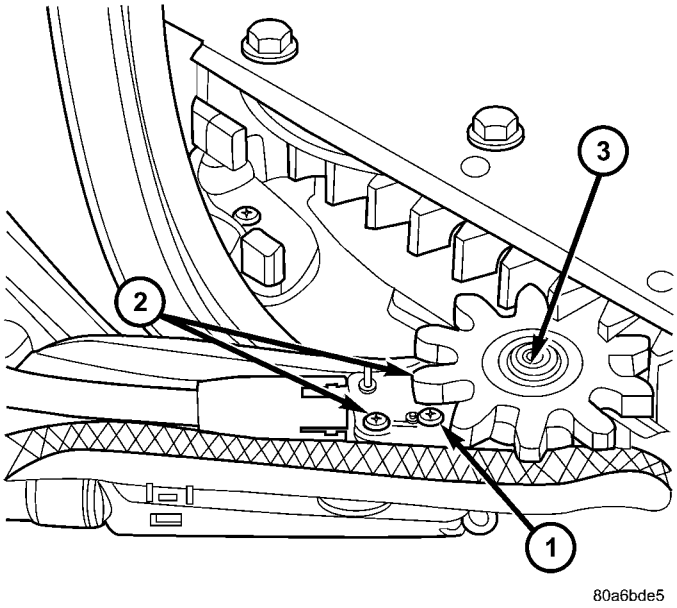

Fig. 15 LOWER DRIVE UNIT RETAINING FASTENERS

1 - LOWER DRIVE UNIT RETAINING SCREW
2 - DO NOT REMOVE
3 - LOWER DRIVE UNIT RETAINING BOLT

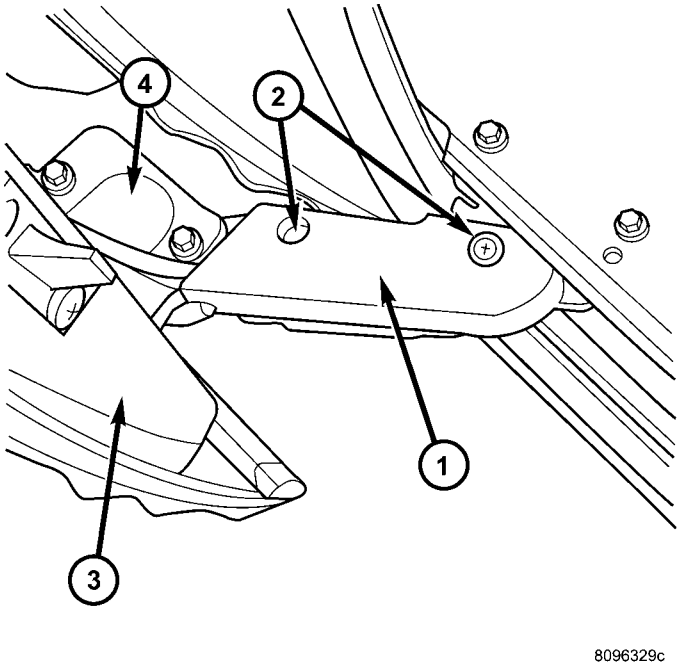

Fig. 16 SLIDING DOOR LOWER HINGE ASSEMBLY

1 - LOWER DRIVE UNIT COVER
2 - LOWER DRIVE UNIT COVER RETAINING SCREWS
3 - SLIDING DOOR
4 - LOWER HINGE ARM BRACKET

FLEX DRIVE

DESCRIPTION

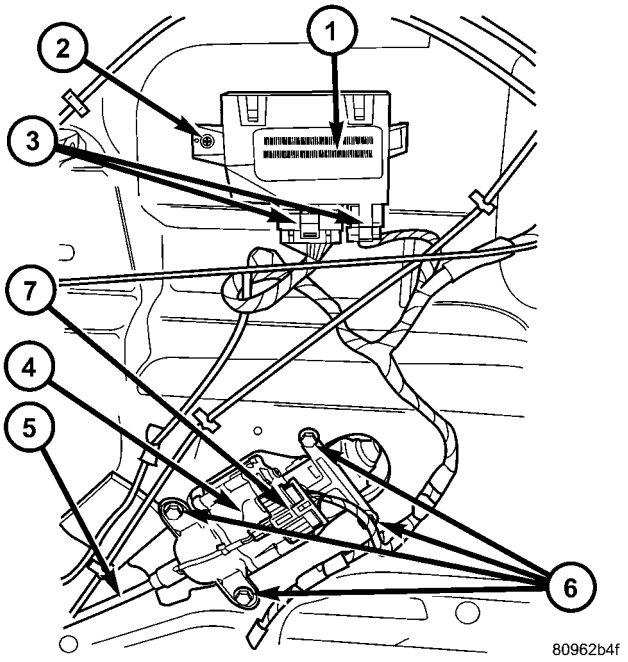

Fig. 17 POWER SLIDING DOOR COMPONENTS

1 - POWER SLIDING DOOR CONTROL MODULE
2 - MODULE RETAINING SCREW
3 - MODULE ELECTRICAL CONNECTORS
4 - DOOR MOTOR ASSEMBLY
5 - FLEX DRIVE ASSEMBLY
6 - DOOR MOTOR RETAINING FASTENERS
7 - DOOR MOTOR ELECTRICAL CONNECTOR

The flex drive assembly is located in the lower portion of the power sliding door (Fig. 17) and is used to connect the door motor to the lower drive unit. An E-clip is used to secure the flex drive to the motor assembly, while the flex drive collar is used to secure the drive to the lower drive unit. The flex drive assembly is basically a flexible drive shaft for the power sliding door system. The flex drive assembly is a replaceable component.

OPERATION

With one end of the flex drive attached to the door motor and the other attached to the lower drive unit, the flex drive transfers the power and torque from the motor to the drive unit. A square shaped drive cable, inside the flex drive assembly engages the motor drive and rotates to move the door accordingly.

REMOVAL

(1) Disconnect and isolate the battery negative cable.

(2) Remove the appropriate sliding door trim panel, (Refer to 23 - BODY/DOORS - SLIDING/TRIM PANEL - REMOVAL).

(3) Position the weathershield aside to gain access to the flex drive assembly.

(4) Remove the E-clip from the flex drive assembly (Fig. 18).

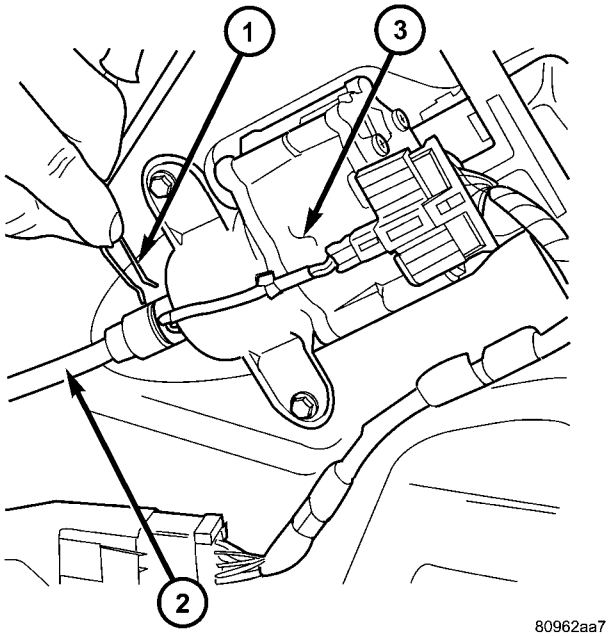

Fig. 18 FLEX DRIVE E-CLIP

1 - FLEX DRIVE CABLE RETAINING CLIP
2 - FLEX DRIVE CABLE
3 - DOOR MOTOR ASSEMBLY

(5) Pull the flex drive straight out of the motor assembly.

FLEX DRIVE (Continued)

(6) Remove the lower drive unit cover retaining screws and remove the cover (Fig. 19).

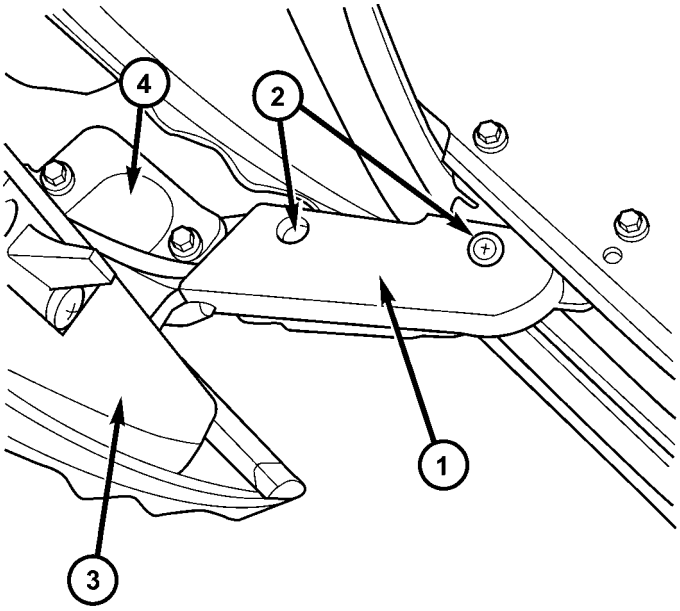

Fig. 19 LOWER HINGE/DRIVE ASSEMBLY

1 - LOWER DRIVE UNIT COVER
2 - LOWER DRIVE UNIT COVER RETAINING SCREWS
3 - SLIDING DOOR
4 - LOWER HINGE ARM BRACKET

(7) Expand the flex drive collar, next to the lower drive unit until the flex drive can be pulled straight off the lower drive unit.

(8) Remove the flex drive assembly from the vehicle.

INSTALLATION

(1) Position the flex drive assembly in the vehicle.

(2) Install the flex drive on the lower drive unit. Push straight on until it snaps in place. It may be necessary to rotate drive unit gear slightly until the flex drive seats in place.

(3) Install the lower drive unit cover and retaining screws (Fig. 20).

(4) Install the flex drive in the motor assembly. Line up the square shaped inner shaft and push straight on (Fig. 21).

(5) Install the E-clip on the flex drive assembly.

(6) Install the weathershield.

(7) Install the sliding door trim panel, (Refer to 23 - BODY/DOORS - SLIDING/TRIM PANEL - INSTALLATION).

(8) Connect the battery negative cable.

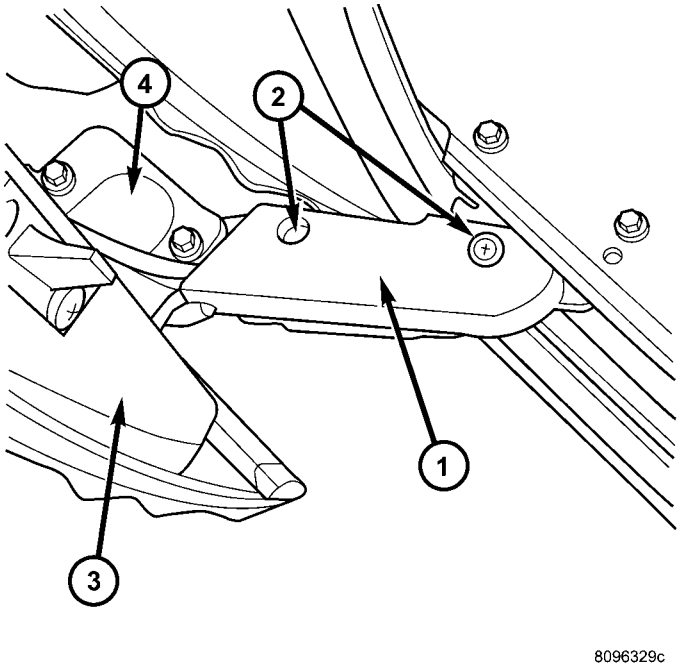

Fig. 20 LOWER HINGE/DRIVE ASSEMBLY

1 - LOWER DRIVE UNIT COVER
2 - LOWER DRIVE UNIT COVER RETAINING SCREWS
3 - SLIDING DOOR
4 - LOWER HINGE ARM BRACKET

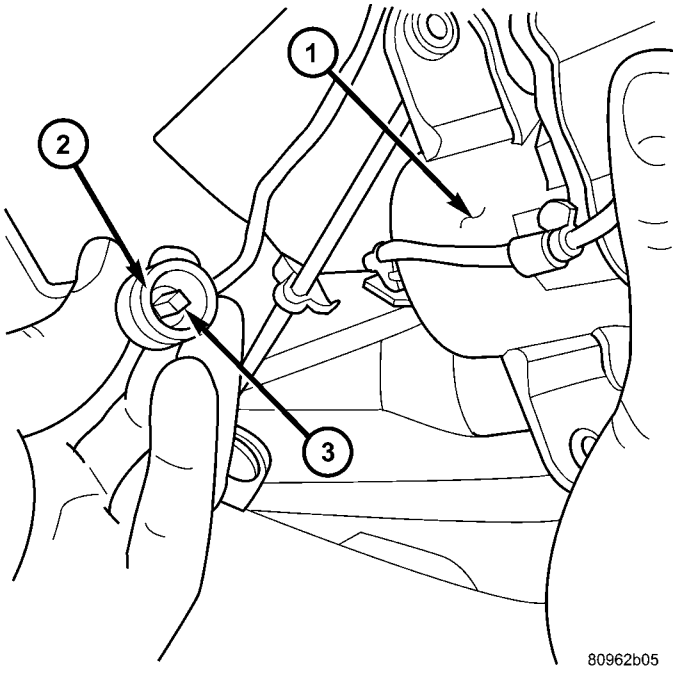

Fig. 21 FLEX DRIVE CABLE

1 - DOOR MOTOR
2 - FLEX DRIVE COLLAR
3 - FLEX DRIVE INNER SHAFT

LOWER DRIVE UNIT TRACK & RACK

DESCRIPTION

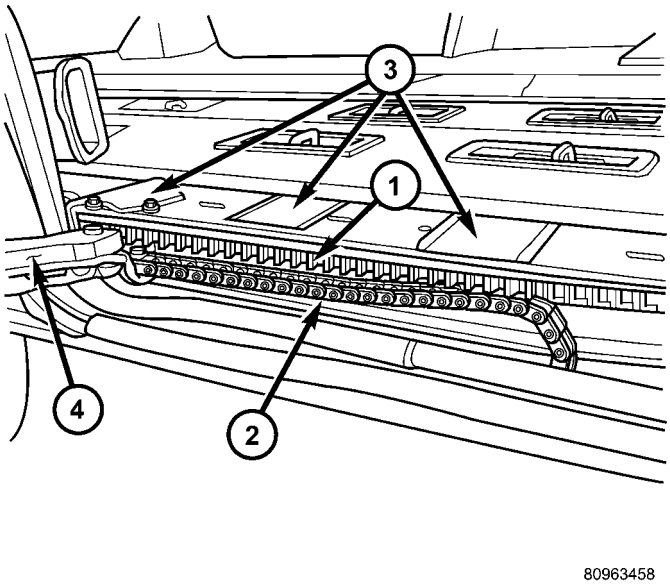

Fig. 22 RACK ACCESS HOLE LOCATIONS

1 - LOWER DOOR TRACK AND RACK ASSEMBLY
2 - WIRE HARNESS
3 - RACK ACCESS HOLE SEALING PATCHES
4 - LOWER DRIVE UNIT COVER

The door track and rack assembly provides a mating rack gear (Fig. 22) for the lower drive unit to engage. The track also accepts the lower hinge rollers, which helps support the weight of the sliding door as well as providing a smooth surface for the hinge rollers to move upon. The lower door track is a replaceable component.

OPERATION

With the start of a power sliding door open cycle, the door motor drives the flex drive assembly. The flex drive assembly drives the lower drive unit. A metal drive gear which is part of the lower drive unit, meshes with the door track rack teeth and moves the sliding door into the full open position. The same operation repeats itself, during a power close cycle only the system rotates in the opposite direction.

REMOVAL

(1) Disconnect and isolate the battery negative cable.

(2) Remove the side door sill plate, (Refer to 23 - BODY/INTERIOR/SLIDING DOOR SILL PLATE - REMOVAL).

(3) Remove the hold-open striker, (Refer to 23 - BODY/DOORS - SLIDING/HOLD OPEN LATCH STRIKER - REMOVAL).

(4) Position a floor jack, with a block of wood under the leading edge of the side door to support it (Fig. 23).

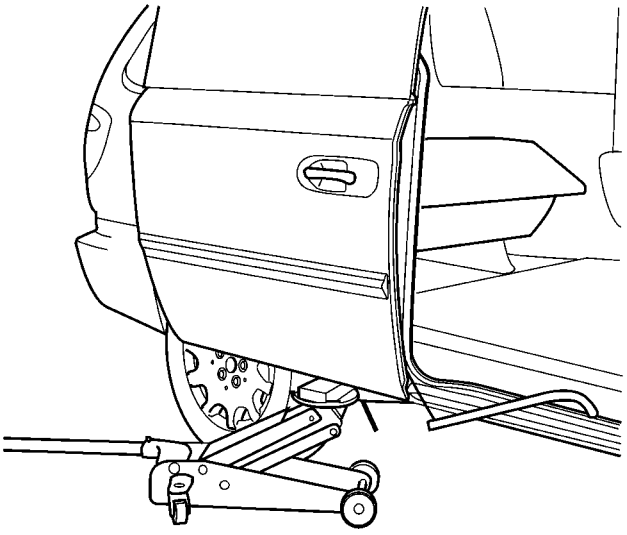

Fig. 23 Supporting Sliding Door

(5) Remove the lower hinge assembly from the door, (Refer to 23 - BODY/DOORS - SLIDING/ LOWER ROLLER ARM - REMOVAL).

(6) Position the wire harness assembly out of door opening, this will allow sufficient room to remove the door track.

LOWER DRIVE UNIT TRACK & RACK (Continued)

(7) Pull back the sealing patches and remove the lower track retaining nuts (Fig. 24).

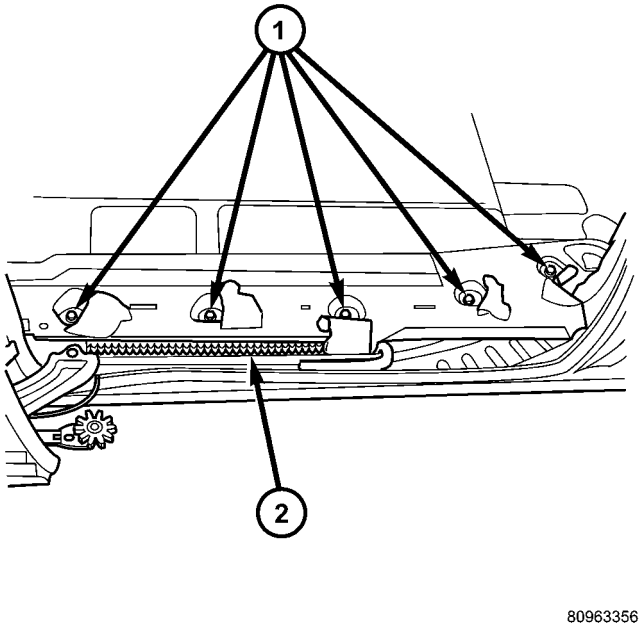

Fig. 24 Lower Track Retaining Nuts

1 - Lower Track Retaining Nuts
2 - Lower Door Track

(8) Carefully remove the lower sliding door track from the vehicle.

INSTALLATION

(1) Carefully position the lower sliding door track in the vehicle.

(2) Install the lower track retaining nuts and install the sealing patches, (Fig. 25). Torque the nuts to 8 N·m (70 in. lbs).

(3) Install the lower hinge assembly on the door, (Refer to 23 - BODY/DOORS - SLIDING/LOWER ROLLER ARM - INSTALLATION).

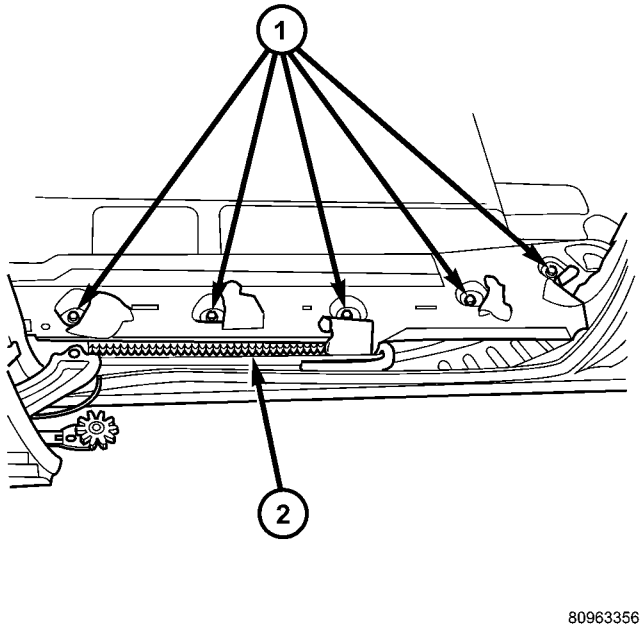

Fig. 25 Lower Track Retaining Nuts

1 - Lower Track Retaining Nuts
2 - Lower Door Track

NOTE: Take care to locate the lower hinge assembly on the door in its original position (ie. match screw washer with rings left on hinge). Adjust door fit if required, (Refer to 23 - BODY/DOORS - SLIDING/SLIDING DOOR - ADJUSTMENTS).

(4) Remove the floor jack.

(5) Install the hold-open striker, (Refer to 23 - BODY/DOORS - SLIDING/HOLD OPEN LATCH STRIKER - INSTALLATION).

(6) Install the side door sill plate, (Refer to 23 - BODY/INTERIOR/SLIDING DOOR SILL PLATE - INSTALLATION).

(7) Connect the battery negative cable.

WIRING HARNESS

DESCRIPTION

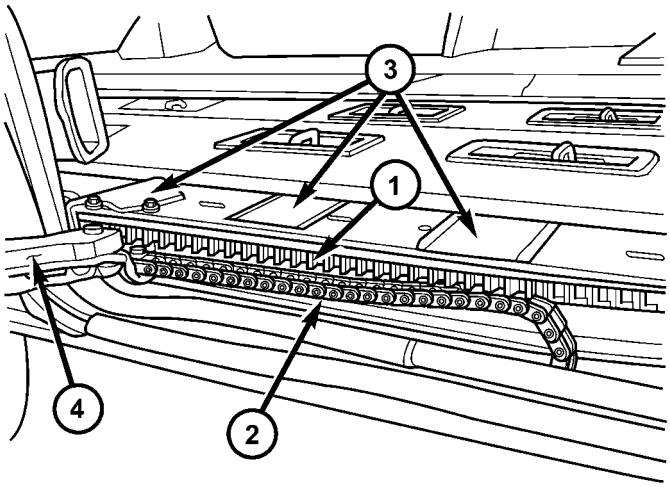

Fig. 26 WIRE HARNESS POSITION AND ORIENTATION

1 - LOWER DOOR TRACK AND RACK ASSEMBLY
2 - WIRE HARNESS
3 - RACK ACCESS HOLE SEALING PATCHES
4 - LOWER DRIVE UNIT COVER

The wire harness supplies power (12v), ground and various electrical signals to the power sliding door for various power door functions. A plastic chain or wiring track covers the wire harness assembly (Fig. 26) and is used to protect the wire harness from abrasion and/or tangling. This wiring track is replaced with the wire harness assembly. The wire harness assembly is a replaceable component.

OPERATION

The wire harness and plastic wiring track provide a safe and reliable means of supplying power, ground and other various electrical connections to the power sliding door. During sliding door movement the wiring track folds and unfolds like the links in a chain.

REMOVAL

(1) Disconnect and isolate the battery negative cable.

(2) Remove the appropriate door trim panel from the power sliding door, (Refer to 23 - BODY/DOORS - SLIDING/TRIM PANEL - REMOVAL).

(3) Remove the lower drive unit cover retaining screws and remove the cover (Fig. 27).

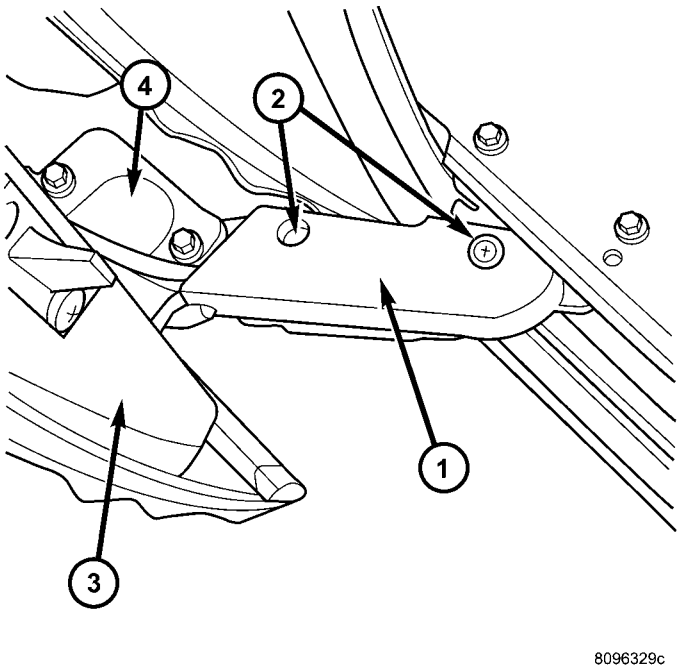

Fig. 27 LOWER HINGE/DRIVE ASSEMBLY

1 - LOWER DRIVE UNIT COVER
2 - LOWER DRIVE UNIT COVER RETAINING SCREWS
3 - SLIDING DOOR
4 - LOWER HINGE ARM BRACKET

(4) Disconnect the power sliding door electrical connector, located just behind the lower drive unit assembly.

(5) Disengage retaining pushpin and pull wire harness away from its power sliding door mounting location.

(6) Using a suitable flat bladed tool, unsnap the wire harness retaining clip from the lower drive unit.

(7) Slide the wire harness off the forward lower drive unit stud.

(8) Using a pushpin removal tool (special tool # C-4755), unsnap wire harness retaining pushpins from the rocker panel.

(9) Remove sliding door lower sill plate, (Refer to 23 - BODY/INTERIOR/SLIDING DOOR SILL PLATE - REMOVAL).

(10) Pull back the rearward edge of the B-pillar trim to access the wire harness connector and disconnect connector.

(11) Remove the wire harness assembly from the vehicle.

INSTALLATION

(1) Position the wire harness assembly in the vehicle.

(2) Connect the wire harness connector located at the rearward edge of the B-pillar.

WIRING HARNESS (Continued)

(3) Install the sliding door lower sill plate, (Refer to 23 - BODY/INTERIOR/SLIDING DOOR SILL PLATE - INSTALLATION).

(4) Snap the wire harness retaining pushpins in the rocker panel.

(5) Slide the wire harness on the lower drive unit stud.

(6) Install the wire harness retaining clip on the lower drive unit stud.

(7) Connect the power sliding door electrical connector, located just behind the lower drive unit.

(8) Install the lower drive unit cover and retaining screws (Fig. 28).

(9) Install the appropriate sliding door trim panel, (Refer to 23 - BODY/DOORS - SLIDING/TRIM PANEL - INSTALLATION).

(10) Connect the battery negative cable.

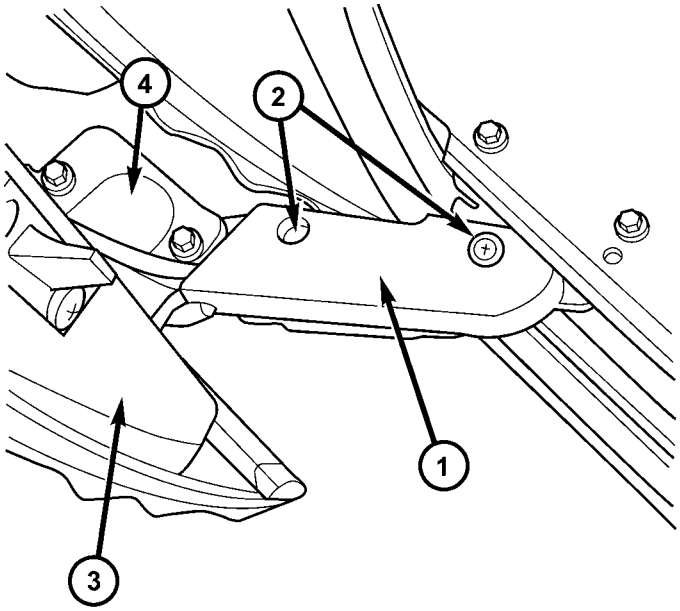

Fig. 28 LOWER HINGE/DRIVE ASSEMBLY

1 - LOWER DRIVE UNIT COVER
2 - LOWER DRIVE UNIT COVER RETAINING SCREWS
3 - SLIDING DOOR
4 - LOWER HINGE ARM BRACKET

POWER WINDOWS

TABLE OF CONTENTS

page

POWER WINDOWS
DESCRIPTION 61
OPERATION 61
DIAGNOSIS AND TESTING
POWER WINDOWS 61
VENT WINDOW MOTOR
DIAGNOSIS AND TESTING
VENT WINDOW MOTOR 62
REMOVAL 62
INSTALLATION 62
WINDOW MOTOR
REMOVAL 62
WINDOW SWITCH
DIAGNOSIS AND TESTING
WINDOW SWITCH 63
REMOVAL 64
INSTALLATION 64

POWER WINDOWS

DESCRIPTION

The Power Window System is activated through switches mounted on the driver and passenger door panels.

OPERATION

Front door window lift motors use permanent type magnets. The B+ and ground applied at the motor terminal pins will cause the motor to rotate in one direction. Reversing current through the motor terminals will cause the motor to rotate in the opposite direction.

The power window motors ground through the master switch in the driver door by a black wire attached to the left cowl panel. Refer to the appropriate wiring information.

The power rear vent windows, if equipped, are operated by switches mounted in the driver door switch bezel. A separate switch is used for each window. Permanent magnet type motors connected to a crank system are used to open and close the rear vent windows. A battery positive and negative connection to either of the two motor terminals will cause the motor to rotate in one direction. Reversing current through these same two connections will cause the motor to rotate in the opposite direction.

DIAGNOSIS AND TESTING

POWER WINDOWS

POWER WINDOW MOTOR TEST

If the power window motor is receiving proper current and ground and does not operate, proceed with motor test. Refer to the appropriate wiring information.

(1) Remove front door trim panel and sound pad as necessary to gain access to power window motor wire connector, (Refer to 23 - BODY/DOOR - FRONT/TRIM PANEL - REMOVAL).

(2) Disconnect power window motor wire connector from door harness.

(3) Using two jumper wires, connect one to a battery (+) source and the other to a good ground (-).

(4) Connect the Negative (-) jumper probe to one of the motor connector terminals.

(5) Momentarily touch the Positive (+) jumper probe to the other motor connector terminal.

When positive probe is connected the motor should rotate in one direction to either move window up or down. If window is all the way up or down the motor will grunt and the inner door panel will flex when actuated in that one direction.

(6) Reverse jumper probes at the motor connector terminals and window should now move in opposite direction. If window does not move or grunt, replace the motor.

If window moved completely up or down, reverse the jumper probes and cycle window to the opposite position to verify full operation.

If motor grunts and does not move, verify that regulator is not binding.

WIRING VOLTAGE TEST

The following wiring test determines whether or not voltage is continuous through the body harness to switch.

(1) Remove the power window switch and bezel assembly from the driver door. (Refer to 8 - ELECTRICAL/POWER WINDOWS/POWER WINDOW SWITCH - REMOVAL).

(2) Disconnect wire connector from back of power window switch.

(3) Switch ignition ON position.

(4) Connect the clip end of a 12 volt test light to Pin 13 in door harness connector at the window switch. Touch the test light probe to Pin 9 and then to Pin 11.

- If the test light illuminates, the wiring circuit between the battery and switch is OK.
- If the lamp does not illuminate, first check the 25 amp circuit breaker attached to the electrical distribution wiring bracket. If the circuit breaker is OK, then check the 40 amp fuse (#28) in the Integrated Power Module (IPM). If both components are OK, then check for a broken wire.

VENT WINDOW MOTOR

DIAGNOSIS AND TESTING

VENT WINDOW MOTOR

If the power vent window motor is receiving proper current and ground and does not operate proceed with motor test. Refer to the appropriate wiring information.

(1) Remove D-pillar trim panel necessary to gain access to power vent window motor wire connector, (Refer to 23 - BODY/INTERIOR/LEFT D-PILLAR TRIM PANEL - REMOVAL) or (Refer to 23 - BODY/INTERIOR/RIGHT D-PILLAR TRIM PANEL - REMOVAL).

(2) Disconnect power vent window motor wire connector from body harness.

(3) Using two jumper wires, connect one to a battery (+) source and the other to a good ground (-).

(4) Connect the Negative (-) jumper probe to one of the motor connector terminals.

(5) Momentarily touch the Positive (+) jumper probe to the other motor connector terminal.

When positive probe is connected the motor should rotate in one direction to either move window open or closed. If window is all the way open or closed the motor will grunt and the crank system will flex when actuated in that one direction.

Reverse jumper probes at the motor connector terminals and window should now move in opposite direction. If window does not move or grunt, replace the motor.

If window moved completely open or closed, reverse the jumper probes and cycle window to the opposite position to verify full operation.

If motor grunts and does not move, verify that crank system is not binding.

REMOVAL

(1) Disconnect and isolate the battery negative cable.

(2) Remove D-pillar trim panel. (Refer to 23 - BODY/INTERIOR/LEFT D-PILLAR TRIM PANEL - REMOVAL) or (Refer to 23 - BODY/INTERIOR/RIGHT D-PILLAR TRIM PANEL - REMOVAL).

(3) Disconnect wire connector from power vent motor.

(4) Using a flat bladed tool, carefully lift the circular actuator link tab. Remove link from window ball socket.

(5) Remove bolts holding power vent motor to D-pillar (Fig. 1).

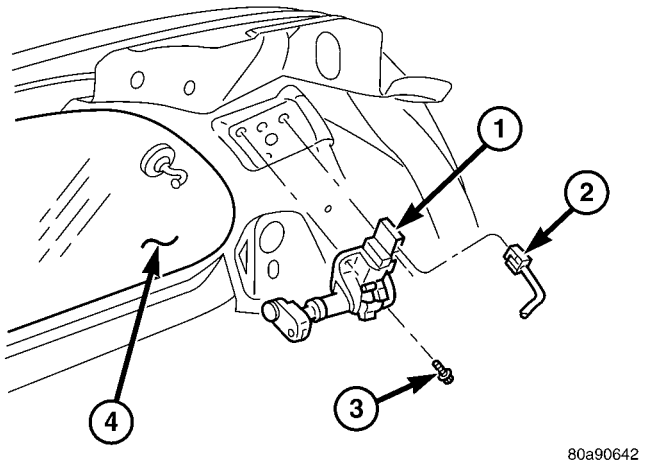

Fig. 1 VENT WINDOW MOTOR

1 - VENT WINDOW MOTOR
2 - WIRE HARNESS CONNECTOR
3 - BOLT
4 - VENT WINDOW

(6) Remove power vent motor.

INSTALLATION

(1) Obtain new vent window motor.

(2) Snap the actuator link socket onto the quarter window ball socket. Using a soft rubber mallet, push the circular link tab flush with link surface.

(3) Install bolts holding power vent motor to D-pillar.

(4) Reconnect wire connector to power vent motor.

(5) Reconnect the battery negative cable.

(6) Cycle quarter window open/close to verify function.

(7) Install D-pillar trim panel.

WINDOW MOTOR

REMOVAL

The window motor is incorporated into the window regulator assembly. If the window motor requires replacement, the window regulator must be replaced. (Refer to 23 - BODY/DOOR - FRONT/WINDOW REGULATOR - REMOVAL).

WINDOW SWITCH

DIAGNOSIS AND TESTING

WINDOW SWITCH

(1) Remove the desired switch to be tested from the door trim panel. Driver's side (master) or passenger side. (Refer to 8 - ELECTRICAL/POWER WINDOWS/POWER WINDOW SWITCH - REMOVAL).

(2) Using an ohmmeter, Test driver door switch for continuity as described in (Fig. 2).

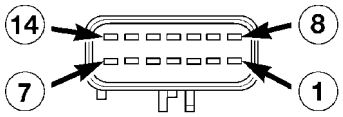

80a7e2ba

Fig. 2 Power Window Master Switch Connector

POWER WINDOW MASTER SWITCH TEST

SWITCH POSITION	CONTINUITY BETWEEN
OFF	13 and 1
	13 and 2
	13 and 3
	13 and 4
	13 and 5
	13 and 6
	13 and 7
	13 and 8
UP DRIVER	11 and 8
*DOWN DRIVER	11 and 6
*X DOWN DRIVER	11and 6
UP PASSENGER	9 and 4
DOWN PASSENGER	9 and 2
LEFT VENT OPEN	11 and 7
LEFT VENT CLOSE	9 and 3
RIGHT VENT OPEN	9 and 1
RIGHT VENT CLOSE	11 and 5

* MUST TEST WITH B+ ON PIN 9 AND GROUND ON PIN 13 FOR CONTINUITY BETWEEN PINS 11 AND 6

(3) If the result are not OK, replace the driver side window lift switch.

(4) Test passenger door switch for continuity as described in (Fig. 3).

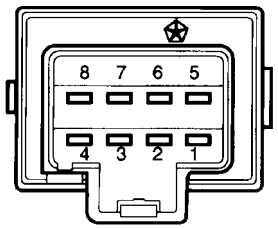

80161b94

Fig. 3 Passenger Door Power Window Switch

PASSENGER WINDOW SWITCH TEST

SWITCH POSITION	CONTINUITY BETWEEN
OFF	3 AND 8
OFF	2 AND 5
UP	1 AND 8
DOWN	1 AND 5

(5) If the results are not OK, replace the switch.

The power window master switch has a Auto-Down feature. The switch is equipped with two detent positions when actuating the power window OPEN. The first detent position allows the window to roll down and stop when the switch is released. The second detent position actuates an integral express roll down relay that rolls the window down after the switch is released. When the express down circuit senses stall current (window has reached end of down travel), the switch will turn current off to the motor. The AUTO feature can be cancelled by actuating the switch UP or DOWN while window is in motion. If the electronic circuit in the switch fails to detect a stall current, the auto down circuit will time out within 9 to 13 seconds.

WINDOW SWITCH (Continued)

REMOVAL

(1) Disconnect and isolate the battery negative cable.

(2) Using a trim stick, start at the bottom of the switch and bezel assembly and pry up to remove the switch and bezel assembly from the door trim panel (Fig. 4).

(3) Unlatch the locking tab on the harness side connector of the switch.

(4) Disconnect wire harness connectors from switch.

INSTALLATION

(1) Reconnect wire harness connector to switch.

(2) Insert switch into door trim panel and press into place.

(3) Reconnect battery negative cable.

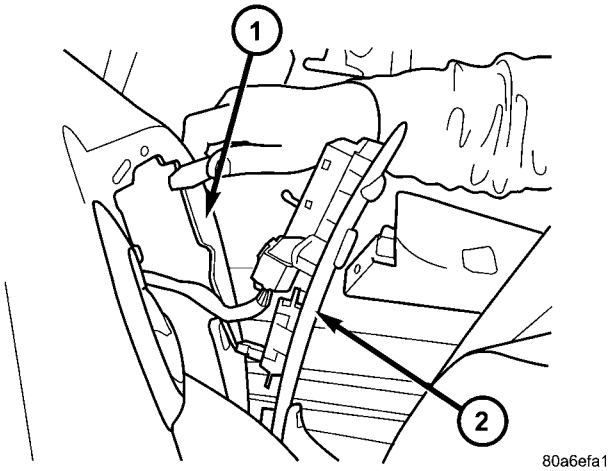

Fig. 4 POWER WINDOW SWITCH

1 - DOOR TRIM PANEL
2 - POWER WINDOW SWITCH AND BEZEL ASSEMBLY

RESTRAINTS

TABLE OF CONTENTS

page

RESTRAINTS
DESCRIPTION 2
OPERATION 4
WARNING
WARNINGS 5
DIAGNOSIS AND TESTING - AIRBAG SYSTEM . 6
STANDARD PROCEDURE
STANDARD PROCEDURE - HANDLING AIRBAGS 6
STANDARD PROCEDURE - SERVICE AFTER AN AIRBAG DEPLOYMENT 7
BELT TENSION SENSOR
DESCRIPTION 8
OPERATION 9
CHILD RESTRAINT ANCHOR
DESCRIPTION 9
OPERATION 10
CLOCKSPRING
DESCRIPTION 10
OPERATION 11
STANDARD PROCEDURE - CLOCKSPRING CENTERING 11
REMOVAL 12
INSTALLATION 12
CURTAIN AIRBAG
DESCRIPTION 12
OPERATION 13
REMOVAL 14
INSTALLATION 16
DRIVER AIRBAG
DESCRIPTION 16
OPERATION 16
REMOVAL 17
INSTALLATION 18
IMPACT SENSOR
DESCRIPTION 18
REMOVAL 19
INSTALLATION 21
KNEE BLOCKER AIRBAG
DESCRIPTION 22
OPERATION 22
REMOVAL 23
INSTALLATION 23
OCCUPANT CLASSIFICATION MODULE
DESCRIPTION 25
OPERATION 25
REMOVAL 26
INSTALLATION 26

page

OCCUPANT RESTRAINT CONTROLLER
DESCRIPTION 27
OPERATION 28
REMOVAL 29
INSTALLATION 29
PASSENGER AIRBAG
DESCRIPTION 30
OPERATION 30
REMOVAL 30
INSTALLATION 32
PASSENGER AIRBAG DISABLED INDICATOR
DESCRIPTION 33
OPERATION 33
REMOVAL 34
INSTALLATION 34
SEAT BELT BUCKLE - FRONT INBOARD
REMOVAL 35
INSTALLATION 35
SEAT BELT BUCKLE - FIRST ROW INBOARD - QUAD BUCKET
REMOVAL 35
INSTALLATION 36
SEAT BELT BUCKLE - FIRST ROW - BENCH
REMOVAL 36
INSTALLATION 37
SEAT BELT BUCKLE - SECOND ROW INBOARD - 50/50 BENCH
REMOVAL 37
INSTALLATION 38
SEAT BELT HEIGHT ADJUSTER - B OR C-PILLAR
REMOVAL 38
INSTALLATION 38
SEAT BELT HEIGHT ADJUSTER KNOB
REMOVAL 38
INSTALLATION 38
SEAT BELT & RETRACTOR - OUTBOARD - FRONT
REMOVAL 38
INSTALLATION 39
SEAT BELT & RETRACTOR - FIRST ROW - OUTBOARD
REMOVAL 39
INSTALLATION 40
SEAT BELT BUCKLE - SECOND ROW - THREE PASSENGER BENCH
REMOVAL 40
INSTALLATION 40

SEAT BELT & RETRACTOR - SECOND ROW - RIGHT OUTBOARD
REMOVAL 40
INSTALLATION 40
SEAT BELT & RETRACTOR - SECOND ROW - RIGHT OUTBOARD WITH REAR HVAC - LWB
REMOVAL 41
INSTALLATION 41
SEAT BELT & RETRACTOR - SECOND ROW - LEFT OUTBOARD
REMOVAL 42
INSTALLATION 42
SEAT BELT TENSIONER
DESCRIPTION 43
OPERATION 43
SEAT WEIGHT BLADDER & PRESSURE SENSOR
DESCRIPTION 43
OPERATION 44

RESTRAINTS

DESCRIPTION

This vehicle is equipped with a Frontal Impact Airbag System, which utilizes the driver/passenger airbags, two front impact sensors, and seat belt tensioners located in the front seat belt buckles. This system is designed to protect occupants in the event of a front impact collision. These airbags are all serviceable parts. The tensioners are integral to the front seat belt buckles. If these pyrotechnics are deployed or defective, they must be replaced.

Vehicles equipped with the Side Impact Airbag System utilize a curtain airbag, three side impact sensors, and the Occupant Restraint Controller (ORC) to determine if the airbag should be deployed. Following a side impact event where the side airbag was deployed, the headliner as well as the curtain airbag must be replaced.

The occupant restraints include both active and passive types. Active restraints are those which require the vehicle occupants to take some action to employ, such as fastening a seat belt; while passive restraints require no action by the vehicle occupants to be employed.

ACTIVE RESTRAINTS

The active restraints include:

- **Front Seat Belts** - Both front seating positions are equipped with three-point seat belt systems employing a lower B-pillar mounted inertia latch-type retractor, height-adjustable upper B-pillar mounted turning loops, a fixed lower seat belt anchor secured to the lower B-pillar, and a traveling end-release buckle secured to the inboard side of the seat cushion frame. The driver side front seat belt buckle includes an integral Hall-effect seat belt switch that detects whether the driver side front seat belt has been fastened.
- **Rear Seat Belts** - Both outboard rear second and third seating positions are equipped with three-point seat belt systems. The outboard seating position belts employ a lower C or D-pillar mounted inertia latch-type retractor, a fixed position upper C or D-pillar mounted turning loop, and a fixed lower seat belt anchor secured to the inboard side of the seat cushion frame.
- **Child Restraint Anchors** - Also equipped in this vehicle are two, fixed-position, child seat upper tether anchors located on the lower seat cushion, in the rear of the lower seat cushion. There is one anchor integral to the back of the third row seat back panel, one on each seat back panel. Two lower second row anchors are also provided for each rear outboard seating position. The lower anchors are integral to the seat cushion frame and are accessed from the front of the second row seat where the seat back meets the seat cushion.

PASSIVE RESTRAINTS

The passive restraints available for this model include the following:

- **Dual Front Airbags** - Multistage driver. front passenger, and driver knee blocker airbags are available for this model. This airbag system is a passive, inflatable, Supplemental Restraint System (SRS) and vehicles with this equipment can be readily identified by the “SRS - AIRBAG” logo molded into the driver airbag trim cover in the center of the steering wheel and also into the passenger airbag door on the instrument panel above the glove box. Vehicles with the airbag system can also be identified by the airbag indicator, which will illuminate in the instrument cluster for about seven seconds as a bulb test each time the ignition switch is turned to the ON position. A pyrotechnic-type seat belt tensioner is integral to the driver and passenger front seat belt buckle of all models equipped with dual front airbags.

RESTRAINTS (Continued)

- **Occupant Classification System** - These vehicles also include an Occupant Classification System (OCS) with components that are located on or in the passenger front seat cushion. These components include an Occupant Classification Module (OCM) and a seat weight bladder and pressure sensor assembly. In addition, this system includes a belt tension sensor integral to the lower anchor of the passenger side front seat belt. Vehicles equipped with the OCS can be readily identified by a Passenger Airbag Disabled (PAD) indicator (Fig. 1) located in the center stack on the instrument panel above HVAC control head and radio.
- **Curtain Airbags** - Curtain airbags are available for this model when it is also equipped with dual front airbags. This airbag system is a passive, inflatable, Supplemental Restraint System (SRS) and vehicles with this equipment can be readily identified by a molded identification trim button with the "SRS - AIRBAG" logo (Fig. 2) located on the headliner above each B-pillar.



812dd0b2

Fig. 1 PAD INDICATOR



8098029e

Fig. 2 SRS LOGO

This vehicle is equipped with a Frontal Impact Airbag System, which utilizes the driver/passenger airbags, driver knee blocker airbag, and seat belt tensioners. This system is designed to protect occupants in the event of a front impact collision. These airbags and seat belt tensioners are all serviceable parts. If these pyrotechnics are deployed or defective, they must be replaced, as well as the Occupant Restraint Controller (ORC) must be diagnosed following procedures outlined in the diagnostic information.

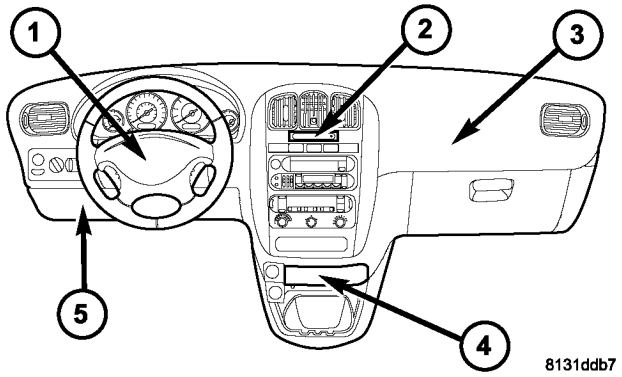

8131ddb7

Fig. 3 AIRBAG COMPONENT LOCATION - INSTRUMENT PANEL

1 - DRIVER AIRBAG
2 - PASSENGER AIRBAG DISABLED (PAD) INDICATOR
3 - PASSENGER AIRBAG
4 - OCCUPANT RESTRAINT CONTROLLER (ORC)
5 - KNEE BLOCKER AIRBAG

The Driver and Passenger Airbag System was designed to reduce the likelihood of injury or death in frontal collisions. Each separate system is supplemental (Fig. 2) or **Passive** to the primary restraint device, which are the seat belts.

- **Airbag Indicator** - The airbag indicator is integral to the Instrument Cluster, which is located on the instrument panel in front of the driver.
- **Belt Tension Sensor** - Vehicles equipped with the Occupant Classification System (OCS) include a belt tension sensor. This sensor is integral to the passenger side front seat belt lower anchor which is secured to the floor, out board and rear of the front passenger seat. -.....concealed beneath an access cover on the seat belt assembly.
- **Clockspring** - The clockspring is located near the top of the steering column, directly beneath the steering wheel (Fig. 3).
- **Curtain Airbag** - A side curtain airbag is located on each inside roof side rail above the headliner, and extends from the A-pillar to just beyond the D-pillar.
- **Driver Airbag** - The driver airbag is located in the center of the steering wheel, beneath the driver airbag trim cover (Fig. 3).
- **Front Impact Sensor** - Two front impact sensors are used on vehicles equipped with dual front airbags, one left side and one right side. The sensors are located on the rail tips, rearward of the bumper attachments.
- **Knee Blocker Airbag** - The driver knee blocker airbag is secured to the instrument panel behind the steering column opening cover (Fig. 3).

RESTRAINTS (Continued)

- **Occupant Classification Module** - Vehicles equipped with the Occupant Classification System (OCS) include an Occupant Classification Module (OCM) which is secured to a stamped steel mounting bracket on the underside of the passenger side front seat cushion frame.
- **Occupant Restraint Controller** - The Occupant Restraint Controller (ORC) is also sometimes referred to as the Airbag Control Module (ACM). The ORC is located on a mount on the floor transmission tunnel just underneath the instrument panel center stack (Fig. 3).
- **Passenger Airbag** - The passenger airbag is located on the instrument panel, beneath the instrument panel top pad and above the glove box on the passenger side of the vehicle (Fig. 3).
- **Passenger Airbag Disabled (PAD) Indicator** - Vehicles equipped with the Occupant Classification System (OCS) include a passenger airbag disabled (PAD) indicator which is located in the instrument panel center stack (Fig. 3).
- **Passenger Knee Blocker** - The passenger knee blocker is a structural reinforcement that is integral to and concealed within the glove box door (Fig. 3).
- **Seat Belt Tensioner** - A seat belt tensioner is integral to both front seat belt buckles. The seat belt buckles are secured to the inner seat frame sides, beneath a cushion trim panel.
- **Seat Weight Bladder and Pressure Sensor Assembly** - Vehicles equipped with the Occupant Classification System (OCS) include a seat weight bladder that is sandwiched between an insulator pad on the top of the passenger side front seat pan and the seat cushion foam padding. A short hose connects the bladder to a pressure sensor which is secured to the Occupant Classification Module (OCM) mounting bracket on the underside of the passenger side front seat cushion frame.
- **Side Impact Sensors** - Six side impact sensors are used on vehicles equipped with the curtain airbags, three left side and three right side. The first row side impact sensor is located in the B-pillar, just above the front seat belt retractor. The second row side impact sensor is located in the sliding side door track opening, just in front of the C-pillar. The third row side impact sensor is located behind the quarter trim panel, above the rear tire wheel well, between the C and D-pillars.

The ORC, the OCM, and the cluster each contain a microprocessor and programming that allow them to communicate with each other using the Programmable Communications Interface (PCI) data bus network. This method of communication is used by the ORC for control of the airbag indicators.

OPERATION

ACTIVE RESTRAINTS

The primary passenger restraints in this or any other vehicle are the seat belts and child restraint anchors. Seat belts and child restraint anchors are referred to as an active restraint because the vehicle occupants are required to physically fasten and properly adjust these restraints in order to benefit from them. See the owner's manual in the vehicle glove box for more information on the features, use and operation of all of the active restraints.

PASSIVE RESTRAINTS

The passive restraints are referred to as a supplemental restraint system because they were designed and are intended to enhance the protection for the occupants of the vehicle **ONLY** when used in conjunction with the seat belts. They are referred to as passive restraints because the vehicle occupants are not required to do anything to make them operate; however, the vehicle occupants must be wearing their seat belts in order to obtain the maximum safety benefit from the supplemental restraint system.

The supplemental restraint system electrical circuits are continuously monitored and controlled by a microprocessor and software contained within the Occupant Restraint Controller (ORC). An airbag indicator in the ElectroMechanical Instrument Cluster (EMIC) illuminates for about seven seconds as a bulb test each time the ignition switch is turned to the ON or START positions. Following the bulb test, the airbag indicator is turned ON or OFF by the ORC to indicate the status of the supplemental restraint system. If the airbag indicator comes ON at any time other than during the bulb test, it indicates that there is a problem in the supplemental restraint system electrical circuits. Such a problem may cause airbags not to deploy when required, or to deploy when not required.

Deployment of the supplemental restraints depends upon the angle and severity of an impact. Deployment is not based upon vehicle speed; rather, deployment is based upon the rate of deceleration as measured by the forces of gravity (G force) upon the impact sensors. When an impact is severe enough, the microprocessor in the ORC signals the inflator of the appropriate airbag units to deploy their airbag cushions. The front seat belt tensioners are provided with a deployment signal by the ORC in conjunction with the front airbags. During a frontal vehicle impact, the knee blockers work in concert with properly fastened and adjusted seat belts to restrain both the driver and the front seat passenger in the proper position for an airbag deployment. The knee blockers also absorb and distribute the crash energy from the

driver and the front seat passenger to the structure of the instrument panel (Refer to 8 - ELECTRICAL/ RESTRAINTS/KNEE BLOCKER AIRBAG - DESCRIPTION). The seat belt tensioners remove the slack from the front seat belts to provide further assurance that the driver and front seat passenger are properly positioned and restrained for an airbag deployment.

When the ORC monitors a problem in any of the dual front airbag system circuits or components, including the seat belt tensioners, it stores a Diagnostic Trouble Code (DTC) in its memory and sends an electronic message to the EMIC to turn on the airbag indicator. Proper testing of the supplemental restraint system components, the Programmable Communications Interface (PCI) data bus, the electronic message inputs to and outputs from the EMIC or the ORC, as well as the retrieval or erasure of a DTC from the ORC or the EMIC requires the use of a scan tool. Refer to the appropriate diagnostic information.

OCCUPANT CLASSIFICATION SYSTEM

The Occupant Classification System (OCS) automatically suppresses or enables passenger airbag and seat belt tensioner operation based upon whether or not the passenger side front seat is occupied and, if the seat is occupied, classifies the size of the occupant and whether the seat is occupied by a child seat.

The OCS has an Occupant Classification Module (OCM) that monitors inputs from the seat weight bladder pressure sensor under the passenger side front seat cushion and from the belt tension sensor on the passenger side front seat belt lower anchor. Based upon those inputs the microprocessor within the OCM classifies the occupant of the passenger side front seat. The OCM then sends electronic occupant classification messages to the ORC. The microprocessor and programming of the ORC uses these occupant classification messages to determine whether to enable or disable the deployment circuits for the passenger airbag and seat belt tensioner.

The OCS electrical circuits and components are continuously monitored by the OCM, and the OCM is continuously monitored by the ORC. A passenger airbag ON/OFF indicator is located in the instrument panel center stack area. This indicator receives battery current whenever the ignition switch is in the ON or START positions, and illuminates only when the ORC pulls the indicator control circuit to ground. The indicator illuminates for about seven seconds as a bulb test each time the ignition switch is turned to the ON or START positions. Following the bulb test, the indicator is turned ON or OFF by the ORC based upon the electronic occupant classification messages received from the OCM. This indicator is illuminated whenever the passenger airbag and seat belt tensioner operation has been suppressed, and is turned OFF whenever they are enabled or when the passenger seat is classified as empty.

When the OCM monitors a problem in any of the OCS circuits or components, it stores a fault code or DTC in its memory circuit and sends an electronic message to the ORC. The ORC then sends an electronic message to the EMIC to turn ON the airbag indicator. If for any reason the OCM is unable to classify the occupant it sends an electronic message to the ORC, and the ORC suppresses passenger airbag and seat belt tensioner operation. Proper testing of the OCS components, the Programmable Communications Interface (PCI) data bus, the electronic message inputs to and outputs from the OCM, the EMIC or the ORC, as well as the retrieval or erasure of a DTC's, requires the use of a scan tool. Refer to the appropriate diagnostic information.

WARNING

WARNINGS

Disconnect and isolate the battery negative cable before beginning any airbag system component diagnosis, testing, removal, or installation procedures. Allow system capacitor to discharge for two minutes before beginning any component testing or service. This will disable the airbag system. Failure to disconnect the battery negative cable may result in accidental airbag deployment, personal injury, or death.

Do not place an intact undeployed airbag face down on a solid surface. The airbag will propel into the air if accidentally deployed and may result in personal injury or death.

When carrying or handling an undeployed airbag, the trim side (face) of the airbag should be pointing towards the body to minimize possibility of injury if accidental deployment occurs. Failure to do this may result in personal injury or death.

Replace airbag system components with Mopar® replacement parts. Substitute parts may appear interchangeable, but internal differences may result in inferior occupant protection. Failure to do so may result in occupant personal injury or death.

Wear safety glasses, rubber gloves, and long sleeved clothing when cleaning powder residue from vehicle after airbag deployment. Sodium hydroxide powder residue emitted from a deployed airbag can cause skin irritation. Flush affected area with cool water if irritation is experienced. If nasal or throat irritation is

experienced, exit the vehicle for fresh air until the irritation ceases. If irritation continues, see a physician.

Do not use a replacement airbag that is not in the original packaging. This may result in improper deployment, personal injury, or death.

The factory installed fasteners, screws and bolts used to fasten airbag components have a special coating and are specifically designed for the airbag system. Do not use substitute fasteners. Use only original equipment fasteners listed in the parts catalog when fastener replacement is required.

During, and following, any child restraint anchor service, due to impact event or vehicle repair, carefully inspect all mounting hardware, tether straps, and anchors for proper installation, operation, or damage. If a child restraint anchor is found damaged in any way, the anchor must be replaced. Failure to do this may result in personal injury or death.

Deployed and nondeployed airbags may or may not have live pyrotechnic material within the airbag inflator. Do not dispose of driver/passenger/seat/curtain/knee blocker airbags or seat belt tensioners unless you are sure of complete deployment. Refer to the Hazardous Substance Control System for proper disposal. Dispose of deployed airbags and tensioners consistent with state, provincial, local, and federal regulations.

After any airbag component testing or service, do not connect the battery negative cable (Refer to 8 - ELECTRICAL/RESTRAINTS - DIAGNOSIS AND TESTING - AIRBAG SYSTEM). Personal injury or death may result if the system test is not performed first.

If the vehicle is equipped with the Occupant Classification System (OCS), do not connect the battery negative cable before performing the OCS Verification Test using the scan tool and the appropriate diagnostic information. Personal injury or death may result if the system test is not performed properly.

Never replace both the Occupant Restraint Controller (ORC) and the Occupant Classification Module (OCM) at the same time. If both require replacement, replace one, then perform the Airbag System test (Refer to 8 - ELECTRICAL/RESTRAINTS - DIAGNOSIS AND TESTING - AIRBAG SYSTEM) before replacing the other. Both the ORC and the OCM store Occupant Classification System (OCS) calibration data, which they transfer to one another when one of them is replaced. If both are replaced at the same time, an irreversible fault will be set in both modules and the OCS may malfunction and cause personal injury or death.

DIAGNOSIS AND TESTING - AIRBAG SYSTEM

(1) With the battery negative remote cable disconnected, connect the scan tool to the Data Link Connector (DLC).

(2) Turn the ignition key to the ON position, then exit vehicle with the scan tool.

(3) After checking that no one is inside the vehicle, connect the battery negative remote terminal.

(4) Read and record the **ACTIVE** Diagnostic Trouble Code (DTC) data.

(5) Read and record any **STORED** DTC's.

(6) Refer to the proper diagnostic information if any DTC's are found in Step 4 and Step 5.

(7) If the airbag warning lamp either fails to light, or goes ON and stays ON, there is a system malfunction. To test the airbag warning lamp (bulb) operation in the cluster (Refer to 8 - ELECTRICAL/INSTRUMENT CLUSTER - DIAGNOSIS AND TESTING). Refer to the proper diagnostic information for any other system problems.

STANDARD PROCEDURE

STANDARD PROCEDURE - HANDLING AIRBAGS

DEPLOYED AIRBAG

WARNING: The vehicle interior may contain a very small amount of powder, a by-product of airbag deployment. This powder can irritate the skin, eyes, nose and throat. Wear safety glasses, rubber gloves, and long sleeved clothing when cleaning any of the powder residue from the vehicle. If you find that the cleanup is irritating your skin, run cool water over the affected area. Also, if you experience nasal or throat irritation, exit the vehicle for fresh air until the irritation ceases. If irritation continues, see a physician.

RESTRAINTS (Continued)

UNDEPLOYED AIRBAG

WARNING: The airbags must be stored in its original special container until used for service. At no time should a source of electricity be permitted near the inflator on the back of an airbag. When carrying or handling an undeployed airbag, the trim side of the airbag should be pointing toward the body to minimize the possibility of personal injury or death if accidental deployment occurs. Do not place undeployed airbag face down on a solid surface, the airbag will propel into the air if accidental deployment occurs.

STANDARD PROCEDURE - SERVICE AFTER AN AIRBAG DEPLOYMENT

DRIVER AIRBAG

After a Driver Airbag has been deployed due to a collision, the following **MUST** be replaced:

- Driver Airbag
- Clockspring Assembly
- Steering Wheel
- Complete Steering Column Assembly w/Lower Steering Column Coupler

All other airbag and vehicle components should be closely inspected following any airbag deployment, and should be replaced when visible damage is incurred.

WARNING: Do not connect the battery negative cable (Refer to 8 - ELECTRICAL/RESTRAINTS - DIAGNOSIS AND TESTING - AIRBAG SYSTEM). Personal injury or death may result if the system test is not performed first.

PASSENGER AIRBAG

After a Passenger Airbag has been deployed due to a collision. the following **MUST** be replaced:

- Passenger Airbag
- Instrument Panel and Pad Assembly

All other airbag and vehicle components should be closely inspected following any airbag deployment, and should be replaced when visible damage is incurred.

WARNING: Do not connect the battery negative cable (Refer to 8 - ELECTRICAL/RESTRAINTS - DIAGNOSIS AND TESTING - AIRBAG SYSTEM). Personal injury or death may result if the system test is not performed first.

KNEE BLOCKER AIRBAG

After a Knee Blocker Airbag has been deployed due to a collision. the following **MUST** be replaced:

- Knee Blocker Airbag
- Instrument Panel and Pad Assembly

All other airbag and vehicle components should be closely inspected following any airbag deployment, and should be replaced when visible damage is incurred.

WARNING: Do not connect the battery negative cable (Refer to 8 - ELECTRICAL/RESTRAINTS - DIAGNOSIS AND TESTING - AIRBAG SYSTEM). Personal injury or death may result if the system test is not performed first.

CURTAIN AIRBAG

After a Curtain Airbag has been deployed due to a collision. the following **MUST** be replaced:

- Curtain Airbag Assembly
- Headliner
- A, B, and C-Pillar Trim on deployed side.

All other airbag and vehicle components should be closely inspected following any airbag deployment, and should be replaced when visible damage is incurred.

WARNING: Do not connect the battery negative cable (Refer to 8 - ELECTRICAL/RESTRAINTS - DIAGNOSIS AND TESTING - AIRBAG SYSTEM). Personal injury or death may result if the system test is not performed first.

OCCUPANT CLASSIFICATION SYSTEM (OCS)

After an impact event, either front, rear, or side, the OCS system components need to be inspected and replaced if found to be damaged.

This includes:

- Belt Tension Sensor
- Occupant Classification Module (OCM)
- Passenger Airbag ON/Off Indicator
- Seat Weight Bladder and Sensor

RESTRAINTS (Continued)

WARNING: Never replace both the Occupant Restraint Controller (ORC) and the Occupant Classification Module (OCM) at the same time. If both require replacement, replace one, then perform the Airbag System test (Refer to 8 - ELECTRICAL/RESTRAINTS - DIAGNOSIS AND TESTING - AIRBAG SYSTEM) before replacing the other. Both the ORC and the OCM store Occupant Classification System (OCS) calibration data, which they transfer to one another when one of them is replaced. If both are replaced at the same time, an irreversible fault will be set in both modules and the OCS may malfunction and result in personal injury or death.

Whether replaced or not, the OCS must be re-zeroed to make sure that the system in within proper parameters to sense the occupants weight correctly.

WARNING: Do not connect the battery negative cable (Refer to 8 - ELECTRICAL/RESTRAINTS - DIAGNOSIS AND TESTING - AIRBAG SYSTEM). Personal injury or death may result if the system test is not performed first.

WARNING: Following successful completion of the Airbag System test procedure, the Occupant Classification System Verification Test must be done using a scan tool and the appropriate diagnostic information. Personal injury or death may result if the system test is not performed.

SEAT BELTS AND TENSIONERS

After a frontal impact where an airbag has been deployed due to a collision. the following **MUST** be replaced:

- Front Seat Belt Buckle (driver and passenger) with integral Tensioners.

WARNING: Do not connect the battery negative cable (Refer to 8 - ELECTRICAL/RESTRAINTS - DIAGNOSIS AND TESTING - AIRBAG SYSTEM). Personal injury or death may result if the system test is not performed first.

All other seat belts should be closely inspected for cuts, tears, fraying, or damage in any way following any frontal impact or airbag deployment. The other seat belts are to be replaced when visible damage is incurred. Inspect the Lower Anchors and Tether for CHildren (LATCH) child restraint anchors for damage after an impact event and replace as needed.

CLEAN UP PROCEDURE

Roll or fold the airbag towards its mounting point (i.e. instrument panel, steering wheel, knee blocker, curtain, or seat back). Then tape the ripped cover over the deployed airbag if applicable.

Use a vacuum cleaner to remove any residual powder from the vehicle interior. Work from the outside in to avoid kneeling or sitting in a contaminated area. Vacuum the heater and A/C outlets as well (Fig. 4). If the heater or air conditioner was in RECIRC mode at time of airbag deployment, operate blower motor on low speed and vacuum powder residue expelled from the heater and A/C outlets. Multiple vacuum cleaning may be necessary to decontaminate the interior of the vehicle.

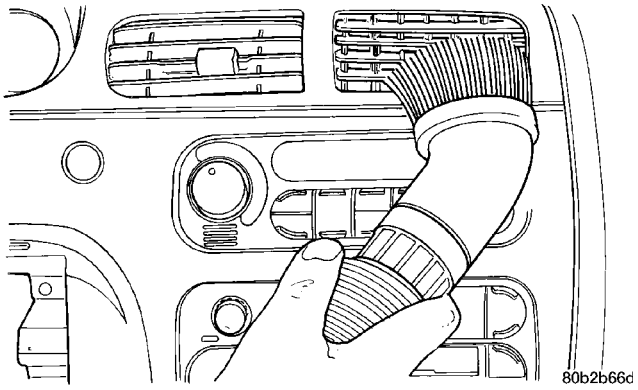

Fig. 4 VACUUM HEATER AND A/C OUTLETS - TYPICAL

BELT TENSION SENSOR

DESCRIPTION

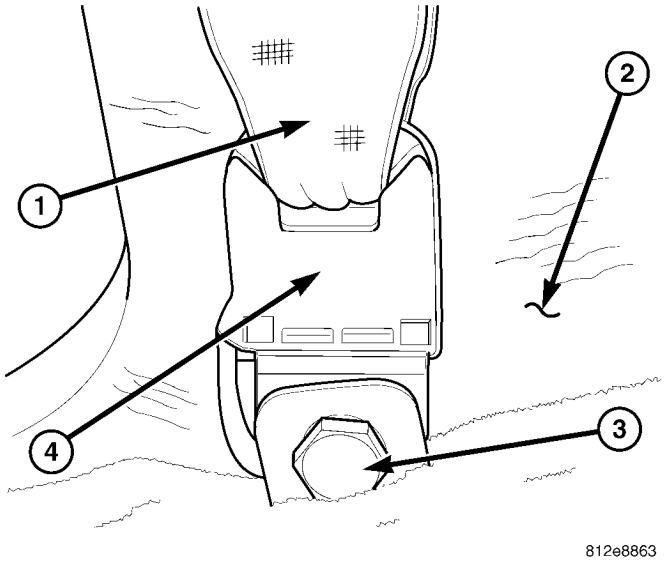

Fig. 5 BELT TENSION SENSOR

1 - SEAT BELT WEBBING
2 - B-PILLAR
3 - SEAT BELT LOWER ANCHOR BOLT
4 - BELT TENSION SENSOR

Vehicles equipped with the Occupant Classification System (OCS) include a belt tension sensor (Fig. 5).

BELT TENSION SENSOR (Continued)

This sensor is integral to the passenger side front seat belt lower anchor which is secured to the lower B-pillar, on the passenger side (Fig. 6). The belt tension sensor consists of a molded plastic housing, a metal seat belt anchor loop, and a short pigtail wire. The electronic circuitry of the belt tension sensor is concealed and protected within the molded plastic housing.

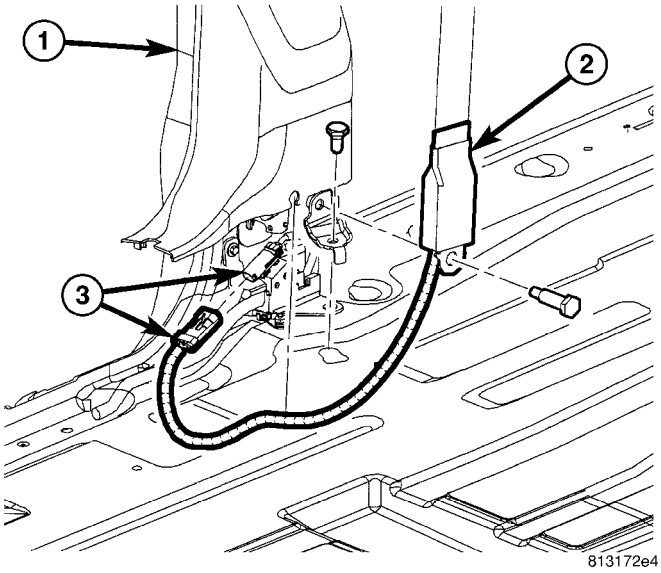

Fig. 6 BELT TENSION SENSOR LOCATION

1 - A-PILLAR
2 - SEAT BELT ANCHOR/BELT TENSION SENSOR
3 - BELT TENSION SENSOR CONNECTOR

The belt tension sensor cannot be repaired and, if faulty or damaged, the entire passenger side front seat belt and retractor unit must be replaced (Refer to 8 - ELECTRICAL/RESTRAINTS/SEAT BELT OUTBOARD FRONT - REMOVAL).

OPERATION

The belt tension sensor is designed to sense the relative cinch load applied to the passenger side front seat belt, which provides a logic input to the microprocessor of the Occupant Classification Module (OCM). When a load is applied to the seat belt, the changes in the load are measured by the belt tension sensor through the seat belt lower anchor. As the load changes, the circuitry of the belt tension sensor changes the output voltage of the sensor.

The belt tension sensor receives a nominal five volts and a ground from the OCM. The OCM then monitors the belt tension sensor output voltage.

WARNING: Do not connect the battery before performing the OCS Verification Test using the scan tool and the appropriate diagnostic information. Personal injury or death may occur.

For further diagnosis and testing of the belt tension sensor, the OCM, and related occupant classification system components, use a scan tool and the appropriate diagnostic information.

CHILD RESTRAINT ANCHOR

DESCRIPTION

The **Lower Anchors and Tether for CHildren, or LATCH** child restraint anchorage system provides for the installation of suitable child restraints in certain seating positions without using the seat belt provided for that seating position. The second seat in these models are equipped with a fixed-position child restraint upper tether anchor (Fig. 7) and child restraint lower anchors (Fig. 8). The third seat is equipped with only a fixed-position child restraint upper tether anchor in the middle seating position. Export vehicles are equipped with fixed-position child restraint upper tether anchors only.

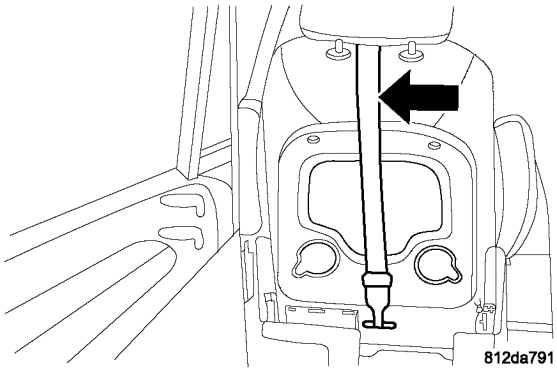

Fig. 7 CHILD RESTRAINT UPPER TETHER/ANCHOR - 2ND ROW

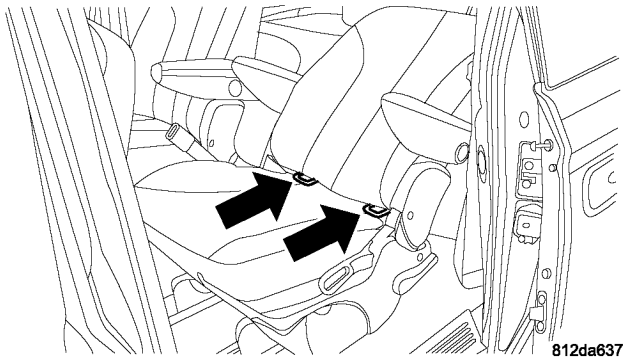

Fig. 8 CHILD RESTRAINT LOWER ANCHORS SECOND ROW

CHILD RESTRAINT ANCHOR (Continued)

The second row seats have lower anchors for each rear outboard seating position (Fig. 8). These anchors are welded to the seat cushion frame. They are each accessed from the front of their respective seats, at each side where the seat back meets the seat cushion. These lower anchors cannot be adjusted or repaired and, if faulty or damaged, the seat must be replaced as a unit.

WARNING: During, and following, any child restraint anchor service, due to impact event or vehicle repair, carefully inspect all mounting hardware, tether straps and anchors for proper installation, operation, or damage. If a child restraint anchor is found damaged in any way, the anchor must be replaced with the seat assembly. Failure to do so could result in personal injury or death.

REAR SEAT DELETE

If the vehicle is ordered without rear seats (rear seat delete), then there will be a tether strap included. This is to be looped under the second seat anchor and then extended forward (Fig. 9) to clip to the tether strap of the child seat in the front passenger seat (Fig. 10). There will be no lower anchor loops for child seat anchoring in the front passenger seat. Use the seat belt for lower child seat attachment in this instance.

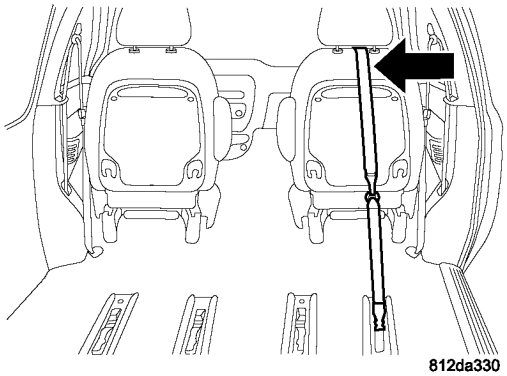

Fig. 9 TETHER STRAP PLACEMENT - REAR SEAT DELETE

OPERATION

See the owner's manual in the vehicle glove box for more information on the proper use of all of the factory-installed child restraint anchors.

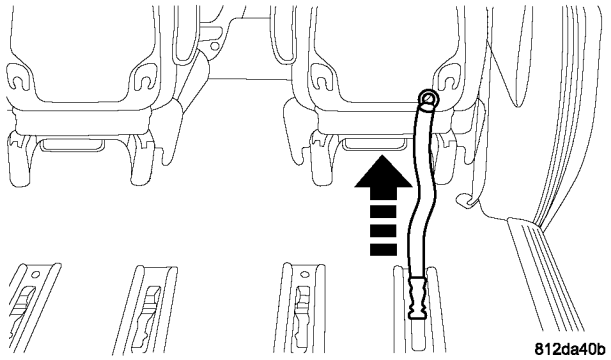

Fig. 10 TETHER STRAP INSTALLED- REAR SEAT DELETE

CLOCKSPRING

DESCRIPTION

The clockspring is mounted on the steering column behind the steering wheel. It is used to maintain a continuous electrical circuit between the wiring harness and the drivers airbag.

The clockspring assembly is secured with two integral plastic latches onto the upper steering column housing near the top of the steering column behind the steering wheel. The clockspring consists of a flat, round molded plastic case with a stubby tail that hangs below the steering column. The tail contains two connectors that face toward the instrument panel. Within the plastic case is a spool-like molded plastic rotor with a large exposed hub and several plastic rollers.

A rubber bumper block is located on each side of the tower formation that contains the connector receptacle and pigtail wires on the upper surface of the rotor hub. The lower surface of the rotor hub has a molded plastic turn signal cancel cam with a single lobe that is integral to the rotor. Within the plastic case and wound around the rotor spool is a long ribbon-like tape that consists of several thin copper wire leads sandwiched between two thin plastic membranes. The outer end of the tape terminates at the connector receptacles that face the instrument panel, while the inner end of the tape terminates at the pigtail wires and connector receptacle on the hub of the clockspring rotor that face the steering wheel.

CLOCKSPRING (Continued)

Service replacement clocksprings are shipped pre-centered and with a molded plastic shield that snaps onto the rotor over the release button. The release button secures the centered clockspring rotor to the clockspring case and the shield prevents the release button from being inadvertently depressed during shipment and handling, but the shield must be removed from the clockspring after it is installed on the steering column (Refer to 8 - ELECTRICAL/RESTRAINTS/CLOCKSPRING - STANDARD PROCEDURE).

The clockspring cannot be repaired. If the clockspring is faulty, damaged, or if the driver airbag has been deployed, the clockspring must be replaced.

OPERATION

The clockspring is a mechanical electrical circuit component that is used to provide continuous electrical continuity between the fixed instrument panel wire harness and the electrical components mounted on or in the rotating steering wheel. The rotating electrical components include the driver airbag, the horn switch, the speed control switches, and the remote radio switches, if the vehicle is so equipped. The clockspring case is positioned and secured to the upper steering column housing near the top of the steering column. The connector receptacles on the tail of the clockspring case connect the clockspring to the vehicle electrical system through two connectors from the instrument panel wire harness.

The clockspring rotor is movable and is keyed by the tower formation that is molded onto the upper surface of the rotor hub to an opening that is cast into the steering wheel armature. Rubber bumper blocks on either side of the clockspring tower formation eliminate contact noise between the clockspring tower and the steering wheel. The lobe of the turn signal cancel cam on the lower surface of the clockspring rotor hub contacts a turn signal cancel actuator of the multi-function switch to provide automatic turn signal cancellation. The yellow or black-sleeved pigtail wires on the upper surface of the clockspring rotor connect the clockspring to the driver airbag, while a steering wheel wire harness connects the connector receptacle on the upper surface of the clockspring rotor to the horn switch and, if the vehicle is so equipped, to the optional speed control switches and remote radio switches on the steering wheel.

The clockspring tape has travel limits and can be damaged by being wound too tightly during full stop-to-stop steering wheel rotation. To prevent this from occurring, the clockspring is centered when it is installed on the steering column. Centering the clockspring indexes the clockspring tape to the movable steering components so that the tape can operate within its designed travel limits. However, if the clockspring is removed from the steering column or if the steering shaft is disconnected from the steering gear, the clockspring spool can change position relative to the movable steering components and must be re-centered following completion of the service or the tape may be damaged (Refer to 8 - ELECTRICAL/RESTRAINTS/CLOCKSPRING - STANDARD PROCEDURE).

Service replacement clocksprings are shipped pre-centered and with a plastic shield installed over the clockspring release button. This shield should not be removed and the release button should not be depressed until the clockspring has been installed on the steering column. If the release button is depressed before the clockspring is installed on a steering column, the clockspring centering procedure must be performed (Refer to 8 - ELECTRICAL/RESTRAINTS/CLOCKSPRING - STANDARD PROCEDURE).

STANDARD PROCEDURE - CLOCKSPRING CENTERING

If the rotating tape (wire coil) in the clockspring is not positioned properly with the steering wheel and the front wheels, the clockspring may fail. The following procedure MUST BE USED to center the clockspring if it is not known to be properly positioned, or if the front wheels were moved from the straight ahead position.

(1) Position steering wheel and front wheels straight ahead.

(2) Release hood latch and open hood.

(3) Disconnect and isolate the battery negative cable.

(4) Wait two minutes for the system reserve capacitor to discharge before beginning any airbag component service.

(5) Remove driver airbag from steering wheel (Refer to 8 - ELECTRICAL/RESTRAINTS/DRIVER AIRBAG - REMOVAL).

(6) Disconnect wire connectors from back of driver airbag.

(7) Disconnect the 2–way connector from remote radio control harness (if equipped).

(8) Disconnect the 4–way harness connector from the speed control (if equipped)/horn harness to the clockspring.

(9) Remove steering wheel (Refer to 19 - STEERING/COLUMN/STEERING WHEEL - REMOVAL).

(10) Rotate the clockspring rotor clockwise until the rotor stops. Do not apply excessive force.

(11) From the end of travel, rotate the rotor two turns counterclockwise until the wires end up at the top.

CLOCKSPRING (Continued)

(12) Install the steering wheel (Refer to 19 - STEERING/COLUMN/STEERING WHEEL - INSTALLATION).

(13) Connect the 4–way harness connector to the speed control/horn harness to the clockspring.

(14) Connect the 2–way connector to the remote radio control harness.

(15) Install the driver airbag (Refer to 8 - ELECTRICAL/RESTRAINTS/DRIVER AIRBAG - INSTALLATION). Torque the two screws to 10 N·m (90 in. lbs.).

WARNING: Do not connect the battery negative cable (Refer to 8 - ELECTRICAL/RESTRAINTS - DIAGNOSIS AND TESTING). Personal injury or death may result if the system test is not performed properly.

REMOVAL

(1) Position steering wheel and front wheels straight ahead.

(2) Release hood latch and open hood.

(3) Disconnect and isolate the battery negative cable.

(4)

WARNING: Wait two minutes for the airbag system reserve capacitor to discharge before beginning any airbag system or component service. Failure to do so may result in accidental airbag deployment, personal injury or death.

(5) Remove driver airbag from steering wheel (Refer to 8 - ELECTRICAL/RESTRAINTS/DRIVER AIRBAG - REMOVAL).

(6) Disconnect wire connectors from back of driver airbag.

(7) Disconnect the 2–way connector from remote radio control harness.

(8) Disconnect the 4–way harness connector from the speed control/horn harness to the clockspring.

(9) Remove steering wheel (Refer to 19 - STEERING/COLUMN/STEERING WHEEL - REMOVAL).

(10) Remove steering column shrouds and disconnect traction control wire connector (if equipped) (Refer to 19 - STEERING/COLUMN/LOWER SHROUD - REMOVAL).

(11) Disconnect 4-way and 6-way connectors between the clockspring and the instrument panel wiring harness.

(12) Remove clockspring from column assembly by removing the two retaining screws that attach the clock spring to the column.

INSTALLATION

(1) Install the clockspring on the column.

(2) Connect the 4-way and 6-way connectors between the clockspring and the instrument panel wiring harness.

(3) Install the steering column shrouds and connect traction control wire connector (if equipped) (Refer to 19 - STEERING/COLUMN/LOWER SHROUD - INSTALLATION).

(4) Install the steering wheel (Refer to 19 - STEERING/COLUMN/STEERING WHEEL - INSTALLATION).

(5) Connect the 4–way harness connector to the speed control/horn harness to the clockspring.

(6) Connect the 2–way connector to the remote radio control harness (if equipped).

(7) Install the driver airbag (Refer to 8 - ELECTRICAL/RESTRAINTS/DRIVER AIRBAG - INSTALLATION). Torque the two screws to 10 N·m (90 in. lbs.).

WARNING: Do not connect the battery negative cable (Refer to 8 - ELECTRICAL/RESTRAINTS - DIAGNOSIS AND TESTING - AIRBAG SYSTEM). Personal injury or death may result if the system test is not performed first.

CURTAIN AIRBAG

DESCRIPTION

Curtain Airbags (Fig. 11) are available when it is also equipped with dual front airbags. These airbags are passive and inflatable, Supplemental Restraint System (SRS) components, and vehicles with this equipment can be readily identified by a molded identification trim button with the “SRS - AIRBAG” logo (Fig. 12) located on the B-pillar and C-pillar upper trim panels. This system is designed to reduce injuries to the vehicle occupants in the event of a side impact collision.

Curtain airbags have two individually controlled curtain airbag units. These airbag units are concealed and mounted above the headliner where they are each secured to one of the roof side rails (Fig. 13). Each airbag cushion is contained within a fabric wrap that extends along the roof rail from the A-pillar at the front of the vehicle to just behind the D-pillar at the rear of the vehicle. One tether extends down the A-pillar from the front of the airbag cushion, and a second tether extends to the roof rail at the D-pillar. The end of the A-pillar tether is secured to a slot in the sheet metal with a metal hook retained by a bolt. The D-pillar tether is attached to the d-pillar.

CURTAIN AIRBAG (Continued)

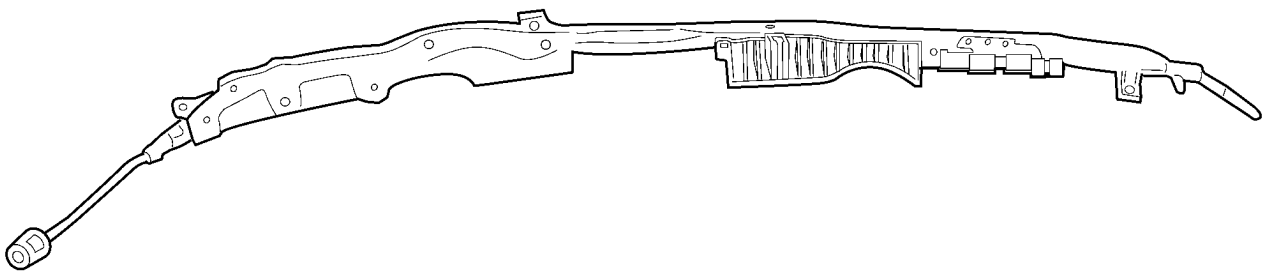

81314bb6

Fig. 11 CURTAIN AIRBAG



8098029e

Fig. 12 SRS LOGO

The hybrid-type inflator for each airbag is secured to the roof rail just behind the C-pillar. The inflator bracket and the airbag cushion are secured with both plastic push-in fasteners and screws to the roof rail. A short pigtail wire harness connects the curtain airbag inflator to the body wire harness.

The curtain airbag cannot be adjusted or repaired and must be replaced if deployed, faulty, or in any way damaged. Once a curtain airbag has been deployed, the complete airbag unit (Refer to 8 - ELECTRICAL/RESTRAINTS - STANDARD PROCEDURE - SERVICE AFTER AN AIRBAG DEPLOYMENT), headliner, upper A/B/C and D-pillar trim, and all other visibly damaged components must be replaced (Refer to Section 23 - BODY/INTERIOR for complete body interior Removal and Installation procedures). Refer to the appropriate diagnostic information for complete diagnosis and testing or the curtain airbags.

The curtain airbags also contain Head Impact Counter Measures (Fig. 14). These injection molded plastic components help to reduce the likelihood of injury or death in the event of a side impact event. They are attached to the curtain airbag and are also used to mount the curtain to the inside roof rail. Their purpose is to maintain a flat surface in which the deployed airbag to be pressed against when interior occupants/forces are pushing outwards.

OPERATION

Each curtain airbag is deployed individually by an electrical signal generated by the Occupant Restraint Controller (ORC) to which it is connected through left or right curtain airbag line 1 and line 2 (or squib) circuits. The hybrid-type inflator assembly for each airbag contains a small canister of highly compressed inert gas. When the ORC sends the proper electrical signal to the airbag inflator, the electrical energy creates enough heat to ignite chemical pellets within the inflator. Once ignited, these chemicals burn rapidly and produce the pressure necessary to rupture a containment disk in the inert gas canister. The inflator and inert gas canister are sealed and connected to a tubular manifold so that all of the released gas is directed into the folded curtain airbag cushion, causing the cushion to inflate.

CURTAIN AIRBAG (Continued)

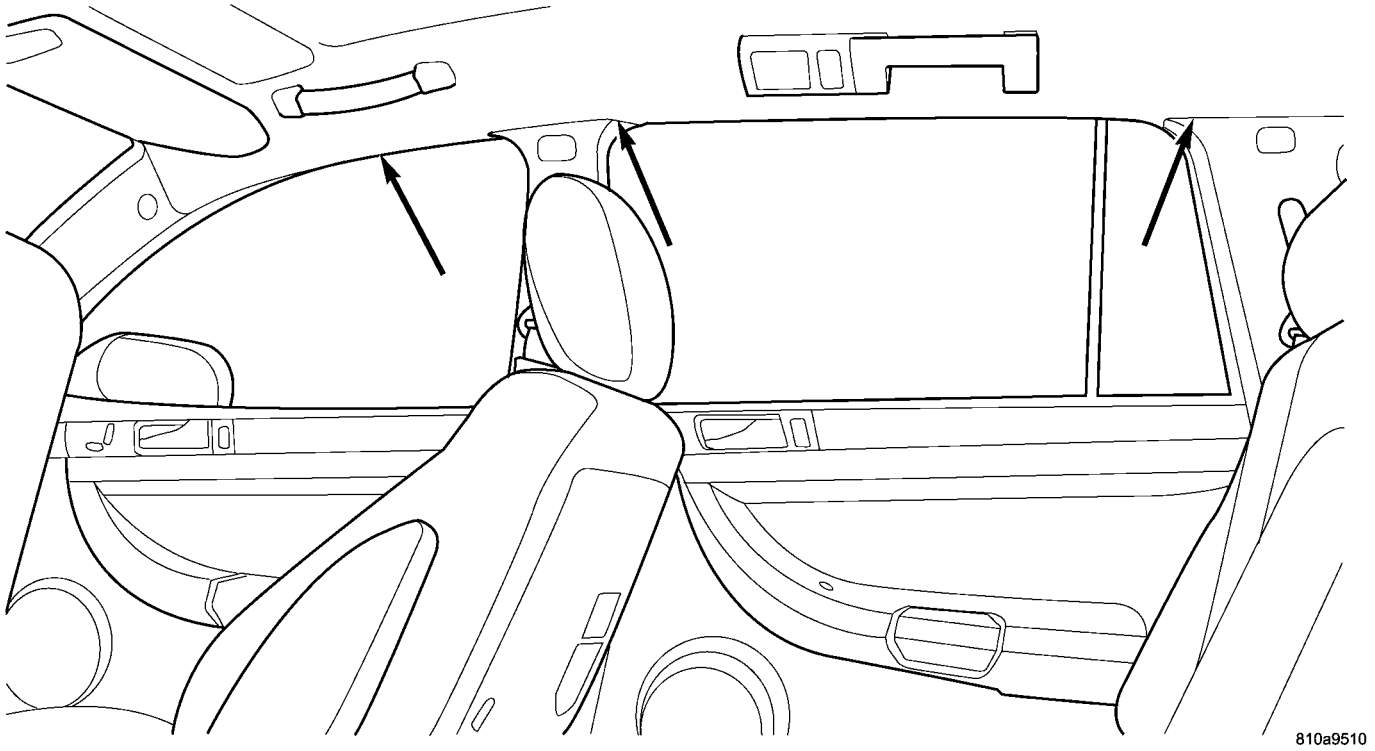

Fig. 13 CURTAIN AIRBAG LOCATION - TYPICAL

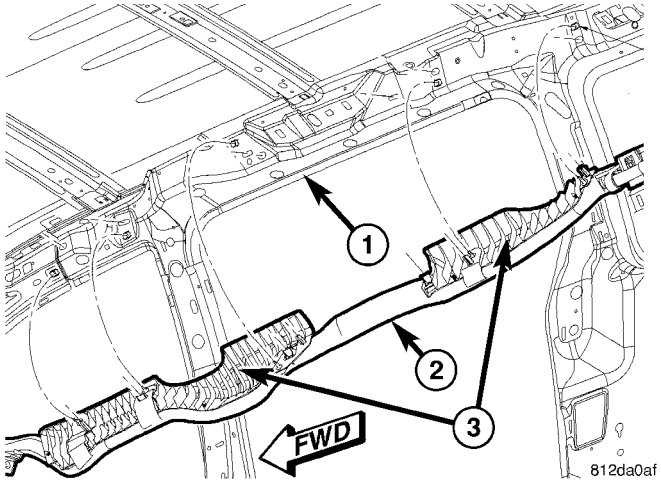

Fig. 14 HEAD IMPACT COUNTER MEASURES

1 - SLIDING DOOR OPENING/ROOF RAIL
2 - CURTIAN AIRBAG
3 - HEAD IMPACT COUNTER MEASURES

As the airbag cushion inflates it will drop down from the roof rail between the edge of the headliner and the side glass/body pillars to form a curtain-like cushion to protect the vehicle occupants during a side impact collision. The front and rear tethers keep the side curtain bag taut, thus ensuring that the bag will deploy in the proper position. Following the airbag deployment, the airbag cushion quickly deflates by venting the inert gas through the loose weave of the cushion fabric, and the deflated cushion hangs down loosely from the roof rail.

REMOVAL

(1) Open hood, disconnect and isolate the battery negative cable.

(2)

WARNING: Wait two minutes for the airbag system reserve capacitor to discharge before beginning any airbag system or component service. Failure to do so may result in accidental airbag deployment, personal injury or death.

CURTAIN AIRBAG (Continued)

(3) Remove the headliner from the vehicle (Refer to 23 - BODY/INTERIOR/HEADLINER - REMOVAL).

(4) Disconnect the curtain airbag squib connector (Fig. 15).

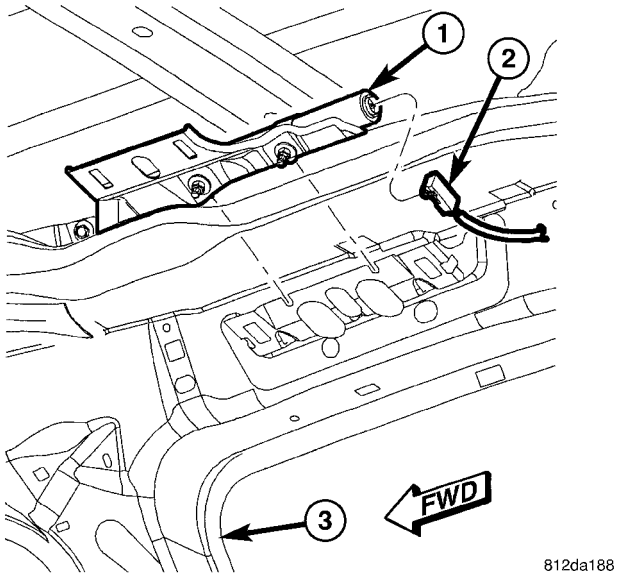

Fig. 15 CURTAIN AIRBAG SQUIB CONNECTION

1 - CURTAIN AIRBAG INFLATOR
2 - CURTAIN AIRBAG SQUIB CONNECTOR
3 - C-PILLAR

(5) Remove the bolt from the curtain airbag front tether and unclip from the A-pillar (Fig. 16).

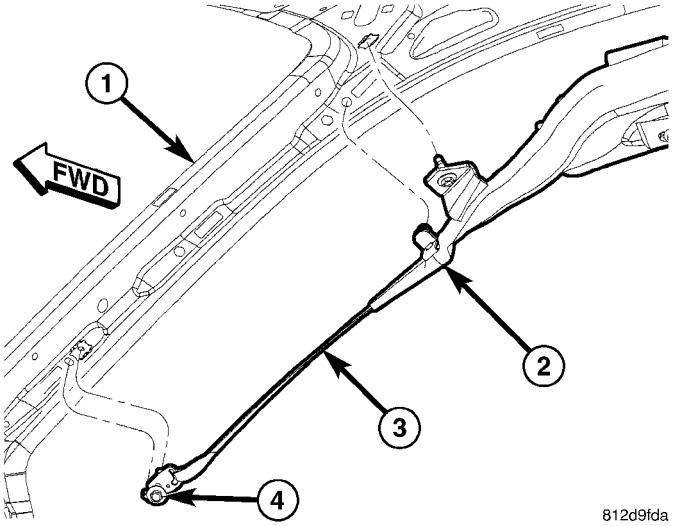

Fig. 16 CURTAIN AIRBAG FRONT TETHER ATTACHMENT

1 - A-PILLAR
2 - CURTAIN AIRBAG PUSH FASTENER
3 - CURTAIN AIRBAG FRONT TETHER
4 - CURTAIN AIRBAG FRONT TETHER ATTACHMENT HOOK/ BOLT

(6) Remove the screws that secure the curtain airbag to the spring nuts in the roof side rail (Fig. 17).

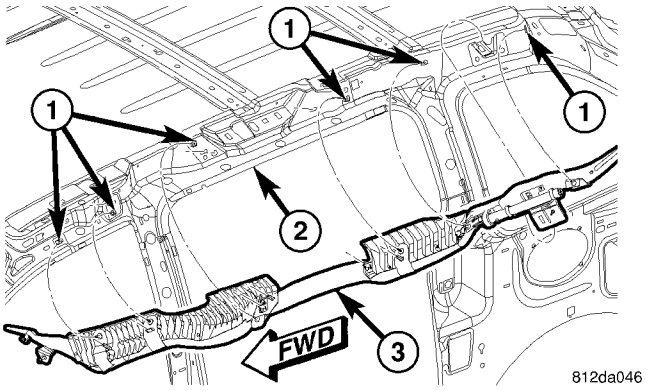

Fig. 17 CURTAIN AIRBAG REMOVE/INSTALL

1 - CURTAIN AIRBAG ATTACHMENT LOCATIONS
2 - SLIDING DOOR OPENING/ROOF RAIL
3 - CURTAIN AIRBAG

(7) Remove the bolt from the curtain airbag inflator mounting bracket (Fig. 18).

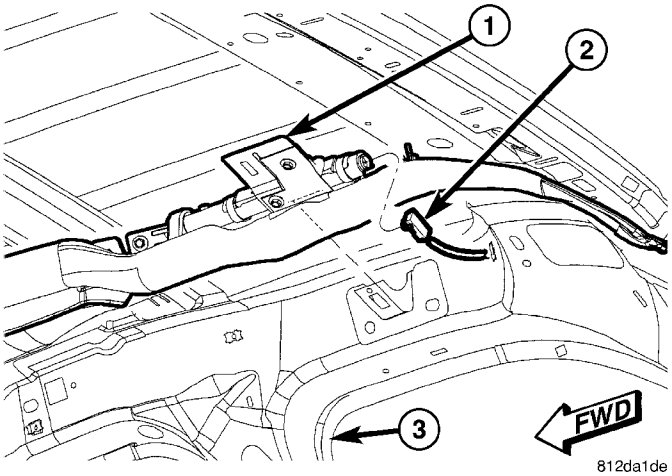

Fig. 18 CURTAIN AIRBAG INFLATOR MOUNTING BRACKET ATTACHMENT

1 - CURTAIN AIRBAG INFLATOR MOUNTING BRACKET
2 - CURTAIN AIRBAG SQUIB CONNECTOR
3 - C-PILLAR

(8) Remove the bolts retaining the curtain airbag to the roof rail in the d-pillar area (Fig. 19).

(9) Grasp the curtain airbag, using a trim stick (special tool #C-4755) or equivalent, gently pry out on push fasteners to disengage the curtain airbag and remove it from its mounting location in the side roof rail (Fig. 17).

(10) Remove the curtain airbag from the vehicle as a unit.

CURTAIN AIRBAG (Continued)

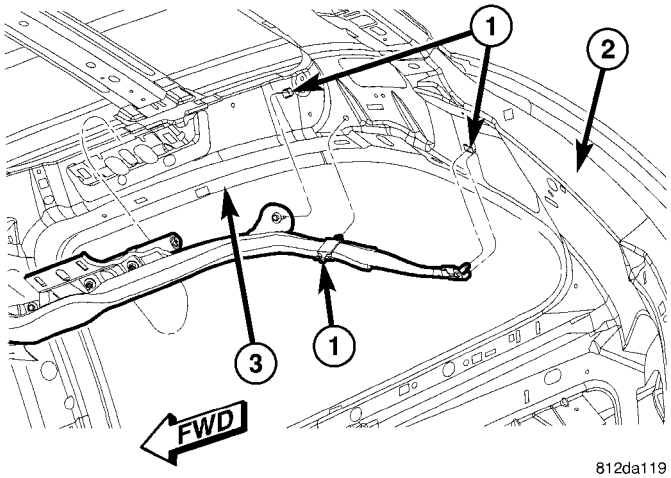

Fig. 19 CURTAIN AIRBAG D-PILLAR ATTACHMENT

1 - CURTAIN AIRBAG D-PILLAR ATTACHMENT LOCATIONS
2 - D-PILLAR
3 - ROOF RAIL AT REAR QUARTER GLASS

INSTALLATION

(1) Position curtain airbag over retaining holes in roof rail and firmly snap into place (Fig. 17).

(2) Install the curtain airbag retaining bolts (Fig. 17).

(3) Engage the side curtain airbag front tether in the A-pillar and install retaining bolt (Fig. 16).

(4) Install the bolt in the curtain airbag inflator mounting bracket (Fig. 18).

(5) Install the retaining bolts at the d-pillar (Fig. 19).

(6) Connect the curtain airbag squib connector (Fig. 15).

(7) Install the headliner into the vehicle (Refer to 23 - BODY/INTERIOR/HEADLINER - INSTALLATION).

WARNING: Do not connect the battery negative cable (Refer to 8 - ELECTRICAL/RESTRAINTS - DIAGNOSIS AND TESTING - AIRBAG SYSTEM). Personal injury or death may result if the system test is not performed first.

(8) Verify vehicle and system operation.

(9) Close hood.

DRIVER AIRBAG

DESCRIPTION

The injection molded, thermoplastic driver airbag protective trim cover is the most visible part of the driver airbag. The driver airbag is located in the center of the steering wheel, where it is secured to the steering wheel armature. Concealed beneath the driver airbag trim cover are the horn switch, the folded airbag cushion, the airbag cushion retainer, the airbag housing, the airbag inflator, and the retainers that secure the inflator to the airbag housing. The airbag cushion, housing, and inflator are secured within an integral receptacle molded into the back of the trim cover.

The resistive membrane-type horn switch is secured with heat stakes to the inside surface of the driver airbag trim cover, between the trim cover and the folded airbag cushion. The horn switch ground pigtail wire has a female spade terminal connector that receives a path to ground through a male spade terminal that is integral to the driver airbag housing stamping and is located near the upper right corner on the back of the housing. The horn switch feed pigtail wire has a white, molded plastic insulator that is secured by an integral retainer to a mounting hole located near the lower left corner on the back of the housing, and is connected to the vehicle electrical system through a take out and connector of the steering wheel wire harness.

The airbag is a multistage unit that deploys with less force than those previously used. The airbag inflator is a dual-initiator, non-azide, pyrotechnic-type unit with four mounting studs and is secured to the stamped metal airbag housing using four hex nuts with washers. Two keyed and color-coded connector receptacles on the driver airbag inflator connect the two inflator initiators to the vehicle electrical system through two yellow or black-jacketed, two-wire pigtail harnesses of the clockspring. The driver airbag, trim cover, and horn switch unit cannot be repaired, and must be replaced if deployed or in any way damaged.

OPERATION

The Driver Airbag Trim Cover contains the horn switch, inflator device, and a fabric bag. The driver airbag trim cover/horn switch is not serviced separately from the driver airbag components.

When the front airbag system is deployed, the following **MUST** be replaced:

- Complete Steering Column Assembly
- Lower Steering Column Coupler
- Steering Wheel.
- Clockspring.
- Driver Airbag
- Passenger Airbag
- Knee Blocker Airbag
- Upper Instrument Panel with Pad
- Front Seat Belt Buckles, both driver and passenger with integral tensioners.

DRIVER AIRBAG (Continued)

CARE OF UNDEPLOYED AIRBAGS

WARNING: Airbags must be stored in their original special container until used for service. At no time should a source of electricity be permitted near the inflator on the back of an airbag. When carrying or handling an undeployed airbag, the trim side of the airbag should be pointing toward the body to minimize possibility of injury if accidental deployment occurs. Do not place undeployed airbag face down on a solid surface, the airbag will propel into the air if accidental deployment occurs.

REMOVAL

DEPLOYED AIRBAG

(1) Clean powder residue from interior of vehicle (Fig. 4).
(2) Position steering wheel and front wheels straight ahead.
(3) Release hood latch and open hood.
(4) Disconnect and isolate the battery negative cable.
(5)

WARNING: Wait two minutes for the airbag system reserve capacitor to discharge before beginning any airbag system or component service. Failure to do so may result in accidental airbag deployment, personal injury or death.

(6) Remove two screws retaining driver airbag to steering wheel.
(7) Disconnect wire connectors from back of driver airbag.
(8) Disconnect the 2–way connector from remote radio control harness.
(9) Disconnect the 4–way harness connector from the speed control/horn harness to the clockspring.
(10) Remove steering wheel (Refer to 19 - STEERING/COLUMN/STEERING WHEEL - REMOVAL).
(11) Remove steering column shrouds and disconnect traction control wire connector (if equipped) (Refer to 19 - STEERING/COLUMN/LOWER SHROUD - REMOVAL).
(12) Disconnect 4-way and 6-way connectors between the clockspring and the instrument panel wiring harness.
(13) Remove clockspring from column assembly by removing the two retaining screws that attach the clockspring to the column.

WARNING: The clockspring, steering wheel, and complete steering column assembly w/lower steering column coupler must be replaced also in the event of a driver airbag deployment. Personal injury or death may result if not replaced.

UNDEPLOYED AIRBAG

(1) Release hood latch and open hood.
(2) Disconnect and isolate the battery negative cable.

WARNING: Wait two minutes for the system reserve capacitor to discharge before beginning any airbag component service. Personal injury or death may result.

(3) Remove two screws retaining driver airbag to steering wheel.
(4) Disconnect wire connectors from back of driver airbag (Fig. 20).

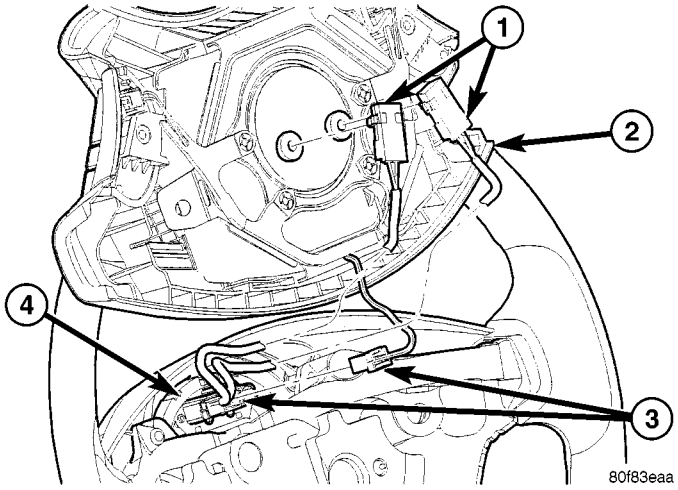

Fig. 20 DRIVER AIRBAG WIRE CONNECTIONS

1 - AIRBAG SQUIB CONNECTORS
2 - DRIVER AIRBAG
3 - HORN/SPEED CONTROL CONNECTOR
4 - CLOCK SPRING

(5) Disconnect the 2–way connector from remote radio control harness.
(6) Disconnect the 4–way harness connector from the speed control/horn harness to the clockspring.
(7) Remove driver airbag from vehicle.

WARNING: When carrying or handling an undeployed airbag, the trim side of the airbag should be pointing toward the body to minimize the possibility of injury if accidental deployment occurs. Do not place undeployed airbag face down on a solid surface, the airbag will propel into the air if accidental deployment occurs. Failure to do this may result in personal injury or death.

DRIVER AIRBAG (Continued)

INSTALLATION

DEPLOYED AIRBAG

(1) Perform clean up procedure (Refer to 8 - ELECTRICAL/RESTRAINTS - STANDARD PROCEDURE - SERVICE AFTER AN AIRBAG DEPLOYMENT).

(2) Install a new steering column assembly and lower steering column coupler (Refer to 19 - STEERING/COLUMN - INSTALLATION).

(3) Install the new clockspring.

(4) Connect the 4-way and 6-way connectors between the clockspring and the instrument panel wiring harness.

(5) Install the steering column shrouds and connect traction control wire connector (if equipped) (Refer to 19 - STEERING/COLUMN/LOWER SHROUD - INSTALLATION).

(6) Install the steering wheel (Refer to 19 - STEERING/COLUMN/STEERING WHEEL - INSTALLATION).

(7) Connect the 4–way harness connector to the speed control/horn harness to the clockspring.

(8) Connect the 2–way connector to the remote radio control harness.

(9) Install the driver airbag and the two screws retaining the airbag. Tighten screws to 10 N·m (90 in. lbs.)

WARNING: Do not connect the battery negative cable (Refer to 8 - ELECTRICAL/RESTRAINTS - DIAGNOSIS AND TESTING - AIRBAG SYSTEM). Personal injury or death may result if the system test is not performed first.

UNDEPLOYED AIRBAG

(1) Connect the harness connector on the driver airbag trim cover (horn, speed controls) to the clockspring.

(2) Connect the squib connectors to the driver airbag.

(3) Position the driver airbag into the steering wheel.

(4) Install the two screws retaining the airbag. Tighten screws to 10 N·m (90 in. lbs.)

WARNING: Do not connect the battery negative cable (Refer to 8 - ELECTRICAL/RESTRAINTS - DIAGNOSIS AND TESTING - AIRBAG SYSTEM). Personal injury or death may result if the system test is not performed first.

IMPACT SENSOR

DESCRIPTION

FRONT IMPACT SENSORS

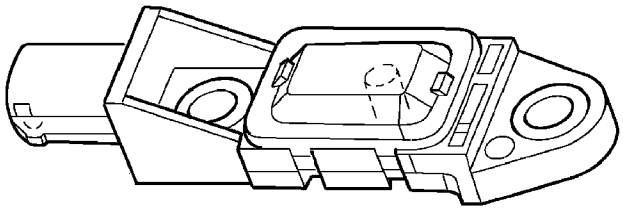

Fig. 21 FRONT IMPACT SENSOR

There are two front impact sensors (Fig. 21), one on the left, and one on the right front sides of the vehicle. These sensors are mounted remotely from the impact sensor that is internal to the Occupant Restraint Controller (ORC). The right and left front and side impact sensors are identical in construction and calibration and each front impact sensor is secured with two screws. The front impact sensors are secured with two screws to the outboard sides of the right and left front rail tips.

The impact sensor housing has an integral connector and two mounting ears, each with a metal sleeve to provide crush protection. A cavity in the center of the molded black plastic impact sensor housing contains the electronic circuitry of the sensor which includes an electronic communication chip and an electronic impact sensor. Potting material fills the cavity to seal and protect the internal electronic circuitry and components. The front impact sensors are each connected to the vehicle electrical system through the headlamp to dash wire harness.

The front impact sensors cannot be repaired or adjusted and, if damaged or faulty, they must be replaced. If a front impact sensor is faulty, only the sensor needs to be replaced. If the sensor is damaged or faulty, or if proper tightening torque of the screws that secure the sensor to the bracket cannot be achieved, the sensor and bracket must be replaced. Refer to the proper body diagnostic information for diagnosis and testing.

IMPACT SENSOR (Continued)

SIDE IMPACT SENSORS

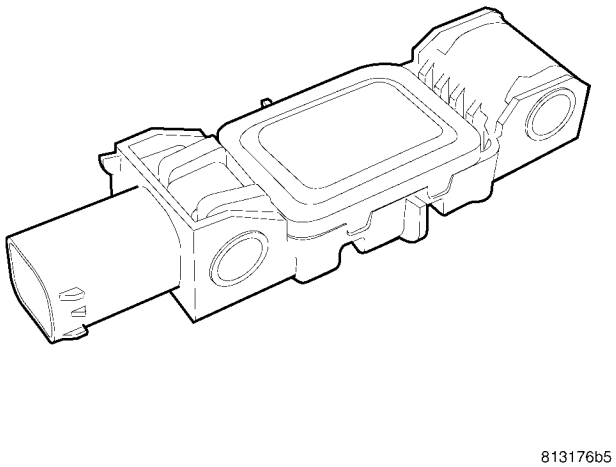

Fig. 22 SIDE IMPACT SENSOR

Three side impact sensors (Fig. 22) are used on each side of the vehicle. These sensors are mounted remotely from the bi-directional safing sensor that is internal to the Occupant Restraint Controller (ORC). The side and front impact sensors are identical in construction and calibration and each impact sensor is secured with two screws. Each side impact sensor is secured with two screws. The first row side impact sensor is located in the B-pillar, just above the front seat belt retractor (Fig. 23). The second row side impact sensor is located in the sliding door opening, in the lower door track area (Fig. 23). The third row side impact sensor is located behind the quarter trim panel, above the rear tire wheel well, between the C and D-pillars (Fig. 23).

The impact sensor housing has an integral connector. A cavity in the center of the molded black plastic impact sensor housing contains the electronic circuitry of the sensor which includes an electronic communication chip and an electronic impact sensor. Potting material fills the cavity to seal and protect the internal electronic circuitry and components. The side impact sensors are each connected to the vehicle electrical system through a connector of the body harness.

The side impact sensors cannot be repaired or adjusted. If damaged or faulty, they must be replaced. Refer to the proper body diagnostic information for diagnosis and testing.

REMOVAL

FRONT IMPACT SENSOR

The right and left front impact sensors are mounted identically on the front rail tips.

(1) Open hood, disconnect and isolate the battery negative cable.

(2)

WARNING: Wait two minutes for the airbag system reserve capacitor to discharge before beginning any airbag system or component service. Failure to do so may result in accidental airbag deployment, personal injury or death.

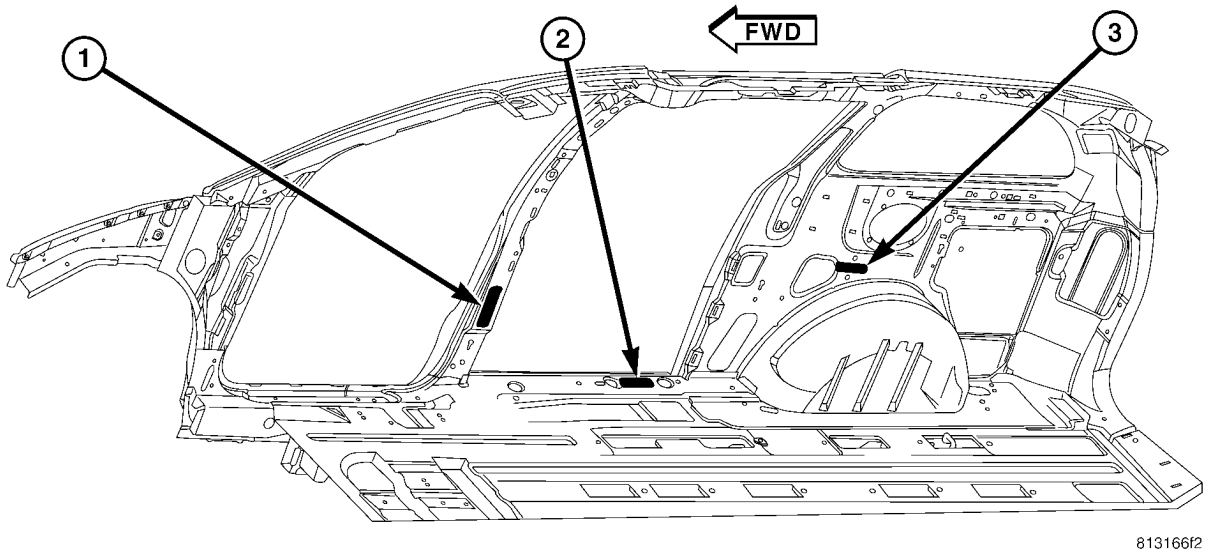

Fig. 23 SIDE IMPACT SENSOR LOCATION

1 - FRONT ROW SIDE IMPACT SENSOR
2 - SECOND ROW SIDE IMPACT SENSOR
3 - THIRD ROW SIDE IMPACT SENSOR

IMPACT SENSOR (Continued)

(3) Hoist vehicle.
(4) Disconnect electrical connector (Fig. 24).
(5) Remove the two screws attaching front impact sensor to outer rails (Fig. 24).

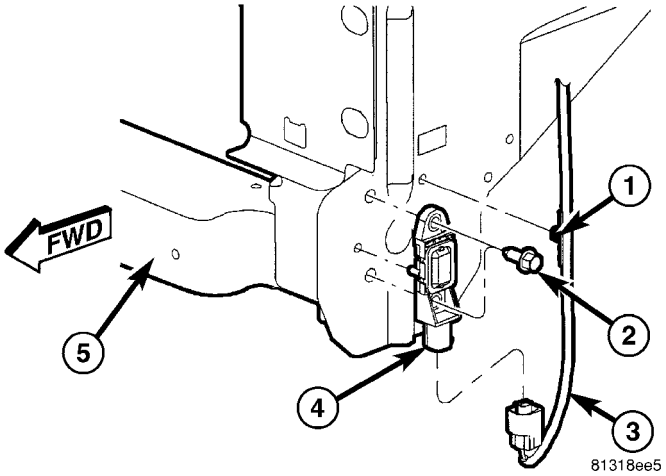

Fig. 24 FRONT IMPACT SENSOR REMOVE/INSTALL

1 - FRONT IMPACT SENSOR WIRE HARNESS RETAINER
2 - FRONT IMPACT SENSOR RETAINING SCREW
3 - FRONT IMPACT SENSOR WIRE HARNESS
4 - FRONT IMPACT SENSOR
5 - LOWER RADIATOR SUPPORT

(6) Remove sensor from vehicle.

SIDE IMPACT SENSORS

B-PILLAR MOUNTED

The right and left front row side impact sensors, are mounted identically, on opposite sides of the vehicle, in the b-pillar.

(1) Open hood, disconnect and isolate the battery negative cable.
(2)

WARNING: Wait two minutes for the system reserve capacitor to discharge before beginning any airbag component service. Personal injury or death may result.

(3) Remove the B-pillar lower trim for the side of the vehicle that you are replacing the side impact sensor (Refer to 23 - BODY/INTERIOR/B-PILLAR LOWER TRIM - REMOVAL).
(4) Disconnect the electrical connector from the impact sensor (Fig. 25).
(5) Remove the four retaining screws to the impact sensor bracket (Fig. 25).
(6) Remove impact sensor from vehicle (Fig. 26).

SLIDING DOOR OPENING MOUNTED

The right and left second row side impact sensors, are mounted identically, on opposite sides of the vehicle, in the sliding door opening lower rear where the lower roller arm mounts in the lower door track.

(1) Open hood, disconnect and isolate the battery negative cable.
(2)

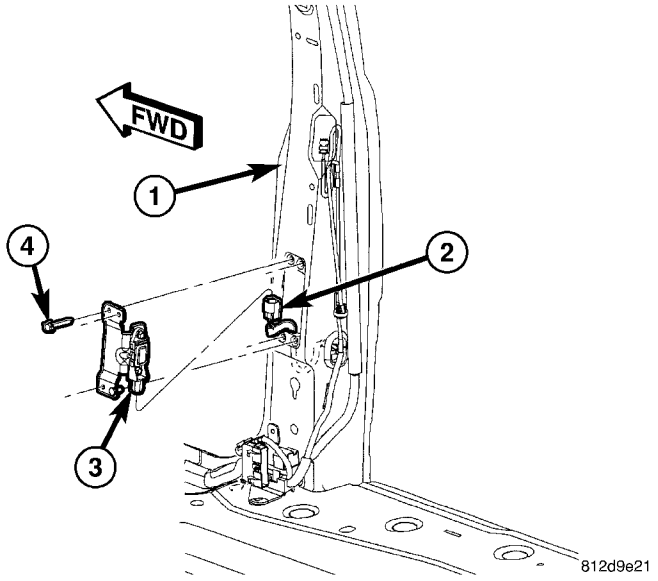

Fig. 25 FRONT ROW SIDE IMPACT SENSOR AND BRACKET

1 - B-PILLAR
2 - FRONT ROW SIDE IMPACT SENSOR ELECTRICAL CONNECTOR
3 - FRONT ROW SIDE IMPACT SENSOR AND MOUNTING BRACKET
4 - FRONT ROW SIDE IMPACT SENSOR RETAINING SCREW

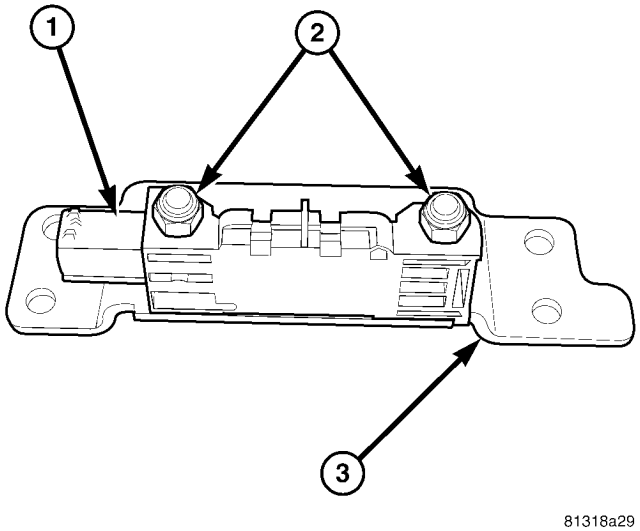

Fig. 26 FRONT ROW SIDE IMPACT SENSOR/ BRACKET

1 - FRONT ROW SIDE IMPACT SENSOR
2 - SENSOR TO BRACKET ATTACHMENT
3 - FRONT ROW SIDE IMPACT SENSOR MOUNTING BRACKET

IMPACT SENSOR (Continued)

WARNING: Wait two minutes for the system reserve capacitor to discharge before beginning any airbag component service. Personal injury or death may result.

(3) Open sliding door to the fullest open position.
(4) Remove the two retaining screws to the impact sensor (Fig. 27).

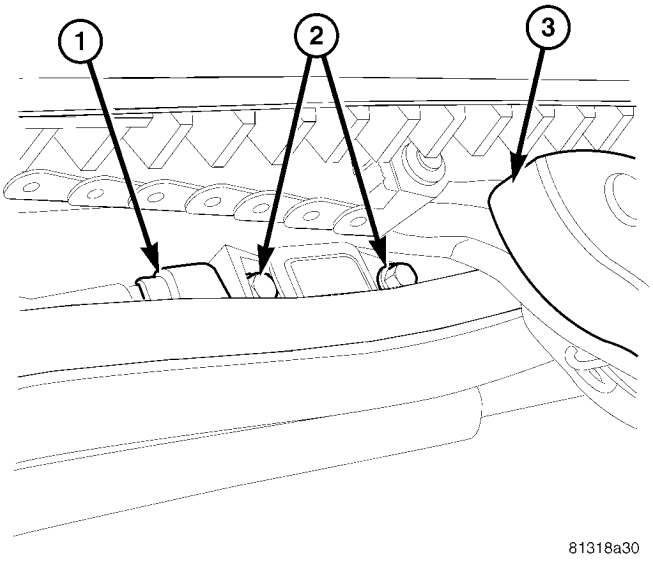

Fig. 27 2ND ROW SIDE IMPACT SENSOR

1 - 2ND ROW SIDE IMPACT SENSOR ELECTRICAL CONNECTOR
2 - 2ND ROW SIDE IMPACT SENSOR RETAINING SCREWS
3 - SLIDING DOOR LOWER ROLLER ARM

(5) Disconnect the electrical connector from the impact sensor and remove from vehicle (Fig. 27).

QUARTER PANEL MOUNTED

(1) Open hood, disconnect and isolate the battery negative cable.
(2)

WARNING: Wait two minutes for the system reserve capacitor to discharge before beginning any airbag component service. Personal injury or death may result.

(3) Remove the quarter trim panel for the side of the vehicle that you are replacing the side impact sensor (Refer to 23 - BODY/INTERIOR/QUARTER TRIM PANEL - REMOVAL).
(4) Remove the two retaining screws to the impact sensor (Fig. 28).
(5) Disconnect the electrical connector from the impact sensor and remove from vehicle (Fig. 28).

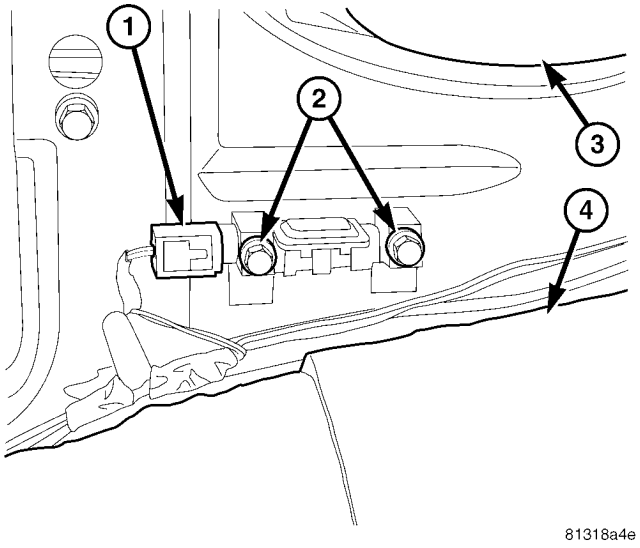

Fig. 28 3RD ROW SIDE IMPACT SENSOR

1 - 3RD ROW SIDE IMPACT SENSOR
2 - 3RD ROW SIDE IMPACT SENSOR MOUNTING SCREWS
3 - REAR SPEAKER
4 - REAR WHEEL WELL

INSTALLATION

FRONT IMPACT SENSOR

(1) Position sensor in vehicle (Fig. 24).
(2) Install the two retaining screws to the impact sensor (Fig. 24). Torque screws to 7 N·m (62 in. lbs.).
(3) Connect electrical connector (Fig. 24).
(4) Lower vehicle from hoist.

WARNING: Do not connect the battery negative cable (Refer to 8 - ELECTRICAL/RESTRAINTS - DIAGNOSIS AND TESTING - AIRBAG SYSTEM). Personal injury or death may result if the system test is not performed first.

(5) Verify vehicle and system operation.
(6) Close hood.

SIDE IMPACT SENSORS

B-PILLAR MOUNTED

(1) Position sensor bracket in vehicle (Fig. 25).
(2) Install the four retaining screws to the impact sensor bracket (Fig. 25). Torque screws to 7 N·m (62 in. lbs.).
(3) Connect the electrical connector (Fig. 25).
(4) Install the B-pillar lower trim for the side of the vehicle that you are replacing the side impact sensor (Refer to 23 - BODY/INTERIOR/B-PILLAR LOWER TRIM - INSTALLATION).

IMPACT SENSOR (Continued)

WARNING: Do not connect the battery negative cable (Refer to 8 - ELECTRICAL/RESTRAINTS - DIAGNOSIS AND TESTING - AIRBAG SYSTEM). Personal injury or death may result if the system test is not performed first.

(5) Verify vehicle and system operation.
(6) Close hood.

SLIDING DOOR OPENING MOUNTED

(1) Connect electrical connector (Fig. 27).
(2) Position sensor in vehicle (Fig. 27).
(3) Install the two retaining screws to the impact sensor (Fig. 27). Torque screws to 7 N·m (62 in. lbs.).

WARNING: Do not connect the battery negative cable (Refer to 8 - ELECTRICAL/RESTRAINTS - DIAGNOSIS AND TESTING - AIRBAG SYSTEM). Personal injury or death may result if the system test is not performed first.

(4) Verify vehicle and system operation.
(5) Close hood.

QUARTER PANEL MOUNTED

(1) Position sensor in vehicle (Fig. 28).
(2) Connect electrical connector (Fig. 28).
(3) Install the two retaining screws to the impact sensor (Fig. 28). Torque screws to 7 N·m (62 in. lbs.).
(4) Install the quarter trim panel for the side of the vehicle that you are replacing the side impact sensor (Refer to 23 - BODY/INTERIOR/QUARTER TRIM PANEL - INSTALLATION).

WARNING: Do not connect the battery negative cable (Refer to 8 - ELECTRICAL/RESTRAINTS - DIAGNOSIS AND TESTING - AIRBAG SYSTEM). Personal injury or death may result if the system test is not performed first.

(5) Verify vehicle and system operation.
(6) Close hood.

KNEE BLOCKER AIRBAG

DESCRIPTION

The Knee Blocker Airbag (Fig. 29) is located on the driver side of the vehicle beneath the instrument panel under steering column cover (Fig. 30).

The knee blocker airbag includes one reaction plate and one load plate, within which the cushion and inflator are mounted and sealed. Following a knee blocker airbag deployment, the knee blocker airbag and instrument panel assembly must be replaced. Refer to the proper diagnostic information for diagnosis and testing.

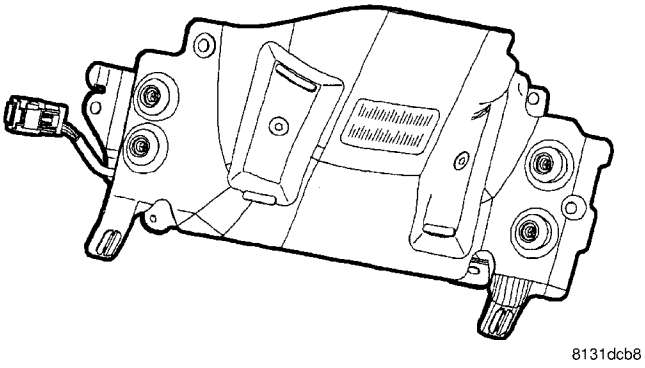

Fig. 29 KNEE BLOCKER AIRBAG

OPERATION

The knee blocker airbag is equipped with a single inflator. When the Occupant Restraint Controller (ORC) sends the proper electrical signals to the initiator, the electrical energy generates enough heat to initiate a small pyrotechnic charge which, in turn ignites chemical pellets within the inflator. Once ignited, these chemical pellets burn rapidly and produce a large quantity of inert gas. The inflator is sealed to the back of the airbag housing and a diffuser in the inflator directs all of the inert gas into the airbag cushion, causing the cushion to inflate. As the cushion inflates, the knee blocker airbag trim deploy. Following an airbag deployment, the airbag cushion quickly deflates by venting the inert gas towards the instrument panel through vent holes within the fabric used to construct the back panel of the airbag cushion.

Some of the chemicals used to create the inert gas may be considered hazardous while in their solid state before they are burned, but they are securely sealed within the airbag inflator. Typically, the potentially hazardous chemicals are burned during an airbag deployment event.

WARNING: The inert gas that is produced when the chemicals are burned is harmless. However, a small amount of residue from the burned chemicals may cause some temporary discomfort if it contacts the skin, eyes, or breathing passages. If skin or eye irritation is noted, rinse the affected area with plenty of cool, clean water. If breathing passages are irritated, move to another area where there is plenty of clean, fresh air to breath. If the irritation is not alleviated by these actions, contact a physician.

KNEE BLOCKER AIRBAG (Continued)

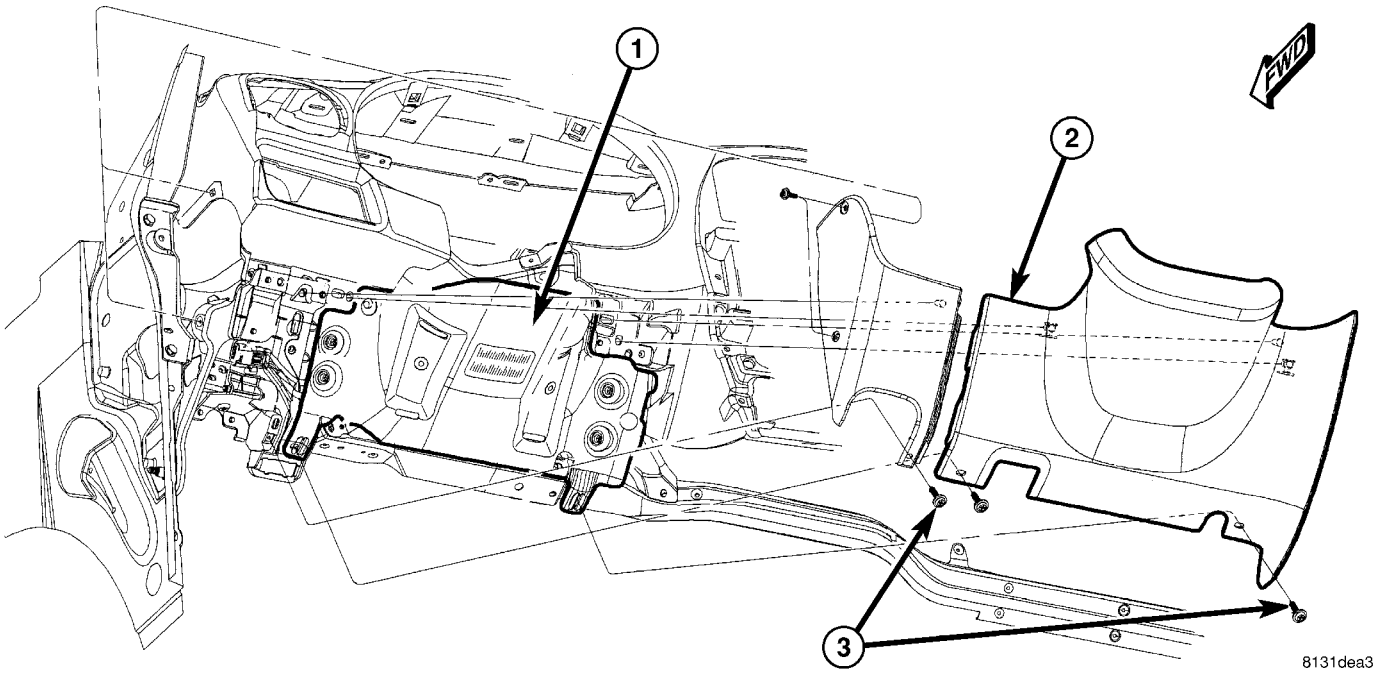

Fig. 30 KNEE BLOCKER AIRBAG LOCATION

1 - KNEE BLOCKER AIRBAG
2 - UNDER STEERING C0LUMN COVER
3 - UNDER STEERING COLUMN COVER RETAINING SCREWS

REMOVAL

(1) Open hood, disconnect and isolate the battery negative cable.
(2)

WARNING: Wait two minutes for the airbag system reserve capacitor to discharge before beginning any airbag system or component service. Failure to do so may result in accidental airbag deployment, personal injury or death.

(3) Remove the steering column opening cover two retaining screws (Fig. 31) and unsnap cover from instrument panel (Refer to 23 - BODY/INSTRUMENT PANEL/STEERING COLUMN OPENING COVER - REMOVAL).
(4) Disconnect the knee blocker airbag electrical connector (Fig. 32).
(5) Remove five knee blocker airbag retaining bolts from airbag (Fig. 33).
(6) Remove knee blocker airbag from vehicle.

INSTALLATION

(1) Place the knee blocker airbag into position in the instrument panel opening (Fig. 33).
(2) Connect the one electrical connector (Fig. 32).
(3) Install the five knee blocker airbag retaining bolts (Fig. 33).
(4) Position the steering column opening cover over retaining slots and firmly snap into place (Fig. 31). Install the two retaining screws (Fig. 31) (Refer to 23 - BODY/INSTRUMENT PANEL/STEERING COLUMN OPENING COVER - INSTALLATION).

WARNING: Do not connect the battery negative cable (Refer to 8 - ELECTRICAL/RESTRAINTS - DIAGNOSIS AND TESTING - AIRBAG SYSTEM). Personal injury or death may result if the system test is not performed first.

(5) Verify vehicle and system operation.
(6) Close hood.

KNEE BLOCKER AIRBAG (Continued)

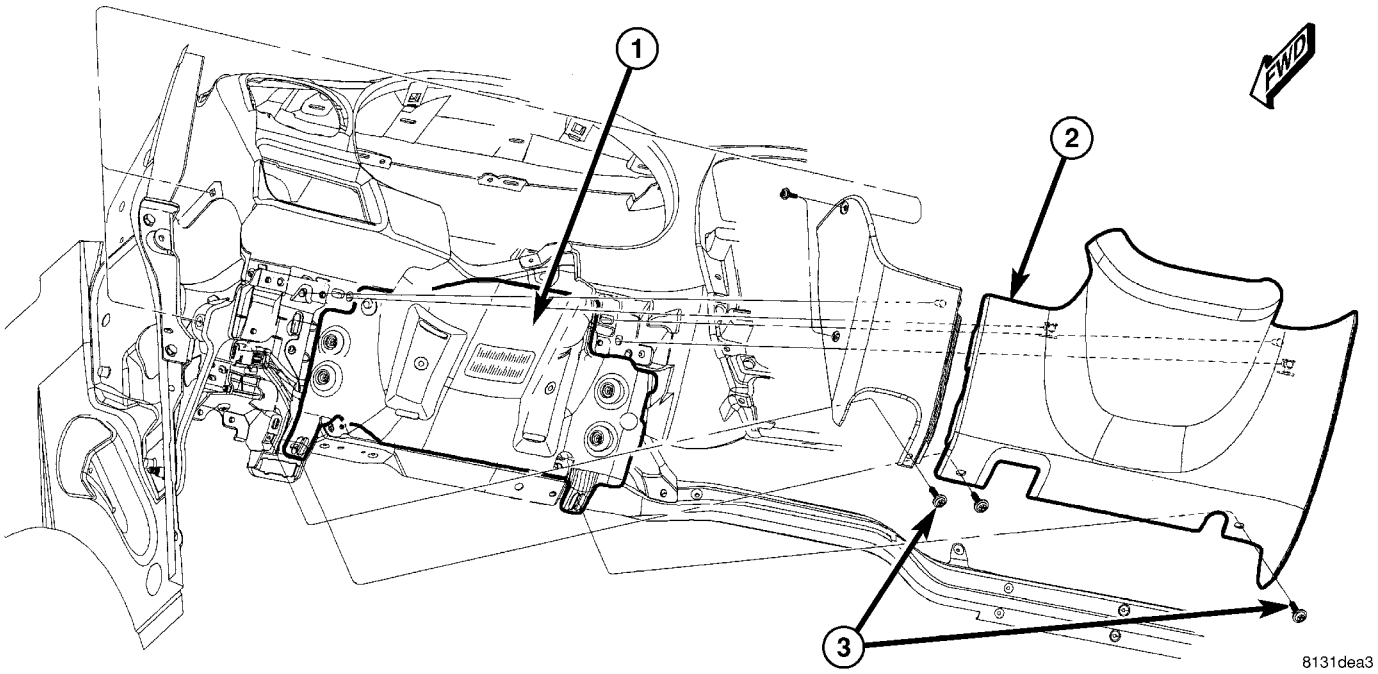

Fig. 31 STEERING COLUMN OPENING COVER

1 - KNEE BLOCKER AIRBAG
2 - UNDER STEERING C0LUMN COVER
3 - UNDER STEERING COLUMN COVER RETAINING SCREWS

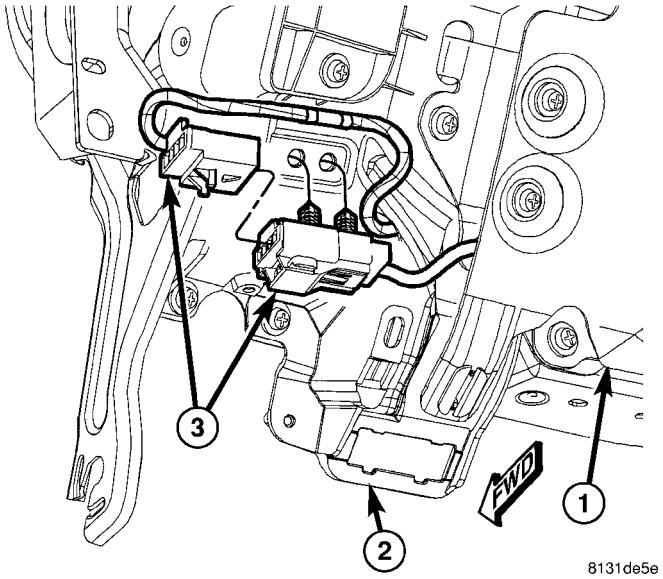

Fig. 32 KNEE BLOCKER AIRBAG ELECTRICAL CONNECTOR

1 - KNEE BLOCKER AIRBAG
2 - INSTRUMENT PANEL
3 - KNEE BLOCKER AIRBAG ELECTRICAL CONNECTOR

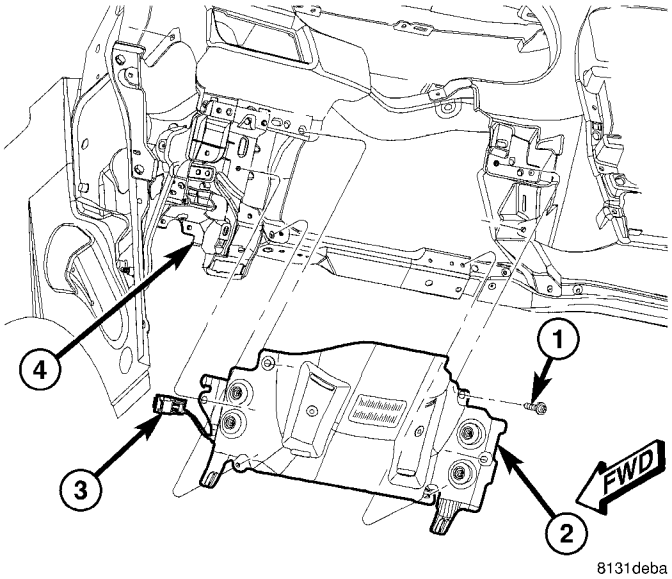

Fig. 33 KNEE BLOCKER AIRBAG - REMOVE/ INSTALL

1 - KNEE BLOCKER AIRBAG RETAINING SCREWS
2 - KNEE BLOCKER AIRBAG
3 - KNEE BLOCKER AIRBAG ELECTRICAL CONNECTOR
4 - INSTRUMENT PANEL

OCCUPANT CLASSIFICATION MODULE

DESCRIPTION

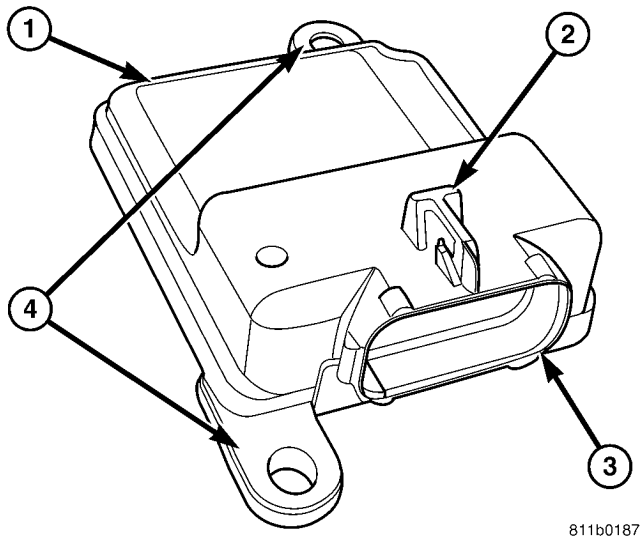

Fig. 34 OCCUPANT CLASSIFICATION MODULE (OCM) - TYPICAL

1 - OCCUPANT CLASSIFICATION MODULE
2 - CONNECTOR LOCK TOWER
3 - CONNECTOR RECEPTACLE
4 - MOUNTING TAB (2)

The Occupant Classification Module (OCM) (Fig. 34) is secured with two screws to a stamped steel mounting bracket welded onto the underside of the passenger front seat cushion frame near the inboard front corner (Fig. 35). Concealed within a hollow in the center of the molded plastic OCM housing is a microprocessor and the other electronic circuitry of the module. The module housing is sealed to enclose and protect the internal electronic circuitry. The OCM software is flash programmable.

A non-calibrated OCM is the only component of the Occupant Classification System (OCS) that is available for separate service replacement. The OCS components of the passenger side front seat cushion including the cushion frame, insulator pad, seat weight bladder and pressure sensor, seat cushion foam, wiring harness and the OCM are a factory-calibrated and assembled unit. Once this unit is connected to a vehicle electrically, the calibration settings are uploaded from the calibrated OCM and stored in the memory of the Occupant Restraint Controller (ORC). If only the OCM is subsequently replaced, the new, non-calibrated OCM learns the proper calibration settings from the ORC after it is connected to the vehicle electrically.

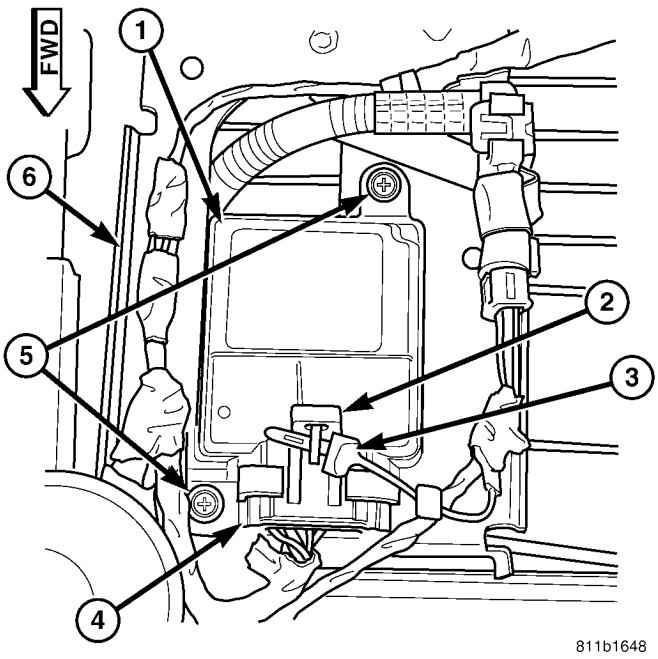

Fig. 35 OCM LOCATION

1 - OCCUPANT CLASSIFICATION MODULE (OCM)
2 - LOCK TOWER
3 - LOCK PIN
4 - CONNECTOR
5 - SCREW (2)
6 - BRACKET

The OCM cannot be adjusted or repaired and, if damaged or faulty, it must be replaced. The components of the passenger front seat cushion are serviced only as a factory-calibrated, assembled and tamper-evident unit. Only the OCM and the seat cushion trim are available for separate service replacement. Once a service replacement package has been installed in a vehicle, the OCM can thereafter be serviced only by replacing the entire passenger front seat cushion with another complete service replacement package.

OPERATION

The microprocessor in the Occupant Classification Module (OCM) contains the Occupant Classification System (OCS) logic circuits. The OCM uses On-Board Diagnostics (OBD) and can communicate with other electronic modules in the vehicle as well as with a scan tool using the Programmable Communications Interface (PCI) data bus network. This method of communication is also used for OCS diagnosis and testing through the 16-way Data Link Connector (DLC), located on the driver side lower edge of the instrument panel.

The OCM provides a nominal five volts to both the pressure sensor of the seat weight bladder beneath the passenger front seat cushion and to the belt tension sensor on the passenger front seat belt lower

OCCUPANT CLASSIFICATION MODULE (Continued)

anchor. The OCM then monitors the return voltage from each of the sensors. The bladder pressure sensor input allows the OCM to determine whether the passenger front seat is occupied and the relative size of the occupant by providing a weight-sensing reference to the load on the seat cushion. The belt tension sensor provides an additional logic input to the OCM microprocessor that allows it to distinguish between the lower seat belt cinch loads of a belted occupant and the higher loads associated with a belted child seat.

Pre-programmed decision algorithms and OCS calibration allow the OCM microprocessor to determine when the seat cushion load as signaled by the bladder pressure sensor and the seat belt cinch load as signaled by the belt tension sensor indicate that passenger airbag protection is appropriate. When the programmed conditions are met, the OCM sends the proper electronic occupant classification messages over the PCI data bus to the Occupant Restraint Controller (ORC), and the ORC enables or disables the deployment circuits for the passenger front supplemental restraints. The ORC also provides a control output for the Passenger Airbag Disabled (PAD) indicator in the instrument panel center stack, based upon the electronic occupant classification messages it receives from the OCM.

The OCM microprocessor continuously monitors all of the OCS electrical circuits and components to determine the system readiness. If the OCM detects a monitored system fault, it sets an active and stored Diagnostic Trouble Code (DTC) and sends the appropriate electronic messages to the ORC over the PCI data bus. Then the ORC sets a DTC and sends messages to control the airbag indicator operation accordingly. An active fault only remains for the duration of the fault, or in some cases for the duration of the current ignition switch cycle, while a stored fault causes a DTC to be stored in memory by the OCM and the ORC. For some DTC's, if a fault does not recur for a number of ignition cycles, the OCM will automatically erase the stored DTC. For other internal faults, the stored DTC is latched forever.

The OCM receives battery current from an IPM high side driver (Run/Start). The OCM receives ground through a ground circuit of the body wire harness, which it shares with the ORC. These connections allow the OCM to be operational whenever the ignition switch is in the Start or ON positions.

To diagnose and test the OCS, use a scan tool and the appropriate diagnostic information.

REMOVAL

Once any of the original factory-installed components except the Occupant Classification Module (OCM) have been replaced with the service replacement package components, the OCM can only be serviced by replacing the entire passenger front seat cushion unit with another complete service replacement package (Refer to 23 - BODY/SEATS/SEAT CUSHION - FRONT - REMOVAL).

WARNING: Never replace both the Occupant Restraint Controller (ORC) and the Occupant Classification Module (OCM) at the same time. If both require replacement, replace one, then perform the Airbag System test (Refer to 8 - ELECTRICAL/RESTRAINTS - DIAGNOSIS AND TESTING - AIRBAG SYSTEM) before replacing the other. Both the ORC and the OCM store Occupant Classification System (OCS) calibration data, which they transfer to one another when one of them is replaced. If both are replaced at the same time, an irreversible fault will be set in both modules and the OCS may malfunction and result in personal injury or death.

(1) Disconnect and isolate the battery negative cable.
(2)

WARNING: Wait two minutes for the airbag system reserve capacitor to discharge before beginning any airbag system or component service. Failure to do so may result in accidental airbag deployment, personal injury or death.

(3) Reach under the front edge of the passenger side front seat cushion to access and remove the lock pin from the connector lock tower on the Occupant Classification Module (OCM) (Fig. 36).
(4) Disconnect the passenger front seat wire harness connector for the OCM.
(5) Remove the two screws that secure the OCM to the OCM bracket.
(6) Remove the OCM from under the passenger front seat.

INSTALLATION

WARNING: To avoid personal injury or death on vehicles equipped with the Occupant Classification System (OCS), only the Occupant Classification Module (OCM) and the seat cushion trim may be serviced separately. All other components of the passenger front seat cushion must be serviced only as a complete factory-calibrated, assembled and tamper-evident service replacement package.

Once any of the original factory-installed components except the OCM have been replaced with the service replacement package components, the OCM can only be serviced by replacing the entire passen-

OCCUPANT CLASSIFICATION MODULE (Continued)

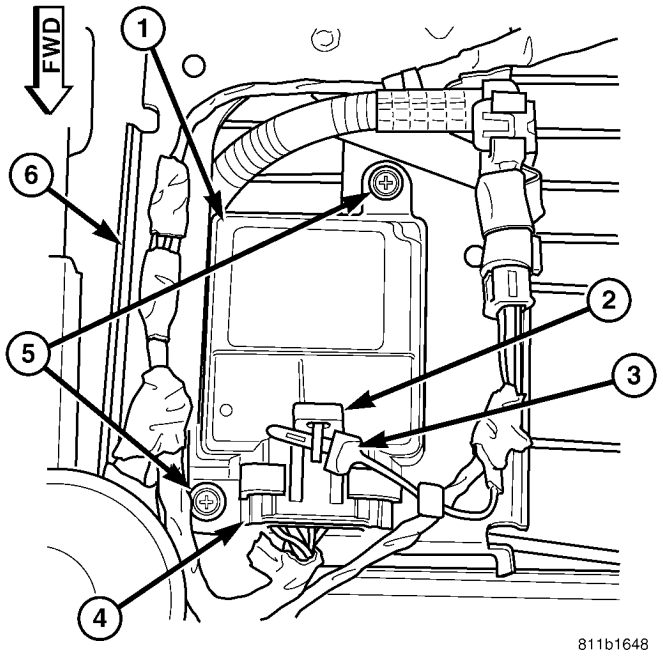

Fig. 36 OCM - REMOVE/INSTALL

1 - OCCUPANT CLASSIFICATION MODULE (OCM)
2 - LOCK TOWER
3 - LOCK PIN
4 - CONNECTOR
5 - SCREW (2)
6 - BRACKET

ger side front seat cushion unit with another complete service replacement package. (Refer to 23 - BODY/SEATS/SEAT CUSHION - FRONT - REMOVAL).

WARNING: Never replace both the Occupant Restraint Controller (ORC) and the Occupant Classification Module (OCM) at the same time. If both require replacement, replace one, then perform the Airbag System test (Refer to 8 - ELECTRICAL/RESTRAINTS - DIAGNOSIS AND TESTING - AIRBAG SYSTEM) before replacing the other. Both the ORC and the OCM store Occupant Classification System (OCS) calibration data, which they transfer to one another when one of them is replaced. If both are replaced at the same time, an irreversible fault will be set in both modules and the OCS may malfunction may result in personal injury or death.

(1) Carefully position the Occupant Classification Module (OCM) to the OCM bracket (Fig. 36). When the OCM is correctly positioned, the connector on the module will be pointed to right side of the vehicle.

(2) Install the two screws to the OCM. Torque the screws to 2 N·m (20 in. lbs.).

(3) Connect the seat wire harness connector for the OCM. Be certain that the latches on the connector are each fully engaged.

(4) Install the lock pin into the connector lock tower on the OCM.

WARNING: Do not connect the battery negative cable (Refer to 8 - ELECTRICAL/RESTRAINTS - DIAGNOSIS AND TESTING - AIRBAG SYSTEM). Personal injury or death may result if the system test is not performed first.

WARNING: Following successful completion of the Airbag System test procedure, the Occupant Classification System Verification Test must be done using a scan tool and the appropriate diagnostic information.

(5) Verify vehicle and system operation.
(6) Close hood.

OCCUPANT RESTRAINT CONTROLLER

DESCRIPTION

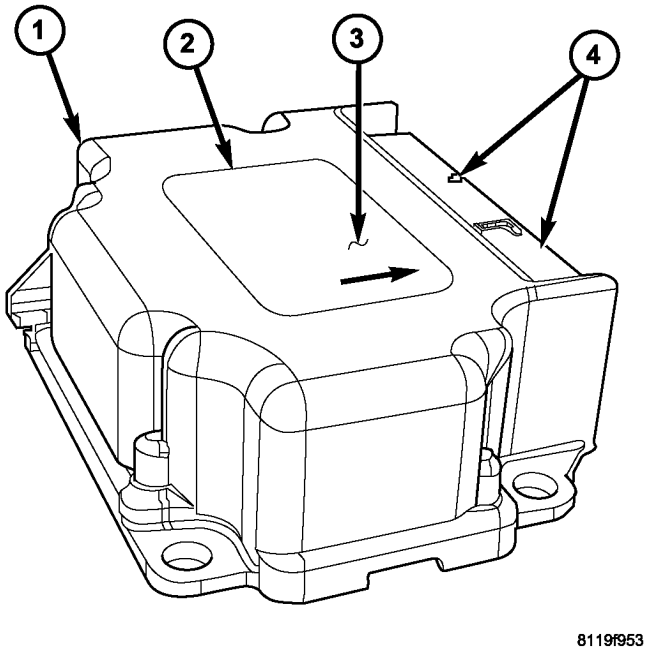

Fig. 37 OCCUPANT RESTRAINT CONTROLLER - TYPICAL

1 - ORC
2 - ORIENTATION ARROW UPON INSTALLATION
3 - LABEL
4 - ORC ELECTRICAL CONNECTORS

The Occupant Restraint Controller (ORC) (Fig. 37) is also sometimes referred to as the Airbag Control Module (ACM).

OCCUPANT RESTRAINT CONTROLLER (Continued)

The ORC is secured with screws to a stamped steel mounting bracket welded onto the top of the floor panel transmission tunnel just behind and underneath the instrument panel center stack in the passenger compartment of the vehicle (Fig. 38). Concealed within a hollow in the center of the die cast aluminum ORC housing is the electronic circuitry of the ORC which includes a microprocessor, an electronic impact sensor, an electronic safing sensor, and an energy storage capacitor. A stamped metal cover plate is secured to the bottom of the ORC housing with four screws to enclose and protect the internal electronic circuitry and components.

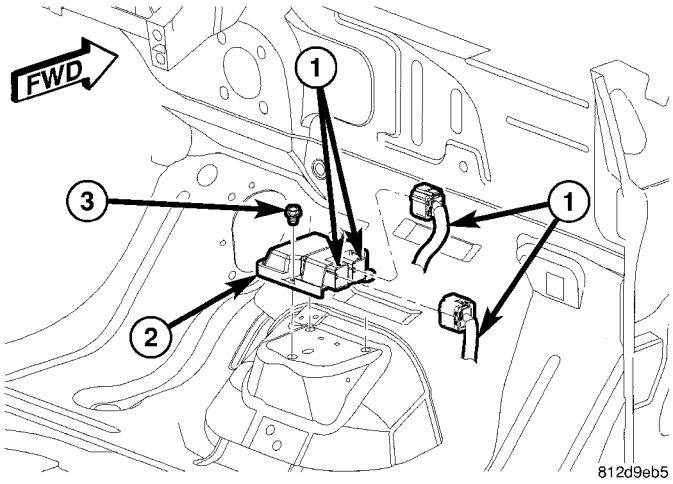

Fig. 38 ORC LOCATION

1 - ORC ELECTRICAL CONNECTORS
2 - ORC
3 - ORC MOUNTING SCREWS

An arrow printed on the label on the top of the ORC housing provides a visual verification of the proper orientation of the unit, and should always be pointed toward the front of the vehicle. The ORC housing has integral mounting flanges. the ORC has two molded plastic electrical connectors that exits the right facing side of the ORC housing. These terminal pins connect the ORC to the vehicle electrical system.

The impact sensor and safing sensor internal to the ORC are calibrated for the specific vehicle, and are only serviced as a unit with the ORC. In addition, there are unique versions of the ORC for vehicles with or without curtain airbags. The ORC cannot be repaired or adjusted and, if damaged or faulty, it must be replaced.

OPERATION

The microprocessor in the Occupant Restraint Controller (ORC) contains the supplemental restraint system logic circuits and controls all of the supplemental restraint system components. The ORC uses On-Board Diagnostics (OBD) and can communicate with other electronic modules in the vehicle as well as with the diagnostic scan tool using the Programmable Communication Interface (PCI) data bus. This method of communication is used for control of the airbag indicator in the ElectroMechanical Instrument Cluster (EMIC) and for supplemental restraint system diagnosis and testing through the 16-way Data Link Connector (DLC) located on the driver side lower edge of the instrument panel.

The ORC microprocessor continuously monitors all of the supplemental restraint system electrical circuits to determine the system readiness. If the ORC detects a monitored system fault, it sets an active and stored Diagnostic Trouble Code (DTC) and sends electronic messages to the EMIC over the PCI data bus to turn on the airbag indicator. An active fault only remains for the duration of the fault, or in some cases for the duration of the current ignition switch cycle, while a stored fault causes a DTC to be stored in memory by the ORC. For some DTC's, if a fault does not recur for a number of ignition cycles, the ORC will automatically erase the stored DTC. For other internal faults, the stored DTC is latched forever.

On models equipped with the Occupant Classification System (OCS), the ORC communicates with the Occupant Classification Module (OCM) over the PCI data bus. The ORC will internally disable the passenger airbag and seat belt tensioner deployment circuits if the OCM detects that the passenger side front seat is unoccupied or that it is occupied by a load that is inappropriate for an airbag deployment. The ORC also provides a control output to the Passenger Airbag Disabled (PAD) indicator through the passenger airbag indicator driver circuit. The OCM notifies the ORC when it has detected a monitored system fault and stored a DTC in its memory for any faulty OCS component or circuit, then the ORC sets a DTC and controls the airbag indicator operation accordingly.

The ORC receives battery current through two circuits; a fused ignition switch output (RUN) circuit through a fuse in the Junction Block (JB), and a fused ignition switch output (RUN/START) circuit through a second fuse in the JB. The ORC receives ground through a ground circuit of the instrument panel wire harness. These connections allow the ORC to be operational whenever the ignition switch is in the START or ON positions.

The ORC also contains an energy-storage capacitor. When the ignition switch is in the START or ON positions, this capacitor is continually being charged with enough electrical energy to deploy the front supplemental restraint components for up to one second following a battery disconnect or failure. The purpose of the capacitor is to provide backup supplemental

OCCUPANT RESTRAINT CONTROLLER (Continued)

restraint system protection in case there is a loss of battery current supply to the ORC during an impact.

Two sensors are contained within the ORC, an electronic impact sensor and a safing sensor. The ORC also monitors inputs from eight remote impact sensors. Two front impact sensors are located on each outboard side of the lower radiator support, and three side impact sensors are located on each side of the vehicle at the B-pillar, in the lower sliding door opening in front of the C-pillar, and over the rear wheel well between the C and D-pillars. The electronic impact sensors are accelerometers that sense the rate of vehicle deceleration, which provides verification of the direction and severity of an impact.

The safing sensor is an electronic accelerometer sensor within the ORC that provides an additional logic input to the ORC microprocessor. The safing sensor is used to verify the need for a supplemental restraint deployment by detecting impact energy of a lesser magnitude than that of the primary electronic impact sensors, and must exceed a safing threshold in order for the airbags to deploy. Vehicles equipped with curtain airbags, there is a second safing sensor within the ORC to provide confirmation to the ORC microprocessor of side impact forces. This second safing sensor is a bi-directional unit that detects impact forces from either side of the vehicle.

Pre-programmed decision algorithms in the ORC microprocessor determine when the deceleration rate as signaled by the impact sensors and the safing sensors indicate an impact that is severe enough to require supplemental restraint system protection and, based upon the severity of the monitored impact, determines the level of front airbag deployment force required for each front seating position. When the programmed conditions are met, the ORC sends the proper electrical signals to deploy the dual multistage front airbags at the programmed force levels, the front seat belt tensioners and, if the vehicle is so equipped, either curtain airbag. For vehicles equipped with the OCS, the passenger front airbag and seat belt tensioner will be deployed by the ORC only if enabled by the OCM messages (PAD indicator OFF) at the time of the impact.

To diagnose and test the ORC and all airbag system components, use a scan tool and the appropriate diagnostic information.

REMOVAL

WARNING: Never replace both the Occupant Restraint Controller (ORC) and the Occupant Classification Module (OCM) at the same time. If both require replacement, replace one, then perform the Airbag System test (Refer to 8 - ELECTRICAL/RESTRAINTS - DIAGNOSIS AND TESTING - AIRBAG SYSTEM) before replacing the other. Both the ORC and the OCM store Occupant Classification System (OCS) calibration data, which they transfer to one another when one of them is replaced. If both are replaced at the same time, an irreversible fault will be set in both modules and the OCS may malfunction and result in personal injury or death.

(1) Disconnect and isolate the battery negative cable.

(2)

WARNING: Wait two minutes for the airbag system reserve capacitor to discharge before beginning any airbag system or component service. Failure to do so may result in accidental airbag deployment, personal injury or death.

(3) Remove storage bin from instrument panel (Refer to 23 - BODY/INSTRUMENT PANEL/STORAGE BIN - REMOVAL).

(4) Remove three bolts holding ORC to floor bracket (Fig. 39).

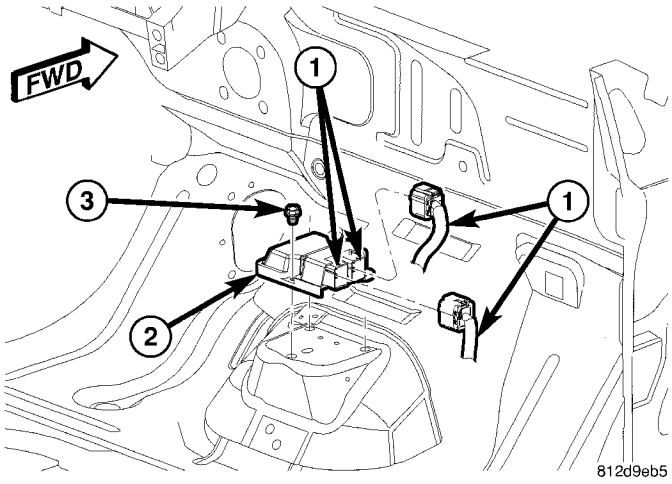

Fig. 39 ORC - REMOVE/INSTALL

1 - ORC ELECTRICAL CONNECTORS
2 - ORC
3 - ORC MOUNTING SCREWS

(5) Disconnect the wire connectors from the ORC (Fig. 39).

(6) Remove the ORC from vehicle.

INSTALLATION

WARNING: Do not install ORC if mounting location is deformed or damaged. This will cause the ORC to be improperly located and could result in occupant personal injury or death.

WARNING: Use correct screws when installing the ORC.

OCCUPANT RESTRAINT CONTROLLER (Continued)

WARNING: Never replace both the Occupant Restraint Controller (ORC) and the Occupant Classification Module (OCM) at the same time. If both require replacement, replace one, then perform the Airbag System test (Refer to 8 - ELECTRICAL/RESTRAINTS - DIAGNOSIS AND TESTING - AIRBAG SYSTEM) before replacing the other. Both the ORC and the OCM store Occupant Classification System (OCS) calibration data, which they transfer to one another when one of them is replaced. If both are replaced at the same time, an irreversible fault will be set in both modules and the OCS may malfunction and result in personal injury or death.

(1) Install the ORC into vehicle (Fig. 39).
(2) Connect the wire connector to the ORC (Fig. 39).
(3) Install three bolts holding ORC to floor bracket (Fig. 39). Torque bolts to 7.3 - 9.6 N·m (65 to 85 in. lbs.)
(4) Install the storage bin onto the instrument panel (Refer to 23 - BODY/INSTRUMENT PANEL/ STORAGE BIN - INSTALLATION).

WARNING: Do not connect the battery negative cable (Refer to 8 - ELECTRICAL/RESTRAINTS - DIAGNOSIS AND TESTING - AIRBAG SYSTEM). Personal injury or death may result if the system test is not performed first.

(5) Verify vehicle and system operation.
(6) Close hood.

PASSENGER AIRBAG

DESCRIPTION

WARNING: Never disassemble the passenger airbag. The passenger airbag has no serviceable parts. If tampered with internally, the airbag could deploy and result in personal injury or death.

The Passenger Airbag is located beneath the instrument panel and pad assembly. The airbag is mounted to the back side of the instrument panel reinforcement.

The instrument panel top pad is the most visible part of the passenger airbag system. Located under the instrument panel top pad are the airbag door, the passenger airbag cushion and the airbag cushion supporting components.

The passenger airbag includes a magnesium housing within which the cushion and inflator are mounted and sealed.

Following a passenger airbag deployment, the passenger airbag and the instrument panel must be replaced. The passenger airbag cannot be repaired, and must be replaced if deployed or damaged in any way.

OPERATION

The passenger airbag is equipped with two inflators, each with three levels of pressure output. The inflators seal the hole in the airbag cushion so it can discharge the gas it produces directly into the cushion when supplied with the proper electrical signal. Following an airbag deployment, the airbag cushion quickly deflates by venting this gas through the cushion material towards the instrument panel.

The passenger airbag is secured with screws to the instrument panel beneath the instrument panel top pad and above the glove box opening. The instrument panel top pad above the glove box opening conceals the airbag door and a predetermined hinge line beneath its decorative cover. Upon airbag deployment, the top pad will bend at the hinge line and the door will fold back out of the way onto the top of the instrument panel.

When the front airbag system is deployed, the following **MUST** be replaced:

- Complete Steering Column Assembly.
- Lower Steering Column Coupler.
- Steering Wheel.
- Clock Spring.
- Driver Airbag.
- Passenger Airbag.
- Upper Instrument Panel with Pad.

CARE OF UNDEPLOYED AIRBAGS

Airbags must be stored in their original special container until used for service. At no time should a source of electricity be permitted near the inflator on the back of an airbag. When carrying or handling an undeployed airbag, the trim side of the airbag should be pointing away from the body to minimize possibility of injury if accidental deployment occurs. Do not place undeployed airbag face down on a solid surface, the airbag will propel into the air if accidental deployment occurs.

REMOVAL

DEPLOYED AIRBAG

(1) Open hood.
(2) Disconnect and isolate the battery negative cable.
(3)

PASSENGER AIRBAG (Continued)

WARNING: Wait two minutes for the airbag system reserve capacitor to discharge before beginning any airbag system or component service. Failure to do so may result in accidental airbag deployment, personal injury or death.

(4) Clean powder residue from interior of vehicle (Refer to 8 - ELECTRICAL/RESTRAINTS - STANDARD PROCEDURE - SERVICE AFTER AN AIRBAG DEPLOYMENT).
(5) Remove instrument panel (Refer to 23 - BODY/INSTRUMENT PANEL/INSTRUMENT PANEL ASSEMBLY - REMOVAL).
(6) Remove all reusable components from the upper instrument panel and transfer to the new instrument panel.

UNDEPLOYED AIRBAG

(1) Open hood.
(2) Disconnect and isolate the battery negative cable.
(3)

WARNING: Wait two minutes for the airbag system reserve capacitor to discharge before beginning any airbag system or component service. Failure to do so may result in accidental airbag deployment, personal injury or death.

(4) Remove center console bin between front seats.
(5) Remove left front door sill plate using a trim stick (special tool #C-4755) or equivalent, and gently prying up on sill plate.
(6) Remove left cowl panel using a trim stick or equivalent, and gently prying out on cowl panel.
(7) Remove four screws to lower steering column cover and remove cover.
(8) Unsnap parking brake lever from knee blocker reinforcement.
(9) Remove Data Link Connector (DLC) from knee blocker.
(10) Remove screws to knee blocker.
(11) Unsnap left A-pillar lower extension trim using a trim stick or equivalent.
(12) Remove three left side instrument panel A-pillar retaining bolts and loosen the instrument panel roll down bolt.
(13) Remove four nuts at brake pedal support bracket to instrument panel.
(14) Using a trim stick or equivalent, gently pry off left side upper A-pillar trim.
(15) Remove six screws and two wiring connectors to lower instrument panel cubby bin at bottom of center stack.
(16) Remove two left side nuts at instrument panel center stack support to floor.
(17) Remove two right side nuts at instrument panel center stack support to floor.
(18) Remove right front door sill plate using a trim stick or equivalent, and gently prying up on sill plate.
(19) Remove right cowl panel using a trim stick or equivalent, and gently prying out on cowl panel.
(20) Using a trim stick or equivalent, gently pry out on right instrument panel end cap.
(21) Unsnap right A-pillar lower extension trim using a trim stick or equivalent.
(22) Remove three right side instrument panel A-pillar retaining bolts and loosen the instrument panel roll down bolt.
(23) Using a trim stick or equivalent, gently pry off right side upper A-pillar trim.
(24) Open glove box, pinch in sides and roll down towards floor. With a firm pull, snap glove box door off hinges and remove.
(25) Using a trim stick or equivalent, gently pry up on rear of instrument panel top cover and then pull rearward and out.
(26) Using a trim stick or equivalent, gently pry off the filler bezel just above the cup holder to expose the lower screws to center bezel.
(27) Remove two screws and then using a trim stick or equivalent, gently pry off instrument panel center bezel.
(28) Remove center bezel wiring connectors to HVAC control and switch assembly (hazard, rear wiper/washer, heated seats) and remove bezel.
(29) Slide cup holder assembly from instrument panel.
(30) Remove nineteen screws to right lower instrument panel trim (glove box surround), unplug glove box lamp wire connector, and remove panel.
(31) Remove four screws and wiring connectors to radio and remove radio.
(32) Remove one far left instrument panel speaker retaining screw.
(33) Remove four screws along top front edge of instrument panel cover/pad.
(34) Remove seven lower instrument panel cover/pad retaining screws starting from right of vehicle and only removing these seven, not all of them.
(35) Remove six upper fence line instrument panel retaining bolts.
(36) Roll back instrument panel just enough to increase access to the passenger airbag retaining bolts at the reinforcement. Lift the instrument panel up slightly so as not to damage the air distribution to HVAC unit seal.
(37) Disconnect the passenger airbag electrical connector. Using a trim stick or equivalent, gently pry electrical connector off of instrument panel reinforcement.

PASSENGER AIRBAG (Continued)

(38) Remove the two passenger airbag to instrument panel cover/pad retaining screws.

(39) Remove the three passenger airbag to instrument panel reinforcement retaining bolts.

(40) Pull rearward slightly on the instrument panel cover/pad to maneuver passenger airbag out from reinforcement and instrument panel.

INSTALLATION

DEPLOYED AIRBAG

Transfer all reusable components to the new instrument panel.

(1) Install new Passenger Airbag into instrument panel.

(2) Install airbag attaching bolts to the instrument panel.

(a) Torque the two bolts at instrument panel retainer bosses to 2.7 ± .5 N·m (24 ± 5 in. lbs.).

(b) Torque the three bolts that attach the passenger airbag to cross-car beam to 10 ± 2 N·m (90 ± 15 in. lbs.).

(3) Connect yellow wire connector to passenger airbag and affix connector to instrument panel reinforcement with push pins.

(4) Install Instrument panel (Refer to 23 - BODY/ INSTRUMENT PANEL/INSTRUMENT PANEL ASSEMBLY - INSTALLATION).

WARNING: Do not connect the battery negative cable (Refer to 8 - ELECTRICAL/RESTRAINTS - DIAGNOSIS AND TESTING - AIRBAG SYSTEM). Personal injury or death may result if the system test is not performed first.

UNDEPLOYED AIRBAG

(1) Pull rearward slightly on the instrument panel cover/pad to maneuver passenger airbag up onto reinforcement and instrument panel.

(2) Install the three passenger airbag to instrument panel reinforcement retaining bolts but leave loose. This will help align the passenger airbag for the cover/pad fit.

(3) Install the two passenger airbag to instrument panel cover/pad retaining screws. Torque screws to 2.7 ±.5 N·m (24 ± 5 in. lbs.).

NOTE: Insure that the instrument panel cover/pad locator pins are indexed properly at center stack area prior to reassembly.

(4) Tighten the three passenger airbag to instrument panel reinforcement retaining bolts. Torque bolts to 10 ± 2 N·m (90 ± 15 in. lbs.).

(5) Connect the passenger airbag electrical connector. Install the connector onto the instrument panel reinforcement with the push-pin fasteners.

(6) Roll the instrument panel forward lifting slightly so as to seat the instrument panel air distribution duct on top of the HVAC unit properly to avoid any leaks or damage to the seal.

(7) Install six upper fence line instrument panel retaining bolts.

(8) Install three right side instrument panel A-pillar retaining bolts and tighten the right instrument panel roll down bolt. Install the smaller 10 mm bolt first to align the instrument panel properly.

(9) Install three left side instrument panel A-pillar retaining bolts and tighten the left instrument panel roll down bolt. Install the smaller 10 mm bolt first to align the instrument panel properly.

(10) Install seven lower instrument panel cover/ pad retaining screws.

(11) Install four screws along top front edge of instrument panel cover/pad.

(12) Install one far left instrument panel speaker retaining screw.

(13) Install wiring connectors to radio. Install radio and four retaining screws.

(14) Connect glove box lamp wiring connector and place right lower instrument panel trim (glove box surround) into position.

(15) Install nineteen right lower instrument panel trim (glove box surround) and install panel screws.

(16) Slide cup holder assembly into instrument panel.

(17) Install center bezel wiring connectors to HVAC control and switch assembly (hazard, rear wiper/washer, heated seats).

(18) Install instrument panel center bezel by aligning slots and firmly snapping into place.

(19) Install two screws to instrument panel center bezel.

(20) Align filler bezel above cup holder over retaining slots and firmly snap into place.

(21) Place instrument panel top cover into position and firmly snap down rear edge of top cover.

(22) Install glove box. Align hinges, snap into place, roll glove box upwards and push in sides to fully install.

(23) Align right side upper A-pillar trim over retaining slots and firmly snap into place.

(24) Align right A-pillar lower extension trim over retaining slots and firmly snap into place.

(25) Align right instrument panel end cap over retaining slots and firmly snap into place.

(26) Align right cowl panel over retaining slots and firmly snap into place.

(27) Align right front door sill plate over retaining slots and firmly snap into place.

PASSENGER AIRBAG (Continued)

(28) Install two right side nuts at instrument panel center stack support to floor.
(29) Install two left side nuts at instrument panel center stack support to floor.
(30) Connect the two wiring connectors to lower instrument panel cubby bin at bottom of center stack and install six screws.
(31) Align left side upper A-pillar trim over retaining slots and firmly snap into place.
(32) Install four nuts at brake pedal support bracket to instrument panel.
(33) Align left A-pillar lower extension trim over retaining slots and firmly snap into place.
(34) Install knee blocker and retaining screws.
(35) Install Data Link Connector (DLC) into bottom of knee blocker.
(36) Align parking brake lever and snap into place on knee blocker reinforcement.
(37) Install lower steering column cover and four retaining screws
(38) Align left cowl panel over retaining slots and firmly snap into place.
(39) Align left front door sill plate over retaining slots and firmly snap into place.
(40) Install center console bin between front seats.

WARNING: Do not connect the battery negative cable (Refer to 8 - ELECTRICAL/RESTRAINTS - DIAGNOSIS AND TESTING - AIRBAG SYSTEM). Personal injury or death may result if the system test is not performed first.

(41) Close hood.
(42) Verify system and vehicle operation.

PASSENGER AIRBAG DISABLED INDICATOR

DESCRIPTION



Fig. 40 PASSENGER AIRBAG DISABLED (PAD) INDICATOR

Vehicles equipped with the Occupant Classification System (OCS) include a Passenger Airbag Disabled (PAD) indicator (Fig. 40) which is located in the instrument panel center stack, above the radio. The PAD indicator is present only in vehicles equipped with the OCS.

The PAD indicator consists of a molded plastic housing with an integral connector at the back. An amber Light Emitting Diode (LED) behind the lens causes the “PASS AIR BAG OFF” text and icon to appear silhouetted against an amber field through the translucent lens when the indicator is illuminated from behind by the LED. The PAD indicator is available for separate service replacement.

OPERATION

In vehicles equipped with the Occupant Classification System (OCS), the Passenger Airbag Disabled (PAD) indicator gives an indication when the passenger airbag and seat belt tensioner deployment circuits are disabled by the Occupant Restraint Controller (ORC). The PAD indicator is controlled by a transistor within the ORC through a hard wired output based upon ORC programming and electronic occupant classification messages received by the ORC over the Programmable Communications Interface (PCI) data bus from the Occupant Classification Module (OCM). The PAD indicator Light Emitting Diode (LED) is completely controlled by the ORC. The LED receives a battery current input on the fused ignition switch output (RUN/START) circuit. Therefore, the LED will always be OFF when the ignition switch is in any position except ON or START. The LED only illuminates when it is provided a path to ground by the ORC transistor. The ORC will turn on the PAD indicator for the following reasons:

- **Bulb Test** - Each time the ignition switch is turned to the ON position the PAD indicator is illuminated for about six seconds.
- **Child Seat Detected Occupant Classification Message** - Each time the ORC receives a message from the OCM indicating a child seat has been detected in the passenger front seat, the passenger airbag and seat belt tensioner deployment circuits are deactivated and the PAD indicator will be illuminated. The indicator remains illuminated until the ORC receives an occupant classification message indicating that:
  - The passenger front seat is empty.
  - The seat is occupied by a load equal to or greater than a fifth percentile female.
  - **OR,** Until the ignition switch is turned to the OFF position, whichever of these three occurs first.
- **Load Less Than Fifth Percentile Female Occupant Classification Message** - Each time the ORC receives a message from the OCM indicating that a load less than a fifth percentile female has been detected in the passenger front seat, the passenger airbag and seat belt tensioner deployment circuits are deactivated and the PAD indicator will be illuminated. The indicator remains illuminated until:

PASSENGER AIRBAG DISABLED INDICATOR (Continued)

- The ORC receives an occupant classification message indicating that the passenger front seat is empty.
- The seat is occupied by a load equal to or greater than a fifth percentile female.
- **OR**, until the ignition switch is turned to the OFF position, whichever of these three occurs first.

• **Load Undetermined Occupant Classification Message** - Each time the ORC receives a message from the OCM indicating that a load cannot be determined in the passenger front seat, the passenger airbag and seat belt tensioner deployment circuits are deactivated and the PAD indicator will be illuminated. The indicator remains illuminated until:

- The ORC receives an occupant classification message indicating that the passenger front seat is empty.
- The seat is occupied by a load equal to or greater than a fifth percentile female.
- **OR**, until the ignition switch is turned to the OFF position, whichever of these three occurs first.

• **Communication Error** - If the ORC receives invalid occupant classification messages or no messages from the OCM, the PAD indicator is illuminated. The indicator remains illuminated until:

- The ORC receives an occupant classification message indicating that the passenger front seat is empty.
- The seat is occupied by a load equal to or greater than a fifth percentile female.
- **OR**, until the ignition switch is turned to the OFF position, whichever of these three occurs first.

The ORC continually monitors the occupant classification messages from the OCM to decide whether the passenger airbag and seat belt tensioner deployment circuits should be activated or deactivated. Note that there may be several seconds of delay between changes in the detected occupant status and PAD indications. This is a programmed feature of the OCM used to prevent a flashing indicator condition resulting from the normal shifting of occupant weight on the passenger seat cushion. The ORC then provides the proper control output to turn the PAD indicator ON or OFF.

The ORC will store a Diagnostic Trouble Code (DTC) for any malfunction it detects. For proper diagnosis of the OCM, the ORC, the PCI data bus, or the electronic message inputs to the ORC that control the PAD indicator, use a scan tool and the appropriate diagnostic information.

REMOVAL

(1) Open hood.
(2) Disconnect and isolate the battery negative cable.
(3)

WARNING: Wait two minutes for the airbag system reserve capacitor to discharge before beginning any airbag system or component service. Failure to do so may result in accidental airbag deployment, personal injury or death.

(4) Remove instrument panel center bezel (Refer to 23 - BODY/INSTRUMENT PANEL/INSTRUMENT PANEL CENTER BEZEL - REMOVAL).
(5) From the back of the center bezel, depress the two latches toward the indicator housing and push the indicator out through the face of the center bezel.

INSTALLATION

(1) From the face of the instrument panel center bezel, align the Passenger Airbag Disabled (PAD) indicator housing with the mounting hole.
(2) Firmly push the indicator into the center bezel until the two latches are fully engaged on the back of the cap and are snapped in.
(3) Install the instrument panel center bezel (Refer to 23 - BODY/INSTRUMENT PANEL/INSTRUMENT PANEL CENTER BEZEL - INSTALLATION).

WARNING: Do not connect the battery negative cable (Refer to 8 - ELECTRICAL/RESTRAINTS - DIAGNOSIS AND TESTING - AIRBAG SYSTEM). Personal injury or death may result if the system test is not performed first.

WARNING: Following successful completion of the Airbag System test procedure, the Occupant Classification System Verification Test must be done using a scan tool and the appropriate diagnostic information.

(4) Close hood.
(5) Verify system and vehicle operation.

SEAT BELT BUCKLE - FRONT INBOARD

REMOVAL

The seat belt tensioners are integral to the front seat belt buckles. They are not serviceable and must be replaced after a frontal impact event. The entire front seat belt buckle assembly must be replaced as an assembly.

(1) Open hood.

(2) Disconnect and isolate the battery negative cable.

(3)

WARNING: Wait two minutes for the airbag system reserve capacitor to discharge before beginning any airbag system or component service. Failure to do so may result in accidental airbag deployment, personal injury or death.

(4) Remove screws attaching front inboard side cover to seat cushion frame.

(5) Remove side cover from front seat.

(6) Disconnect the tensioner wire connector from seat belt buckle.

(7) Remove bolt attaching seat belt buckle to front seat track.

(8) Remove buckle from seat.

INSTALLATION

The seat belt tensioners are integral to the front seat belt buckles. They are not serviceable and must be replaced after a frontal impact event. The entire front seat belt buckle assembly must be replaced as an assembly.

(1) Place buckle into position.

(2) Install bolt attaching seat belt buckle to front seat track. Torque bolt to 39 N·m (29 ft. lbs.).

(3) Connect the seat belt tensioner electrical connector.

(4) Install side cover into position.

(5) Install screws attaching front inboard side cover to seat cushion frame.

WARNING: Do not connect the battery negative cable (Refer to 8 - ELECTRICAL/RESTRAINTS - DIAGNOSIS AND TESTING - AIRBAG SYSTEM). Personal injury or death may result if the system test is not performed first.

WARNING: If equipped with the Occupant Classification System (OCS) and replacing the passenger front seat belt buckle: Following successful completion of the Airbag System test procedure, the Occupant Classification System Verification Test must be done using a scan tool and the appropriate diagnostic information.

(6) Close hood.

(7) Verify system and vehicle operation.

SEAT BELT BUCKLE - FIRST ROW INBOARD - QUAD BUCKET

REMOVAL

QUAD BUCKET

(1) Remove seat from vehicle.

(2) Remove screws attaching inboard side cover to seat cushion.

(3) Remove side cover from seat.

(4) Remove bolts attaching recliner bracket to seat cushion.

(5) Remove recliner bracket from seat.

(6) Remove bolt attaching seat belt buckle to seat track (Fig. 41).

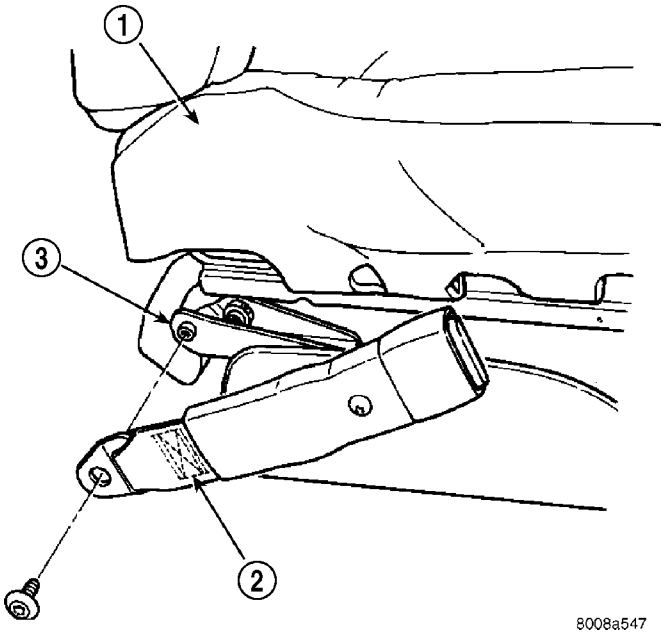

Fig. 41 1ST ROW INBOARD BUCKLE - QUAD BUCKET

1 - SEAT CUSHION
2 - SEAT BELT BUCKLE
3 - SEAT TRACK

(7) Remove buckle from vehicle.

QUAD BUCKET - FOLD IN FLOOR

(1) Fold in floor the seat not having the buckle replaced.

(2) Remove the hinge cover retaining screw and hinge cover.

SEAT BELT BUCKLE - FIRST ROW INBOARD - QUAD BUCKET (Continued)

(3) Remove the hinge retaining bolts under the cushion cover side panel (Fig. 42).

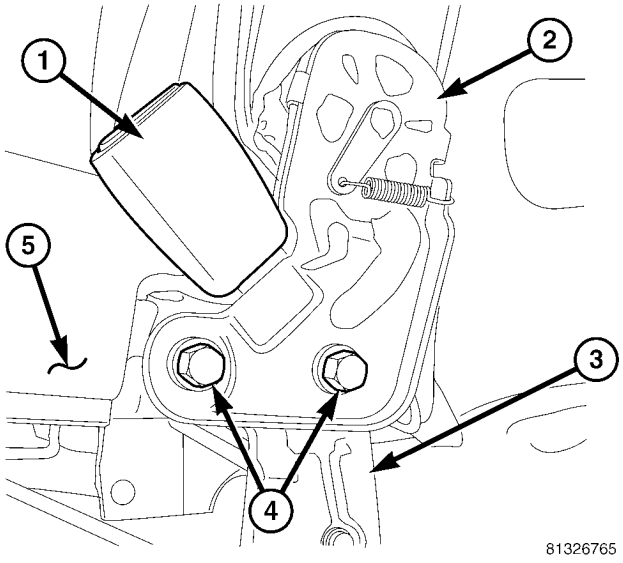

Fig. 42 1ST ROW INBOARD BUCKLE RETAINING BOLTS - FOLD IN FLOOR

1 - SEAT BELT BUCKLE
2 - SEAT BACK INBOARD HINGE
3 - SEAT RISER
4 - INBOARD HINGE RETAINING BOLTS
5 - SEAT CUSHION COVER SIDE PANEL

(4) Gently lift hinge upwards to free buckle from between the cushion frame and the hinge itself (Fig. 43).

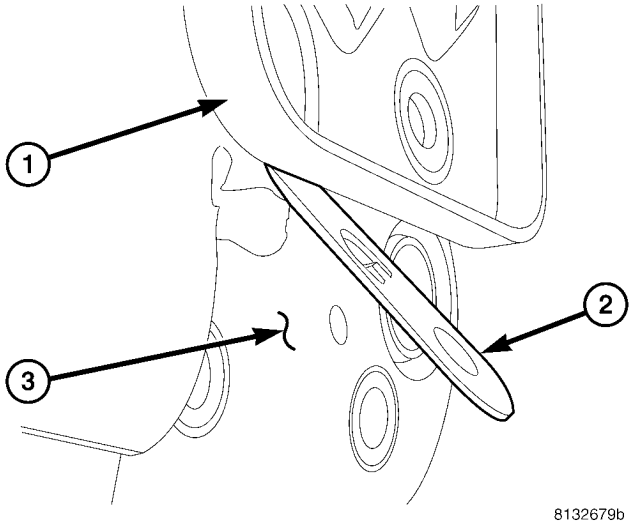

Fig. 43 1ST ROW INBOARD BUCKLE - FOLD IN FLOOR

1 - SEAT BACK HINGE
2 - SEAT BELT BUCKLE
3 - SEAT CUSHION FRAME

(5) Remove buckle half from seat.

INSTALLATION

QUAD BUCKET

(1) Place buckle into position.
(2) Install bolt attaching seat belt buckle to seat track. Torque bolt to 39 N·m (29 ft. lbs.).
(3) Install recliner bracket onto the seat.
(4) Install bolts attaching recliner bracket to seat cushion.
(5) Install side cover from seat.
(6) Install screws attaching inboard side cover to seat cushion.
(7) Install seat into position.

QUAD BUCKET - FOLD IN FLOOR

(1) Gently lift hinge upwards and place buckle in between the cushion frame and the hinge itself (Fig. 43).
(2) Install the hinge retaining bolts under the cushion cover side panel (Fig. 42).
(3) Install the hinge cover retaining screw and hinge cover.

SEAT BELT BUCKLE - FIRST ROW - BENCH

REMOVAL

(1) Remove seat from vehicle.
(2) Remove bolt attaching inboard seat belt buckle to seat frame (Fig. 44).
(3) Remove belt from seat.

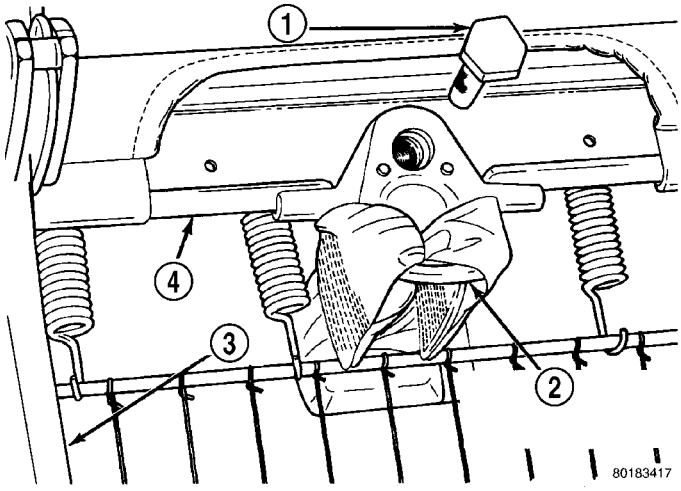

Fig. 44 SEAT BELT BUCKLE - FIRST ROW - BENCH

1 - ANCHOR BOLT
2 - TWO (2) PASS REAR SEAT BELT BUCKLE
3 - RISER
4 - REAR FRAME

SEAT BELT BUCKLE - FIRST ROW - BENCH (Continued)

INSTALLATION

(1) Place seat belt into position to the seat.
(2) Install bolt attaching inboard seat belt buckle to seat frame. Tighten all seat belt anchor bolts to 39 N·m (29 ft. lbs.) torque.
(3) Install seat into position.

SEAT BELT BUCKLE - SECOND ROW INBOARD - 50/50 BENCH

REMOVAL

SECOND ROW 50/50 BENCH

(1) Open rear liftgate.
(2) Pull handle #1 and fold seat back forward.
(3) Pull handle #2, and lift seat bottom up.
(4) Pull #3 strap and remove seat from latching area.
(5) While looking at the bottom of the seat, locate retaining bolt on the left side of the seat riser. Remove retaining bolt from seat riser (Fig. 45).

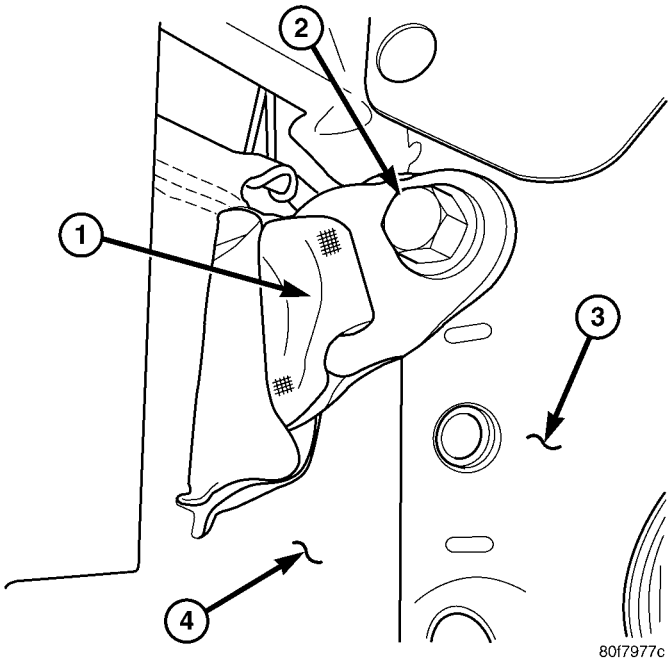

Fig. 45 SEAT BELT BUCKLE - SECOND ROW INBOARD - 50/50 BENCH

1 - SEAT BELT BUCKLE
2 - BUCKLE RETAINING BOLT
3 - 50/50 SPLIT BENCH RISER
4 - BOTTOM OF SEAT CUSHION

(6) Pull belt through seat cushion.

SECOND ROW - FOLD IN FLOOR

(1) Fold in floor the seat not having the buckle replaced.
(2) Remove the hinge cover retaining screw (Fig. 46).

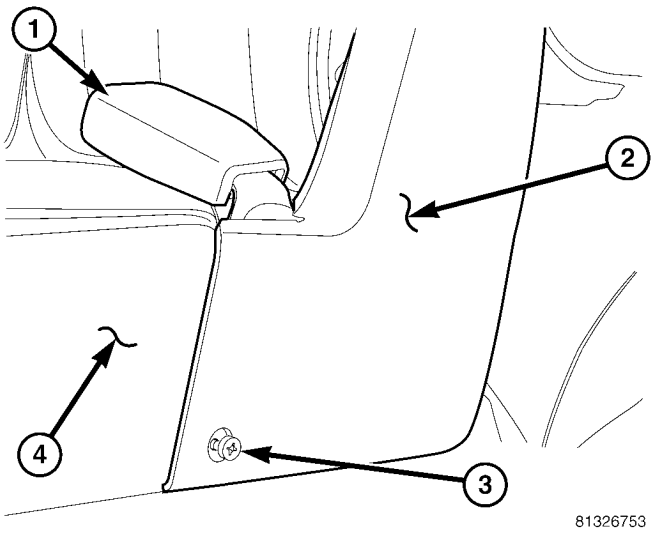

Fig. 46 FIRST ROW BUCKLE - INBOARD - COVER RETAINING SCREW

1 - SEAT BELT BUCKLE
2 - HINGE COVER
3 - HINGE COVER RETAINING SCREW
4 - CUSHION COVER SIDE PANEL

(3) Pull hinge cover out just far enough to gain access to buckle retaining nut (Fig. 47). Remove nut and slide buckle out from under cushion cover side panel.

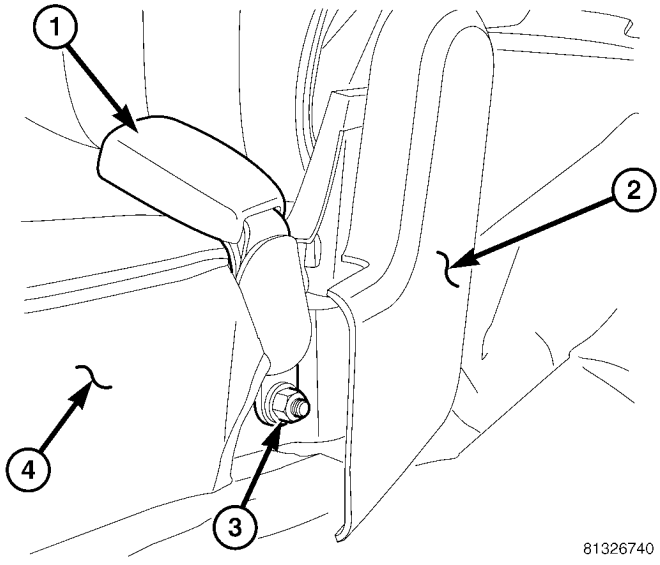

Fig. 47 FIRST ROW BUCKLE - INBOARD - RETAINING NUT

1 - SEAT BELT BUCKLE
2 - HINGE COVER
3 - SEAT BELT BUCKLE RETAINING NUT
4 - CUSHION COVER SIDE PANEL

SEAT BELT BUCKLE - SECOND ROW INBOARD - 50/50 BENCH (Continued)

INSTALLATION

(1) Push belt through seat cushion.
(2) While looking at the bottom of the seat, locate retaining bolt hole on the left side of the seat riser. Install retaining bolt into seat riser (Fig. 45). Torque anchor bolt to 39 N·m (29 ft. lbs.).
(3) Place seat into track and on front anchors.
(4) Pull #3 strap and install seat onto latching area.
(5) Pull seat assembly down firmly and snap into track.
(6) Pull handle #1 and fold seat back rearward.
(7) Close rear liftgate.

SEAT BELT HEIGHT ADJUSTER - B OR C-PILLAR

REMOVAL

(1) Remove turning loop retaining bolt.
(2) Remove B or C-pillar trim cover.
(3) Remove two screws attaching shoulder belt height adjuster to pillar.
(4) Remove height adjuster from vehicle.

INSTALLATION

(1) Place height adjuster into position.
(2) Install screws attaching shoulder belt height adjuster to pillar.
(3) Install B or C-pillar trim cover.
(4) Install turning loop to height adjuster. Torque anchor bolt to 39 N·m (29 ft. lbs.).

SEAT BELT HEIGHT ADJUSTER KNOB

REMOVAL

(1) Disengage clips attaching clam shell cover to seat belt turning loop and open cover.
(2) Using a trim tool (special tool #C-4755), gently pry knob from seat belt height adjuster.

INSTALLATION

(1) Place seat belt height adjuster knob in position on height adjuster.
(2) Firmly push knob on until retainers engage.
(3) Reinstall turning loop clam shell cover.
(4) Verify seat belt operation. Make sure it moves through loop without binding.

SEAT BELT & RETRACTOR - OUTBOARD - FRONT

REMOVAL

(1) Open door.
(2) Move seat all the way forward.
(3) Open hood.
(4) Disconnect and isolate the battery negative cable.
(5)

WARNING: Wait two minutes for the airbag system reserve capacitor to discharge before beginning any airbag system or component service. Failure to do so may result in accidental airbag deployment, personal injury or death.

(6) Remove shoulder harness height adjuster knob by pulling it straight away from adjuster (Fig. 48).

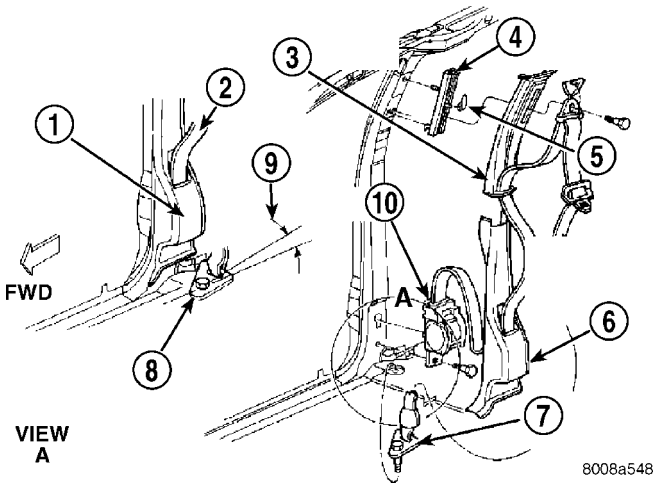

Fig. 48 SEAT BELT - OUTBOARD FRONT

1 - B-PILLAR TRIM LOWER
2 - BELT
3 - B-PILLAR TRIM UPPER
4 - HEIGHT ADJUSTER
5 - KNOB
6 - B-PILLAR TRIM LOWER
7 - FLOOR ANCHOR
8 - FLOOR ANCHOR
9 - 30° OUTBOARD
10 - RETRACTOR

(7) Remove cover from seat belt turning loop (Fig. 48).
(8) Remove bolt attaching turning loop to shoulder belt height adjuster (Fig. 48).
(9) Remove upper B-pillar trim cover (Fig. 48).

NOTE: If equipped with the Occupant Classification System (OCS), there is a Belt Tension Sensor located on the lower seat belt anchor on the passenger front seat belt.

SEAT BELT & RETRACTOR - OUTBOARD - FRONT (Continued)

(10) Remove the lower seat belt anchor bolt (Fig. 49).

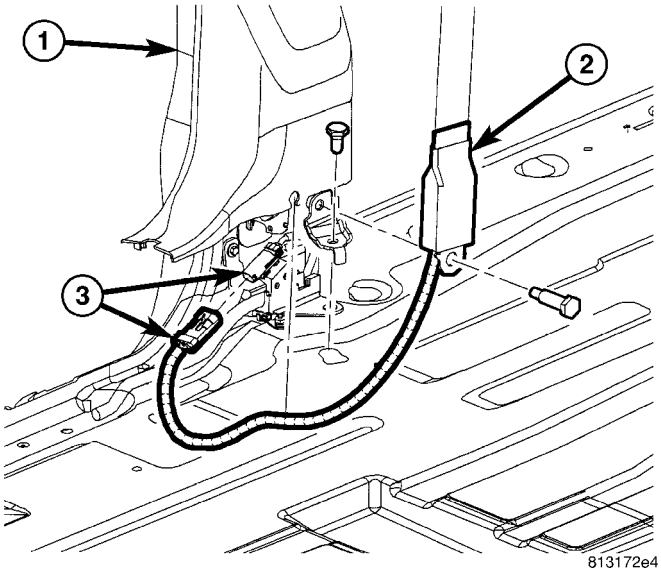

Fig. 49 BELT TENSION SENSOR/LOWER SEAT BELT ANCHOR

1 - A-PILLAR
2 - SEAT BELT ANCHOR/BELT TENSION SENSOR
3 - BELT TENSION SENSOR CONNECTOR

(11) Disconnect the electrical connector if equipped with OCS (Fig. 49).
(12) Remove front door sill plate (Fig. 48).
(13) Remove sliding door sill plate (Fig. 48).
(14) Remove lower B-pillar trim cover (Fig. 48).
(15) Disconnect the seat belt retractor electrical connector (Fig. 48).
(16) Remove seat belt retractor attaching bolt (Fig. 48).
(17) Remove the seat belt and retractor from vehicle.

INSTALLATION

WARNING: Inspect the condition of the shoulder belt and lap belt. Replace any belt that is cut, frayed, torn, or damaged in any way. Also, replace the shoulder belt if the retractor is either damaged or inoperative.

(1) Place seat belt and retractor into position (Fig. 48).
(2) Install bolt attaching seat belt retractor to B-pillar (Fig. 48). Torque bolt to 39 N·m (29 ft. lbs.).
(3) Connect the seat belt retractor electrical connector (Fig. 48).
(4) Install the lower B-pillar trim cover (Fig. 48).
(5) Install the sliding door sill plate (Fig. 48).
(6) Install the front door sill plate (Fig. 48).
(7) Install the lower seat belt anchor bolt (Fig. 49). Torque bolt to 39 N·m (29 ft. lbs.).

NOTE: If equipped with the Occupant Classification System (OCS), there is a Belt Tension Sensor located on the lower seat belt anchor on the passenger front seat belt.

(8) Connect the belt tension sensor connector (if equipped with OCS) (Fig. 49).
(9) Install the upper B-pillar trim cover (Fig. 48).
(10) Install the bolt attaching turning loop to shoulder belt height adjuster (Fig. 48). Torque bolt to 39 N·m (29 ft. lbs.).
(11) Install the cover to the seat belt turning loop (Fig. 48).
(12) Install the shoulder harness height adjuster knob by pushing it straight onto the adjuster (Fig. 48).
(13) Move seat back to approximate customer position.

WARNING: If equipped with the OCS, do not connect the battery negative cable (Refer to 8 - ELECTRICAL/RESTRAINTS - DIAGNOSIS AND TESTING - AIRBAG SYSTEM). Personal injury or death may result if the system test is not performed first.

WARNING: If equipped with the OCS, following successful completion of the Airbag System test procedure, the Occupant Classification System Verification Test must be done using a scan tool and the appropriate diagnostic information.

(14) Verify vehicle and system operation.
(15) Close hood.

SEAT BELT & RETRACTOR - FIRST ROW - OUTBOARD

REMOVAL

(1) Remove first and second row seats.
(2) Remove first row seat belt lower anchor bolt.
(3) Remove first row seat belt upper turning loop anchor bolt.
(4) Remove liftgate sill plate.
(5) Remove upper liftgate trim.
(6) Remove second seat lower anchor bolt.
(7) Remove second seat upper turning loop anchor bolt.
(8) Remove D-pillar trim cover.
(9) Disconnect speaker connector. The left side has the speaker mounted in the D-pillar trim cover and the right side will have the speaker mounted in the rear of the quarter trim panel, but the connector is

SEAT BELT & RETRACTOR - FIRST ROW - OUTBOARD (Continued)

accessible from the rear after the D-pillar trim is removed.

(10) Remove quarter trim bolster.

(11) Remove quarter trim panel screws.

(12) Remove quarter trim panel.

(13) Remove first row seat belt and retractor retaining bolt.

(14) Remove first row seat belt and retractor from vehicle.

INSTALLATION

(1) Install first row seat belt and retractor. Torque bolt to 39 N·m (29 ft. lbs.).

(2) Install quarter trim panel.

(3) Install quarter trim panel screws.

(4) Install quarter trim bolster.

(5) Connect speaker connector. The left side has the speaker mounted in the D-pillar trim cover and the right side will have the speaker mounted in the rear of the quarter trim panel, but the connector is accessible from the rear after the D-pillar trim is removed.

(6) Install D-pillar trim cover.

(7) Install second seat belt lower anchor bolt. Torque bolt to 39 N·m (29 ft. lbs.).

(8) Install second seat belt upper turning loop anchor bolt. Torque bolt to 39 N·m (29 ft. lbs.).

(9) Install upper liftgate trim.

(10) Install liftgate sill plate.

(11) Install first row seat belt upper turning loop anchor bolt. Torque bolt to 39 N·m (29 ft. lbs.).

(12) Install first row seat belt lower anchor bolt. Torque bolt to 39 N·m (29 ft. lbs.).

(13) Install first and second row seats.

SEAT BELT BUCKLE - SECOND ROW - THREE PASSENGER BENCH

REMOVAL

(1) Remove bolt attaching seat belt buckle to seat rear frame rail (Fig. 50).

(2) Remove seat belt buckle from seat.

INSTALLATION

(1) Place seat belt buckle in position on seat.

(2) Install bolt to attach seat belt buckle to seat rear frame rail. Tighten all seat belt bolts to 39 N·m (29 ft. lbs.) torque.

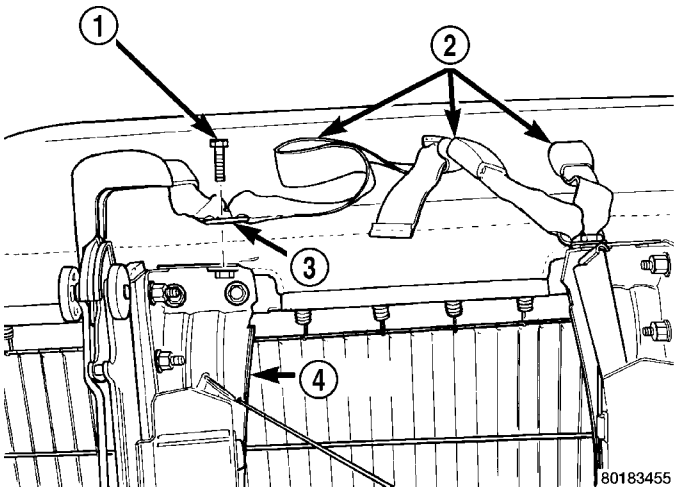

Fig. 50 SEAT BELT BUCKLE - SECOND ROW - THREE PASSENGER BENCH

1 - ANCHOR BOLT
2 - SEAT BELTS
3 - ANCHOR
4 - RISER

SEAT BELT & RETRACTOR - SECOND ROW - RIGHT OUTBOARD

REMOVAL

(1) Remove first and second row seats.

(2) Remove first row seat belt lower anchor bolt.

(3) Remove first row seat belt upper anchor bolt.

(4) Remove liftgate sill plate.

(5) Remove upper liftgate trim.

(6) Remove second seat belt lower anchor bolt.

(7) Remove second seat belt upper anchor bolt.

(8) Remove D-pillar trim cover.

(9) Disconnect speaker connector. The left side has the speaker mounted in the D-pillar trim cover and the right side will have the speaker mounted in the rear of the quarter trim panel, but the connector is accessible from the rear after the D-pillar trim is removed.

(10) Remove quarter trim bolster.

(11) Remove quarter trim panel screws.

(12) Remove quarter trim panel.

(13) Remove retractor retaining bolt.

(14) Remove second row seat belt and retractor.

INSTALLATION

(1) Install second row seat belt and retractor. Torque bolt to 39 N·m (29 ft. lbs.).

(2) Install quarter trim panel.

(3) Install quarter trim panel screws.

(4) Install quarter trim bolster.

(5) Connect speaker connector. The left side has the speaker mounted in the D-pillar trim cover and

the right side will have the speaker mounted in the rear of the quarter trim panel, but the connector is accessible from the rear after the D-pillar trim is removed.

(6) Install D-pillar trim cover.

(7) Install second seat belt lower anchor bolt. Torque bolt to 39 N·m (29 ft. lbs.).

(8) Install second seat belt upper turning loop anchor bolt. Torque bolt to 39 N·m (29 ft. lbs.).

(9) Install upper liftgate trim.

(10) Install liftgate sill plate.

(11) Install first row seat belt upper turning loop anchor bolt. Torque bolt to 39 N·m (29 ft. lbs.).

(12) Install first row seat belt lower anchor bolt. Torque bolt to 39 N·m (29 ft. lbs.).

(13) Install first and second row seats.

SEAT BELT & RETRACTOR - SECOND ROW - RIGHT OUTBOARD WITH REAR HVAC - LWB

REMOVAL

(1) Remove first and second row seats.

(2) Remove first row seat belt lower anchor bolt.

(3) Remove first row seat belt upper anchor bolt.

(4) Remove liftgate sill plate.

(5) Remove upper liftgate trim.

(6) Remove second seat belt lower anchor bolt.

(7) Remove second seat belt upper anchor bolt.

(8) Remove D-pillar trim cover.

(9) Disconnect speaker connector. The left side has the speaker mounted in the D-pillar trim cover and the right side will have the speaker mounted in the rear of the quarter trim panel, but the connector is accessible from the rear after the D-pillar trim is removed.

(10) Remove quarter trim bolster.

(11) Remove quarter trim panel screws.

(12) Remove quarter trim panel.

(13) Loosen HVAC unit enough to gain access to seat belt retractor fasteners.

(a) Remove bracket around HVAC unit (Fig. 51).

(b) Remove air duct (Fig. 52).

(c) Remove fasteners attaching HVAC unit to inner quarter panel (Fig. 53).

(d) Gently pry out on rear HVAC unit to gain access to the seat belt and retractor.

(14) Remove bolts attaching seat belt guide loop to inner quarter panel.

(15) Pull outward on HVAC unit and remove bolt attaching retractor to inner quarter panel.

(16) Remove second row seat belt and retractor from vehicle.

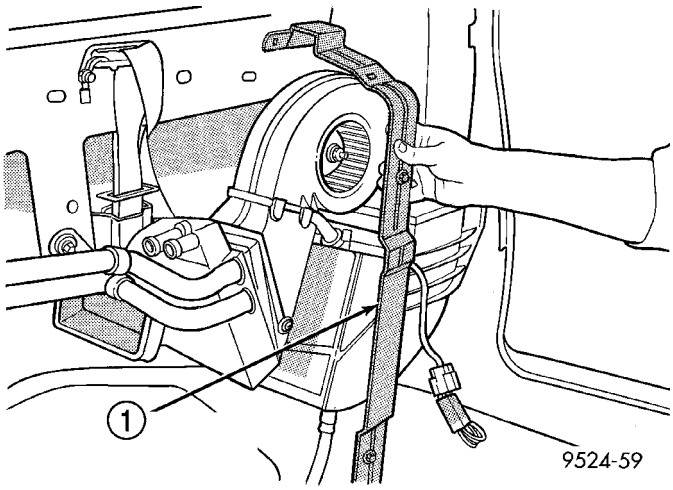

Fig. 51 TRIM PANEL MOUNTING BRACKET

1 - TRIM PANEL MOUNTING BRACKET

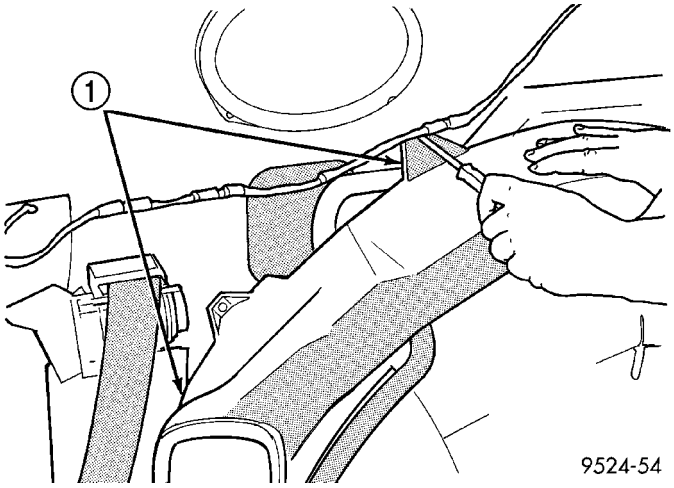

Fig. 52 LOWER HEATER DUCT

1 - LOWER HEAT DUCT MOUNTING

INSTALLATION

(1) Position second row seat belt and retractor to vehicle.

(2) Pull outward on HVAC unit and install bolt attaching retractor to inner quarter panel. Torque bolt to 39 N·m (29 ft. lbs.).

(3) Install bolts attaching seat belt guide loop to inner quarter panel.

(4) Install fasteners attaching HVAC unit to inner quarter panel.

(5) Install air duct.

(6) Install trim panel retaining bracket around HVAC unit.

(7) Install quarter trim panel.

(8) Install quarter trim panel screws.

(9) Install quarter trim bolster.

(10) Connect speaker connector. The left side has the speaker mounted in the D-pillar trim cover and

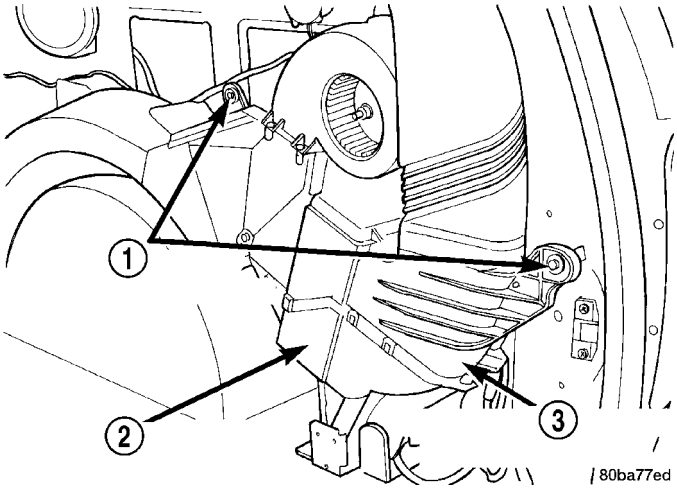

Fig. 53 REAR HVAC MOUNTING

1 - REAR HVAC MODULE MOUNTING
2 - REAR EVAPORATOR LOWER HOUSING
3 - REAR EVAPORATOR UPPER HOUSING

the right side will have the speaker mounted in the rear of the quarter trim panel, but the connector is accessible from the rear after the D-pillar trim is removed.

(11) Install D-pillar trim cover.

(12) Install second seat belt lower anchor bolt. Torque bolt to 39 N·m (29 ft. lbs.).

(13) Install second seat belt upper turning loop anchor bolt. Torque bolt to 39 N·m (29 ft. lbs.).

(14) Install upper liftgate trim.

(15) Install liftgate sill plate.

(16) Install first row seat belt upper turning loop anchor bolt. Torque bolt to 39 N·m (29 ft. lbs.).

(17) Install first row seat belt lower anchor bolt. Torque bolt to 39 N·m (29 ft. lbs.).

(18) Install first and second row seats.

SEAT BELT & RETRACTOR - SECOND ROW - LEFT OUTBOARD

REMOVAL

(1) Remove first and second row seats.

(2) Remove first row seat belt lower anchor bolt.

(3) Remove first row seat belt upper anchor bolt.

(4) Remove liftgate sill plate.

(5) Remove upper liftgate trim.

(6) Remove second seat belt lower anchor bolt.

(7) Remove second seat belt upper anchor bolt.

(8) Remove D-pillar trim cover.

(9) Disconnect speaker connector. The left side has the speaker mounted in the D-pillar trim cover and the right side will have the speaker mounted in the rear of the quarter trim panel, but the connector is accessible from the rear after the D-pillar trim is removed.

(10) Remove quarter trim bolster.

(11) Remove quarter trim panel screws.

(12) Remove quarter trim panel.

(13) Remove retractor retaining bolt.

(14) Remove second row seat belt and retractor from vehicle.

INSTALLATION

(1) Install second row seat belt and retractor. Torque bolt to 39 N·m (29 ft. lbs.).

(2) Install quarter trim panel.

(3) Install quarter trim panel screws.

(4) Install quarter trim bolster.

(5) Connect speaker connector. The left side has the speaker mounted in the D-pillar trim cover and the right side will have the speaker mounted in the rear of the quarter trim panel, but the connector is accessible from the rear after the D-pillar trim is removed.

(6) Install D-pillar trim cover.

(7) Install second seat belt lower anchor bolt. Torque bolt to 39 N·m (29 ft. lbs.).

(8) Install second seat belt upper turning loop anchor bolt. Torque bolt to 39 N·m (29 ft. lbs.).

(9) Install upper liftgate trim.

(10) Install liftgate sill plate.

(11) Install first row seat belt upper turning loop anchor bolt. Torque bolt to 39 N·m (29 ft. lbs.).

(12) Install first row seat belt lower anchor bolt. Torque bolt to 39 N·m (29 ft. lbs.).

(13) Install first and second row seats.

SEAT BELT TENSIONER

DESCRIPTION

The seat belt system incorporates Seat Belt Tensioners. The tensioner is designed to hold the occupant in their respective seat by retracting the seat belt up to four inches. They are integral to the front seat belt buckles and cannot be serviced. If found defective they must be replaced. After an airbag deployment, the tensioner must be replaced.

Seat Belt Tensioners supplement the dual front airbag system. The seat belt tensioners are integral to the front seat belt buckles, which are secured to the seat cushion frame on the inboard side. The seat belt tensioners are controlled by the Occupant Restraint Controller (ORC) and are connected to the vehicle electrical system through the body wire harness.

The seat belt tensioners cannot be repaired and, if faulty or damaged, the entire front seat belt buckle must be replaced. The seat belt tensioners are not intended for reuse and must be replaced following any front airbag deployment.

OPERATION

WARNING: When the front airbag is deployed, the tensioner will have deployed also and should be replaced. Failure to do so could result in occupant personal injury or death.

The seat belt tensioners are deployed by a signal generated by the Occupant Restraint Controller (ORC) through the driver or passenger seat belt tensioner line 1 and line 2 (or squib) circuits. When the ORC sends the proper electrical signal to the tensioners, the electrical energy generates enough heat to initiate a small pyrotechnic gas generator.

Removing excess slack from the front seat belts not only keeps the occupants properly positioned for an airbag deployment following a frontal impact of the vehicle, but also helps to reduce injuries that the occupants of the front seat might experience in these situations as a result of a harmful contact with the steering wheel, steering column, instrument panel and/or windshield.

The ORC monitors the condition of the seat belt tensioners through circuit resistance, and will illuminate the airbag indicator in the ElectroMechanical Instrument Cluster (EMIC) and store a Diagnostic Trouble Code (DTC) for any fault that is detected. For proper diagnosis of the seat belt tensioners, use a scan tool and the appropriate diagnostic information.

SEAT WEIGHT BLADDER & PRESSURE SENSOR

DESCRIPTION

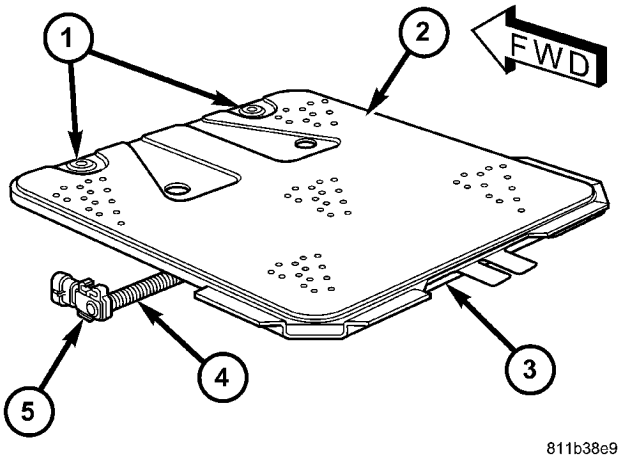

Fig. 54 SEAT WEIGHT BLADDER AND PRESSURE SENSOR - TYPICAL

1 - FASTENER (2)
2 - BLADDER
3 - PAD
4 - TUBE
5 - PRESSURE SENSOR

Vehicles equipped with the Occupant Classification System (OCS) have a seat weight bladder and pressure sensor unit (Fig. 54) that is integral to the passenger front seat cushion. The bladder is sandwiched between the seat cushion pan and seat cushion foam.

The bladder consists of two rectangular sheets of an elastomeric material and a molded plastic elbow fitting. The two sheets of material are sealed together around their perimeter and heat staked to each other at numerous regular points within their field. The elbow fitting is sealed to a small round hole in the lower surface of the bladder and is pointed downward where it passes through a clearance hole in the insulator pad and extends to just below the seat cushion. The bladder is then filled with a silicone fluid to become a pliable, quilted membrane.

Under the seat cushion a short tube is securely clamped at one end to the bladder nipple, and at the other end to a nipple on the electronic pressure sensor. The sensor housing features an integral mount that snaps over a tab integral to the stamped steel Occupant Classification Module (OCM) mounting bracket welded to the underside of the passenger front seat cushion frame.

SEAT WEIGHT BLADDER & PRESSURE SENSOR (Continued)

The seat weight bladder and pressure sensor cannot be adjusted or repaired. The components of the passenger front seat cushion of a vehicle equipped with the OCS including the cushion frame, seat weight bladder and pressure sensor, seat cushion foam, wire harness and the OCM are serviced only as a factory-calibrated, assembled and tamper-evident unit. Only the OCM and the seat cushion trim are available for separate service replacement. Once a service replacement package has been installed in a vehicle, the OCM can thereafter be serviced only by replacing the entire passenger front seat cushion unit with another complete service replacement package.

OPERATION

The seat weight bladder and pressure sensor unit is designed to sense the relative weight of a load applied to the passenger front seat cushion, which provides a logic input to the microprocessor of the Occupant Classification Module (OCM). When a load is applied to the seat cushion, fluid within the bladder becomes pressurized. These changes in bladder fluid pressure are measured by the pressure sensor under the seat cushion through the bladder tube. As the pressure within the bladder changes, the circuitry of the pressure sensor changes the output voltage of the sensor.

The pressure sensor receives a nominal five volts and a ground through hard wired circuits from the OCM. The OCM then monitors the pressure sensor output voltage on the Programmable Communication Interface (PCI) data bus circuit.

To properly diagnose the seat weight bladder and pressure sensor, its communication with/between the OCM, and all other components within the OCS, use a scan tool and the appropriate diagnostic information.

SPEED CONTROL

TABLE OF CONTENTS

page

SPEED CONTROL
DESCRIPTION 1
OPERATION
OPERATION 1
OPERATION - INTERACTIVE SPEED CONTROL (4 Speed EATX Only) 2
DIAGNOSIS AND TESTING - ROAD TEST 3
SPECIFICATIONS - TORQUE 3
CABLE
DESCRIPTION 4
OPERATION 4
REMOVAL 4
INSTALLATION 4
SERVO
DESCRIPTION 4
OPERATION 4
REMOVAL 4
INSTALLATION 4
SWITCH
DESCRIPTION 5
OPERATION 5
REMOVAL 5
INSTALLATION 6
VACUUM RESERVOIR
DESCRIPTION 6
OPERATION 6
REMOVAL 6
INSTALLATION 6

SPEED CONTROL

DESCRIPTION

The speed control system is electronically controlled and vacuum operated. The electronic control is integrated into the Powertrain Control Module. The controls are located on the steering wheel. The ON/OFF, and SET buttons are located on the left side of the airbag module. The RESUME/ACCEL, CANCEL and COAST buttons are located on the right side of the airbag module (Fig. 1).

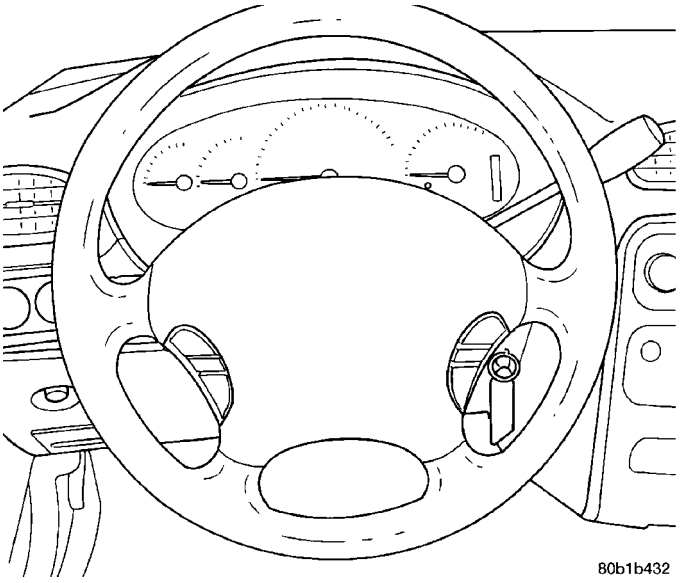

Fig. 1 SPEED CONTROL SWITCHES - Typical

The system is designed to operate at speeds above 30 mph (48 km/h).

WARNING: THE USE OF SPEED CONTROL IS NOT RECOMMENDED WHEN DRIVING CONDITIONS DO NOT PERMIT MAINTAINING A CONSTANT SPEED, SUCH AS IN HEAVY TRAFFIC OR ON ROADS THAT ARE WINDING, ICY, SNOW COVERED, OR SLIPPERY.

OPERATION

OPERATION

When speed control is activated by depressing the ON switch, the PCM allows a set speed to be stored in RAM for speed control. To store a set speed, depress and release the SET switch while the vehicle is moving at a speed between 25 and 85 mph. In order for the speed control to engage, the brakes cannot be applied, nor can the gear selector be indicating the transmission is in Park or Neutral (ATX) or 1st/2nd gear (MTX). The speed control can be disengaged manually by:

- Stepping on the brake pedal
- Depressing the OFF switch
- Depressing the CANCEL switch.
- Depressing the clutch pedal
- Operating in 1st or 2nd gear (autostick, if equipped)

SPEED CONTROL (Continued)

NOTE: Turning the system off by depressing the OFF switch or turning off the ignition switch will erase the set speed stored in the PCM.

For added safety, the speed control system is programmed to disengage for any of the following conditions:

- An indication of Park or Neutral
- A rapid increase rpm (indicates that the clutch has been disengaged)
- Excessive engine rpm (indicates that the transmission may be in a low gear)
- The speed signal increases at a rate of 10 mph per second (indicates that the co-efficient of friction between the road surface and tires is extremely low)
- The speed signal decreases at a rate of 10 mph per second (indicates that the vehicle may have decelerated at an extremely high rate)
- If the actual speed is greater than 20 mph over the set speed.
- Autostick shifts into 1st or 2nd gear (autostick, if equipped)

Once the speed control has been disengaged, depressing the RESUME switch when speed is greater than 20 mph allows the vehicle to resume control to the target speed that was stored in the PCM.

While the speed control is engaged, the driver can increase the vehicle speed by depressing the ACCEL switch. The new target speed is stored in the PCM when the ACCEL switch is released. The PCM also has a ″tap-up″ feature in which target speed increases by 2 mph for each momentary switch activation of the ACCEL switch. The PCM also provides a means to decelerate to a new lower target speed without disengaging speed control. Depress and hold the COAST switch until the desired speed is reached, then release the switch.

The PCM also has a “Tap Down” feature in which target speed decreases at 1 mph for each momentary switch activation of the coast switch.

OPERATION - INTERACTIVE SPEED CONTROL (4 Speed EATX Only)

Interactive means that communication between the PCM and the TCM is taking place, this communication is internal to the PCM on NGC vehicles. Interactive speed control avoids unnecessary shifting for smoother, quieter operation and when downshifts are required, makes the shifts smoother.

CLIMBING A GRADE

DESCRIPTION

When climbing a grade the interactive speed control tries to maintain the set speed by increasing the throttle opening, while inhibiting/delaying downshifts.

OPERATION

If opening the throttle alone cannot maintain the set speed and the vehicle speed drops more than three mph below the set speed, the transmission will downshift to third gear. If the vehicle continues to lose speed, by more than 6 mph, the transmission will downshift again to maintain the set speed. After the vehicle encounters a less-steep grade, or has crested the grade (reduced the load on the powertrain) and can maintain the set speed at a reduced throttle position, the transmission will upshift, as appropriate, until the set speed can be maintained in Overdrive.

GRADE HUNTING

DESCRIPTION

All vehicles equipped with a four speed automatic transmission have a grade hunting feature for the 2nd to 3rd gear upshift and the 3rd to Overdrive upshift.

OPERATION

The PCM on NGC vehicles identifies the powertrain loading conditions and selects the proper gear to maintain the current vehicle speed. Under moderate loading conditions the transaxle will stay in 3rd gear until the top of the grade is reached or the powertrain loading is reduced.

If powertrain loading is severe, the transaxle may shift into 2nd gear and remain there until powertrain loading is reduced, then a 2nd to 3rd gear upshift will be scheduled. Grade hunting features always operate regardless of whether or not the interactive speed control is engaged. **If the interactive speed control is not engaged and powertrain loading is not reduced, the driver may have to completely lift off of the throttle before an upshift will occur**. If the driver does lift off the throttle to induce an upshift under these conditions, vehicle speed will reduce and the Overdrive to 3rd and 3rd to 2nd gear downshifts will reoccur when the throttle is reapplied. If grade hunting is repeatedly induced by the driver, transaxle damage may result.

AUTOMATIC SPEED CONTROL OVERSPEED REDUCTION

DESCRIPTION

Transmission control software includes an automatic speed control overspeed reduction feature. This maintains vehicle speed at the selected set point when descending a grade.

SPEED CONTROL (Continued)

OPERATION

The PCM on NGC vehicles first senses that the speed control is set. If the set speed is exceeded by more than 4 mph (6.5 km/hr) and the throttle is closed, the PCM on NGC vehicles causes the transaxle to downshift to THIRD gear. After downshifting, the automatic speed control resumes normal operation. To ensure that an upshift is appropriate after the set speed is reached, the PCM on NGC vehicles waits until the speed control system opens the throttle at least 6 degrees before upshifting to OVERDRIVE again.

If the driver applies the brakes, canceling automatic speed control operation with the transaxle still in THIRD gear, the PCM on NGC vehicles maintains this gear until the driver opens the throttle at least 6 degrees to avoid an inappropriate upshift. The upshift is also delayed for 2.5 seconds after reaching the 6 degrees throttle opening in anticipation that the driver might open the throttle enough to require THIRD gear. This will avoid unnecessary and disturbing transmission cycling. If the automatic speed control RESUME feature is used after braking, the upshift is delayed until the set speed is achieved to reduce cycling and provide better response.

DIAGNOSIS AND TESTING - ROAD TEST

Perform a vehicle road test to verify reports of speed control system malfunction. The road test should include attention to the speedometer. Speedometer operation should be smooth and without flutter at all speeds.

Flutter in the speedometer indicates a problem which might cause surging in the speed control system. The cause of any speedometer problems should be corrected before proceeding. Refer to the Instrument Cluster for speedometer diagnosis.

If a road test verifies an inoperative system, and the speedometer operates properly, check for:

- A Diagnostic Trouble Code (DTC). If a DTC exists, conduct tests per the Powertrain Diagnostic Procedures manual.
- A misadjusted brake (stop) lamp switch. This could also cause an intermittent problem.
- Loose or corroded electrical connections at the servo. Corrosion should be removed from electrical terminals and a light coating of Mopar Multipurpose Grease, or equivalent, applied.
- Leaking vacuum reservoir.
- Loose or leaking vacuum hoses or connections.
- Defective one-way vacuum check valve.
- Secure attachment at both ends of the speed control servo cable.
- Smooth operation of throttle linkage and throttle body air valve.
- Conduct electrical test at PCM.
- Failed speed control servo. Do the servo vacuum test.

CAUTION: When test probing for voltage or continuity at electrical connectors, care must be taken not to damage connector, terminals or seals. If these components are damaged, intermittent or complete system failure may occur.

SPECIFICATIONS - TORQUE

DESCRIPTION	N·m	Ft. Lbs.	In. Lbs.
Servo Mounting Bracket Nuts	14	10.3	123.9
Servo Mounting Bracket Bolts	14	10.3	123.9
Servo Mounting Nuts	6.7		60

CABLE

DESCRIPTION

The speed control servo cable is connected between the speed control vacuum servo diaphragm and the throttle body control linkage.

OPERATION

This cable causes the throttle control linkage to open or close the throttle valve in response to movement of the vacuum servo diaphragm.

REMOVAL

(1) Disconnect the negative battery cable.
(2) Remove speed control cable from throttle cam by sliding clasp out hole used for throttle cable.
(3) Compress the retaining tabs on the cable and slide cable out of bracket.
(4) Disconnect electrical connectors and vacuum hose from servo.
(5) Remove two nuts attaching speed control cable and mounting bracket to servo.
(6) Pull cable away from servo to expose retaining clip and remove clip attaching cable to servo.
(7) Remove speed control cable.

INSTALLATION

(1) Slide cable into throttle cable bracket and engage retaining tabs.
(2) Rotate the throttle cam forward to the wide open position and install speed control cable clasp.
(3) Rotate the throttle cam forward to the wide open position and install throttle cable clasp.
(4) Install retaining clip that attaches cable to servo.
(5) Insert servo studs through holes in the mounting bracket and speed control cable.
(6) Install nuts, tighten to 6.7 N·m (60 in. lbs.).
(7) Connect vacuum hose to servo.
(8) Connect electrical connector.
(9) Install servo and bracket and tighten nuts and bolt.
(10) Connect negative battery cable.

SERVO

DESCRIPTION

The servo unit consists of a solenoid valve body, and a vacuum chamber. The solenoid valve body contains three solenoids:

- Vacuum
- Vent
- Dump

The vacuum chamber contains a diaphragm with a cable attached to control the throttle linkage.

OPERATION

The PCM controls the solenoid valve body. The solenoid valve body controls the application and release of vacuum to the diaphragm of the vacuum servo. The servo unit cannot be repaired and is serviced only as a complete assembly.

Power is supplied to the servo by the PCM through the brake switch. The PCM controls the ground path for the vacuum and vent solenoids.

The dump solenoid is energized anytime it receives power. If power to the dump solenoid is interrupted, the solenoid dumps vacuum in the servo. This provides a safety backup to the vent and vacuum solenoids.

The vacuum and vent solenoids must be grounded by the PCM to operate. When the PCM grounds the vacuum servo solenoid, the solenoid allows vacuum to enter the servo and pull open the throttle plate using the cable. When the PCM breaks the ground, the solenoid closes and no more vacuum is allowed to enter the servo. The PCM also operates the vent solenoid via ground. The vent solenoid opens and closes a passage to bleed or hold vacuum in the servo as required.

The PCM cycles the vacuum and vent solenoids to maintain the set speed, or to accelerate and decelerate the vehicle. To increase throttle opening, the PCM grounds the vacuum and vent solenoids. To decrease throttle opening, the PCM removes the grounds from the vacuum and vent solenoids.

REMOVAL

(1) Release hood latch and open hood.
(2) Disconnect the negative battery cable.
(3) Disconnect the throttle and speed control cable ends from throttle body (Fig. 2).
(4) Depress lock tabs holding speed control and throttle cable casing to cable mount bracket.
(5) Disconnect vacuum line from speed control servo that leads to the battery tray/vacuum reservoir.
(6) Remove battery tray/vacuum reservoir, refer to the Battery section for more information (Fig. 3).
(7) Remove speed control servo and bracket (Fig. 4).
(8) Disconnect wire connector from speed control servo.
(9) Remove speed control servo.

INSTALLATION

Transfer speed control cable to replacement speed control servo.
(1) Install retaining clip to cable at servo.
(2) Install 2 nuts at cable to servo and servo bracket, tighten to 7 N·m (60 ins. lbs.).
(3) Connect electrical connector to servo.

SERVO (Continued)

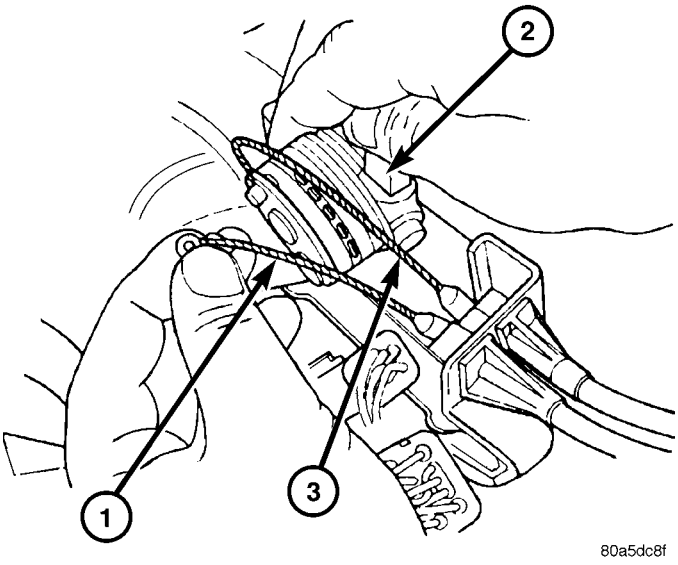

Fig. 2 Speed Control Cable End

1 - SPEED CONTROL VACUUM HOSE
2 - THROTTLE BODY
3 - SPEED CONTROL CABLE

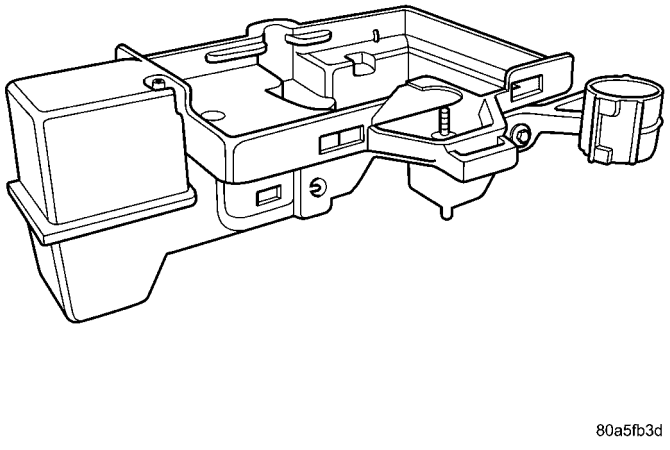

Fig. 3 BATTERY TRAY/VACUUM RESERVOIR

(4) Connect vacuum line to speed control servo that leads to the battery tray/vacuum reservoir.

(5) Install speed control servo and bracket.

(6) Install battery tray/vacuum reservoir, refer to the Battery section for more information.

(7) Install speed control and throttle cable casing to cable mount bracket.

(8) Connect the throttle and speed control cable ends to throttle body.

(9) Connect the negative battery cable.

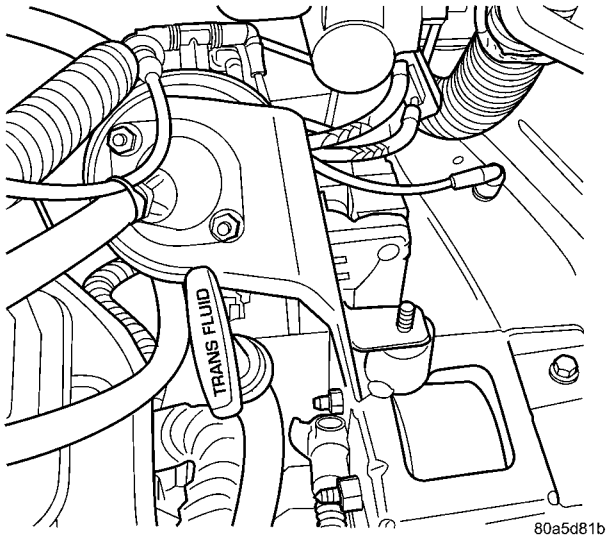

Fig. 4 SPEED CONTROL SERVO

SWITCH

DESCRIPTION

There are two separate switch pods that operate the speed control system and are located on the steering wheel.

OPERATION

The speed control system has five separate resistive switches that provide a single multiplexed (MUX) voltage inputs to the PCM.The switch names are: ON, OFF, SET, COAST, RESUME, ACCEL, TAP-UP, COAST, and CANCEL. Based on conditions when the buttons are pushed (and released), the five voltage ranges provided to the PCM result in the following functions: ON, OFF, SET, COAST, RESUME, ACCEL, TAP-UP, TAP-DOWN, COAST, and CANCEL. Refer to the Speed Control Section for more information

Also the PCM receives an input from the brake switch to sense whether the brake pedal has been depressed. When the PCM receives the brake depressed input, it turns off power to the speed control servo and disengages speed control. Also the power to the servo is supplied through the brake switch, which opens the circuit when the brake pedal is depressed.

The individual switches cannot be repaired. If one switch fails, the entire switch module must be replaced.

REMOVAL

The speed control switches are mounted in the steering wheel and wired through the clock spring device under the airbag module.

SWITCH (Continued)

WARNING: IF REMOVAL OF AIRBAG MODULE IS NECESSARY, REFER TO THE RESTRAINT SYSTEMS SECTION FOR MORE INFORMATION.

(1) Remove the negative battery cable.
(2) Turn off ignition.
(3) Remove the air bag, refer to the restraint section for more information.
(4) Remove the screw from bottom of the switch.
(5) Remove switch from steering wheel.
(6) Disconnect two-way electrical connector.
(7) Repeat for the other switch.

INSTALLATION

The speed control switches are mounted in the steering wheel and wired through the clock spring device under the airbag module.

WARNING: IF REMOVAL OF AIRBAG MODULE IS NECESSARY, REFER TO THE RESTRAINT SYSTEMS SECTION FOR MORE INFORMATION.

(1) Connect two-way electrical connector.
(2) Install switch.
(3) Install screw for the switch.
(4) Repeat for the other switch.
(5) Install the air bag, refer to the restraint section for more information.
(6) Install the negative battery cable.

VACUUM RESERVOIR

DESCRIPTION

The vacuum reservoir is located in the engine compartment. It is made of plastic.

OPERATION

The reservoir stores engine vacuum. Manifold vacuum is supplied from the brake booster check valve. The speed control vacuum supply hose has a check valve at the source (brake booster) to maintain the highest available vacuum level in the servo, reservoir and vacuum hoses. When engine vacuum drops, as in climbing a grade while driving, the reservoir supplies the vacuum needed to maintain proper speed control operation. The vacuum reservoir cannot be repaired and must be replaced if faulty.

REMOVAL

(1) Release hood latch and open hood.
(2) Disconnect the negative battery cable.
(3) Disconnect the vacuum line to the battery tray/vacuum reservoir.
(4) Remove battery tray/vacuum reservoir, refer to the Battery section for more information.

INSTALLATION

(1) Install battery tray/vacuum reservoir, refer to the Battery section for more information.
(2) Connect vacuum line that leads to the battery tray/vacuum reservoir.
(3) Connect the negative battery cable.

VEHICLE THEFT SECURITY

TABLE OF CONTENTS

page

VEHICLE THEFT SECURITY
DESCRIPTION 1
OPERATION 1
DIAGNOSIS AND TESTING
DIAGNOSIS AND TESTING - SENTRY KEY REMOTE ENTRY SYSTEM 3
DIAGNOSIS AND TESTING - VEHICLE THEFT SECURITY SYSTEM 3
HOOD AJAR SWITCH - EXPORT
REMOVAL 3
INSTALLATION 3
SENTRY KEY REMOTE ENTRY MODULE
DESCRIPTION 3
OPERATION 4
DIAGNOSIS AND TESTING - SENTRY KEY REMOTE ENTRY MODULE 5
REMOVAL 6
INSTALLATION 6
TRANSPONDER KEY
DESCRIPTION 6
OPERATION 6
STANDARD PROCEDURE - TRANSPONDER PROGRAMMING 6
VTSS/SKIS INDICATOR LAMP
DESCRIPTION 8
OPERATION 8

VEHICLE THEFT SECURITY

DESCRIPTION

VEHICLE THEFT SECURITY SYSTEM

The Vehicle Theft Security System (VTSS) is designed to protect against whole vehicle theft. The system monitors vehicle doors, and ignition action for unauthorized operation (hood and liftgate for RG - Export). The alarm activates:

- Sounding of the horn
- Flashing of the headlamps/park/tail lamps
- Flashing of the headlamps
- An engine kill feature (with SKREES)

SENTRY KEY REMOTE ENTRY SYSTEM

The Sentry Key Remote Entry System (SKREES) is available as a factory-installed option on this vehicle. It is designed to provide passive protection against unauthorized vehicle use by disabling the engine, after two (2) seconds of running, whenever an invalid key is used to start the vehicle. The SKIS is active whenever the ignition is on and does not require any customer intervention. The primary components of the system are the Sentry Key Remote Entry Module (SKREEM), Sentry Key (integrated key with tranponder and RKE on a circuit board), indicator light, Body Control Module (BCM), and the Powertrain Control Module (PCM). The SKREEM is mounted to the steering column with the molded, integral antenna mounted on the ignition housing. The indicator light, is located in the Mechanical Instrument Cluster (MIC).

OPERATION

VEHICLE THEFT SECURITY SYSTEM

Upon failure of proper Sentry Key Remote Entry Module (SKREEM) communication to the PCM, the PCM will shut off fuel after two seconds of run time. The engine will not re-crank on the key cycle that the failure occurred, a full key down sequence must be performed for the engine to crank again. After six consecutive fuel shut-offs, the engine will no longer crank on subsequent key cycles. The failure must be corrected and a valid communication process between the SKREEM and the PCM must occur for the engine to crank and start again.

The electronics for the VTSS are part of the Body Control Module (BCM). The system is armed when the vehicle is locked using the:

- Power door lock switches (with any door ajar)
- Remote Keyless Entry integrated key.
- Door Cylinder Lock Switches (RG only).

For vehicles equipped with Sentry Key Remote Entry System (SKREES), the doors do not have to be locked to enable the fuel shut off feature.

After the vehicle is locked and the last door is closed, the set LED indicator in the Mechanical Instrument Cluster (MIC) will flash quickly for 16 seconds, indicating that arming is in progress. If no monitored systems are activated during this period, the system will arm. The LED will extinguish unless the liftgate is open. If the liftgate is open, the LED will flash at a slower rate. This indicates that the system is armed.

VEHICLE THEFT SECURITY (Continued)

RG Only - If fault is detected on the driver key cylinder input, the indicator LED will remain solid during the arming process, although the system will still arm.

If the indicator LED does not illuminate at all upon door closing it indicates that the system is not arming.

Passive disarming occurs upon normal vehicle entry by unlocking either door with the remote transmitter (RG - ignition key or remote transmitter). This disarming will also halt the alarm once it has been activated.

A tamper alert exists to notify the driver that the VTSS had been activated. This alert consists of 3 horn pulses when the vehicle is disarmed.

NOTE: The VTSS will not arm by pushing down the door lock mechanism. This will manually override the system.

RG Only - For Door Cylinder Lock Switch Removal and Installation, refer to Electrical, Power Locks, Door Cylinder Lock Switch.

If the VTSS is triggered, the horn will pulse, headlamps/marker lamps will flash, and the VTSS warning lamp will flash. If BCM determines the threat to be false and the VTSS is not triggered again, the system will shut down and rearm itself after three minutes. If a trigger is still active, the alarm will continue for an additional 15 minutes without the horn. The VTSS monitors the passenger compartment (for RG - Export it also monitors the engine compartment. If a malfunction occurs in the engine compartment, the passenger compartment would still arm and function normally).

NOTE: System will not arm if passenger compartment is not secure.

NOTE: (RG - Export - If hood is not secure during the arming sequence, the lamp will stay lit and not flash. The system will arm with hood not secured and the liftgate open).

ARMING THE VTSS - METHOD A

(1) With the key removed from the ignition lock and any door open (excluding liftgate), actuate one of the following:

- Power door lock button to LOCK,
- Key fob LOCK button
- Driver door lock key cylinder to locked position (RG Only).

(2) Close all opened doors. Liftgate can remain open.

(3) After the last door is closed, an arming time-out period of sixteen seconds will start, then the VTSS will become armed.

ARMING THE VTSS - METHOD B

Actuating the key fob transmitter LOCK button, key locking the front doors with the doors closed and the ignition locked will begin the arming time-out period. If method A, 16 second time-out sequence was in process when method B was actuated, the 16 second time-out will restart from the time of the second actuation.

If the security lamp does not illuminate at all upon final door closure, it indicates that the system is not arming.

The current VTSS status armed or disarmed shall be maintained in memory to prevent battery disconnects from disarming the system.

TRIGGERING THE VTSS

After the VTSS is armed, the following actions will trigger the alarm:

- Opening any door (liftgate - only if opening via liftgate button on key fob).
- Opening the hood (RG - Export)
- Turning the ignition to the RUN position.

NOTE: When the VTSS is ARMED, the interior power door lock switch “UNLOCK” will be disabled until the vehicle is disarmed.

CAUTION: The VTSS indicator LED will trigger and engine will continue to run if the vehicle is equipped with SKREES and the proper key is used to start the vehicle. This condition will occur if the VTSS has been triggered. If valid key is used, VTSS will disarm

SENTRY KEY REMOTE ENTRY SYSTEM

The SKREES includes keys from the factory which are pre-programmed. Each SKREEM will recognize a maximum of eight Sentry Keys. If the customer would like to own additional keys other than those provided with the vehicle, they can be purchased from any authorized dealer. These keys must be programmed to the SKREEM on the vehicle in order for the system to recognize them as valid keys. This can be done by the dealer with a DRBIII® scan tool or by a customer if this feature is available in their market and they have two (2) valid keys already available to them. Refer to the Service Procedures portion of this system for additional details. The SKREES performs a self-test each time the ignition switch is turned to the ON position and will store Diagnostic Trouble Codes (DTC’s) if a system malfunction is detected.

VEHICLE THEFT SECURITY (Continued)

The SKREES can be diagnosed and any stored DTC's can be retrieved using a DRBlll® scan tool as described in the appropriate Body Diagnostic Procedures information.

DIAGNOSIS AND TESTING

DIAGNOSIS AND TESTING - SENTRY KEY REMOTE ENTRY SYSTEM

WARNING: On vehicles equipped with airbags, refer to electrical, restraints, warnings, before attempting component diagnosis or service. Failure to take the proper precautions could result in accidental airbag deployment and possible personal injury or death.

NOTE: The following tests may not prove conclusive in the diagnosis of this system. The most reliable, efficient, and accurate means to diagnose the Sentry Key Remote Entry System (SKREES) involves the use of a DRBIII® scan tool. Refer to the proper Body Diagnostic Procedures information.

The Sentry Key Remote Entry System (SKREES) and the Programmable Communication Interface (PCI) bus network should be diagnosed using a scan tool. The scan tool will allow confirmation that the PCI bus is functional, that the Sentry Key Remote Entry Module (SKREEM) is placing the proper messages on the PCI bus, and that the Powertrain Control Module (PCM) is receiving the PCI bus messages. Refer to the proper Body Diagnostic Procedures information, and Wiring Diagrams for complete circuit descriptions and diagrams.

(1) Check the fuses in the Integrated Power Module (IPM). If OK, go to Step 2. If not OK, repair the shorted circuit or component as required and replace the faulty fuse.

(2) Disconnect and isolate the battery negative remote cable from the remote terminal. Unplug the wire harness connector at the SKREEM. Check for continuity between the ground circuit cavity of the SKREEM wire harness connector and a good ground. There should be continuity. If OK, go to Step 3. If not OK, repair the open circuit to ground as required.

(3) Connect the battery negative cable. Check for battery voltage at the fused B(+) circuit cavity of the SKREEM wire harness connector. If OK, go to Step 4. If not OK, repair the open circuit to the fuse in the IPM as required.

(4) Turn the ignition switch to the ON position. Check for battery voltage at the fused ignition switch output (run/start) circuit cavity of the SKREEM wire harness connector. If OK, use a scan tool and the proper Body Diagnostic Procedures information to complete the diagnosis of the SKREES. If not OK, repair the open circuit to the fuse in the IPM as required.

DIAGNOSIS AND TESTING - VEHICLE THEFT SECURITY SYSTEM

Refer to the appropriate wiring information. The wiring information includes wiring diagrams, proper wire and connector repair procedures, further details on wire harness routing and retention, as well as pin-out and location views for the various wire harness connectors, splices and grounds. Using a DRBIII® scan tool. Refer to the proper Body Diagnostic Procedures information for test procedures.

HOOD AJAR SWITCH - EXPORT

REMOVAL

(1) Disconnect and isolate the battery negative cable.

(2) Using a small flat blade screwdriver, pry trigger switch from the bracket on the left fender well.

(3) Disconnect the hood ajar switch from the wire connector and remove from vehicle.

INSTALLATION

(1) Connect the hood ajar switch to the wire conector.

(2) Press the hood ajar switch into position on the bracket located on the left inner fender well.

(3) Reconnect the battery negative cable.

(4) Close the hood and check for proper operation.

SENTRY KEY REMOTE ENTRY MODULE

DESCRIPTION

The Sentry Key Remote Entry Module (SKREEM) performs the functions of the Sentry Key Immobilizer Module (SKIM), Remote Keyless Entry (RKE) Module, and the Tire Pressure Monitoring (TPM) System (previously part of the Electronic Vehicle Information Center (EVIC).

The SKREEM is located in the same location as the SKIM was and is mounted the same way. It looks identical, but has added capabilities.

SENTRY KEY IMMOBILIZER

The Sentry Key Immobilizer System (SKIS) authenticates an electronically coded Transponder Key placed into the ignition and sends a valid/invalid key message to the Powertrain Control Module

(PCM) based upon the results. The "VALID/INVALID KEY" message communication is performed using a rolling code algorithm via the Programmable Communication Interface (PCI) data bus. A "VALID KEY" message must be sent to the Powertrain Control Module (PCM) within two seconds of ignition ON to free the engine from immobilization.

The SKREEM contains a Radio Frequency (RF) transceiver and a microprocessor. The SKREEM retains in memory the ID numbers of any Sentry Key that is programmed to it. The maximum number of keys that may be programmed to each module is eight (8). The SKREEM also communicates over the Programmable Communication Interface (PCI) data bus with the Powertrain Control Module (PCM), the Body Control Module (BCM), the Mechanical Instrument Cluster (MIC), and the DRB III® scan tool. The SKREEM transmits and receives RF signals through a tuned antenna enclosed within a molded plastic ring formation that is integral to the SKREEM housing. When the SKREEM is properly installed on the steering column, the antenna ring fits snugly around the circumference of the ignition lock cylinder housing. If this ring is not mounted properly, communication problems may arise in the form of transponder-related faults.

For added system security, each SKREEM is programmed with a unique ″Secret Key″ code. This code is stored in memory and is sent over the PCI bus to the PCM and to each key that is programmed to work with the vehicle. The ″Secret Key″ code is therefore a common element found in all components of the Sentry Key Immobilizer System (SKIS). In the event that a SKREEM replacement is required, the ″Secret Key″ code can be restored from the PCM by following the SKIM replacement procedure found in the DRB III® scan tool. Proper completion of this task will allow the existing ignition keys to be reprogrammed. Therefore, new keys will NOT be needed. In the event that the original ″Secret Key″ code can not be recovered, new ignition keys will be required. The DRB III® scan tool will alert the technician if key replacement is necessary. Another security code, called a PIN, is used to gain secured access to the SKREEM for service. The SKREEM also stores in its memory the Vehicle Identification Number (VIN), which it learns through a bus message from the assembly plant tester. The SKIS scrambles the information that is communicated between its components in order to reduce the possibility of unauthorized SKREEM access and/or disabling.

REMOTE KEYLESS ENTRY (RKE)

The RKE transmitter uses radio frequency signals to communicate with the SKREEM. The SKREEM is on the PCI bus. When the operator presses a button on the transmitter, it sends a specific request to the SKREEM. In turn the SKREEM sends the appropriate request over the PCI Bus to the:

- Body Control Module (BCM) to control the door lock and unlock functions, the liftgate lock and unlock functions, the arming and disarming of the Vehicle Theft Security System (VTSS) (if equipped), and the activation of illuminated entry.
- Integrated Power Module (IPM) to activate the park lamps, the headlamps, and the horn for horn chirp. If requested, the BCM sends a request over the PCI Bus to the:

TIRE PRESSURE MONITORING (TPM)

If equipped with the Tire Pressure Monitoring (TPM) System, each of the vehicles four wheels will have a valve stem with a pressure sensor and radio transmitter built in. Signals from the tire pressure sensor/transmitter are received and interpreted by the SKREEM.

A sensor/transmitter in a mounted wheel will broadcast its detected pressure once per minute when the vehicle is moving faster than 15 mph (24 km/h). Each sensor/transmitter's broadcast is uniquely coded so that the SKREEM can determine the location.

OPERATION

SENTRY KEY IMMOBILIZER

The Sentry Key Remote Entry Module (SKREEM) receives an encrypted Radio Frequency (RF) signal from the transponder key. The SKREEM then decrypts the signal and broadcasts the requested remote commands to the appropriate modules in the vehicle over the Programmable Communication Interface (PCI) data bus. A valid transponder key ID must be incorporated into the RF signal in order for the SKREEM to pass the message on to the appropriate modules.

Automatic transponder key synchronization is done by the SKREEM if a valid transponder key is inserted into the ignition cylinder, and the ignition is turned ON. This provides a maximum operation window for RKE functions.

Each Sentry Key Remote Entry System (SKREES) consists of a SKREEM and a transponder key. Each system has a secret key code unique to that system. The secret key is electronically coded in the SKREEM and in all programmed transponder keys. It is used for immobilization and RKE functions for data security. In addition, each transponder key will have a unique identification. For North America, the options are a 3-button or 6 button integrated keys. For Export, the options are 2-button or 5 button key fobs. (Export does not get the integrated key).

SENTRY KEY REMOTE ENTRY MODULE (Continued)

When the ignition switch is moved to the RUN position, the SKREEM transmits an Radio Frequency (RF) signal to the transponder in the ignition key. The SKREEM then waits for a response RF signal from the transponder in the key. If the response received identifies the key as valid, the SKREEM sends a ″valid key″ message to the Powertrain Control Module (PCM) over the Programmable Communication Interface (PCI) data bus. If the response received identifies the key as invalid or no response is received from the transponder in the ignition key, the SKREEM sends an ″invalid key″ message to the PCM. The PCM will enable or disable engine operation based upon the status of the SKREEM messages. It is important to note that the default condition in the PCM is ″invalid key.″ Therefore, if no response is received by the PCM, the engine will be immobilized after two (2) seconds of running.

The SKREEM also sends indicator light status messages to the Mechanical Instrument Cluster (MIC) to operate the light. This is the method used to turn the light ON solid or to flash it after the indicator light test is complete to signify a fault in the SKREES. If the light comes ON and stays ON solid after the indicator light test, this signifies that the SKREEM has detected a system malfunction and/or that the SKREES has become inoperative. If the SKREEM detects an invalid key **OR** a key-related fault exists, the indicator light will flash following the indicator light test. The SKREEM may also request an audible chime if the customer key programming feature is available and the procedure is being utilized (Refer to 8 - ELECTRICAL/VEHICLE THEFT SECURITY/TRANSPONDER KEY - STANDARD PROCEDURE).

REMOTE KEYLESS ENTRY (RKE)

After pressing the lock button on the RKE transmitter, all of the door locks will lock, the illuminated entry will turn off (providing all doors are closed), and the VTSS (if equipped) will arm. After pressing the unlock button, on the RKE transmitter, one time, the driver door lock will unlock, the illuminated entry will turn on the courtesy lamps, and the VTSS (if equipped) will disarm. After pressing the unlock button a second time, the remaining door locks will unlock. The Electronic Vehicle Information Center (EVIC) or the DRBIII® scan tool can reprogram this feature to unlock all of the door locks with one press of the unlock button. If the vehicle is equipped with the memory system, the memory message will identify which transmitter (1 or 2) sent the signal.

The SKREEM is capable of retaining up to 8 individual access codes (8 transmitters). If the PRNDL is in any position except park, the SKREEM will disable the RKE. The 4 button transmitter uses 1-CR2032 battery. The minimum battery life is approximately 4.7 years based on 20 transmissions a day at 84°F (25°C). Use the DRBIII® scan tool or the Miller Tool 9001 RF Detector to test the RKE transmitter. Use the DRBIII® or the customer programming method to program the RKE system. However, the SKREEM will only allow RKE programming when the ignition is in the ON position, the PRNDL is in park position, and the VTSS (if equipped) is disarmed.

TIRE PRESSURE MONITORING (TPM)

The SKREEM monitors the signals from the tire pressure sensor/transmitters and determines if any tire has gone below the low pressure threshold LOW TIRE PRESSURE THRESHOLDS table.

LOW TIRE PRESSURE THRESHOLDS

SYSTEM STATUS INDICATOR	TIRE PRESSURE
ON	193 kPa (28 PSI)
OFF	227 kPa (33 PSI)

CRITICAL AND NON-CRITICAL SYSTEM ALERTS

CRITICAL: A critical alert will be triggered when a tire pressure has gone below a set threshold pressure. The EVIC display will display “X TIRE(S) LOW PRESSURE”. “X” will be the number of tires reporting low pressure. The message will display for the duration of the current ignition cycle or until an EVIC button is pressed. If the display is removed without correcting the condition, it will reappear 300 seconds to warn the driver of the low pressure condition.

NON-CRITICAL: A non-critical alert will be triggered when no signal is received from a sensor/transmitter. The EVIC display in the cluster will display “SERVICE TIRE SYSTEM SOON.”

DIAGNOSIS AND TESTING - SENTRY KEY REMOTE ENTRY MODULE

For proper diagnosis and testing of the Sentry Key Remote Entry Module (SKREEM), use a DRBlll® and refer to the proper Body Diagnostic Procedures information.

SENTRY KEY REMOTE ENTRY MODULE (Continued)

REMOVAL

(1) Disconnect and isolate the battery negative cable.

(2) Remove the Steering Column Opening Cover (Refer to 23 - BODY/INSTRUMENT PANEL/STEERING COLUMN OPENING COVER - REMOVAL).

(3) Remove the steering column upper and lower shrouds (Refer to 19 - STEERING/COLUMN/UPPER SHROUD - REMOVAL) and (Refer to 19 - STEERING/COLUMN/LOWER SHROUD - REMOVAL).

(4) Disengage the steering column wire harness from the Sentry Key Remote Entry Module (SKREEM).

(5) Remove the one screws securing the SKREEM to the steering column.

(6) Rotate the SKREEM upwards and then to the side away from the steering column to slide the SKREEM antenna ring from around the ignition switch lock cylinder housing.

(7) Remove the SKREEM from the vehicle.

INSTALLATION

(1) Slip the Sentry Key Remote Entry Module (SKREEM) antenna ring around the ignition switch lock cylinder housing. Rotate the SKREEM downwards and then towards the steering column.

(2) Install the one screws securing the SKREEM to the steering column.

(3) Connect the steering column wire harness to the SKREEM.

(4) Install the steering column upper and lower shrouds (Refer to 19 - STEERING/COLUMN/UPPER SHROUD - INSTALLATION) and (Refer to 19 - STEERING/COLUMN/LOWER SHROUD - INSTALLATION).

(5) Install the Steering Column Opening Cover (Refer to 23 - BODY/INSTRUMENT PANEL/STEERING COLUMN OPENING COVER - INSTALLATION)

(6) Connect the battery negative cable.

TRANSPONDER KEY

DESCRIPTION

The Sentry Key Remote Entry System (SKREES) uses a transponder chip that is integral to the circuit board of the integrated ignition key (SKREES and RKE incorporated) to communicate with the Sentry Key Remote Entry Module (SKREEM). Ignition keys are supplied with the vehicle when it is shipped from the factory.

For export vehicles equipped with SKREES, the transponder chip is undermolded within the head of the key.

OPERATION

Each Sentry Key has a unique transponder identification code permanently programmed into it by the manufacturer. Likewise, the Sentry Key Remote Entry Module (SKREEM) has a unique ″Secret Key″ code programmed into it by the manufacturer as well. When a Sentry Key is programmed into the memory of the SKREEM, the SKREEM stores the transponder identification code from the Sentry Key, and the Sentry Key learns the ″Secret Key″ code from the SKREEM. Once the Sentry Key learns the ″Secret Key″ code of the SKREEM, it is also permanently programmed into the transponder's memory. Therefore, blank keys for the Sentry Key Remote Entry System (SKREES) must be programmed by the SKREEM in addition to being cut to match the mechanical coding of the ignition lock cylinder. Refer to Electrical, Vehicle Theft Security, Transponder Key, Standard Procedure - Transponder Programming.

The Sentry Key's transponder is within the range of the SKREEM's transceiver antenna ring when it is inserted into the ignition lock cylinder. When the ignition switch is turned to the ON position, the SKREEM communicates with the Sentry Key via a radio frequency (RF) signal. The SKREEM determines if a valid key is present based on the information it receives from the Sentry Key. If a valid key is detected, that fact is communicated to the PCM via the PCI bus and the vehicle is allowed to continue running. If an invalid key is received by the PCM or no status at all is communicated, the vehicle will stall after two (2) seconds of running. The indicator light will be flashing at this point. The Sentry Key's transponder can not be repaired. If it is faulty or damaged, it must be replaced.

Common communication problems:

- Two transponder keys too close together.
- Speed Pass too close to transponder key.

Solid indicator that there is a system failure.

- Loss of PCM communication.
- Failed antenna circuit.

STANDARD PROCEDURE - TRANSPONDER PROGRAMMING

USING A DRBIII® SCAN TOOL

All Sentry Keys included with the vehicle are preprogrammed to work with the Sentry Key Remote Entry System (SKREES) when it is shipped from the factory. The Sentry Key Remote Entry Module (SKREEM) can be programmed to recognize up to a total of eight Sentry Keys. When programming a blank Sentry Key transponder, the key must first be cut to match the ignition lock cylinder of the vehicle for which it will be used. The vehicle's four digit PIN

TRANSPONDER KEY (Continued)

code will be required to complete this task since you will need it to enter the Secured Access Mode in the SKREEM. The following steps must be completed using a DRBIII® scan tool:

(1) Insert the blank key into the ignition and turn it to the RUN position.

(2) Using a DRBIII® scan tool, select ″Theft Alarm,″ ″SKREEM,″ ″Miscellaneous,″ and then ″Program New Key.″

(3) Enter the four digit PIN code using the DRBIII® scan tool. When programming is completed, the SKREEM will exit Secured Access Mode and the DRBIII® scan tool will display the results of your attempt to program the key. One of five distinct results may be displayed. All five are listed below:

- **″Programming Successful″** is displayed if the Sentry Key programming is successful.
- **″Learned Key in Ignition″** is displayed if the key in the ignition has already been programmed into that vehicle's SKREEM.
- **″Eight Keys Already Learned (At The Maximum) Programming Not Done″** is displayed if eight keys have already been programmed into the SKREEM. In this case, if a new key needs to be added due to a lost or defective key, the ″Erase All Keys″ command (which requires entering the Secured Access Mode) has to be performed. Following the ″Erase All Keys″ command, all keys that will be used to operate the vehicle **MUST** be reprogrammed to the SKREEM.
- **″Programming Not Attempted″** is displayed after an ″Erase All Keys″ function is executed.
- **″Programming Key Failed″** is displayed if further diagnosis is required.

To learn additional keys, turn the ignition OFF, remove the learned key, insert the next new blank key, and repeat the steps from the beginning.

"CUSTOMER LEARN" MODE

This feature is only available on domestic vehicles or those which have a U.S. country code designator. This procedure requires access to at least two valid Sentry Keys. If two valid Sentry Keys are not available, Sentry Key programming will require the use of a DRBIII® scan tool.

The steps required to program Sentry Keys with two valid Sentry Keys follows:

(1) Obtain the blank Sentry Key(s) that need to be programmed. Cut the keys to match the ignition lock cylinder mechanical key codes.

(2) Insert one of the two valid Sentry Keys into the ignition switch and turn the ignition switch to the ON position.

(3) After the ignition switch has been in the ON position for longer than three seconds, but no more than fifteen seconds, cycle the ignition switch back to the OFF position. Replace the first valid Sentry Key in the ignition lock cylinder with the second valid Sentry Key and turn the ignition switch back to the ON position. The second valid Sentry Key must be inserted within 15 seconds of removing the first valid Sentry key.

(4) About ten seconds after the completion of Step 3, the indicator light will start to flash and a single audible chime tone will sound to indicate that the system has entered the ″Customer Learn″ programming mode.

(5) Within sixty seconds of entering the ″Customer Learn″ programming mode, turn the ignition switch to the OFF position, replace the valid Sentry Key with a blank Sentry Key transponder, and turn the ignition switch back to the ON position.

(6) About ten seconds after the completion of Step 5, a single audible chime tone will sound and the indicator light will stop flashing and stay on solid for three seconds and then turn off to indicate that the blank Sentry Key has been successfully programmed. The SKREES will immediately exit the ″Customer Learn″ programming mode and the vehicle may be started using the newly programmed Sentry Key.

NOTE: The Remote Keyless Entry (RKE) Transmitter will also be programmed during this procedure.

These steps must be completed in their entirety for each additional Sentry Key to be programmed. If any of the above steps are not completed in the given sequence, or within the allotted time, the SKREES will exit the ″Customer Learn″ programming mode and the programming will be unsuccessful. The SKREES will also automatically exit the ″Customer Learn″ programming mode if:

- It sees a non-blank Sentry Key when it should see a blank.
- If it has already programmed four (4) valid Sentry Keys.
- If the ignition switch is turned to the OFF position for more than about fifty (50) seconds.

NOTE: If you attempt to start the vehicle while in "Customer Learn" mode (LED flashing), the vehicle will behave as though an invalid key is being used (i.e. the engine will stall after two (2) seconds of running). No faults will be logged.

NOTE: Once a Sentry Key has been programmed to a particular vehicle, it cannot be used on any other vehicle.

VTSS/SKIS INDICATOR LAMP

DESCRIPTION

The Sentry Key Remote Entry System (SKREES) uses an indicator light to convey information on the status of the system to the customer. This light is shared with the Vehicle Theft Security System (VTSS). The light is located in the Mechanical Instrument Cluster (MIC). The VTSS status is controlled by the Body Control Module (BCM), via Programmable Communication Interface (PCI) data bus communication with the MIC, based upon messages it receives from the Sentry Key Remote Entry Module (SKREEM) on the PCI data bus.

OPERATION

The Mechanical Instrument Cluster (MIC) performs a four second bulb check via PCI communication with the Sentry Key Remote Entry Module (SKREEM). After the bulb check, the lamp is controlled according to SKREEM messages. Then, the SKREEM sends messages to the BCM to operate the light based upon the results of the Sentry Key Remote Entry System (SKREES) self tests. The light may be actuated in two possible ways, flashing or on solid. If the light comes on and stays on solid after a power-up test, this indicates that the SKREEM has detected a system malfunction. If the SKREEM detects an invalid key when the ignition switch is moved to the ON position, it sends a message on the PCI bus to the MIC, to flash the light. The SKREEM can also send a message to flash the light and generate a single audible chime at the same time. These two events occurring simultaneously indicate that the SKIS has been placed into the ″Customer Learn″ mode (Refer to 8 - ELECTRICAL/VEHICLE THEFT SECURITY/TRANSPONDER KEY - STANDARD PROCEDURE). If the light comes on and stays on after the power-up test, diagnosis of the SKREES should be performed using a DRBIII® scan tool and the appropriate Body Diagnostic Procedures information. The light is a Light Emitting Diode (LED) and is not a serviceable component.

WIPERS/WASHERS

TABLE OF CONTENTS

page

WIPERS/WASHERS
DESCRIPTION 1
OPERATION 2
DIAGNOSIS AND TESTING
DIAGNOSIS AND TESTING - FRONT WIPER SYSTEM 2
DIAGNOSIS AND TESTING - FRONT WIPER/WASHER SWITCH 2
DIAGNOSIS AND TESTING - FAILED PARK SWITCH 2
DIAGNOSIS AND TESTING - REAR WIPER SYSTEM 4
DIAGNOSIS AND TESTING - WASHER SYSTEM 5
FRONT WIPER ARMS
STANDARD PROCEDURE - FRONT WIPER ARM ALIGNMENT 9
REMOVAL 9
INSTALLATION 9
FRONT WIPER MOTOR
REMOVAL 9
INSTALLATION 10
REAR WIPER ARM
REMOVAL 10
INSTALLATION 10
REAR WIPER MOTOR
REMOVAL 10
INSTALLATION 10
REAR WIPER/WASHER SWITCH
DESCRIPTION 10
OPERATION 11
WASHER FLUID LEVEL SWITCH
REMOVAL 11
INSTALLATION 11
WASHER HOSES
REMOVAL 11
INSTALLATION 12
WASHER PUMP MOTOR
REMOVAL 12
INSTALLATION 12
WASHER RESERVOIR
REMOVAL 12
INSTALLATION 13
WIPER BLADES
REMOVAL 13
CLEANING 13
INSTALLATION 13
WIPER LINKAGE
REMOVAL 13
INSTALLATION 14
WIPER MODULE
REMOVAL 14
INSTALLATION 14

WIPERS/WASHERS

DESCRIPTION

FRONT WIPER/WASHER SYSTEM

The windshield wipers can be operated with the windshield wiper switch when the ignition switch is in the RUN or ACCESSORY positions. The windshield wiper system is protected by a 30 amp fuse (9) located in the Power Distribution Center (PDC) part of the Integrated Power Module (IPM) in the engine compartment. The wiper/washer switch is integral to the multi-function switch. It is a resistive MUX switch that sends inputs to the BCM to operate the wiper/washer system.

REAR WIPER/WASHER SYSTEM

The rear windshield wiper and washers can be operated when the ignition switch is in the RUN position.

If equipped with Manual Temperature Controls (MTC), the rear wiper/washer switch is integral to the HVAC control unit. It replaces what was formerly the ON/OFF switch. If equipped with Automatic Temperature Controls (ATC), the rear wiper/washer switch is located on the accessory switch panel in the center stack of the instrument panel.

WIPERS/WASHERS (Continued)

OPERATION

FRONT WIPER/WASHER SYSTEM

The windshield washer circuit is protected by a 15 amp Cartridge Fuse located in the IPM. The wiper motor has permanent magnetic fields. The speeds are determined by current flow to the appropriate set of brushes inside the motor. The current flow is controlled by the multi-function switch. The high speed/ low speed relays are located in the IPM. The speed sensitive intermittent wiper is controlled by the Body Control Module (BCM). The intermittent mode, with the vehicle traveling greater than 10.4 mph, has a range of 0.5 to 18 seconds. With the vehicle traveling less than 10.4 mph, the time delay doubles to a range of 1 to 36 seconds. The wiper arms will park at the base of the windshield just above the cowl cover after the wiper switch is turned OFF.

The windshield wiper motor and linkage is located in an integral wiper unit at the rear of the engine compartment. The wiper unit must be removed to gain access to the wiper motor.

The front and rear washer systems share the same washer pump motor.

REAR WIPER/WASHER SYSTEM

When rear wiper operation is required, the BCM will provide ignition ON voltage to the rear wiper motor (Export and ATC equipped vehicles only). When the wiper switch is turned OFF, the BCM provides circuit ground to operate the motor until the wipe cycle is complete and the wiper arm returns to the base of the rear window.

Switch only offers an intermittent rear wiper mode. The wiper motor will cycle every 7 seconds. The intermittent delay time is also adjusted based upon vehicle speed. With the vehicle traveling greater than 50 mph, the cycle changes to every 5 seconds.

When rear washer is requested by depressing and holding down the switch, the BCM then provides a ground for the washer motor. Until the switch is released, the motor will be in a continuous wipe mode, then return to an intermittent wipe mode.

DIAGNOSIS AND TESTING

DIAGNOSIS AND TESTING - FRONT WIPER SYSTEM

The windshield wiper system operates in several modes:

- Low and high speed normal wipe
- Speed sensitive intermittent wipe
- Wipe after wash
- Park (switch OFF)

The windshield wiper circuits are continuously monitored and controlled by the Body Control Module (BCM). If a problem occurs in the electronic components, wiring, switch (except integral motor park switch) and wiper motor a Diagnostic Trouble Code (DTC) will be stored in the BCM memory. DTC's can be retrieved using a DRB III® scan tool. Refer to the proper Body Diagnostic Procedures manual for DTC descriptions and retrieval information.

The windshield wiper park switch and circuit is monitored by the BCM. The park switch and circuit can be tested using the Wiper System Diagnosis table.

DIAGNOSIS AND TESTING - FRONT WIPER/WASHER SWITCH

(1) Remove the multi-function switch (Refer to 8 - ELECTRICAL/LAMPS/LIGHTING - EXTERIOR/ MULTI-FUNCTION SWITCH - REMOVAL).

(2) Using an ohmmeter check resistance readings between switch pins. Refer to the WIPER/WASHER SWITCH RESISTANCE table.

WIPER/WASHER SWITCH RESISTANCE

SWITCH POSITION	RESISTANCE BETWEEN
OFF	1 AND 2 = 23.9K Ω ± 5%
DELAY POSITION	
1ST	1 AND 2 = 7.9K Ω ± 5%
2ND	1 AND 2 = 4.6K Ω ± 5%
3RD	1 AND 2 = 2.9K Ω ± 5%
4TH	1 AND 2 = 1.9K Ω ± 5%
5TH	1 AND 2 = 1.3K Ω ± 5%
LOW	1 AND 2 = 670 Ω ± 5%
HIGH	1 AND 2 = 240 Ω ± 5%
WASH	1 AND 4 = 5.9K Ω ± 5%

DIAGNOSIS AND TESTING - FAILED PARK SWITCH

If the wiper park switch has failed, the windshield wipers will operate as follows:

- **SWITCH OFF** - Wipers stop in current location regardless of the park signal.
- **INTERMITTENT MODE** - Wipers operate continuously or at low speed for one or more extra wipes.
- **LOW SPEED** - Wipers operate at low speed.
- **HIGH SPEED** - Wipers operate at high speed.

WIPERS/WASHERS (Continued)

- **WIPE AFTER WASH** - Wipers operate at low speed in any mode setting. Wipers operate only while the wash button is depressed with switch in the OFF mode and wipers stop in mid-cycle when button is released.

The windshield wiper park switch and circuit is monitored by the BCM. The park switch and circuit can be tested using the WIPER SYSTEM DIAGNOSIS table.

WIPER SYSTEM DIAGNOSIS

CONDITION	POSSIBLE CAUSES	CORRECTION
WIPER BLADES DO NOT PARK PROPERLY	1. WIPER ARMS IMPROPERLY PARKED.	1. REMOVE WIPER ARMS AND REPARK. REFER TO WIPER ARM REMOVAL AND INSTALLATION.
	2. WIPER ARMS ARE LOOSE ON PIVOT SHAFT.	2. REMOVE WIPER ARM AND REPARK. REFER TO WIPER ARM REMOVAL AND INSTALLATION.
	3. MOTOR CRANK LOOSE AT OUTPUT SHAFT.	3. REMOVE WIPER ARM, RUN WIPER MOTOR TO PARK POSITION AND REMOVE THE MODULE. WITHOUT ROTATING THE MOTOR OUTPUT SHAFT, REMOVE THE CRANK AND CLEAN ANY FOREIGN MATTER FROM THE MOTOR SHAFT. INSTALL THE MOTOR CRANK IN ITS ORIGINAL POSITION.
	4. STRIPPED WIPER ARM HEAD.	4. REPLACE WIPER ARM.
MOTOR STOPS IN ANY POSITION WHEN THE SWITCH IS TURNED OFF	OPEN PARK CIRCUIT.	CHECK PARK SWITCH BY DISCONNECTING THE WIRE CONNECTOR AND APPLY BATTERY VOLTAGE TO PIN 4. PLACE A JUMPER WIRE FROM PIN 2 TO PIN 3 AND THEN TO AN EXTERNAL GROUND. REPLACE MOTOR IF MOTOR DOES NOT PARK.
MOTOR WILL NOT STOP WHEN THE SWITCH IS TURNED OFF	1. FAULTY SWITCH.	1. CHECK SWITCH IN LOW, HIGH AND INTERMITTENT POSITION.
	2. LACK OF DYNAMIC BRAKE ON WET GLASS.	2. ENSURE PARK SWITCH HAS CLEAN GROUND.
WIPER BLADES SLAP AGAINST COWL SCREEN OR WINDOW MOLDINGS.	WIPER ARMS ARE PARKED INCORRECTLY.	PARK WIPER ARMS. REFER TO WIPER ARM ADJUSTMENT.
BLADES CHATTER	1. FOREIGN SUBSTANCE SUCH AS POLISH ON GLASS OR BLADES.	1. CLEAN GLASS AND BLADE ELEMENT WITH NON-ABRASIVE CLEANER.
	2. ARMS TWISTED, BLADE AT WRONG ANGLE ON GLASS.	2. REPLACE ARM.
	3. BLADE STRUCTURE BENT.	3. REPLACE BLADE.
	4. BLADE ELEMENT HAS PERMANENT SET.	4. REPLACE BLADE.

WIPERS/WASHERS (Continued)

CONDITION	POSSIBLE CAUSES	CORRECTION
WIPER KNOCK AT REVERSAL	1. LINKAGE BUSHINGS WORN.	1. REPLACE WORN LINK. REFER TO WIPER LINKAGE REMOVAL AND INSTALLATION.
	2. ARMATURE ENDPLAY IN MOTOR.	2. REPLACE WIPER MOTOR. REFER TO WIPER MOTOR REMOVAL AND INSTALLATION.
WIPER MOTOR WILL NOT RUN	1. BLOWN FUSE.	1. REPLACE FUSE, AND RUN SYSTEM.
	2. NEW FUSE BLOWS.	2. CHECK FOR SHORT IN WIRING OR SWITCH.
	3. NEW FUSE BLOWS.	3. REPLACE FUSE, REMOVE MOTOR CONNECTOR, TURN SWITCH ON, FUSE DOES NOT BLOW, REPLACE MOTOR.
	4. NO VOLTAGE AT MOTOR.	4. CHECK SWITCH AND WIRING HARNESS. REFER TO WIRING DIAGRAMS.
	5. POOR GROUND.	5. REPAIR GROUND WIRE CONNECTION AS NECESSARY.

DIAGNOSIS AND TESTING - REAR WIPER SYSTEM

The rear window wiper system operates in several modes:

- Continuous wipe (Export and ATC equipped vehicles only)
- Intermittent wipe
- Wash
- Wipe after wash

The windshield wiper circuits are continuously monitored and controlled by the Body Control Module (BCM). If a problem occurs in the electronic components, wiring, switch (except integral motor park switch) and wiper motor a Diagnostic Trouble Code (DTC) will be stored in the BCM memory. The DTC(s) can be retrieved using a DRB III® scan tool.

WIPERS/WASHERS (Continued)

DIAGNOSIS AND TESTING - WASHER SYSTEM

WASHER SYSTEM DIAGNOSIS

CONDITION	POSSIBLE CAUSES	CORRECTION
WASHER MOTOR	1. IPM FUSE #33 BLOWN OR DEFECTIVE.	1. CHECK FUSE #33 IN THE IPM. REPLACE IF NOT OK.
	2. IPM FUSE #33 LOOSE.	2. PROPERLY INSTALL IPM FUSE #33 IN SOCKET.
BLOWN FUSE WHEN IGNITION SWITCH IS IN THE RUN OR ACCESSORY POSITION.	1. SHORT IN IPM BETWEEN FUSE #33 AND PIN 11 OR PIN 1.	1. REFER TO IPM DIAGNOSTIC PROCEDURES IN WIRING DIAGRAMS.
	2. SHORT IN MOTOR POWER CIRCUIT.	2. SHORT OR DEFECTIVE CIRCUIT BETWEEN IPM PIN 11 AND WASHER MOTOR CONNECTOR POSITIVE TERMINAL 2. IF NOT OK, REPAIR CIRCUIT.
	3. SHORT IN WASHER PUMP MOTOR.	3. REPLACE WASHER PUMP MOTOR.
WASHER MOTOR RUNS WHEN IGNITION SWITCH IN RUN OR ACCESSORY POSITION.	1. SHORT IN IPM BETWEEN WASHER PUMP MOTOR LSD AND PIN 20.	1. REFER TO IPM DIAGNOSTIC PROCEDURES IN WIRING DIAGRAMS.
	2. DEFECTIVE FRONT WASHER LSD IN IPM.	2. REFER TO IPM DIAGNOSTIC PROCEDURES IN WIRING DIAGRAMS.
	3. SHORT IN MOTOR GROUND CIRCUIT.	3. SHORT OR DEFECTIVE CIRCUIT BETWEEN IPM PIN 20 AND MOTOR CONNECTOR NEGATIVE TERMINAL 1. IF NOT OK, REPAIR CIRCUIT.

WIPERS/WASHERS (Continued)

CONDITION	POSSIBLE CAUSES	CORRECTION
WASHER SYSTEM WILL NOT FLOW WASHER FLUID.	1. NO WASHER FLUID IN RESERVOIR.	1. FILL WASHER RESERVOIR.
	2. IPM FUSE #33 BLOWN.	2. SHORT OR DEFECTIVE CIRCUIT BETWEEN IPM PIN 11 AND WASHER PUMP MOTOR CONNECTOR POSITIVE TERMINAL 2. INTERNAL SHORT IN IPM. IF NOT OK, REPAIR CIRCUIT OR REFER TO IPM DIAGNOSTIC PROCEDURES IN WIRING DIAGRAMS.
	3. WASHER HOSE NOT FLOWING WASHER FLUID.	3. ASSURE WASHER HOSE IS NOT PINCHED, LOOSE, BROKEN OR DISCONNECTED. IF NOT OK, PROPERLY ROUTE OR REPAIR WASHER HOSE.
	4. MOTOR CONNECTOR LOOSE.	4. PROPERLY SEAT AND LOCK CONNECTOR TO MOTOR.
	5. MOTOR CONNECTOR TERMINALS BENT.	5. REPAIR TERMINALS AND PROPERLY SEAT CONNECTOR TO MOTOR.
	6. OPEN CIRCUIT TO OR FROM WASHER SELECT SWITCH (EXPORT AND ATC EQUIPPED VEHICLES ONLY).	6. OPEN OR DEFECTIVE CIRCUIT BETWEEN IPM BODY CONTROLLER PIN 27 AND WASHER SELECT SWITCH PIN 4, OR OPEN OR DEFECTIVE CIRCUIT BETWEEN IPM BODY CONTROLLER PIN 22 AND WASHER SELECT SWITCH PIN 2. IF NOT OK, REPAIR CIRCUIT.
	7. OPEN OR DEFECTIVE WASHER SELECT SWITCH.	7. REFERO TO THE PROPER BODY DIAGNOSTIC PROCEDURES INFORMATION ON MANUAL TEMPERATURE CONTROLS.
	8. OPEN POWER CIRCUIT TO MOTOR.	8. OPEN OR DEFECTIVE CIRCUIT BETWEEN IPM CONNECTOR TERMINAL 11 AND WASHER MOTOR CONNECTOR POSITIVE TERMINAL 2. INTERNAL OPEN IN IPM. IF NOT OK, REPAIR CIRCUIT OR REFER TO IPM DIAGNOSTIC PROCEDURES IN WIRING DIAGRAMS.
	9. OPEN OR DEFECTIVE MOTOR GROUND CIRCUIT.	9. OPEN OR DEFECTIVE CIRCUIT BETWEEN IPM CONNECTOR TERMINAL 20 AND WASHER MOTOR CONNECTOR NEGATIVE TERMINAL 1. INTERNAL OPEN IN IPM. IF NOT OK, REPAIR CIRCUIT OR REFER TO IPM DIAGNOSTIC PROCEDURES IN WIRING DIAGRAMS.
	10. OPEN CIRCUIT IN MOTOR.	10. CHECK FOR OPEN CIRCUIT IN MOTOR BETWEEN POSITIVE TERMINAL 2 AND NEGATIVE TERMINAL 1. IF NOT OK, REPLACE WASHER MOTOR.
	11. SEIZED MOTOR BEARINGS.	11. APPLY DIRECT BATTERY VOLTAGE TO MOTOR TERMINALS. IF MOTOR DOES NOT RUN, REPLACE MOTOR.

WIPERS/WASHERS (Continued)

CONDITION	POSSIBLE CAUSES	CORRECTION
	12. NO BUS MESSAGE FROM MTC CONTROL (MANUAL TEMP. CONTROL ONLY).	12. CHECK FOR CORRECT PCI BUS MESSAGE WITH DRBIII®.
COWL GRILLE NOZZLE WILL NOT FLOW.	1. FROZEN NOZZLE.	1. MOVE VEHICLE INTO HEATED AREA TO ALLOW TIME TO THAW NOZZLE. ASSURE WASHER FLUID IS PROPERLY BLENDED FOR AMBIENT OUTSIDE TEMPERATURES.
	2. NOZZLE HOSE NOT FLOWING.	2. ASSURE NOZZLE HOSE IS NOT PINCHED, LOOSE, BROKEN, OR DISCONNECTED. IF NOT OK, PROPERLY ROUTE OR REPAIR NOZZLE HOSE.
	3. NOZZLE HOSE PLUGGED BY CONTAMINATION.	3. CLEAN NOZZLE HOSE OF CONTAMINATION. DETERMINE SOURCE OF CONTAMINATION. INSPECT RESERVOIR FOR EXCESSIVE CONTAMINATION. CLEAN SYSTEM AS REQUIRED.
	4. NOZZLE PLUGGED BY CONTAMINATION.	4. CLEAN NOZZLE OF CONTAMINATION OR REPLACE NOZZLE. DETERMINE SOURCE OF CONTAMINATION. INSPECT RESERVOIR FOR EXCESSIVE CONTAMINATION. CLEAN SYSTEM AS REQUIRED.
	5. DEFECTIVE WASHER HOSE CHECK VALVE.	5. REPLACE COWL GRILLE PANEL WASHER HOSE/CHECK VALVE ASSEMBLY.
WASHER FLUID OUTPUT IS LOW.	1. PARTIALLY PINCHED HOSE.	1. ASSURE WASHER HOSE IS NOT PARTIALLY PINCHED. IF NOT OK, PROPERLY ROUTE HOSE.
	2. FRONT REAR VALVE DEFECTIVE.	2. REPLACE WASHER PUMP.
	3. WORN OUT WASHER PUMP.	3. REPLACE WASHER PUMP.
COWL GRILLE NOZZLE STREAM OVERSHOOTS WINDSHIELD.	1. NOZZLE NOT SEATED IN COWL GRILLE.	1. ASSURE NOZZLE IS SNAPPED IN PLACE.
WIPER WILL NOT CYCLE WHEN WASHER SELECT SWITCH IS DEPRESSED.	1. DEFECTIVE IPM.	1. REFER TO IPM DIAGNOSTIC PROCEDURES IN WIRING DIAGRAMS.
	2. DEFECTIVE IPM/BODY CONTROLLER.	2. REFER TO IPM/BODY CONTROLLER DIAGNOSTIC PROCEDURES IN WIRING DIAGRAMS.
	3. REAR WIPER OUTPUT SHORT FAULT.	3. A GROUND SHORT DETECTED BETWEEN BCM AND REAR WIPER MOTOR. CLEAR FAULT. IF IT WON'T CLEAR, REPAIR SHORT
	4. REAR WIPER OUTPUT OPEN FAULT.	4. AN OPEN CIRCUIT DETECTED BETWEEN BCM AND REAR WIPER MOTOR. CLEAR FAULT. IF IT WON'T CLEAR, REPAIR OPEN CIRCUIT.

WIPERS/WASHERS (Continued)

CONDITION	POSSIBLE CAUSES	CORRECTION
	5. NO BUS MESSAGE FROM MTC CONTROL (MANUAL TEMP. CONTROL ONLY).	5. REFER TO PROPER BODY DIAGNOSTIC INFORMATION OR USE DRBIII® TO CHECK PROPER MESSAGE STATUS.
WASHER OPERATES INTERMITTENTLY.	1. INTERMITTENT MOTOR GROUND.	INTERMITTENT GROUND BETWEEN MOTOR CONNECTOR TERMINAL 1 AND IPM PIN 20.
	2. INTERMITTENT OPEN IN WASHER SELECT SWITCH.	2. (Refer to 8 - ELECTRICAL/LAMPS/ LIGHTING - EXTERIOR/MULTI-FUNCTION SWITCH - DIAGNOSIS AND TESTING).
	3. DEFECTIVE WASHER MOTOR.	3. REPLACE WASHER PUMP.
LOW WASHER FLUID LEVEL INDICATOR INOPERATIVE.	1. LOOSE FLUID LEVEL SENSOR CONNECTOR.	1. PROPERLY SEAT CONNECTOR TO LOW FLUID LEVEL SENSOR AND LOCK.
	2. OPEN POWER CIRCUIT TO FLUID LEVEL SENSOR.	2. OPEN OR DEFECTIVE CIRCUIT BETWEEN IPM CONNECTOR TERMINAL 7 AND THE LOW FLUID LEVEL SENSOR CONNECTOR TERMINAL 2. IF NOT OK, REPAIR CIRCUIT.
	3. OPEN GROUND CIRCUIT.	3. OPEN OR DEFECTIVE CIRCUIT BETWEEN FLUID LEVEL SENSOR CONNECTOR TERMINAL 1 AND FLOOR GROUND 1.
	4. DEFECTIVE IPM.	4. REFER TO IPM DIAGNOSTIC PROCEDURES IN WIRING DIAGRAMS.
	5. FLUID LEVEL SENSOR SWITCH OPEN OR DEFECTIVE.	5. APPLY OHMMETER TO THE SWITCH TERMINALS TO CHECK FOR COMPLETE CIRCUIT. CYCLE SWITCH FLOAT BACK AND FORTH BY FILLING AND DEPLETING RESERVOIR OF WASHER FLUID TO CHECK FOR PROPER SWITCH FUNCTION. IF NOT OK, REPLACE LOW FLUID LEVEL SENSOR SWITCH.
LEAKING WASHER FLUID.	1. PUMP OR SENSOR GROMMET DEFECTIVE.	1. PROPERLY SEAT PUMP OR SENSOR IN GROMMET. IF NOT OK, REPLACE PUMP OR SENSOR GROMMET.
	2. LEAKING WASHER PUMP.	2. REPLACE WASHER PUMP.
	3. LEAKING FLUID LEVEL SENSOR.	3. REPLACE FLUID LEVEL SENSOR.
	4. LEAKING OR DEFECTIVE RESERVOIR BODY.	4. REPLACE RESERVOIR BODY.

FRONT WIPER ARMS

STANDARD PROCEDURE - FRONT WIPER ARM ALIGNMENT

(1) Verify wiper blade element condition and wiper arm spring tension. Run wipers in low speed mode while applying water to the windshield. Observe the wiper blade that is chattering or skipping across the windshield. If the wiper element is not rolling over when the wiper direction reverses, align the wiper arm. The extension bar portion of the wiper arm must be twisted in the proper direction to allow the wiper element to roll over when the direction reverses.

(2) Place two small adjustable wrenches placed 50 mm (2 in.) apart on the wiper arm extension rod.

(3) Twist the extension rod slightly in the opposite direction that the element is laying on the windshield while holding the wrench closest to the pivot stationary.

(4) Repeat Step 1, and align as necessary until wiper stops chattering and wipes the windshield clear.

REMOVAL

CAUTION: The driver side wiper arm must be parked above the passenger side. Failure to do so will result in damage to the arms, blades or system.

(1) Lift the arm cap upward.

(2) Remove the nut holding wiper arm to the wiper pivot.

(3) Using a suitable two jaw puller, separate the wiper arm from the wiper pivot (Fig. 1).

INSTALLATION

(1) Verify that the wiper motor and linkage are in the park position.

(2) Place the wiper arm in position over the wiper pivot (Fig. 2).

(3) Install the nut to hold the wiper arm to the wiper pivot. Torque nut to 35 N·m (26 ft. lbs.).

CAUTION: It is important to torque the wiper arm nut properly to insure that the wiper arm head does not strip and damage the arm, blade, and pivot of both wiper arms.

(4) Push the arm cap cover down.

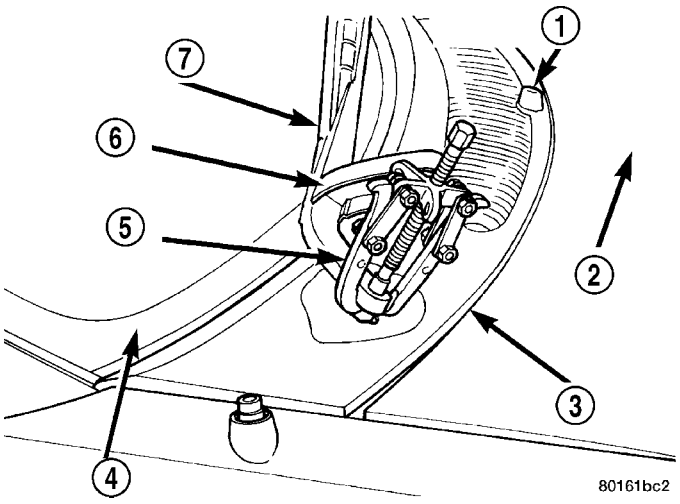

Fig. 1 WIPER ARM REMOVAL

1 - WASHER NOZZLE
2 - HOOD
3 - COWL COVER
4 - WINDSHIELD
5 - TWO JAW PULLER
6 - ARM CAP
7 - WINDSHIELD WIPER ARM

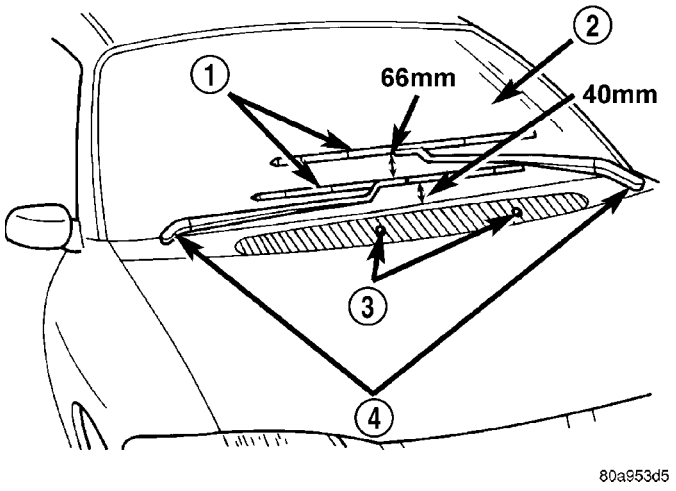

Fig. 2 WIPER ARM ADJUSTMENT

1 - WIPER BLADES
2 - WINDSHIELD
3 - WASHER NOZZLES
4 - WIPER ARMS

FRONT WIPER MOTOR

REMOVAL

(1) Remove the front wiper motor from vehicle (Refer to 8 - ELECTRICAL/WIPERS/WASHERS/WIPER MODULE - REMOVAL).

(2) Remove four backwall bolts and four brace nuts.

(3) Remove wiper linkage from wiper module.

(4) Disconnect wire connectors from back of wiper motor.

FRONT WIPER MOTOR (Continued)

(5) Remove wiper linkage from motor crank. DO NOT remove crank from motor.
(6) Remove bolts holding wiper motor and remove motor.

INSTALLATION

(1) Place wiper module on a suitable work surface.
(2) Install wiper linkage into wiper unit.
(3) Connect wire connectors to wiper motor.
(4) Place the wiper module into engine compartment and connect wiper module wire connector to engine wire harness (Fig. 7).
(5) Install the four backwall bolts and four brace nuts to wiper module.
(6) Operate wiper motor and verify that the wiper motor parks when wiper switch is turned OFF.

REAR WIPER ARM

REMOVAL

(1) Remove arm nut cap.
(2) Remove wiper arm nut.
(3) Pull wiper from pivot by rocking back and forth.

INSTALLATION

(1) Verify that wipers are in parked position.
(2) Position arm on pivot.
(3) Install wiper arm nut and torque to 20 N·m (175 in. lbs.).

REAR WIPER MOTOR

REMOVAL

(1) Disconnect and isolate the battery negative cable.
(2) Remove rear wiper arm. (Refer to 8 - ELECTRICAL/WIPERS/WASHERS/REAR WIPER ARM - REMOVAL) in this section.
(3) Open liftgate.
(4) Remove liftgate trim panel. (Refer to 23 - BODY/DECKLID/HATCH/LIFTGATE/TAILGATE/ TRIM PANEL - REMOVAL).
(5) Disconnect wire connector from rear wiper motor.
(6) Remove screws holding rear wiper motor to liftgate.
(7) Remove wiper motor from liftgate.

INSTALLATION

(1) Position the wiper motor in the liftgate.
(2) Install the retaining screws.
(3) Connect the wire harness connector.
(4) Install the liftgate trim panel. (Refer to 23 - BODY/DECKLID/HATCH/LIFTGATE/TAILGATE/ TRIM PANEL - INSTALLATION).
(5) Connect wire connector to rear wiper motor.
(6) Install the screws holding rear wiper motor to liftgate.
(7) Install the wiper motor to the liftgate.
(8) Close the liftgate.
(9) Install the wiper arm. (Refer to 8 - ELECTRICAL/WIPERS/WASHERS/REAR WIPER ARM - INSTALLATION) in this section.
(10) Connect the battery negative cable.

REAR WIPER/WASHER SWITCH

DESCRIPTION

On Automatic Temperature Control (ATC) vehicles only, the rear window wiper/washer switches are located on the center bezel with the hazard and heated seat switches (Fig. 3). They are not serviceable separately from the hazard and heated seat switches. If defective, the entire switch assembly must be replaced.

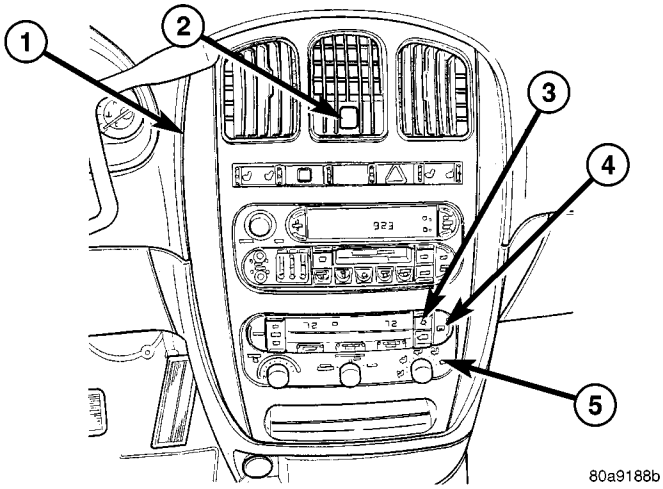

Fig. 3 INSTRUMENT PANEL CENTER BEZEL

1 - TRIM BEZEL
2 - IN CAR TEMPERATURE SENSOR
3 - A/C REQUEST SWITCH
4 - REAR WINDOW DEFOGGER/HEATED MIRRORS SWITCH COMBO
5 - FRONT WINDOW DEFROSTER MODE SELECTOR

On Manual Temperature Control (MTC) vehicles only, the rear window wiper/washer switch is located on the HVAC control head (Fig. 4) attached to the center bezel. They are not serviceable separately from the control head. If found faulty, the entire MTC head must be replaced.

REAR WIPER/WASHER SWITCH (Continued)

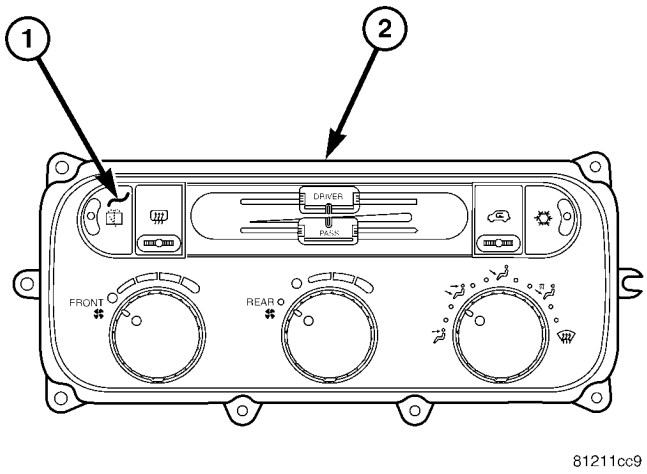

Fig. 4 REAR WIPER/WASHER SWITCH LOCATION

1 - REAR WIPER/WASHER SWITCH
2 - HVAC CONTROL UNIT

OPERATION

When rear wiper operation is required, the BCM will provide ignition ON voltage to the rear wiper motor. When the wiper switch is turned OFF, the BCM provides circuit ground to operate the motor until the wipe cycle is complete and the wiper arm returns to the base of the rear window.

The rear wiper/washer switch only offers an intermittent rear wiper mode. The wiper motor will cycle every 7 seconds. The intermittent delay time is also adjusted based upon vehicle speed. With the vehicle traveling greater than 50 mph, the cycle changes to every 5 seconds.

When rear washer is requested by depressing and holding down the switch, the BCM then provides a ground for the rear washer motor. Until the switch is released, the motor will be in a continuous wipe mode, then return to an intermittent wipe mode.

WASHER FLUID LEVEL SWITCH

REMOVAL

(1) Disconnect and isolate the battery negative cable.

(2) Hoist and support vehicle on hoist or jack stands.

(3) If necessary, remove the right front wheel and tire assembly (Refer to 22 - TIRES/WHEELS - REMOVAL).

(4) Disconnect the right front wheelhouse splash shield and move aside (Refer to 23 - BODY/EXTERIOR/WHEELHOUSE SPLASH SHIELD - REMOVAL).

(5) Drain washer fluid from the reservoir and into a suitable clean container. This can be done by disconnecting the windshield washer hose from the front (outboard) washer pump port allowing the washer fluid to drain into a container through a temporary jumper hose connected to the front washer pump.

(6) Disconnect the electrical body harness connector to the the fluid level sensor. Slide the red lock on the connector to the release position, then, depress the black tab and pull the connector off the sensor.

(7) Remove the sensor from reservoir by using a side foot to gently pry the sensor from the body of the reservoir. Do not damage the reservoir/sensor sealing surface or puncture reservoir during removal.

CAUTION: To avoid damage to the sensor, assure the reservoir is in an upright position before removing the sensor from the reservoir. Do not rotate the sensor during removal.

INSTALLATION

(1) Use a new grommet when installing a new sensor assembly.

(2) Assure that the flat of the sensor is aligned under the ridge of the reservoir and that the sensor connector is facing down in the fully seated position. This will allow for proper operation of the sensor float switch.

(3) Connect the electrical body harness connectors to the fluid level sensor. Slide the red lock on the connector to the closed or locked position.

(4) Assure that washer hose is properly routed to prevent pinching and possible inoperative washers.

(5) Connect the left right front wheelhouse splash shield and move aside (Refer to 23 - BODY/EXTERIOR/WHEELHOUSE SPLASH SHIELD - INSTALLATION).

(6) Install the right front wheel and tire assembly (Refer to 22 - TIRES/WHEELS - INSTALLATION).

(7) lower vehicle from hoist or jack stands.

(8) Connect the battery negative cable.

(9) Verify system operation.

WASHER HOSES

REMOVAL

(1) Remove washer reservoir from vehicle (Refer to 8 - ELECTRICAL/WIPERS/WASHERS/WASHER RESERVOIR - REMOVAL).

(2) Disconnect washer hose front the reservoir cavity.

(3) Disconnect the washer hose from the reservoir pump.

(4) Remove parts as necessary to replace washer hose (engine compartment, interior components, etc.).

WASHER HOSES (Continued)

INSTALLATION

(1) Install parts as necessary to after replacing washer hose (engine compartment, interior components, etc.).

(2) Connect the washer hose to the reservoir pump.

(3) Connect washer hose to the reservoir cavity.

(4) Install the washer reservoir into vehicle (Refer to 8 - ELECTRICAL/WIPERS/WASHERS/WASHER RESERVOIR - INSTALLATION).

WASHER PUMP MOTOR

REMOVAL

(1) Disconnect and isolate the battery negative cable.

(2) Hoist and support vehicle on hoist or jack stands.

(3) If necessary, remove the right front wheel and tire assembly (Refer to 22 - TIRES/WHEELS - REMOVAL).

(4) Disconnect the right front wheelhouse splash shield and move aside (Refer to 23 - BODY/EXTERIOR/WHEELHOUSE SPLASH SHIELD - REMOVAL).

(5) Drain washer fluid from the reservoir and into a suitable clean container. This can be done by disconnecting the windshield washer hose from the front (outboard) washer pump port and allowing the washer fluid to drain into a container through a temporary jumper hose connected to the front washer pump port.

(6) Disconnect the electrical body harness connectors to the washer pump motor. Slide the red lock on the connector to the release position, then, depress the black tab and pull the connector off the pump.

(7) Remove pump from reservoir by pulling pump upper retention tab away from reservoir cavity and then lifting pump up from mounting grommet. Do not damage reservoir/pump sealing surface or puncture reservoir during removal.

(8) Remove pump grommet and discard.

INSTALLATION

(1) Use new grommet when installing a new pump assembly.

(2) Assure pump upper retention tab is pressed into reservoir slot and that pump is rotated flat against the reservoir and that pump connector is facing up in the fully seated position. Assure the pump is aligned to and fully seated in the reservoir cavity.

(3) Connect the electrical body harness connectors to the washer pump motor. Slide the red lock on the connector to the closed or locked position.

(4) Assure that washer hose is properly routed to prevent pinching and possible inoperative washers.

(5) Connect the left right front wheelhouse splash shield and move aside (Refer to 23 - BODY/EXTERIOR/WHEELHOUSE SPLASH SHIELD - INSTALLATION).

(6) Install the right front wheel and tire assembly (Refer to 22 - TIRES/WHEELS - INSTALLATION).

(7) lower vehicle from hoist or jack stands.

(8) Connect the battery negative cable.

(9) Verify system operation.

WASHER RESERVOIR

REMOVAL

(1) Disconnect and isolate the battery negative cable.

(2) Remove the engine fresh air housing inside the engine compartment (Refer to 9 - ENGINE/AIR INTAKE SYSTEM/AIR CLEANER HOUSING - REMOVAL).

(3) Disconnect the washer hose at the in-line connector forward of the cowl grille so that the in-line connector remains with the washer hose from the fresh air plenum.

(4) Disconnect the washer hose from the hose clip located on the front fender side shield.

(5) Remove the filler tube screw.

(6) Hoist and support vehicle on hoist or jack stands.

(7) Remove the right front wheel and tire assembly (Refer to 22 - TIRES/WHEELS - REMOVAL).

(8) Disconnect the left right front wheelhouse splash shield and move aside (Refer to 23 - BODY/EXTERIOR/WHEELHOUSE SPLASH SHIELD - REMOVAL).

(9) Drain washer fluid from the reservoir and into a suitable clean container. This can be done by disconnecting the windshield washer hose from the front (outboard) washer pump port allowing the washer fluid to drain into a container through a temporary jumper hose connected to the washer pump port.

(10) Disconnect the electrical body harness connectors to the washer pump motor and the fluid level sensor. Slide the red lock on the connector to the release position, then, depress the black tab and pull the connector off the pump or sensor.

(11) Remove the two reservoir mounting screws.

(12) Disconnect the reservoir from the body mount by raising the reservoir upward slightly and then down so that the reservoir filler neck and front washer hose pull through the opening in the front fender side shield.

WASHER RESERVOIR (Continued)

INSTALLATION

(1) Push filler neck and front washer hose through the opening in the front fender side shield. Connect the reservoir to the body mount by lowering the reservoir down.

(2) Install the two reservoir mounting screws. Torque screws to 8.5 - 11.3 N·m (75 - 100 in. lbs.).

(3) Connect the electrical body harness connectors to the washer pump motor and the fluid level sensor. Slide the red lock on the connector to the closed or locked position.

(4) Assure that washer is properly routed to prevent pinching and possible inoperative washers.

(5) Install the left right front wheelhouse splash shield (Refer to 23 - BODY/EXTERIOR/WHEELHOUSE SPLASH SHIELD - INSTALLATION).

(6) Install the right front wheel and tire assembly (Refer to 22 - TIRES/WHEELS - INSTALLATION).

(7) lower vehicle from hoist or jack stands.

(8) Install the filler tube screw. Torque screw to 8.5 - 11.3 N·m (75 - 100 in. lbs.).

(9) Connect the washer hose to the hose clip located on the front fender side shield.

(10) Connect the washer hose at the in-line connector forward of the cowl grille.

(11) Install the engine fresh air housing inside the engine compartment (Refer to 9 - ENGINE/AIR INTAKE SYSTEM/AIR CLEANER HOUSING - INSTALLATION).

(12) Connect the battery negative cable.

(13) Verify system operation.

WIPER BLADES

REMOVAL

(1) Lift the wiper arm away from the glass.

(2) Disengage the release tab holding the wiper blade to the wiper arm and remove the wiper blade from the wiper arm (Fig. 5) and (Fig. 6).

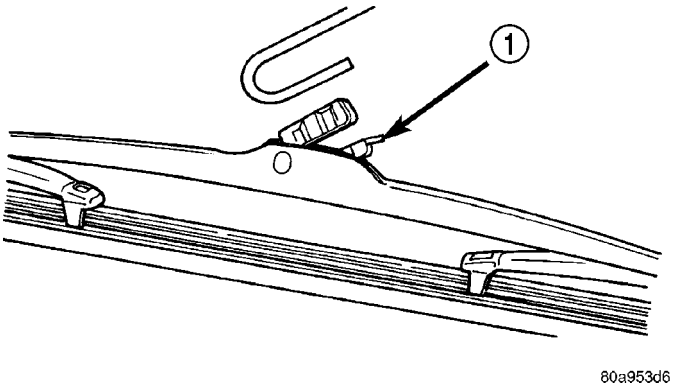

Fig. 5 WINDSHIELD WIPER BLADE

1 - RELEASE TAB

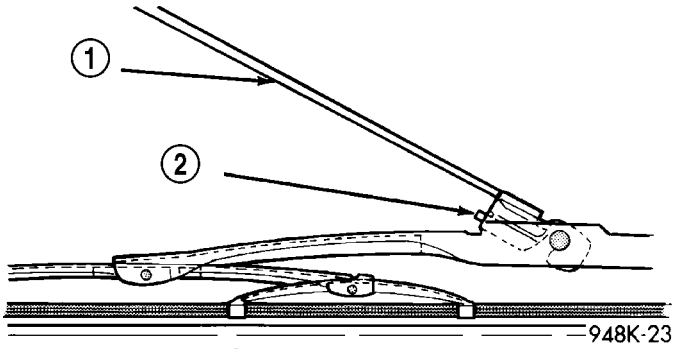

Fig. 6 REAR WIPER

1 - WIPER ARM
2 - BLADE LATCH

CLEANING

Wiper blades exposed to the weather for a long period of time tend to lose their wiping effectiveness. Periodic cleaning of the wiper blade is recommended to remove the accumulation of salt and road grime. The wiper blades, arms and windshield should be cleaned with a sponge or cloth and a mild detergent or nonabrasive cleaner. If the wiper blades continue to streak or smear, they should be replaced. The wiper blade should run smoothly across the windshield in both directions. The wiper blade should slightly roll over center when the blade reverses direction. A wiper blade insert that has lost flexibility or a wiper arm that has lost spring tension, will cause the blade to skip or chatter across the windshield. If the wiper blades are new and the wiper arm spring tension is OK and a chattering sound is emitted from the wiper(s), the wiper blade is not rolling over center. If this condition exists, (refer to 8 - ELECTRICAL/WIPERS/WASHERS/WIPER ARMS - ADJUSTMENTS).

INSTALLATION

(1) Position the blade onto the arm.

(2) Engage the blade to the retainer by pulling up on the blade until the tabs snap into position (Fig. 5).

WIPER LINKAGE

REMOVAL

(1) Remove the front windshield wiper unit from vehicle (Refer to 8 - ELECTRICAL/WIPERS/WASHERS/WIPER MODULE - REMOVAL).

(2) Place the wiper unit on a suitable work surface.

(3) Remove nuts holding the cowl cover brackets to the wiper unit.

(4) Remove cowl cover brackets from the wiper unit.

(5) Remove nuts holding linkage to the wiper unit.

(6) Remove the wiper linkage from the wiper unit.

WIPER LINKAGE (Continued)

(7) Disconnect the wire connectors from back of the wiper motor.

INSTALLATION

(1) Connect the wire harness connector.
(2) Install the linkage on the wiper unit.
(3) Install the nut holding the linkage to the wiper unit.
(4) Install the cowl cover brackets to the wiper nut.
(5) Install the front wiper unit (Refer to 8 - ELECTRICAL/WIPERS/WASHERS/WIPER MODULE - INSTALLATION).
(6) Install the cowl cover.
(7) Install the wiper arms and blades.

WIPER MODULE

REMOVAL

(1) Release the hood latch and open hood.
(2) Disconnect and isolate the battery negative cable.
(3) Remove the wiper arms.
(4) Remove the cowl cover (Refer to 23 - BODY/EXTERIOR/COWL GRILLE - REMOVAL).
(5) Disconnect the positive lock on the wiper module wire connector (Fig. 7).

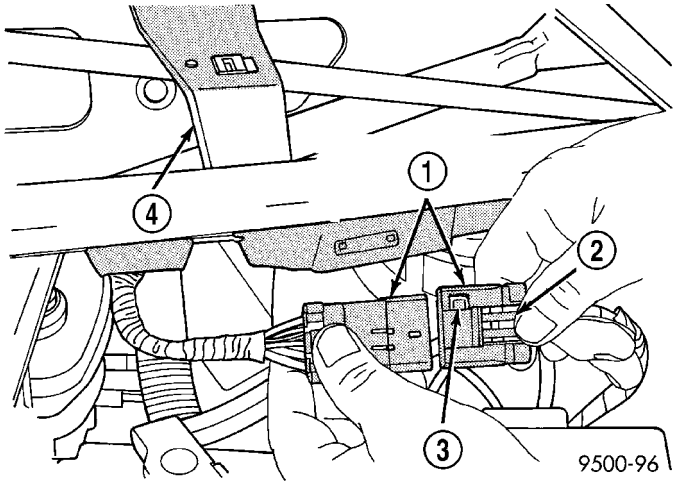

Fig. 7 WIPER MODULE WIRE CONNECTOR

1 - WIPER SYSTEM WIRE CONNECTOR
2 - LOCK TAB
3 - POSITIVE LOCK
4 - WIPER MODULE

(6) Disconnect the wiper module wire connector from the engine compartment wire harness.
(7) Disconnect the windshield washer hose from coupling outside the module.
(8) Disconnect the drain tubes from nipples on bottom of the wiper module.
(9) Remove nuts holding wiper module to lower windshield fence.
(10) Remove bolts holding the wiper module to the dash panel (Fig. 8).

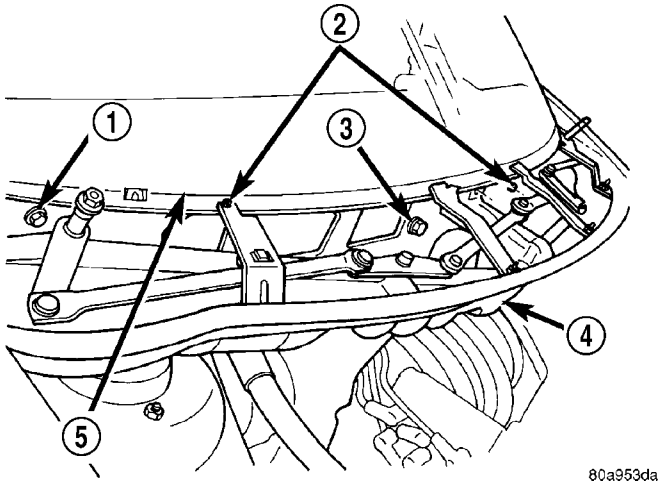

Fig. 8 WIPER MODULE

1 - BOLT
2 - NUTS
3 - BOLT
4 - WIPER MODULE
5 - WINDSHIELD

(11) Lift wiper module from weld-studs on lower windshield fence.

CAUTION: Do not allow wiper module to rest on brake master cylinder reservoir, damage to brake system can result.

(12) Remove wiper module.

INSTALLATION

(1) Position the wiper module into the cowl.
(2) Install the bolts that secure the wiper module to the dash (Fig. 8).
(3) Install the nuts that retain the wiper module.
(4) Connect the drain tubes to the nipples on the wiper module.
(5) Connect the windshield washer tube.
(6) Connect the wire harness connector to the wiper module (Fig. 8).
(7) Connect the positive lock on the wiper module wire connector (Fig. 7).

CAUTION: Do not allow wiper module to rest on brake master cylinder reservoir, damage to brake system can result.

(8) Install the cowl cover (Refer to 23 - BODY/EXTERIOR/COWL GRILLE - INSTALLATION).
(9) Install the wiper arms and blades.
(10) Connect the battery negative cable.
(11) Close the hood.

NAVIGATION/TELECOMMUNICATION

TABLE OF CONTENTS

page

NAVIGATION/TELECOMMUNICATION
DESCRIPTION 1
OPERATION 1
DIAGNOSIS AND TESTING
TELECOMMUNICATION 1

page

HANDS FREE MODULE
REMOVAL 3
INSTALLATION 3

NAVIGATION/ TELECOMMUNICATION

DESCRIPTION

TELECOMMUNICATIONS

A hands-free cellular system is an available option on this vehicle. It uses Bluetooth™ technology to provide wireless communication between the operator's compatible cellular telephone and the vehicle's on-board receiver.

The system uses voice recognition technology to control operation. The incoming voice is broadcast through the vehicle's radio speakers, automatically overriding any other audio signals on the speakers when the hands-free system is in use. A microphone in the rearview mirror picks up vehicle occupant's voices. If a call is in progress when the ignition is switched off, the hands-free system will continue to operate for up to 45 seconds as part of the Accessory Relay Delay function. Thereafter, the call can continue on the hand-held telephone.

The center console front storage compartment includes a cellular telephone holder, but the system will communicate with a telephone that is anywhere within the vehicle. However, covering the hand held phone or the hands-free phone module with a metal object may block the signal. The system will recognize up to seven telephones, each of which is given a spoken identification by the user during the setup process. The system includes Spanish voice recognition in addition to English.

Two buttons on the rearview mirror, identified with ISO icons, control the system: A ″phone″ button turns the system on and off; a ″voice recognition″ (or voice command) button prompts the hands-free system to listen for a voice command.

OPERATION

TELECOMMUNICATION

Two buttons on the rearview mirror, identified with ISO icons, control the system: A ″phone″ button turns the system on and off; a ″voice recognition″ (or voice command) button prompts the hands-free system to listen for a voice command. The system includes the following features:

- Phonebook - Stores telephone numbers for later recall by name or other verbal identification, called a voice tag, and memory location.
- Four memory locations - Home, Work, Mobile and Pager. A maximum of 32 unique names or voice tags may be stored at the same time, with a different number in each of the four memory locations.
- Voice tag dialing - Dials the number associated with a voice tag and memory location.
- Digit dialing - Dials the telephone number by recognizing the names of the digits as they are spoken.
- Receiving calls - A voice prompt notifies the user of an incoming call. Pressing the “phone” button answers the call.
- Privacy Mode - Switches the call to the hand-held telephone and the hands-free system and back again using the “voice recognition” (or “voice command”) button and a voice command, if desired.

DIAGNOSIS AND TESTING

TELECOMMUNICATION

Any diagnosis of the Telecommunication system should begin with the use of the DRB III® diagnostic tool. For information on the use of the DRB III®, refer to the appropriate Diagnostic Service Information.

For complete circuit diagrams, refer to the appropriate wiring information.

NAVIGATION/TELECOMMUNICATION (Continued)

WARNING: ON VEHICLES EQUIPPED WITH AIRBAGS, REFER TO ELECTRICAL, RESTRAINTS BEFORE ATTEMPTING ANY STEERING WHEEL, STEERING COLUMN, OR INSTRUMENT PANEL COMPONENT DIAGNOSIS OR SERVICE. FAILURE TO TAKE THE PROPER PRECAUTIONS COULD RESULT IN ACCIDENTAL AIRBAG DEPLOYMENT AND POSSIBLE PERSONAL INJURY.

TELECOMMUNICATION SYSTEM DIAGNOSIS

CONDITION	POSSIBLE CAUSE	CORRECTION
Phone Not Available	1. Bluetooth phone not paired to the system.	1. Ensure that phone(s) are paired to the system.
	2. Bluetooth phone not present or turned OFF.	2. Make sure paired phone is present, turned ON and that the Bluetooth option is enabled on the phone.
	3. Bluetooth phone has low battery.	3. At low battery levels, some phones will turn off Bluetooth functionality. Ensure cellular phone is charged to an adequate level.
Phone Pairing Failed	1. Phone does not support Hands Free Profile	1. The Telecommunication system requires the cellular phone to be Bluetooth™ enabled, as well as supporting the Hands Free Profile. The customer will have to upgrade their phone to one supporting Hands Free Profile. A list of suggested phones is available at: http://www.chrysler.com/uconnect.
	2. Phone not Bluetooth enabled.	2. The Telecommunication system requires the cellular phone to be Bluetooth™ enabled. A list of suggested phones is available at: http://www.chrysler.com/uconnect.
	3. PIN entered on the phone is not the same as PIN spoken to the system.	3. The PIN spoken to the system must be the same PIN entered into the phone.
	4. Phone has reached maximum number of allowed devices paired.	4. Remove one of the previously paired devices from it's list.
Poor Voice Recognition	1. Microphone failure	1. Using a scan tool, check for microphone fault codes.
	2. Customer not waiting for the beep before speaking.	2. Ensure customer is waiting for the system ″beep″ prior to beginning the speech to be recognized.
	3. Customer not speaking in a smooth normal manner.	3. Verify that the customer is attempting to use the system with a smooth consistent voice. The system is designed to accept normal speech spoken at a normal tone, some people tend to speak to a computer loud and slow, which results in reduced performance.
	4. Rear view mirror not properly attached to mounting.	4. Mirror must be firmly mounted to the mounting location. Ensure that mirror is tightened to the specified torque.
	5. High levels of noise in vehicle compartment	5. System performance is increased when noise conditions in the vehicle are lowered. Ideal conditions include windows closed.
	6. Object interfering with microphone input	6. Verify that there is no object, hanging from the mirror, that could be obstructing the microphone.
	7. User not saying ″send″ after a pager dialing request	7. User must say ″send″ at the end of a Pager Dialing request.

NAVIGATION/TELECOMMUNICATION (Continued)

CONDITION	POSSIBLE CAUSE	CORRECTION
	8. Other passengers talking while customer is attempting to use the system	8. Although designed for primary use by the driver, the microphone will pick up passengers in any seat of the vehicle. System performance is increased in low noise environments.
Phonebook names not recognized consistently	1. Phonebook names recorded in high noise conditions	1. For increased system performance, it is recommended that the phone book entries are recorded in a low noise environment. That is, vehicle in park, with windows up.
	2. Phonebook name(s) short	2. For increased performance it is recommended that the user use both first and last name as a phonebook entry. Example ″ Daniel James″ as opposed to ″Dan″.
	3. Phonebook names recorded by another user	3. It is recommended that each user of the system record their own phonebook entries. This will increase the recognition performance.
	4. Similar names in phonebook	4. For increased system performance it is recommended that the user do not enter similar sounding names in the phonebook.
	5. Object interfering with microphone input	5. Object interfering with microphone input.
Poor Phone audio quality.	1. Microphone failure	1. Use a scan tool, and check for Microphone faults.
	2. Rear view mirror not properly fixed to mounting button	2. Mirror must be firmly mounted to the mounting location. Tighten mirror to the specified torque.
	3. System being used in high noise conditions	3. System performance is increased when noise conditions in the vehicle are lowered. Ideal conditions include windows closed.
No Phone Audio	1. Phone setting cause phone audio to be routed to handset.	1. Route audio to ″Hands free″ device.

HANDS FREE MODULE

REMOVAL

(1) Disconnect and isolate the battery negative cable.

(2) Remove the instrument panel lower console (Refer to 23 - BODY/INSTRUMENT PANEL/STORAGE BIN - REMOVAL).

(3) Remove the mounting fasteners (Fig. 1).

(4) Disconnect the electrical harness connector and remove module.

INSTALLATION

(1) Connect electrical harness connector and position module.

(2) Install mounting fasteners.

(3) Install instrument panel lower console (Refer to 23 - BODY/INSTRUMENT PANEL/STORAGE BIN - INSTALLATION).

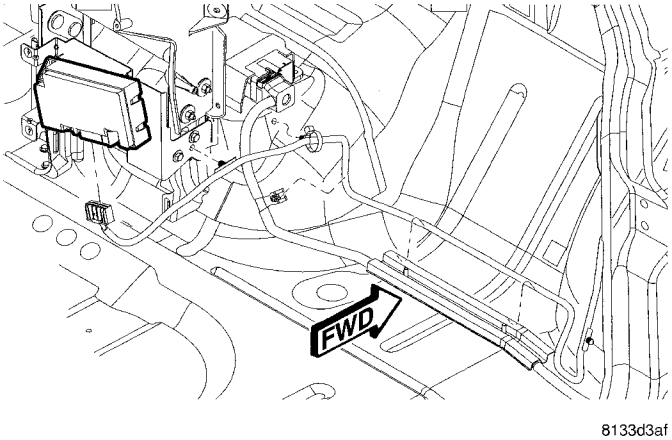

Fig. 1 HANDS FREE MODULE

(4) Connect battery negative cable.

WIRING

TABLE OF CONTENTS

	page		page
WIRING DIAGRAM INFORMATION	8W-01-1	REAR WINDOW DEFOGGER	8W-48-1
COMPONENT INDEX	8W-02-1	OVERHEAD CONSOLE	8W-49-1
POWER DISTRIBUTION	8W-10-1	FRONT LIGHTING	8W-50-1
GROUND DISTRIBUTION	8W-15-1	REAR LIGHTING	8W-51-1
BUS COMMUNICATIONS	8W-18-1	TURN SIGNALS	8W-52-1
CHARGING SYSTEM	8W-20-1	WIPERS	8W-53-1
STARTING SYSTEM	8W-21-1	TRAILER TOW	8W-54-1
FUEL/IGNITION SYSTEM	8W-30-1	NAVIGATION/TELECOMMUNICATIONS	8W-55-1
TRANSMISSION CONTROL SYSTEM	8W-31-1	CONVENIENCE SYSTEMS	8W-56-1
VEHICLE SPEED CONTROL	8W-33-1	POWER WINDOWS	8W-60-1
ANTILOCK BRAKES	8W-35-1	POWER DOOR LOCKS	8W-61-1
VEHICLE THEFT SECURITY SYSTEM	8W-39-1	POWER MIRRORS	8W-62-1
INSTRUMENT CLUSTER	8W-40-1	POWER SEATS	8W-63-1
HORN/CIGAR LIGHTER/POWER OUTLET	8W-41-1	POWER SUNROOF	8W-64-1
AIR CONDITIONING-HEATER	8W-42-1	SPLICE INFORMATION	8W-70-1
OCCUPANT RESTRAINT SYSTEM	8W-43-1	CONNECTOR PIN-OUTS	8W-80-1
INTERIOR LIGHTING	8W-44-1	CONNECTOR/GROUND/SPLICE LOCATION	8W-91-1
BODY CONTROL MODULE	8W-45-1	POWER DISTRIBUTION SYSTEM	8W-97-1
MESSAGE CENTER	8W-46-1		
AUDIO SYSTEM	8W-47-1		

8W-01 WIRING DIAGRAM INFORMATION

TABLE OF CONTENTS

page

WIRING DIAGRAM INFORMATION
DESCRIPTION
DESCRIPTION - HOW TO USE WIRING DIAGRAMS 1
DESCRIPTION - CIRCUIT INFORMATION 5
DESCRIPTION - CIRCUIT FUNCTIONS 6
DESCRIPTION - SECTION IDENTIFICATION AND INFORMATION 6
DESCRIPTION - CONNECTOR, GROUND AND SPLICE INFORMATION 7
WARNING
WARNINGS - GENERAL 7
DIAGNOSIS AND TESTING - WIRING HARNESS 7
STANDARD PROCEDURE
STANDARD PROCEDURE - ELECTROSTATIC DISCHARGE (ESD) SENSITIVE DEVICES 8
STANDARD PROCEDURE - TESTING OF VOLTAGE POTENTIAL 9
STANDARD PROCEDURE - TESTING FOR CONTINUITY 9

page

STANDARD PROCEDURE - TESTING FOR A SHORT TO GROUND 9
STANDARD PROCEDURE - TESTING FOR A SHORT TO GROUND ON FUSES POWERING SEVERAL LOADS 10
STANDARD PROCEDURE - TESTING FOR A VOLTAGE DROP 10
SPECIAL TOOLS
WIRING/TERMINAL 10
CONNECTOR
REMOVAL 11
INSTALLATION 11
DIODE
REMOVAL 14
INSTALLATION 14
TERMINAL
REMOVAL 14
INSTALLATION 14
WIRE
STANDARD PROCEDURE - WIRE SPLICING . . 15

WIRING DIAGRAM INFORMATION

DESCRIPTION

DESCRIPTION - HOW TO USE WIRING DIAGRAMS

DaimlerChrysler Corporation wiring diagrams are designed to provide information regarding the vehicles wiring content. In order to effectively use the wiring diagrams to diagnose and repair DaimlerChrysler Corporation vehicles, it is important to understand all of their features and characteristics.

Diagrams are arranged such that the power (B+) side of the circuit is placed near the top of the page, and the ground (B-) side of the circuit is placed near the bottom of the page (Fig. 1).

All switches, components, and modules are shown in the at rest position with the doors closed and the key removed from the ignition (Fig. 2).

Components are shown two ways. A solid line around a component indicates that the component is complete. A dashed line around the component indicates that the component is being shown is not complete. Incomplete components have a reference number to indicate the page where the component is shown complete.

It is important to realize that no attempt is made on the diagrams to represent components and wiring as they appear on the vehicle. For example, a short piece of wire is treated the same as a long one. In addition, switches and other components are shown as simply as possible, with regard to function only.

SYMBOLS

International symbols are used throughout the wiring diagrams. These symbols are consistent with those being used around the world (Fig. 3).

WIRING DIAGRAM INFORMATION (Continued)

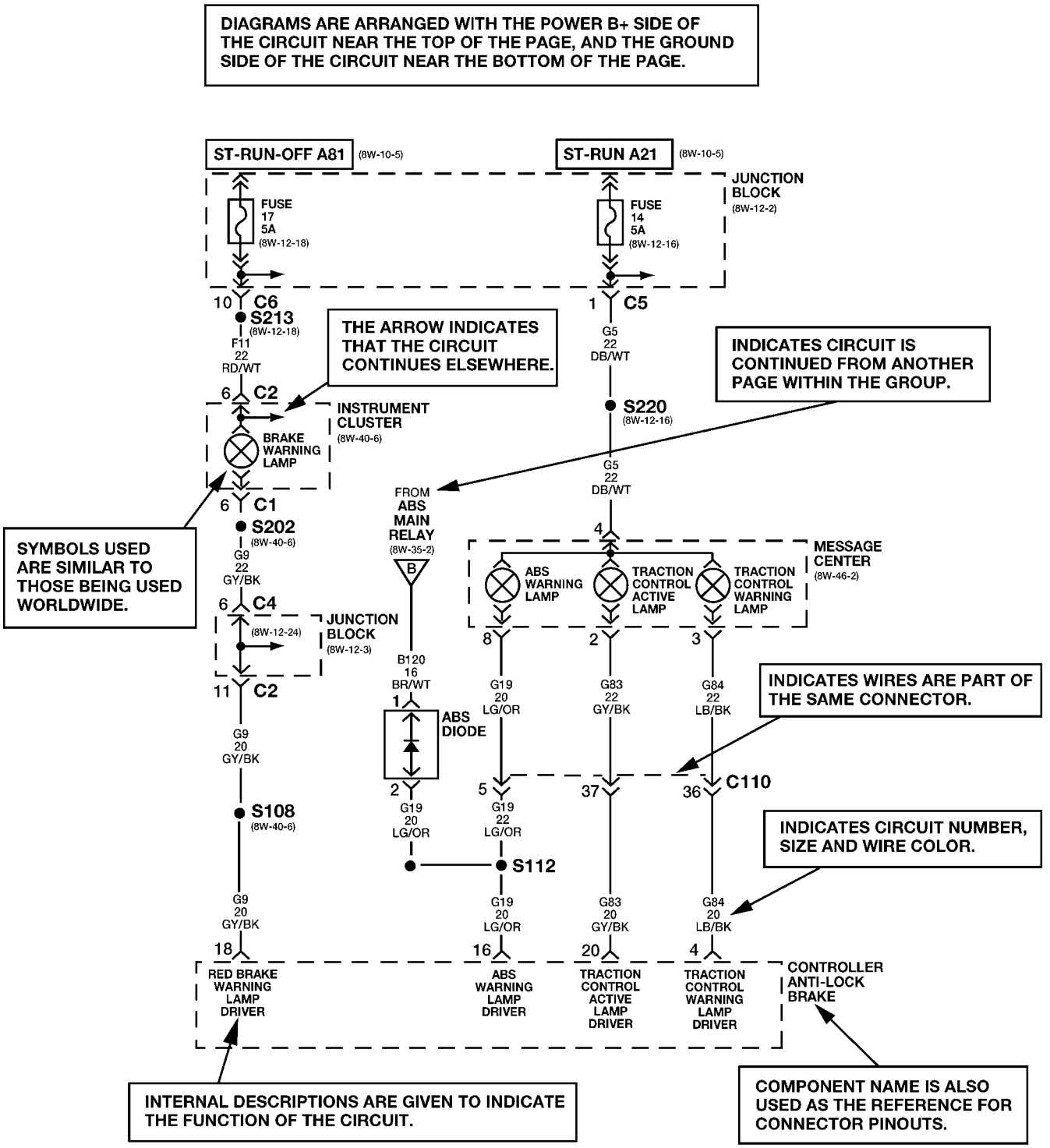

The System shown here is an EXAMPLE ONLY. It does not represent the actual circuit shown in the WIRING DIAGRAM SECTION.

80c06a01

Fig. 1 WIRING DIAGRAM EXAMPLE 1

WIRING DIAGRAM INFORMATION (Continued)

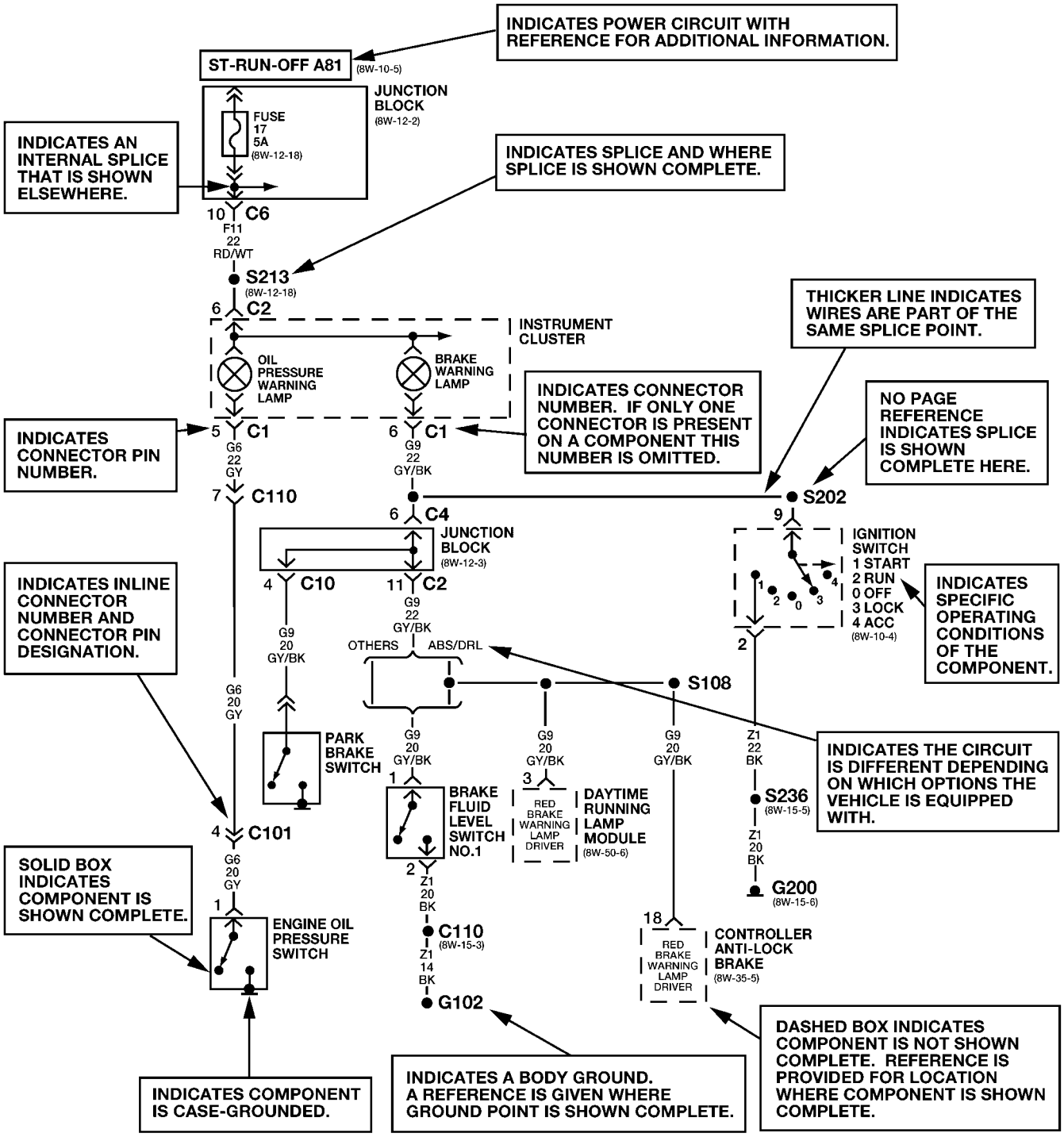

The System shown here is an EXAMPLE ONLY. It does not represent the actual circuit shown in the WIRING DIAGRAM SECTION.

80c06d02

Fig. 2 WIRING DIAGRAM EXAMPLE 2

WIRING DIAGRAM INFORMATION (Continued)

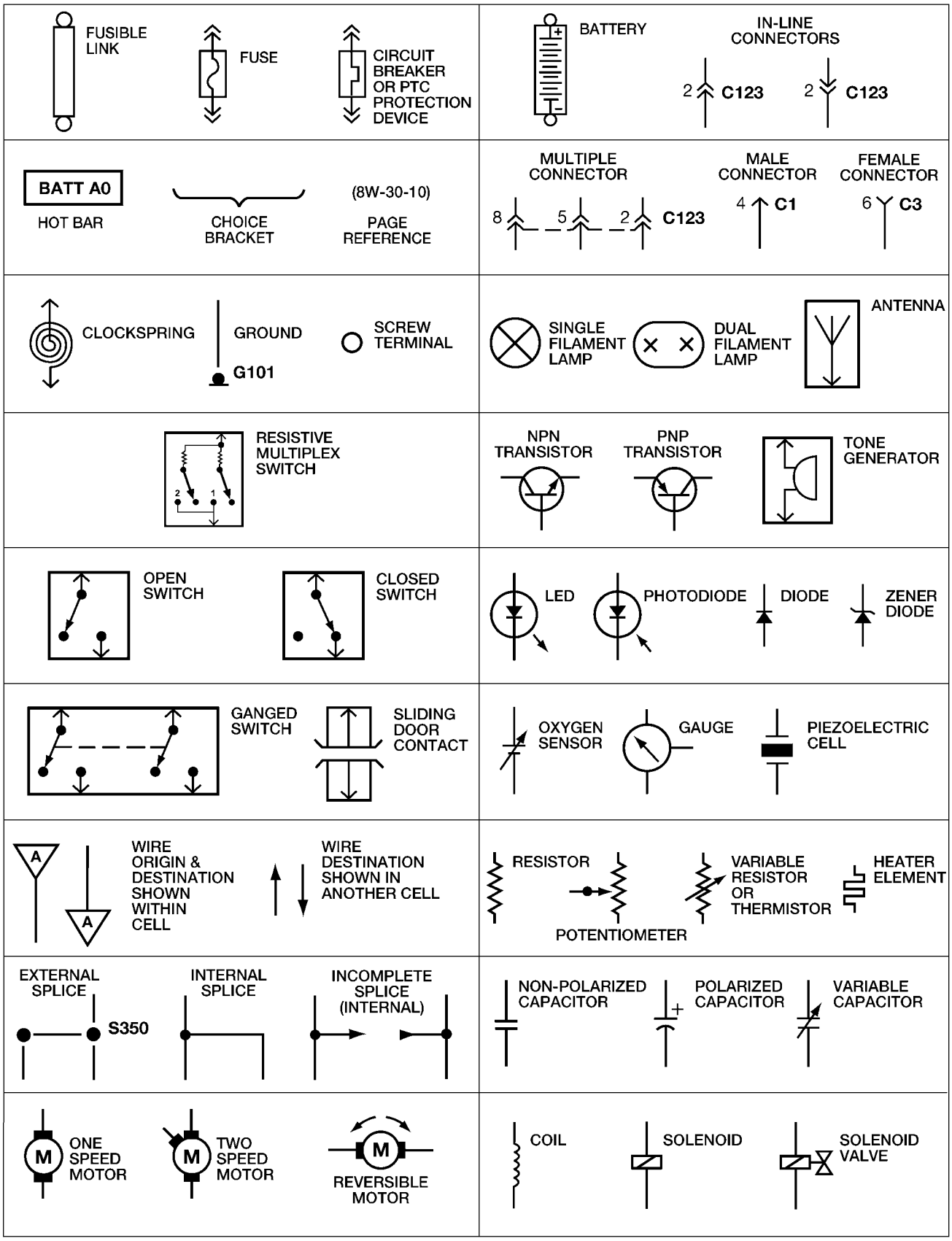

Fig. 3 WIRING DIAGRAM SYMBOLS

WIRING DIAGRAM INFORMATION (Continued)

TERMINOLOGY

This is a list of terms and definitions used in the wiring diagrams.

LHD . . . . . Left Hand Drive Vehicles
RHD . . . . . Right Hand Drive Vehicles
ATX . . Automatic Transmissions-Front Wheel Drive
MTX . . . Manual Transmissions-Front Wheel Drive
AT . . . . Automatic Transmissions-Rear Wheel Drive
MT . . . . . Manual Transmissions-Rear Wheel Drive
SOHC . . . . . Single Over Head Cam Engine
DOHC . . . . . Double Over Head Cam Engine
Export . . Vehicles Built For Sale In Markets Other Than North America
Except Export . . . . Vehicles Built For Sale In North America

DESCRIPTION - CIRCUIT INFORMATION

Each wire shown in the diagrams contains a code which identifies the main circuit, part of the main circuit, gage of wire, and color (Fig. 4).

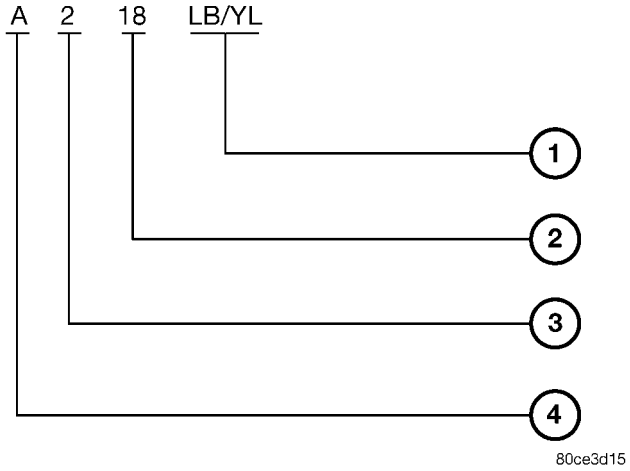

Fig. 4 WIRE CODE IDENTIFICATION

1 - COLOR OF WIRE (LIGHT BLUE WITH YELLOW TRACER
2 - GAGE OF WIRE (18 GAGE)
3 - PART OF MAIN CIRCUIT (VARIES DEPENDING ON EQUIPMENT)
4 - MAIN CIRCUIT IDENTIFICATION

WIRE COLOR CODE CHART

COLOR CODE	COLOR
BL	BLUE
BK	BLACK
BR	BROWN
DB	DARK BLUE
DG	DARK GREEN
GY	GRAY
LB	LIGHT BLUE
LG	LIGHT GREEN
OR	ORANGE
PK	PINK
RD	RED
TN	TAN
VT	VIOLET
WT	WHITE
YL	YELLOW
*	WITH TRACER

WIRING DIAGRAM INFORMATION (Continued)

DESCRIPTION - CIRCUIT FUNCTIONS

All circuits in the diagrams use an alpha/numeric code to identify the wire and it's function. To identify which circuit code applies to a system, refer to the Circuit Identification Code Chart. This chart shows the main circuits only and does not show the secondary codes that may apply to some models.

CIRCUIT IDENTIFICATION CODE CHART

CIRCUIT	FUNCTION
A	BATTERY FEED
B	BRAKE CONTROLS
C	CLIMATE CONTROLS
D	DIAGNOSTIC CIRCUITS
E	DIMMING ILLUMINATION CIRCUITS
F	FUSED CIRCUITS
G	MONITORING CIRCUITS (GAUGES)
H	MULTIPLE
I	NOT USED
J	OPEN
K	POWERTRAIN CONTROL MODULE
L	EXTERIOR LIGHTING
M	INTERIOR LIGHTING
N	MULTIPLE
O	NOT USED
P	POWER OPTION (BATTERY FEED)
Q	POWER OPTIONS (IGNITION FEED)
R	PASSIVE RESTRAINT
S	SUSPENSION/STEERING
T	TRANSMISSION/TRANSAXLE/ TRANSFER CASE
U	OPEN
V	SPEED CONTROL, WIPER/ WASHER
W	WIPERS
X	AUDIO SYSTEMS
Y	TEMPORARY
Z	GROUNDS

DESCRIPTION - SECTION IDENTIFICATION AND INFORMATION

The wiring diagrams are grouped into individual sections. If a component is most likely found in a particular group, it will be shown complete (all wires, connectors, and pins) within that group. For example, the Auto Shutdown Relay is most likely to be found in Group 30, so it is shown there complete. It can, however, be shown partially in another group if it contains some associated wiring.

Splice diagrams in Section 8W-70 show the entire splice and provide references to other sections the splices serves. Section 8W-70 only contains splice diagrams that are not shown in their entirety somewhere else in the wiring diagrams.

Section 8W-80 shows each connector and the circuits involved with that connector. The connectors are identified using the name/number on the diagram pages.

WIRING SECTION CHART

GROUP	TOPIC
8W-01 thru 8W-09	General information and Diagram Overview
8W-10 thru 8W-19	Main Sources of Power and Vehicle Grounding
8W-20 thru 8W-29	Starting and Charging
8W-30 thru 8W-39	Powertrain/Drivetrain Systems
8W-40 thru 8W-49	Body Electrical items and A/C
8W-50 thru 8W-59	Exterior Lighting, Wipers and Trailer Tow
8W-60 thru 8W-69	Power Accessories
8W-70	Splice Information
8W-80	Connector Pin Outs
8W-91	Connector, Ground and Splice Locations

WIRING DIAGRAM INFORMATION (Continued)

DESCRIPTION - CONNECTOR, GROUND AND SPLICE INFORMATION

CAUTION: Not all connectors are serviced. Some connectors are serviced only with a harness. A typical example might be the Supplemental Restraint System connectors. Always check parts availability before attempting a repair.

IDENTIFICATION

In-line connectors are identified by a number, as follows:

- In-line connectors located in the engine compartment are C100 series numbers
- In-line connectors located in the Instrument Panel area are C200 series numbers.
- In-line connectors located in the body are C300 series numbers.
- Jumper harness connectors are C400 series numbers.
- Grounds and ground connectors are identified with a "G" and follow the same series numbering as the in-line connectors.
- Splices are identified with an "S" and follow the same series numbering as the in-line connectors.
- Component connectors are identified by the component name instead of a number. Multiple connectors on a component use a C1, C2, etc. identifier.

LOCATIONS

Section 8W-91 contains connector/ground/splice location illustrations. The illustrations contain the connector name (or number)/ground number/splice number and component identification. Connector/ground/splice location charts in section 8W-91 reference the figure numbers of the illustrations.

The abbreviation T/O is used in the component location section to indicate a point in which the wiring harness branches out to a component. The abbreviation N/S means Not Shown in the illustrations

WARNING

WARNINGS - GENERAL

WARNINGS provide information to prevent personal injury and vehicle damage. Below is a list of general warnings that should be followed any time a vehicle is being serviced.

WARNING: ALWAYS WEAR SAFETY GLASSES FOR EYE PROTECTION.

WARNING: USE SAFETY STANDS ANYTIME A PROCEDURE REQUIRES BEING UNDER A VEHICLE.

WARNING: BE SURE THAT THE IGNITION SWITCH ALWAYS IS IN THE OFF POSITION, UNLESS THE PROCEDURE REQUIRES IT TO BE ON.

WARNING: SET THE PARKING BRAKE WHEN WORKING ON ANY VEHICLE. AN AUTOMATIC TRANSMISSION SHOULD BE IN PARK. A MANUAL TRANSMISSION SHOULD BE IN NEUTRAL.

WARNING: OPERATE THE ENGINE ONLY IN A WELL-VENTILATED AREA.

WARNING: KEEP AWAY FROM MOVING PARTS WHEN THE ENGINE IS RUNNING, ESPECIALLY THE FAN AND BELTS.

WARNING: TO PREVENT SERIOUS BURNS, AVOID CONTACT WITH HOT PARTS SUCH AS THE RADIATOR, EXHAUST MANIFOLD(S), TAIL PIPE, CATALYTIC CONVERTER AND MUFFLER.

WARNING: DO NOT ALLOW FLAME OR SPARKS NEAR THE BATTERY. GASES ARE ALWAYS PRESENT IN AND AROUND THE BATTERY.

WARNING: ALWAYS REMOVE RINGS, WATCHES, LOOSE HANGING JEWELRY AND AVOID LOOSE CLOTHING.

DIAGNOSIS AND TESTING - WIRING HARNESS

TROUBLESHOOTING TOOLS

When diagnosing a problem in an electrical circuit there are several common tools necessary. These tools are listed and explained below.

- Jumper Wire - This is a test wire used to connect two points of a circuit. It can be used to bypass an open in a circuit.

WARNING: NEVER USE A JUMPER WIRE ACROSS A LOAD, SUCH AS A MOTOR, CONNECTED BETWEEN A BATTERY FEED AND GROUND.

- Voltmeter - Used to check for voltage on a circuit. Always connect the black lead to a known good ground and the red lead to the positive side of the circuit.

CAUTION: Most of the electrical components used in today's vehicles are Solid State. When checking voltages in these circuits, use a meter with a 10 - megohm or greater impedance rating.

WIRING DIAGRAM INFORMATION (Continued)

• Ohmmeter - Used to check the resistance between two points of a circuit. Low or no resistance in a circuit means good continuity.

CAUTION: Most of the electrical components used in today's vehicles are Solid State. When checking resistance in these circuits use a meter with a 10 - megohm or greater impedance rating. In addition, make sure the power is disconnected from the circuit. Circuits that are powered up by the vehicle's electrical system can cause damage to the equipment and provide false readings.

• Probing Tools - These tools are used for probing terminals in connectors (Fig. 5). Select the proper size tool from Special Tool Package 6807, and insert it into the terminal being tested. Use the other end of the tool to insert the meter probe.

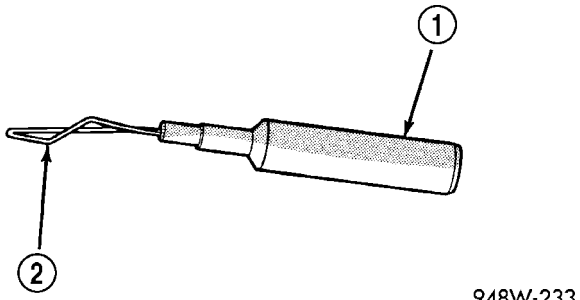

Fig. 5 PROBING TOOL

1 - SPECIAL TOOL 6801
2 - PROBING END

INTERMITTENT AND POOR CONNECTIONS

Most intermittent electrical problems are caused by faulty electrical connections or wiring. It is also possible for a sticking component or relay to cause a problem. Before condemning a component or wiring assembly, check the following items.

- Connectors are fully seated
- Spread terminals, or terminal push out
- Terminals in the wiring assembly are fully seated into the connector/component and locked into position
- Dirt or corrosion on the terminals. Any amount of corrosion or dirt could cause an intermittent problem
- Damaged connector/component casing exposing the item to dirt or moisture
- Wire insulation that has rubbed through causing a short to ground
- Some or all of the wiring strands broken inside of the insulation
- Wiring broken inside of the insulation

TROUBLESHOOTING WIRING PROBLEMS

When troubleshooting wiring problems there are six steps which can aid in the procedure. The steps are listed and explained below. Always check for non-factory items added to the vehicle before doing any diagnosis. If the vehicle is equipped with these items, disconnect them to verify these add-on items are not the cause of the problem.

(1) Verify the problem.

(2) Verify any related symptoms. Do this by performing operational checks on components that are in the same circuit. Refer to the wiring diagrams.

(3) Analyze the symptoms. Use the wiring diagrams to determine what the circuit is doing, where the problem most likely is occurring and where the diagnosis will continue.

(4) Isolate the problem area.

(5) Repair the problem area.

(6) Verify the proper operation. For this step, check for proper operation of all items on the repaired circuit. Refer to the wiring diagrams.

STANDARD PROCEDURE

STANDARD PROCEDURE - ELECTROSTATIC DISCHARGE (ESD) SENSITIVE DEVICES

All ESD sensitive components are solid state and a symbol (Fig. 6) is used to indicate this. When handling any component with this symbol, comply with the following procedures to reduce the possibility of electrostatic charge build up on the body and inadvertent discharge into the component. If it is not known whether the part is ESD sensitive, assume that it is.

(1) Always touch a known good ground before handling the part. This should be repeated while handling the part and more frequently after sliding across a seat, sitting down from a standing position, or walking a distance.

(2) Avoid touching electrical terminals of the part, unless instructed to do so by a written procedure.

(3) When using a voltmeter, be sure to connect the ground lead first.

(4) Do not remove the part form it's protective packing until it is time to install the part.

(5) Before removing the part from it's pakage, ground the pakage to a known good ground on the vehicle.

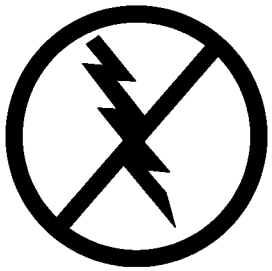

Fig. 6 ELECTROSTATIC DISCHARGE SYMBOL

WIRING DIAGRAM INFORMATION (Continued)

STANDARD PROCEDURE - TESTING OF VOLTAGE POTENTIAL

(1) Connect the ground lead of a voltmeter to a known good ground (Fig. 7).

(2) Connect the other lead of the voltmeter to the selected test point. The vehicle ignition may need to be turned ON to check voltage. Refer to the appropriate test procedure.

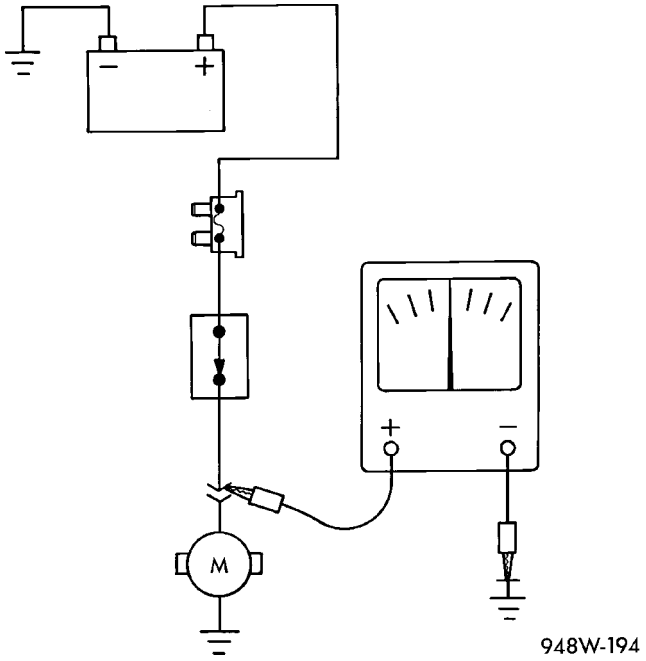

Fig. 7 TESTING FOR VOLTAGE POTENTIAL

STANDARD PROCEDURE - TESTING FOR CONTINUITY

(1) Remove the fuse for the circuit being checked or, disconnect the battery.

(2) Connect one lead of the ohmmeter to one side of the circuit being tested (Fig. 8).

(3) Connect the other lead to the other end of the circuit being tested. Low or no resistance means good continuity.

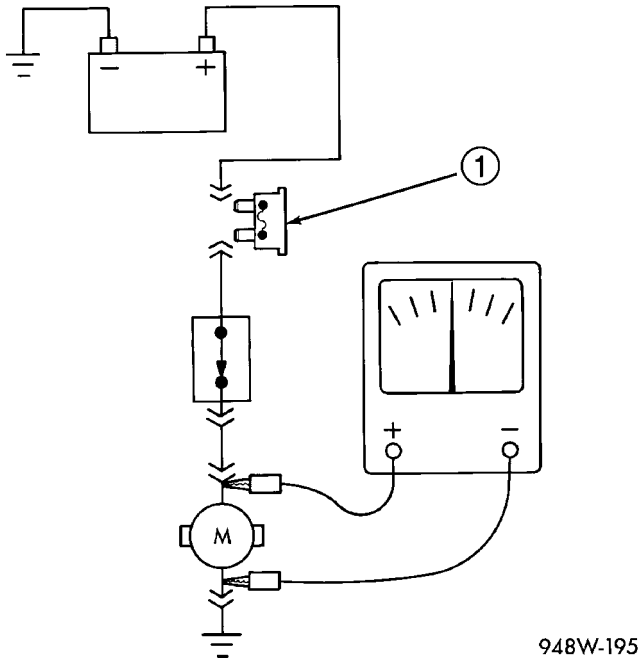

Fig. 8 TESTING FOR CONTINUITY

1 - FUSE REMOVED FROM CIRCUIT

STANDARD PROCEDURE - TESTING FOR A SHORT TO GROUND

(1) Remove the fuse and disconnect all items involved with the fuse.

(2) Connect a test light or a voltmeter across the terminals of the fuse.

(3) Starting at the fuse block, wiggle the wiring harness about six to eight inches apart and watch the voltmeter/test lamp.

(4) If the voltmeter registers voltage or the test lamp glows, there is a short to ground in that general area of the wiring harness.

WIRING DIAGRAM INFORMATION (Continued)

STANDARD PROCEDURE - TESTING FOR A SHORT TO GROUND ON FUSES POWERING SEVERAL LOADS

(1) Refer to the wiring diagrams and disconnect or isolate all items on the suspected fused circuits.
(2) Replace the blown fuse.
(3) Supply power to the fuse by turning ON the ignition switch or re-connecting the battery.
(4) Start connecting or energizing the items in the fuse circuit one at a time. When the fuse blows the circuit with the short to ground has been isolated.

STANDARD PROCEDURE - TESTING FOR A VOLTAGE DROP

(1) Connect the positive lead of the voltmeter to the side of the circuit closest to the battery (Fig. 9).
(2) Connect the other lead of the voltmeter to the other side of the switch, component or circuit.
(3) Operate the item.
(4) The voltmeter will show the difference in voltage between the two points.

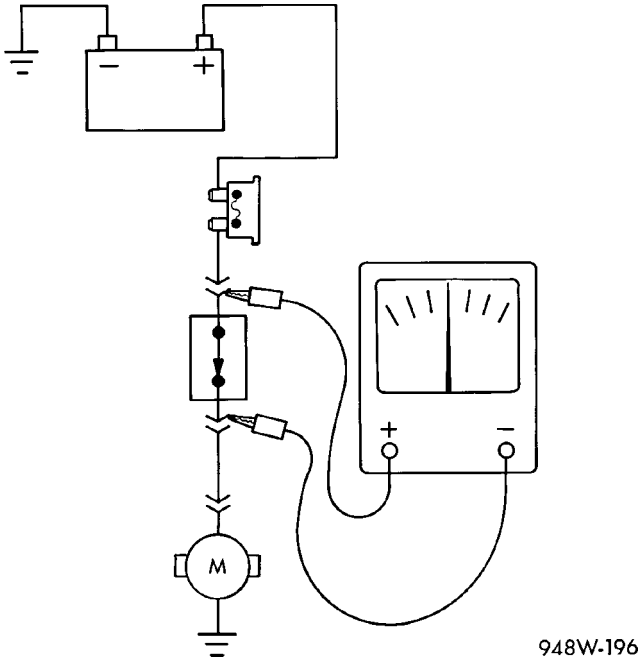

Fig. 9 TESTING FOR VOLTAGE DROP

SPECIAL TOOLS

WIRING/TERMINAL

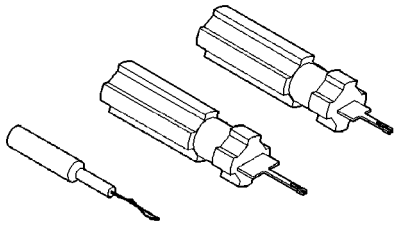

PROBING TOOL PACKAGE 6807

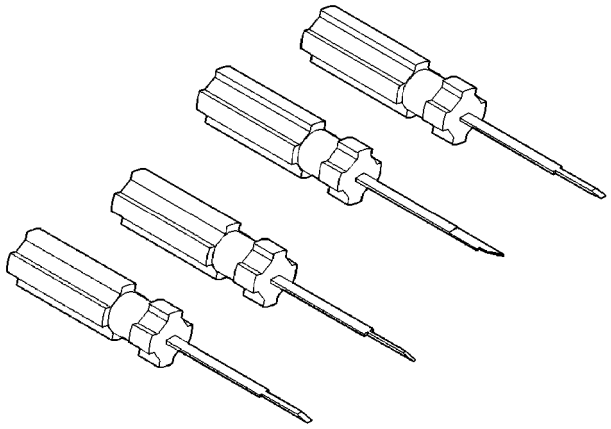

TERMINAL PICK TOOL SET 6680

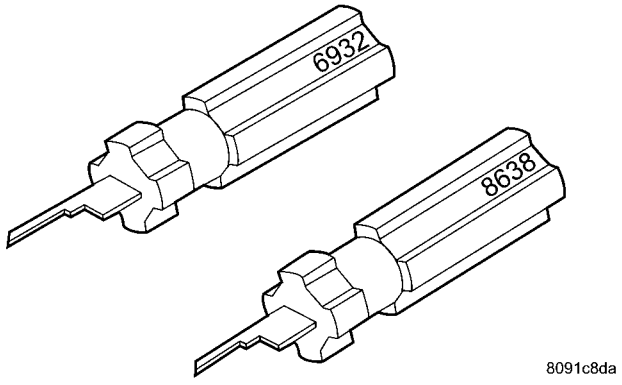

TERMINAL REMOVING TOOLS 6932 AND 8638

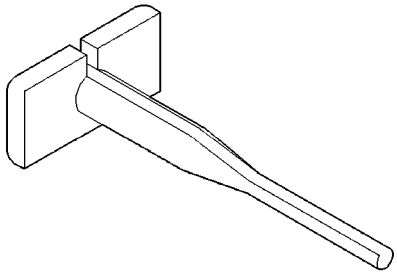

TERMINAL REMOVING TOOL 6934

CONNECTOR

REMOVAL

(1) Disconnect battery.
(2) Release Connector Lock (Fig. 10).
(3) Disconnect the connector being repaired from its mating half/component.
(4) Remove the dress cover (if applicable) (Fig. 10).

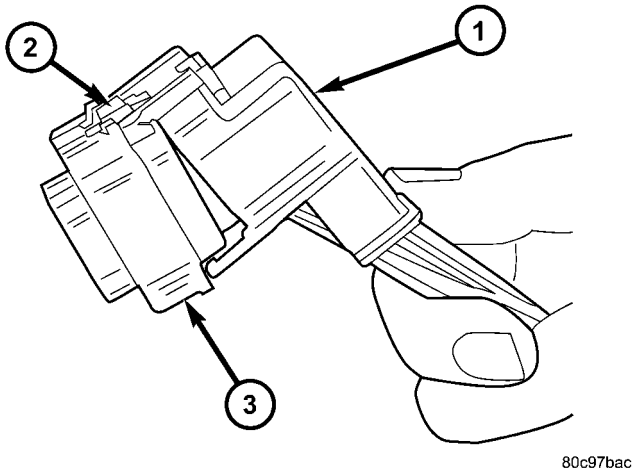

Fig. 10 REMOVAL OF DRESS COVER

1 - DRESS COVER
2 - CONNECTOR LOCK
3 - CONNECTOR

(5) Release the Secondary Terminal Lock, if required (Fig. 11).
(6) Position the connector locking finger away from the terminal using the proper special tool. Pull on the wire to remove the terminal from the connector (Fig. 12).

INSTALLATION

(1) Insert the removed terminal in the same cavity on the repair connector.
(2) Repeat steps for each terminal in the connector, being sure that all wires are inserted into the proper cavities. For additional connector pin-out identification, refer to the wiring diagrams.
(3) When the connector is re-assembled, the secondary terminal lock must be placed in the locked position to prevent terminal push out.
(4) Replace dress cover (if applicable).
(5) Connect connector to its mating half/component.
(6) Connect battery and test all affected systems.

CONNECTOR (Continued)

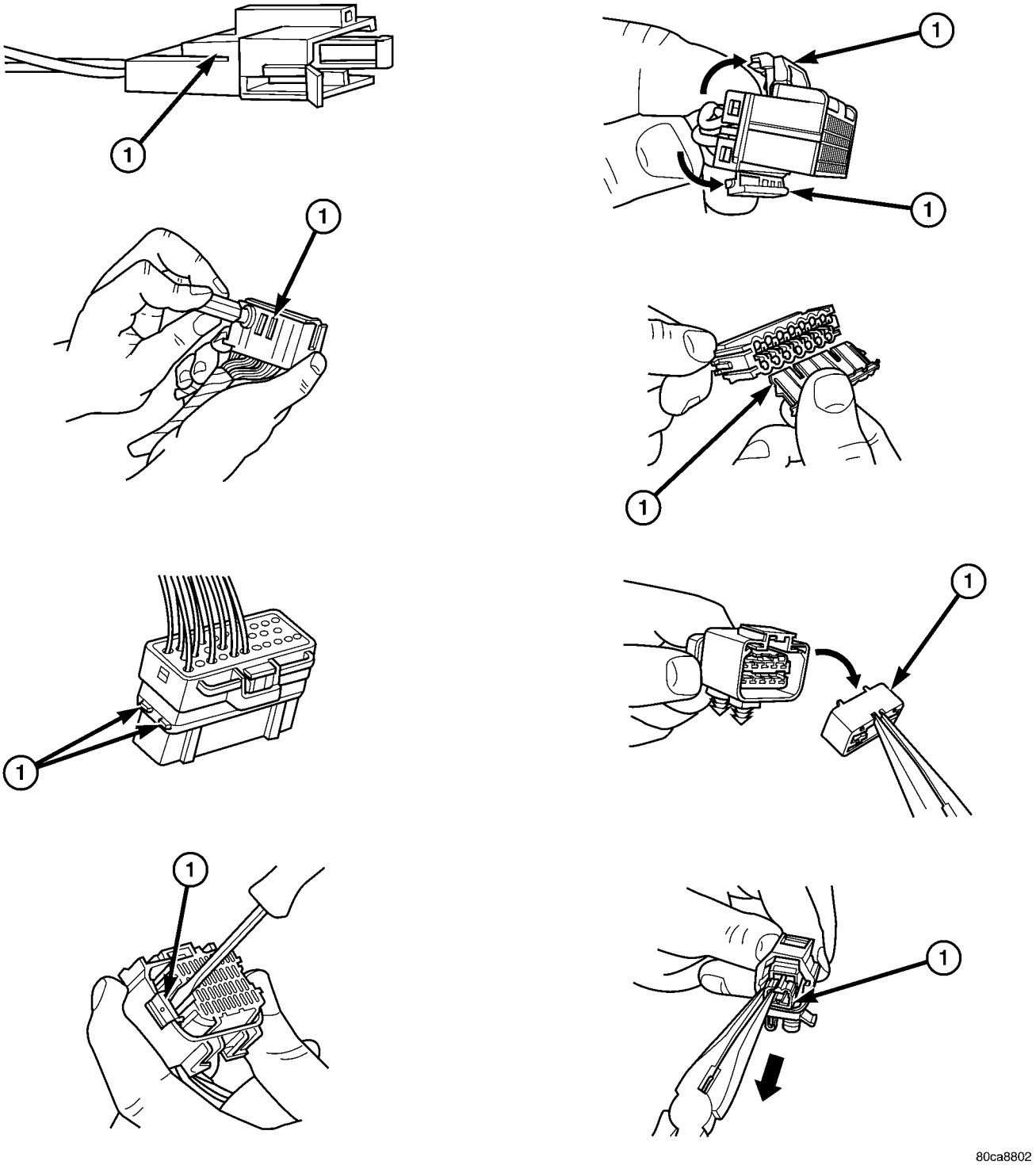

Fig. 11 EXAMPLES OF CONNECTOR SECONDARY TERMINAL LOCKS

1 - Secondary Terminal Lock

CONNECTOR (Continued)

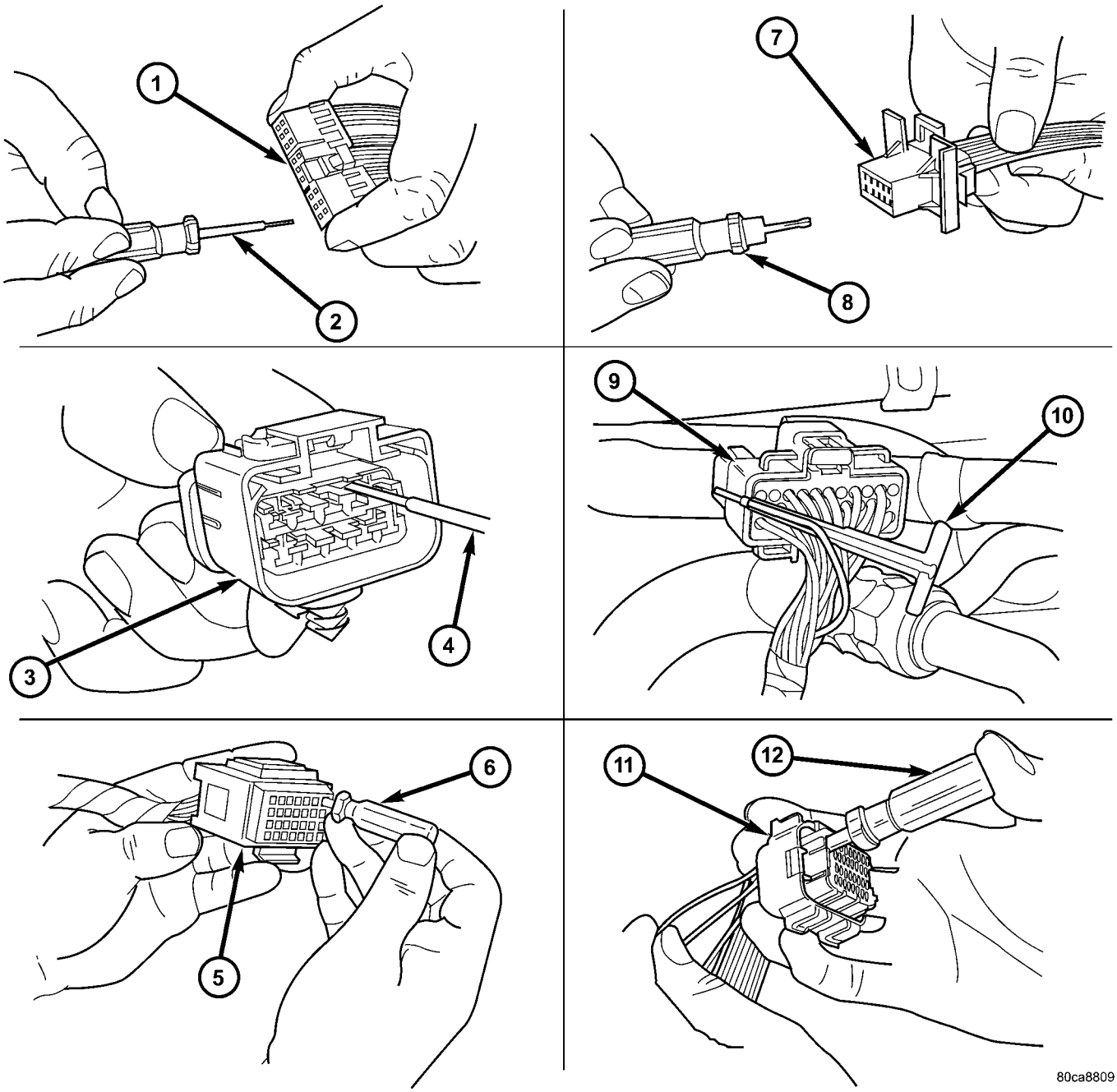

Fig. 12 TERMINAL REMOVAL

1 - TYPICAL CONNECTOR
2 - PICK FROM SPECIAL TOOL KIT 6680
3 - APEX CONNECTOR
4 - PICK FROM SPECIAL TOOL KIT 6680
5 - AUGAT CONNECTOR
6 - SPECIAL TOOL 6932
7 - MOLEX CONNECTOR
8 - SPECIAL TOOL 6742
9 - THOMAS AND BETTS CONNECTOR
10 - SPECIAL TOOL 6934
11 - TYCO CONNECTOR
12 - SPECIAL TOOL 8638

DIODE

REMOVAL

(1) Disconnect the battery.

(2) Locate the diode in the harness, and remove the protective covering.

(3) Remove the diode from the harness, pay attention to the current flow direction (Fig. 13).

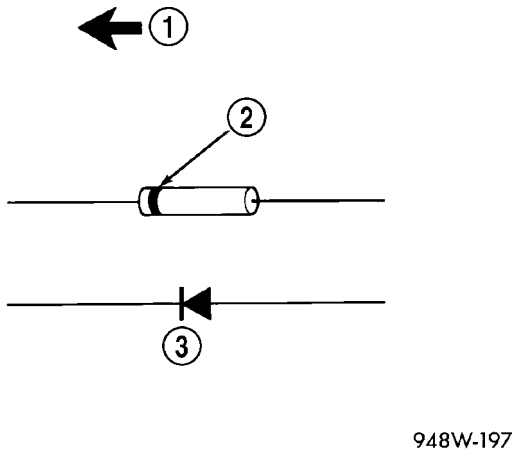

Fig. 13 DIODE IDENTIFICATION

1 - CURRENT FLOW
2 - BAND AROUND DIODE INDICATES CURRENT FLOW
3 - DIODE AS SHOWN IN THE DIAGRAMS

INSTALLATION

(1) Remove the insulation from the wires in the harness. Only remove enough insulation to solder in the new diode.

(2) Install the new diode in the harness, making sure current flow is correct. If necessary, refer to the appropriate wiring diagram for current flow (Fig. 13).

(3) Solder the connection together using rosin core type solder only. **Do not use acid core solder.**

(4) Tape the diode to the harness using electrical tape. Make sure the diode is completely sealed from the elements.

(5) Re-connect the battery and test affected systems.

TERMINAL

REMOVAL

(1) Follow steps for removing terminals described in the connector removal section.

(2) Cut the wire 6 inches from the back of the connector.

INSTALLATION

(1) Select a wire from the terminal repair kit that best matches the color and gage of the wire being repaired.

(2) Cut the repair wire to the proper length and remove one–half (1/2) inch of insulation.

(3) Splice the repair wire to the wire harness (see wire splicing procedure).

(4) Insert the repaired wire into the connector.

(5) Install the connector locking wedge, if required, and reconnect the connector to its mating half/component.

(6) Re-tape the wire harness starting at 1–1/2 inches behind the connector and 2 inches past the repair.

(7) Connect battery and test all affected systems.

WIRE

STANDARD PROCEDURE - WIRE SPLICING

When splicing a wire, it is important that the correct gage be used as shown in the wiring diagrams.

(1) Remove one-half (1/2) inch of insulation from each wire that needs to be spliced.

(2) Place a piece of adhesive lined heat shrink tubing on one side of the wire. Make sure the tubing will be long enough to cover and seal the entire repair area.

(3) Place the strands of wire overlapping each other inside of the splice clip (Fig. 14).

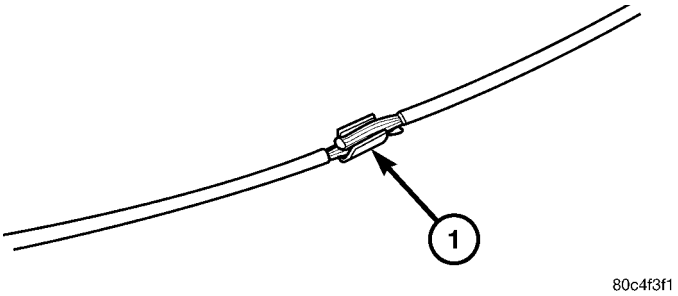

Fig. 14 SPLICE BAND

1 - SPLICE BAND

(4) Using crimping tool, Mopar p/n 05019912AA, crimp the splice clip and wires together (Fig. 15).

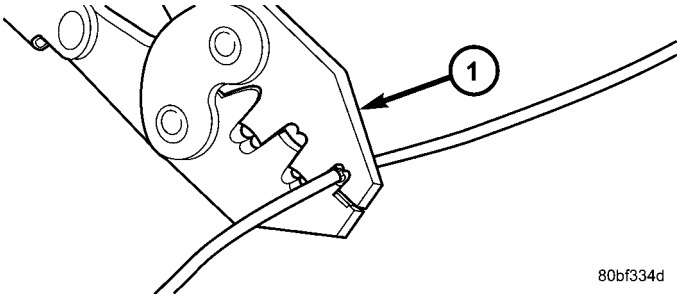

Fig. 15 CRIMPING TOOL

1 - CRIMPING TOOL

(5) Solder the connection together using rosin core type solder only (Fig. 16).

CAUTION: DO NOT USE ACID CORE SOLDER.

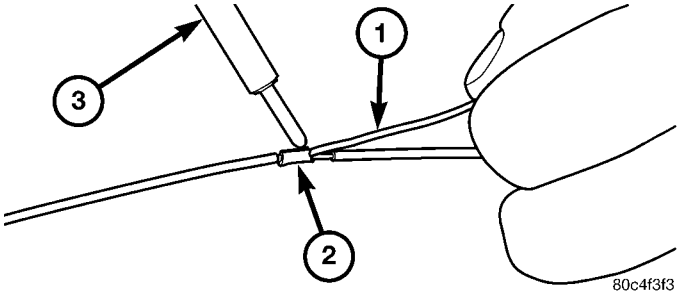

Fig. 16 SOLDER SPLICE

1 - SOLDER
2 - SPLICE BAND
3 - SOLDERING IRON

(6) Center the heat shrink tubing over the joint and heat using a heat gun. Heat the joint until the tubing is tightly sealed and sealant comes out of both ends of the tubing (Fig. 17).

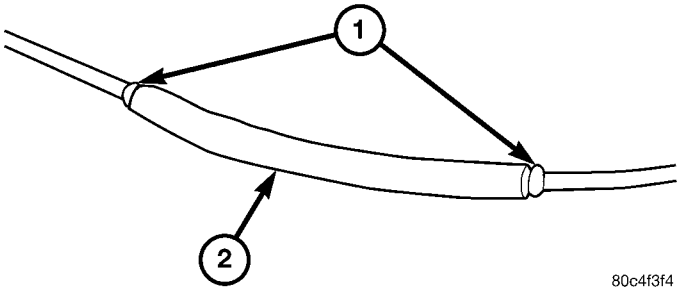

Fig. 17 HEAT SHRINK TUBE

1 - SEALANT
2 - HEAT SHRINK TUBE

8W-02 COMPONENT INDEX

Component	Page
A/C Compressor Clutch	8W-42
A/C Compressor Clutch Relay	8W-42
A/C Pressure Sensor	8W-42
A/C-Heater Control	8W-42
Accelerator Pedal Position Sensor	8W-30
Accessory Relay	8W-10
Adjustable Pedals Motor	8W-56
Adjustable Pedals Relay	8W-56
Adjustable Pedals Sensor	8W-56
Adjustable Pedals Switch	8W-56
Airbag	8W-43
Airbag On/Off Indicator Lamp	8W-43
Airbag Squibs	8W-43
Ambient Temperature Sensor	8W-49
Amplifier	8W-47
Antenna	8W-47
ATC Remote Sensor	8W-42
Auto Shut Down Relay	8W-30
Auto Temp Control	8W-42
B-Pillar Switches	8W-61
Back-Up Lamp Switch	8W-51
Battery	8W-20
Battery Temperature Sensor	8W-20
Belt Tension Sensor	8W-43
Blend Door Actuators	8W-42
Blower Motors	8W-42
Blower Motor Relays	8W-42
Blower Motor Resistor	8W-42
Body Control Module	8W-45
Boost Pressure Sensor	8W-30
Brake Fluid Level Switch	8W-35
Brake Lamp Switch	8W-30, 51
Brake Transmission Shift Interlock Solenoid	8W-31
Cabin Heater Assist	8W-30
Camshaft Position Sensor	8W-30
CD Changer	8W-47
Center High Mounted Stop Lamp	8W-51
Cinch/Release Motors	8W-61
Clockspring	8W-30, 33, 41, 43, 47
Clutch Pedal Interlock Switch	8W-21
Clutch Pedal Upstop Switch	8W-30
Controller Antilock Brake	8W-35
Crank Case Ventilation Heater	8W-30
Crankshaft Position Sensor	8W-30
Cylinder Lock Switches	8W-39
Data Link Connector	8W-18
Defogger Relay	8W-48
Door Ajar Switches	8W-39
Door Courtesy Lamps	8W-44
Door Lock Motor/Ajar Switches	8W-61
Door Lock Switches	8W-61

Component	Page
Dosing Pump	8W-30
DVD Screen	8W-47
DVD/CD Changer	8W-47
ECM/PCM Relay	8W-30
EGR Solenoid	8W-30
Electronic Control Unit	8W-64
Engine Control Module	8W-30
Engine Coolant Temp Sensor	8W-30
Engine Oil Pressure Sensor	8W-30
Engine Oil Pressure Switch	8W-30
EVAP/Purge Solenoid	8W-30
Evaporator Temperature Sensor	8W-42
Floor Console Lamp	8W-44
Fog Lamps	8W-50
Folding Mirror Relay	8W-62
Front Blower Module	8W-42
Front Cigar Lighter	8W-41
Front Control Module	8W-10
Front Fog Lamp Relay	8W-50
Front Intrusion Sensor	8W-39
Front Reading Lamps/Switch	8W-44
Front Wiper High/Low Relay	8W-53
Front Wiper On/Off Relay	8W-53
Fuel Heater	8W-30
Fuel Heater Relay	8W-30
Fuel Injectors	8W-30
Fuel Pressure Sensor	8W-30
Fuel Pressure Solenoid	8W-30
Fuel Pump Module	8W-30
Fuel Pump Relay	8W-30
Full Open Switches	8W-61
Fuselink	8W-10
Fuses	8W-10
Generator	8W-20
Glow Plug Relay	8W-30
Glow Plugs	8W-30
Grounds	8W-15
Hands Free Module	8W-47, 55
Headlamp Leveling Motors	8W-50
Headlamp Switch	8W-50
Headlamp Washer Pump Motor	8W-53
Headlamp Washer Relay	8W-53
Headlamps	8W-50
Heated Seat Backs	8W-63
Heated Seat Cushions	8W-63
Heated Seat Modules	8W-63
High Beam Lamps	8W-50
High Note Horn	8W-41
Hood Ajar Switch	8W-39
Horn Relay	8W-41
Horn Switch	8W-41
Idle Air Control Motor	8W-30

Component	Page
Ignition Coil	8W-30
Ignition Switch	8W-10
Impact Sensors	8W-43
Inlet Air Temperature Sensor	8W-30
Instrument Cluster	8W-40
Instrument Panel Switch Bank	8W-43, 44, 52, 53, 63
Integrated Power Module	8W-10
Knock Sensor	8W-30
Lamp Assemblies	8W-51
License Lamp	8W-51, 61
Lift Pump Motor	8W-30
Lift Pump Relay	8W-30
Liftgate Ajar Switch	8W-39, 61
Liftgate Cinch/Release Motor	8W-61
Liftgate Flood Lamps	8W-44
Liftgate Pinch Sensors	8W-61
Low Beam Lamps	8W-50
Manifold Absolute Pressure Sensor	8W-30
Mass Air Flow Sensor	8W-30
Memory Seat/Mirror/Adjustable Pedals Module	8W-56, 62, 63
Memory Set Switch	8W-63
Message Center	8W-40, 46
Mode Door Actuator	8W-42
Multi-Function Switch	8W-50, 52, 53
Natural Vacuum Leak Detection Assembly	8W-30
Occupant Classification Module	8W-43
Occupant Restraint Controller	8W-43
Overhead Console	8W-49
Oxygen Sensors	8W-30
Park Assist Display	8W-56
Park Assist Module	8W-56
Park Assist Sensors	8W-56
Park Lamp Relay	8W-10
Park Lamps	8W-50
Park/Turn Signal Lamps	8W-50
Parking Brake Switch	8W-40
Power Folding Mirror Switch	8W-62
Power Liftgate Module	8W-61
Power Liftgate Motor	8W-61
Power Mirror Switch	8W-62
Power Mirrors	8W-62
Power Outlets	8W-41
Power Seat Circuit Breaker	8W-10
Power Seat Motors	8W-63
Power Seat Position Sensors	8W-63
Power Seat Switches	8W-63
Power Window Circuit Breaker	8W-10
Power Window Motors	8W-60
Power Window Switches	8W-60
Powertrain Control Module	8W-30, 31
PTCs	8W-10
Radiator Fan Relaies	8W-42
Radiator Fans	8W-42
Radio	8W-47
Reading Lamps	8W-44
Rear A/C-Heater Unit	8W-42
Rear Auto Temp Control Switch	8W-42
Rear Blower Control Switches	8W-42
Rear Blower Motor Power Module	8W-42
Rear Dome Lamp	8W-44
Rear Intrusion Sensor	8W-39
Rear Mode Motor	8W-42
Rear Temperature Motor	8W-42
Rear View Mirror	8W-49, 55, 62
Rear Window Defogger Grid	8W-48
Rear Wiper Motor	8W-53
Recirculation Door Actuator	8W-42
Remote Radio Switches	8W-47
Repeater Lamps	8W-52
Seat Belt Switches	8W-43
Seat Belt Tensioners	8W-43
Seat Weight Sensor	8W-43
Sentry Key Remote Entry Module	8W-39
Siren	8W-39
Sliding Door Control Modules	8W-61
Sliding Door Latch Sensing Switches	8W-61
Sliding Door Lock Motors	8W-61
Sliding Door Motors	8W-61
Speakers	8W-47
Speed Control Servo	8W-33
Speed Control Switches	8W-33
Speed Sensors	8W-31
Splices	8W-70
Starter Motor	8W-21
Starter Motor Relay	8W-21
Sunroof Module	8W-64
Sunroof Switch	8W-64
Thatcham Alarm Indicator	8W-39
Thatcham Alarm Module	8W-39
Throttle Position Sensor	8W-30
Traction Control Switch	8W-35
Trailer Tow Connector	8W-54
Transmission Control Module	8W-31
Transmission Control Relay	8W-31
Transmission Range Sensor	8W-31
Transmission Solenoid/Pressure Switch Assembly	8W-31
Turn Signal Lamps	8W-52
Vehicle Speed Sensor	8W-30
Vent Motors	8W-60
Visor/Vanity Lamps	8W-44
Washer Fluid Level Switch	8W-53
Washer Pump Motor	8W-53
Water In Fuel Sensor	8W-30
Wheel Speed Sensors	8W-35
Wiper Module	8W-53

8W-10 POWER DISTRIBUTION

Component	Page
A/C Compressor Clutch	8W-10-22, 24, 45, 48
A/C Compressor Clutch Relay	8W-10-22, 24, 44, 45, 48
Accessory Relay	8W-10-16, 31, 65
Adjustable Pedals Relay	8W-10-47, 60
Adjustable Pedals Switch	8W-10-40, 47
Ambient Temperature Sensor	8W-10-62
Amplifier	8W-10-32, 50
Auto Shut Down Relay	8W-10-21, 41
Auto Temp Control	8W-10-40
Back-Up Lamp Switch	8W-10-66
Battery	8W-10-13, 14, 15, 41, 48
Blower Motor Resistor	8W-10-19, 38
Body Control Module	8W-10-25, 40, 45, 49, 50, 52, 54, 55, 56, 57, 67, 68
Brake Fluid Level Switch	8W-10-65
Brake Lamp Switch	8W-10-26, 52, 67
Brake Transmission Shift Interlock Solenoid	8W-10-63
Cabin Heater Assist	8W-10-23, 43, 60
Camshaft Position Sensor	8W-10-44
Center High Mounted Stop Lamp	8W-10-67
Clockspring	8W-10-61
Clutch Pedal Interlock Switch	8W-10-18, 37, 54, 55, 61
Controller Antilock Brake	8W-10-18, 25, 36, 37, 50, 56, 62, 67
Crank Case Ventilation Heater	8W-10-49
Data Link Connector	8W-10-35, 62, 68
Defogger Relay	8W-10-19, 20, 39, 64
Driver Heated Seat Module	8W-10-50
Driver Power Seat Switch	8W-10-50
Driver Power Window Switch	8W-10-33, 34
DVD/CD Changer	8W-10-40
ECM/PCM Relay	8W-10-23, 43
EGR Solenoid	8W-10-44
Engine Control Module	8W-10-18, 23, 24, 37, 43, 44, 48, 62, 67
Floor Console Lamp	8W-10-32
Floor Console Power Outlet	8W-10-32, 35
Front Blower Module	8W-10-19, 38
Front Blower Motor Relay	8W-10-18, 19, 38, 64
Front Cigar Lighter	8W-10-16, 32
Front Control Module	8W-10-15, 16, 17, 18, 19, 20, 22, 24, 26, 27, 28, 29, 30, 31, 35, 36, 37, 38, 39, 45, 47, 48, 53, 54, 55, 58, 59, 60, 61, 62, 63, 64, 65, 66, 67, 68, 69
Front Fog Lamp Relay	8W-10-15, 27, 64
Front Wiper High/Low Relay	8W-10-16, 30, 65
Front Wiper On/Off Relay	8W-10-16, 30, 60
Fuel Heater	8W-10-49
Fuel Heater Relay	8W-10-24, 48, 65
Fuel Injector No. 1	8W-10-42
Fuel Injector No. 2	8W-10-42
Fuel Injector No. 3	8W-10-42
Fuel Injector No. 4	8W-10-42
Fuel Injector No. 5	8W-10-42
Fuel Injector No. 6	8W-10-42
Fuel Pressure Solenoid	8W-10-44
Fuel Pump Module	8W-10-22, 45
Fuel Pump Relay	8W-10-22, 45, 65
Fuse 1	8W-10-15, 16, 27
Fuse 2	8W-10-15, 28, 29
Fuse 3	8W-10-15, 28, 29
Fuse 4	8W-10-15, 16, 17, 30
Fuse 5	8W-10-16, 31
Fuse 6	8W-10-16, 31
Fuse 8	8W-10-17, 35
Fuse 9	8W-10-17, 18, 19, 36, 37
Fuse 10	8W-10-19, 38
Fuse 11	8W-10-16, 31
Fuse 12	8W-10-19, 38
Fuse 13	8W-10-20, 39
Fuse 14	8W-10-20, 21, 23, 39, 47, 60
Fuse 15	8W-10-20, 21, 22, 23, 24, 41, 43
Fuse 16	8W-10-21, 23, 41, 43
Fuse 17	8W-10-21, 22, 23, 24, 45, 48
Fuse 18	8W-10-22, 24, 25, 45, 48
Fuse 19	8W-10-22, 24, 25, 26, 50
Fuse 20	8W-10-25, 50
Fuse 21	8W-10-25, 50
Fuse 22	8W-10-25, 50
Fuse 23	8W-10-25, 54, 55
Fuse 24	8W-10-25, 52
Fuse 26	8W-10-25, 26, 52
Fuse 27	8W-10-26, 52
Fuse 28	8W-10-16, 31
Fuse 30	8W-10-26, 53
Fuse 31	8W-10-26, 53
Fuse 32	8W-10-26, 53
Fuselink	8W-10-13, 14
G100	8W-10-56
G101	8W-10-41, 48, 68
G103	8W-10-68
G300	8W-10-58, 59
Generator	8W-10-13, 14, 44
Glow Plug Relay	8W-10-13, 44
Hands Free Module	8W-10-40
Headlamp Switch	8W-10-29, 63
Headlamp Washer Pump Motor	8W-10-26, 53
Headlamp Washer Relay	8W-10-26, 53, 64

Component	Page
High Note Horn	8W-10-17, 35
Horn Relay	8W-10-17, 35, 60
Ignition Coil	8W-10-42
Ignition Switch	8W-10-18, 25, 36, 37, 45, 46, 49, 54, 55, 61
Instrument Cluster	8W-10-25, 52
Instrument Panel Switch Bank	8W-10-69
Integrated Power Module	8W-10-3, 4, 5, 13, 15, 16, 17, 18, 19, 20, 21, 22, 23, 24, 25, 26, 27, 28, 29, 30, 31, 32, 35, 36, 37, 38, 39, 40, 41, 42, 43, 44, 45, 47, 48, 49, 50, 52, 53, 54, 55, 56, 57, 58, 59, 60, 61, 62, 63, 64, 65, 66, 67, 68, 69
Left Fog Lamp	8W-10-15, 27
Left Front Park/Turn Signal Lamp	8W-10-15, 28, 57, 66
Left Headlamp	8W-10-58
Left Headlamp Leveling Motor	8W-10-29, 63, 66
Left High Beam Lamp	8W-10-59
Left Low Beam Lamp	8W-10-59
Left Park Lamp	8W-10-29, 59, 66
Left Power Mirror	8W-10-39
Left Rear Lamp Assembly	8W-10-28, 29, 66
Left Repeater Lamp	8W-10-52
Left Sliding Door Control Module	8W-10-26, 53
Left Turn Signal Lamp	8W-10-57
License Lamp	8W-10-28, 29, 66
Lift Pump Motor	8W-10-23, 43
Lift Pump Relay	8W-10-23, 43
Mass Air Flow Sensor	8W-10-44
Memory Seat/Mirror/Adjustable Pedals Module	8W-10-50
Message Center	8W-10-52
Occupant Classification Module	8W-10-69
Occupant Restraint Controller	8W-10-64, 69
Overhead Console	8W-10-40
Park Assist Module	8W-10-45, 54
Park Lamp Relay	8W-10-15, 28, 29, 60
Passenger Airbag On/Off Indicator Lamp	8W-10-69
Passenger Folding Mirror Relay	8W-10-22, 24, 45, 48
Passenger Heated Seat Module	8W-10-51
Passenger Power Seat Switch	8W-10-51
Passenger Power Window Switch	8W-10-31
Power Liftgate Module	8W-10-26, 53
Power Mirror Switch	8W-10-22, 24, 47, 48
Power Outlet	8W-10-35
Power Seat Circuit Breaker	8W-10-25, 50
Power Window Circuit Breaker	8W-10-16, 31
Power Window Switch	8W-10-33
Powertrain Control Module	8W-10-18, 21, 22, 36, 41, 42, 45, 56, 62, 63, 68
PTC 4	8W-10-20, 39
PTC 7	8W-10-16, 17, 18, 35
Radiator Fan Relay	8W-10-26, 52, 56
Radiator Fan Relay No. 1	8W-10-13, 44
Radiator Fan Relay No. 2	8W-10-26, 44, 52
Radiator Fan Relay No. 3	8W-10-44
Radio	8W-10-32, 40
Rear A/C-Heater Unit	8W-10-19, 38
Rear Blower Motor Power Module	8W-10-19, 38
Rear Blower Motor Relay	8W-10-19, 20, 38, 64
Rear Power Outlet	8W-10-16, 31, 32
Rear Window Defogger Grid	8W-10-20, 39
Rear Wiper Motor	8W-10-16, 31
Right Fog Lamp	8W-10-15, 27
Right Front Park/Turn Signal Lamp	8W-10-15, 28, 57, 61
Right Headlamp	8W-10-58
Right Headlamp Leveling Motor	8W-10-29, 61, 63
Right High Beam Lamp	8W-10-59
Right Low Beam Lamp	8W-10-59
Right Park Lamp	8W-10-29, 59, 61
Right Power Mirror	8W-10-39
Right Rear Lamp Assembly	8W-10-15, 28, 29, 61, 67
Right Repeater Lamp	8W-10-52
Right Sliding Door Control Module	8W-10-26, 53
Right Turn Signal Lamp	8W-10-57
Sentry Key Remote Entry Module	8W-10-40, 46, 49, 54, 55
Siren	8W-10-40
Starter Motor	8W-10-13, 14, 18, 36, 37
Starter Motor Relay	8W-10-18, 36, 37, 54, 55
Sunroof Module	8W-10-31, 53
Thatcham Alarm Module	8W-10-40, 46, 49, 55, 68
Trailer Tow Connector	8W-10-28, 66
Transmission Control Module	8W-10-13, 62
Transmission Control Relay	8W-10-13, 21, 41
Transmission Solenoid/Pressure Switch Assembly	8W-10-41
Vehicle Speed Sensor	8W-10-43
Washer Fluid Level Switch	8W-10-61
Washer Pump Motor	8W-10-69
Wiper Module	8W-10-16, 30, 60

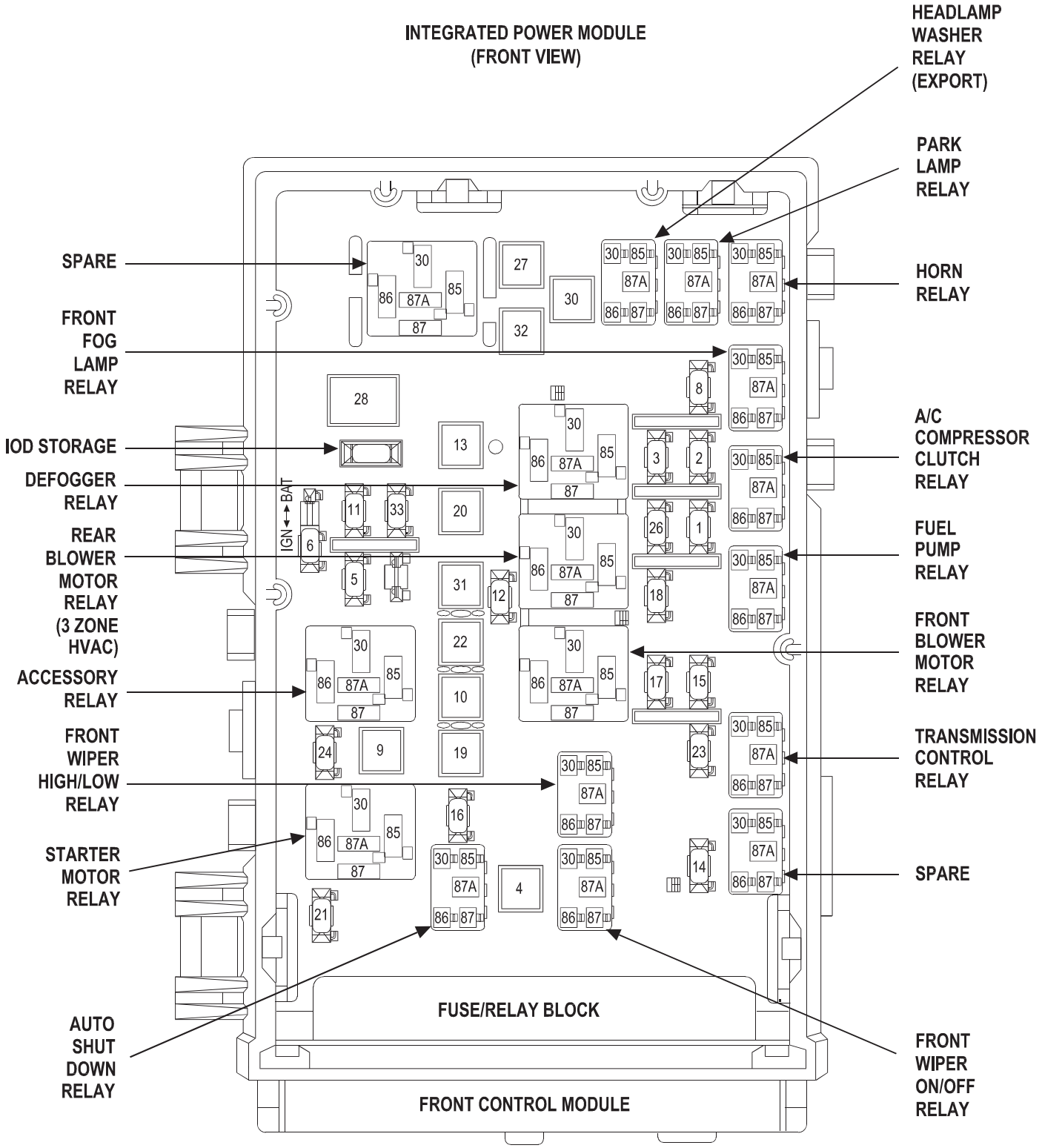
INTEGRATED POWER MODULE
(FRONT VIEW)
HEADLAMP WASHER RELAY (EXPORT)
PARK LAMP RELAY
SPARE
HORN RELAY
FRONT FOG LAMP RELAY
IOD STORAGE
A/C COMPRESSOR CLUTCH RELAY
DEFOGGER RELAY
FUEL PUMP RELAY
REAR BLOWER MOTOR RELAY (3 ZONE HVAC)
FRONT BLOWER MOTOR RELAY
ACCESSORY RELAY
TRANSMISSION CONTROL RELAY
FRONT WIPER HIGH/LOW RELAY
SPARE
STARTER MOTOR RELAY
AUTO SHUT DOWN RELAY
FRONT WIPER ON/OFF RELAY
IGN
BAT
FUSE/RELAY BLOCK
FRONT CONTROL MODULE

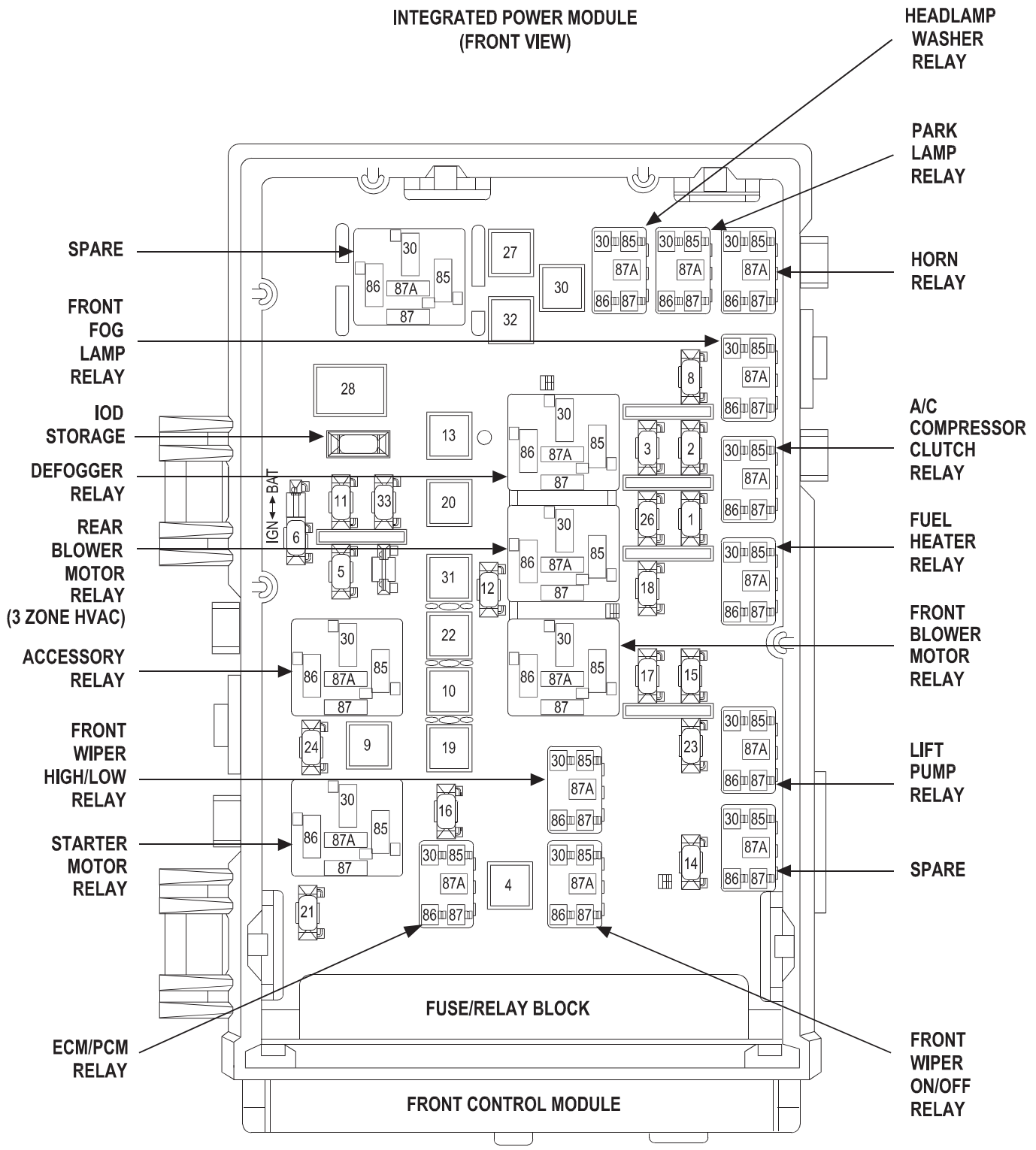
INTEGRATED POWER MODULE
(FRONT VIEW)
HEADLAMP WASHER RELAY
PARK LAMP RELAY
HORN RELAY
SPARE
FRONT FOG LAMP RELAY
IOD STORAGE
DEFOGGER RELAY
REAR BLOWER MOTOR RELAY (3 ZONE HVAC)
ACCESSORY RELAY
FRONT WIPER HIGH/LOW RELAY
STARTER MOTOR RELAY
ECM/PCM RELAY
A/C COMPRESSOR CLUTCH RELAY
FUEL HEATER RELAY
FRONT BLOWER MOTOR RELAY
LIFT PUMP RELAY
SPARE
FRONT WIPER ON/OFF RELAY
IGN
BAT
FUSE/RELAY BLOCK
FRONT CONTROL MODULE

INTEGRATED POWER MODULE
(REAR VIEW)

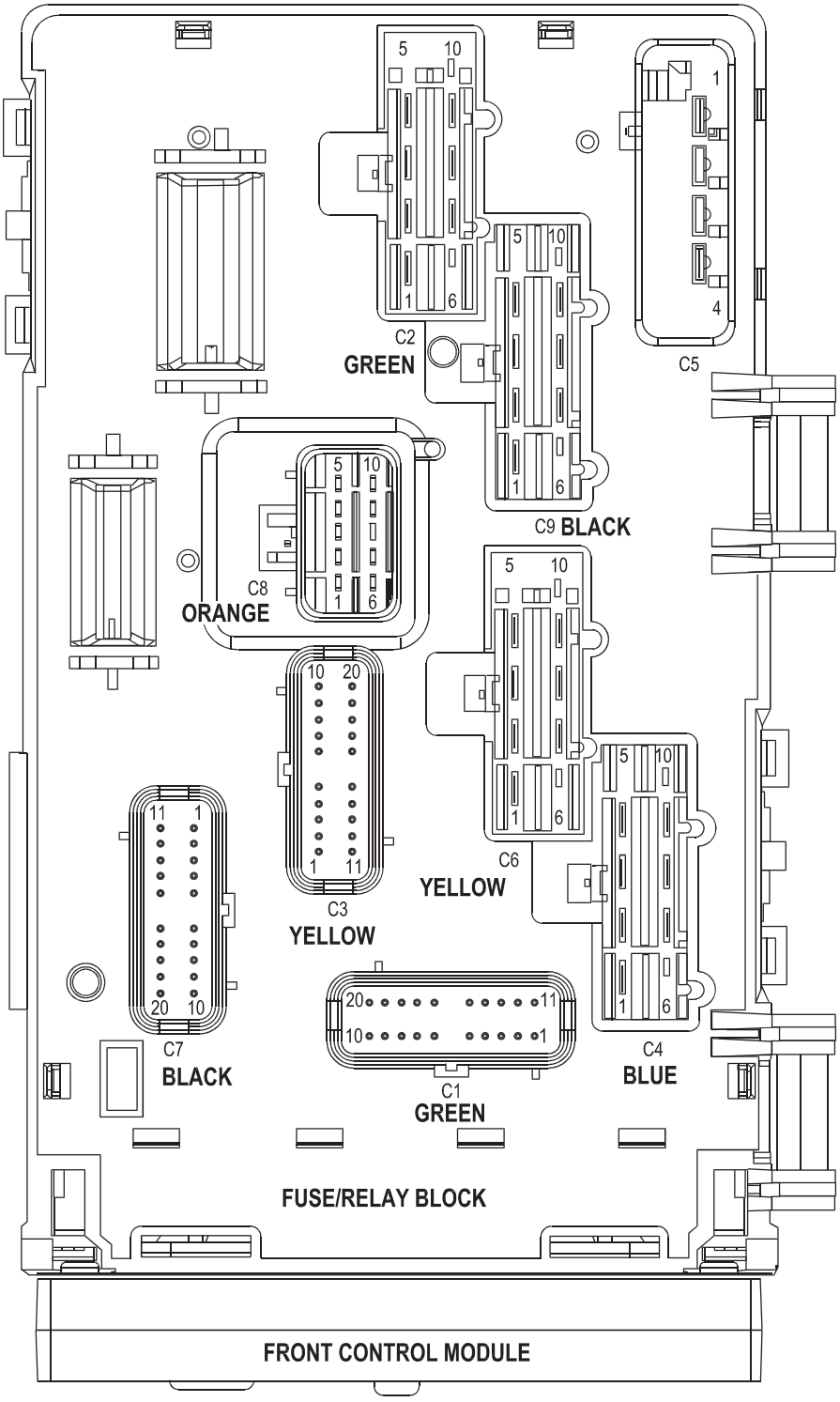

FUSES

FUSE NO.	AMPS	FUSED CIRCUIT	FUNCTION
1	20A	INTERNAL ○○○	FUSED B(+)
2	15A	INTERNAL	FUSED PARK LAMP RELAY OUTPUT (LEFT)
3	15A	INTERNAL	FUSED PARK LAMP RELAY OUTPUT (RIGHT)
4	30A	INTERNAL	FUSED B(+)
5	20A	F306 16DB/PK	FUSED ACCESSORY RELAY OUTPUT
6	20A	F307 18LB/PK ◪◪◪	FUSED B(+)
6	20A	F307 18LB/PK ◪◪◪◪	FUSED ACCESSORY RELAY OUTPUT
8	20A	INTERNAL	FUSED B(+)
9	40A	INTERNAL	FUSED B(+)
10	40A	C7 12DB	FUSED FRONT BLOWER MOTOR RELAY OUTPUT
11	20A	F302 18GY/PK	FUSED ACCESSORY RELAY OUTPUT
12	25A	C51 12LB/BR □□□	FUSED REAR BLOWER MOTOR RELAY OUTPUT
13	40A	C15 12DB/WT	FUSED DEFOGGER RELAY OUTPUT
14	20A	INTERNAL	FUSED B(+) (I.O.D.)
15	20A	INTERNAL ⬒	FUSED B(+)
15	20A	INTERNAL ○○	FUSED B(+)
16	25A	INTERNAL	FUSED B(+)
17	20A	INTERNAL	FUSED B(+)
18	15A	INTERNAL	FUSED B(+)
19	40A	A101 12VT/RD	FUSED B(+)
20	30A	A116 14YL/RD ◓◓◓	FUSED B(+)
21	25A	A111 12DG/RD ◇◇◇	FUSED B(+)
22	40A	A110 12OR/RD	FUSED B(+)
23	10A	A106 20LB/RD	FUSED B(+)
24	20A	A701 16BR/RD	FUSED B(+) (HAZARD)
26	20A	A103 18GY/RD	FUSED B(+)
27	40A	A112 12OR/RD	FUSED B(+)
28	40A	F30 12PK/YL	FUSED ACCESSORY RELAY OUTPUT
30	40A	INTERNAL ▲▲	FUSED B(+)
31	40A	A113 12WT/RD	FUSED B(+)
32	40A	A115 12YL/RD	FUSED B(+)

⬒ EATX GAS
▲▲ EXPORT
◇◇◇ ABS
○○ DIESEL
○○○ FOG LAMPS
◓◓◓ HIGHLINE AUDIO
□□□ 3 ZONE HVAC
◪◪◪ BATTERY POSITION
◪◪◪◪ ACCESSORY RELAY POSITION

POSITIVE TEMPERATURE COEFFICIENTS

PTC NO.	AMPS	FUSED CIRCUIT	FUNCTION
4	8A	C16 20DB/GY	FUSED DEFOGGER RELAY OUTPUT
7	13A	A105 18DB/RD	FUSED B(+)

RELAYS

A/C COMPRESSOR CLUTCH RELAY

CAVITY	CIRCUIT	FUNCTION
30	INTERNAL	FUSED B(+)
85	C13 18LB/OR o	A/C CLUTCH RELAY CONTROL
85	C13 20LB/OR oo	A/C COMPRESSOR CLUTCH RELAY CONTROL
86	F202 18PK/GY o	FUSED IGNITION SWITCH OUTPUT (RUN-START)
86	K342 16BR/WT oo	ECM/PCM RELAY OUTPUT
87	C3 18DB/YL	A/C COMPRESSOR CLUTCH RELAY OUTPUT
87A	-	-

ACCESSORY RELAY

CAVITY	CIRCUIT	FUNCTION
30	INTERNAL	B(+)
85	FCM 35	ACCESSORY RELAY CONTROL (RUN-ACC)
86	INTERNAL	B(+)
87	INTERNAL	FUSED ACCESSORY RELAY OUTPUT
87A	-	-

AUTO SHUT DOWN RELAY (GAS)

CAVITY	CIRCUIT	FUNCTION
30	K342 16BR/WT	ASD RELAY OUTPUT
85	K51 18BR/WT	ASD RELAY CONTROL
86	INTERNAL	FUSED B(+)
87	INTERNAL	FUSED B(+)
87A	-	-

o GAS
oo DIESEL

DEFOGGER RELAY

CAVITY	CIRCUIT	FUNCTION
30	INTERNAL	B(+)
85	FCM 31	DEFOGGER RELAY CONTROL
86	INTERNAL	B(+)
87	INTERNAL	DEFOGGER RELAY OUTPUT
87A	-	-

ECM/PCM RELAY (DIESEL)

CAVITY	CIRCUIT	FUNCTION
30	INTERNAL	FUSED B(+)
85	K51 20BR/WT	ECM/PCM RELAY CONTROL
86	INTERNAL	FUSED B(+)
87	K342 16BR/WT	ECM/PCM RELAY OUTPUT
87A	-	-

FRONT BLOWER MOTOR RELAY

CAVITY	CIRCUIT	FUNCTION
30	INTERNAL	B(+)
85	FCM 30	FRONT BLOWER MOTOR RELAY CONTROL
86	INTERNAL	B(+)
87	C7 12DB	FUSED FRONT BLOWER MOTOR RELAY OUTPUT
87A	-	-

FRONT FOG LAMP RELAY

CAVITY	CIRCUIT	FUNCTION
30	INTERNAL	FUSED B(+)
85	FCM 33	FRONT FOG LAMP RELAY CONTROL
86	INTERNAL	FUSED B(+)
87	INTERNAL	FRONT FOG LAMP RELAY OUTPUT
87A	-	-

FRONT WIPER HIGH/LOW RELAY

CAVITY	CIRCUIT	FUNCTION
30	INTERNAL	FRONT WIPER ON/OFF RELAY OUTPUT
85	FCM 34	FRONT WIPER HIGH/LOW RELAY CONTROL
86	INTERNAL	FRONT WIPER ON/OFF RELAY OUTPUT
87	W4 12BR/OR	FRONT WIPER HIGH/LOW RELAY HIGH SPEED OUTPUT
87A	W3 12BR/WT	FRONT WIPER HIGH/LOW RELAY LOW SPEED OUTPUT

FRONT WIPER ON/OFF RELAY

CAVITY	CIRCUIT	FUNCTION
30	INTERNAL	FRONT WIPER ON/OFF RELAY OUTPUT
85	INTERNAL	FUSED B(+)
86	FCM 14	FRONT WIPER ON/OFF RELAY CONTROL
87	INTERNAL	FUSED B(+)
87A	INTERNAL	GROUND

FUEL HEATER RELAY (DIESEL)

CAVITY	CIRCUIT	FUNCTION
30	INTERNAL	FUSED B(+)
85	Z114 18BK/LG	GROUND
86	INTERNAL	FUSED IGNITION SWITCH OUTPUT (RUN-START)
87	N1 16DB/OR	FUEL HEATER RELAY OUTPUT
87A	-	-

FUEL PUMP RELAY (GAS)

CAVITY	CIRCUIT	FUNCTION
30	N1 18DB/OR	FUEL PUMP RELAY OUTPUT
85	K31 18BR	FUEL PUMP RELAY CONTROL
86	INTERNAL	FUSED IGNITION SWITCH OUTPUT (RUN-START)
87	INTERNAL	FUSED B(+)
87A	-	-

HEADLAMP WASHER RELAY (EXPORT)

CAVITY	CIRCUIT	FUNCTION
30	INTERNAL	FUSED B(+)
85	FCM 32	HEADLAMP WASHER RELAY CONTROL
86	INTERNAL	FUSED B(+)
87	V53 12BR/OR	HEADLAMP WASHER RELAY OUTPUT
87A	-	-

HORN RELAY

CAVITY	CIRCUIT	FUNCTION
30	INTERNAL	FUSED B(+)
85	FCM 10	HORN RELAY CONTROL
86	INTERNAL	FUSED B(+)
87	X2 18DG/OR	HORN RELAY OUTPUT
87A	-	-

LIFT PUMP RELAY (DIESEL)

CAVITY	CIRCUIT	FUNCTION
30	INTERNAL	FUSED B(+)
85	N21 20DB/TN	LIFT PUMP RELAY CONTROL
86	F202 18PK/GY	FUSED IGNITION SWITCH OUTPUT (RUN-START)
87	N2 18DB/YL	LIFT PUMP RELAY OUTPUT
87A	-	-

PARK LAMP RELAY

CAVITY	CIRCUIT	FUNCTION
30	INTERNAL	B(+)
85	FCM 13	PARK LAMP RELAY CONTROL
86	INTERNAL	B(+)
87	INTERNAL	PARK LAMP RELAY OUTPUT
87A	-	-

REAR BLOWER MOTOR RELAY (3 ZONE HVAC)

CAVITY	CIRCUIT	FUNCTION
30	INTERNAL	B(+)
85	FCM 30	REAR BLOWER MOTOR RELAY CONTROL
86	INTERNAL	B(+)
87	C51 12LB/BR	FUSED REAR BLOWER MOTOR RELAY OUTPUT
87A	-	-

STARTER MOTOR RELAY

CAVITY	CIRCUIT	FUNCTION
30	INTERNAL	FUSED B(+)
85	T752 18DG/OR ○	STARTER MOTOR RELAY CONTROL
85	T752 20DG/OR ○○	STARTER MOTOR RELAY CONTROL
86	INTERNAL	FUSED IGNITION SWITCH OUTPUT (START)
87	T750 12YL/GY	STARTER MOTOR RELAY OUTPUT
87A	-	-

TRANSMISSION CONTROL RELAY (GAS)

CAVITY	CIRCUIT	FUNCTION
30	T16 18YL/OR	TRANSMISSION CONTROL RELAY OUTPUT
85	Z115 18BK/OR *	GROUND
85	Z115 20BK/OR **	GROUND
86	T15 18YL/BR	TRANSMISSION CONTROL RELAY CONTROL
87	INTERNAL	FUSED B(+)
87A	-	-

○ GAS
○○ DIESEL
* 2.4L
** 3.3L/3.8L

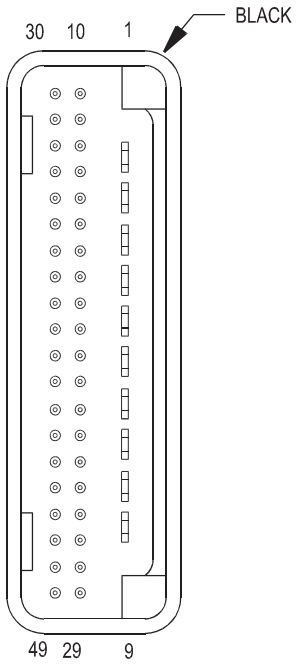

FRONT CONTROL MODULE

CAV	CIRCUIT	FUNCTION
1	A1	B(+)
2	A1	B(+)
3	L43	LEFT LOW BEAM DRIVER
4	L34	RIGHT HIGH BEAM DRIVER
5	L33	LEFT HIGH BEAM DRIVER
6	L44	RIGHT LOW BEAM DRIVER
7	-	-
8	Z117, Z118, Z343, Z344	GROUND
9	A1	B(+)
10	FCM 10	HORN RELAY CONTROL
11	-	-
12	P201 ◆◆◆◆	ADJUSTABLE PEDALS RELAY CONTROL
13	FCM 13	PARK LAMP RELAY CONTROL
14	FCM 14	FRONT WIPER ON/OFF RELAY CONTROL
15	C41 ○○	CABIN HEATER ASSIST CONTROL
16	W7	WIPER PARK SWITCH SENSE
17	X3	HORN SWITCH SENSE
18	W1	WASHER FLUID LEVEL SWITCH SENSE
19	FCM 19	FUSED IGNITION SWITCH OUTPUT (START)
20	-	-
21	L78	FUSED PARK LAMP RELAY OUTPUT (RIGHT)
22	D25	PCI BUS
23	G931 ○○	AMBIENT TEMPERATURE SENSOR RETURN
24	-	-
25	G31 ○○	AMBIENT TEMPERATURE SENSOR SIGNAL
26	L13 ▲▲	HEADLAMP ADJUST SIGNAL
27	F1, F2	FCM OUTPUT (UNLOCK-RUN-START)
28	-	-
29	F100	ORC RUN ONLY DRIVER
30	FCM 30	FRONT/REAR BLOWER MOTOR RELAY CONTROL
31	FCM 31	DEFOGGER RELAY CONTROL
32	FCM 32 ▲▲	HEADLAMP WASHER RELAY CONTROL
33	FCM 33	FRONT FOG LAMP RELAY CONTROL
34	FCM 34	FRONT WIPER HIGH/LOW RELAY CONTROL
35	FCM 35	ACCESSORY RELAY CONTROL (RUN-ACC)
36	B20	BRAKE FLUID LEVEL SWITCH SENSE
37	F20	FUSED IGNITION SWITCH OUTPUT (RUN-START)
38	A1	B(+) (WHEN IPM C5 CPA IS NOT ENGAGED)
39	T2 ■	TRS REVERSE SENSE
40	-	-
41	L77	FUSED PARK LAMP RELAY OUTPUT (LEFT)
42	D123	FLASH PROGRAM ENABLE
43	Z116	GROUND
44	L50 ○○	PRIMARY BRAKE SWITCH SIGNAL
44	L50 ○	BRAKE LAMP SWITCH OUTPUT
45	W10	FRONT WASHER PUMP MOTOR CONTROL
46	W20	REAR WASHER PUMP MOTOR CONTROL
47	K32	BRAKE TRANSMISSION SHIFT INTERLOCK SOLENOID CONTROL
48	F201	ORC RUN-START DRIVER
49	-	-

○ GAS
○○ DIESEL ■ MTX
▲▲ EXPORT ◆◆◆◆ EXCEPT EXPORT EXCEPT MEMORY

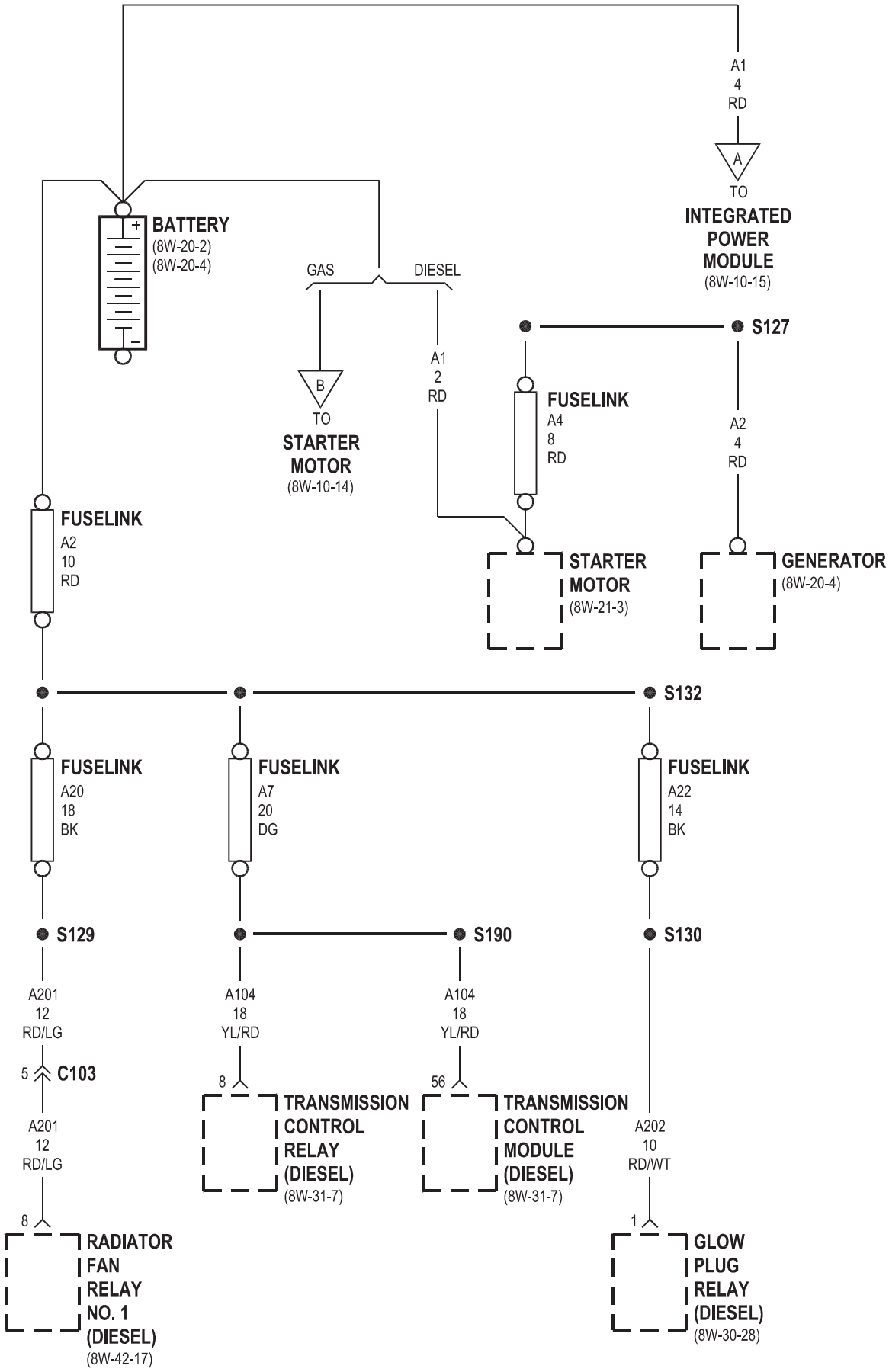
A1
4
RD
A
TO
INTEGRATED
POWER
MODULE
(8W-10-15)
BATTERY
(8W-20-2)
(8W-20-4)
GAS
DIESEL
B
TO
STARTER
MOTOR
(8W-10-14)
A1
2
RD
S127
FUSELINK
A4
8
RD
A2
4
RD
FUSELINK
A2
10
RD
STARTER
MOTOR
(8W-21-3)
GENERATOR
(8W-20-4)
S132
FUSELINK
A20
18
BK
FUSELINK
A7
20
DG
FUSELINK
A22
14
BK
S129
S190
S130
A201
12
RD/LG
5
C103
A201
12
RD/LG
8
RADIATOR
FAN
RELAY
NO. 1
(DIESEL)
(8W-42-17)
A104
18
YL/RD
8
TRANSMISSION
CONTROL
RELAY
(DIESEL)
(8W-31-7)
A104
18
YL/RD
56
TRANSMISSION
CONTROL
MODULE
(DIESEL)
(8W-31-7)
A202
10
RD/WT
1
GLOW
PLUG
RELAY
(DIESEL)
(8W-30-28)

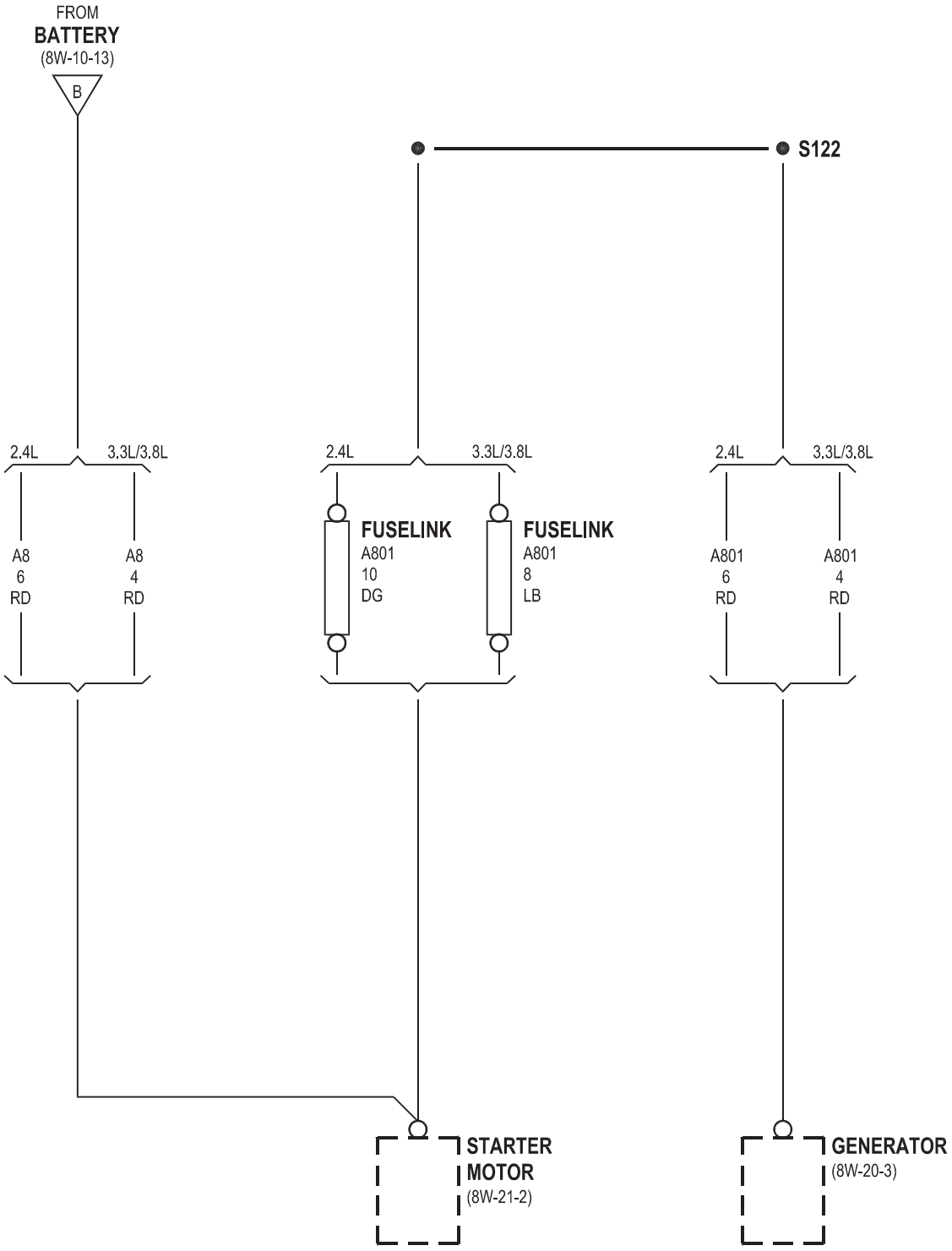
FROM
BATTERY
(8W-10-13)
B
S122
2.4L
3.3L/3.8L
A8
6
RD
A8
4
RD
2.4L
3.3L/3.8L
FUSELINK
A801
10
DG
FUSELINK
A801
8
LB
2.4L
3.3L/3.8L
A801
6
RD
A801
4
RD
STARTER
MOTOR
(8W-21-2)
GENERATOR
(8W-20-3)

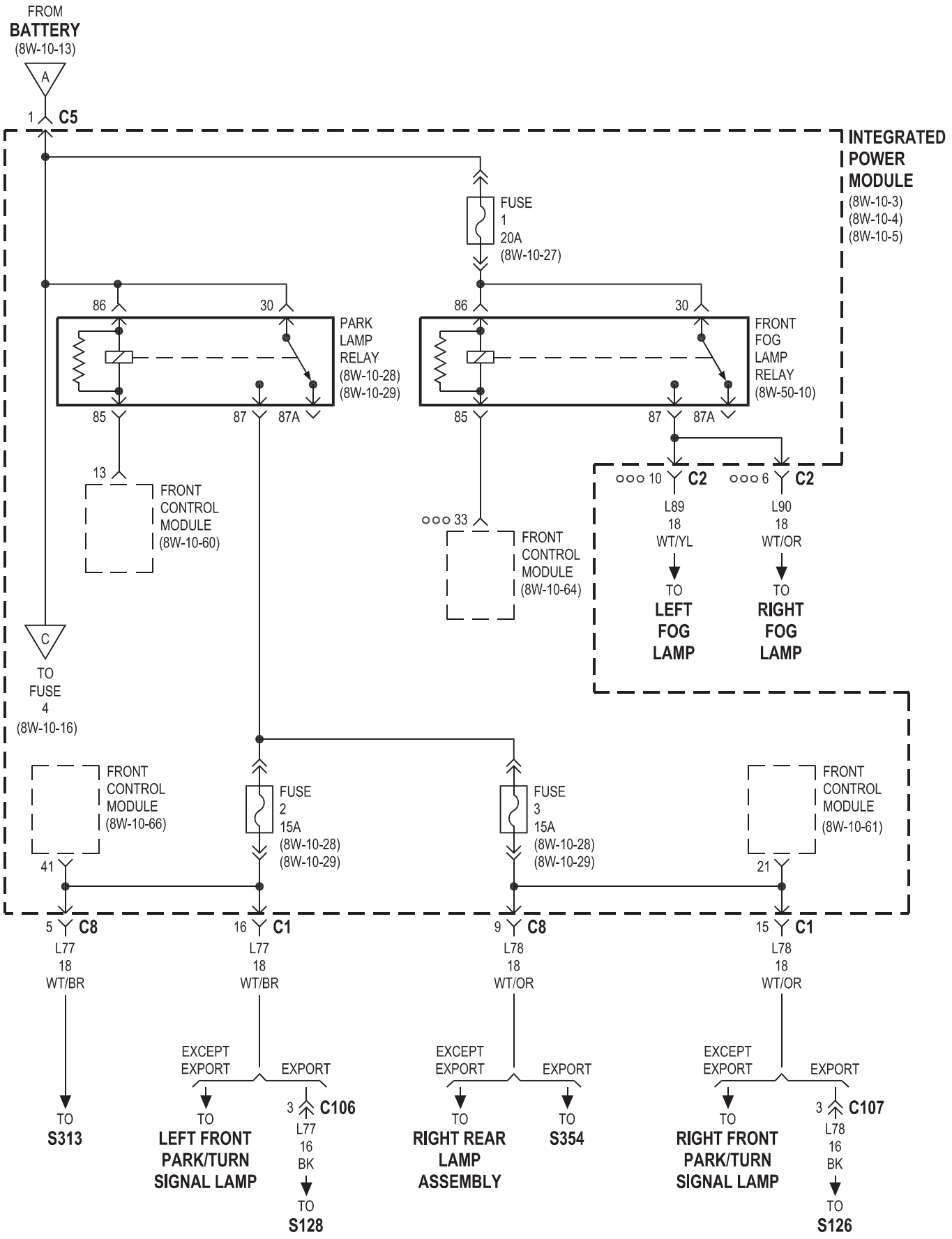
FROM
BATTERY
(8W-10-13)
A
1 C5
INTEGRATED
POWER
MODULE
(8W-10-3)
(8W-10-4)
(8W-10-5)
FUSE
1
20A
(8W-10-27)
86
30
PARK
LAMP
RELAY
(8W-10-28)
(8W-10-29)
85
87
87A
86
30
FRONT
FOG
LAMP
RELAY
(8W-50-10)
85
87
87A
13
FRONT
CONTROL
MODULE
(8W-10-60)
33
FRONT
CONTROL
MODULE
(8W-10-64)
10 C2
6 C2
L89
18
WT/YL
L90
18
WT/OR
TO
LEFT
FOG
LAMP
TO
RIGHT
FOG
LAMP
C
TO
FUSE
4
(8W-10-16)
FRONT
CONTROL
MODULE
(8W-10-66)
FUSE
2
15A
(8W-10-28)
(8W-10-29)
FUSE
3
15A
(8W-10-28)
(8W-10-29)
FRONT
CONTROL
MODULE
(8W-10-61)
41
21
5 C8
16 C1
9 C8
15 C1
L77
18
WT/BR
L77
18
WT/BR
L78
18
WT/OR
L78
18
WT/OR
EXCEPT
EXPORT
EXPORT
EXCEPT
EXPORT
EXPORT
EXCEPT
EXPORT
EXPORT
TO
S313
TO
LEFT FRONT
PARK/TURN
SIGNAL LAMP
3 C106
L77
16
BK
TO
S128
TO
RIGHT REAR
LAMP
ASSEMBLY
TO
S354
TO
RIGHT FRONT
PARK/TURN
SIGNAL LAMP
3 C107
L78
16
BK
TO
S126
FOG LAMPS

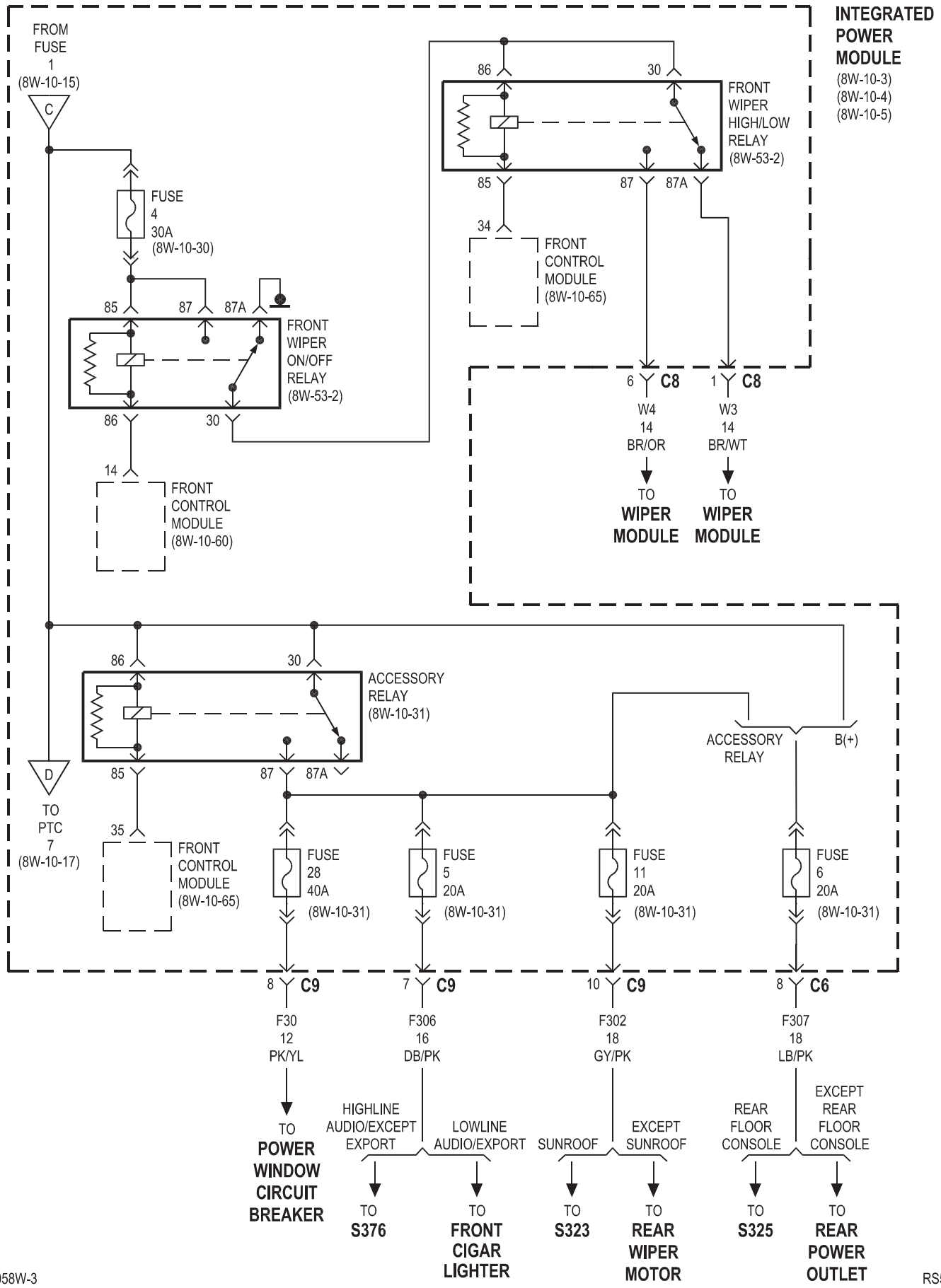
INTEGRATED POWER MODULE
(8W-10-3)
(8W-10-4)
(8W-10-5)
FROM FUSE 1 (8W-10-15)
C
FUSE 4 30A (8W-10-30)
85
87
87A
FRONT WIPER ON/OFF RELAY (8W-53-2)
86
30
14
FRONT CONTROL MODULE (8W-10-60)
86
30
FRONT WIPER HIGH/LOW RELAY (8W-53-2)
85
87
87A
34
FRONT CONTROL MODULE (8W-10-65)
6 C8
1 C8
W4 14 BR/OR
W3 14 BR/WT
TO WIPER MODULE
TO WIPER MODULE
D
TO PTC 7 (8W-10-17)
86
30
ACCESSORY RELAY (8W-10-31)
85
87
87A
35
FRONT CONTROL MODULE (8W-10-65)
ACCESSORY RELAY
B(+)
FUSE 28 40A (8W-10-31)
FUSE 5 20A (8W-10-31)
FUSE 11 20A (8W-10-31)
FUSE 6 20A (8W-10-31)
8 C9
7 C9
10 C9
8 C6
F30 12 PK/YL
F306 16 DB/PK
F302 18 GY/PK
F307 18 LB/PK
TO POWER WINDOW CIRCUIT BREAKER
HIGHLINE AUDIO/EXCEPT EXPORT
LOWLINE AUDIO/EXPORT
SUNROOF
EXCEPT SUNROOF
REAR FLOOR CONSOLE
EXCEPT REAR FLOOR CONSOLE
TO S376
TO FRONT CIGAR LIGHTER
TO S323
TO REAR WIPER MOTOR
TO S325
TO REAR POWER OUTLET

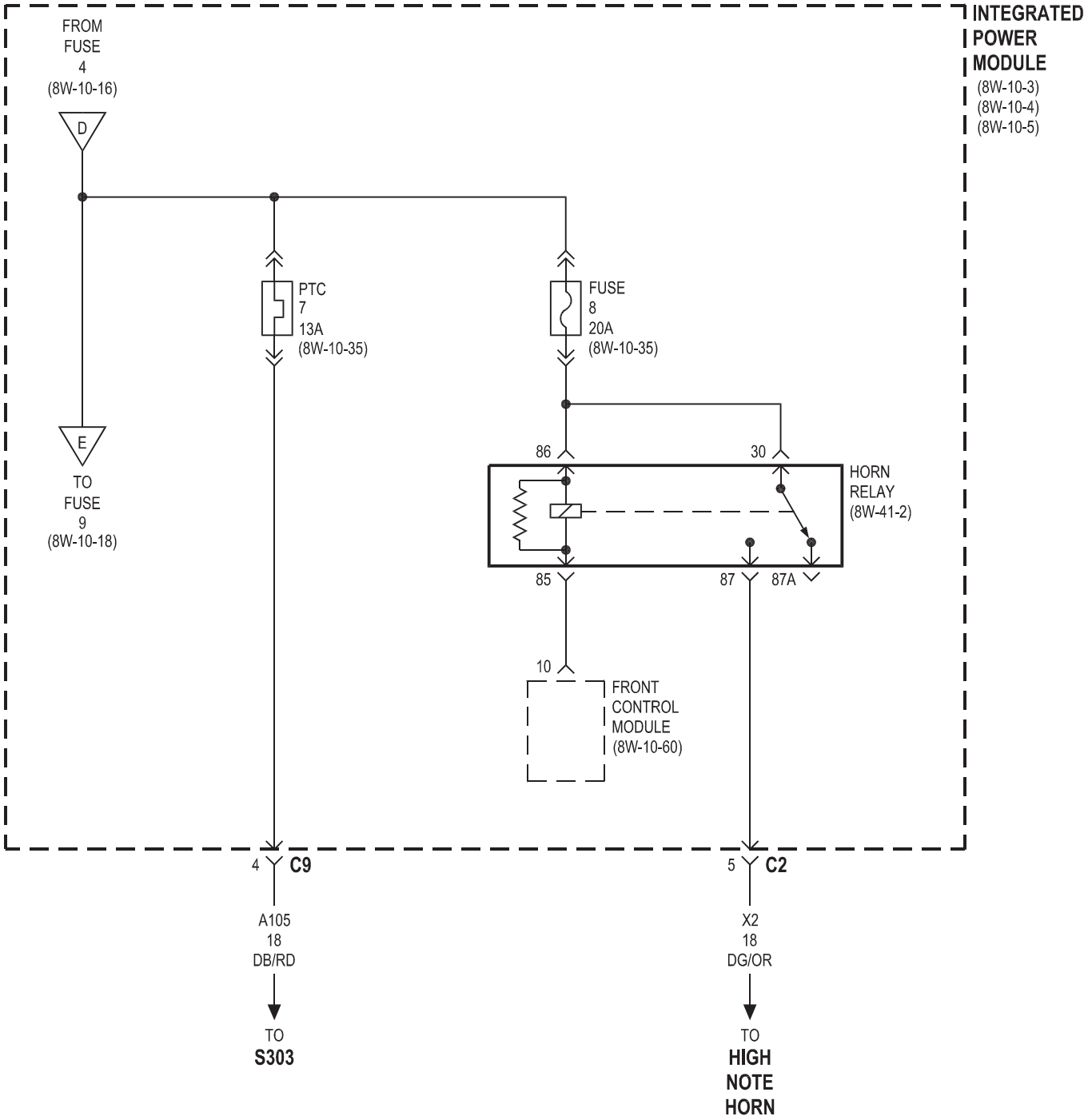
INTEGRATED
POWER
MODULE
(8W-10-3)
(8W-10-4)
(8W-10-5)
FROM
FUSE
4
(8W-10-16)
D
E
TO
FUSE
9
(8W-10-18)
PTC
7
13A
(8W-10-35)
FUSE
8
20A
(8W-10-35)
86
30
HORN
RELAY
(8W-41-2)
85
87
87A
10
FRONT
CONTROL
MODULE
(8W-10-60)
4 C9
A105
18
DB/RD
TO
S303
5 C2
X2
18
DG/OR
TO
HIGH
NOTE
HORN

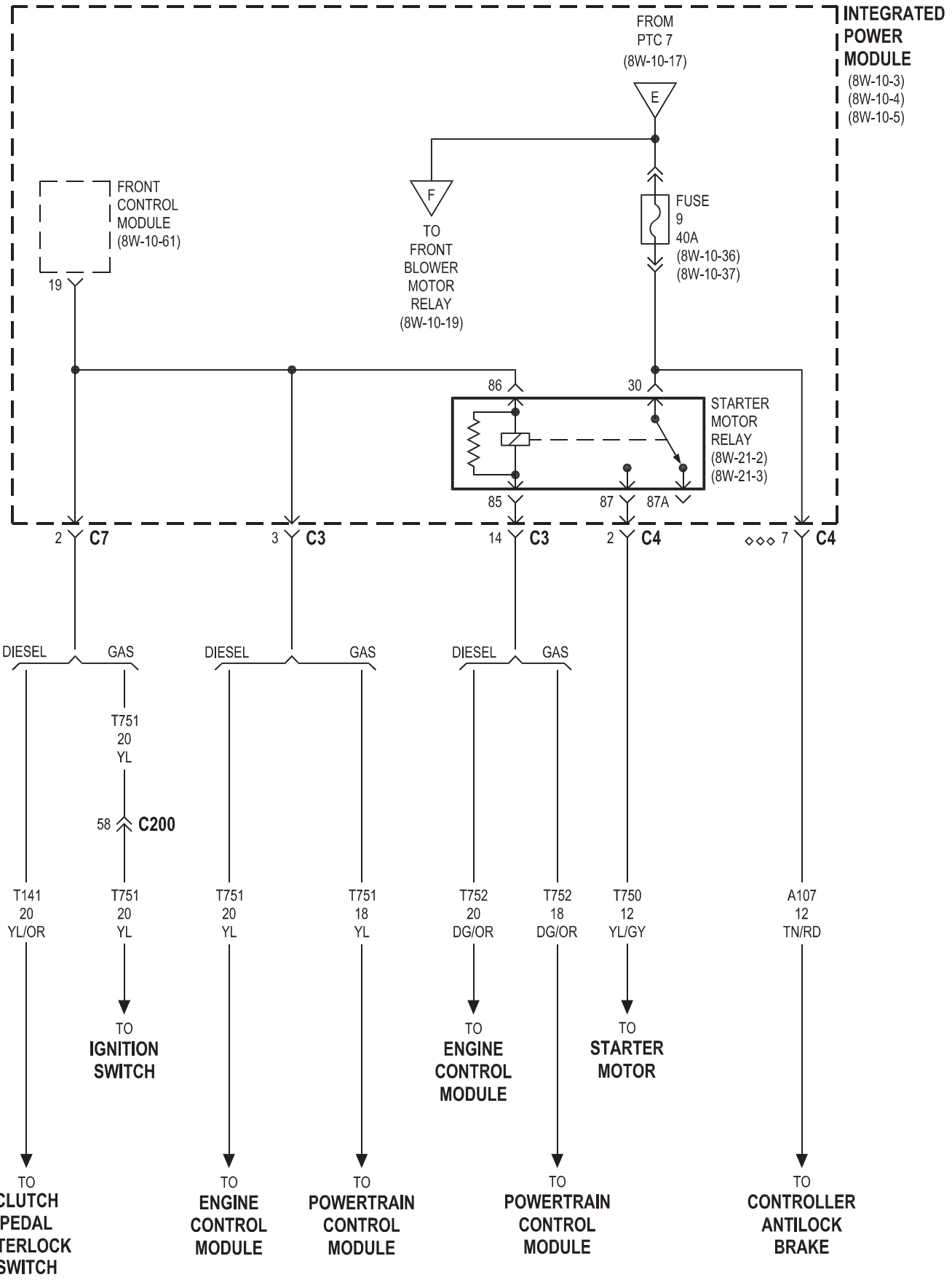
INTEGRATED POWER MODULE
(8W-10-3)
(8W-10-4)
(8W-10-5)
FROM PTC 7
(8W-10-17)
E
F
TO FRONT BLOWER MOTOR RELAY
(8W-10-19)
FUSE 9 40A
(8W-10-36)
(8W-10-37)
FRONT CONTROL MODULE
(8W-10-61)
19
86
30
STARTER MOTOR RELAY
(8W-21-2)
(8W-21-3)
85
87
87A
2 C7
3 C3
14 C3
2 C4
◇◇◇ 7 C4
DIESEL
GAS
T751 20 YL
58 C200
T141 20 YL/OR
T751 20 YL
T751 20 YL
T751 18 YL
T752 20 DG/OR
T752 18 DG/OR
T750 12 YL/GY
A107 12 TN/RD
TO IGNITION SWITCH
TO ENGINE CONTROL MODULE
TO STARTER MOTOR
TO CLUTCH PEDAL INTERLOCK SWITCH
TO ENGINE CONTROL MODULE
TO POWERTRAIN CONTROL MODULE
TO POWERTRAIN CONTROL MODULE
TO CONTROLLER ANTILOCK BRAKE
◇◇◇ ABS

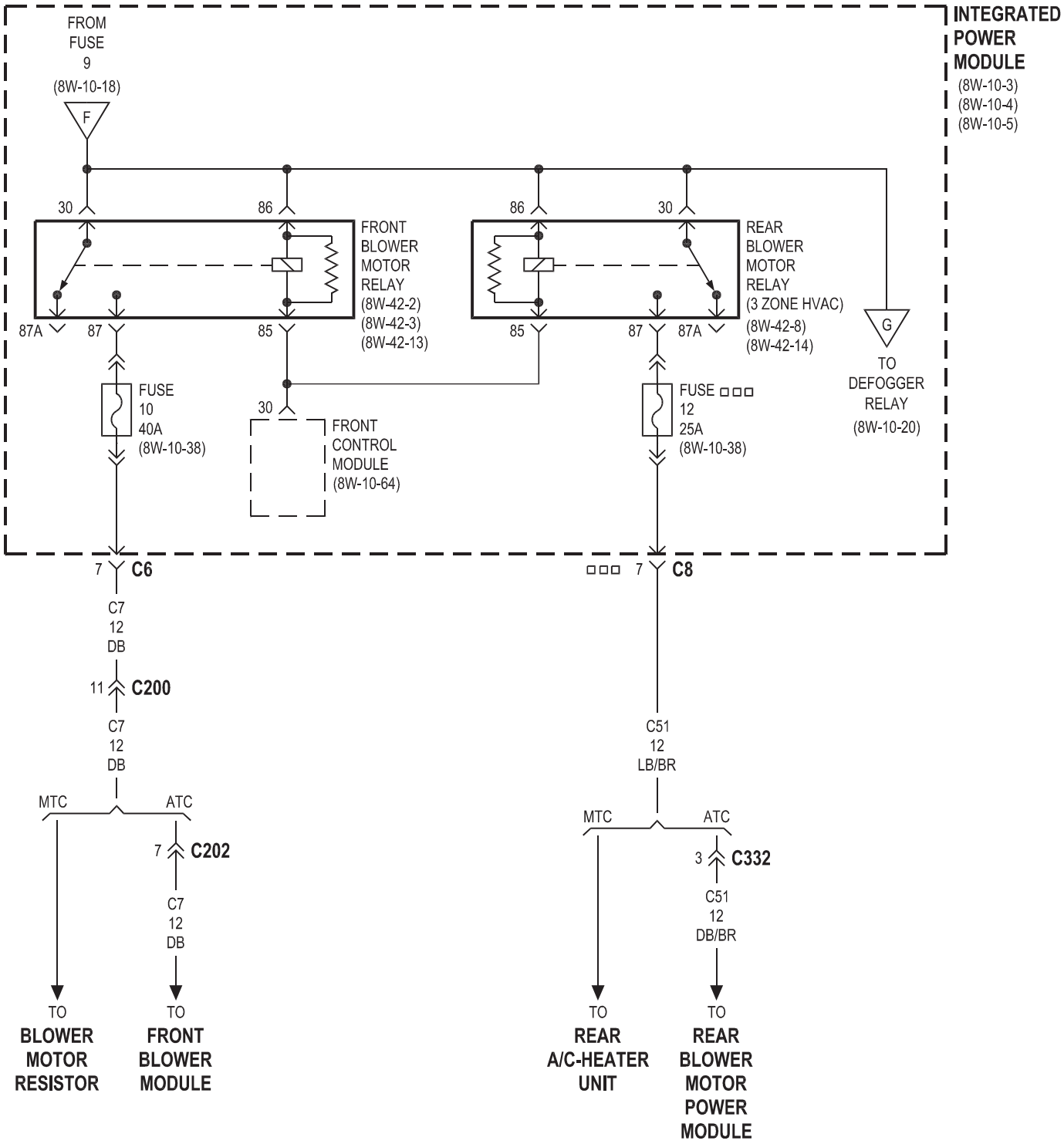
INTEGRATED POWER MODULE
(8W-10-3)
(8W-10-4)
(8W-10-5)
FROM FUSE 9
(8W-10-18)
F
30
86
86
30
FRONT BLOWER MOTOR RELAY
(8W-42-2)
(8W-42-3)
(8W-42-13)
REAR BLOWER MOTOR RELAY
(3 ZONE HVAC)
(8W-42-8)
(8W-42-14)
87A
87
85
85
87
87A
G
TO DEFOGGER RELAY
(8W-10-20)
FUSE 10 40A
(8W-10-38)
30
FRONT CONTROL MODULE
(8W-10-64)
FUSE □□□ 12 25A
(8W-10-38)
7 C6
□□□ 7 C8
C7 12 DB
11 C200
C7 12 DB
C51 12 LB/BR
MTC
ATC
MTC
ATC
7 C202
3 C332
C7 12 DB
C51 12 DB/BR
TO BLOWER MOTOR RESISTOR
TO FRONT BLOWER MODULE
TO REAR A/C-HEATER UNIT
TO REAR BLOWER MOTOR POWER MODULE

□□□ 3 ZONE HVAC

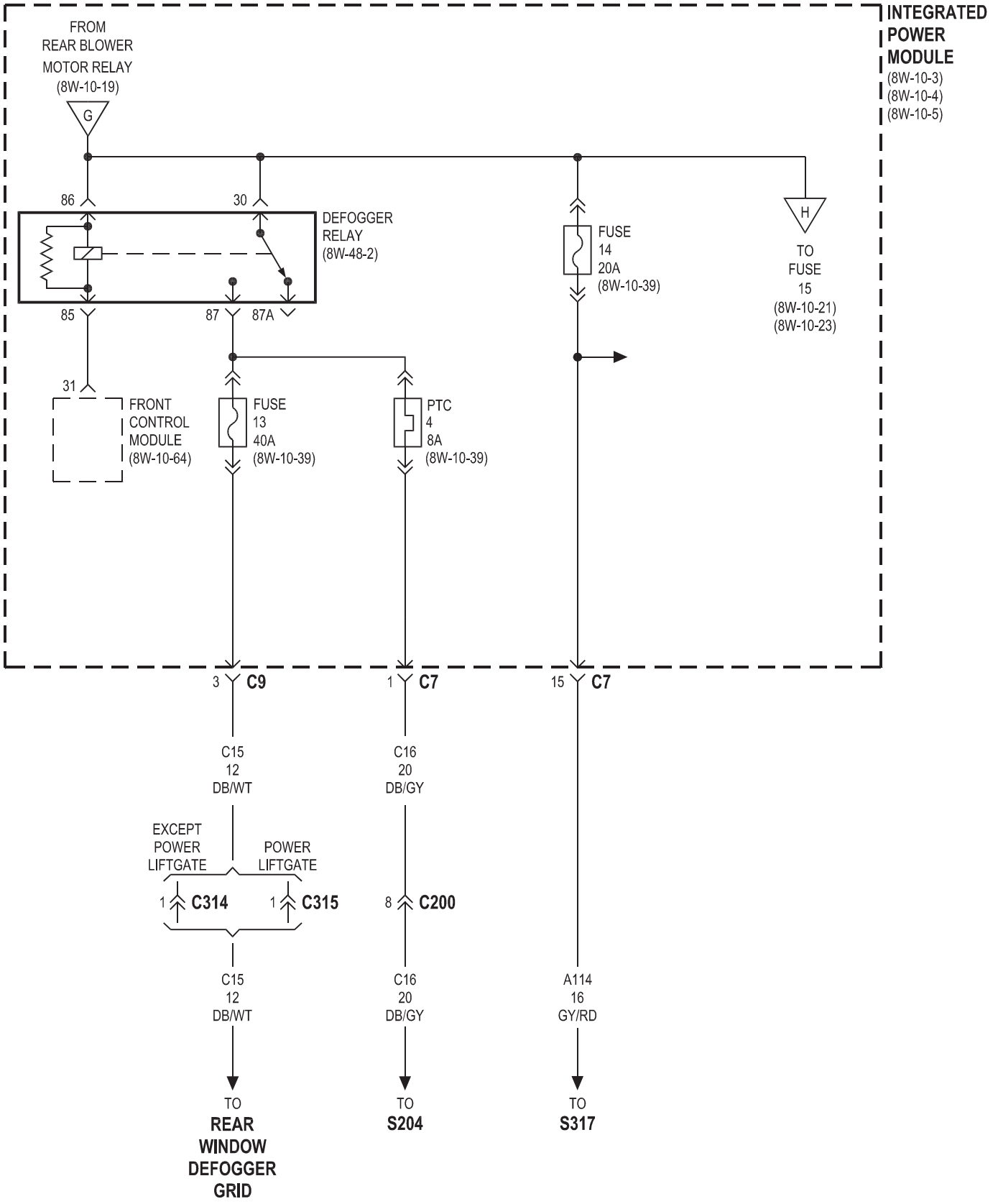
INTEGRATED POWER MODULE
(8W-10-3)
(8W-10-4)
(8W-10-5)
FROM REAR BLOWER MOTOR RELAY (8W-10-19)
G
86
30
DEFOGGER RELAY (8W-48-2)
85
87
87A
31
FRONT CONTROL MODULE (8W-10-64)
FUSE 13 40A (8W-10-39)
PTC 4 8A (8W-10-39)
FUSE 14 20A (8W-10-39)
H
TO FUSE 15 (8W-10-21) (8W-10-23)
3 C9
1 C7
15 C7
C15 12 DB/WT
C16 20 DB/GY
EXCEPT POWER LIFTGATE
POWER LIFTGATE
1 C314
1 C315
8 C200
C15 12 DB/WT
C16 20 DB/GY
A114 16 GY/RD
TO REAR WINDOW DEFOGGER GRID
TO S204
TO S317

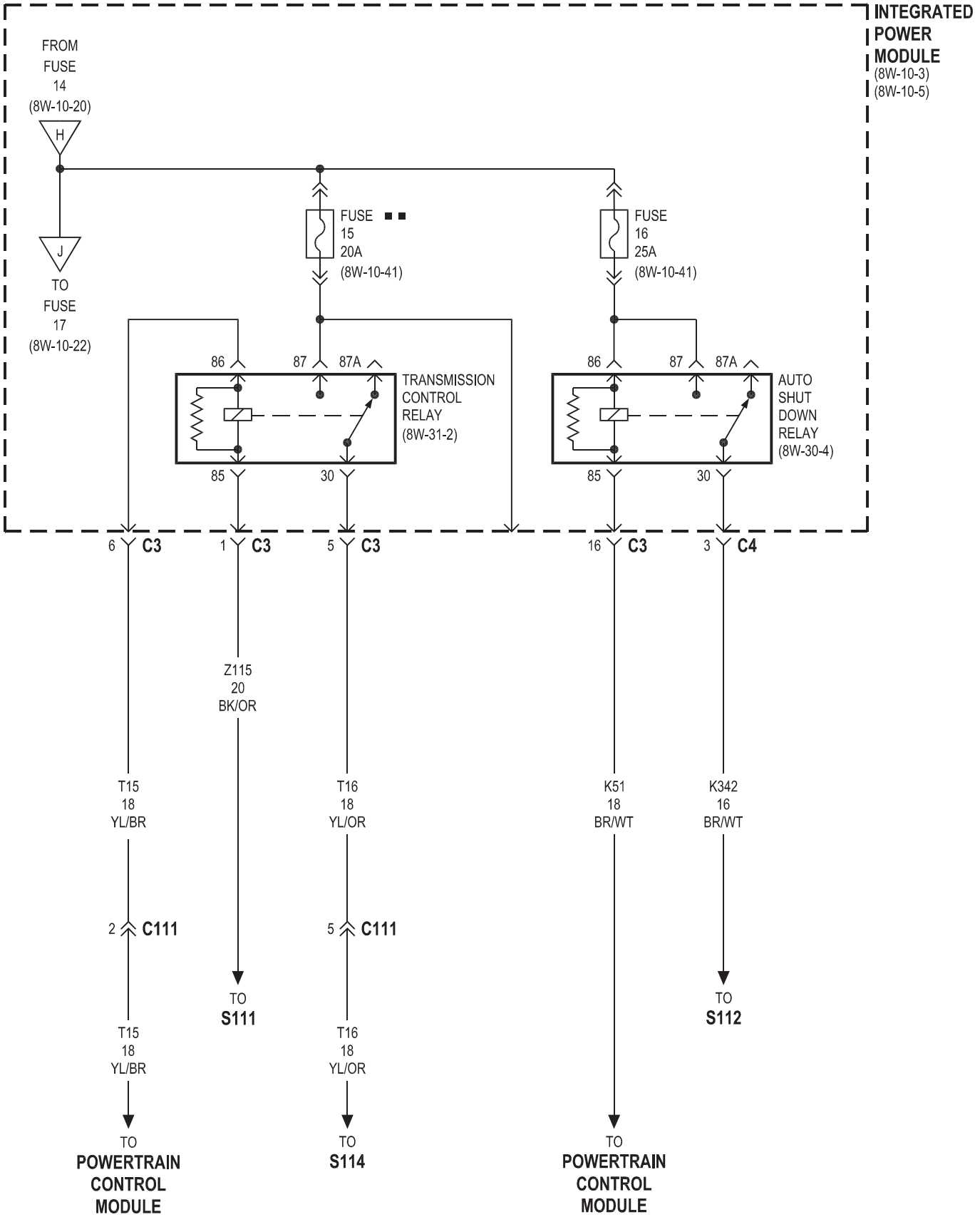
INTEGRATED POWER MODULE
(8W-10-3)
(8W-10-5)
FROM FUSE 14
(8W-10-20)
H
J
TO FUSE 17
(8W-10-22)
FUSE 15 ■ ■
20A
(8W-10-41)
FUSE 16
25A
(8W-10-41)
86
87
87A
85
30
TRANSMISSION CONTROL RELAY
(8W-31-2)
AUTO SHUT DOWN RELAY
(8W-30-4)
6 C3
1 C3
5 C3
16 C3
3 C4
Z115
20
BK/OR
T15
18
YL/BR
T16
18
YL/OR
K51
18
BR/WT
K342
16
BR/WT
2 C111
5 C111
TO S111
TO S112
T15
18
YL/BR
T16
18
YL/OR
TO POWERTRAIN CONTROL MODULE
TO S114
TO POWERTRAIN CONTROL MODULE

■ ■ EATX

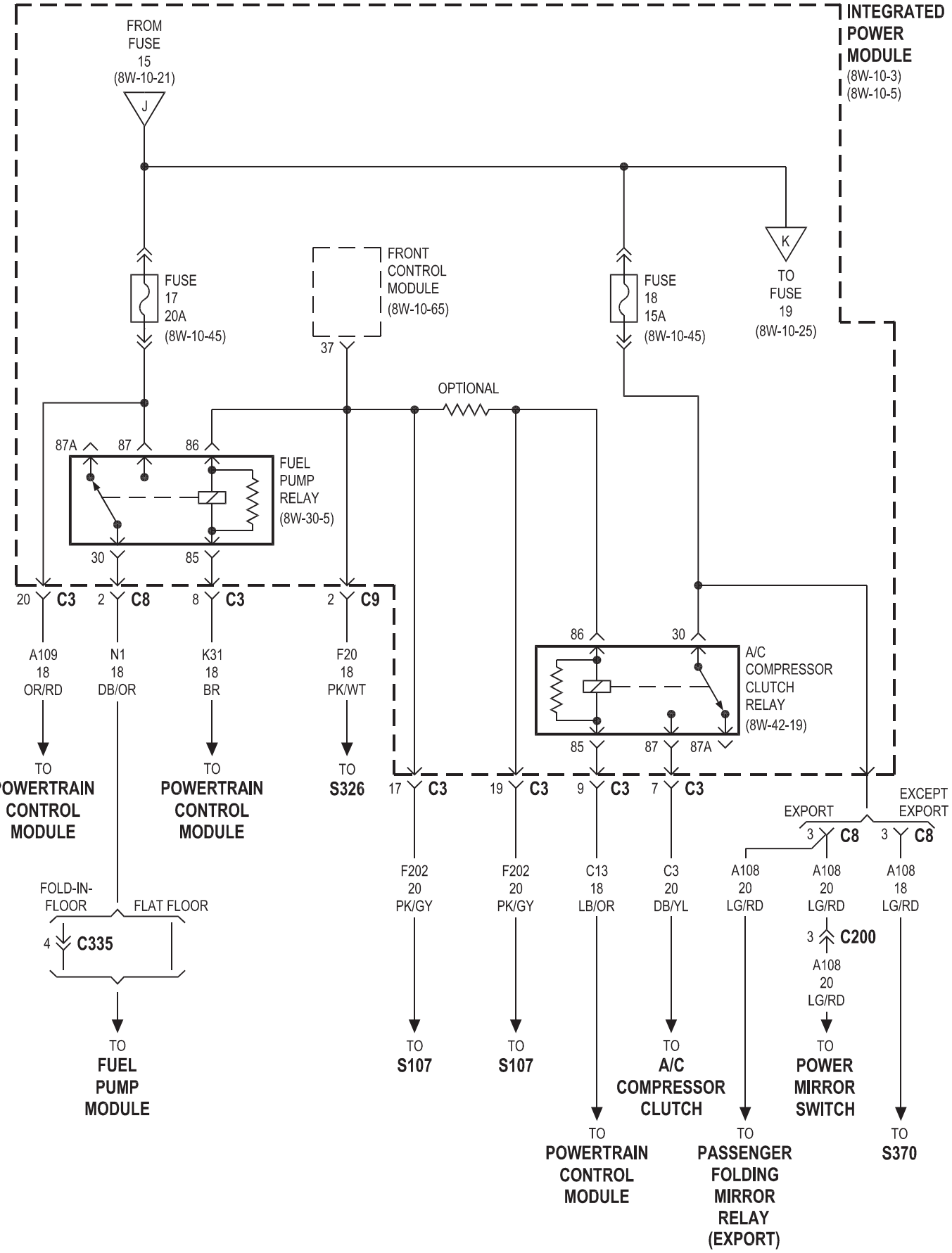
INTEGRATED POWER MODULE
(8W-10-3)
(8W-10-5)
FROM FUSE 15
(8W-10-21)
J
FUSE 17 20A
(8W-10-45)
FRONT CONTROL MODULE
(8W-10-65)
37
FUSE 18 15A
(8W-10-45)
K
TO FUSE 19
(8W-10-25)
OPTIONAL
87A
87
86
FUEL PUMP RELAY
(8W-30-5)
30
85
20 C3
2 C8
8 C3
2 C9
A109 18 OR/RD
N1 18 DB/OR
K31 18 BR
F20 18 PK/WT
TO POWERTRAIN CONTROL MODULE
TO POWERTRAIN CONTROL MODULE
TO S326
86
30
A/C COMPRESSOR CLUTCH RELAY
(8W-42-19)
85
87
87A
17 C3
19 C3
9 C3
7 C3
EXPORT
EXCEPT EXPORT
3 C8
3 C8
F202 20 PK/GY
F202 20 PK/GY
C13 18 LB/OR
C3 20 DB/YL
A108 20 LG/RD
A108 20 LG/RD
A108 18 LG/RD
FOLD-IN-FLOOR
FLAT FLOOR
4 C335
3 C200
A108 20 LG/RD
TO FUEL PUMP MODULE
TO S107
TO S107
TO A/C COMPRESSOR CLUTCH
TO POWER MIRROR SWITCH
TO POWERTRAIN CONTROL MODULE
TO PASSENGER FOLDING MIRROR RELAY (EXPORT)
TO S370

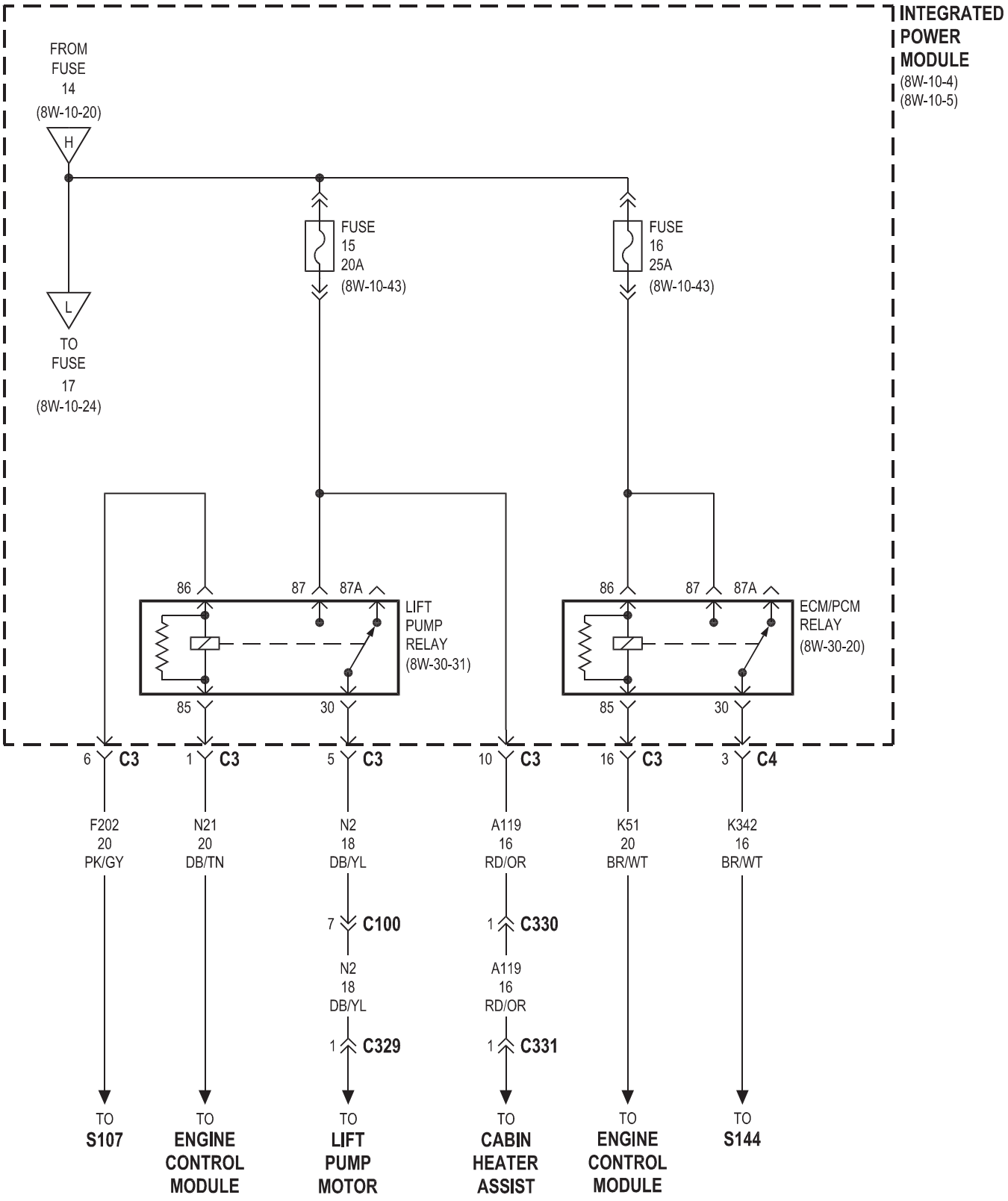
INTEGRATED POWER MODULE
(8W-10-4)
(8W-10-5)
FROM FUSE 14
(8W-10-20)
H
L
TO FUSE 17
(8W-10-24)
FUSE 15 20A
(8W-10-43)
FUSE 16 25A
(8W-10-43)
86
87
87A
85
30
LIFT PUMP RELAY
(8W-30-31)
ECM/PCM RELAY
(8W-30-20)
6 C3
1 C3
5 C3
10 C3
16 C3
3 C4
F202 20 PK/GY
N21 20 DB/TN
N2 18 DB/YL
7 C100
N2 18 DB/YL
1 C329
A119 16 RD/OR
1 C330
A119 16 RD/OR
1 C331
K51 20 BR/WT
K342 16 BR/WT
TO S107
TO ENGINE CONTROL MODULE
TO LIFT PUMP MOTOR
TO CABIN HEATER ASSIST
TO ENGINE CONTROL MODULE
TO S144

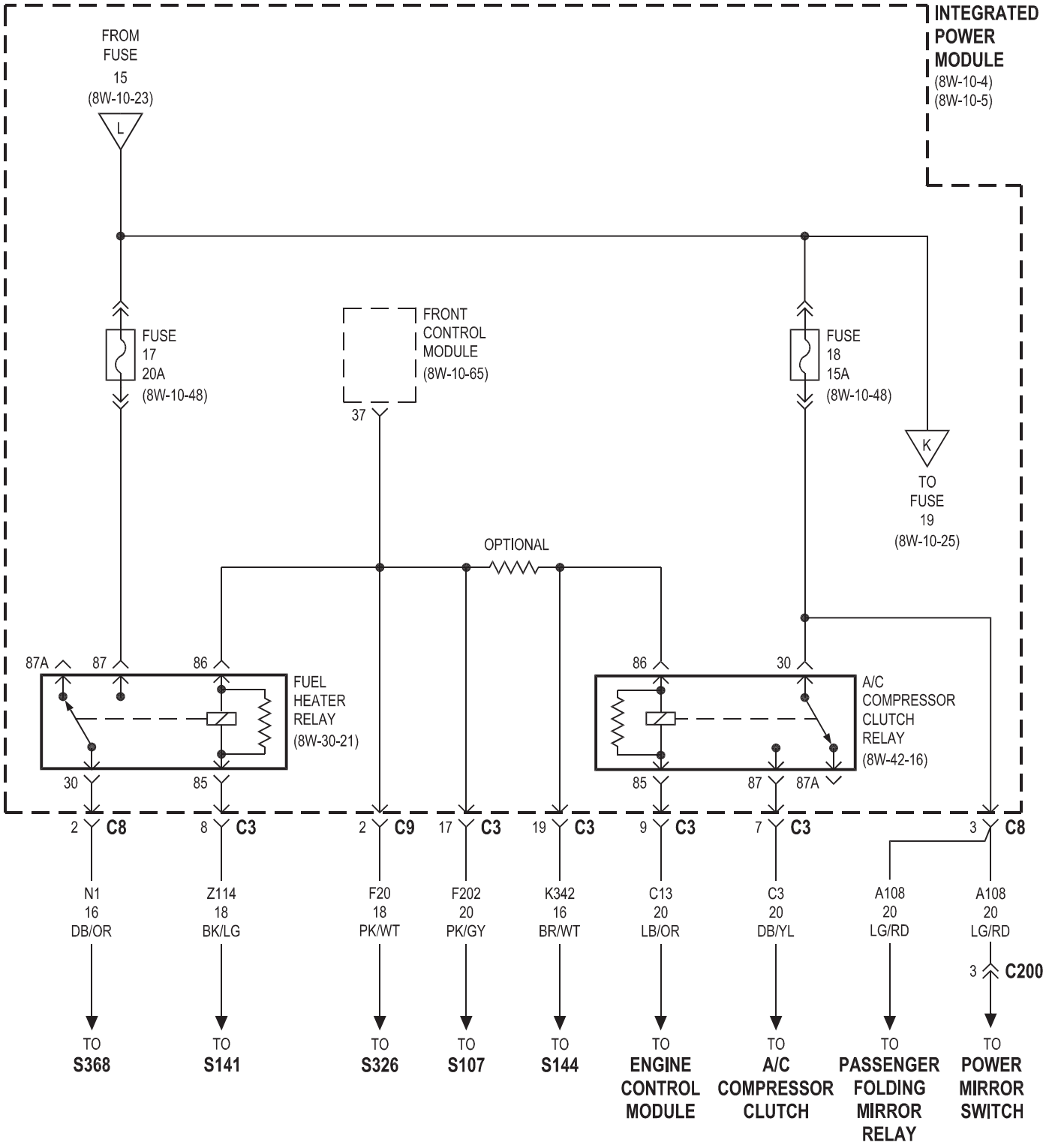
INTEGRATED POWER MODULE
(8W-10-4)
(8W-10-5)
FROM FUSE 15
(8W-10-23)
L
FUSE 17 20A
(8W-10-48)
FRONT CONTROL MODULE
(8W-10-65)
37
FUSE 18 15A
(8W-10-48)
K
TO FUSE 19
(8W-10-25)
OPTIONAL
87A
87
86
FUEL HEATER RELAY
(8W-30-21)
30
85
86
30
A/C COMPRESSOR CLUTCH RELAY
(8W-42-16)
85
87
87A
2 C8
8 C3
2 C9
17 C3
19 C3
9 C3
7 C3
3 C8
N1 16 DB/OR
Z114 18 BK/LG
F20 18 PK/WT
F202 20 PK/GY
K342 16 BR/WT
C13 20 LB/OR
C3 20 DB/YL
A108 20 LG/RD
A108 20 LG/RD
3 C200
TO S368
TO S141
TO S326
TO S107
TO S144
TO ENGINE CONTROL MODULE
TO A/C COMPRESSOR CLUTCH
TO PASSENGER FOLDING MIRROR RELAY
TO POWER MIRROR SWITCH

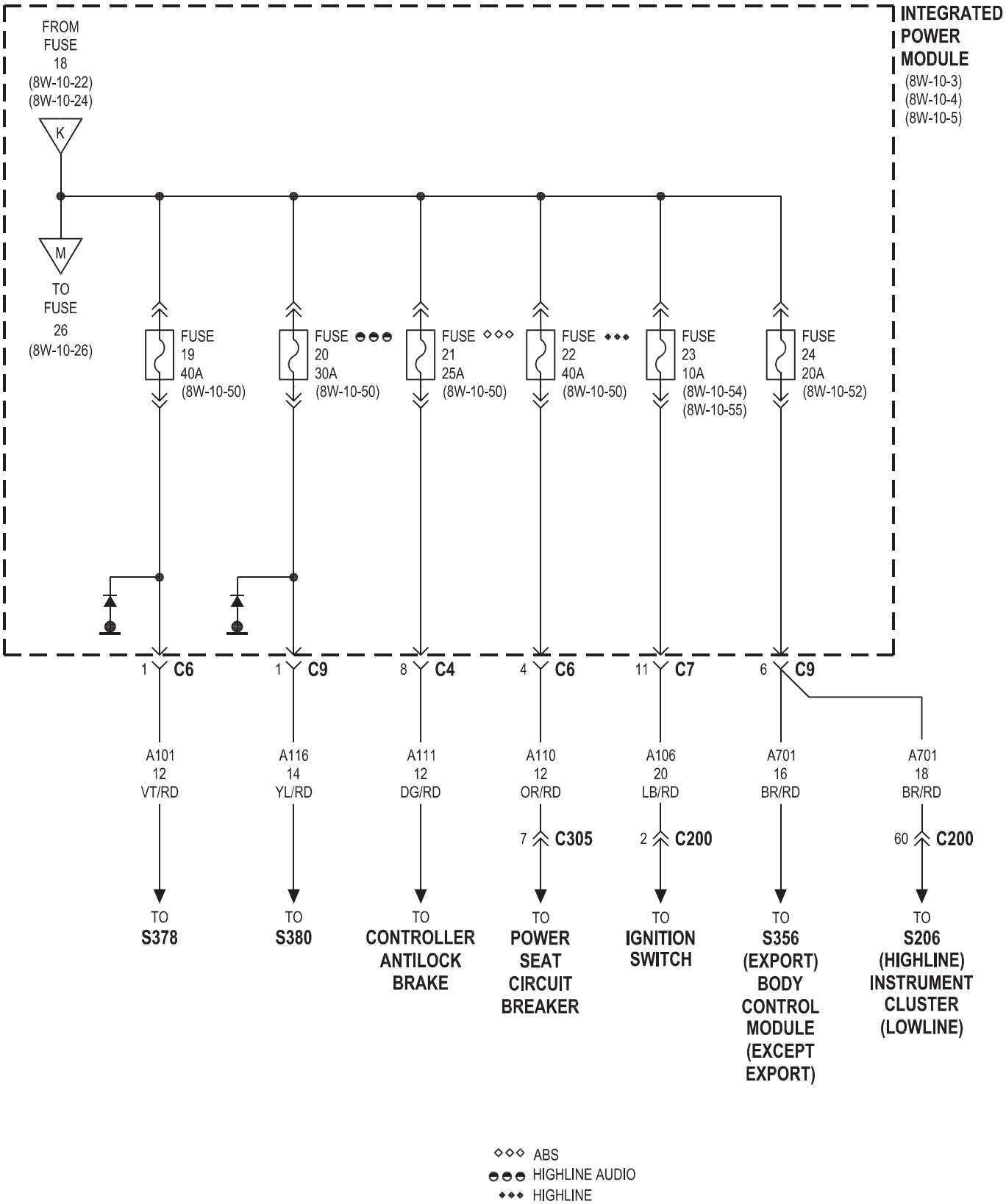
INTEGRATED POWER MODULE
(8W-10-3)
(8W-10-4)
(8W-10-5)
FROM FUSE 18
(8W-10-22)
(8W-10-24)
K
M
TO FUSE 26
(8W-10-26)
FUSE 19 40A (8W-10-50)
FUSE 20 30A (8W-10-50)
FUSE 21 25A (8W-10-50)
FUSE 22 40A (8W-10-50)
FUSE 23 10A (8W-10-54) (8W-10-55)
FUSE 24 20A (8W-10-52)
1 C6
1 C9
8 C4
4 C6
11 C7
6 C9
A101 12 VT/RD
A116 14 YL/RD
A111 12 DG/RD
A110 12 OR/RD
A106 20 LB/RD
A701 16 BR/RD
A701 18 BR/RD
7 C305
2 C200
60 C200
TO S378
TO S380
TO CONTROLLER ANTILOCK BRAKE
TO POWER SEAT CIRCUIT BREAKER
TO IGNITION SWITCH
TO S356 (EXPORT) BODY CONTROL MODULE (EXCEPT EXPORT)
TO S206 (HIGHLINE) INSTRUMENT CLUSTER (LOWLINE)
◇◇◇ ABS
HIGHLINE AUDIO
◆◆◆ HIGHLINE

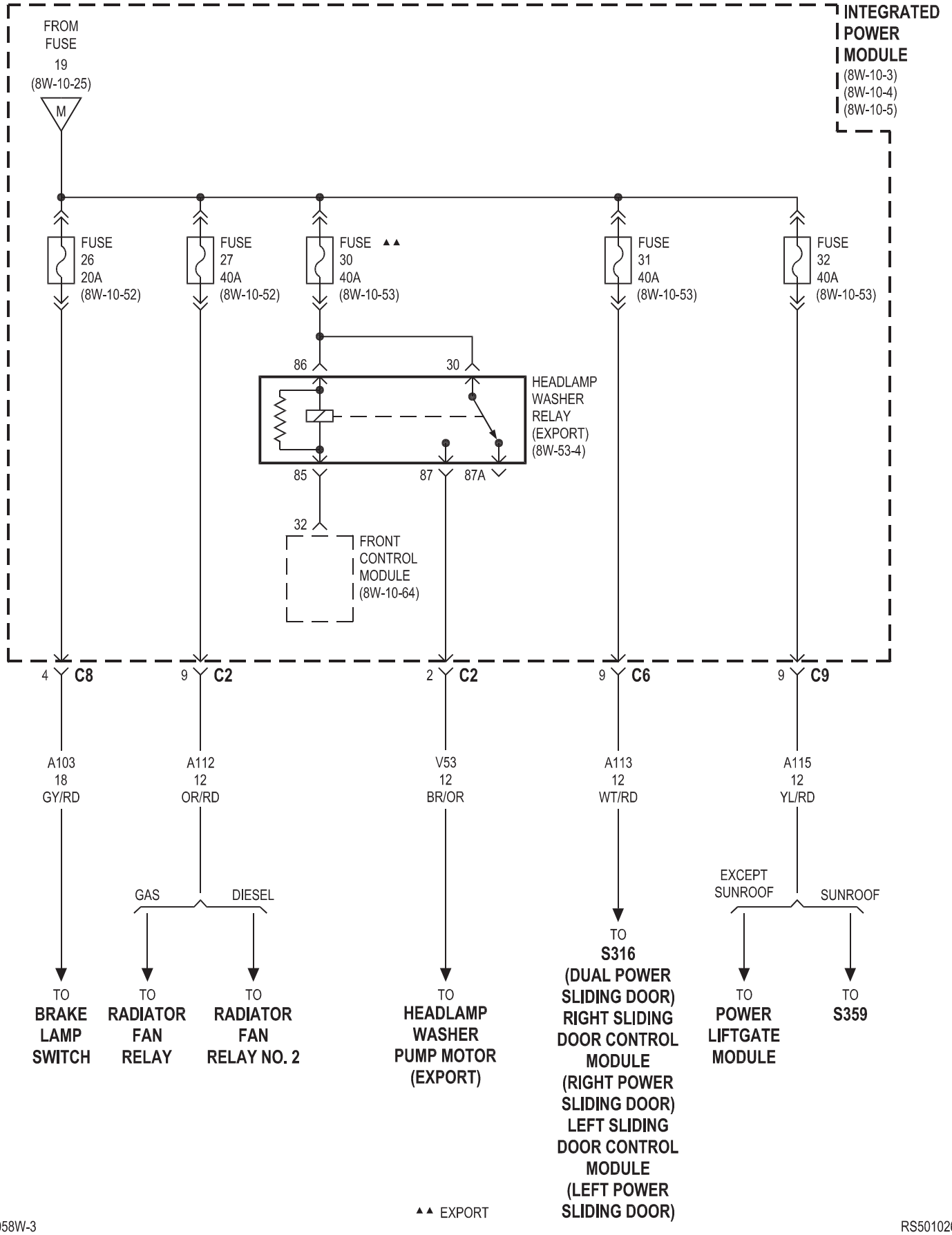
INTEGRATED POWER MODULE
(8W-10-3)
(8W-10-4)
(8W-10-5)
FROM FUSE 19 (8W-10-25)
M
FUSE 26 20A (8W-10-52)
FUSE 27 40A (8W-10-52)
FUSE ▲▲ 30 40A (8W-10-53)
FUSE 31 40A (8W-10-53)
FUSE 32 40A (8W-10-53)
86
30
HEADLAMP WASHER RELAY (EXPORT) (8W-53-4)
85
87
87A
32
FRONT CONTROL MODULE (8W-10-64)
4 C8
9 C2
2 C2
9 C6
9 C9
A103 18 GY/RD
A112 12 OR/RD
V53 12 BR/OR
A113 12 WT/RD
A115 12 YL/RD
GAS
DIESEL
EXCEPT SUNROOF
SUNROOF
TO BRAKE LAMP SWITCH
TO RADIATOR FAN RELAY
TO RADIATOR FAN RELAY NO. 2
TO HEADLAMP WASHER PUMP MOTOR (EXPORT)
TO S316 (DUAL POWER SLIDING DOOR) RIGHT SLIDING DOOR CONTROL MODULE (RIGHT POWER SLIDING DOOR) LEFT SLIDING DOOR CONTROL MODULE (LEFT POWER SLIDING DOOR)
TO POWER LIFTGATE MODULE
TO S359
▲▲ EXPORT

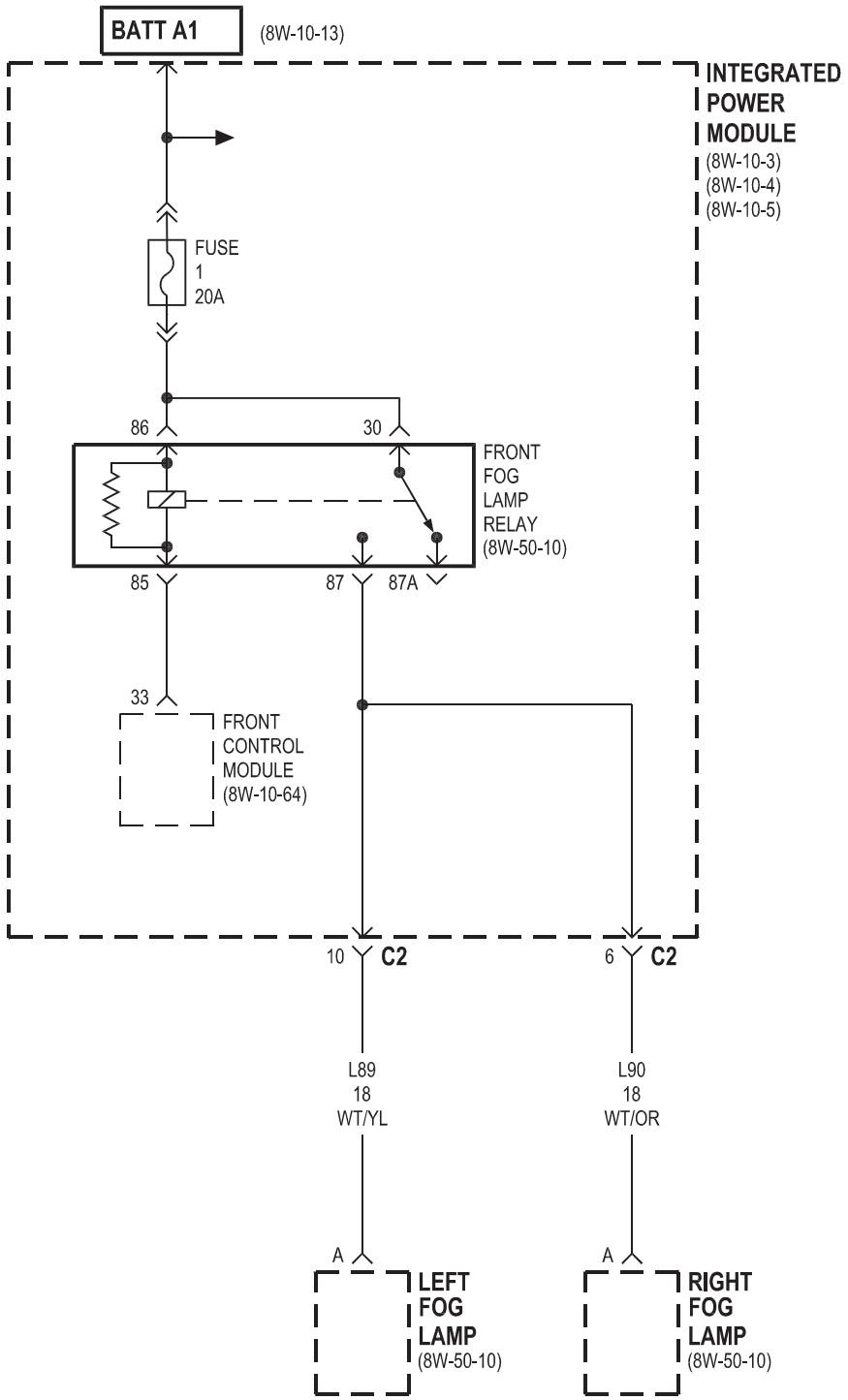
BATT A1
(8W-10-13)
INTEGRATED
POWER
MODULE
(8W-10-3)
(8W-10-4)
(8W-10-5)
FUSE
1
20A
86
30
FRONT
FOG
LAMP
RELAY
(8W-50-10)
85
87
87A
33
FRONT
CONTROL
MODULE
(8W-10-64)
10
C2
6
C2
L89
18
WT/YL
L90
18
WT/OR
A
A
LEFT
FOG
LAMP
(8W-50-10)
RIGHT
FOG
LAMP
(8W-50-10)

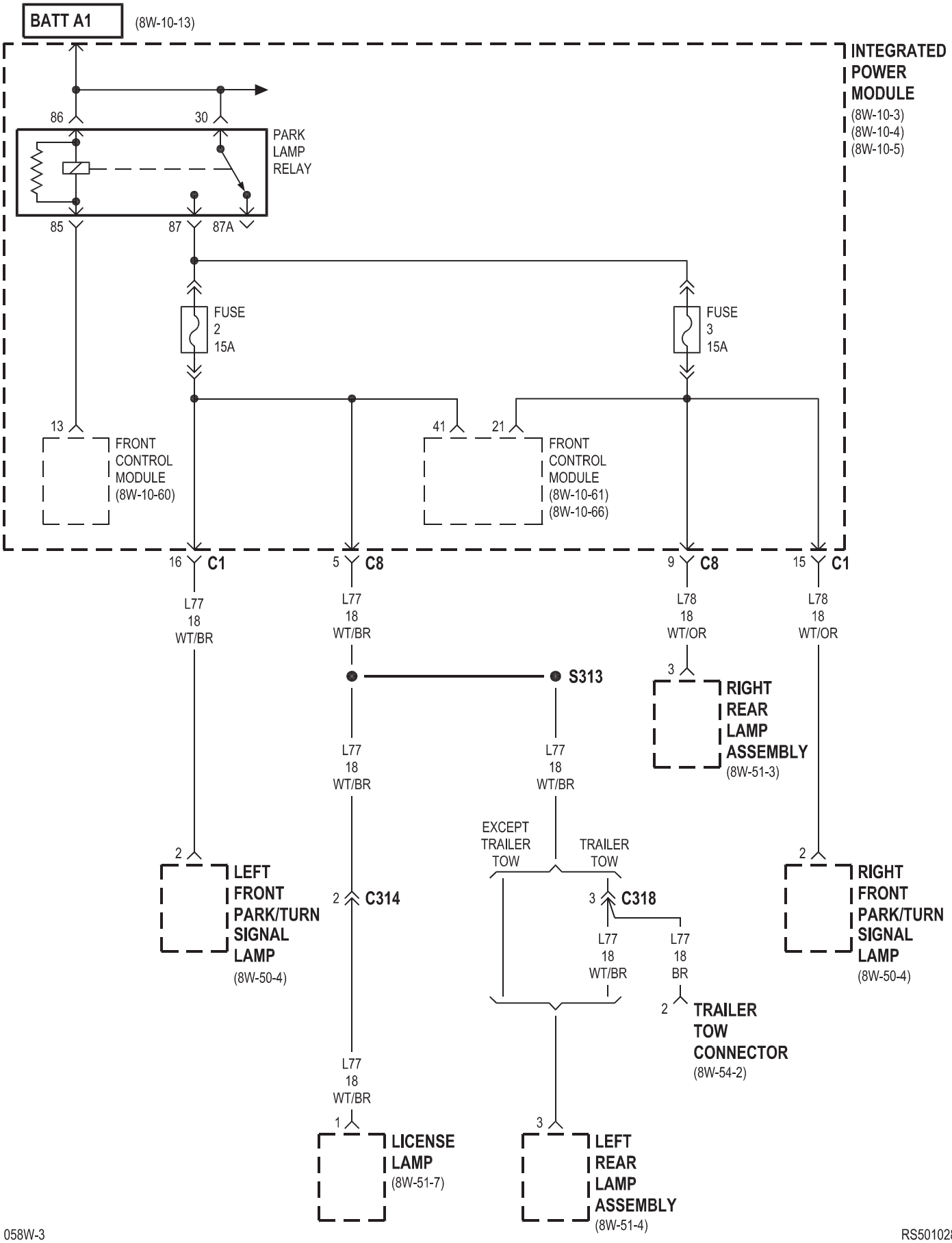
BATT A1
(8W-10-13)
INTEGRATED POWER MODULE
(8W-10-3)
(8W-10-4)
(8W-10-5)
86
30
PARK LAMP RELAY
85
87
87A
FUSE 2 15A
FUSE 3 15A
13
FRONT CONTROL MODULE
(8W-10-60)
41
21
FRONT CONTROL MODULE
(8W-10-61)
(8W-10-66)
16 C1
5 C8
9 C8
15 C1
L77 18 WT/BR
L77 18 WT/BR
L78 18 WT/OR
L78 18 WT/OR
S313
3
RIGHT REAR LAMP ASSEMBLY
(8W-51-3)
L77 18 WT/BR
L77 18 WT/BR
EXCEPT TRAILER TOW
TRAILER TOW
2
LEFT FRONT PARK/TURN SIGNAL LAMP
(8W-50-4)
2 C314
3 C318
2
RIGHT FRONT PARK/TURN SIGNAL LAMP
(8W-50-4)
L77 18 WT/BR
L77 18 BR
2
TRAILER TOW CONNECTOR
(8W-54-2)
L77 18 WT/BR
1
LICENSE LAMP
(8W-51-7)
3
LEFT REAR LAMP ASSEMBLY
(8W-51-4)

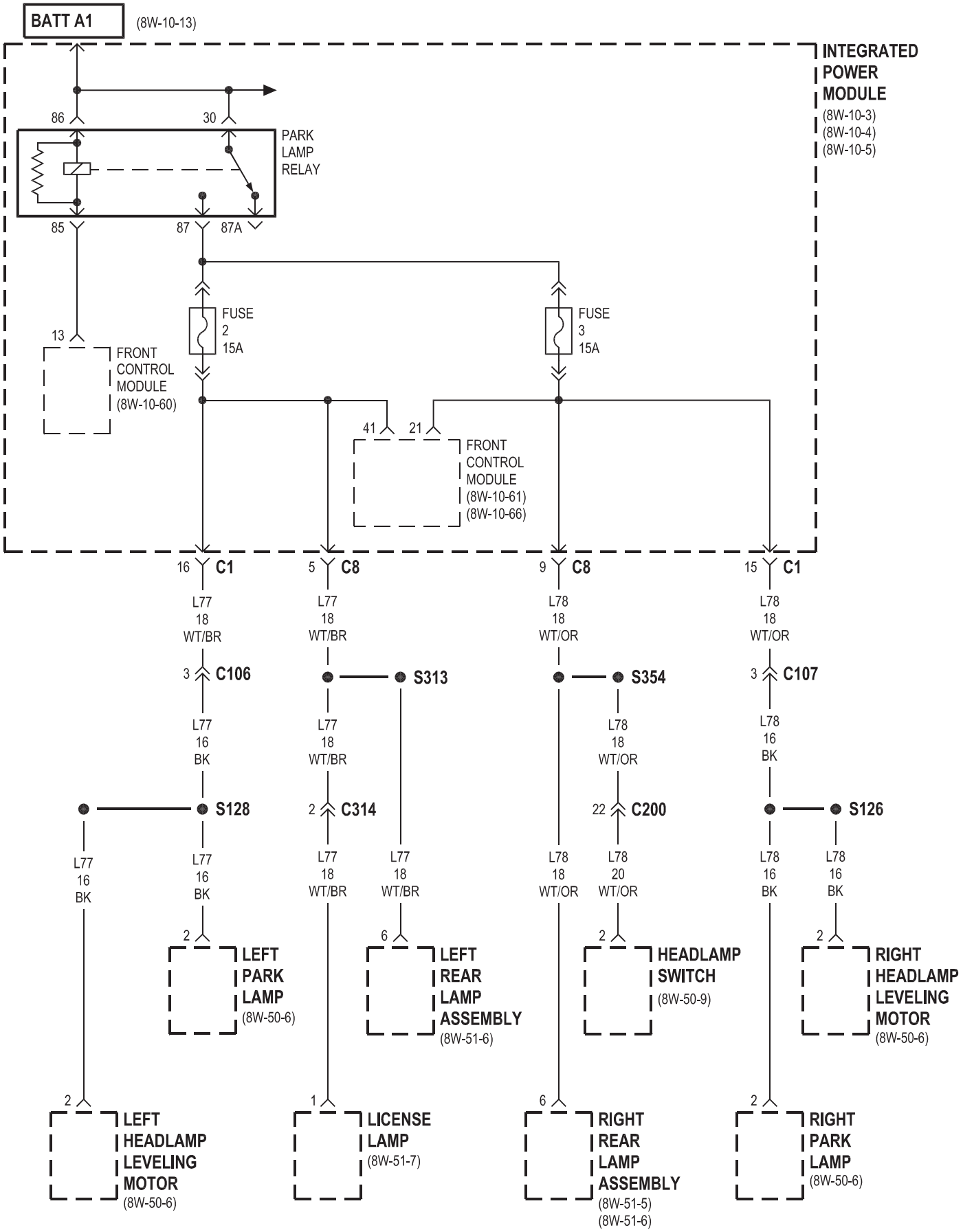
BATT A1
(8W-10-13)
INTEGRATED POWER MODULE
(8W-10-3)
(8W-10-4)
(8W-10-5)
86
30
PARK LAMP RELAY
85
87
87A
FUSE 2 15A
FUSE 3 15A
13
FRONT CONTROL MODULE
(8W-10-60)
41
21
FRONT CONTROL MODULE
(8W-10-61)
(8W-10-66)
16 C1
5 C8
9 C8
15 C1
L77 18 WT/BR
L77 18 WT/BR
L78 18 WT/OR
L78 18 WT/OR
3 C106
S313
S354
3 C107
L77 16 BK
L77 18 WT/BR
L78 18 WT/OR
L78 16 BK
S128
2 C314
22 C200
S126
L77 16 BK
L77 16 BK
L77 18 WT/BR
L77 18 WT/BR
L78 18 WT/OR
L78 20 WT/OR
L78 16 BK
L78 16 BK
2
LEFT PARK LAMP
(8W-50-6)
6
LEFT REAR LAMP ASSEMBLY
(8W-51-6)
2
HEADLAMP SWITCH
(8W-50-9)
2
RIGHT HEADLAMP LEVELING MOTOR
(8W-50-6)
2
LEFT HEADLAMP LEVELING MOTOR
(8W-50-6)
1
LICENSE LAMP
(8W-51-7)
6
RIGHT REAR LAMP ASSEMBLY
(8W-51-5)
(8W-51-6)
2
RIGHT PARK LAMP
(8W-50-6)

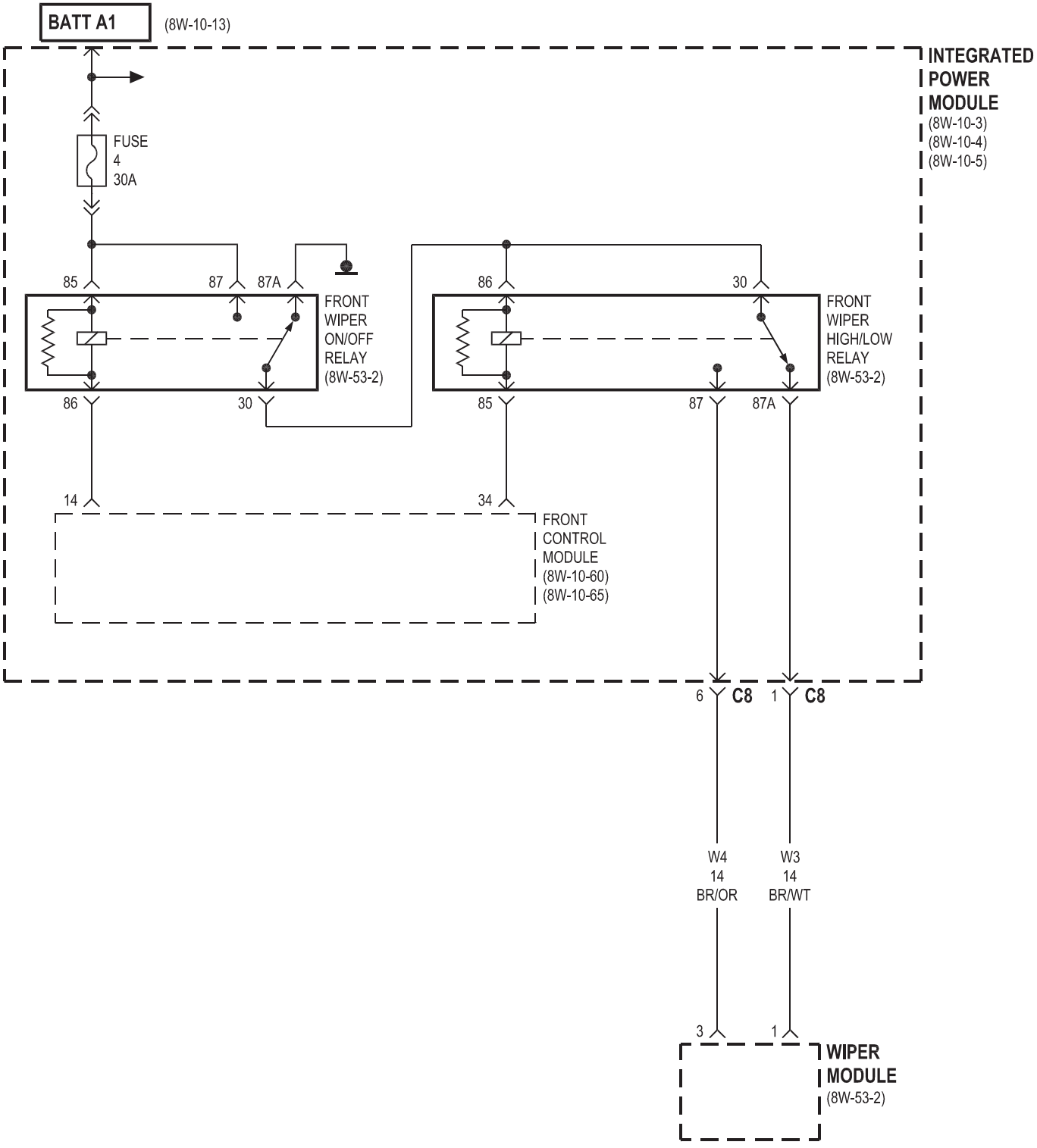
BATT A1
(8W-10-13)
INTEGRATED POWER MODULE
(8W-10-3)
(8W-10-4)
(8W-10-5)
FUSE
4
30A
85
87
87A
FRONT WIPER ON/OFF RELAY
(8W-53-2)
86
30
FRONT WIPER HIGH/LOW RELAY
(8W-53-2)
86
30
85
87
87A
14
34
FRONT CONTROL MODULE
(8W-10-60)
(8W-10-65)
6 C8
1 C8
W4
14
BR/OR
W3
14
BR/WT
3
1
WIPER MODULE
(8W-53-2)

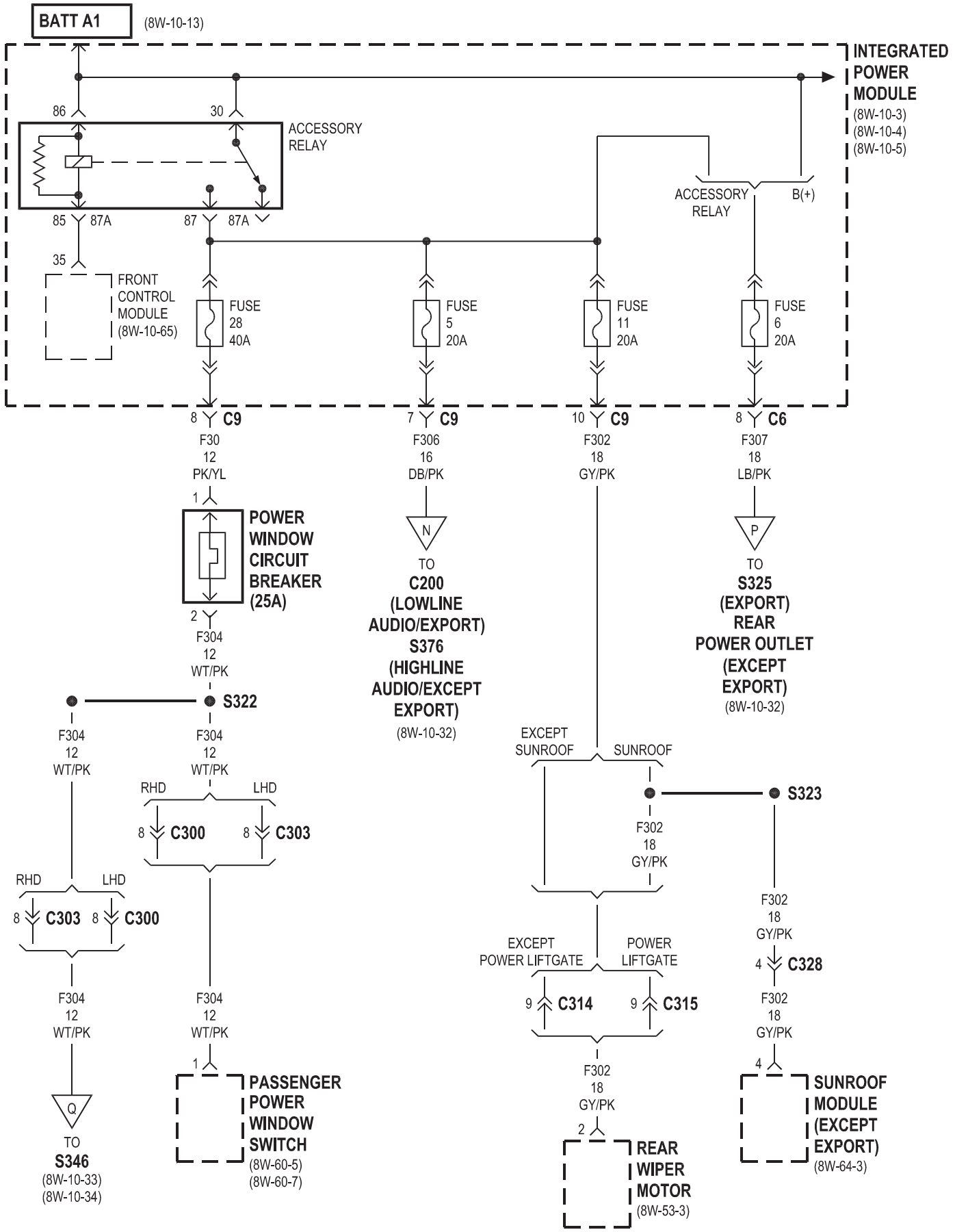
BATT A1
(8W-10-13)
INTEGRATED POWER MODULE
(8W-10-3)
(8W-10-4)
(8W-10-5)
86
30
ACCESSORY RELAY
85
87A
87
87A
35
FRONT CONTROL MODULE
(8W-10-65)
FUSE 28 40A
FUSE 5 20A
FUSE 11 20A
FUSE 6 20A
ACCESSORY RELAY
B(+)
8 C9
F30
12
PK/YL
7 C9
F306
16
DB/PK
10 C9
F302
18
GY/PK
8 C6
F307
18
LB/PK
1
POWER WINDOW CIRCUIT BREAKER (25A)
2
F304
12
WT/PK
N
TO
C200
(LOWLINE AUDIO/EXPORT)
S376
(HIGHLINE AUDIO/EXCEPT EXPORT)
(8W-10-32)
P
TO
S325
(EXPORT)
REAR POWER OUTLET
(EXCEPT EXPORT)
(8W-10-32)
S322
F304
12
WT/PK
F304
12
WT/PK
RHD
LHD
8 C300
8 C303
RHD
LHD
8 C303
8 C300
F304
12
WT/PK
F304
12
WT/PK
Q
TO
S346
(8W-10-33)
(8W-10-34)
1
PASSENGER POWER WINDOW SWITCH
(8W-60-5)
(8W-60-7)
EXCEPT SUNROOF
SUNROOF
S323
F302
18
GY/PK
EXCEPT POWER LIFTGATE
POWER LIFTGATE
9 C314
9 C315
F302
18
GY/PK
2
REAR WIPER MOTOR
(8W-53-3)
F302
18
GY/PK
4 C328
F302
18
GY/PK
4
SUNROOF MODULE (EXCEPT EXPORT)
(8W-64-3)

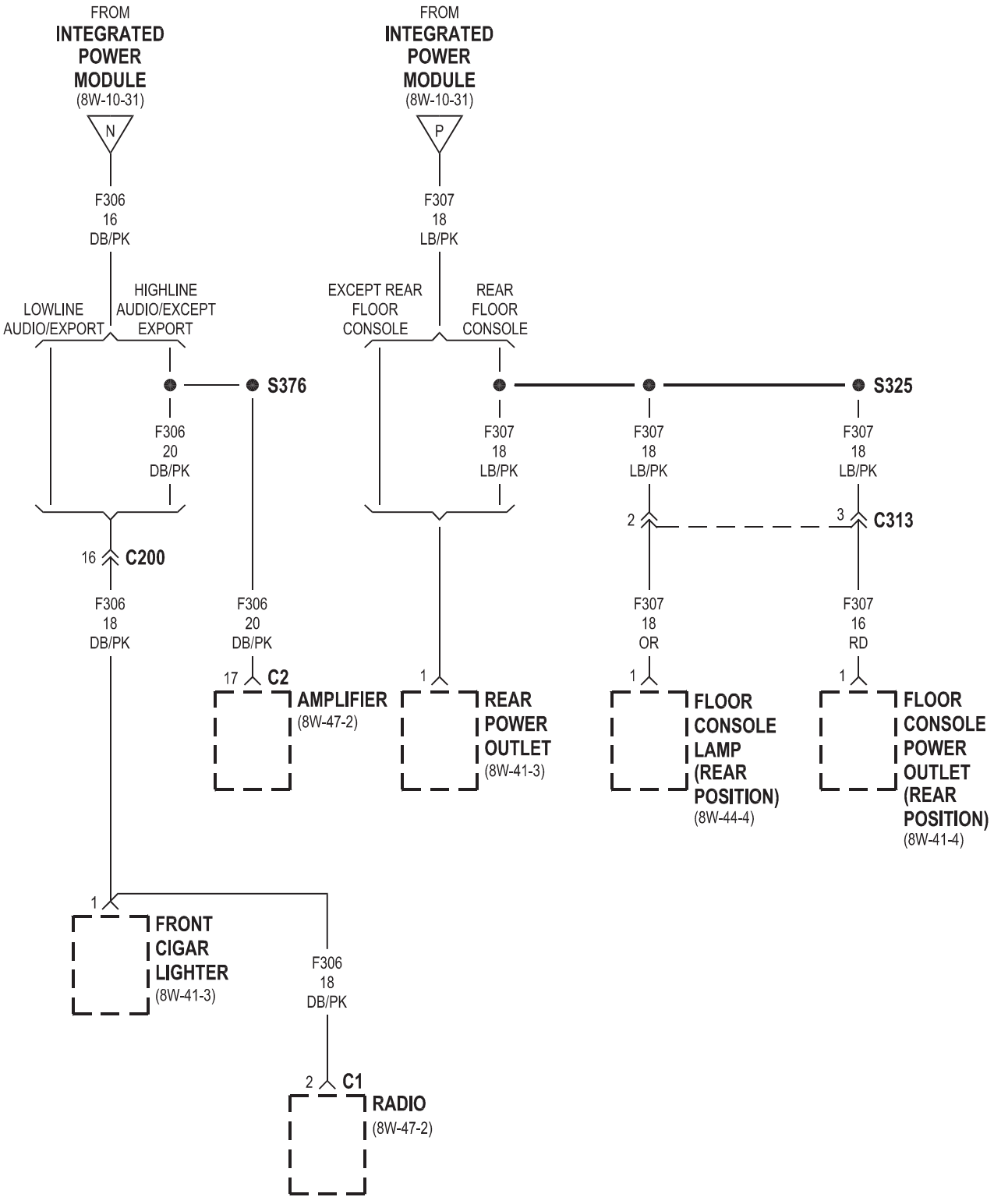
FROM
INTEGRATED
POWER
MODULE
(8W-10-31)
N
F306
16
DB/PK
LOWLINE
AUDIO/EXPORT
HIGHLINE
AUDIO/EXCEPT
EXPORT
S376
F306
20
DB/PK
16
C200
F306
18
DB/PK
F306
20
DB/PK
17
C2
AMPLIFIER
(8W-47-2)
1
FRONT
CIGAR
LIGHTER
(8W-41-3)
F306
18
DB/PK
2
C1
RADIO
(8W-47-2)
FROM
INTEGRATED
POWER
MODULE
(8W-10-31)
P
F307
18
LB/PK
EXCEPT REAR
FLOOR
CONSOLE
REAR
FLOOR
CONSOLE
S325
F307
18
LB/PK
F307
18
LB/PK
F307
18
LB/PK
2
3
C313
F307
18
OR
F307
16
RD
1
REAR
POWER
OUTLET
(8W-41-3)
1
FLOOR
CONSOLE
LAMP
(REAR
POSITION)
(8W-44-4)
1
FLOOR
CONSOLE
POWER
OUTLET
(REAR
POSITION)
(8W-41-4)

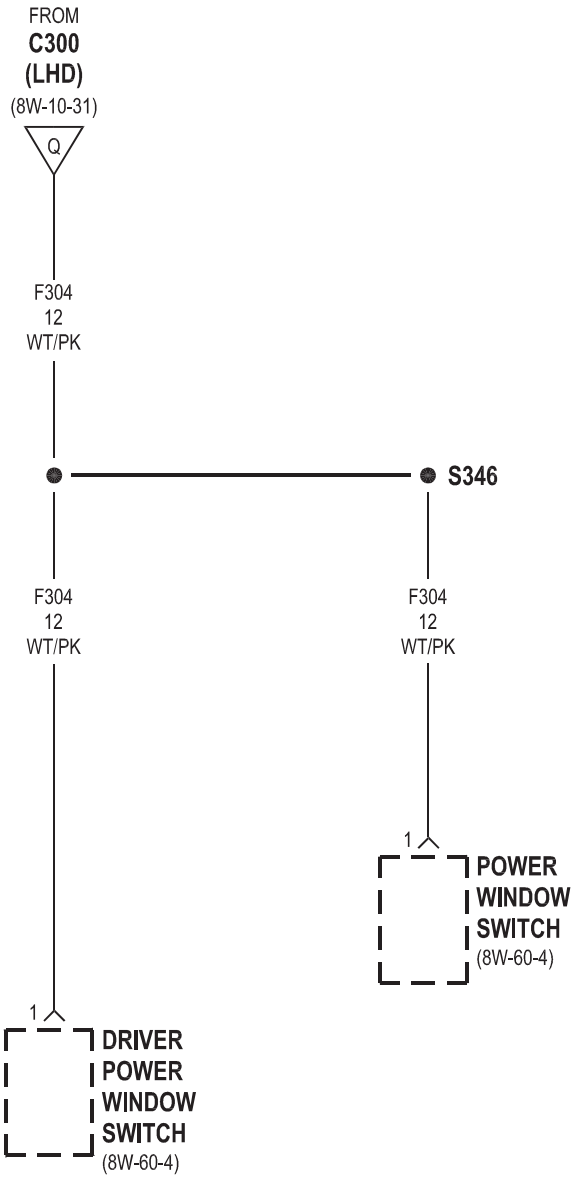
FROM
C300
(LHD)
(8W-10-31)
Q
F304
12
WT/PK
S346
F304
12
WT/PK
F304
12
WT/PK
1
POWER
WINDOW
SWITCH
(8W-60-4)
1
DRIVER
POWER
WINDOW
SWITCH
(8W-60-4)

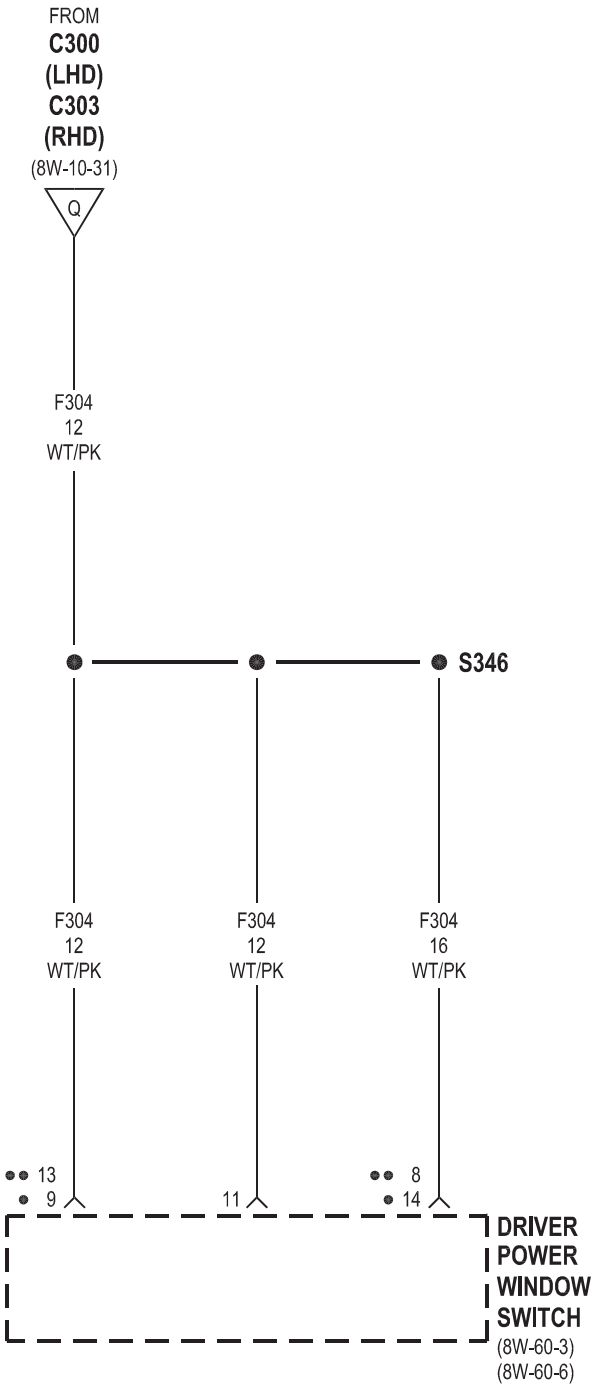
FROM
C300
(LHD)
C303
(RHD)
(8W-10-31)
Q
F304
12
WT/PK
S346
F304
12
WT/PK
F304
12
WT/PK
F304
16
WT/PK
13
9
11
8
14
DRIVER
POWER
WINDOW
SWITCH
(8W-60-3)
(8W-60-6)

• LHD
•• RHD

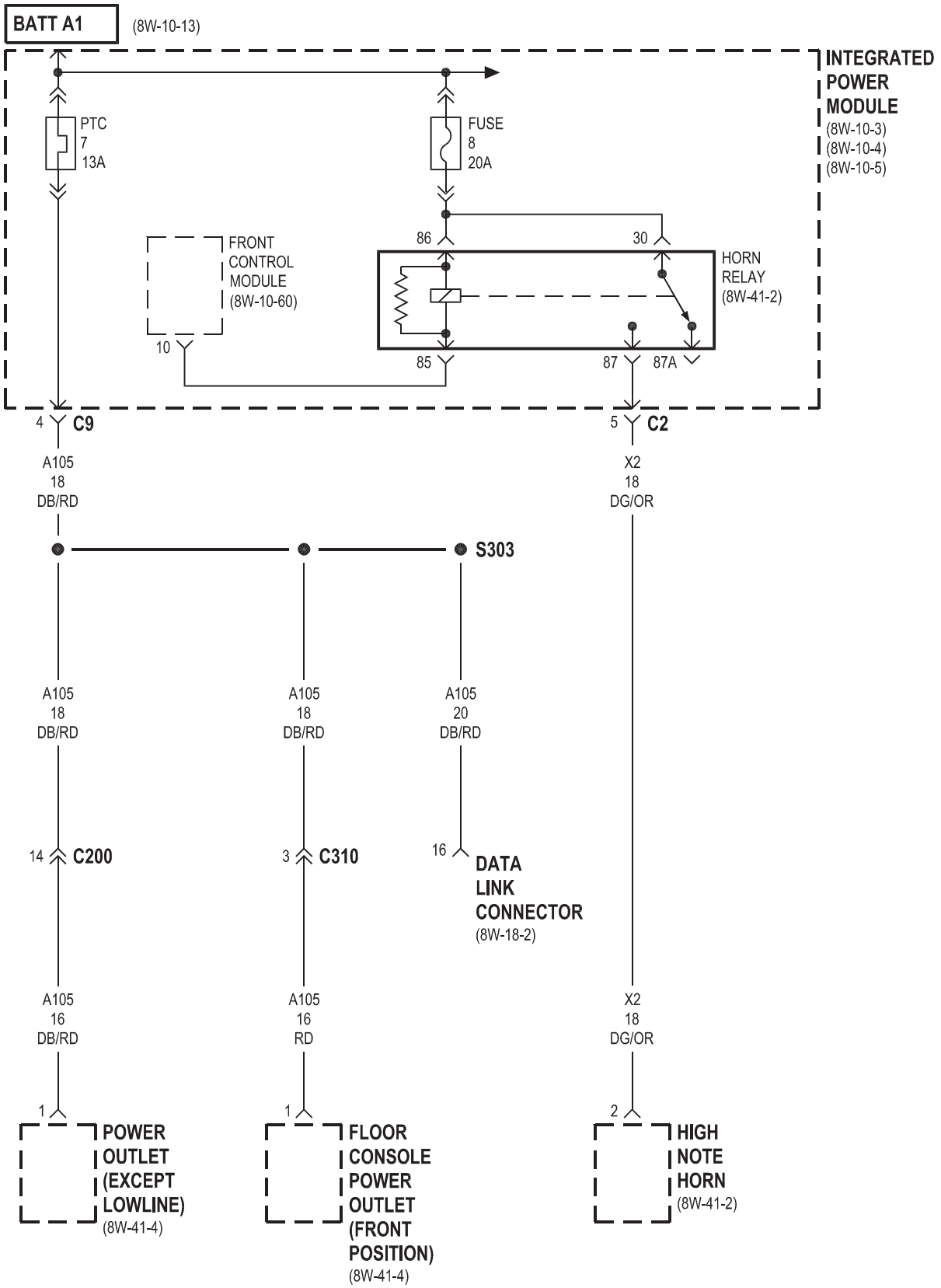
BATT A1
(8W-10-13)
INTEGRATED POWER MODULE
(8W-10-3)
(8W-10-4)
(8W-10-5)
PTC
7
13A
FUSE
8
20A
FRONT CONTROL MODULE
(8W-10-60)
10
86
30
85
87
87A
HORN RELAY
(8W-41-2)
4
C9
5
C2
A105
18
DB/RD
X2
18
DG/OR
S303
A105
18
DB/RD
A105
18
DB/RD
A105
20
DB/RD
14
C200
3
C310
16
DATA LINK CONNECTOR
(8W-18-2)
A105
16
DB/RD
A105
16
RD
X2
18
DG/OR
1
1
2
POWER OUTLET (EXCEPT LOWLINE)
(8W-41-4)
FLOOR CONSOLE POWER OUTLET (FRONT POSITION)
(8W-41-4)
HIGH NOTE HORN
(8W-41-2)

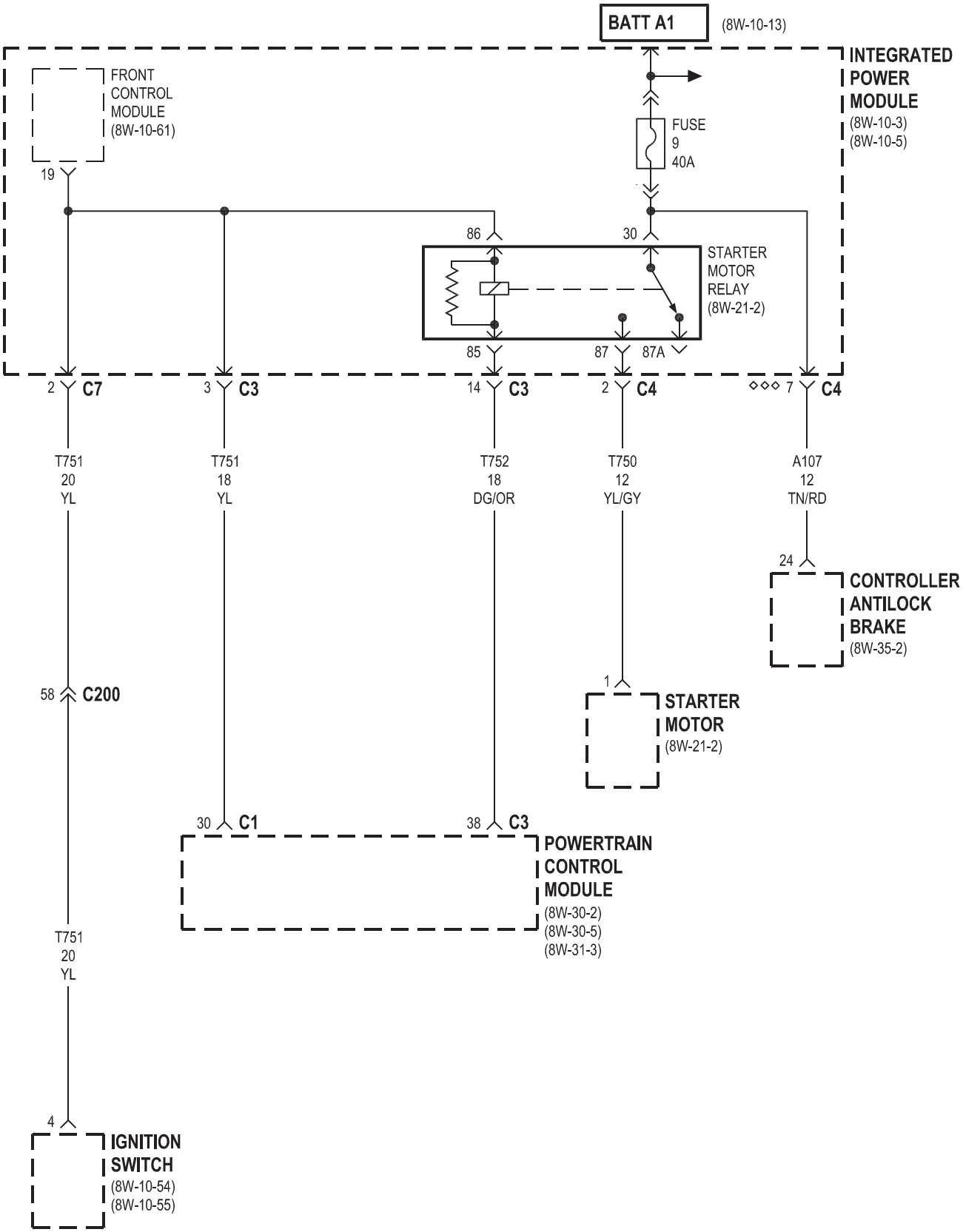
BATT A1
(8W-10-13)
INTEGRATED POWER MODULE
(8W-10-3)
(8W-10-5)
FRONT CONTROL MODULE
(8W-10-61)
19
FUSE
9
40A
86
30
STARTER MOTOR RELAY
(8W-21-2)
85
87
87A
2 C7
3 C3
14 C3
2 C4
◇◇◇ 7 C4
T751
20
YL
T751
18
YL
T752
18
DG/OR
T750
12
YL/GY
A107
12
TN/RD
24
CONTROLLER ANTILOCK BRAKE
(8W-35-2)
1
STARTER MOTOR
(8W-21-2)
58 C200
30 C1
38 C3
POWERTRAIN CONTROL MODULE
(8W-30-2)
(8W-30-5)
(8W-31-3)
T751
20
YL
4
IGNITION SWITCH
(8W-10-54)
(8W-10-55)

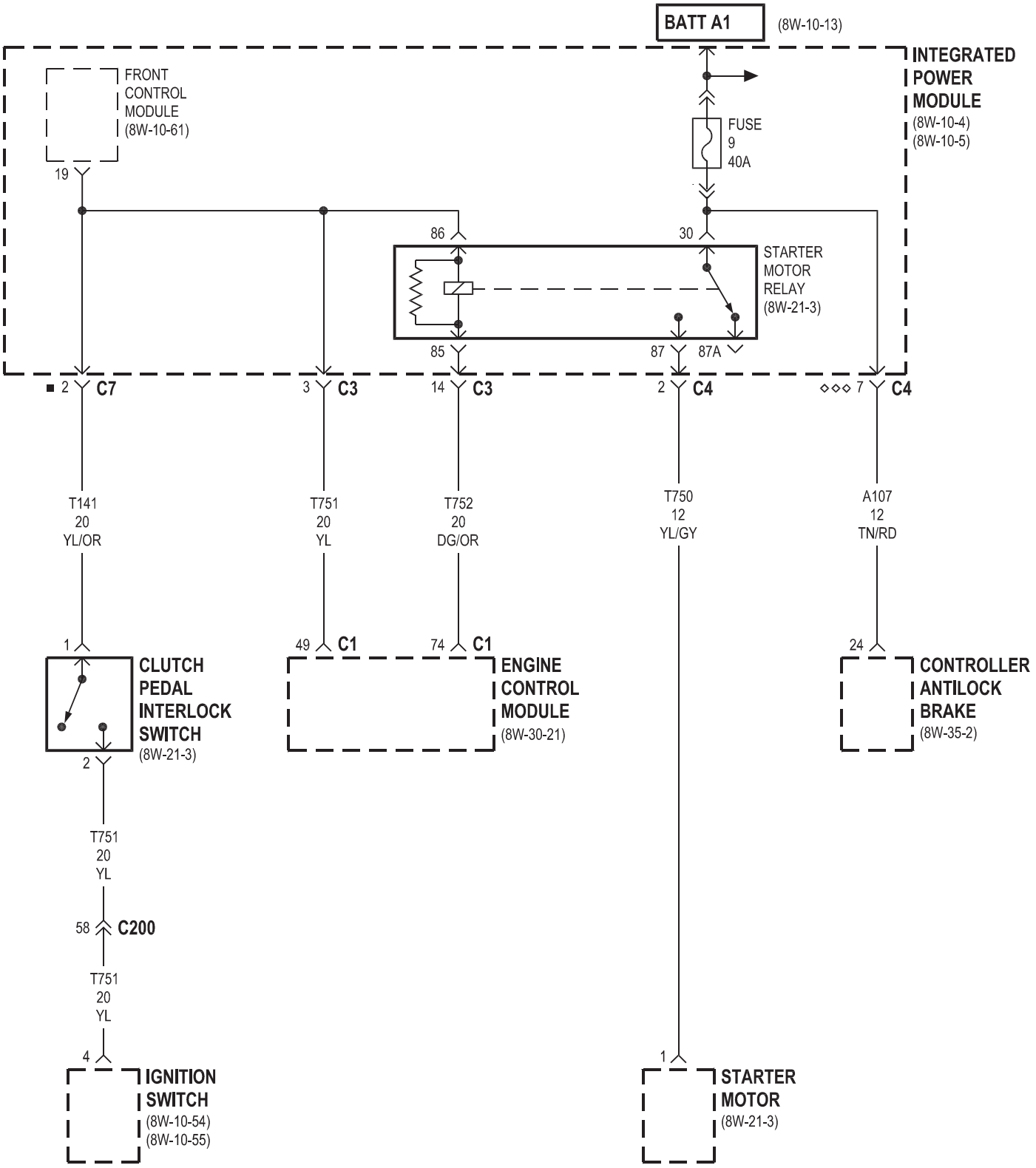
BATT A1
(8W-10-13)
INTEGRATED POWER MODULE
(8W-10-4)
(8W-10-5)
FRONT CONTROL MODULE
(8W-10-61)
19
FUSE
9
40A
86
30
STARTER MOTOR RELAY
(8W-21-3)
85
87
87A
■ 2 C7
3 C3
14 C3
2 C4
◇◇◇ 7 C4
T141
20
YL/OR
T751
20
YL
T752
20
DG/OR
T750
12
YL/GY
A107
12
TN/RD
1
CLUTCH PEDAL INTERLOCK SWITCH
(8W-21-3)
2
49 C1
74 C1
ENGINE CONTROL MODULE
(8W-30-21)
24
CONTROLLER ANTILOCK BRAKE
(8W-35-2)
T751
20
YL
58 C200
T751
20
YL
4
IGNITION SWITCH
(8W-10-54)
(8W-10-55)
1
STARTER MOTOR
(8W-21-3)

■ MTX
◇◇◇ ABS

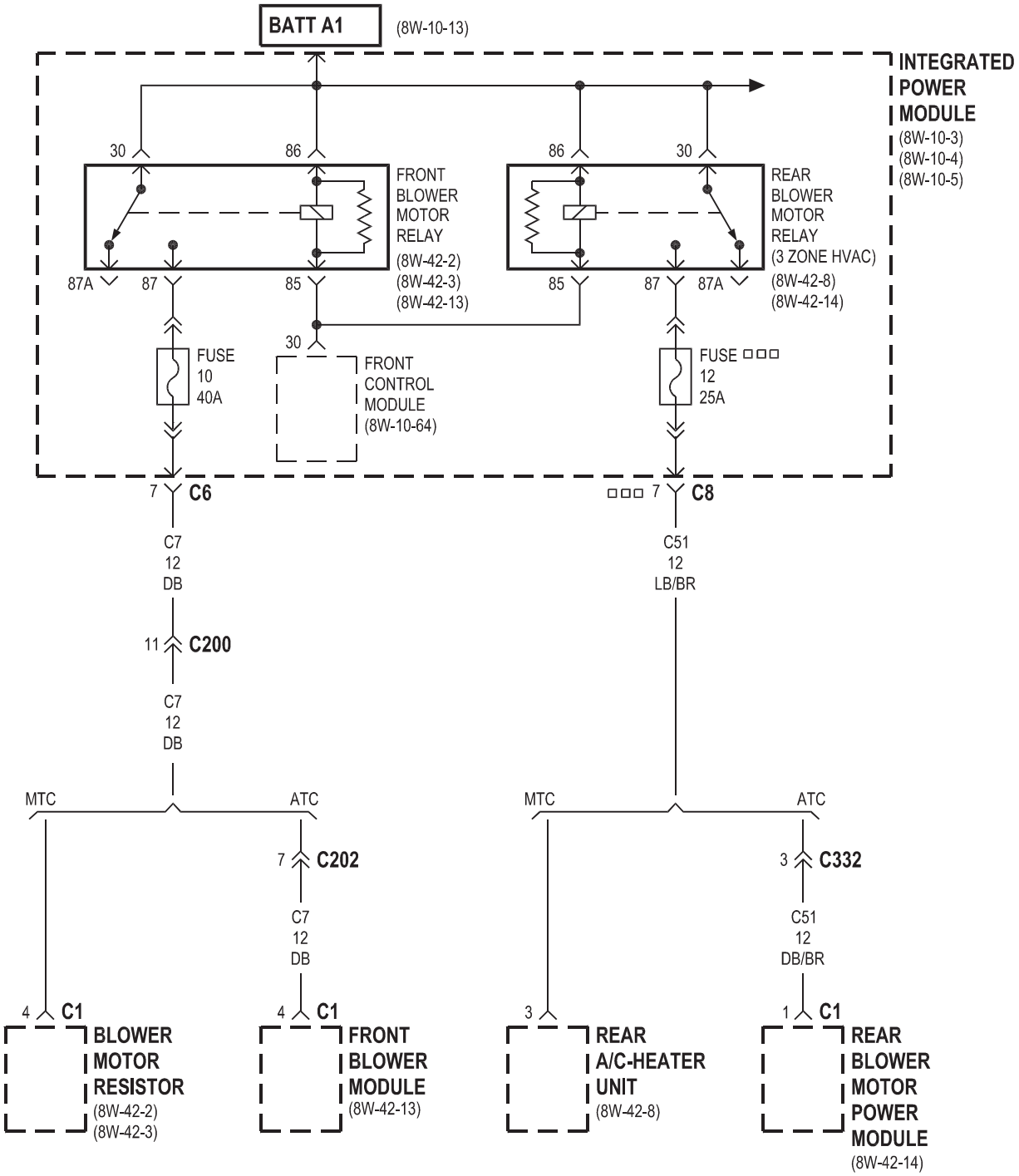
BATT A1
(8W-10-13)
INTEGRATED POWER MODULE
(8W-10-3)
(8W-10-4)
(8W-10-5)
30
86
FRONT BLOWER MOTOR RELAY
(8W-42-2)
(8W-42-3)
(8W-42-13)
87A
87
85
86
30
REAR BLOWER MOTOR RELAY
(3 ZONE HVAC)
(8W-42-8)
(8W-42-14)
85
87
87A
FUSE 10 40A
30
FRONT CONTROL MODULE
(8W-10-64)
FUSE □□□ 12 25A
7 C6
□□□ 7 C8
C7 12 DB
C51 12 LB/BR
11 C200
C7 12 DB
MTC
ATC
7 C202
C7 12 DB
MTC
ATC
3 C332
C51 12 DB/BR
4 C1
BLOWER MOTOR RESISTOR
(8W-42-2)
(8W-42-3)
4 C1
FRONT BLOWER MODULE
(8W-42-13)
3
REAR A/C-HEATER UNIT
(8W-42-8)
1 C1
REAR BLOWER MOTOR POWER MODULE
(8W-42-14)

□□□ 3 ZONE HVAC

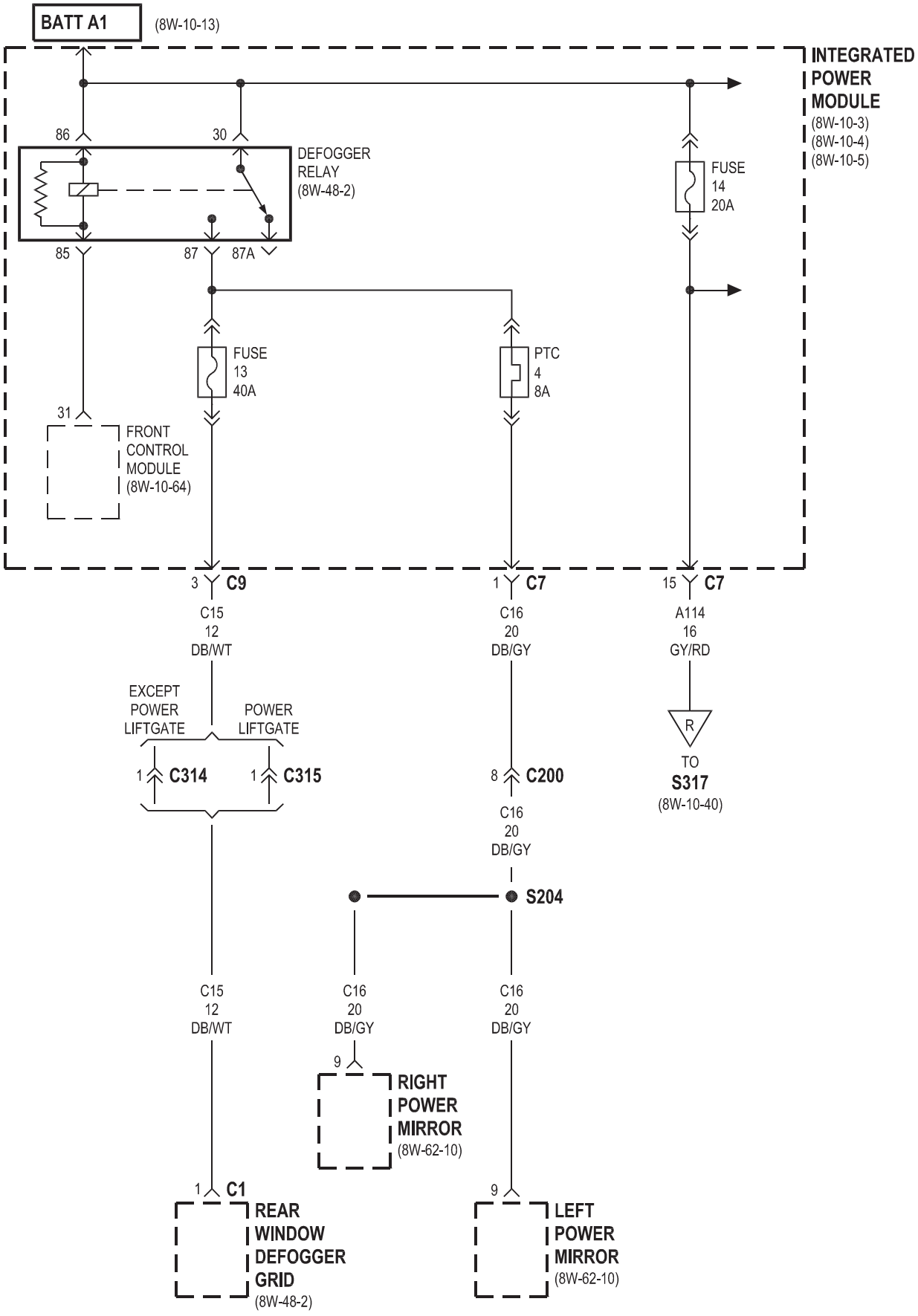
BATT A1
(8W-10-13)
INTEGRATED POWER MODULE
(8W-10-3)
(8W-10-4)
(8W-10-5)
86
30
DEFOGGER RELAY
(8W-48-2)
85
87
87A
FUSE 14 20A
FUSE 13 40A
PTC 4 8A
31
FRONT CONTROL MODULE
(8W-10-64)
3 C9
1 C7
15 C7
C15 12 DB/WT
C16 20 DB/GY
A114 16 GY/RD
EXCEPT POWER LIFTGATE
POWER LIFTGATE
1 C314
1 C315
8 C200
R
TO S317
(8W-10-40)
C16 20 DB/GY
S204
C15 12 DB/WT
C16 20 DB/GY
C16 20 DB/GY
9
RIGHT POWER MIRROR
(8W-62-10)
1 C1
9
REAR WINDOW DEFOGGER GRID
(8W-48-2)
LEFT POWER MIRROR
(8W-62-10)

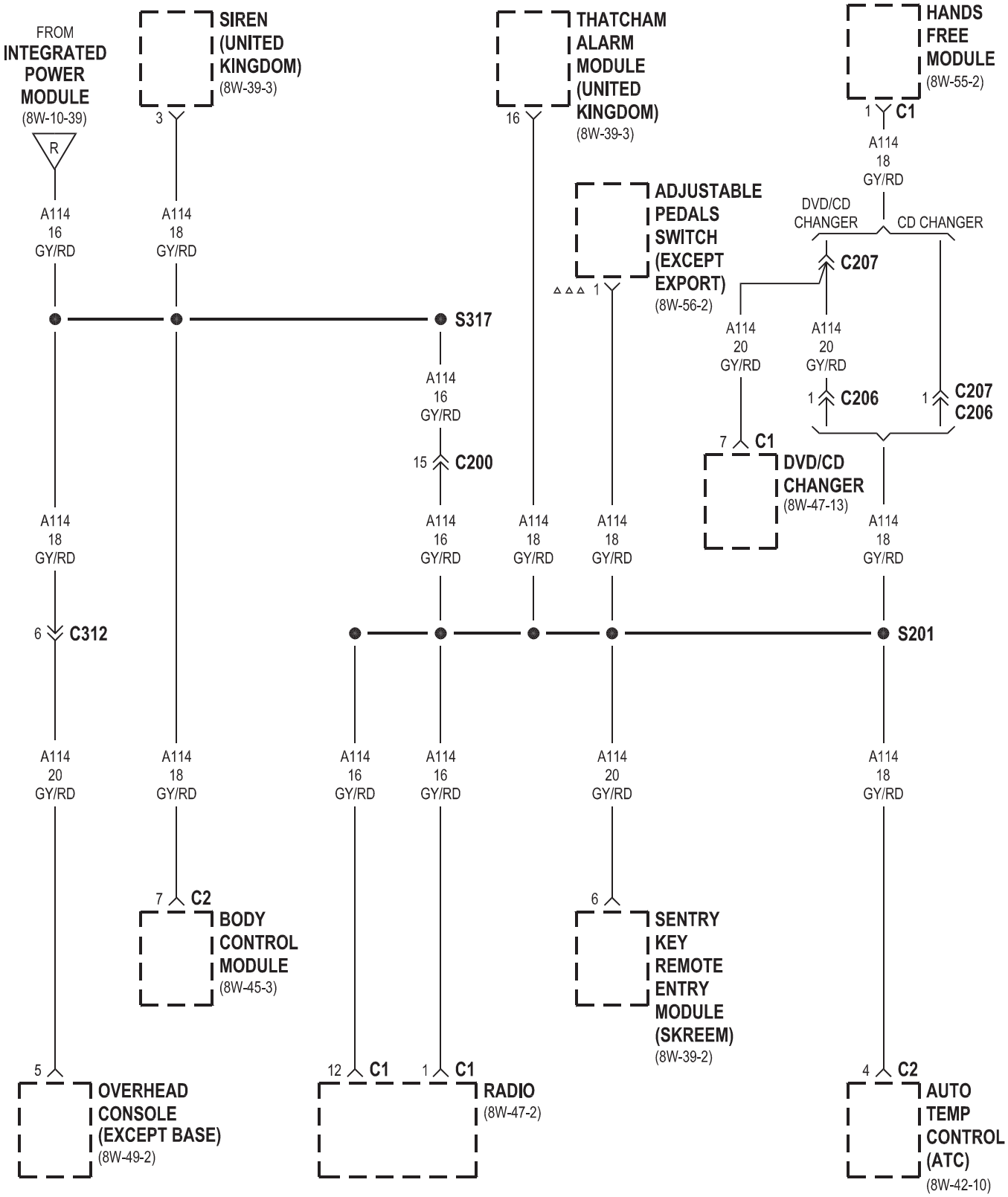
FROM INTEGRATED POWER MODULE (8W-10-39)
R
SIREN (UNITED KINGDOM) (8W-39-3)
3
THATCHAM ALARM MODULE (UNITED KINGDOM) (8W-39-3)
16
HANDS FREE MODULE (8W-55-2)
1 C1
A114 18 GY/RD
DVD/CD CHANGER
CD CHANGER
C207
ADJUSTABLE PEDALS SWITCH (EXCEPT EXPORT) (8W-56-2)
1
A114 16 GY/RD
A114 18 GY/RD
S317
A114 20 GY/RD
A114 20 GY/RD
1 C206
1 C207 C206
A114 16 GY/RD
15 C200
7 C1
DVD/CD CHANGER (8W-47-13)
A114 18 GY/RD
A114 16 GY/RD
A114 18 GY/RD
A114 18 GY/RD
A114 18 GY/RD
6 C312
S201
A114 20 GY/RD
A114 18 GY/RD
A114 16 GY/RD
A114 16 GY/RD
A114 20 GY/RD
A114 18 GY/RD
7 C2
BODY CONTROL MODULE (8W-45-3)
6
SENTRY KEY REMOTE ENTRY MODULE (SKREEM) (8W-39-2)
5
OVERHEAD CONSOLE (EXCEPT BASE) (8W-49-2)
12 C1
1 C1
RADIO (8W-47-2)
4 C2
AUTO TEMP CONTROL (ATC) (8W-42-10)

△△△ MEMORY

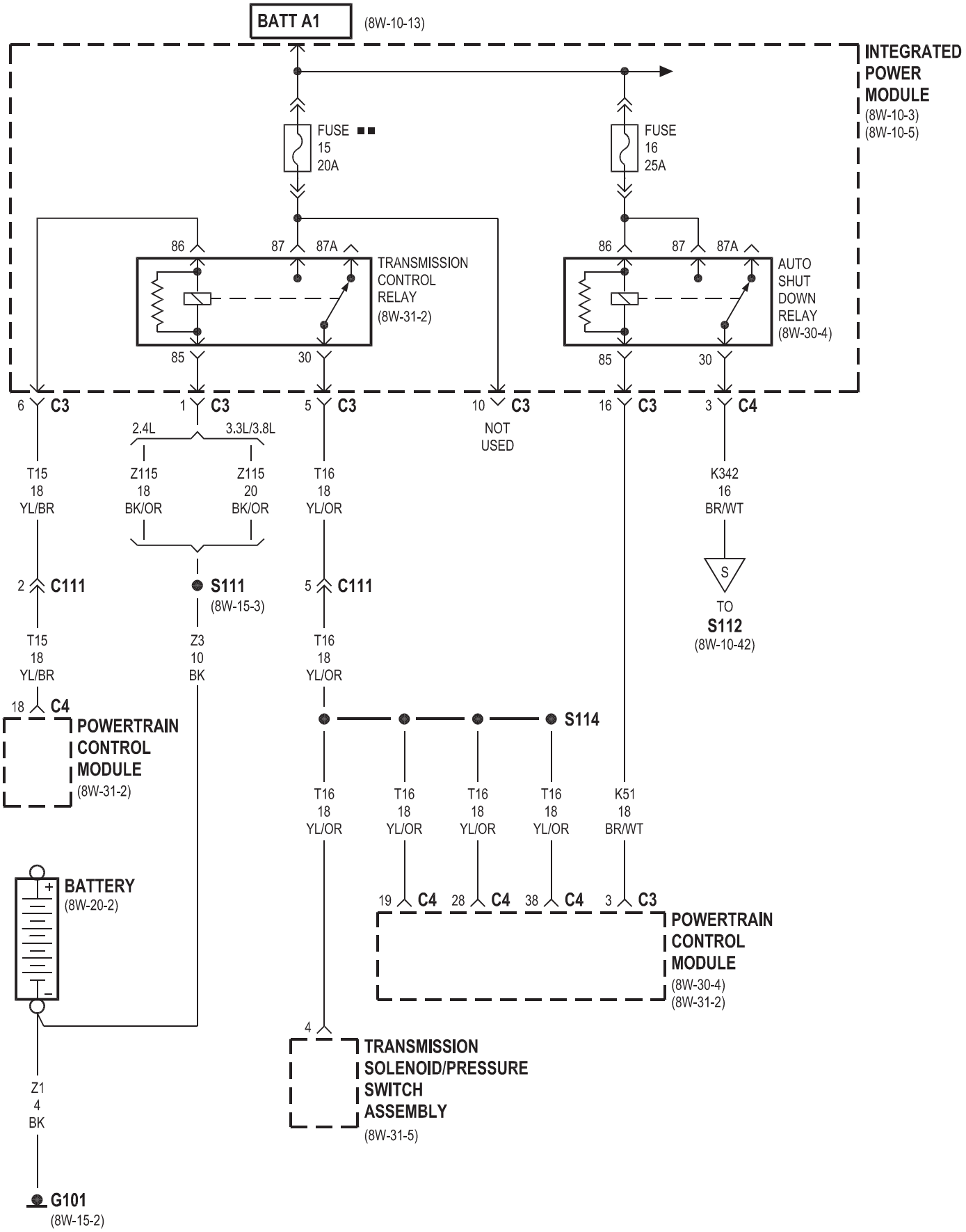
BATT A1
(8W-10-13)
INTEGRATED POWER MODULE
(8W-10-3)
(8W-10-5)
FUSE 15 20A
FUSE 16 25A
86
87
87A
85
30
TRANSMISSION CONTROL RELAY
(8W-31-2)
AUTO SHUT DOWN RELAY
(8W-30-4)
6 C3
1 C3
5 C3
10 C3
16 C3
3 C4
2.4L
3.3L/3.8L
NOT USED
T15 18 YL/BR
Z115 18 BK/OR
Z115 20 BK/OR
T16 18 YL/OR
K342 16 BR/WT
S
TO S112
(8W-10-42)
2 C111
S111
(8W-15-3)
5 C111
Z3 10 BK
18 C4
POWERTRAIN CONTROL MODULE
(8W-31-2)
S114
T16 18 YL/OR
K51 18 BR/WT
19 C4
28 C4
38 C4
3 C3
POWERTRAIN CONTROL MODULE
(8W-30-4)
(8W-31-2)
BATTERY
(8W-20-2)
4
TRANSMISSION SOLENOID/PRESSURE SWITCH ASSEMBLY
(8W-31-5)
Z1 4 BK
G101
(8W-15-2)
EATX

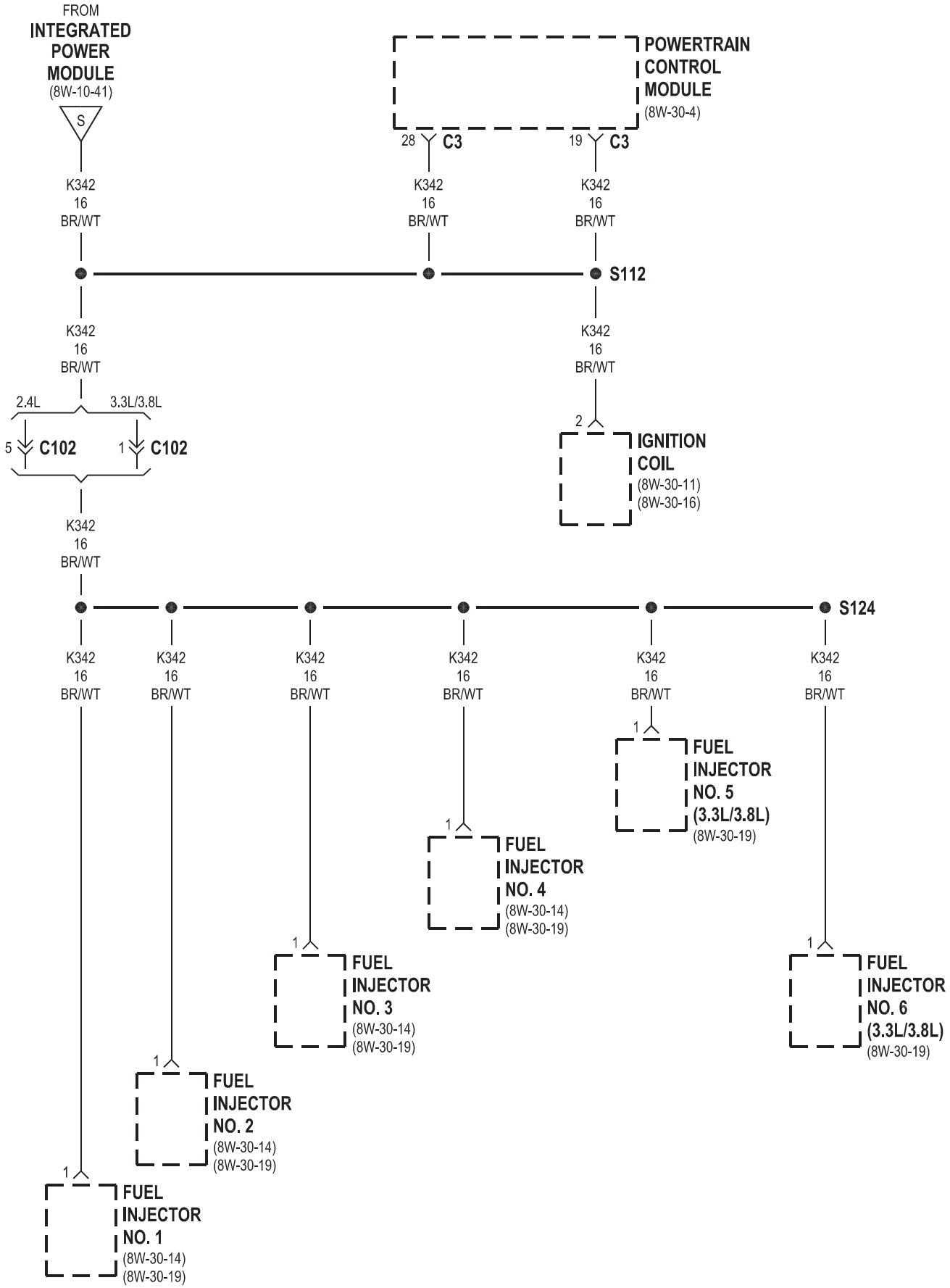
FROM
INTEGRATED
POWER
MODULE
(8W-10-41)
S
POWERTRAIN
CONTROL
MODULE
(8W-30-4)
28 C3
19 C3
K342
16
BR/WT
S112
2.4L
3.3L/3.8L
5 C102
1 C102
2
IGNITION
COIL
(8W-30-11)
(8W-30-16)
S124
FUEL
INJECTOR
NO. 1
(8W-30-14)
(8W-30-19)
FUEL
INJECTOR
NO. 2
(8W-30-14)
(8W-30-19)
FUEL
INJECTOR
NO. 3
(8W-30-14)
(8W-30-19)
FUEL
INJECTOR
NO. 4
(8W-30-14)
(8W-30-19)
FUEL
INJECTOR
NO. 5
(3.3L/3.8L)
(8W-30-19)
FUEL
INJECTOR
NO. 6
(3.3L/3.8L)
(8W-30-19)

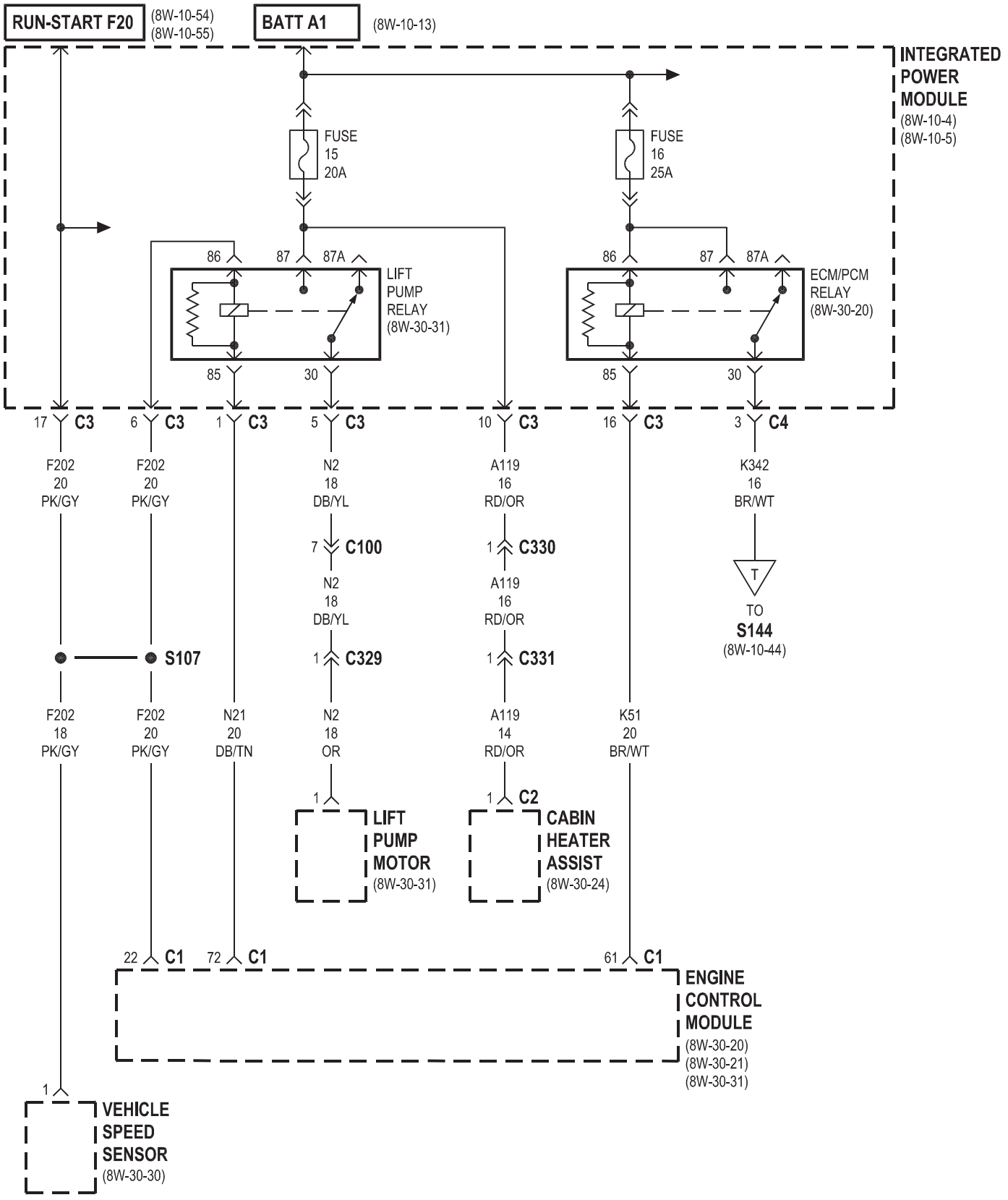
RUN-START F20
(8W-10-54)
(8W-10-55)
BATT A1
(8W-10-13)
INTEGRATED POWER MODULE
(8W-10-4)
(8W-10-5)
FUSE 15 20A
FUSE 16 25A
86
87
87A
LIFT PUMP RELAY
(8W-30-31)
ECM/PCM RELAY
(8W-30-20)
85
30
17 C3
6 C3
1 C3
5 C3
10 C3
16 C3
3 C4
F202 20 PK/GY
F202 20 PK/GY
N2 18 DB/YL
A119 16 RD/OR
K342 16 BR/WT
7 C100
1 C330
N2 18 DB/YL
A119 16 RD/OR
T
TO S144
(8W-10-44)
S107
1 C329
1 C331
F202 18 PK/GY
F202 20 PK/GY
N21 20 DB/TN
N2 18 OR
A119 14 RD/OR
K51 20 BR/WT
1
1 C2
LIFT PUMP MOTOR
(8W-30-31)
CABIN HEATER ASSIST
(8W-30-24)
22 C1
72 C1
61 C1
ENGINE CONTROL MODULE
(8W-30-20)
(8W-30-21)
(8W-30-31)
1
VEHICLE SPEED SENSOR
(8W-30-30)

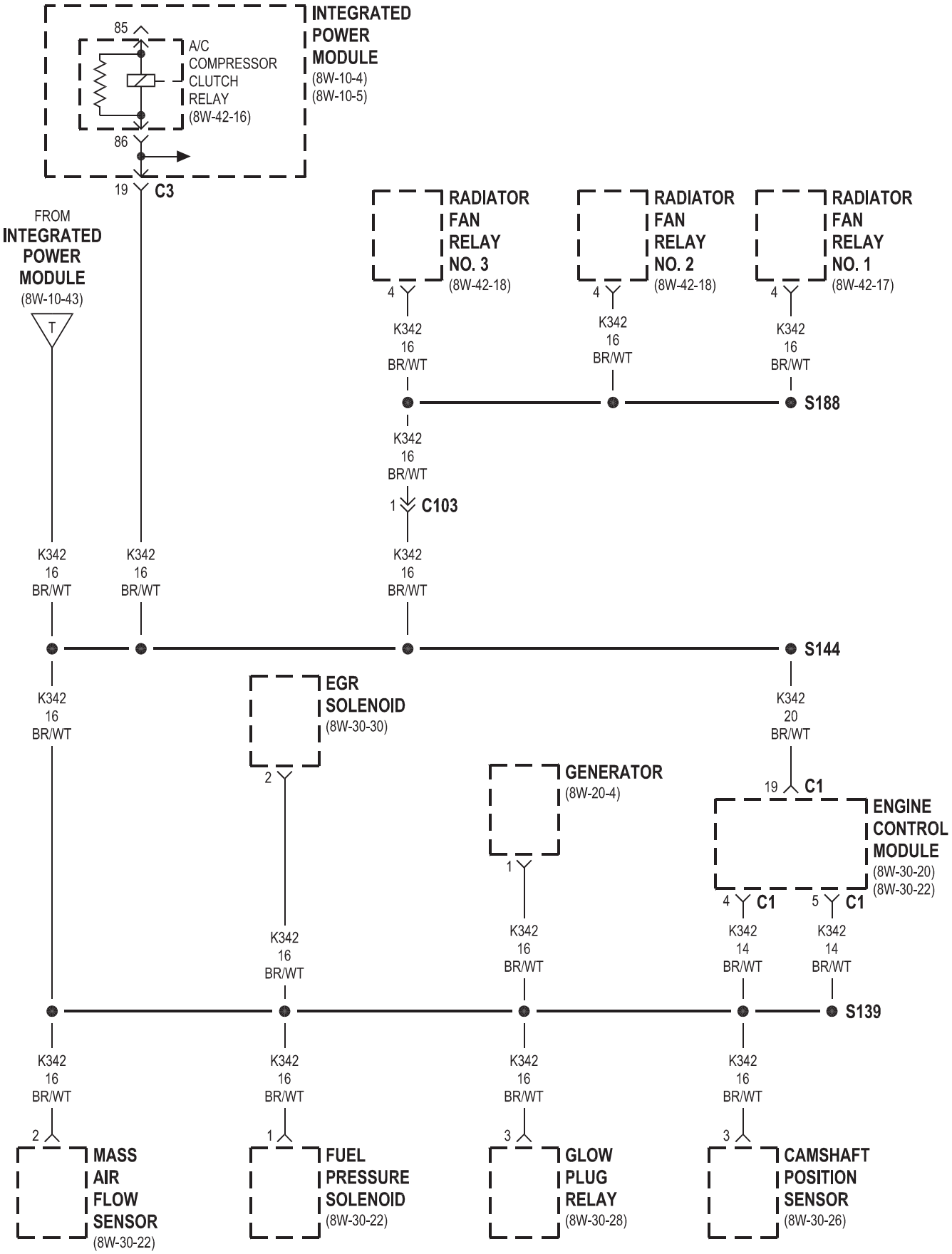
INTEGRATED POWER MODULE
(8W-10-4)
(8W-10-5)
85
A/C COMPRESSOR CLUTCH RELAY
(8W-42-16)
86
19 C3
FROM INTEGRATED POWER MODULE
(8W-10-43)
T
RADIATOR FAN RELAY NO. 3
(8W-42-18)
RADIATOR FAN RELAY NO. 2
(8W-42-18)
RADIATOR FAN RELAY NO. 1
(8W-42-17)
4
K342 16 BR/WT
S188
1 C103
K342 16 BR/WT
S144
K342 20 BR/WT
EGR SOLENOID
(8W-30-30)
2
GENERATOR
(8W-20-4)
1
19 C1
ENGINE CONTROL MODULE
(8W-30-20)
(8W-30-22)
4 C1
5 C1
K342 14 BR/WT
S139
MASS AIR FLOW SENSOR
(8W-30-22)
FUEL PRESSURE SOLENOID
(8W-30-22)
GLOW PLUG RELAY
(8W-30-28)
CAMSHAFT POSITION SENSOR
(8W-30-26)
3

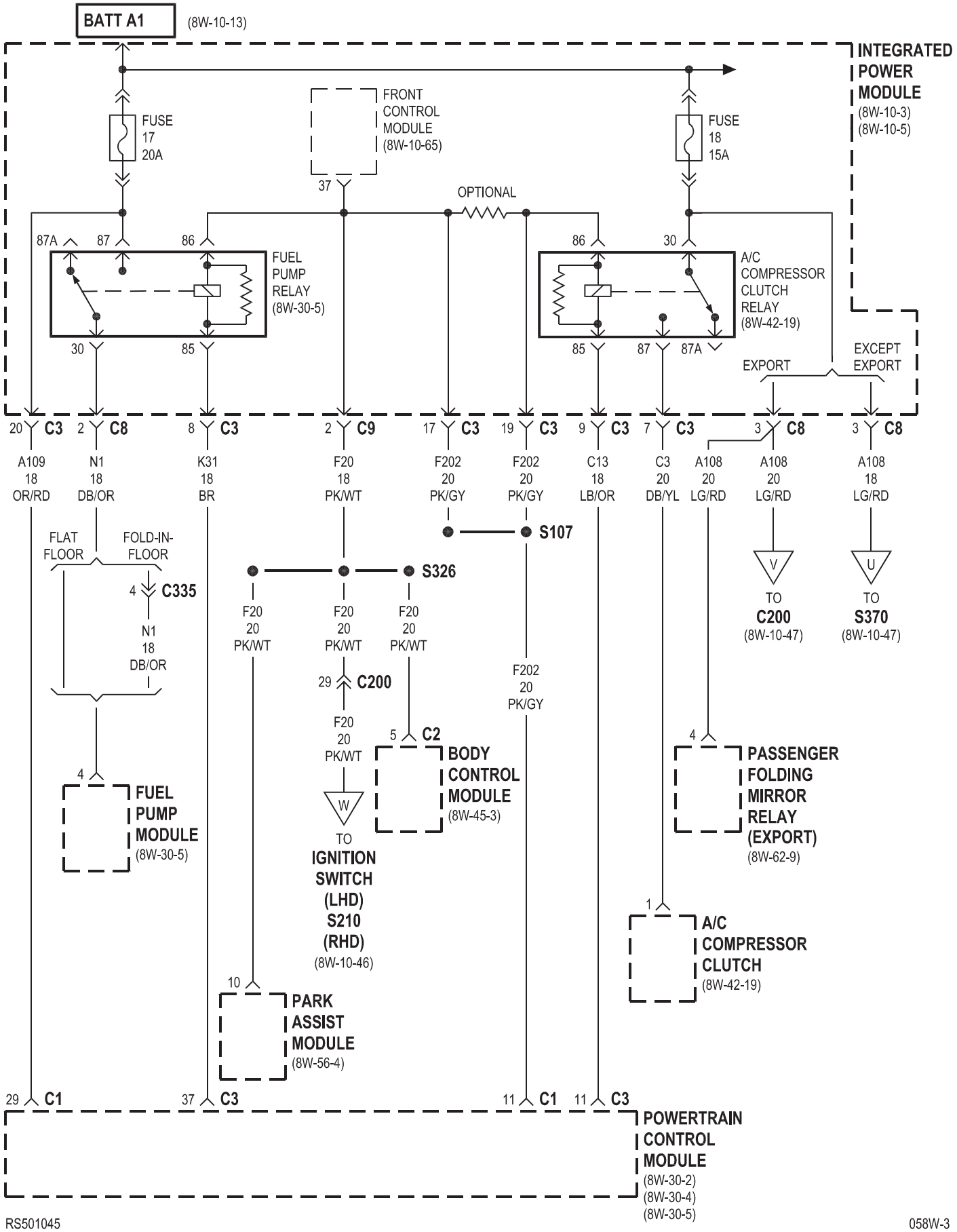
BATT A1
(8W-10-13)
INTEGRATED POWER MODULE
(8W-10-3)
(8W-10-5)
FUSE 17 20A
FRONT CONTROL MODULE
(8W-10-65)
FUSE 18 15A
OPTIONAL
87A
87
86
FUEL PUMP RELAY
(8W-30-5)
30
85
86
30
A/C COMPRESSOR CLUTCH RELAY
(8W-42-19)
85
87
87A
EXPORT
EXCEPT EXPORT
20 C3 A109 18 OR/RD
2 C8 N1 18 DB/OR
8 C3 K31 18 BR
2 C9 F20 18 PK/WT
17 C3 F202 20 PK/GY
19 C3 F202 20 PK/GY
9 C3 C13 18 LB/OR
7 C3 C3 20 DB/YL
3 C8 A108 20 LG/RD
3 C8 A108 18 LG/RD
S107
FLAT FLOOR
FOLD-IN-FLOOR
4 C335
N1 18 DB/OR
S326
F20 20 PK/WT
F20 20 PK/WT
F20 20 PK/WT
29 C200
F20 20 PK/WT
W
TO IGNITION SWITCH (LHD) S210 (RHD)
(8W-10-46)
5 C2
BODY CONTROL MODULE
(8W-45-3)
F202 20 PK/GY
V
TO C200
(8W-10-47)
U
TO S370
(8W-10-47)
4
PASSENGER FOLDING MIRROR RELAY (EXPORT)
(8W-62-9)
4
FUEL PUMP MODULE
(8W-30-5)
1
A/C COMPRESSOR CLUTCH
(8W-42-19)
10
PARK ASSIST MODULE
(8W-56-4)
29 C1
37 C3
11 C1
11 C3
POWERTRAIN CONTROL MODULE
(8W-30-2)
(8W-30-4)
(8W-30-5)

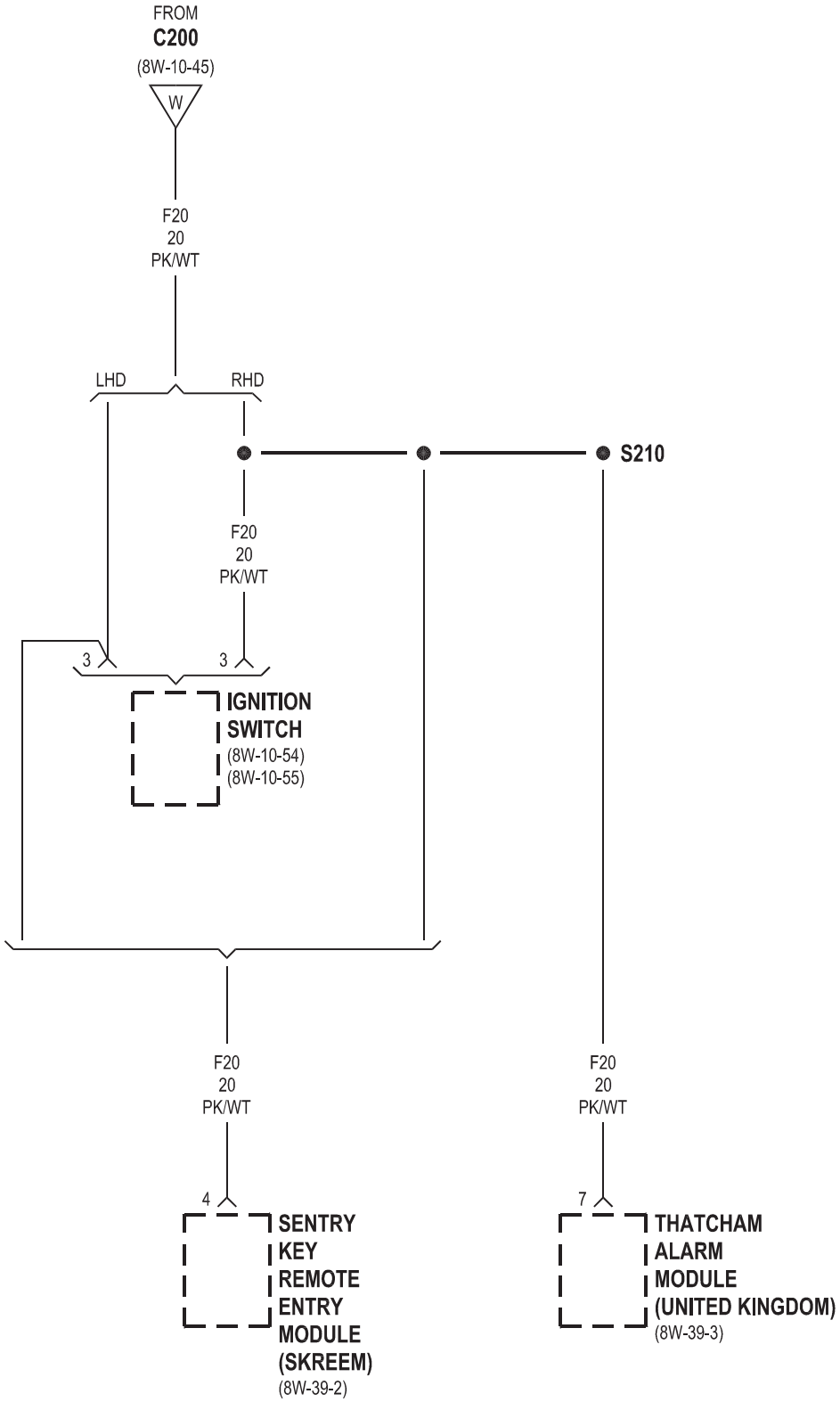
FROM
C200
(8W-10-45)
W
F20
20
PK/WT
LHD
RHD
S210
F20
20
PK/WT
3
3
IGNITION
SWITCH
(8W-10-54)
(8W-10-55)
F20
20
PK/WT
F20
20
PK/WT
4
7
SENTRY
KEY
REMOTE
ENTRY
MODULE
(SKREEM)
(8W-39-2)
THATCHAM
ALARM
MODULE
(UNITED KINGDOM)
(8W-39-3)

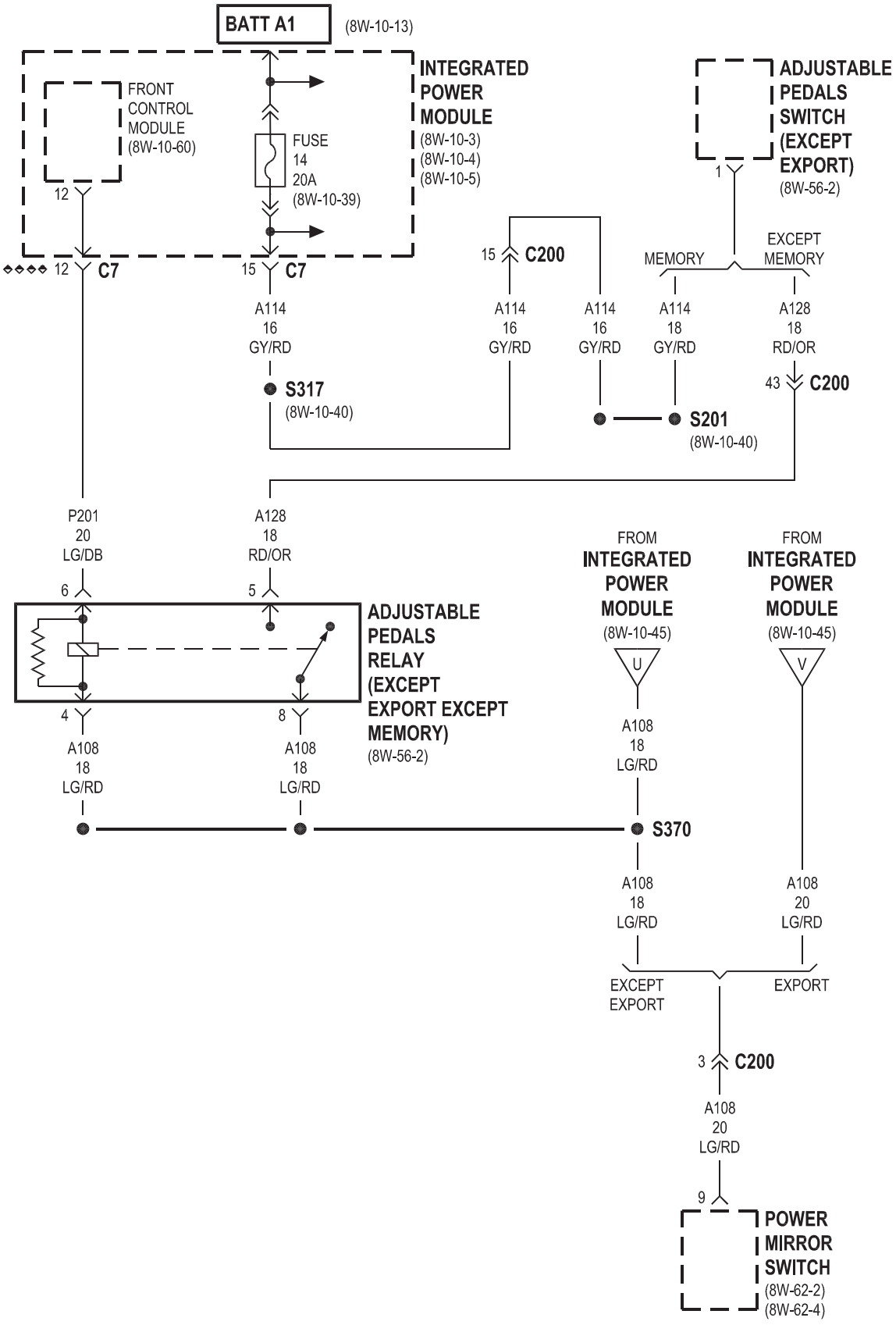

◆◆◆◆ EXCEPT EXPORT EXCEPT MEMORY

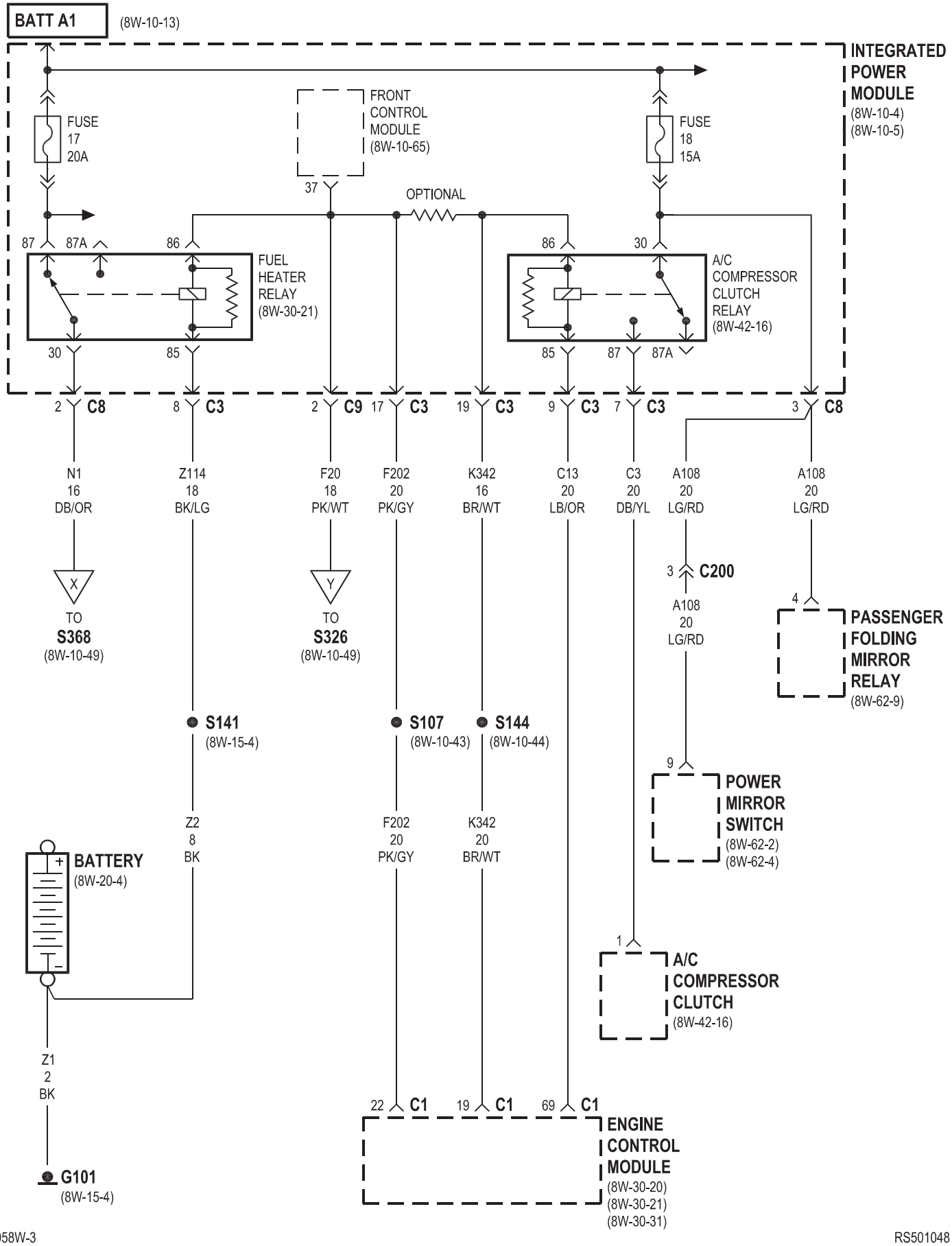
BATT A1
(8W-10-13)
INTEGRATED POWER MODULE
(8W-10-4)
(8W-10-5)
FUSE 17 20A
FRONT CONTROL MODULE
(8W-10-65)
FUSE 18 15A
OPTIONAL
FUEL HEATER RELAY
(8W-30-21)
A/C COMPRESSOR CLUTCH RELAY
(8W-42-16)
2 C8
8 C3
2 C9
17 C3
19 C3
9 C3
7 C3
3 C8
N1 16 DB/OR
Z114 18 BK/LG
F20 18 PK/WT
F202 20 PK/GY
K342 16 BR/WT
C13 20 LB/OR
C3 20 DB/YL
A108 20 LG/RD
A108 20 LG/RD
TO S368
(8W-10-49)
TO S326
(8W-10-49)
3 C200
A108 20 LG/RD
4
PASSENGER FOLDING MIRROR RELAY
(8W-62-9)
S141
(8W-15-4)
S107
(8W-10-43)
S144
(8W-10-44)
9
POWER MIRROR SWITCH
(8W-62-2)
(8W-62-4)
Z2 8 BK
F202 20 PK/GY
K342 20 BR/WT
BATTERY
(8W-20-4)
1
A/C COMPRESSOR CLUTCH
(8W-42-16)
Z1 2 BK
22 C1
19 C1
69 C1
ENGINE CONTROL MODULE
(8W-30-20)
(8W-30-21)
(8W-30-31)
G101
(8W-15-4)

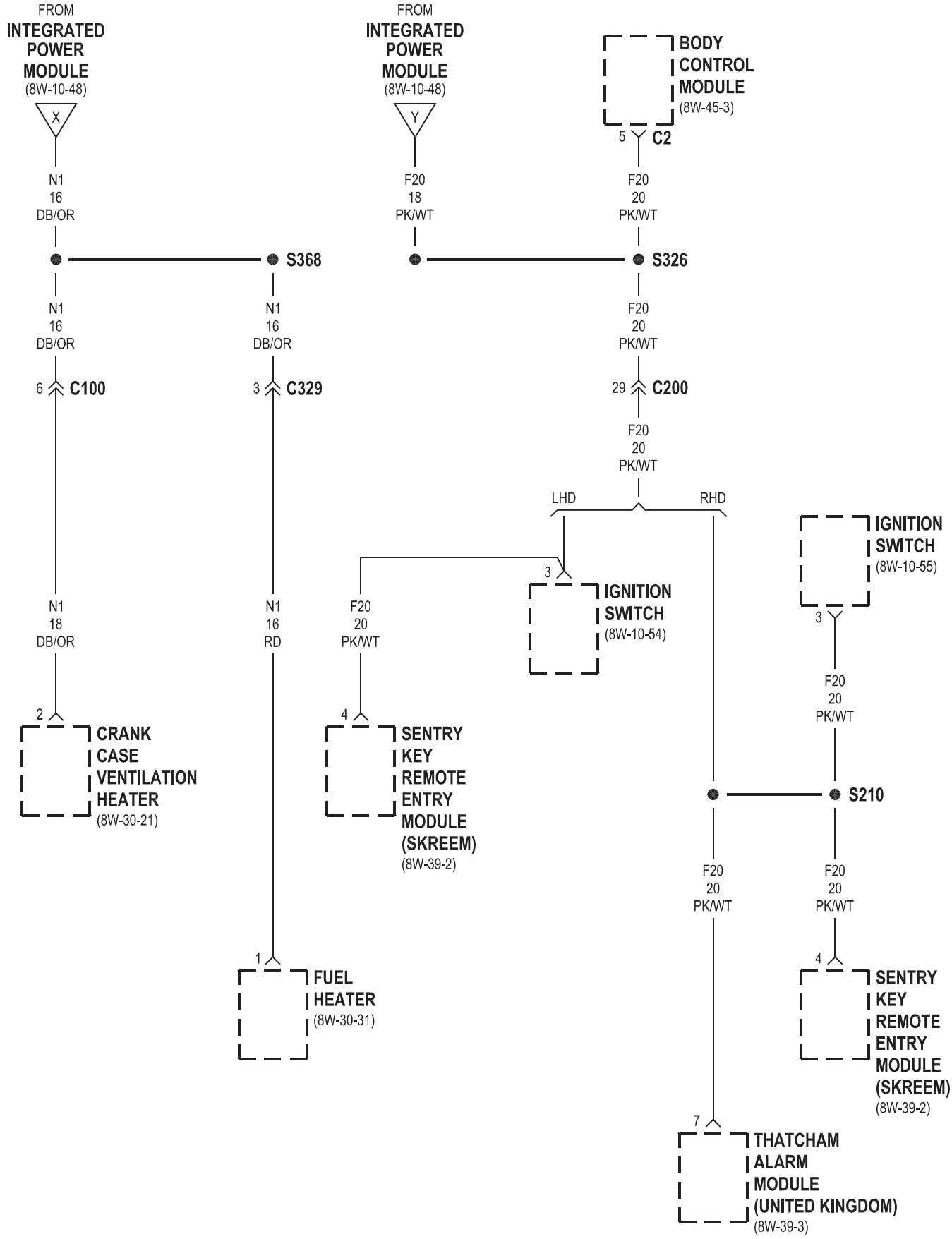
FROM
INTEGRATED POWER MODULE
(8W-10-48)
X
N1
16
DB/OR
S368
N1
16
DB/OR
6 C100
N1
18
DB/OR
2
CRANK CASE VENTILATION HEATER
(8W-30-21)
N1
16
DB/OR
3 C329
N1
16
RD
1
FUEL HEATER
(8W-30-31)
FROM
INTEGRATED POWER MODULE
(8W-10-48)
Y
F20
18
PK/WT
S326
BODY CONTROL MODULE
(8W-45-3)
5 C2
F20
20
PK/WT
F20
20
PK/WT
29 C200
F20
20
PK/WT
LHD
RHD
3
IGNITION SWITCH
(8W-10-54)
F20
20
PK/WT
4
SENTRY KEY REMOTE ENTRY MODULE (SKREEM)
(8W-39-2)
IGNITION SWITCH
(8W-10-55)
3
F20
20
PK/WT
S210
F20
20
PK/WT
F20
20
PK/WT
4
SENTRY KEY REMOTE ENTRY MODULE (SKREEM)
(8W-39-2)
7
THATCHAM ALARM MODULE (UNITED KINGDOM)
(8W-39-3)

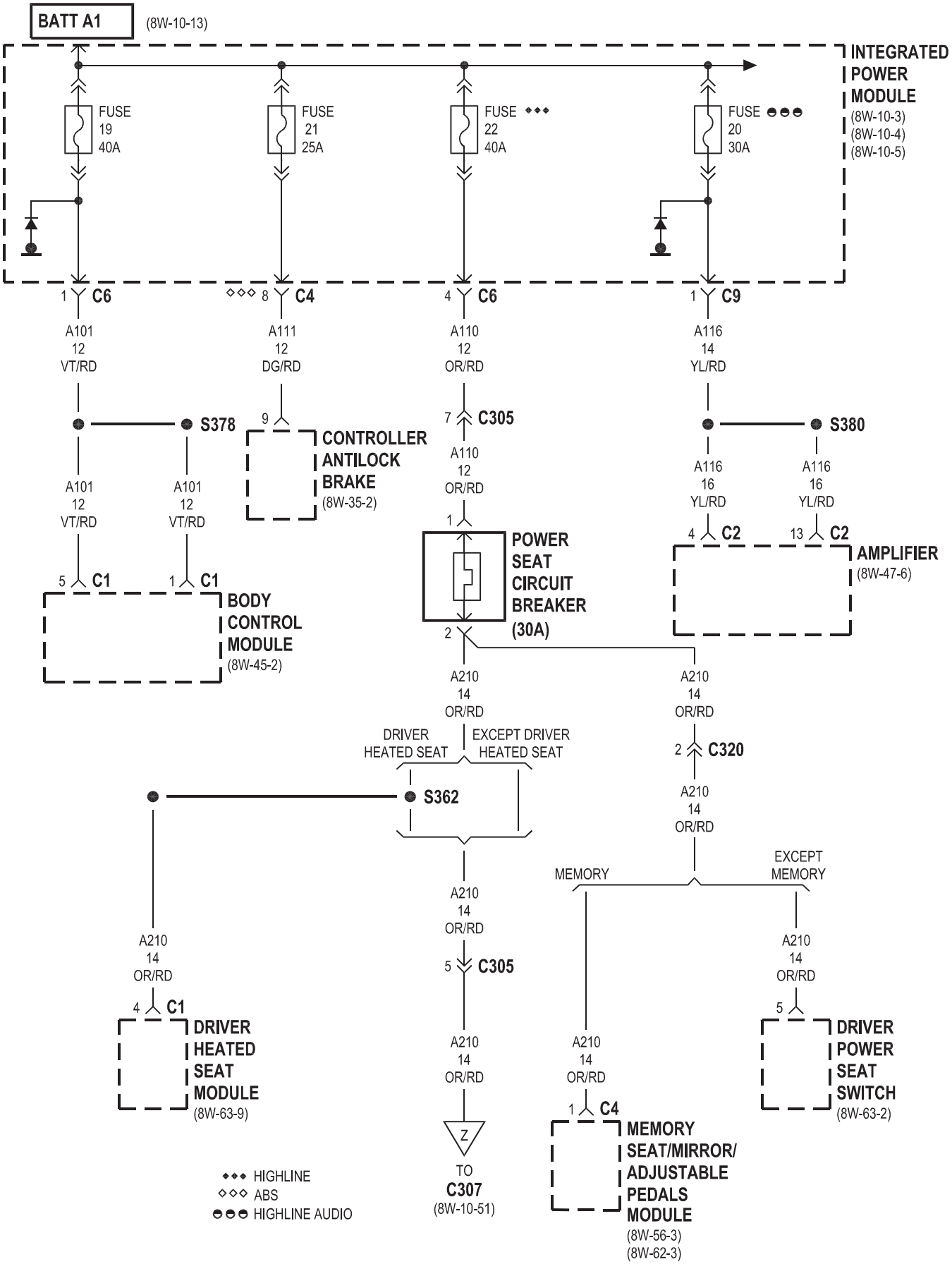
BATT A1
(8W-10-13)
INTEGRATED POWER MODULE
(8W-10-3)
(8W-10-4)
(8W-10-5)
FUSE 19 40A
FUSE 21 25A
FUSE 22 40A
FUSE 20 30A
1 C6
8 C4
4 C6
1 C9
A101 12 VT/RD
A111 12 DG/RD
A110 12 OR/RD
A116 14 YL/RD
S378
S380
9
CONTROLLER ANTILOCK BRAKE
(8W-35-2)
7 C305
A110 12 OR/RD
1
POWER SEAT CIRCUIT BREAKER (30A)
A116 16 YL/RD
4 C2
13 C2
AMPLIFIER
(8W-47-6)
5 C1
1 C1
BODY CONTROL MODULE
(8W-45-2)
2
A210 14 OR/RD
DRIVER HEATED SEAT
EXCEPT DRIVER HEATED SEAT
2 C320
S362
MEMORY
EXCEPT MEMORY
4 C1
DRIVER HEATED SEAT MODULE
(8W-63-9)
5 C305
5
DRIVER POWER SEAT SWITCH
(8W-63-2)
Z
TO C307
(8W-10-51)
1 C4
MEMORY SEAT/MIRROR/ ADJUSTABLE PEDALS MODULE
(8W-56-3)
(8W-62-3)
HIGHLINE
ABS
HIGHLINE AUDIO

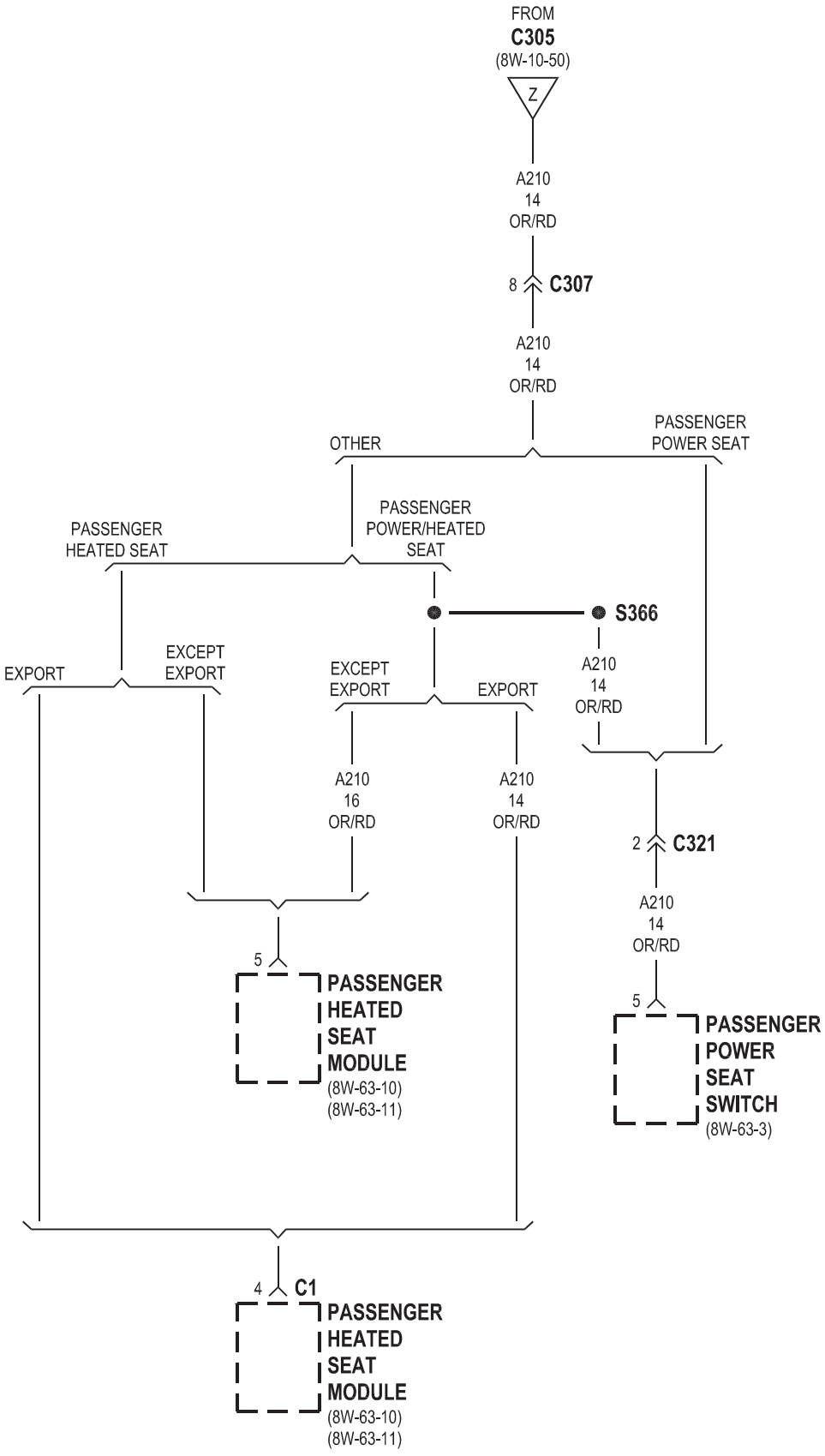
FROM
C305
(8W-10-50)
Z
A210
14
OR/RD
8
C307
A210
14
OR/RD
OTHER
PASSENGER
POWER SEAT
PASSENGER
HEATED SEAT
PASSENGER
POWER/HEATED
SEAT
S366
EXPORT
EXCEPT
EXPORT
EXCEPT
EXPORT
EXPORT
A210
14
OR/RD
A210
16
OR/RD
A210
14
OR/RD
2
C321
A210
14
OR/RD
5
PASSENGER
HEATED
SEAT
MODULE
(8W-63-10)
(8W-63-11)
5
PASSENGER
POWER
SEAT
SWITCH
(8W-63-3)
4
C1
PASSENGER
HEATED
SEAT
MODULE
(8W-63-10)
(8W-63-11)

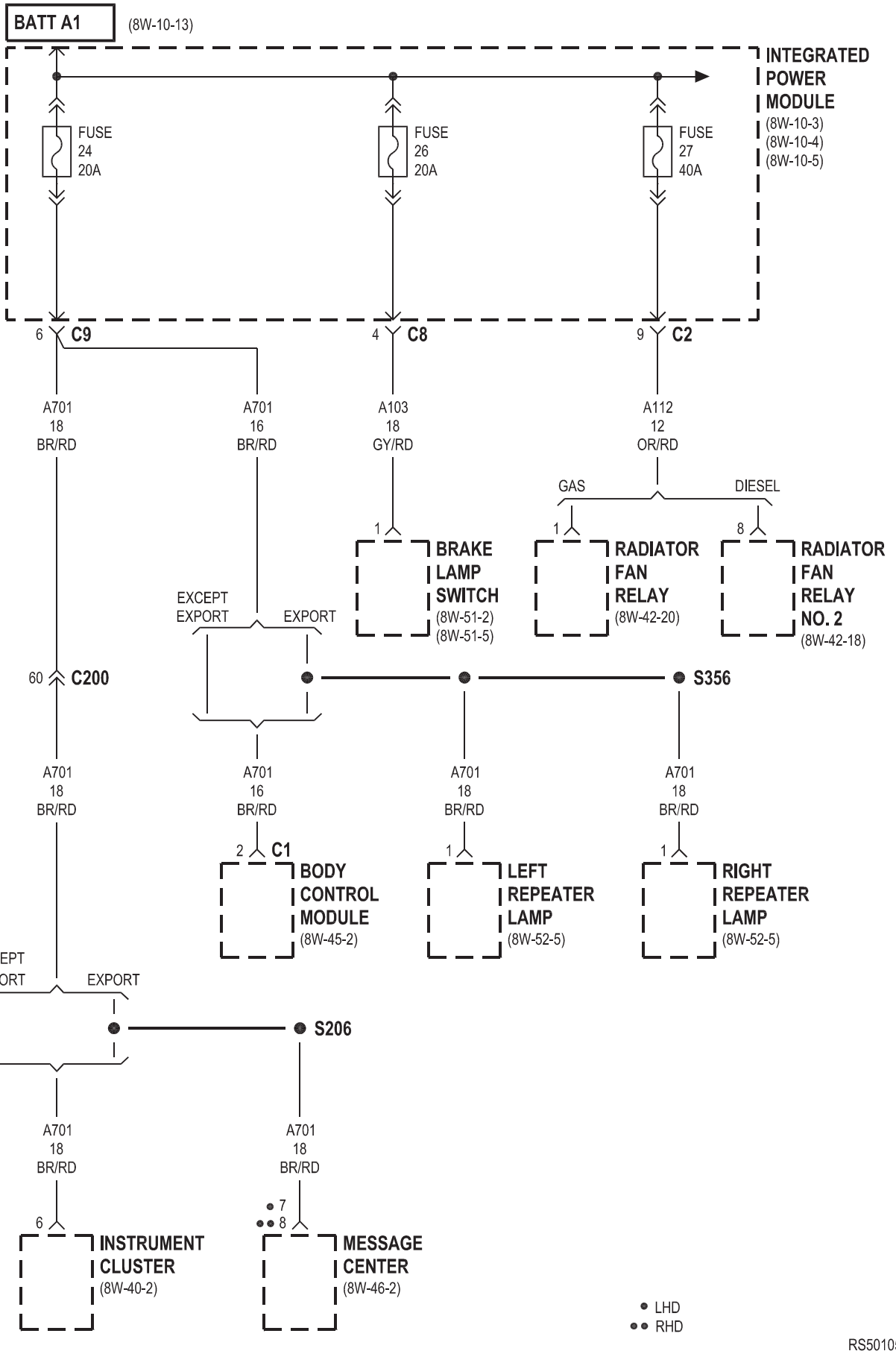
BATT A1
(8W-10-13)
INTEGRATED POWER MODULE
(8W-10-3)
(8W-10-4)
(8W-10-5)
FUSE 24 20A
FUSE 26 20A
FUSE 27 40A
6 C9
4 C8
9 C2
A701 18 BR/RD
A701 16 BR/RD
A103 18 GY/RD
A112 12 OR/RD
GAS
DIESEL
1 BRAKE LAMP SWITCH (8W-51-2) (8W-51-5)
1 RADIATOR FAN RELAY (8W-42-20)
8 RADIATOR FAN RELAY NO. 2 (8W-42-18)
EXCEPT EXPORT
EXPORT
60 C200
S356
A701 18 BR/RD
A701 16 BR/RD
A701 18 BR/RD
A701 18 BR/RD
2 C1 BODY CONTROL MODULE (8W-45-2)
1 LEFT REPEATER LAMP (8W-52-5)
1 RIGHT REPEATER LAMP (8W-52-5)
EXCEPT EXPORT
EXPORT
S206
A701 18 BR/RD
A701 18 BR/RD
6 INSTRUMENT CLUSTER (8W-40-2)
7
8
MESSAGE CENTER (8W-46-2)
LHD
RHD

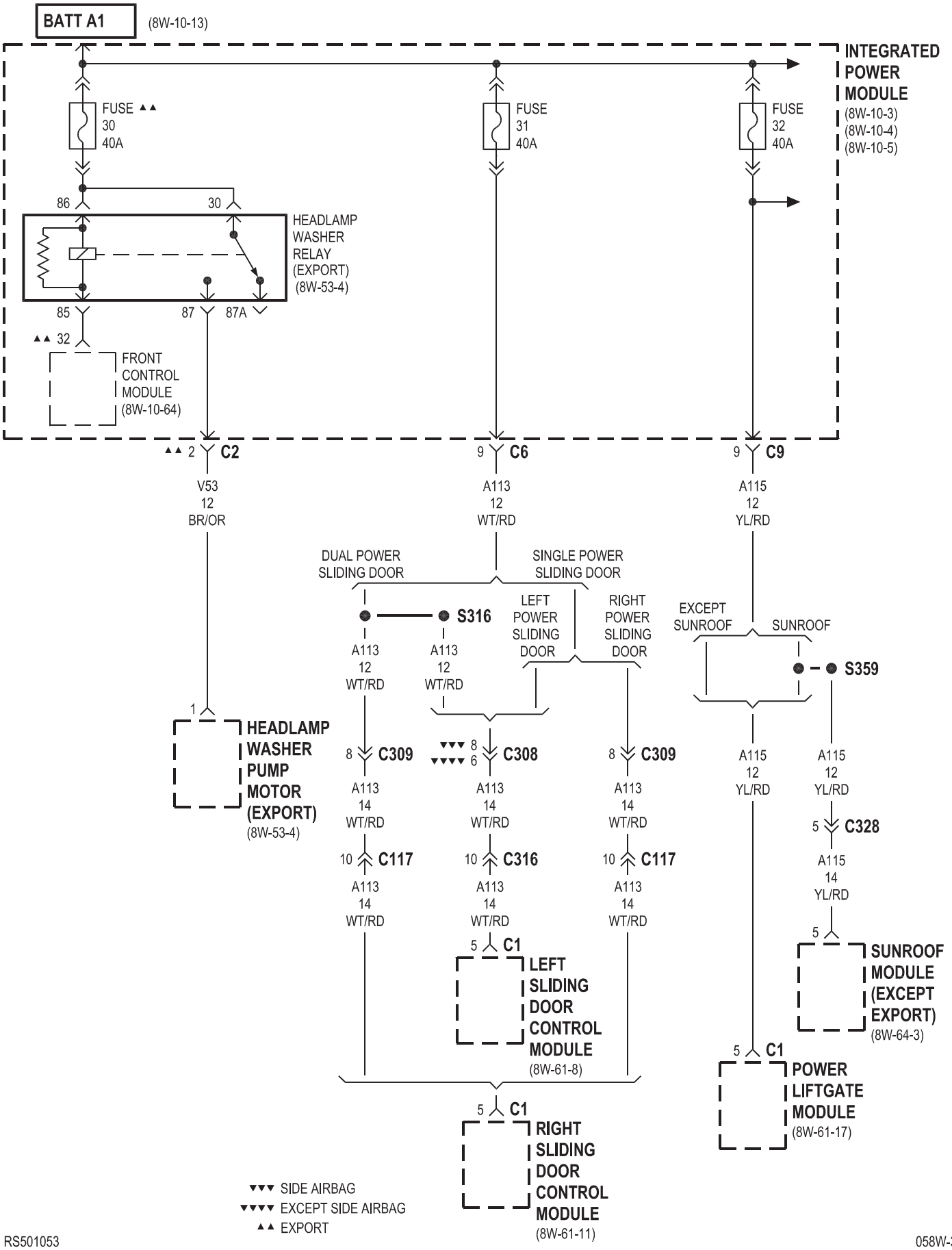
BATT A1
(8W-10-13)
INTEGRATED POWER MODULE
(8W-10-3)
(8W-10-4)
(8W-10-5)
FUSE ▲▲ 30 40A
FUSE 31 40A
FUSE 32 40A
86
30
HEADLAMP WASHER RELAY (EXPORT) (8W-53-4)
85
87
87A
▲▲ 32
FRONT CONTROL MODULE (8W-10-64)
▲▲ 2 C2
9 C6
9 C9
V53 12 BR/OR
A113 12 WT/RD
A115 12 YL/RD
DUAL POWER SLIDING DOOR
SINGLE POWER SLIDING DOOR
S316
LEFT POWER SLIDING DOOR
RIGHT POWER SLIDING DOOR
EXCEPT SUNROOF
SUNROOF
S359
A113 12 WT/RD
A113 12 WT/RD
1
HEADLAMP WASHER PUMP MOTOR (EXPORT)
(8W-53-4)
8 C309
▼▼▼ 8
▼▼▼▼ 6 C308
8 C309
A115 12 YL/RD
A115 12 YL/RD
A113 14 WT/RD
A113 14 WT/RD
A113 14 WT/RD
5 C328
10 C117
10 C316
10 C117
A115 14 YL/RD
5 C1
LEFT SLIDING DOOR CONTROL MODULE
(8W-61-8)
5
SUNROOF MODULE (EXCEPT EXPORT)
(8W-64-3)
5 C1
POWER LIFTGATE MODULE
(8W-61-17)
5 C1
RIGHT SLIDING DOOR CONTROL MODULE
(8W-61-11)
▼▼▼ SIDE AIRBAG
▼▼▼▼ EXCEPT SIDE AIRBAG
▲▲ EXPORT

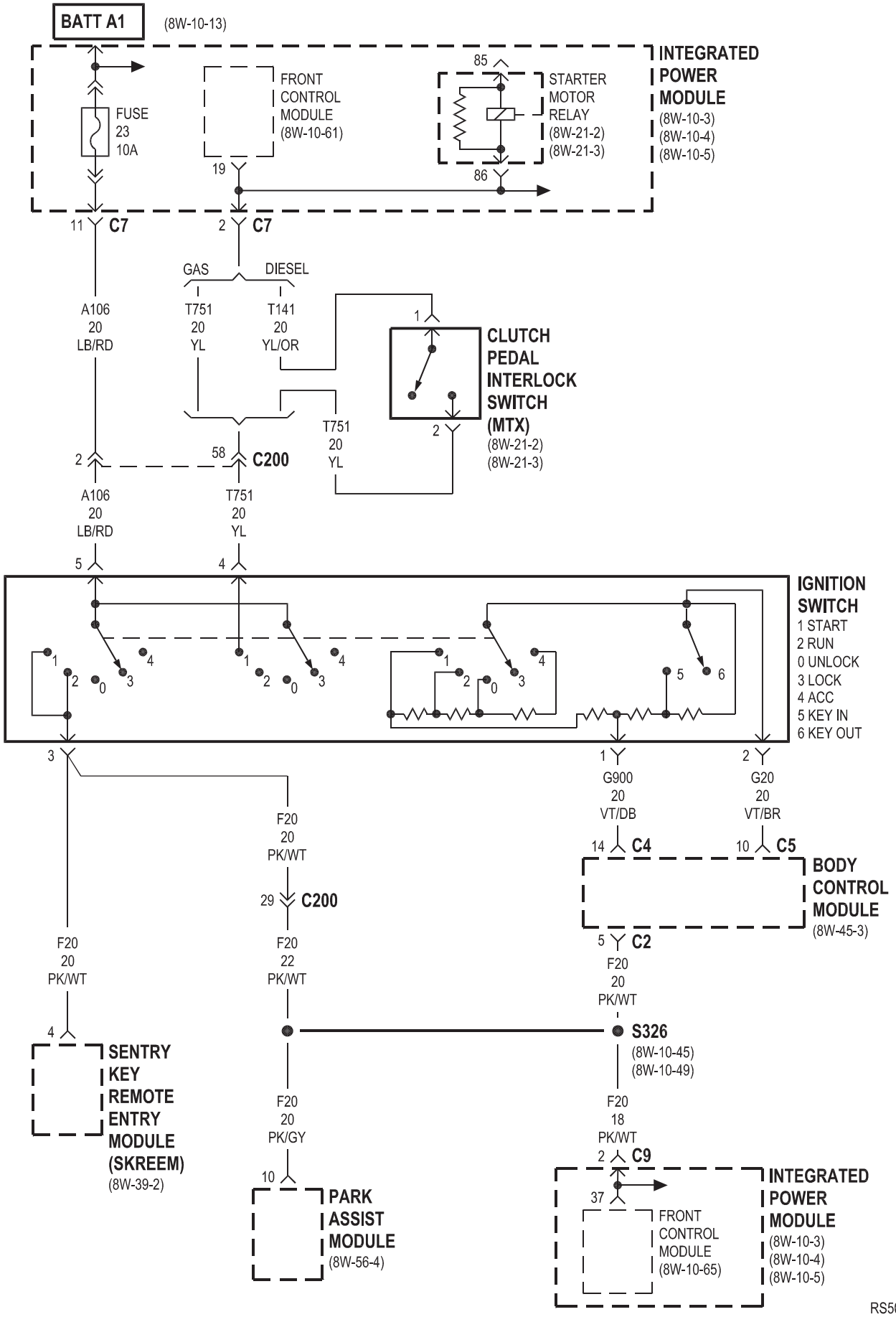
BATT A1
(8W-10-13)
INTEGRATED POWER MODULE
(8W-10-3)
(8W-10-4)
(8W-10-5)
FUSE 23 10A
FRONT CONTROL MODULE (8W-10-61)
STARTER MOTOR RELAY (8W-21-2) (8W-21-3)
85
86
19
11 C7
2 C7
GAS
DIESEL
A106 20 LB/RD
T751 20 YL
T141 20 YL/OR
CLUTCH PEDAL INTERLOCK SWITCH (MTX)
(8W-21-2)
(8W-21-3)
T751 20 YL
58 C200
2
A106 20 LB/RD
T751 20 YL
5
4
IGNITION SWITCH
1 START
2 RUN
0 UNLOCK
3 LOCK
4 ACC
5 KEY IN
6 KEY OUT
3
1
2
G900 20 VT/DB
G20 20 VT/BR
14 C4
10 C5
BODY CONTROL MODULE
(8W-45-3)
5 C2
F20 20 PK/WT
F20 20 PK/WT
29 C200
F20 22 PK/WT
S326
(8W-10-45)
(8W-10-49)
4
SENTRY KEY REMOTE ENTRY MODULE (SKREEM)
(8W-39-2)
F20 20 PK/GY
10
PARK ASSIST MODULE
(8W-56-4)
F20 18 PK/WT
2 C9
37
FRONT CONTROL MODULE (8W-10-65)
INTEGRATED POWER MODULE
(8W-10-3)
(8W-10-4)
(8W-10-5)

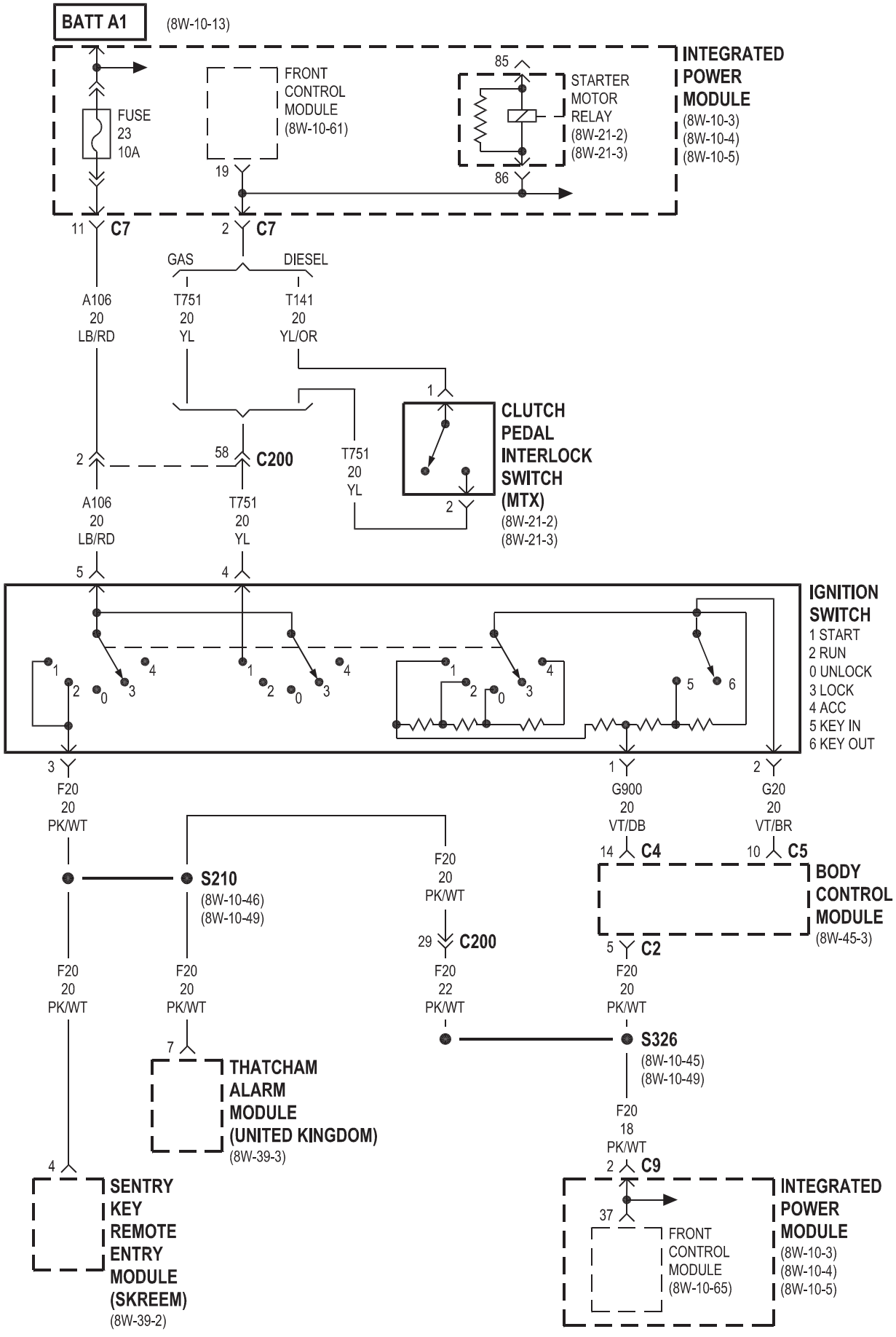
BATT A1
(8W-10-13)
FUSE 23 10A
FRONT CONTROL MODULE (8W-10-61)
STARTER MOTOR RELAY (8W-21-2) (8W-21-3)
INTEGRATED POWER MODULE (8W-10-3) (8W-10-4) (8W-10-5)
85
86
19
11 C7
2 C7
GAS
DIESEL
A106 20 LB/RD
T751 20 YL
T141 20 YL/OR
CLUTCH PEDAL INTERLOCK SWITCH (MTX) (8W-21-2) (8W-21-3)
58 C200
IGNITION SWITCH
1 START
2 RUN
0 UNLOCK
3 LOCK
4 ACC
5 KEY IN
6 KEY OUT
F20 20 PK/WT
G900 20 VT/DB
G20 20 VT/BR
S210 (8W-10-46) (8W-10-49)
BODY CONTROL MODULE (8W-45-3)
14 C4
10 C5
5 C2
29 C200
F20 22 PK/WT
S326 (8W-10-45) (8W-10-49)
THATCHAM ALARM MODULE (UNITED KINGDOM) (8W-39-3)
SENTRY KEY REMOTE ENTRY MODULE (SKREEM) (8W-39-2)
F20 18 PK/WT
2 C9
37
FRONT CONTROL MODULE (8W-10-65)
INTEGRATED POWER MODULE (8W-10-3) (8W-10-4) (8W-10-5)

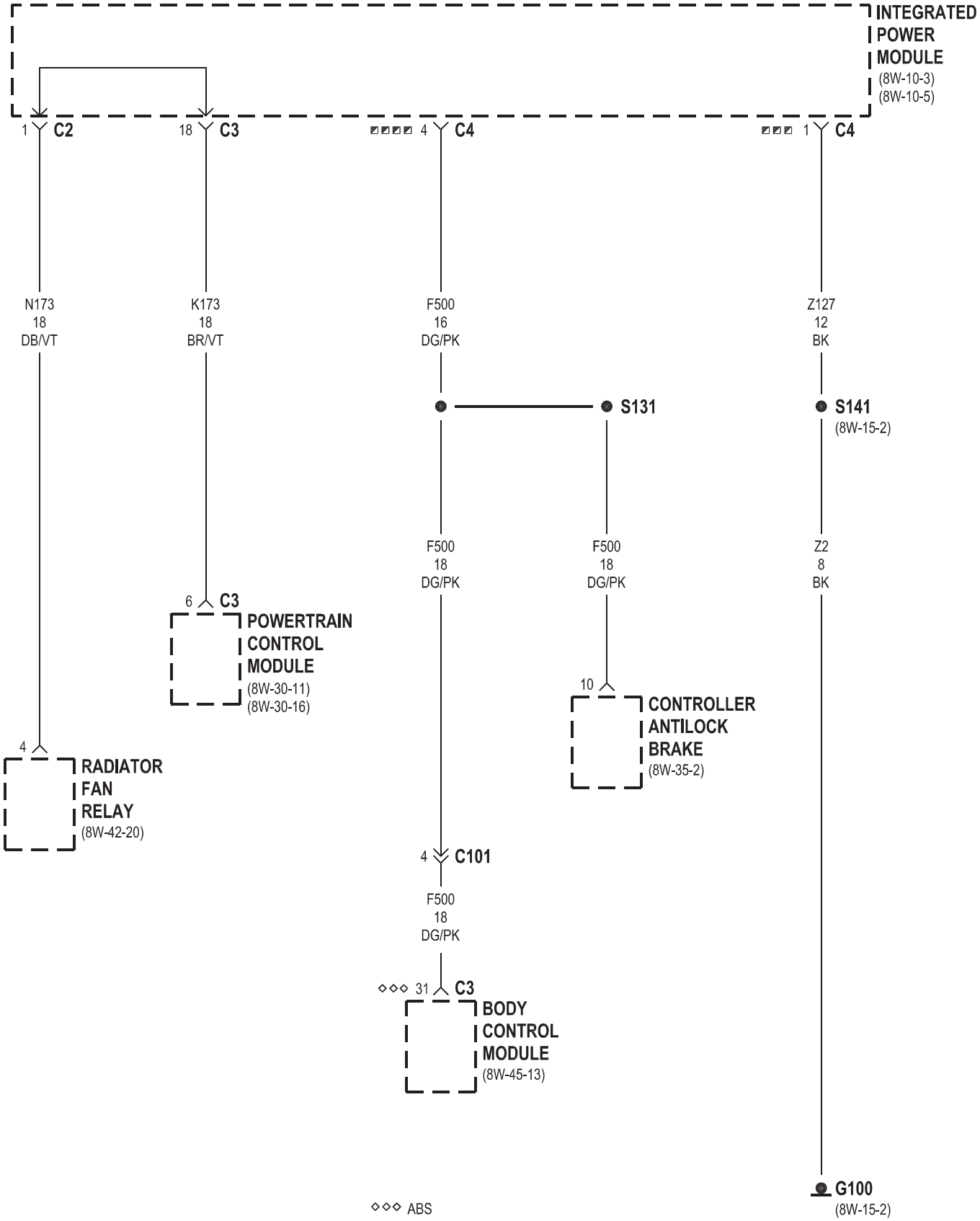
INTEGRATED POWER MODULE
(8W-10-3)
(8W-10-5)
1 C2
18 C3
◪◪◪◪ 4 C4
◪◪◪ 1 C4
N173
18
DB/VT
K173
18
BR/VT
F500
16
DG/PK
Z127
12
BK
S131
S141
(8W-15-2)
F500
18
DG/PK
F500
18
DG/PK
Z2
8
BK
6 C3
POWERTRAIN CONTROL MODULE
(8W-30-11)
(8W-30-16)
10
CONTROLLER ANTILOCK BRAKE
(8W-35-2)
4
RADIATOR FAN RELAY
(8W-42-20)
4 C101
F500
18
DG/PK
◇◇◇ 31 C3
BODY CONTROL MODULE
(8W-45-13)
G100
(8W-15-2)
◇◇◇ ABS
◪◪◪ ABS EXCEPT EXPORT/ASSY. PLANT EVAC & FILL
◪◪◪◪ ABS EXCEPT EXPORT/MTX/ASSY. PLANT EVAC & FILL

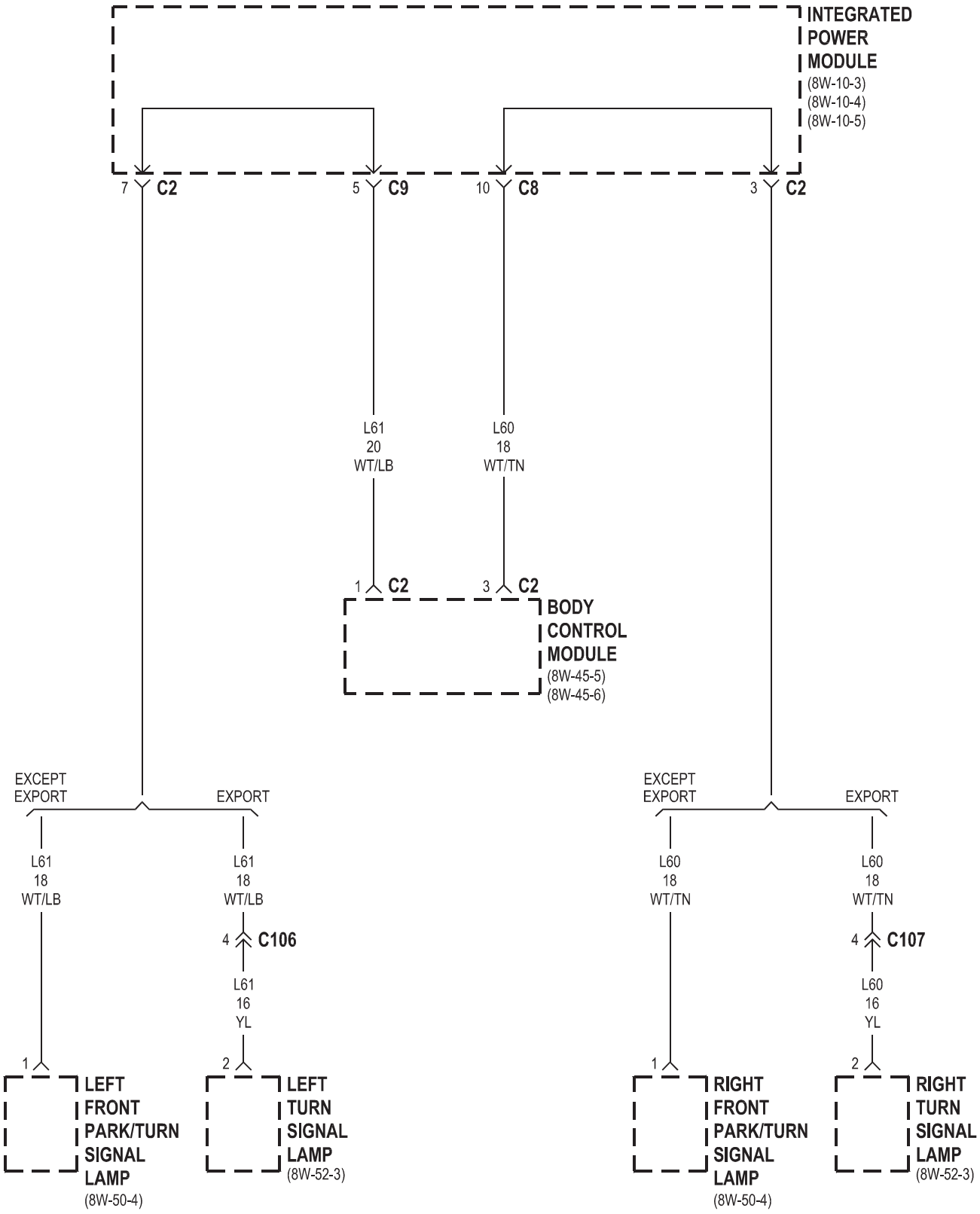
INTEGRATED POWER MODULE
(8W-10-3)
(8W-10-4)
(8W-10-5)
7 C2
5 C9
10 C8
3 C2
L61
20
WT/LB
L60
18
WT/TN
1 C2
3 C2
BODY CONTROL MODULE
(8W-45-5)
(8W-45-6)
EXCEPT EXPORT
EXPORT
EXCEPT EXPORT
EXPORT
L61
18
WT/LB
L61
18
WT/LB
4 C106
L61
16
YL
L60
18
WT/TN
L60
18
WT/TN
4 C107
L60
16
YL
1
2
1
2
LEFT FRONT PARK/TURN SIGNAL LAMP
(8W-50-4)
LEFT TURN SIGNAL LAMP
(8W-52-3)
RIGHT FRONT PARK/TURN SIGNAL LAMP
(8W-50-4)
RIGHT TURN SIGNAL LAMP
(8W-52-3)

FRONT CONTROL MODULE EXCEPT EXPORT

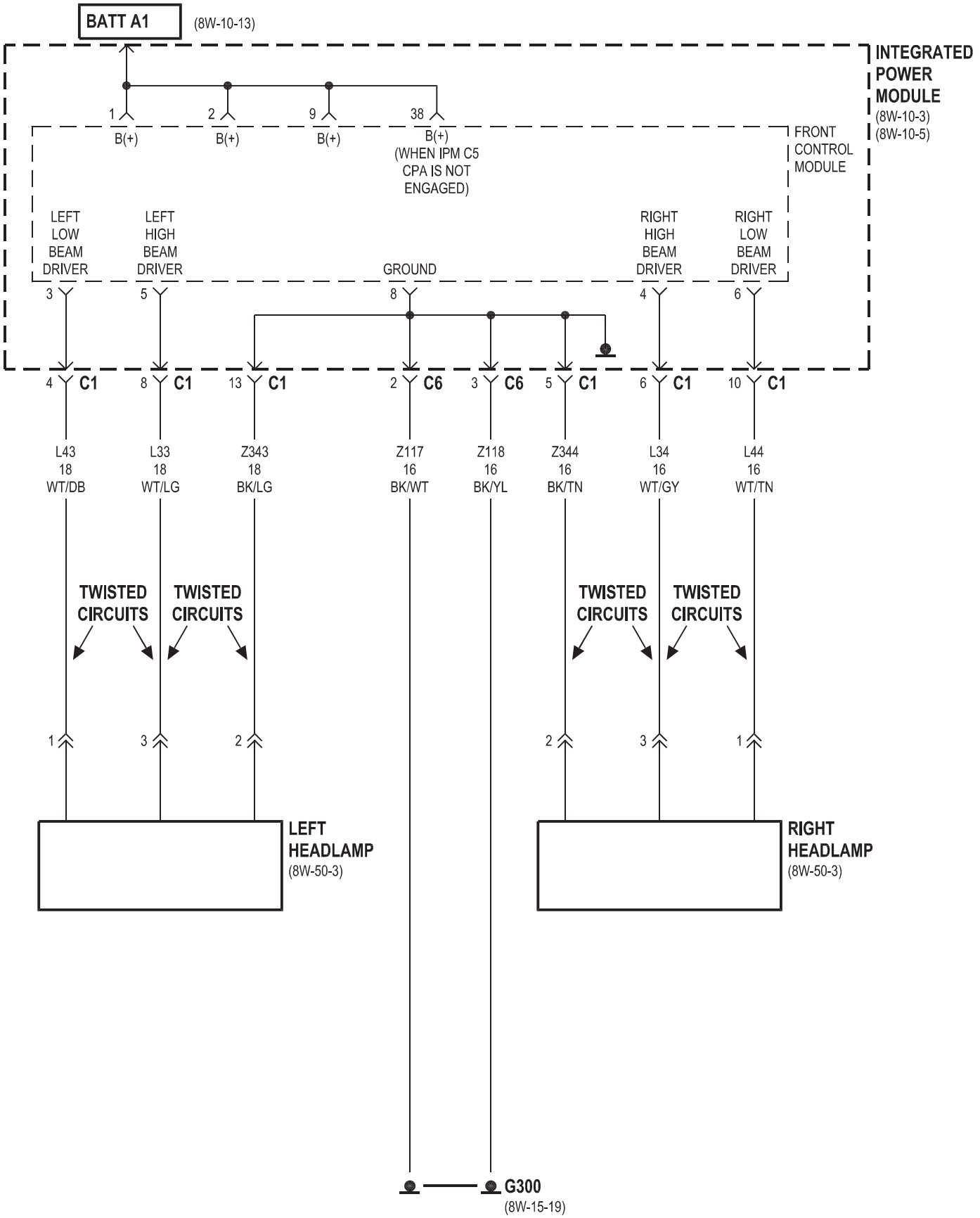

FRONT CONTROL MODULE EXPORT

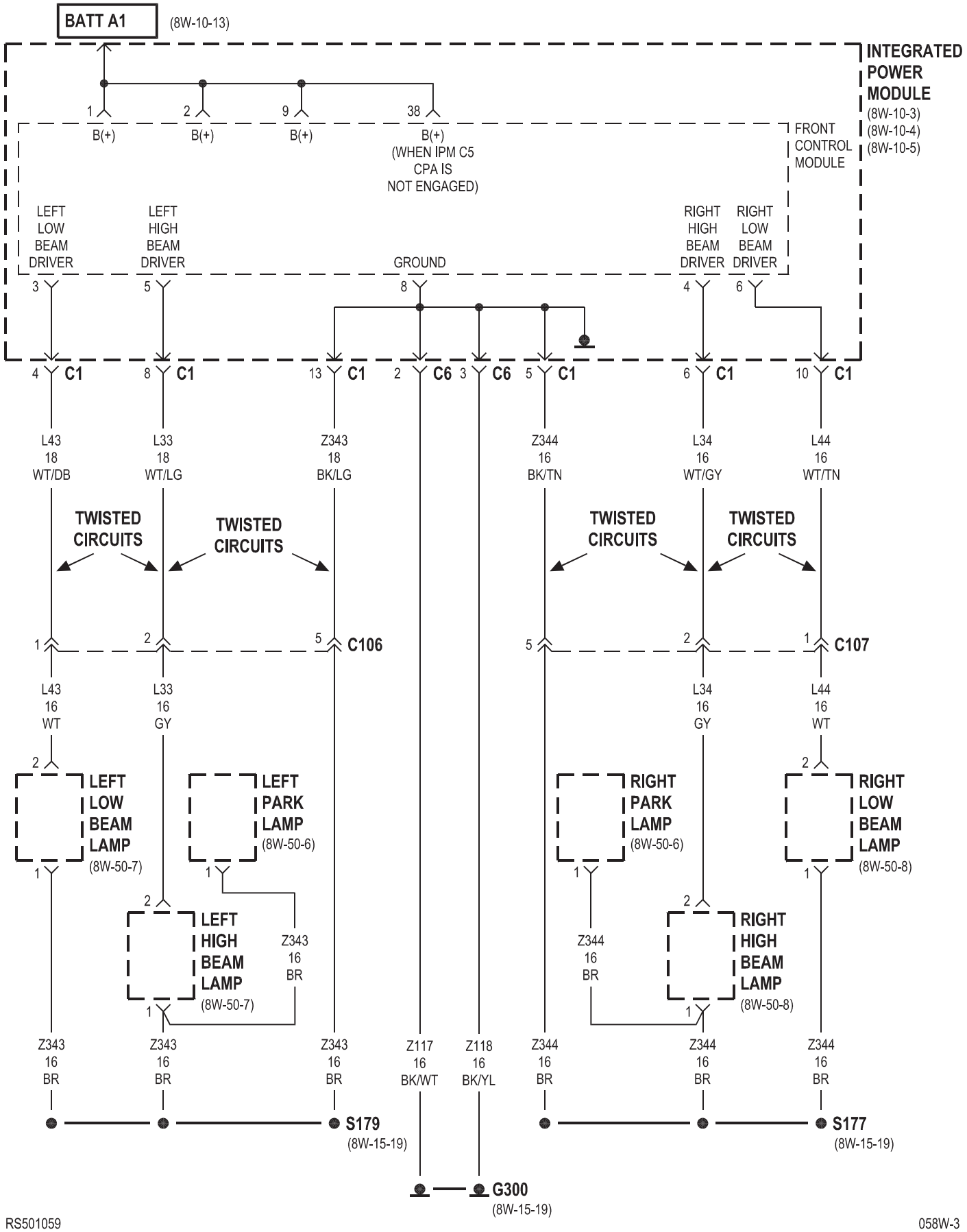

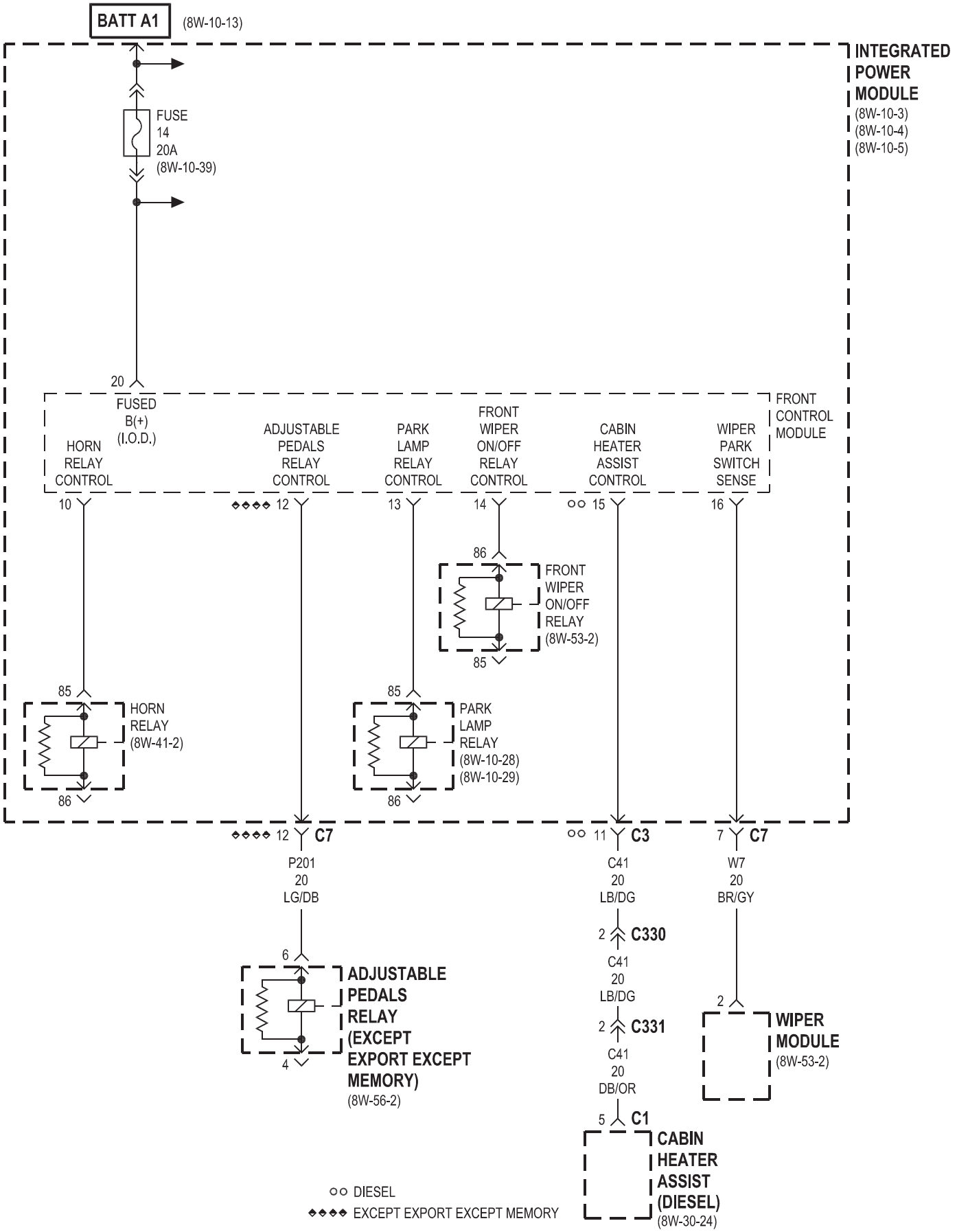
BATT A1
(8W-10-13)
INTEGRATED POWER MODULE
(8W-10-3)
(8W-10-4)
(8W-10-5)
FUSE 14 20A
(8W-10-39)
20
FUSED B(+) (I.O.D.)
FRONT CONTROL MODULE
HORN RELAY CONTROL
ADJUSTABLE PEDALS RELAY CONTROL
PARK LAMP RELAY CONTROL
FRONT WIPER ON/OFF RELAY CONTROL
CABIN HEATER ASSIST CONTROL
WIPER PARK SWITCH SENSE
10
12
13
14
15
16
86
85
FRONT WIPER ON/OFF RELAY
(8W-53-2)
HORN RELAY
(8W-41-2)
PARK LAMP RELAY
(8W-10-28)
(8W-10-29)
C7
C3
C7
P201 20 LG/DB
C41 20 LB/DG
W7 20 BR/GY
6
4
2
C330
C331
C41 20 LB/DG
C41 20 DB/OR
5
C1
ADJUSTABLE PEDALS RELAY (EXCEPT EXPORT EXCEPT MEMORY)
(8W-56-2)
WIPER MODULE
(8W-53-2)
CABIN HEATER ASSIST (DIESEL)
(8W-30-24)
DIESEL
EXCEPT EXPORT EXCEPT MEMORY

FRONT CONTROL MODULE

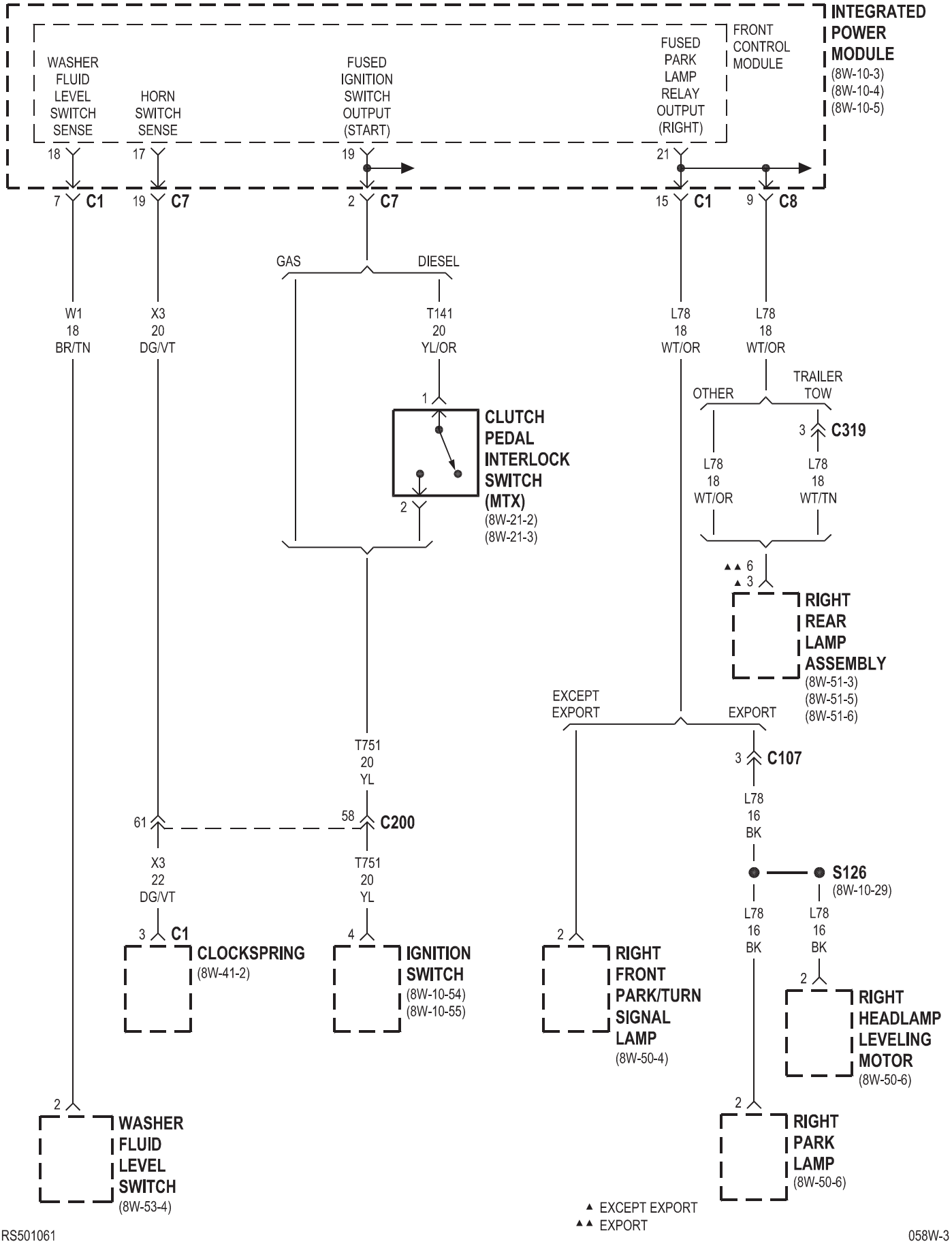

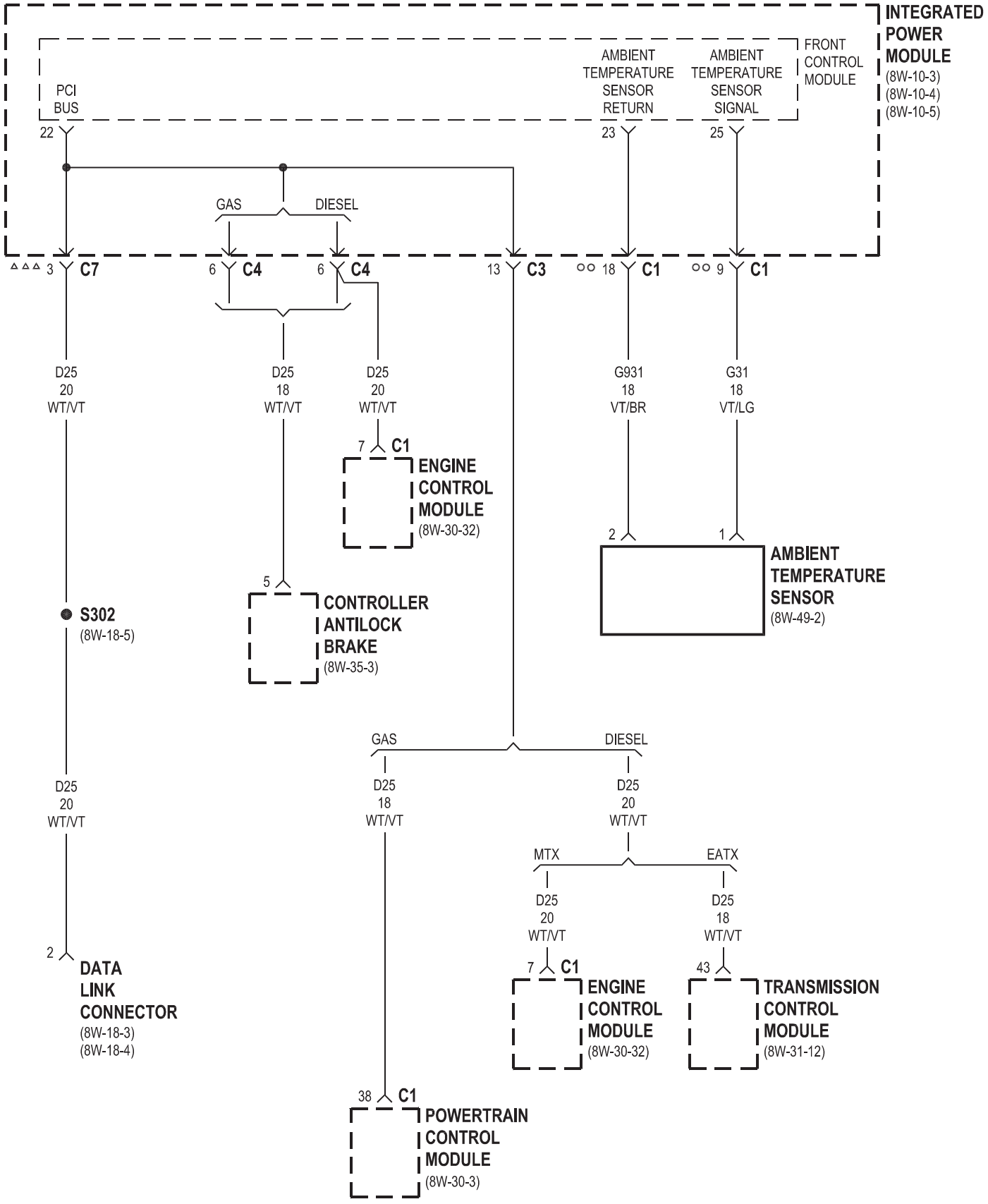
INTEGRATED POWER MODULE
(8W-10-3)
(8W-10-4)
(8W-10-5)
FRONT CONTROL MODULE
PCI BUS
22
AMBIENT TEMPERATURE SENSOR RETURN
23
AMBIENT TEMPERATURE SENSOR SIGNAL
25
GAS
DIESEL
△△△ 3 C7
6 C4
6 C4
13 C3
○○ 18 C1
○○ 9 C1
D25 20 WT/VT
D25 18 WT/VT
D25 20 WT/VT
G931 18 VT/BR
G31 18 VT/LG
7 C1
ENGINE CONTROL MODULE
(8W-30-32)
2
1
AMBIENT TEMPERATURE SENSOR
(8W-49-2)
5
CONTROLLER ANTILOCK BRAKE
(8W-35-3)
S302
(8W-18-5)
GAS
DIESEL
D25 20 WT/VT
D25 18 WT/VT
D25 20 WT/VT
MTX
EATX
D25 20 WT/VT
D25 18 WT/VT
2
DATA LINK CONNECTOR
(8W-18-3)
(8W-18-4)
7 C1
ENGINE CONTROL MODULE
(8W-30-32)
43
TRANSMISSION CONTROL MODULE
(8W-31-12)
38 C1
POWERTRAIN CONTROL MODULE
(8W-30-3)
○○ DIESEL
△△△ MEMORY

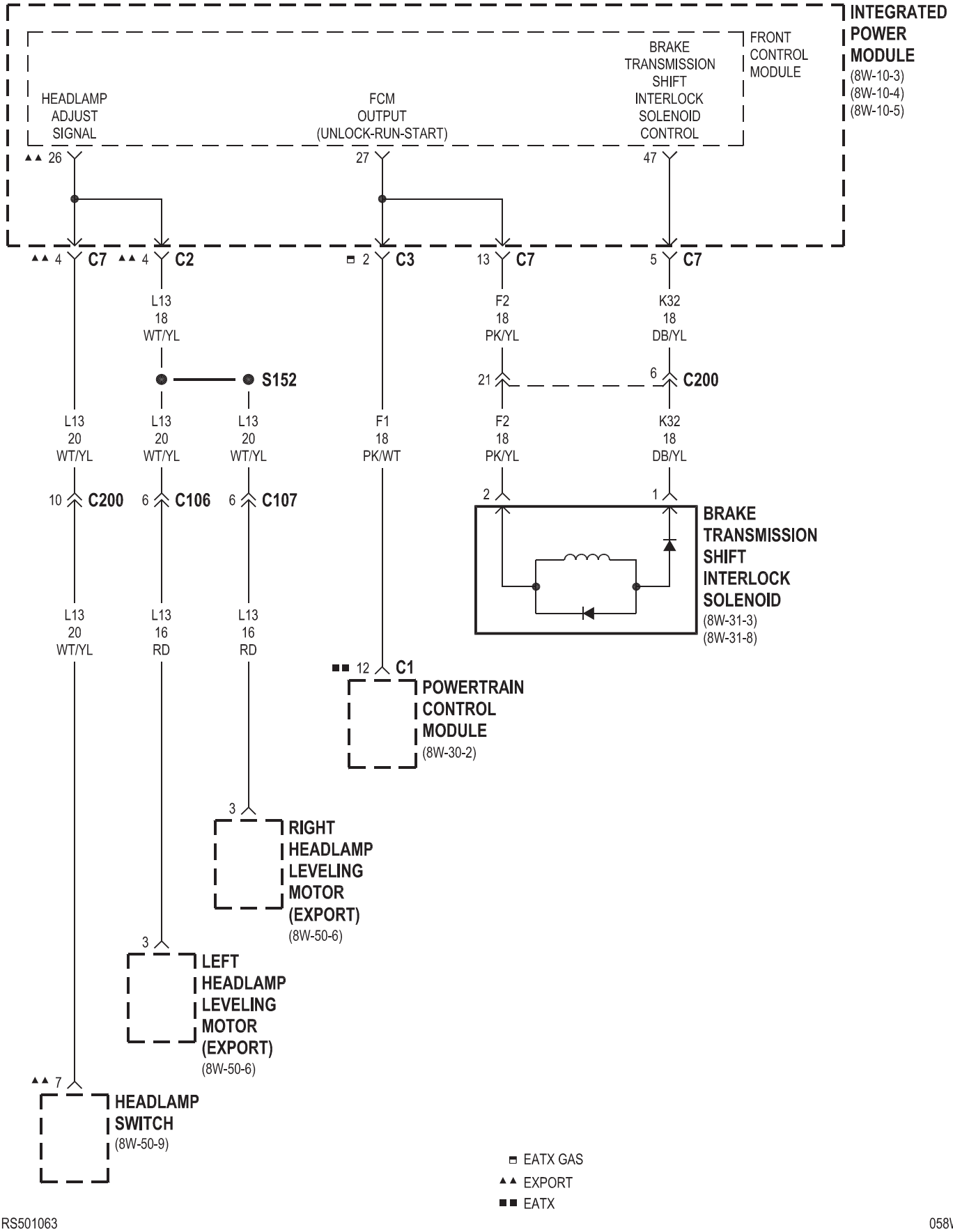
INTEGRATED POWER MODULE
(8W-10-3)
(8W-10-4)
(8W-10-5)
FRONT CONTROL MODULE
HEADLAMP ADJUST SIGNAL
FCM OUTPUT (UNLOCK-RUN-START)
BRAKE TRANSMISSION SHIFT INTERLOCK SOLENOID CONTROL
▲▲ 26
27
47
▲▲ 4 C7
▲▲ 4 C2
2 C3
13 C7
5 C7
L13 18 WT/YL
F2 18 PK/YL
K32 18 DB/YL
S152
21
6 C200
L13 20 WT/YL
L13 20 WT/YL
L13 20 WT/YL
F1 18 PK/WT
F2 18 PK/YL
K32 18 DB/YL
10 C200
6 C106
6 C107
2
1
BRAKE TRANSMISSION SHIFT INTERLOCK SOLENOID
(8W-31-3)
(8W-31-8)
L13 20 WT/YL
L13 16 RD
L13 16 RD
■■ 12 C1
POWERTRAIN CONTROL MODULE
(8W-30-2)
3
RIGHT HEADLAMP LEVELING MOTOR (EXPORT)
(8W-50-6)
3
LEFT HEADLAMP LEVELING MOTOR (EXPORT)
(8W-50-6)
▲▲ 7
HEADLAMP SWITCH
(8W-50-9)
▫ EATX GAS
▲▲ EXPORT
■■ EATX

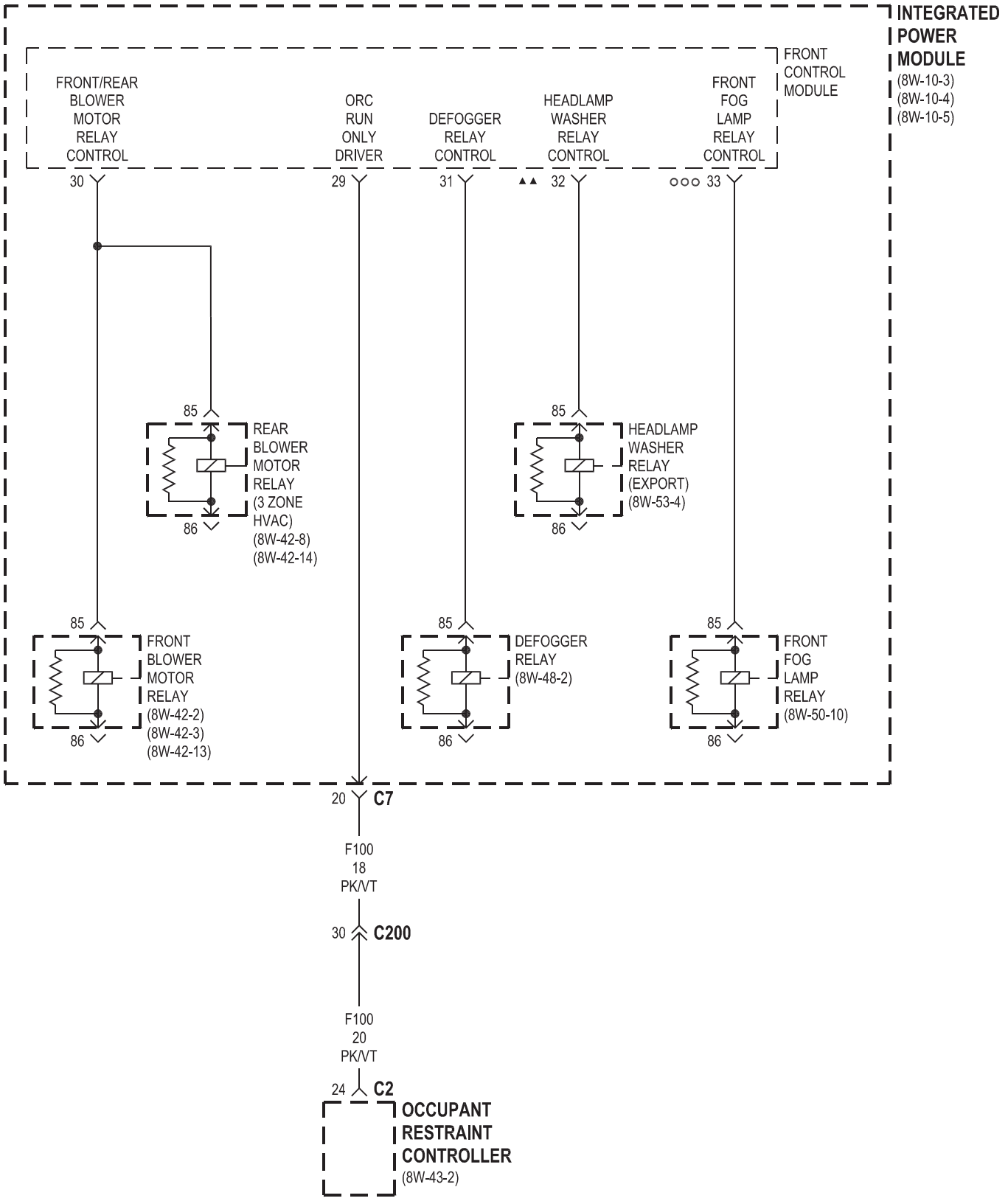
INTEGRATED POWER MODULE
(8W-10-3)
(8W-10-4)
(8W-10-5)
FRONT CONTROL MODULE
FRONT/REAR BLOWER MOTOR RELAY CONTROL
ORC RUN ONLY DRIVER
DEFOGGER RELAY CONTROL
HEADLAMP WASHER RELAY CONTROL
FRONT FOG LAMP RELAY CONTROL
30
29
31
▲▲ 32
○○○ 33
85
86
REAR BLOWER MOTOR RELAY (3 ZONE HVAC) (8W-42-8) (8W-42-14)
HEADLAMP WASHER RELAY (EXPORT) (8W-53-4)
FRONT BLOWER MOTOR RELAY (8W-42-2) (8W-42-3) (8W-42-13)
DEFOGGER RELAY (8W-48-2)
FRONT FOG LAMP RELAY (8W-50-10)
20 C7
F100 18 PK/VT
30 C200
F100 20 PK/VT
24 C2
OCCUPANT RESTRAINT CONTROLLER
(8W-43-2)
○○○ FOG LAMPS
▲▲ EXPORT

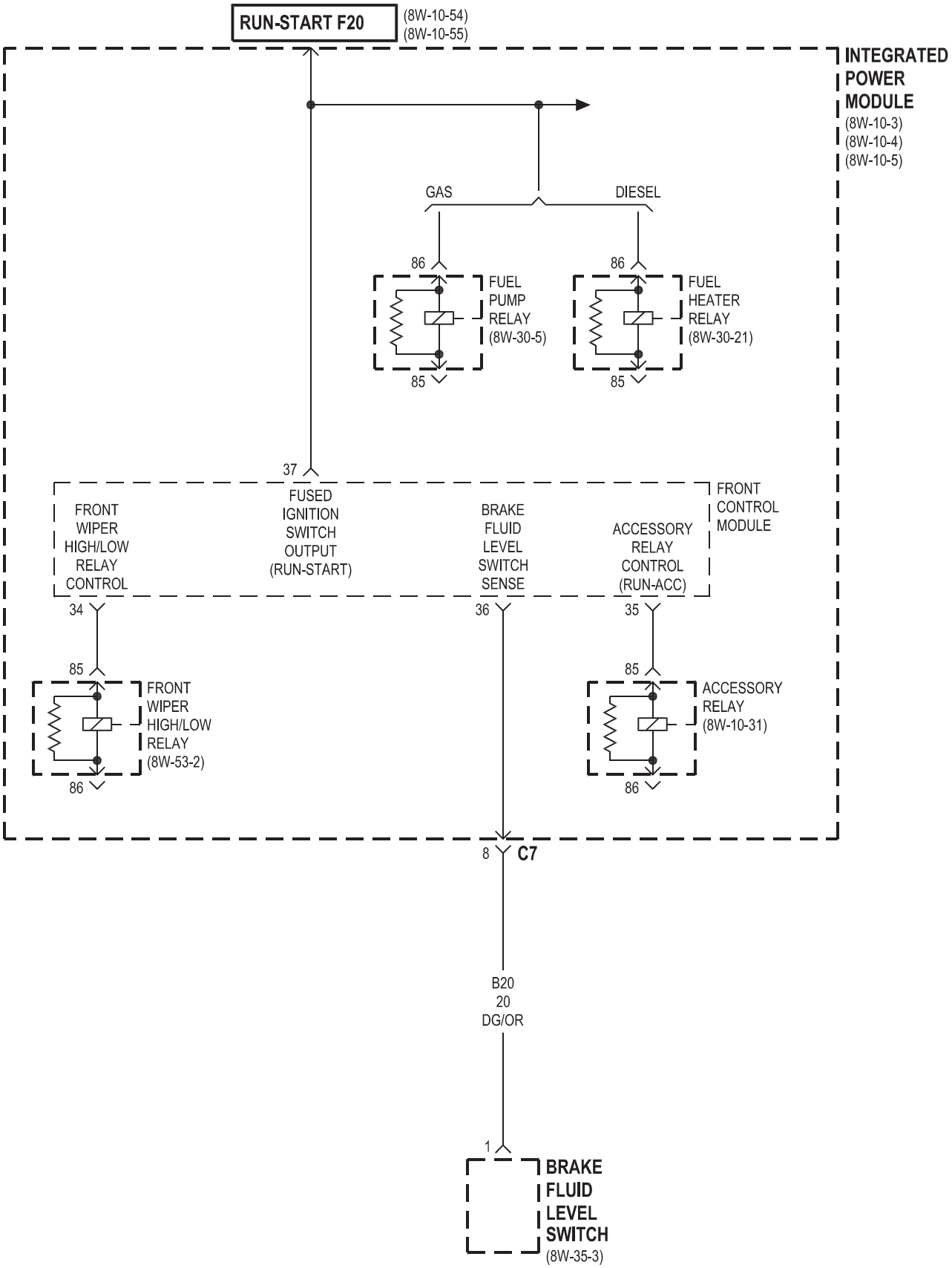
RUN-START F20
(8W-10-54)
(8W-10-55)
INTEGRATED POWER MODULE
(8W-10-3)
(8W-10-4)
(8W-10-5)
GAS
DIESEL
86
85
FUEL PUMP RELAY
(8W-30-5)
FUEL HEATER RELAY
(8W-30-21)
37
FRONT CONTROL MODULE
FRONT WIPER HIGH/LOW RELAY CONTROL
FUSED IGNITION SWITCH OUTPUT (RUN-START)
BRAKE FLUID LEVEL SWITCH SENSE
ACCESSORY RELAY CONTROL (RUN-ACC)
34
36
35
FRONT WIPER HIGH/LOW RELAY
(8W-53-2)
ACCESSORY RELAY
(8W-10-31)
8
C7
B20
20
DG/OR
1
BRAKE FLUID LEVEL SWITCH
(8W-35-3)

FRONT CONTROL MODULE

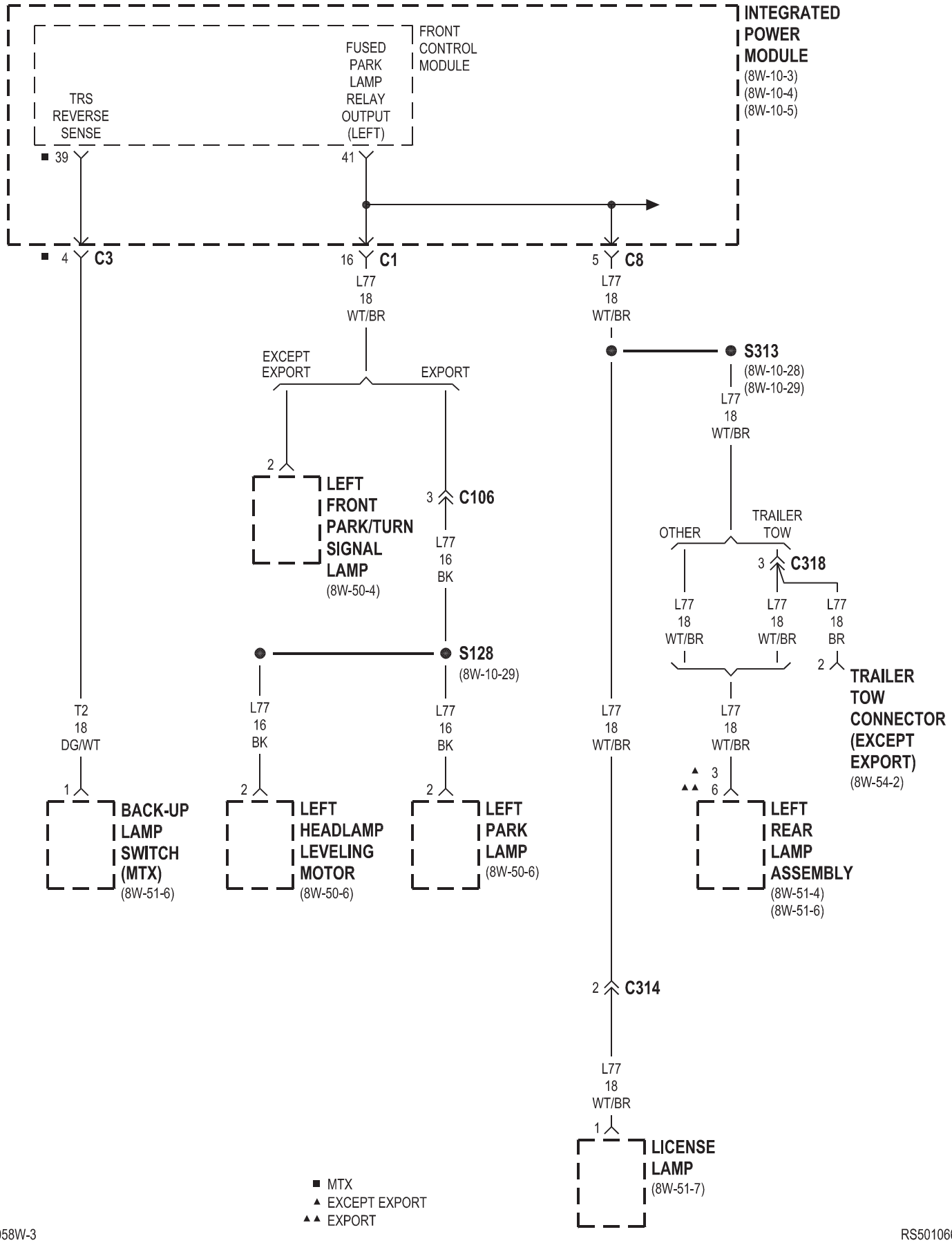

FRONT CONTROL MODULE

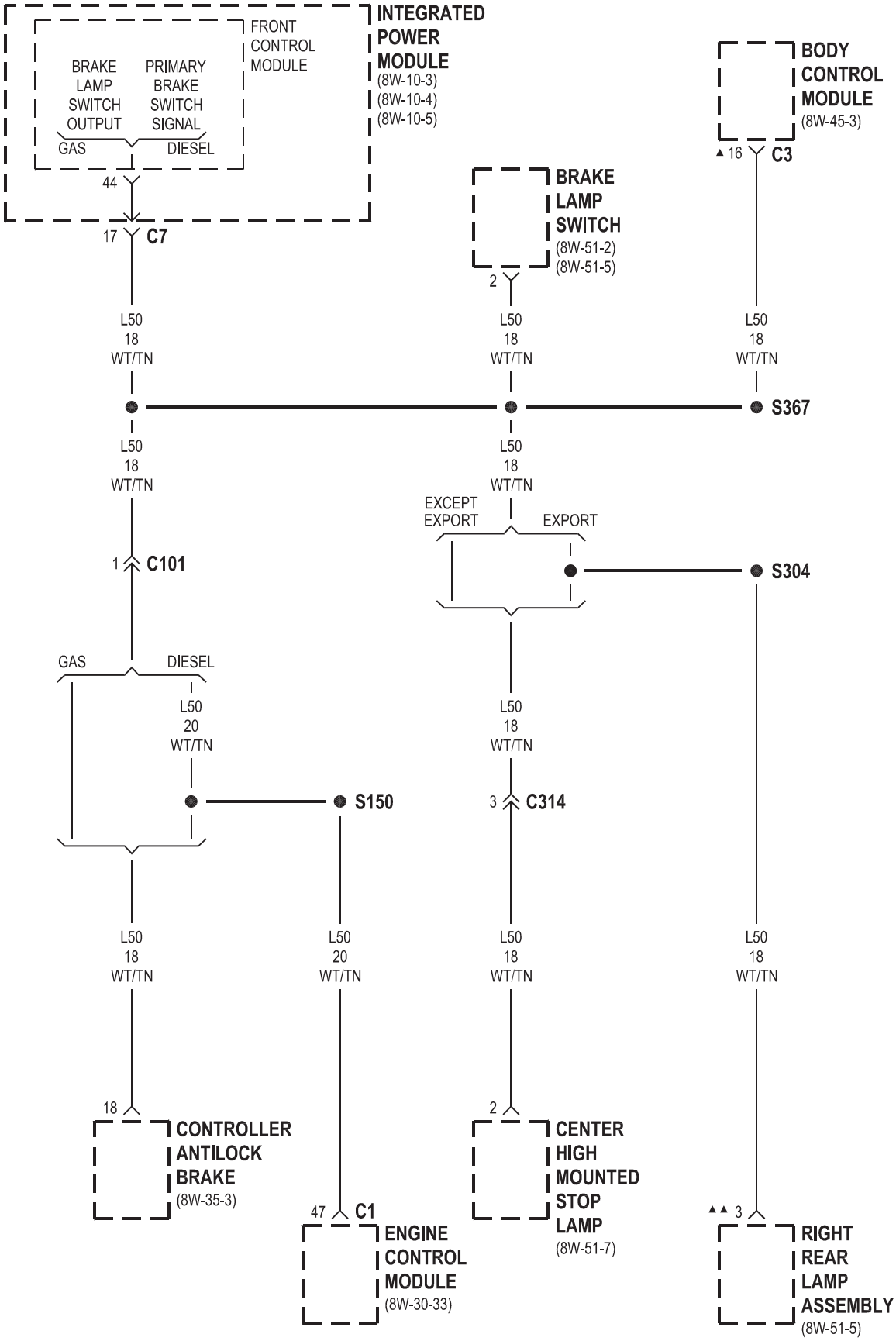

▲ EXCEPT EXPORT
▲▲ EXPORT

FRONT CONTROL MODULE

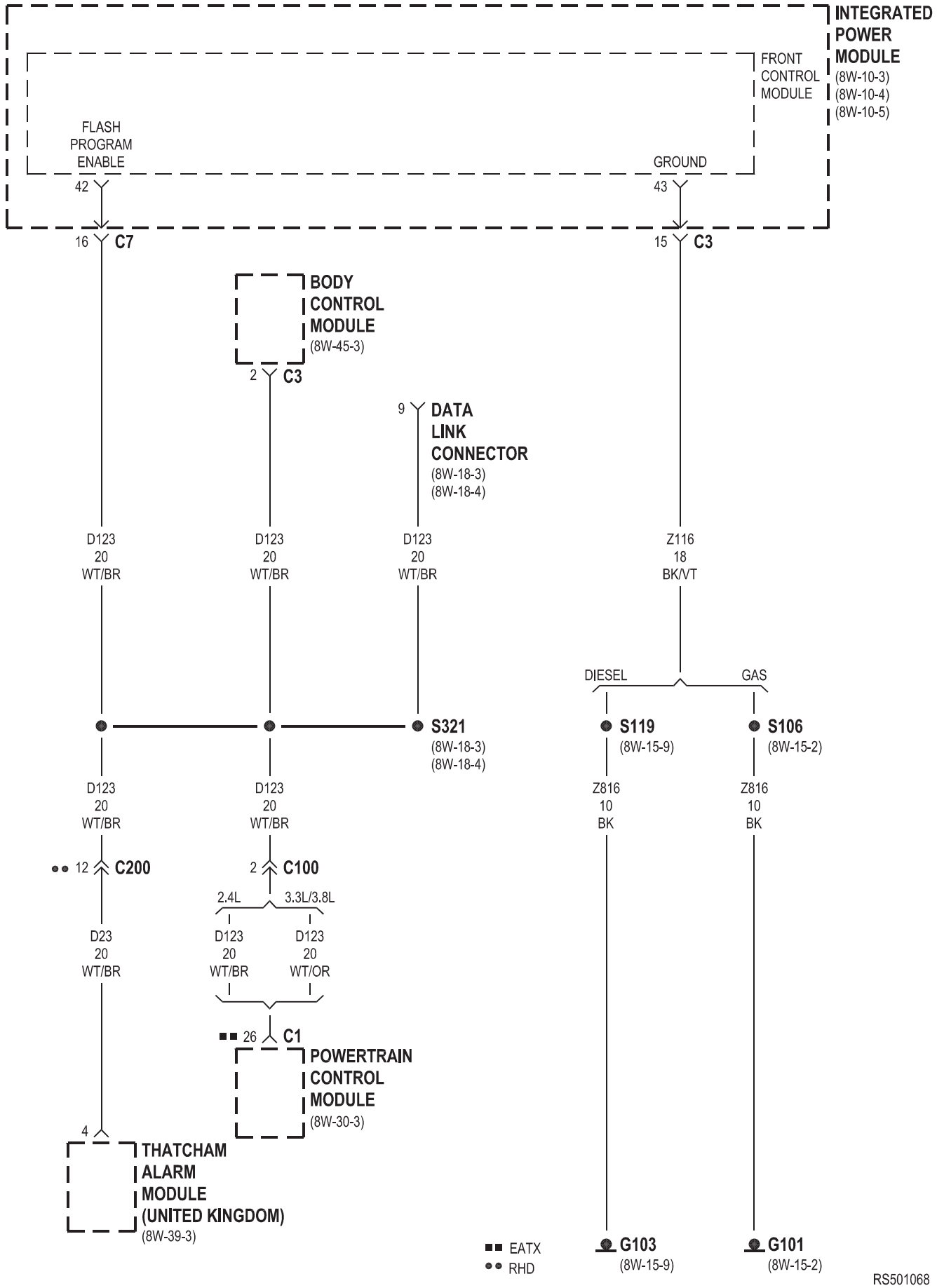

FRONT CONTROL MODULE

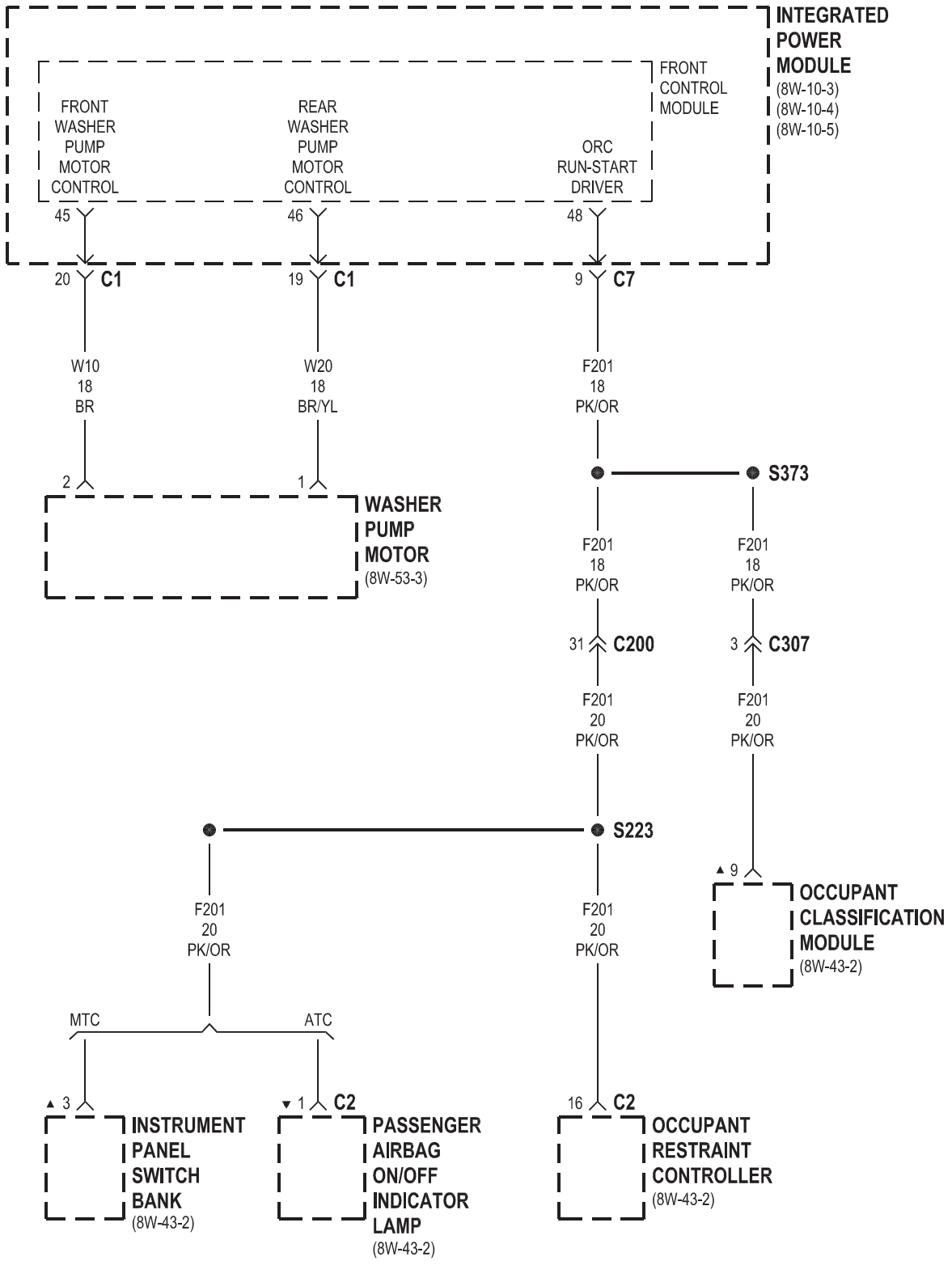

▲ EXCEPT EXPORT
▼ OCCUPANT SENSING

8W-15 GROUND DISTRIBUTION

Component	Page
A/C Compressor Clutch	8W-15-2, 9
A/C-Heater Control	8W-15-10, 12
Adjustable Pedals Switch	8W-15-11
Amplifier	8W-15-27
Auto Temp Control	8W-15-10
Back-Up Lamp Switch	8W-15-2, 4
Battery	8W-15-2, 3, 4
Body Control Module	8W-15-24
Brake Fluid Level Switch	8W-15-18
Brake Lamp Switch	8W-15-18
Cabin Heater Assist	8W-15-9
CD Changer	8W-15-13
Center High Mounted Stop Lamp	8W-15-30
Clutch Pedal Interlock Switch	8W-15-18
Clutch Pedal Upstop Switch	8W-15-19
Controller Antilock Brake	8W-15-2, 4
Crank Case Ventilation Heater	8W-15-9
Crankshaft Position Sensor	8W-15-4
Data Link Connector	8W-15-3, 4, 18
Dosing Pump	8W-15-9
Driver Door Courtesy Lamp	8W-15-15, 21
Driver Door Lock Switch	8W-15-15, 21
Driver Heated Seat Cushion	8W-15-17
Driver Heated Seat Module	8W-15-17
Driver Power Seat Switch	8W-15-17
Driver Power Window Switch	8W-15-15, 21
DVD/CD Changer	8W-15-11
EGR Solenoid	8W-15-3
Engine Control Module	8W-15-4
Floor Console Lamp	8W-15-28
Floor Console Power Outlet	8W-15-28
Front Blower Module	8W-15-12
Front Cigar Lighter	8W-15-10
Front Control Module	8W-15-2, 8, 9, 19
Front Reading Lamps/Switch	8W-15-22
Fuel Heater	8W-15-28
Fuel Heater Relay	8W-15-4
Fuel Pump Module	8W-15-28
G100	8W-15-2, 4
G101	8W-15-2, 4
G102	8W-15-5, 6, 7
G103	8W-15-9
G200	8W-15-10, 11, 12
G201	8W-15-13
G202	8W-15-13
G300	8W-15-12, 14, 16, 17, 18, 19
G301	8W-15-20, 21, 22, 24, 25
G302	8W-15-26, 27, 28
G303	8W-15-28, 29, 30
Generator	8W-15-2
Hands Free Module	8W-15-11
Headlamp Switch	8W-15-10
Headlamp Washer Pump Motor	8W-15-7
High Note Horn	8W-15-6
Hood Ajar Switch	8W-15-19
Horn Switch	8W-15-12
Instrument Cluster	8W-15-10
Instrument Panel Switch Bank	8W-15-10
Integrated Power Module	8W-15-2, 3, 4, 8, 9, 19
Left B-Pillar Switch	8W-15-18
Left Cinch/Release Motor	8W-15-14
Left Cylinder Lock Switch	8W-15-15, 16
Left Fog Lamp	8W-15-6
Left Front Door Ajar Switch	8W-15-16
Left Front Door Lock Motor/Ajar Switch	8W-15-15, 16
Left Front Park/Turn Signal Lamp	8W-15-6
Left Full Open Switch	8W-15-14
Left Headlamp	8W-15-19
Left Headlamp Leveling Motor	8W-15-7
Left High Beam Lamp	8W-15-8, 19
Left Liftgate Flood Lamp	8W-15-29
Left Low Beam Lamp	8W-15-8, 19
Left Mid Reading Lamp	8W-15-23
Left Park Lamp	8W-15-8, 19
Left Power Mirror	8W-15-12
Left Rear Lamp Assembly	8W-15-28
Left Rear Reading Lamp	8W-15-23
Left Sliding Door Control Module	8W-15-14
Left Sliding Door Latch Sensing Switch	8W-15-14
Left Sliding Door Lock Motor	8W-15-14
Left Sliding Door Lock Motor/Ajar Switch	8W-15-14
Left Sliding Door Motor	8W-15-14

Component	Page
Left Turn Signal Lamp	8W-15-19
Left Visor/Vanity Lamp	8W-15-23
License Lamp	8W-15-26, 29
Lift Pump Motor	8W-15-28
Liftgate Ajar Switch	8W-15-30
Liftgate Cinch/Release Motor	8W-15-26, 30
Liftgate Right Pinch Sensor	8W-15-26
Memory Seat/Mirror/Adjustable Pedals Module	8W-15-17
Natural Vacuum Leak Detection Assembly	8W-15-2, 3
Occupant Classification Module	8W-15-24
Occupant Restraint Controller	8W-15-13
Overhead Console	8W-15-22
Oxygen Sensor 1/1 Upstream	8W-15-3
Oxygen Sensor 1/2 Downstream	8W-15-3
Park Assist Display	8W-15-28
Park Assist Module	8W-15-28
Passenger Door Courtesy Lamp	8W-15-16, 21
Passenger Door Lock Switch	8W-15-16, 21
Passenger Heated Seat Back	8W-15-25
Passenger Heated Seat Cushion	8W-15-25
Passenger Heated Seat Module	8W-15-25
Passenger Power Seat Switch	8W-15-25
Power Folding Mirror Switch	8W-15-12
Power Liftgate Module	8W-15-26, 28
Power Liftgate Motor	8W-15-26
Power Mirror Switch	8W-15-12
Power Outlet	8W-15-10
Power Window Switch	8W-15-15
Powertrain Control Module	8W-15-3
Radiator Fan No. 1	8W-15-5
Radiator Fan No. 2	8W-15-5
Radiator Fan Relay	8W-15-5
Radiator Fan Relay No. 3	8W-15-5
Radio	8W-15-13
Rear Auto Temp Control Switch	8W-15-18
Rear Blower Front Control Switch	8W-15-12
Rear Blower Motor Power Module	8W-15-28
Rear Blower Rear Control Switch	8W-15-18
Rear Dome Lamp	8W-15-22, 23
Rear Power Outlet	8W-15-28
Rear View Mirror	8W-15-11, 22
Rear Window Defogger Grid	8W-15-30
Rear Wiper Motor	8W-15-29
Right B-Pillar Switch	8W-15-24
Right Cinch/Release Motor	8W-15-20
Right Cylinder Lock Switch	8W-15-21
Right Fog Lamp	8W-15-6
Right Front Door Ajar Switch	8W-15-21
Right Front Door Lock Motor/Ajar Switch	8W-15-21
Right Front Park/Turn Signal Lamp	8W-15-6
Right Full Open Switch	8W-15-20
Right Headlamp	8W-15-19
Right Headlamp Leveling Motor	8W-15-7
Right High Beam Lamp	8W-15-8, 19
Right Liftgate Flood Lamp	8W-15-29
Right Low Beam Lamp	8W-15-8, 19
Right Mid Reading Lamp	8W-15-23
Right Park Lamp	8W-15-8, 19
Right Power Mirror	8W-15-11, 12
Right Rear Lamp Assembly	8W-15-27, 28
Right Rear Reading Lamp	8W-15-23
Right Sliding Door Control Module	8W-15-20
Right Sliding Door Latch Sensing Switch	8W-15-20
Right Sliding Door Lock Motor	8W-15-20
Right Sliding Door Lock Motor/Ajar Switch	8W-15-20
Right Sliding Door Motor	8W-15-20
Right Turn Signal Lamp	8W-15-19
Right Visor/Vanity Lamp	8W-15-23
Sentry Key Remote Entry Module	8W-15-11
Siren	8W-15-11
Speed Control Servo	8W-15-2
Sunroof Module	8W-15-27
Sunroof Switch	8W-15-23
Thatcham Alarm Module	8W-15-11
Traction Control Switch	8W-15-11
Trailer Tow Connector	8W-15-27
Transmission Control Module	8W-15-4
Transmission Control Relay	8W-15-3, 4
Washer Fluid Level Switch	8W-15-5
Wiper Module	8W-15-18

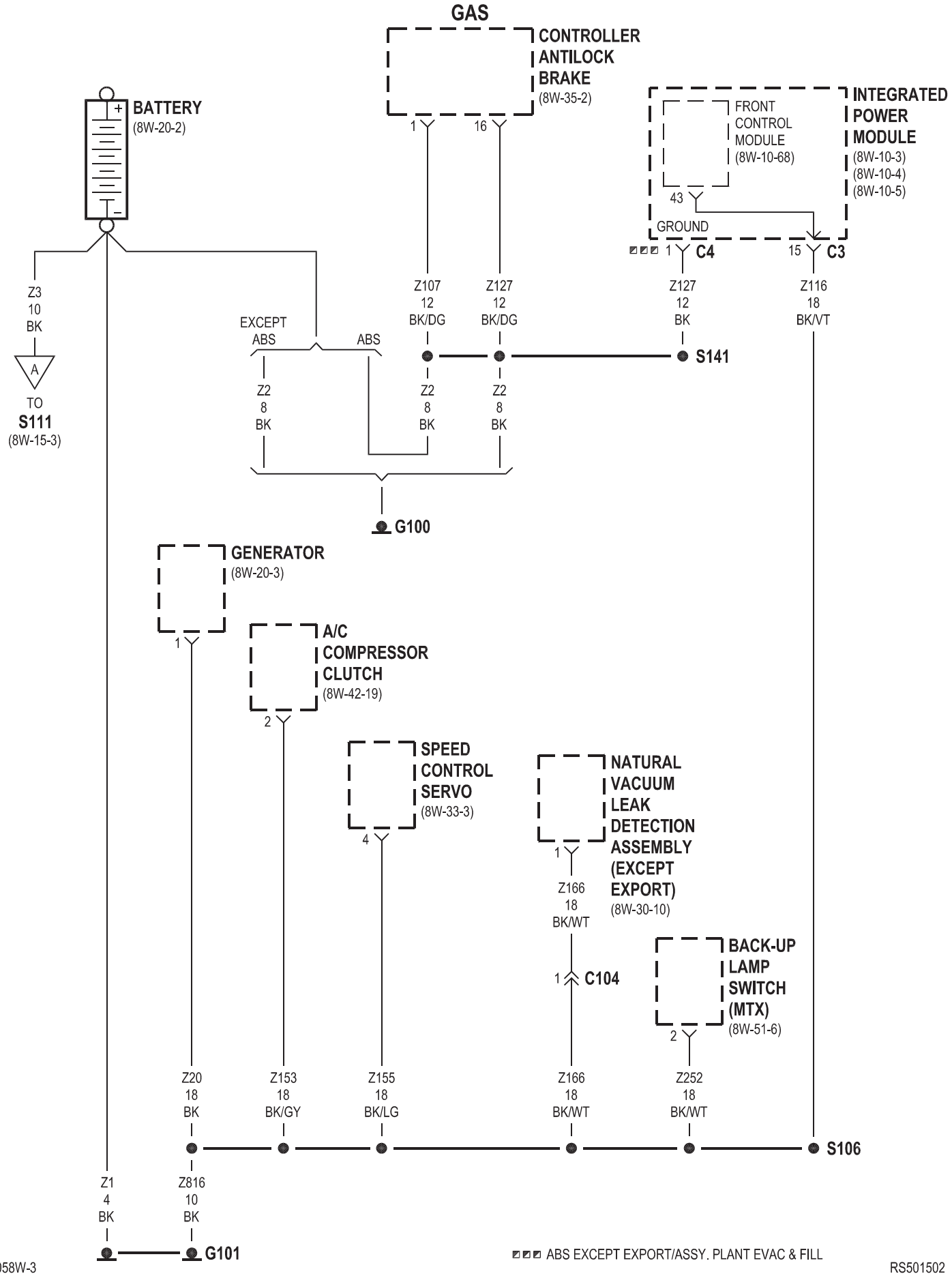
GAS
CONTROLLER ANTILOCK BRAKE (8W-35-2)
1
16
BATTERY (8W-20-2)
INTEGRATED POWER MODULE (8W-10-3) (8W-10-4) (8W-10-5)
FRONT CONTROL MODULE (8W-10-68)
43
GROUND
1 C4
15 C3
Z3 10 BK
A
TO S111 (8W-15-3)
EXCEPT ABS
ABS
Z107 12 BK/DG
Z127 12 BK/DG
Z127 12 BK
Z116 18 BK/VT
S141
Z2 8 BK
Z2 8 BK
Z2 8 BK
G100
GENERATOR (8W-20-3)
1
A/C COMPRESSOR CLUTCH (8W-42-19)
2
SPEED CONTROL SERVO (8W-33-3)
4
NATURAL VACUUM LEAK DETECTION ASSEMBLY (EXCEPT EXPORT) (8W-30-10)
1
Z166 18 BK/WT
1 C104
BACK-UP LAMP SWITCH (MTX) (8W-51-6)
2
Z20 18 BK
Z153 18 BK/GY
Z155 18 BK/LG
Z166 18 BK/WT
Z252 18 BK/WT
S106
Z1 4 BK
Z816 10 BK
G101
◪◪◪ ABS EXCEPT EXPORT/ASSY. PLANT EVAC & FILL

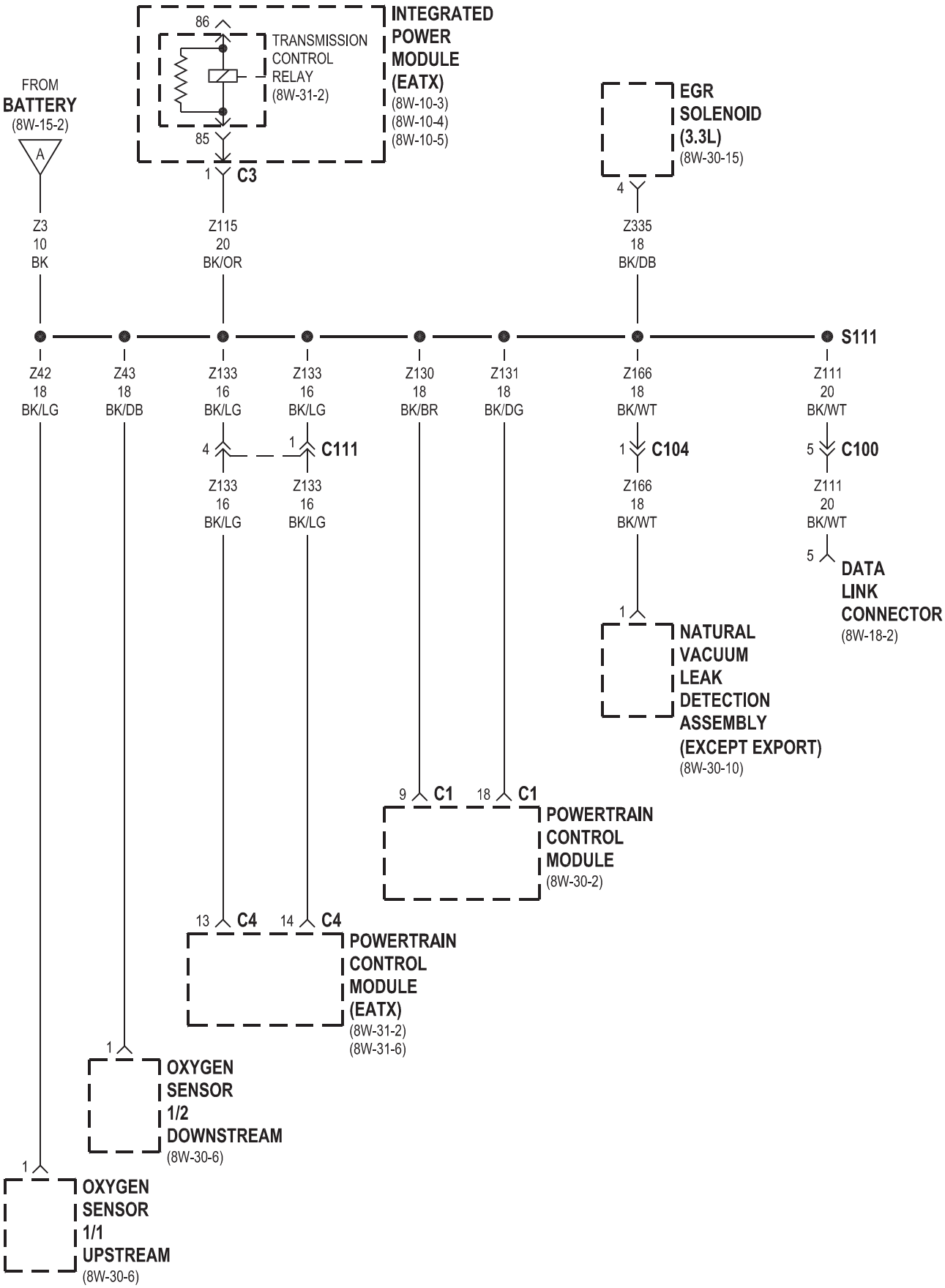
INTEGRATED POWER MODULE (EATX)
(8W-10-3)
(8W-10-4)
(8W-10-5)
86
TRANSMISSION CONTROL RELAY
(8W-31-2)
85
1 C3
FROM BATTERY
(8W-15-2)
A
Z3
10
BK
Z115
20
BK/OR
EGR SOLENOID (3.3L)
(8W-30-15)
4
Z335
18
BK/DB
S111
Z42
18
BK/LG
Z43
18
BK/DB
Z133
16
BK/LG
Z133
16
BK/LG
Z130
18
BK/BR
Z131
18
BK/DG
Z166
18
BK/WT
Z111
20
BK/WT
4
1 C111
Z133
16
BK/LG
Z133
16
BK/LG
1 C104
Z166
18
BK/WT
5 C100
Z111
20
BK/WT
5
DATA LINK CONNECTOR
(8W-18-2)
1
NATURAL VACUUM LEAK DETECTION ASSEMBLY (EXCEPT EXPORT)
(8W-30-10)
9 C1
18 C1
POWERTRAIN CONTROL MODULE
(8W-30-2)
13 C4
14 C4
POWERTRAIN CONTROL MODULE (EATX)
(8W-31-2)
(8W-31-6)
1
OXYGEN SENSOR 1/2 DOWNSTREAM
(8W-30-6)
1
OXYGEN SENSOR 1/1 UPSTREAM
(8W-30-6)

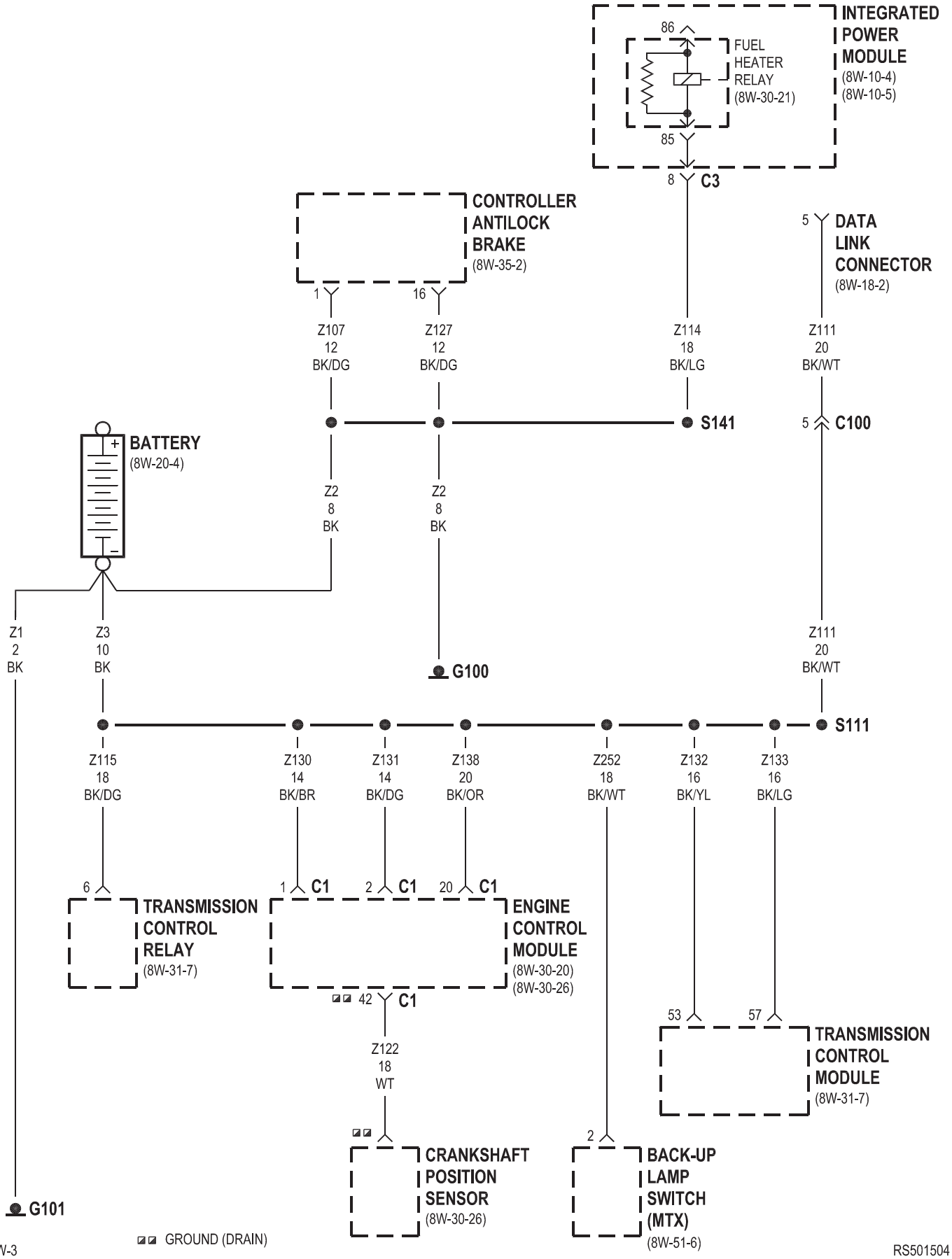
INTEGRATED POWER MODULE
(8W-10-4)
(8W-10-5)
86
FUEL HEATER RELAY
(8W-30-21)
85
8 C3
CONTROLLER ANTILOCK BRAKE
(8W-35-2)
1
16
5 DATA LINK CONNECTOR
(8W-18-2)
Z107 12 BK/DG
Z127 12 BK/DG
Z114 18 BK/LG
Z111 20 BK/WT
S141
5 C100
BATTERY
(8W-20-4)
Z2 8 BK
Z2 8 BK
Z1 2 BK
Z3 10 BK
G100
Z111 20 BK/WT
S111
Z115 18 BK/DG
Z130 14 BK/BR
Z131 14 BK/DG
Z138 20 BK/OR
Z252 18 BK/WT
Z132 16 BK/YL
Z133 16 BK/LG
6
1 C1
2 C1
20 C1
TRANSMISSION CONTROL RELAY
(8W-31-7)
ENGINE CONTROL MODULE
(8W-30-20)
(8W-30-26)
42 C1
53
57
TRANSMISSION CONTROL MODULE
(8W-31-7)
Z122 18 WT
2
CRANKSHAFT POSITION SENSOR
(8W-30-26)
BACK-UP LAMP SWITCH (MTX)
(8W-51-6)
G101
GROUND (DRAIN)

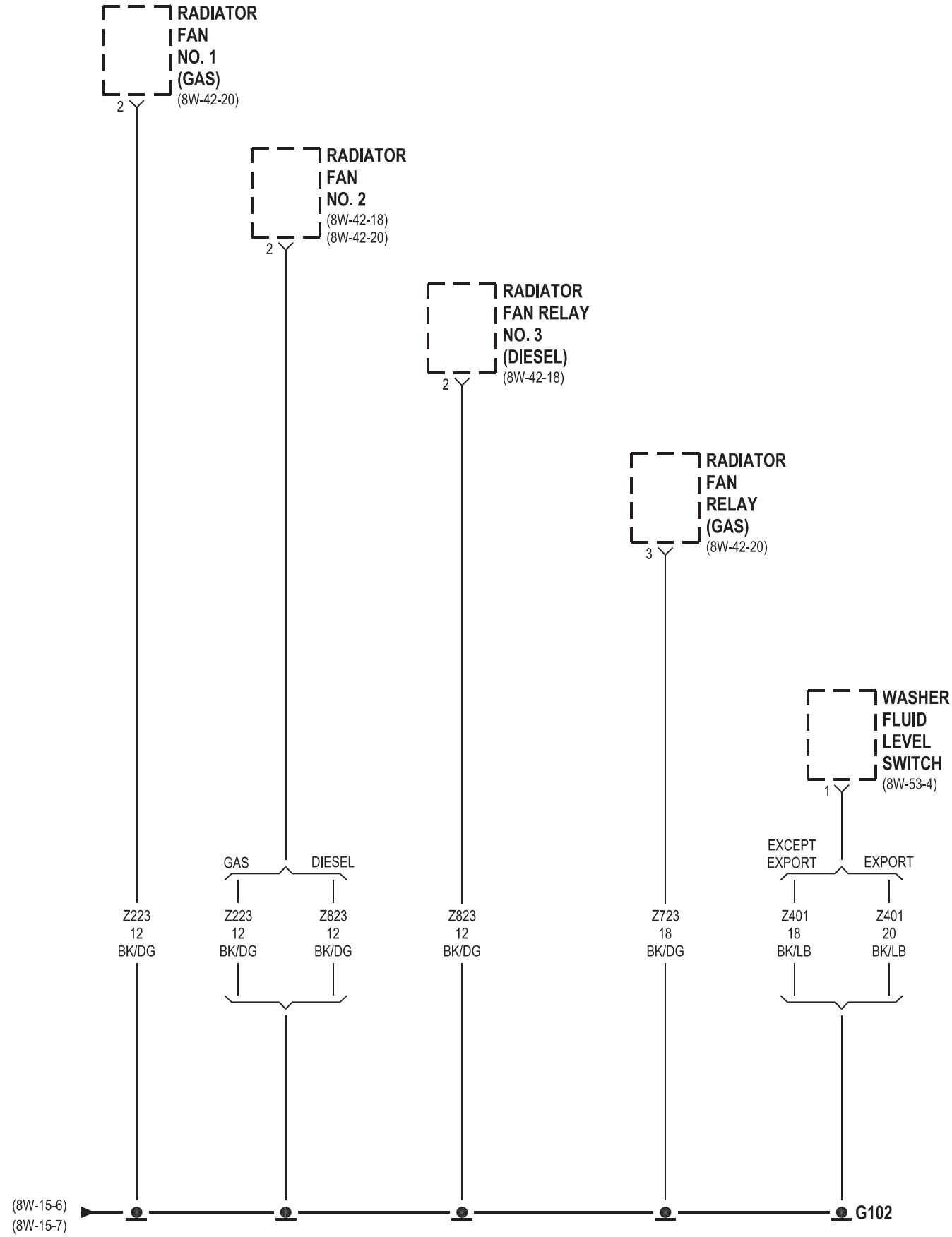
RADIATOR FAN NO. 1 (GAS)
(8W-42-20)
2
RADIATOR FAN NO. 2
(8W-42-18)
(8W-42-20)
2
RADIATOR FAN RELAY NO. 3 (DIESEL)
(8W-42-18)
2
RADIATOR FAN RELAY (GAS)
(8W-42-20)
3
WASHER FLUID LEVEL SWITCH
(8W-53-4)
1
GAS
DIESEL
EXCEPT EXPORT
EXPORT
Z223 12 BK/DG
Z223 12 BK/DG
Z823 12 BK/DG
Z823 12 BK/DG
Z723 18 BK/DG
Z401 18 BK/LB
Z401 20 BK/LB
(8W-15-6)
(8W-15-7)
G102

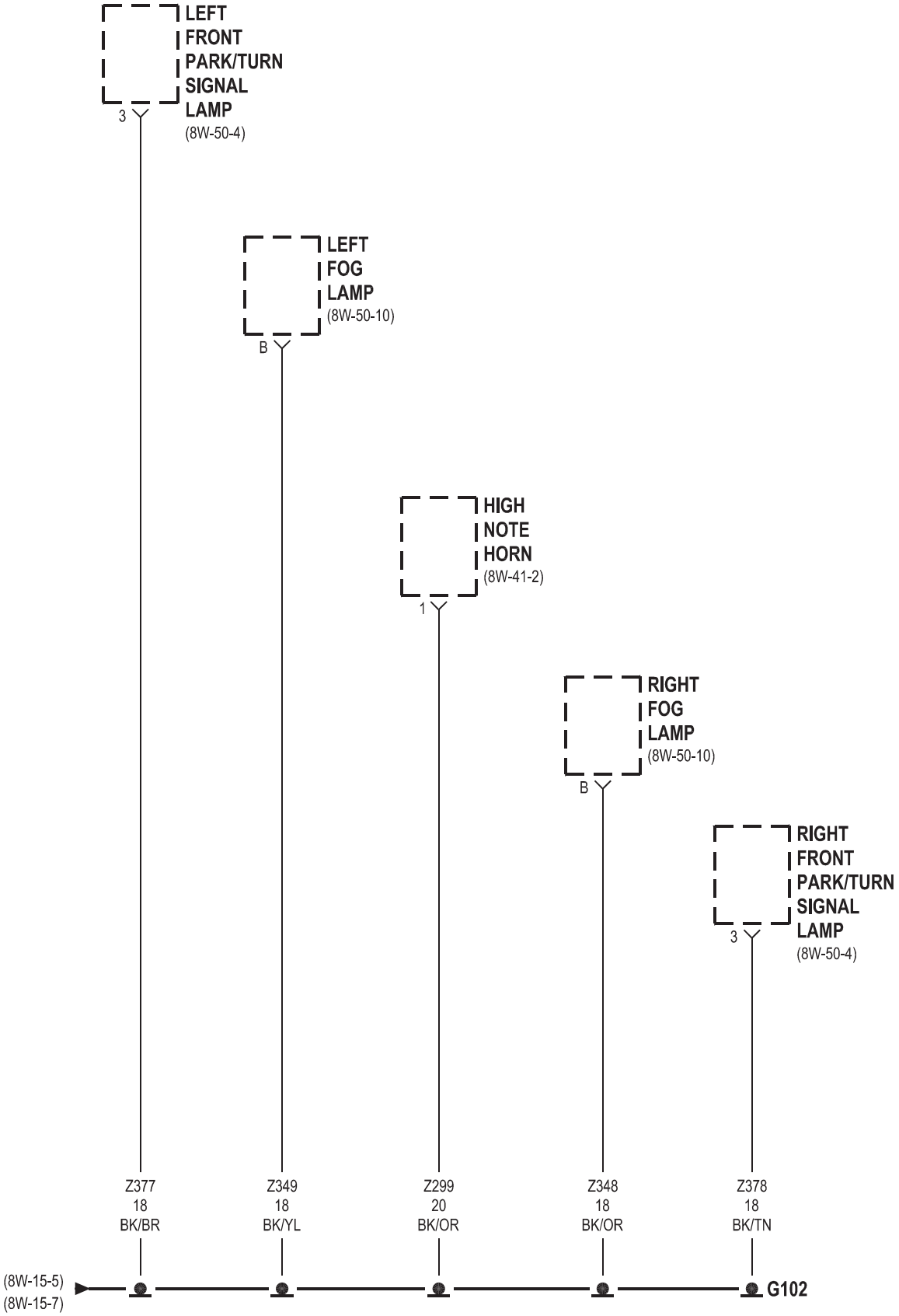
LEFT
FRONT
PARK/TURN
SIGNAL
LAMP
(8W-50-4)
3
LEFT
FOG
LAMP
(8W-50-10)
B
HIGH
NOTE
HORN
(8W-41-2)
1
RIGHT
FOG
LAMP
(8W-50-10)
B
RIGHT
FRONT
PARK/TURN
SIGNAL
LAMP
(8W-50-4)
3
Z377
18
BK/BR
Z349
18
BK/YL
Z299
20
BK/OR
Z348
18
BK/OR
Z378
18
BK/TN
(8W-15-5)
(8W-15-7)
G102

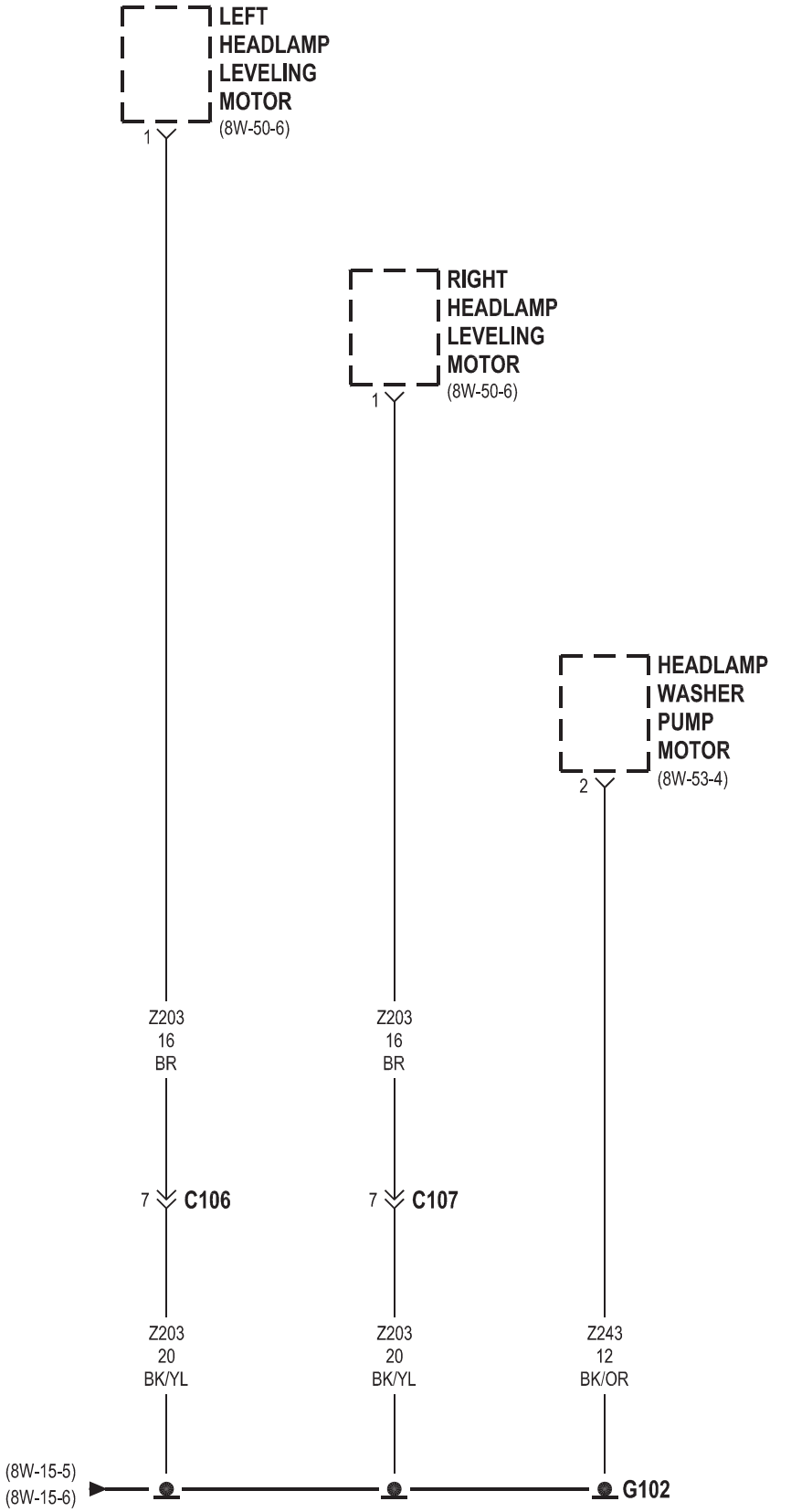
LEFT
HEADLAMP
LEVELING
MOTOR
(8W-50-6)
1
RIGHT
HEADLAMP
LEVELING
MOTOR
(8W-50-6)
1
HEADLAMP
WASHER
PUMP
MOTOR
(8W-53-4)
2
Z203
16
BR
Z203
16
BR
7
C106
7
C107
Z203
20
BK/YL
Z203
20
BK/YL
Z243
12
BK/OR
(8W-15-5)
(8W-15-6)
G102

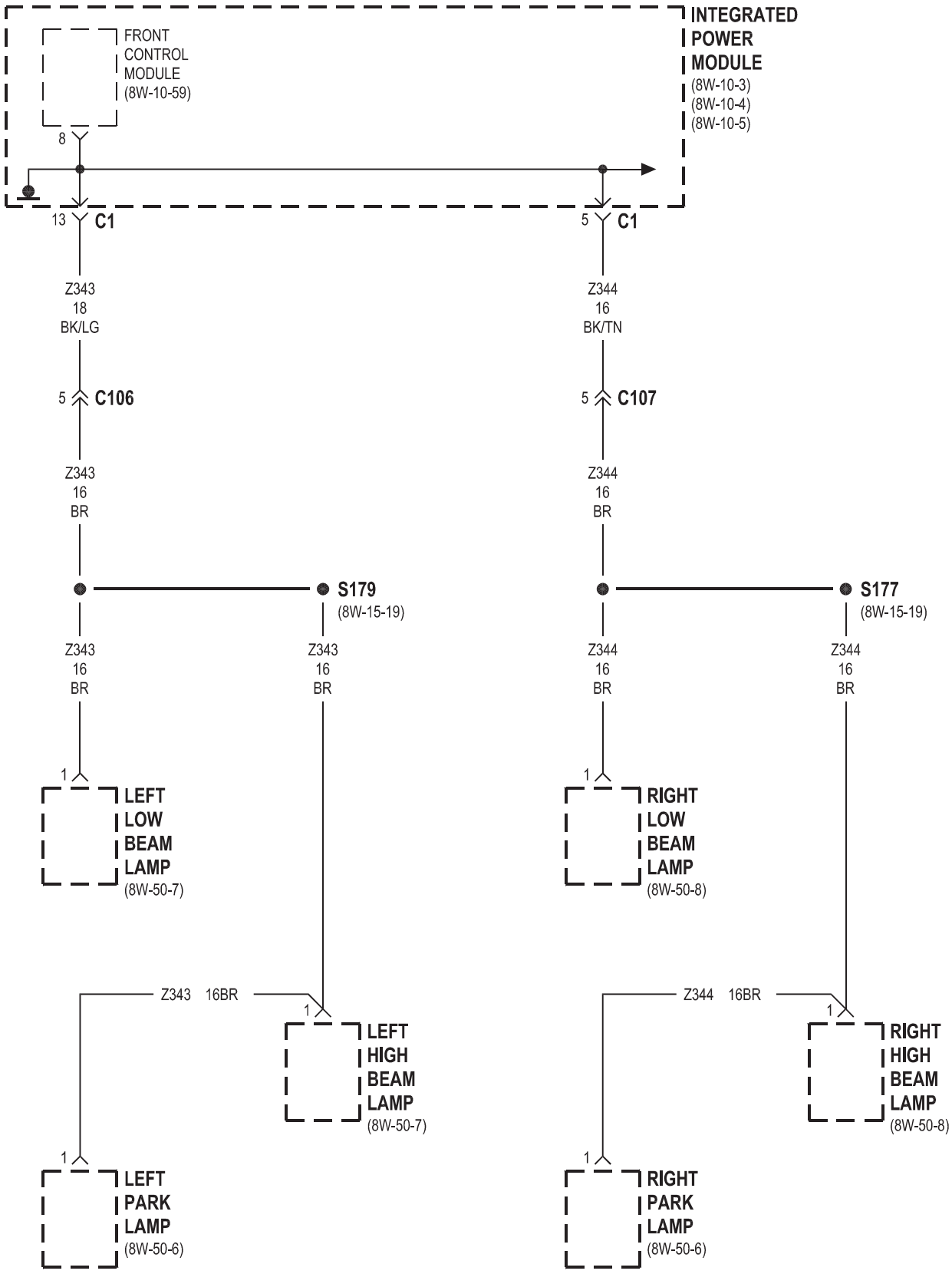
INTEGRATED POWER MODULE
(8W-10-3)
(8W-10-4)
(8W-10-5)
FRONT CONTROL MODULE
(8W-10-59)
8
13 C1
5 C1
Z343 18 BK/LG
Z344 16 BK/TN
5 C106
5 C107
Z343 16 BR
Z344 16 BR
S179
(8W-15-19)
S177
(8W-15-19)
Z343 16 BR
Z343 16 BR
Z344 16 BR
Z344 16 BR
1
LEFT LOW BEAM LAMP
(8W-50-7)
RIGHT LOW BEAM LAMP
(8W-50-8)
Z343 16BR
Z344 16BR
LEFT HIGH BEAM LAMP
(8W-50-7)
RIGHT HIGH BEAM LAMP
(8W-50-8)
LEFT PARK LAMP
(8W-50-6)
RIGHT PARK LAMP
(8W-50-6)

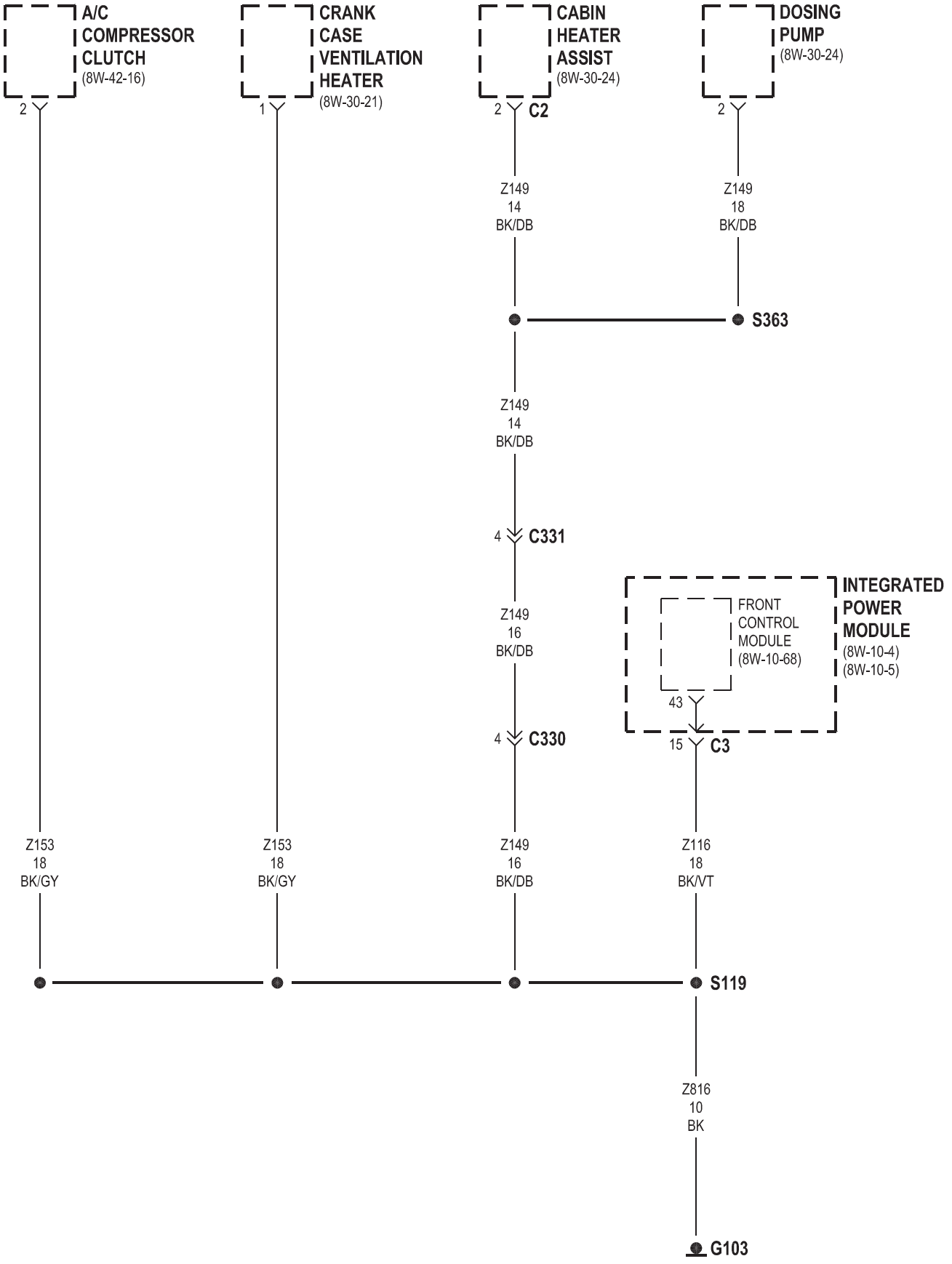
A/C COMPRESSOR CLUTCH
(8W-42-16)
2
CRANK CASE VENTILATION HEATER
(8W-30-21)
1
CABIN HEATER ASSIST
(8W-30-24)
2
C2
DOSING PUMP
(8W-30-24)
2
Z149
14
BK/DB
Z149
18
BK/DB
S363
Z149
14
BK/DB
4
C331
Z149
16
BK/DB
4
C330
INTEGRATED POWER MODULE
(8W-10-4)
(8W-10-5)
FRONT CONTROL MODULE
(8W-10-68)
43
15
C3
Z153
18
BK/GY
Z153
18
BK/GY
Z149
16
BK/DB
Z116
18
BK/VT
S119
Z816
10
BK
G103

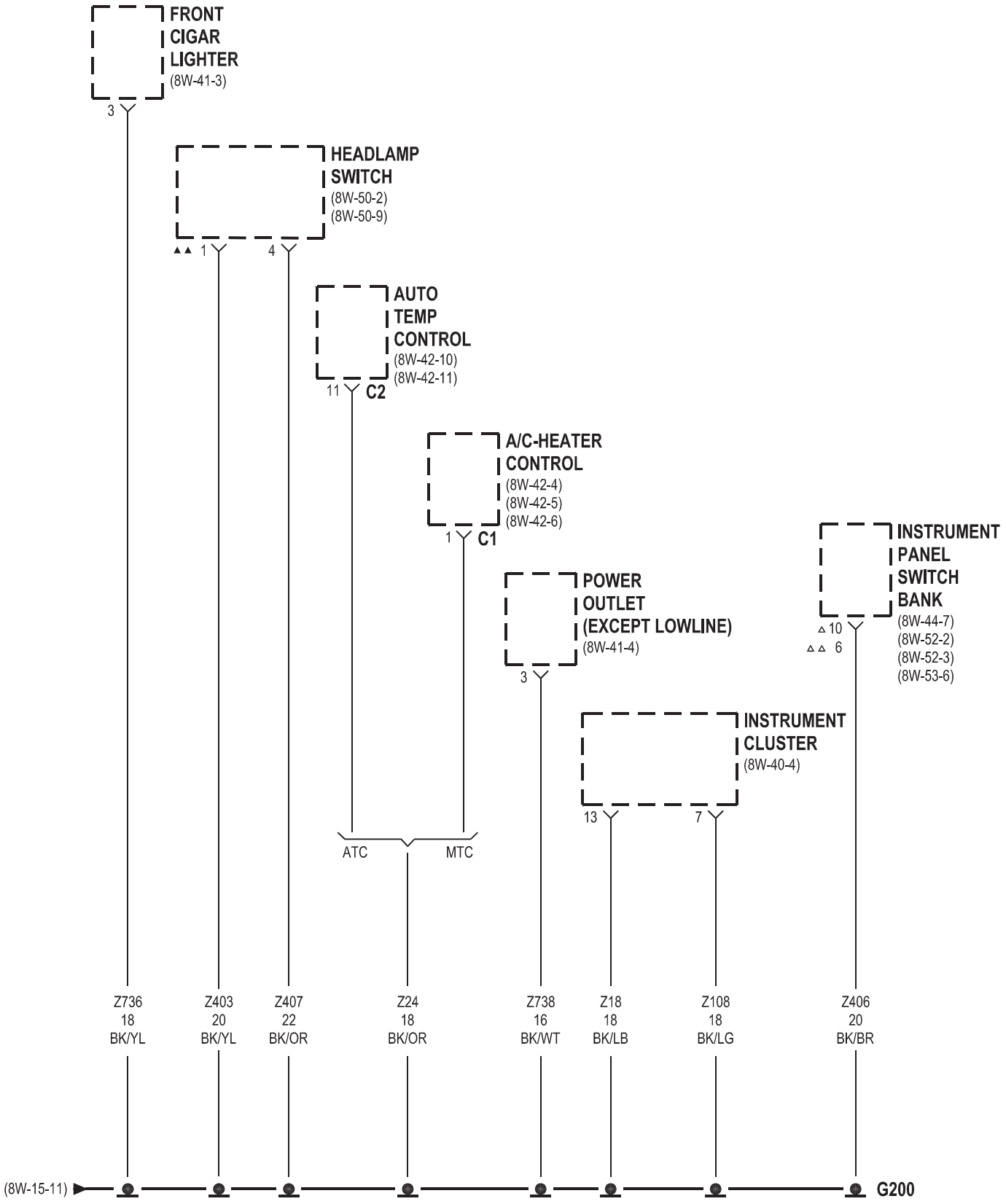
FRONT CIGAR LIGHTER
(8W-41-3)
3
HEADLAMP SWITCH
(8W-50-2)
(8W-50-9)
▲▲ 1
4
AUTO TEMP CONTROL
(8W-42-10)
(8W-42-11)
11
C2
A/C-HEATER CONTROL
(8W-42-4)
(8W-42-5)
(8W-42-6)
1
C1
POWER OUTLET (EXCEPT LOWLINE)
(8W-41-4)
3
INSTRUMENT PANEL SWITCH BANK
(8W-44-7)
(8W-52-2)
(8W-52-3)
(8W-53-6)
△ 10
△△ 6
INSTRUMENT CLUSTER
(8W-40-4)
13
7
ATC
MTC
Z736 18 BK/YL
Z403 20 BK/YL
Z407 22 BK/OR
Z24 18 BK/OR
Z738 16 BK/WT
Z18 18 BK/LB
Z108 18 BK/LG
Z406 20 BK/BR
(8W-15-11)
G200
△ HEATED SEATS
△△ EXCEPT HEATED SEATS
▲▲ EXPORT

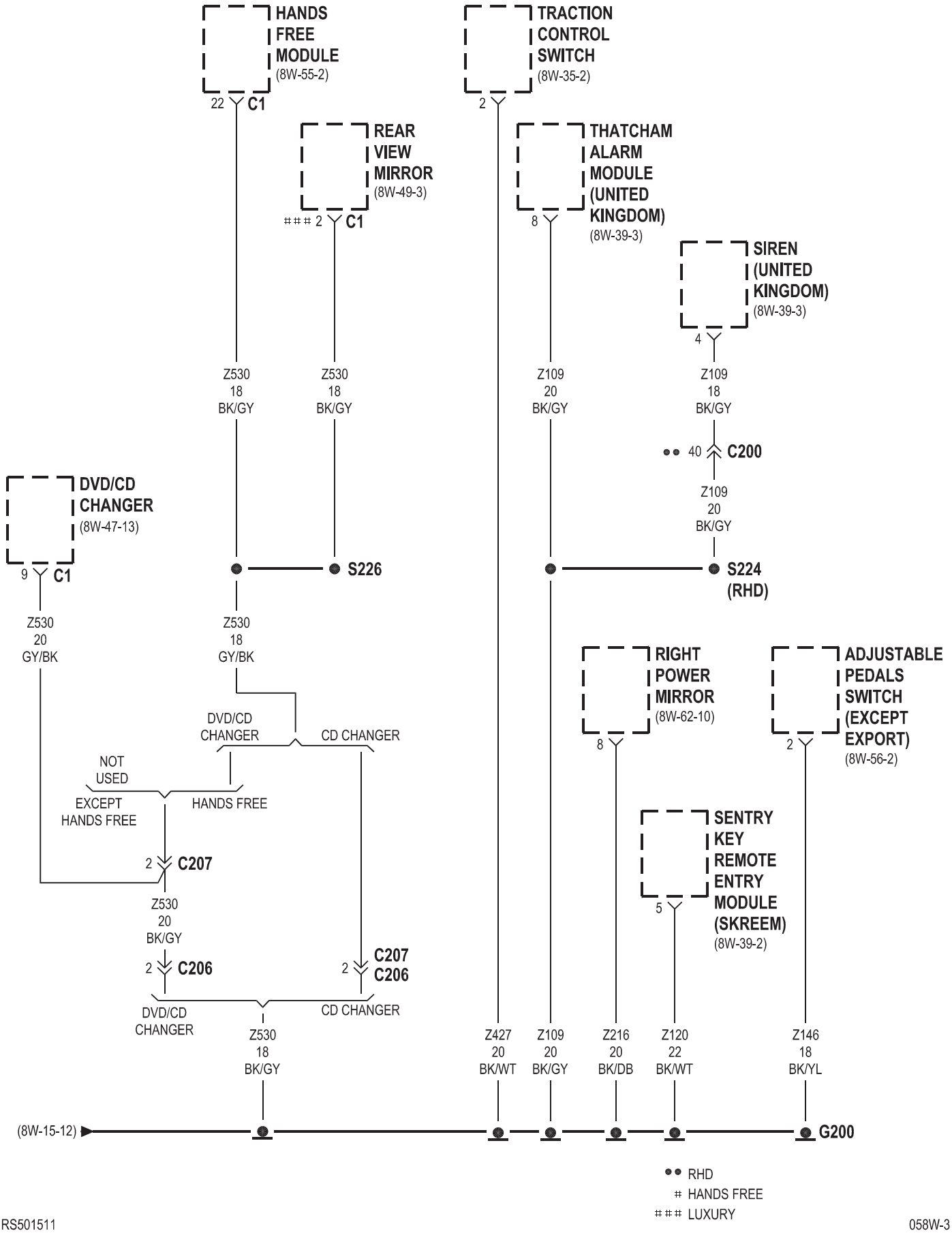
HANDS FREE MODULE
(8W-55-2)
22 C1
REAR VIEW MIRROR
(8W-49-3)
2 C1
TRACTION CONTROL SWITCH
(8W-35-2)
2
THATCHAM ALARM MODULE (UNITED KINGDOM)
(8W-39-3)
8
SIREN (UNITED KINGDOM)
(8W-39-3)
4
Z530 18 BK/GY
Z530 18 BK/GY
Z109 20 BK/GY
Z109 18 BK/GY
•• 40 C200
Z109 20 BK/GY
DVD/CD CHANGER
(8W-47-13)
9 C1
S226
S224 (RHD)
Z530 20 GY/BK
Z530 18 GY/BK
RIGHT POWER MIRROR
(8W-62-10)
8
ADJUSTABLE PEDALS SWITCH (EXCEPT EXPORT)
(8W-56-2)
2
DVD/CD CHANGER
CD CHANGER
NOT USED
EXCEPT HANDS FREE
HANDS FREE
SENTRY KEY REMOTE ENTRY MODULE (SKREEM)
(8W-39-2)
5
2 C207
Z530 20 BK/GY
2 C206
2 C207 C206
DVD/CD CHANGER
CD CHANGER
Z530 18 BK/GY
Z427 20 BK/WT
Z109 20 BK/GY
Z216 20 BK/DB
Z120 22 BK/WT
Z146 18 BK/YL
(8W-15-12)
G200
•• RHD
HANDS FREE
LUXURY

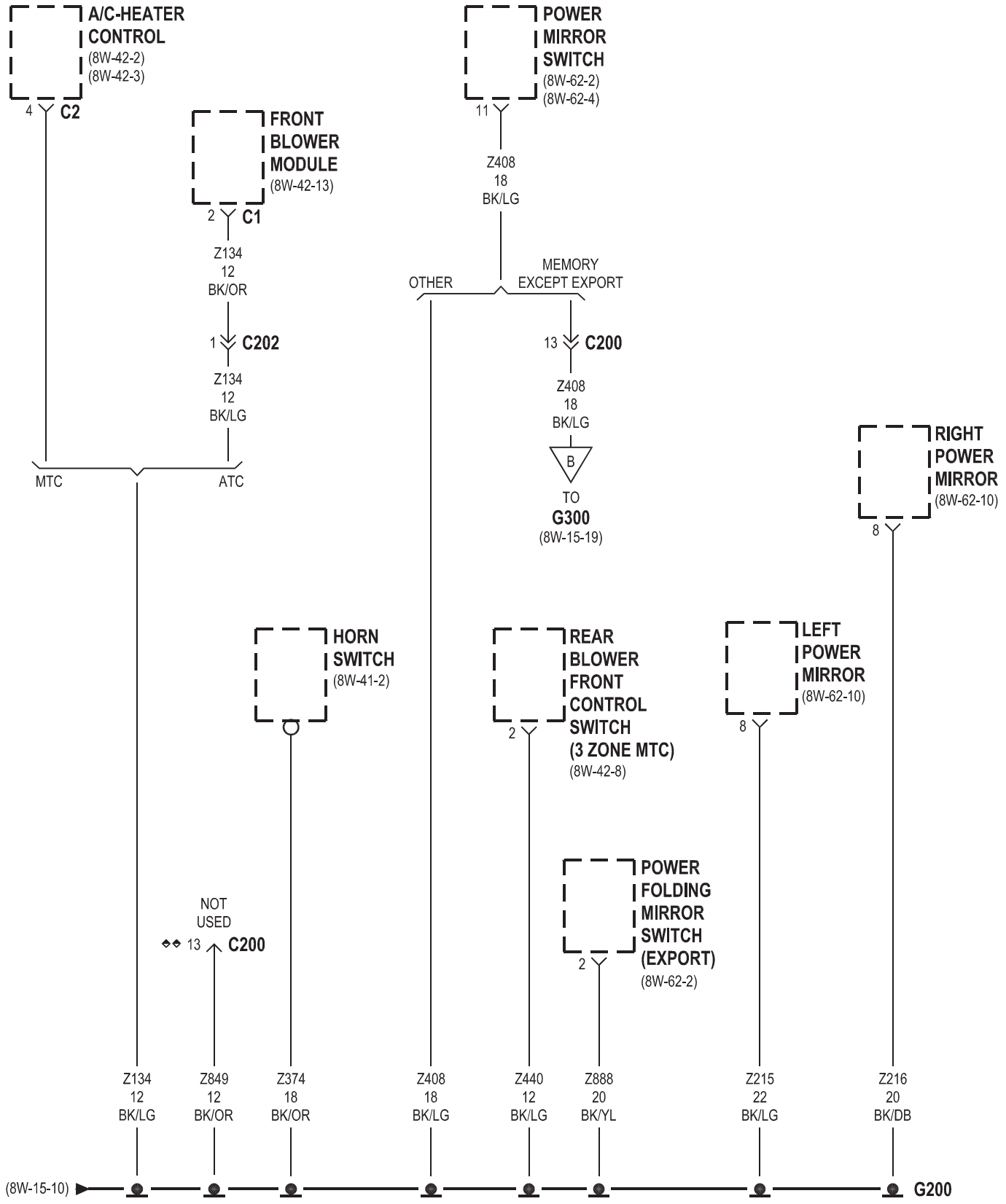
A/C-HEATER CONTROL
(8W-42-2)
(8W-42-3)
4 C2
FRONT BLOWER MODULE
(8W-42-13)
2 C1
Z134
12
BK/OR
1 C202
Z134
12
BK/LG
MTC
ATC
POWER MIRROR SWITCH
(8W-62-2)
(8W-62-4)
11
Z408
18
BK/LG
OTHER
MEMORY EXCEPT EXPORT
13 C200
Z408
18
BK/LG
B
TO
G300
(8W-15-19)
RIGHT POWER MIRROR
(8W-62-10)
8
HORN SWITCH
(8W-41-2)
REAR BLOWER FRONT CONTROL SWITCH (3 ZONE MTC)
(8W-42-8)
2
LEFT POWER MIRROR
(8W-62-10)
8
POWER FOLDING MIRROR SWITCH (EXPORT)
(8W-62-2)
2
NOT USED
◆◆ 13 C200
Z134
12
BK/LG
Z849
12
BK/OR
Z374
18
BK/OR
Z408
18
BK/LG
Z440
12
BK/LG
Z888
20
BK/YL
Z215
22
BK/LG
Z216
20
BK/DB
(8W-15-10)
G200

◆◆ LHD EXPORT

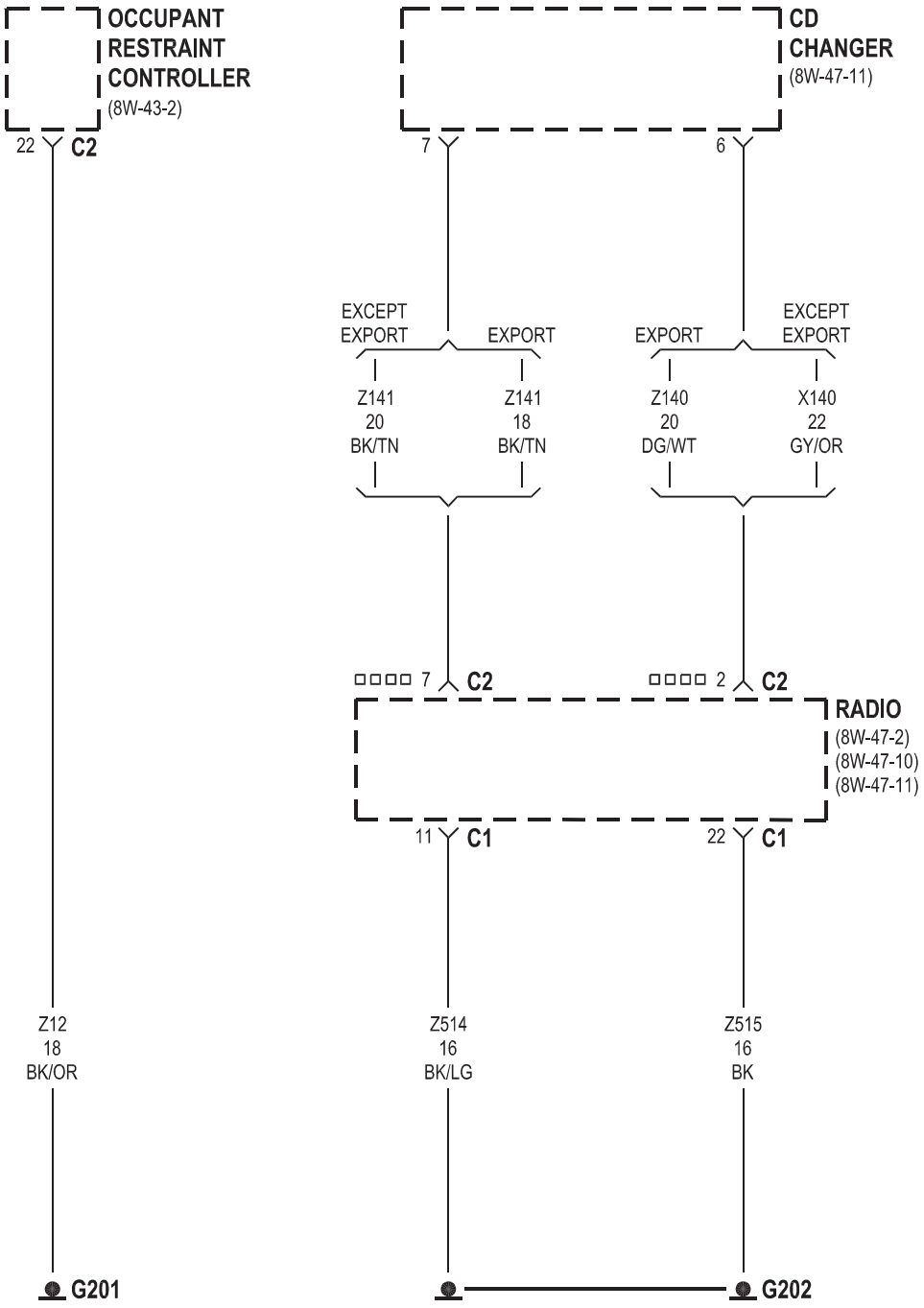
OCCUPANT
RESTRAINT
CONTROLLER
(8W-43-2)
22 C2
CD
CHANGER
(8W-47-11)
7
6
EXCEPT
EXPORT
EXPORT
EXPORT
EXCEPT
EXPORT
Z141
20
BK/TN
Z141
18
BK/TN
Z140
20
DG/WT
X140
22
GY/OR
7 C2
2 C2
RADIO
(8W-47-2)
(8W-47-10)
(8W-47-11)
11 C1
22 C1
Z12
18
BK/OR
Z514
16
BK/LG
Z515
16
BK
G201
G202

□□□□ CD CHANGER

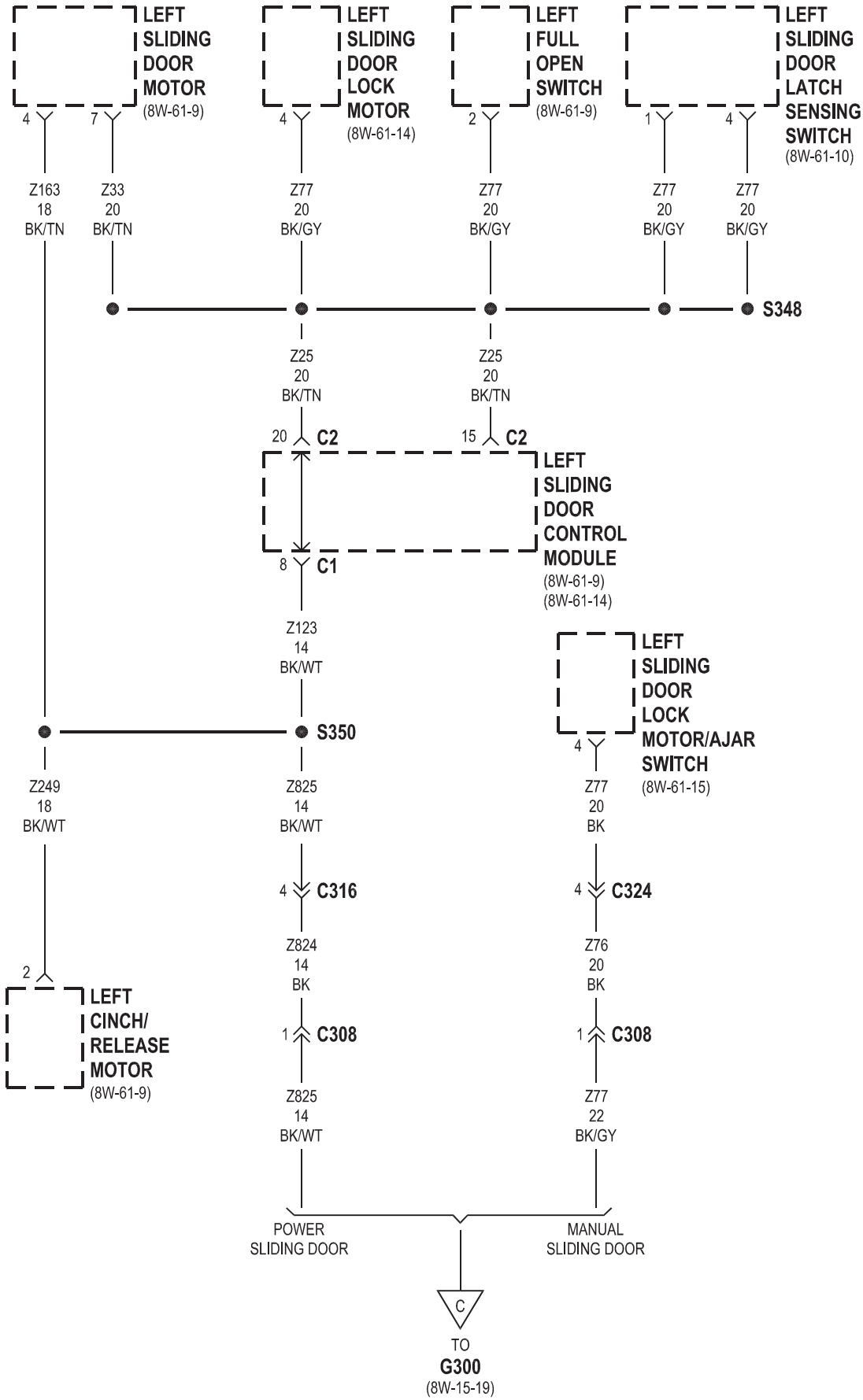
LEFT SLIDING DOOR MOTOR (8W-61-9)
LEFT SLIDING DOOR LOCK MOTOR (8W-61-14)
LEFT FULL OPEN SWITCH (8W-61-9)
LEFT SLIDING DOOR LATCH SENSING SWITCH (8W-61-10)
4
7
4
2
1
4
Z163 18 BK/TN
Z33 20 BK/TN
Z77 20 BK/GY
Z77 20 BK/GY
Z77 20 BK/GY
Z77 20 BK/GY
S348
Z25 20 BK/TN
Z25 20 BK/TN
20 C2
15 C2
LEFT SLIDING DOOR CONTROL MODULE (8W-61-9) (8W-61-14)
8 C1
Z123 14 BK/WT
LEFT SLIDING DOOR LOCK MOTOR/AJAR SWITCH (8W-61-15)
4
S350
Z249 18 BK/WT
Z825 14 BK/WT
Z77 20 BK
4 C316
4 C324
Z824 14 BK
Z76 20 BK
2
1 C308
1 C308
LEFT CINCH/ RELEASE MOTOR (8W-61-9)
Z825 14 BK/WT
Z77 22 BK/GY
POWER SLIDING DOOR
MANUAL SLIDING DOOR
C
TO
G300
(8W-15-19)

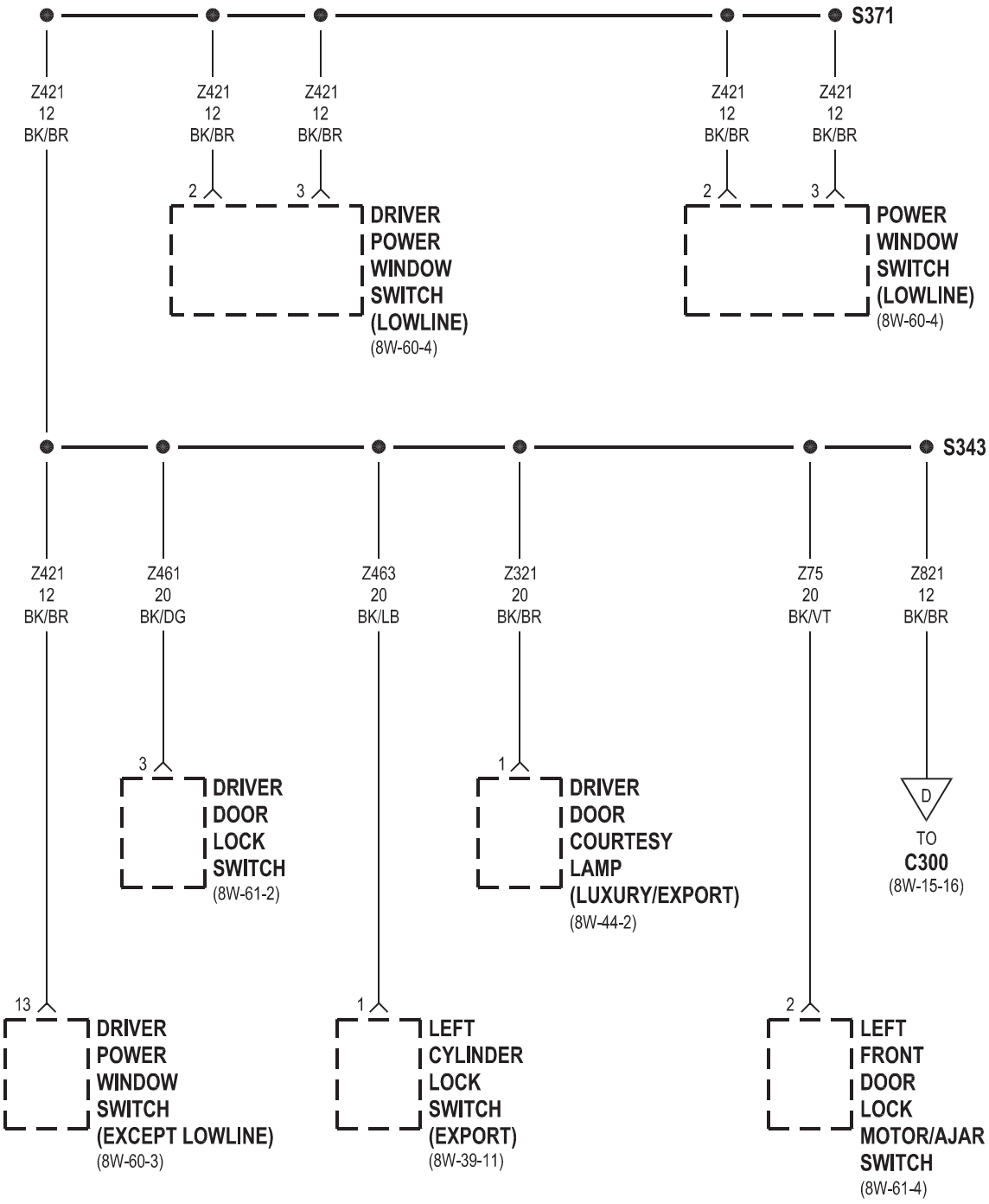
S371
Z421
12
BK/BR
Z421
12
BK/BR
Z421
12
BK/BR
Z421
12
BK/BR
Z421
12
BK/BR
2
3
DRIVER
POWER
WINDOW
SWITCH
(LOWLINE)
(8W-60-4)
2
3
POWER
WINDOW
SWITCH
(LOWLINE)
(8W-60-4)
S343
Z421
12
BK/BR
Z461
20
BK/DG
Z463
20
BK/LB
Z321
20
BK/BR
Z75
20
BK/VT
Z821
12
BK/BR
3
DRIVER
DOOR
LOCK
SWITCH
(8W-61-2)
1
DRIVER
DOOR
COURTESY
LAMP
(LUXURY/EXPORT)
(8W-44-2)
D
TO
C300
(8W-15-16)
13
DRIVER
POWER
WINDOW
SWITCH
(EXCEPT LOWLINE)
(8W-60-3)
1
LEFT
CYLINDER
LOCK
SWITCH
(EXPORT)
(8W-39-11)
2
LEFT
FRONT
DOOR
LOCK
MOTOR/AJAR
SWITCH
(8W-61-4)

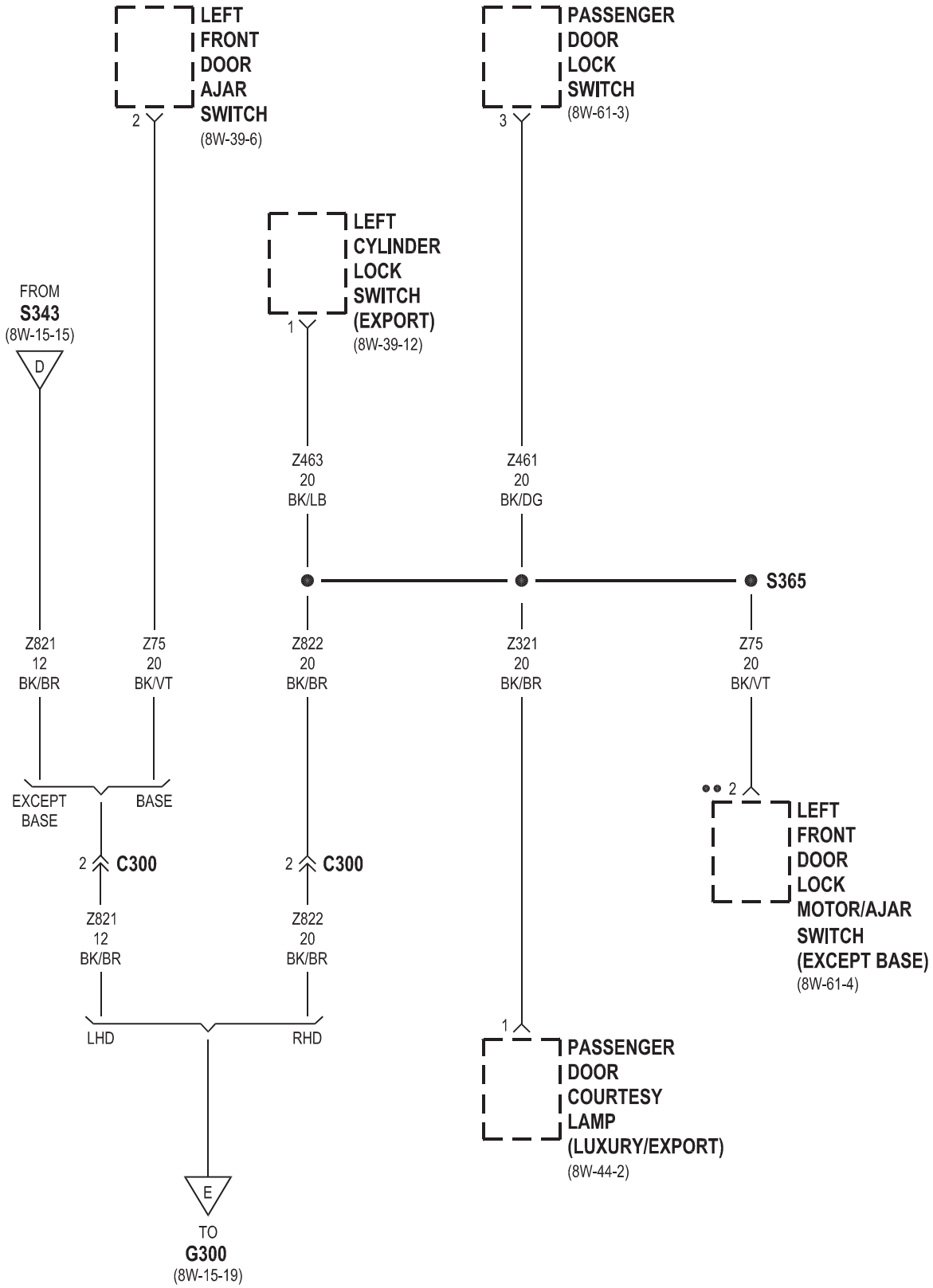
LEFT FRONT DOOR AJAR SWITCH
(8W-39-6)
2
PASSENGER DOOR LOCK SWITCH
(8W-61-3)
3
LEFT CYLINDER LOCK SWITCH (EXPORT)
(8W-39-12)
1
FROM S343
(8W-15-15)
D
Z463 20 BK/LB
Z461 20 BK/DG
S365
Z821 12 BK/BR
Z75 20 BK/VT
Z822 20 BK/BR
Z321 20 BK/BR
Z75 20 BK/VT
EXCEPT BASE
BASE
2 C300
2 C300
Z821 12 BK/BR
Z822 20 BK/BR
LHD
RHD
•• 2
LEFT FRONT DOOR LOCK MOTOR/AJAR SWITCH (EXCEPT BASE)
(8W-61-4)
1
PASSENGER DOOR COURTESY LAMP (LUXURY/EXPORT)
(8W-44-2)
E
TO G300
(8W-15-19)

•• RHD

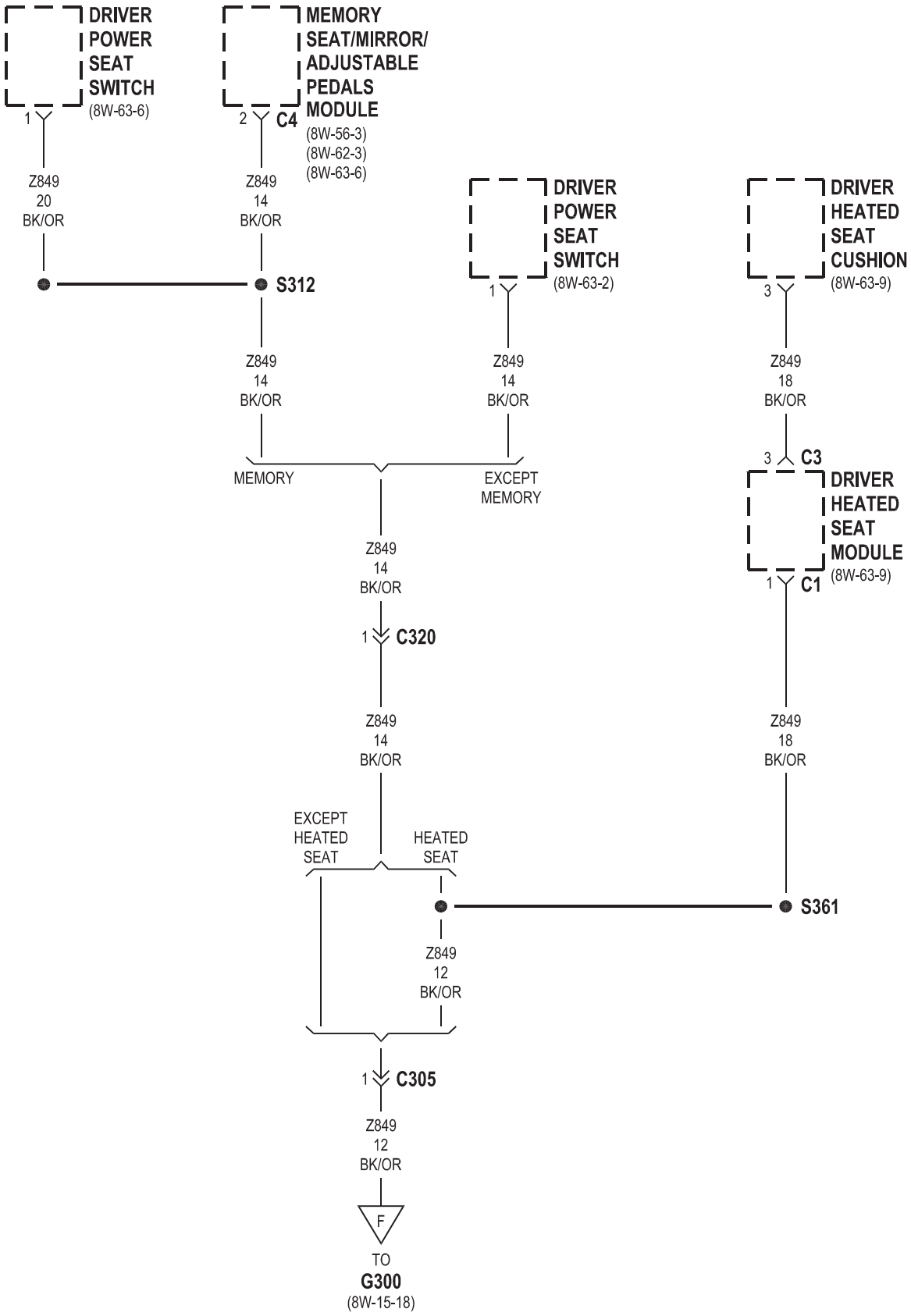
DRIVER POWER SEAT SWITCH
(8W-63-6)
1
Z849
20
BK/OR
MEMORY SEAT/MIRROR/ ADJUSTABLE PEDALS MODULE
(8W-56-3)
(8W-62-3)
(8W-63-6)
2
C4
Z849
14
BK/OR
S312
DRIVER POWER SEAT SWITCH
(8W-63-2)
1
Z849
14
BK/OR
DRIVER HEATED SEAT CUSHION
(8W-63-9)
3
Z849
18
BK/OR
3
C3
DRIVER HEATED SEAT MODULE
(8W-63-9)
1
C1
MEMORY
EXCEPT MEMORY
Z849
14
BK/OR
1
C320
Z849
14
BK/OR
EXCEPT HEATED SEAT
HEATED SEAT
S361
Z849
18
BK/OR
Z849
12
BK/OR
1
C305
Z849
12
BK/OR
F
TO
G300
(8W-15-18)

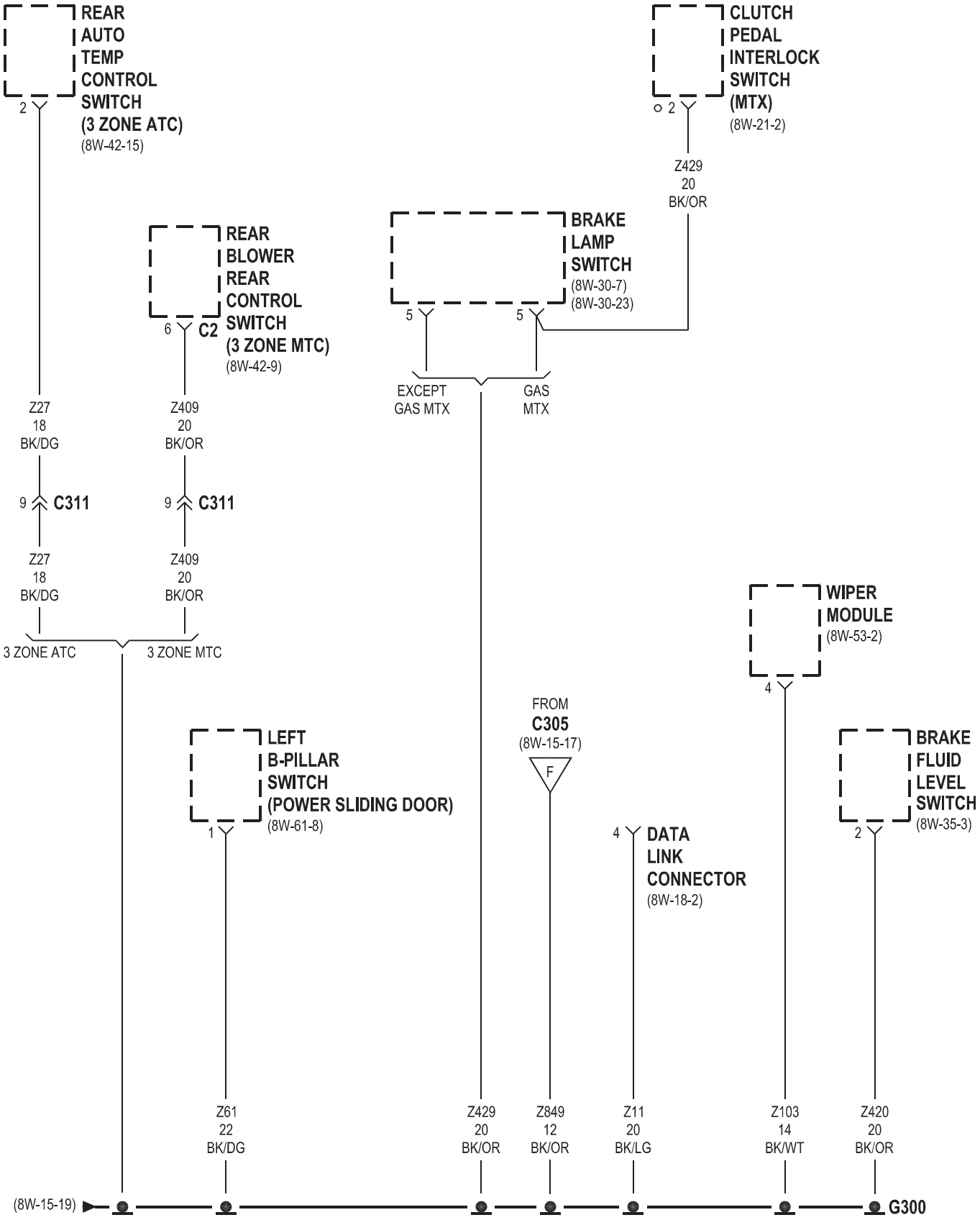
REAR AUTO TEMP CONTROL SWITCH (3 ZONE ATC)
(8W-42-15)
2
REAR BLOWER REAR CONTROL SWITCH (3 ZONE MTC)
(8W-42-9)
6
C2
CLUTCH PEDAL INTERLOCK SWITCH (MTX)
(8W-21-2)
2
Z429
20
BK/OR
BRAKE LAMP SWITCH
(8W-30-7)
(8W-30-23)
5
5
EXCEPT GAS MTX
GAS MTX
Z27
18
BK/DG
Z409
20
BK/OR
9
C311
9
C311
Z27
18
BK/DG
Z409
20
BK/OR
3 ZONE ATC
3 ZONE MTC
WIPER MODULE
(8W-53-2)
4
FROM
C305
(8W-15-17)
F
LEFT B-PILLAR SWITCH (POWER SLIDING DOOR)
(8W-61-8)
1
BRAKE FLUID LEVEL SWITCH
(8W-35-3)
2
4
DATA LINK CONNECTOR
(8W-18-2)
Z61
22
BK/DG
Z429
20
BK/OR
Z849
12
BK/OR
Z11
20
BK/LG
Z103
14
BK/WT
Z420
20
BK/OR
(8W-15-19)
G300
GAS

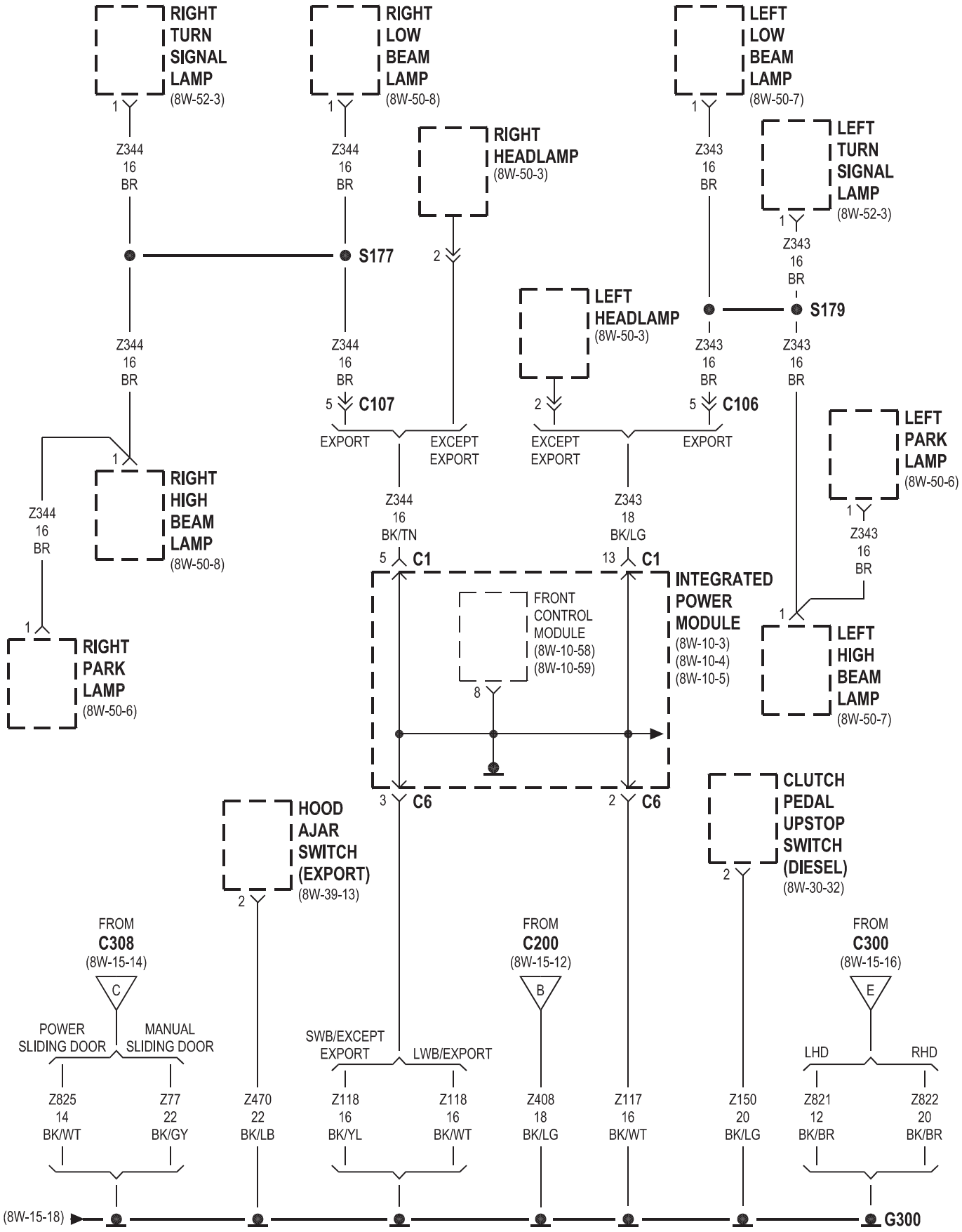
RIGHT TURN SIGNAL LAMP (8W-52-3)
RIGHT LOW BEAM LAMP (8W-50-8)
RIGHT HEADLAMP (8W-50-3)
LEFT LOW BEAM LAMP (8W-50-7)
LEFT TURN SIGNAL LAMP (8W-52-3)
LEFT HEADLAMP (8W-50-3)
RIGHT HIGH BEAM LAMP (8W-50-8)
RIGHT PARK LAMP (8W-50-6)
LEFT PARK LAMP (8W-50-6)
LEFT HIGH BEAM LAMP (8W-50-7)
S177
S179
C107
C106
C1
C6
INTEGRATED POWER MODULE (8W-10-3) (8W-10-4) (8W-10-5)
FRONT CONTROL MODULE (8W-10-58) (8W-10-59)
HOOD AJAR SWITCH (EXPORT) (8W-39-13)
CLUTCH PEDAL UPSTOP SWITCH (DIESEL) (8W-30-32)
EXPORT
EXCEPT EXPORT
Z344 16 BR
Z343 16 BR
Z344 16 BK/TN
Z343 18 BK/LG
FROM C308 (8W-15-14)
FROM C200 (8W-15-12)
FROM C300 (8W-15-16)
POWER SLIDING DOOR
MANUAL SLIDING DOOR
SWB/EXCEPT EXPORT
LWB/EXPORT
LHD
RHD
Z825 14 BK/WT
Z77 22 BK/GY
Z470 22 BK/LB
Z118 16 BK/YL
Z118 16 BK/WT
Z408 18 BK/LG
Z117 16 BK/WT
Z150 20 BK/LG
Z821 12 BK/BR
Z822 20 BK/BR
(8W-15-18)
G300

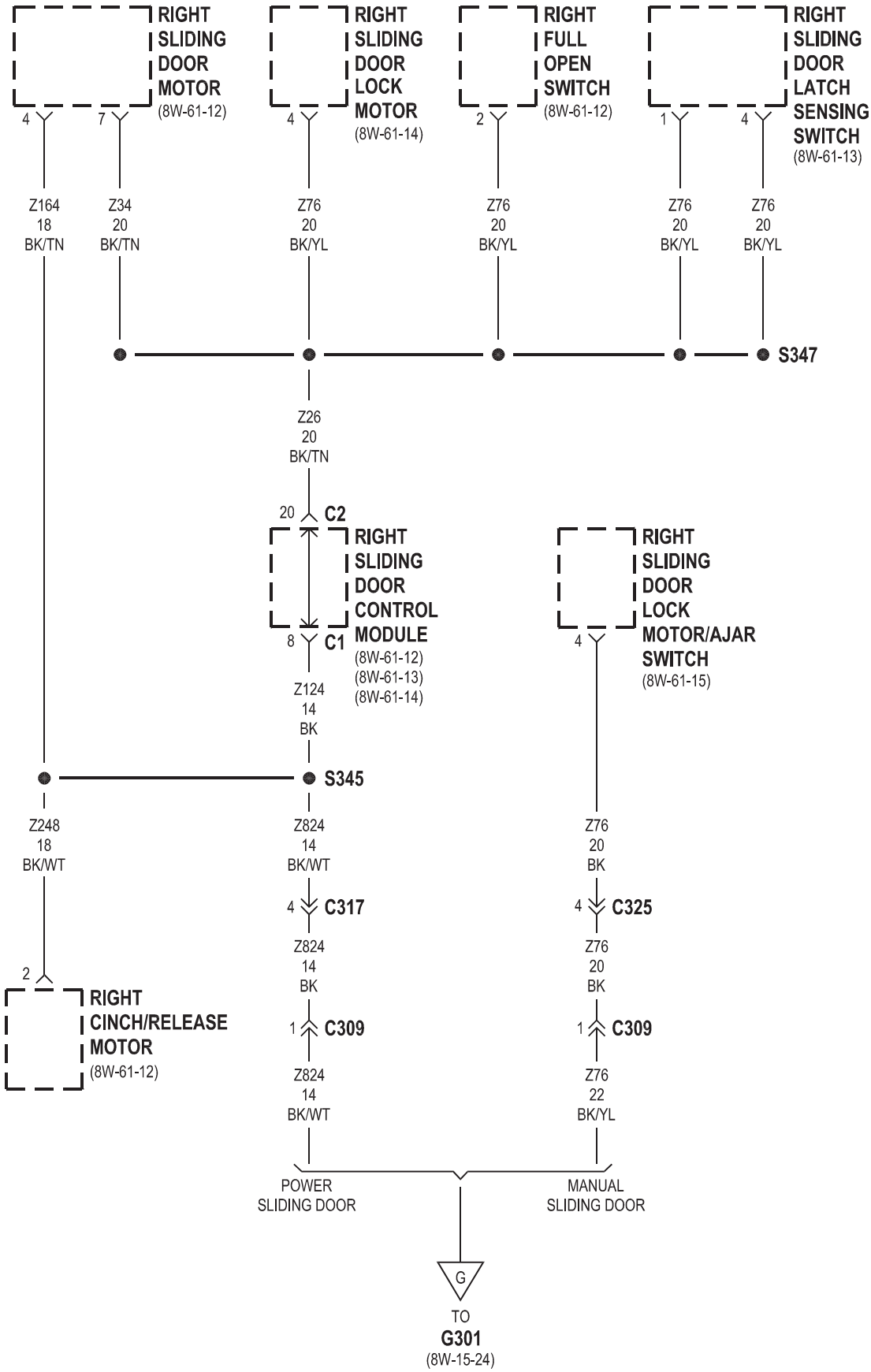
RIGHT SLIDING DOOR MOTOR
(8W-61-12)
4
7
Z164
18
BK/TN
Z34
20
BK/TN
RIGHT SLIDING DOOR LOCK MOTOR
(8W-61-14)
4
Z76
20
BK/YL
RIGHT FULL OPEN SWITCH
(8W-61-12)
2
Z76
20
BK/YL
RIGHT SLIDING DOOR LATCH SENSING SWITCH
(8W-61-13)
1
4
Z76
20
BK/YL
Z76
20
BK/YL
S347
Z26
20
BK/TN
20
C2
RIGHT SLIDING DOOR CONTROL MODULE
(8W-61-12)
(8W-61-13)
(8W-61-14)
8
C1
Z124
14
BK
S345
RIGHT SLIDING DOOR LOCK MOTOR/AJAR SWITCH
(8W-61-15)
4
Z76
20
BK
4
C325
Z76
20
BK
1
C309
Z76
22
BK/YL
Z248
18
BK/WT
2
RIGHT CINCH/RELEASE MOTOR
(8W-61-12)
Z824
14
BK/WT
4
C317
Z824
14
BK
1
C309
Z824
14
BK/WT
POWER SLIDING DOOR
MANUAL SLIDING DOOR
G
TO
G301
(8W-15-24)

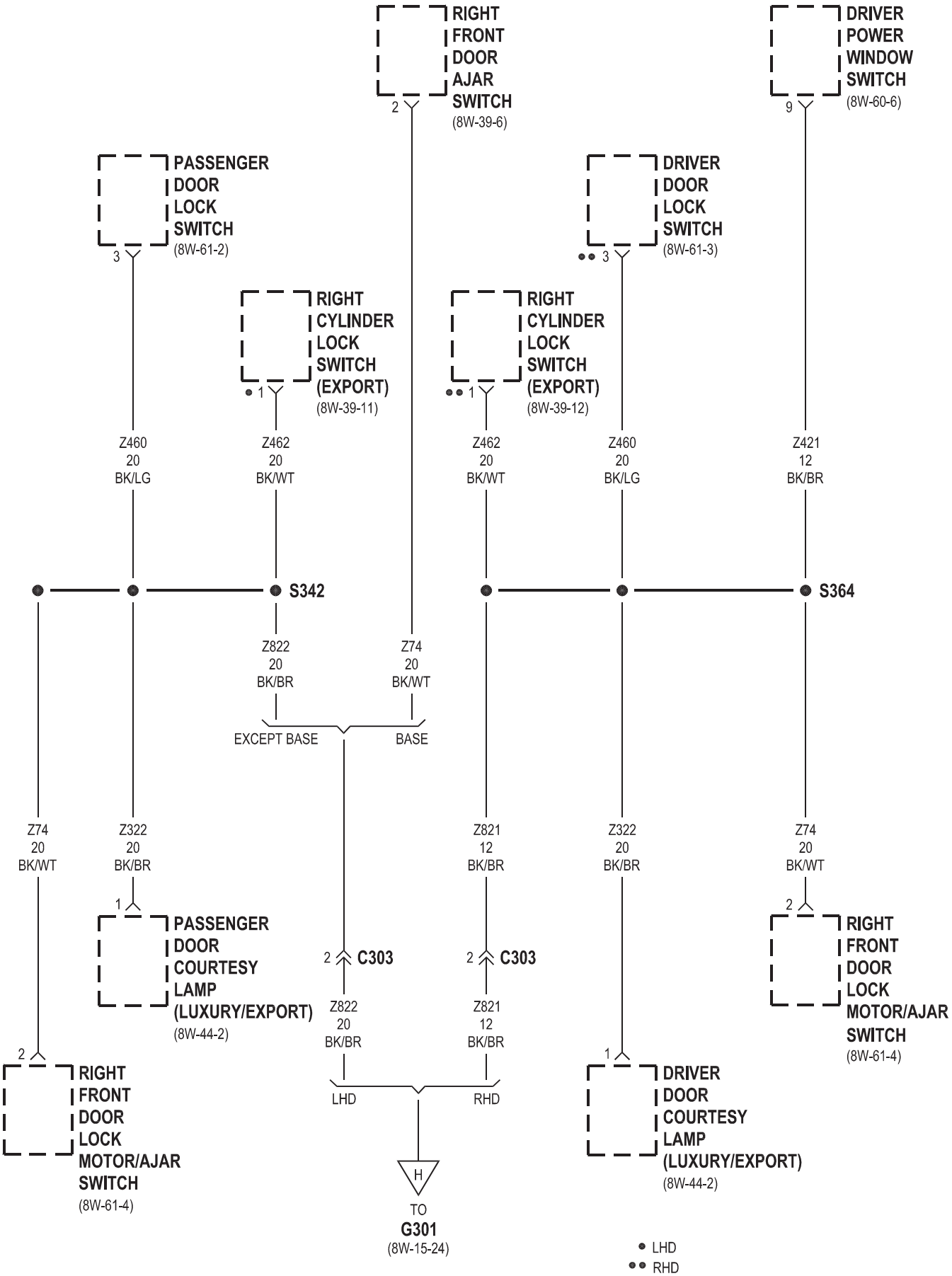
RIGHT FRONT DOOR AJAR SWITCH
(8W-39-6)
DRIVER POWER WINDOW SWITCH
(8W-60-6)
PASSENGER DOOR LOCK SWITCH
(8W-61-2)
DRIVER DOOR LOCK SWITCH
(8W-61-3)
RIGHT CYLINDER LOCK SWITCH (EXPORT)
(8W-39-11)
RIGHT CYLINDER LOCK SWITCH (EXPORT)
(8W-39-12)
Z460 20 BK/LG
Z462 20 BK/WT
Z462 20 BK/WT
Z460 20 BK/LG
Z421 12 BK/BR
S342
S364
Z822 20 BK/BR
Z74 20 BK/WT
EXCEPT BASE
BASE
Z74 20 BK/WT
Z322 20 BK/BR
Z821 12 BK/BR
Z322 20 BK/BR
Z74 20 BK/WT
PASSENGER DOOR COURTESY LAMP (LUXURY/EXPORT)
(8W-44-2)
C303
C303
Z822 20 BK/BR
Z821 12 BK/BR
RIGHT FRONT DOOR LOCK MOTOR/AJAR SWITCH
(8W-61-4)
LHD
RHD
DRIVER DOOR COURTESY LAMP (LUXURY/EXPORT)
(8W-44-2)
RIGHT FRONT DOOR LOCK MOTOR/AJAR SWITCH
(8W-61-4)
H
TO
G301
(8W-15-24)
LHD
RHD

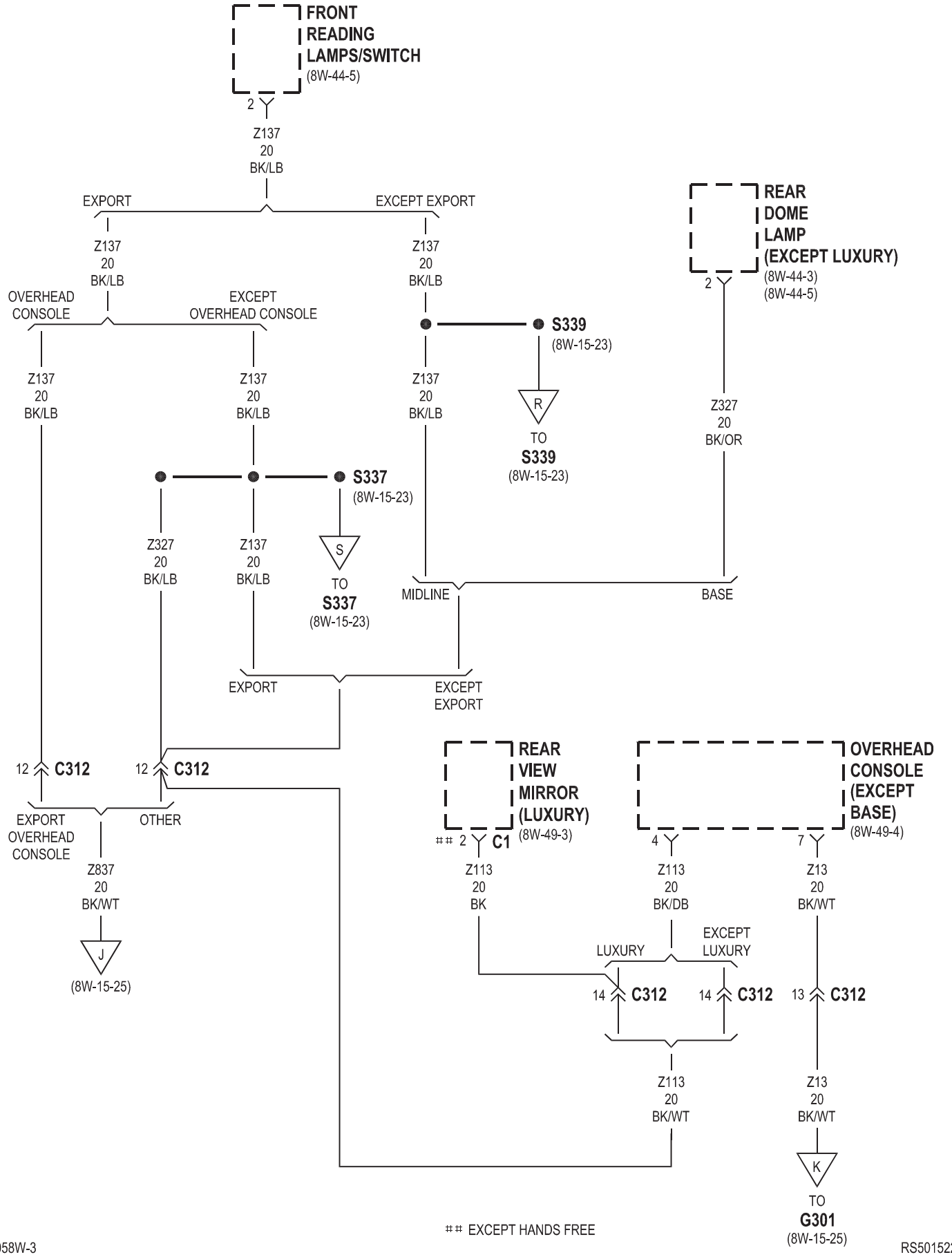
FRONT READING LAMPS/SWITCH
(8W-44-5)
2
Z137 20 BK/LB
EXPORT
EXCEPT EXPORT
Z137 20 BK/LB
Z137 20 BK/LB
OVERHEAD CONSOLE
EXCEPT OVERHEAD CONSOLE
S339
(8W-15-23)
REAR DOME LAMP (EXCEPT LUXURY)
(8W-44-3)
(8W-44-5)
2
Z137 20 BK/LB
Z137 20 BK/LB
Z137 20 BK/LB
R
TO S339
(8W-15-23)
Z327 20 BK/OR
S337
(8W-15-23)
Z327 20 BK/LB
Z137 20 BK/LB
S
TO S337
(8W-15-23)
MIDLINE
BASE
EXPORT
EXCEPT EXPORT
12 C312
12 C312
REAR VIEW MIRROR (LUXURY)
(8W-49-3)
OVERHEAD CONSOLE (EXCEPT BASE)
(8W-49-4)
EXPORT OVERHEAD CONSOLE
OTHER
2 C1
4
7
Z837 20 BK/WT
Z113 20 BK
Z113 20 BK/DB
Z13 20 BK/WT
J
(8W-15-25)
LUXURY
EXCEPT LUXURY
14 C312
14 C312
13 C312
Z113 20 BK/WT
Z13 20 BK/WT
K
TO G301
(8W-15-25)
EXCEPT HANDS FREE

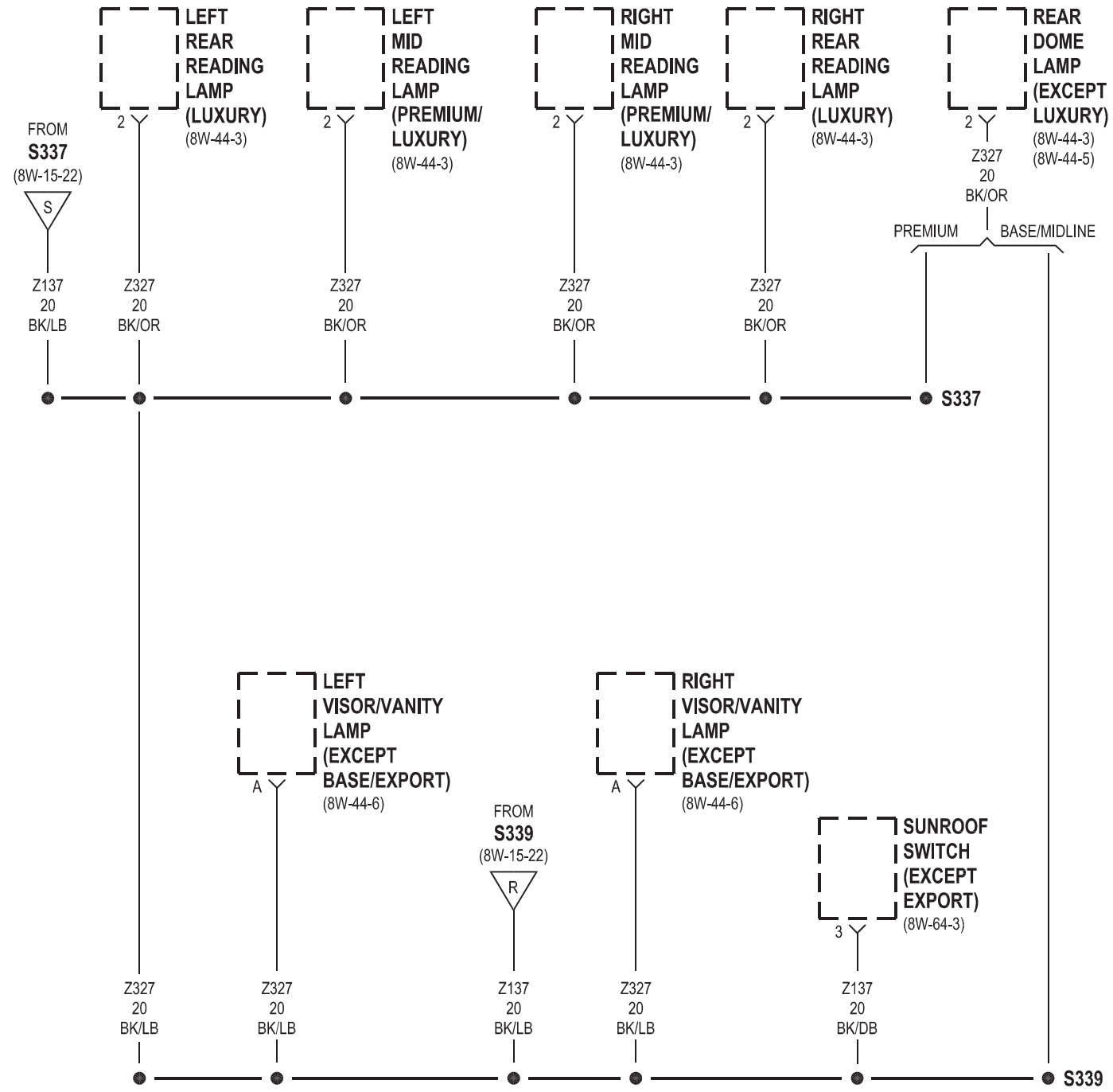
LEFT REAR READING LAMP (LUXURY)
(8W-44-3)
LEFT MID READING LAMP (PREMIUM/ LUXURY)
(8W-44-3)
RIGHT MID READING LAMP (PREMIUM/ LUXURY)
(8W-44-3)
RIGHT REAR READING LAMP (LUXURY)
(8W-44-3)
REAR DOME LAMP (EXCEPT LUXURY)
(8W-44-3)
(8W-44-5)
FROM S337 (8W-15-22)
S
Z137 20 BK/LB
Z327 20 BK/OR
Z327 20 BK/OR
Z327 20 BK/OR
Z327 20 BK/OR
Z327 20 BK/OR
PREMIUM
BASE/MIDLINE
S337
LEFT VISOR/VANITY LAMP (EXCEPT BASE/EXPORT)
(8W-44-6)
RIGHT VISOR/VANITY LAMP (EXCEPT BASE/EXPORT)
(8W-44-6)
SUNROOF SWITCH (EXCEPT EXPORT)
(8W-64-3)
FROM S339 (8W-15-22)
R
Z327 20 BK/LB
Z327 20 BK/LB
Z137 20 BK/LB
Z327 20 BK/LB
Z137 20 BK/DB
S339

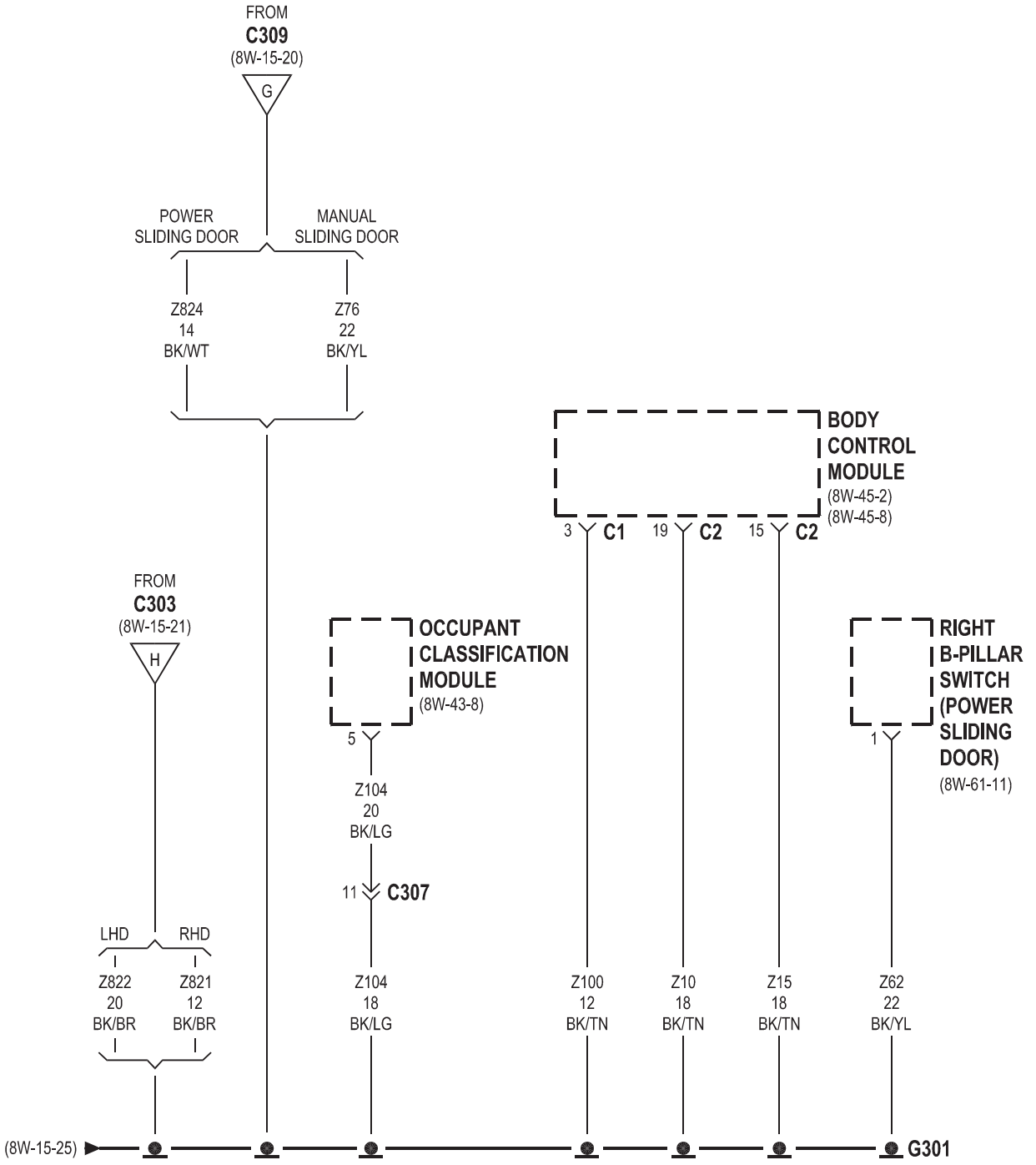
FROM
C309
(8W-15-20)
G
POWER
SLIDING DOOR
MANUAL
SLIDING DOOR
Z824
14
BK/WT
Z76
22
BK/YL
BODY
CONTROL
MODULE
(8W-45-2)
(8W-45-8)
3 C1
19 C2
15 C2
FROM
C303
(8W-15-21)
H
OCCUPANT
CLASSIFICATION
MODULE
(8W-43-8)
5
Z104
20
BK/LG
11 C307
RIGHT
B-PILLAR
SWITCH
(POWER
SLIDING
DOOR)
(8W-61-11)
1
LHD
RHD
Z822
20
BK/BR
Z821
12
BK/BR
Z104
18
BK/LG
Z100
12
BK/TN
Z10
18
BK/TN
Z15
18
BK/TN
Z62
22
BK/YL
(8W-15-25)
G301

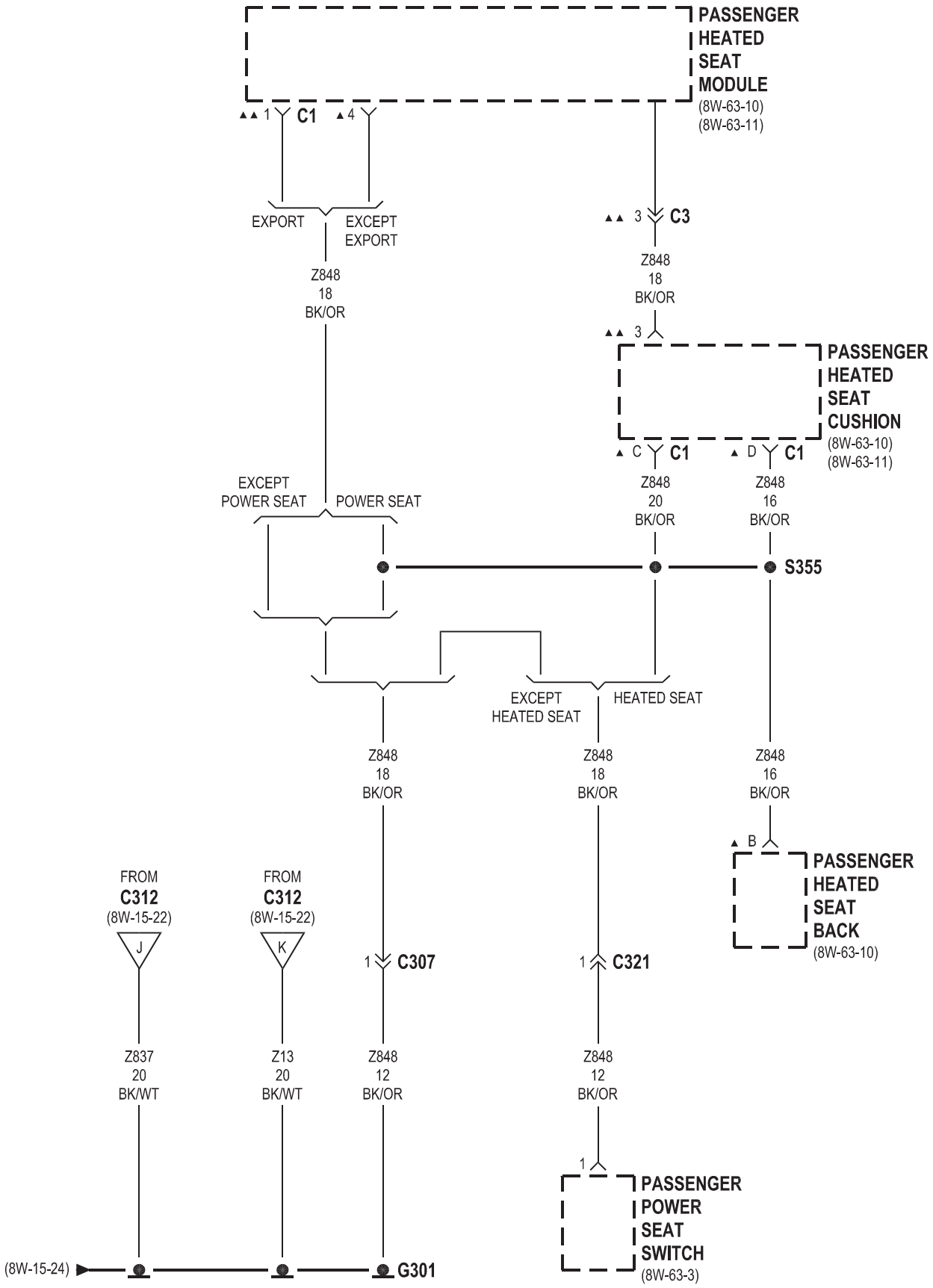
PASSENGER HEATED SEAT MODULE
(8W-63-10)
(8W-63-11)
▲▲ 1 C1
▲ 4
EXPORT
EXCEPT EXPORT
Z848 18 BK/OR
▲▲ 3 C3
Z848 18 BK/OR
▲▲ 3
PASSENGER HEATED SEAT CUSHION
(8W-63-10)
(8W-63-11)
▲ C C1
▲ D C1
Z848 20 BK/OR
Z848 16 BK/OR
EXCEPT POWER SEAT
POWER SEAT
S355
EXCEPT HEATED SEAT
HEATED SEAT
Z848 18 BK/OR
Z848 18 BK/OR
Z848 16 BK/OR
▲ B
PASSENGER HEATED SEAT BACK
(8W-63-10)
FROM C312
(8W-15-22)
J
FROM C312
(8W-15-22)
K
1 C307
1 C321
Z837 20 BK/WT
Z13 20 BK/WT
Z848 12 BK/OR
Z848 12 BK/OR
1
PASSENGER POWER SEAT SWITCH
(8W-63-3)
(8W-15-24)
G301
▲ EXCEPT EXPORT
▲▲ EXPORT

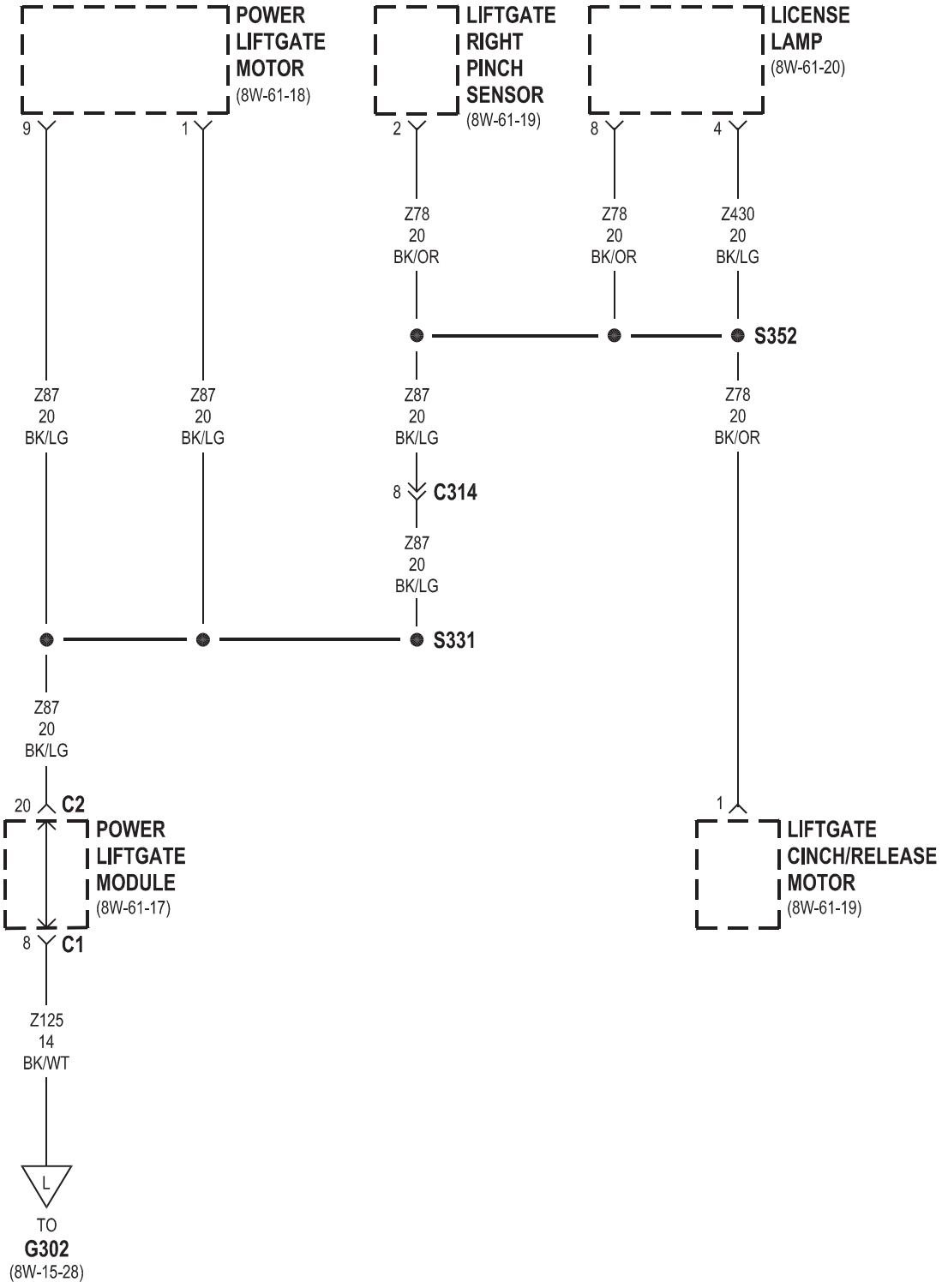
POWER LIFTGATE MOTOR
(8W-61-18)
LIFTGATE RIGHT PINCH SENSOR
(8W-61-19)
LICENSE LAMP
(8W-61-20)
9
1
2
8
4
Z78 20 BK/OR
Z78 20 BK/OR
Z430 20 BK/LG
S352
Z87 20 BK/LG
Z87 20 BK/LG
Z87 20 BK/LG
Z78 20 BK/OR
8 C314
Z87 20 BK/LG
S331
Z87 20 BK/LG
20 C2
POWER LIFTGATE MODULE
(8W-61-17)
8 C1
1
LIFTGATE CINCH/RELEASE MOTOR
(8W-61-19)
Z125 14 BK/WT
L
TO G302
(8W-15-28)

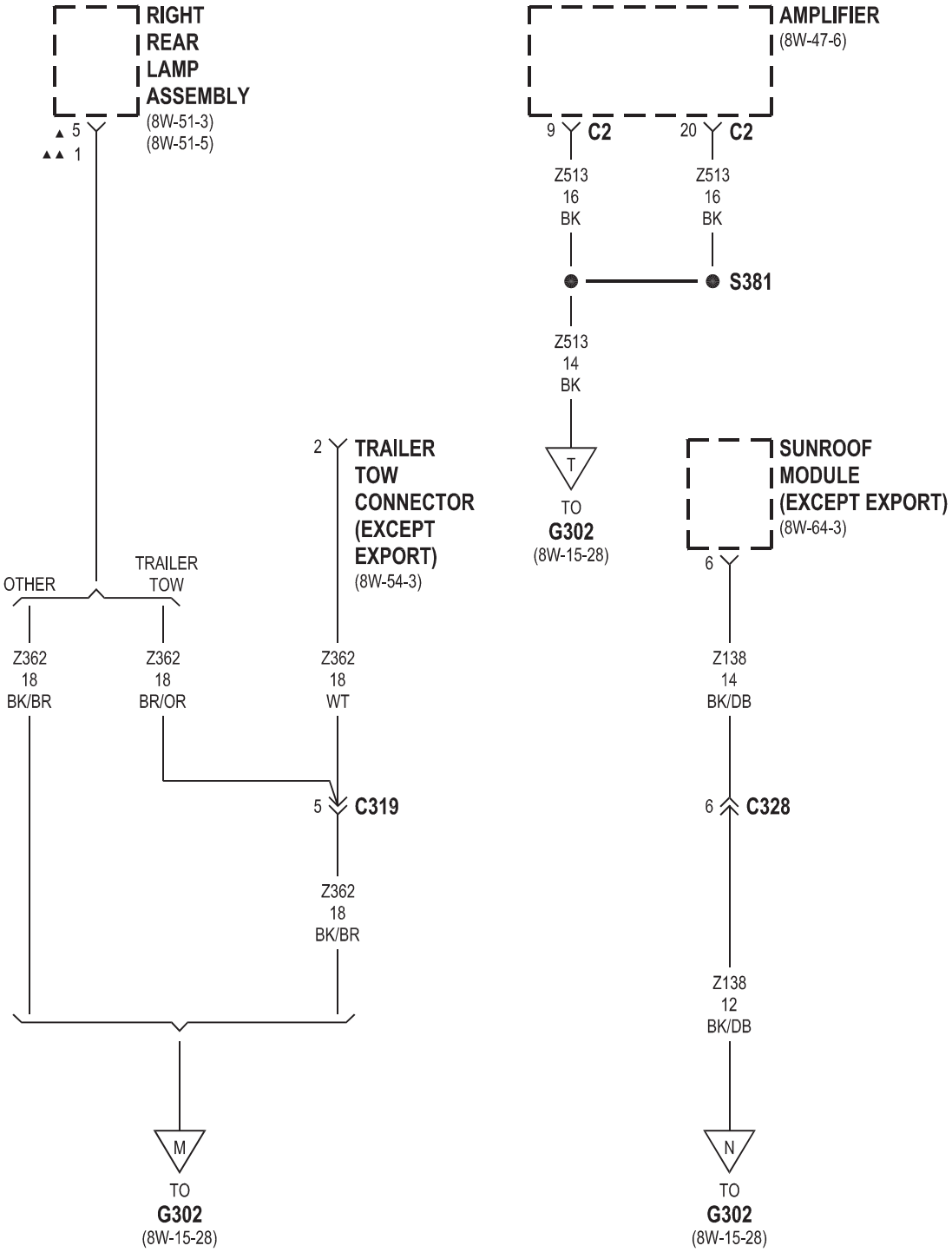

▲ EXCEPT EXPORT
▲▲ EXPORT

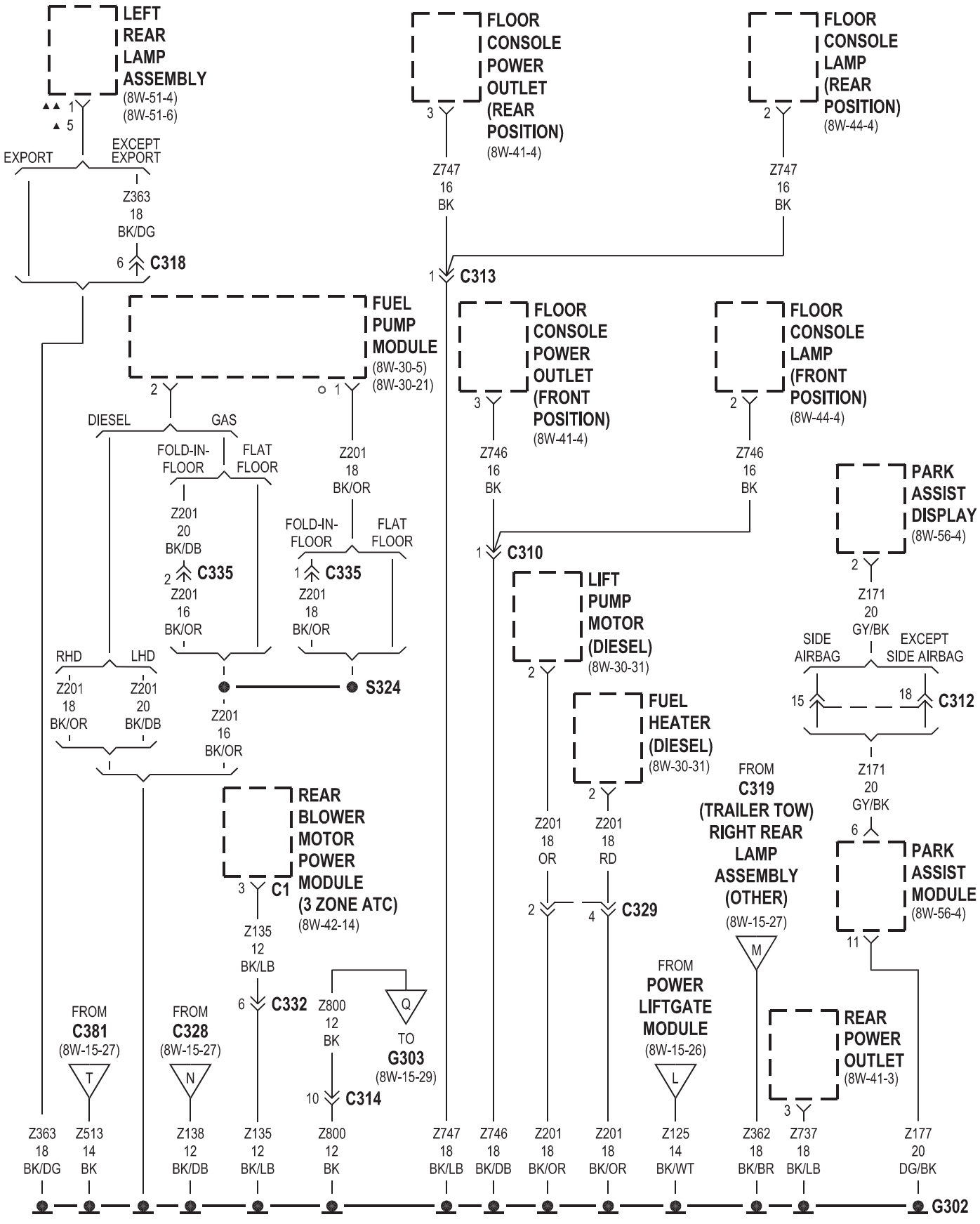
LEFT REAR LAMP ASSEMBLY (8W-51-4) (8W-51-6)
▲▲ 1
▲ 5
EXPORT
EXCEPT EXPORT
Z363 18 BK/DG
6 C318
FLOOR CONSOLE POWER OUTLET (REAR POSITION) (8W-41-4)
3
Z747 16 BK
FLOOR CONSOLE LAMP (REAR POSITION) (8W-44-4)
2
Z747 16 BK
1 C313
FUEL PUMP MODULE (8W-30-5) (8W-30-21)
2
○ 1
DIESEL
GAS
FOLD-IN-FLOOR
FLAT FLOOR
Z201 20 BK/DB
2 C335
Z201 16 BK/OR
Z201 18 BK/OR
FOLD-IN-FLOOR
FLAT FLOOR
1 C335
Z201 18 BK/OR
FLOOR CONSOLE POWER OUTLET (FRONT POSITION) (8W-41-4)
3
Z746 16 BK
FLOOR CONSOLE LAMP (FRONT POSITION) (8W-44-4)
2
Z746 16 BK
1 C310
PARK ASSIST DISPLAY (8W-56-4)
2
Z171 20 GY/BK
SIDE AIRBAG
EXCEPT SIDE AIRBAG
15
18
C312
RHD
LHD
Z201 18 BK/OR
Z201 20 BK/DB
S324
Z201 16 BK/OR
LIFT PUMP MOTOR (DIESEL) (8W-30-31)
2
FUEL HEATER (DIESEL) (8W-30-31)
2
Z201 18 OR
Z201 18 RD
2
4
C329
FROM C319 (TRAILER TOW) RIGHT REAR LAMP ASSEMBLY (OTHER) (8W-15-27)
M
Z171 20 GY/BK
6
PARK ASSIST MODULE (8W-56-4)
11
REAR BLOWER MOTOR POWER MODULE (3 ZONE ATC) (8W-42-14)
3
C1
Z135 12 BK/LB
6 C332
Z800 12 BK
10 C314
Q
TO G303 (8W-15-29)
FROM C381 (8W-15-27)
T
FROM C328 (8W-15-27)
N
FROM POWER LIFTGATE MODULE (8W-15-26)
L
REAR POWER OUTLET (8W-41-3)
3
Z363 18 BK/DG
Z513 14 BK
Z138 12 BK/DB
Z135 12 BK/LB
Z800 12 BK
Z747 18 BK/LB
Z746 18 BK/DB
Z201 18 BK/OR
Z201 18 BK/OR
Z125 14 BK/WT
Z362 18 BK/BR
Z737 18 BK/LB
Z177 20 DG/BK
G302
○ GAS
▲ EXCEPT EXPORT
▲▲ EXPORT

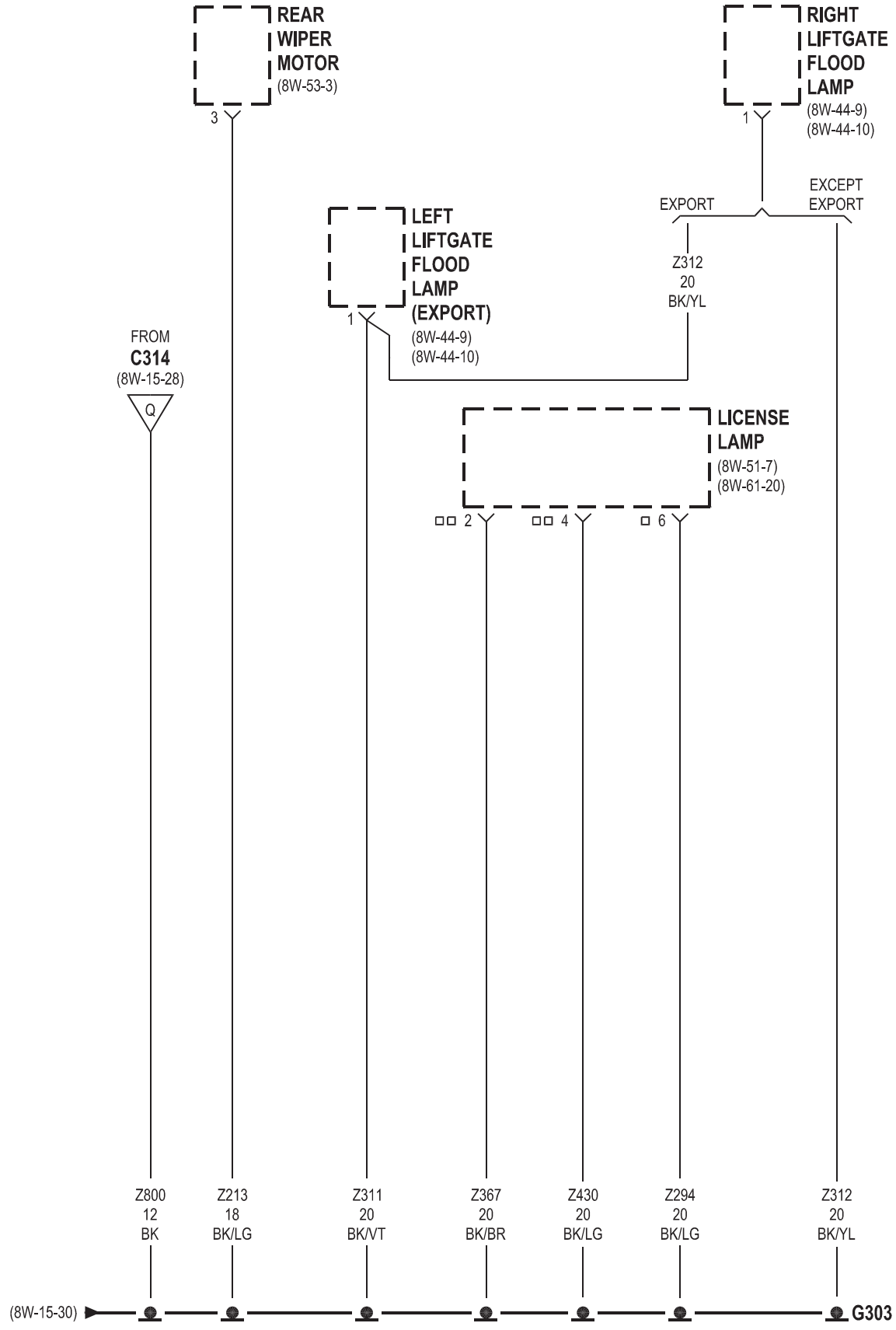

□ POWER LIFTGATE
□□ POWER RELEASE

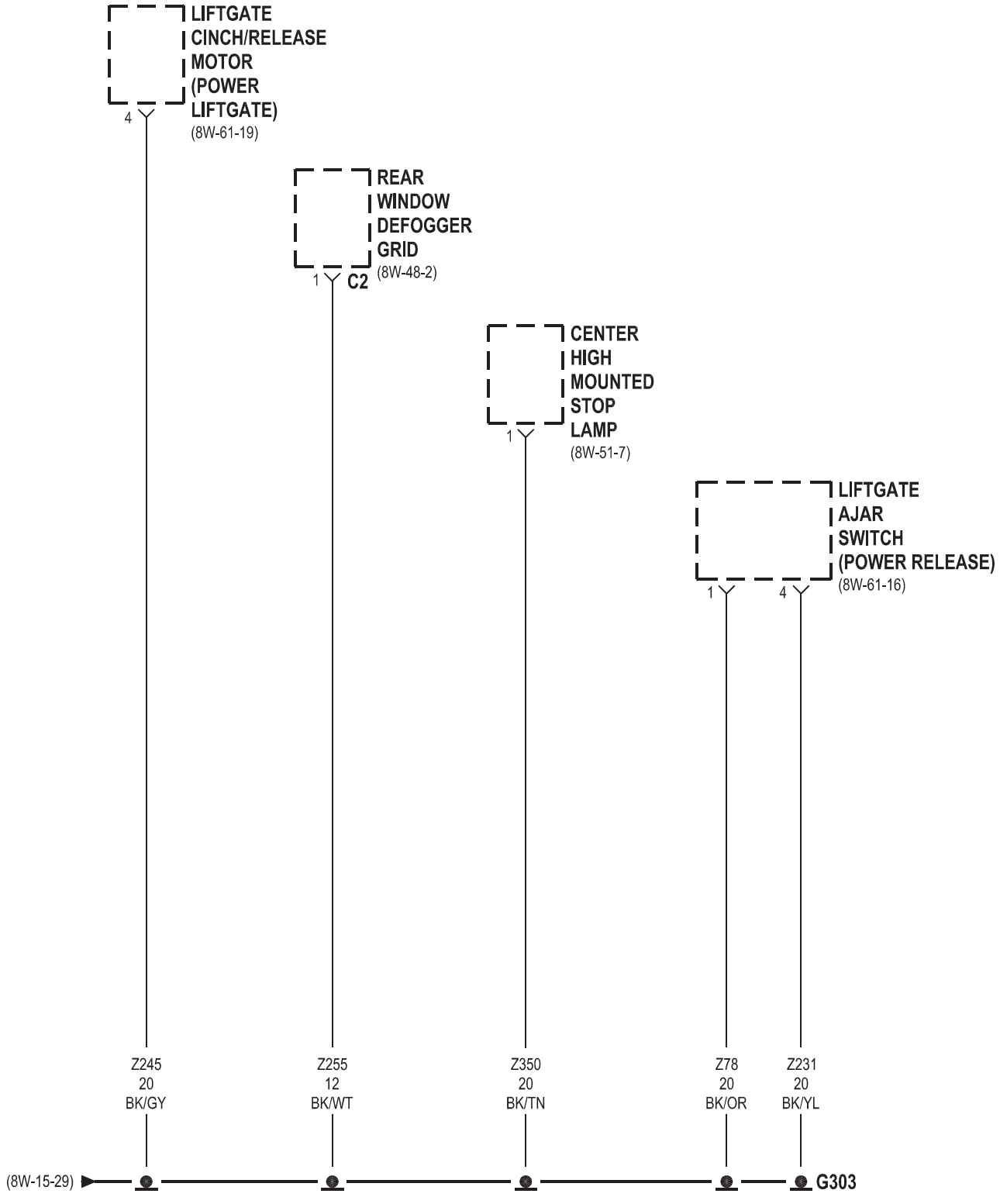
LIFTGATE CINCH/RELEASE MOTOR (POWER LIFTGATE)
(8W-61-19)
4
REAR WINDOW DEFOGGER GRID
(8W-48-2)
1
C2
CENTER HIGH MOUNTED STOP LAMP
(8W-51-7)
1
LIFTGATE AJAR SWITCH (POWER RELEASE)
(8W-61-16)
1
4
Z245 20 BK/GY
Z255 12 BK/WT
Z350 20 BK/TN
Z78 20 BK/OR
Z231 20 BK/YL
(8W-15-29)
G303

8W-18 BUS COMMUNICATIONS

Component	Page
A/C-Heater Control	8W-18-6
Amplifier	8W-18-5
Auto Temp Control	8W-18-6
Battery	8W-18-2
Body Control Module	8W-18-3, 4, 5
Cabin Heater Assist	8W-18-4
CD Changer	8W-18-6
Controller Antilock Brake	8W-18-3, 4
Data Link Connector	8W-18-2, 3, 4, 5
DVD/CD Changer	8W-18-6
Engine Control Module	8W-18-4
Front Control Module	8W-18-3, 4, 5
G100	8W-18-2
G101	8W-18-2
G300	8W-18-2
Hands Free Module	8W-18-6
Instrument Cluster	8W-18-6
Integrated Power Module	8W-18-2, 3, 4, 5
Left Sliding Door Control Module	8W-18-5
Memory Seat/Mirror/Adjustable Pedals Module	8W-18-5
Occupant Classification Module	8W-18-5
Occupant Restraint Controller	8W-18-6
Overhead Console	8W-18-5
Park Assist Module	8W-18-5
Power Liftgate Module	8W-18-5
Powertrain Control Module	8W-18-3
PTC 7	8W-18-2
Radio	8W-18-6
Right Sliding Door Control Module	8W-18-5
Sentry Key Remote Entry Module	8W-18-6
Thatcham Alarm Module	8W-18-3, 4, 6
Transmission Control Module	8W-18-4

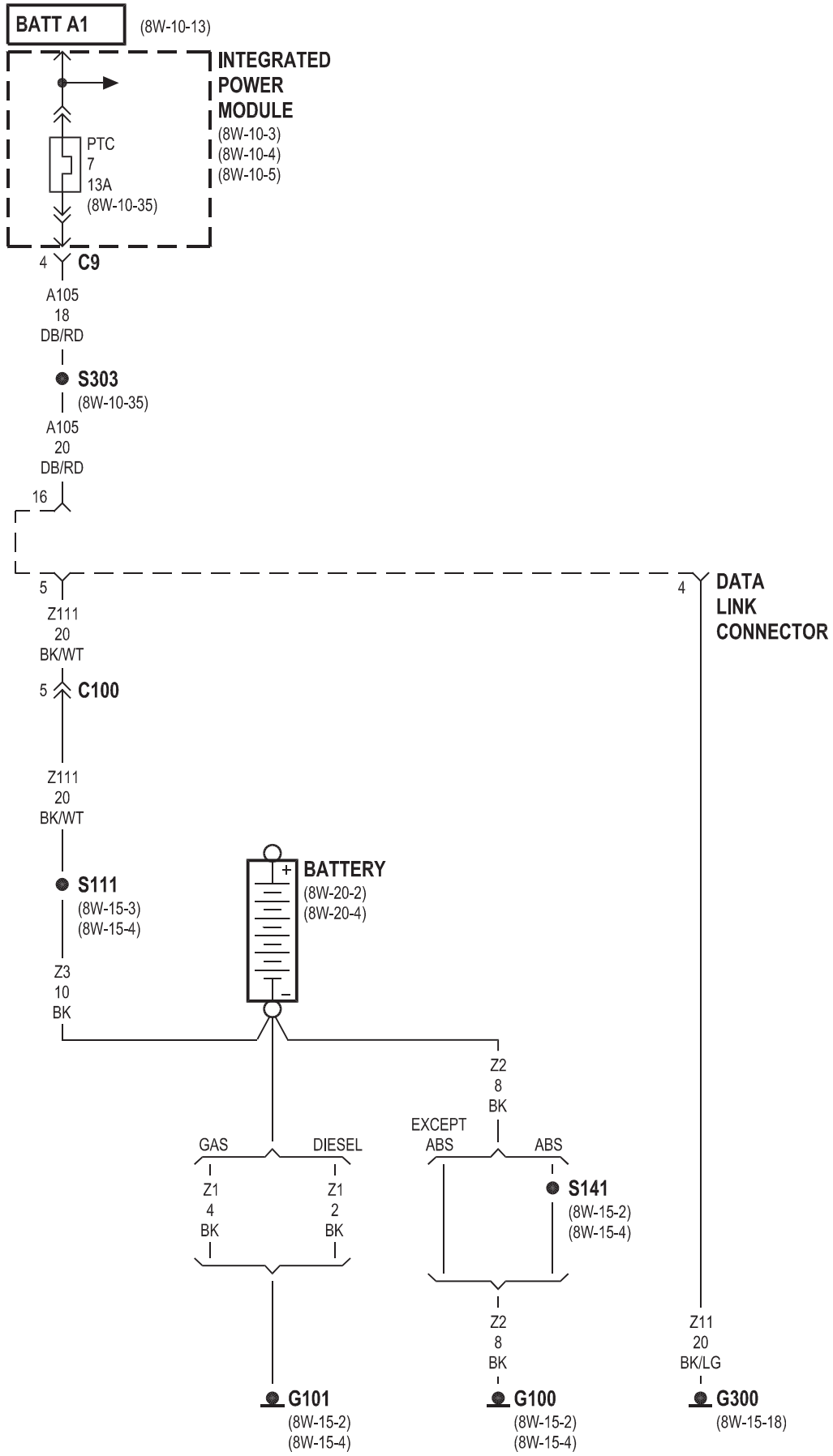
BATT A1
(8W-10-13)
INTEGRATED POWER MODULE
(8W-10-3)
(8W-10-4)
(8W-10-5)
PTC
7
13A
(8W-10-35)
4
C9
A105
18
DB/RD
S303
(8W-10-35)
A105
20
DB/RD
16
5
Z111
20
BK/WT
5
C100
Z111
20
BK/WT
S111
(8W-15-3)
(8W-15-4)
Z3
10
BK
BATTERY
(8W-20-2)
(8W-20-4)
4
DATA LINK CONNECTOR
Z2
8
BK
EXCEPT ABS
ABS
GAS
DIESEL
Z1
4
BK
Z1
2
BK
S141
(8W-15-2)
(8W-15-4)
Z2
8
BK
Z11
20
BK/LG
G101
(8W-15-2)
(8W-15-4)
G100
(8W-15-2)
(8W-15-4)
G300
(8W-15-18)

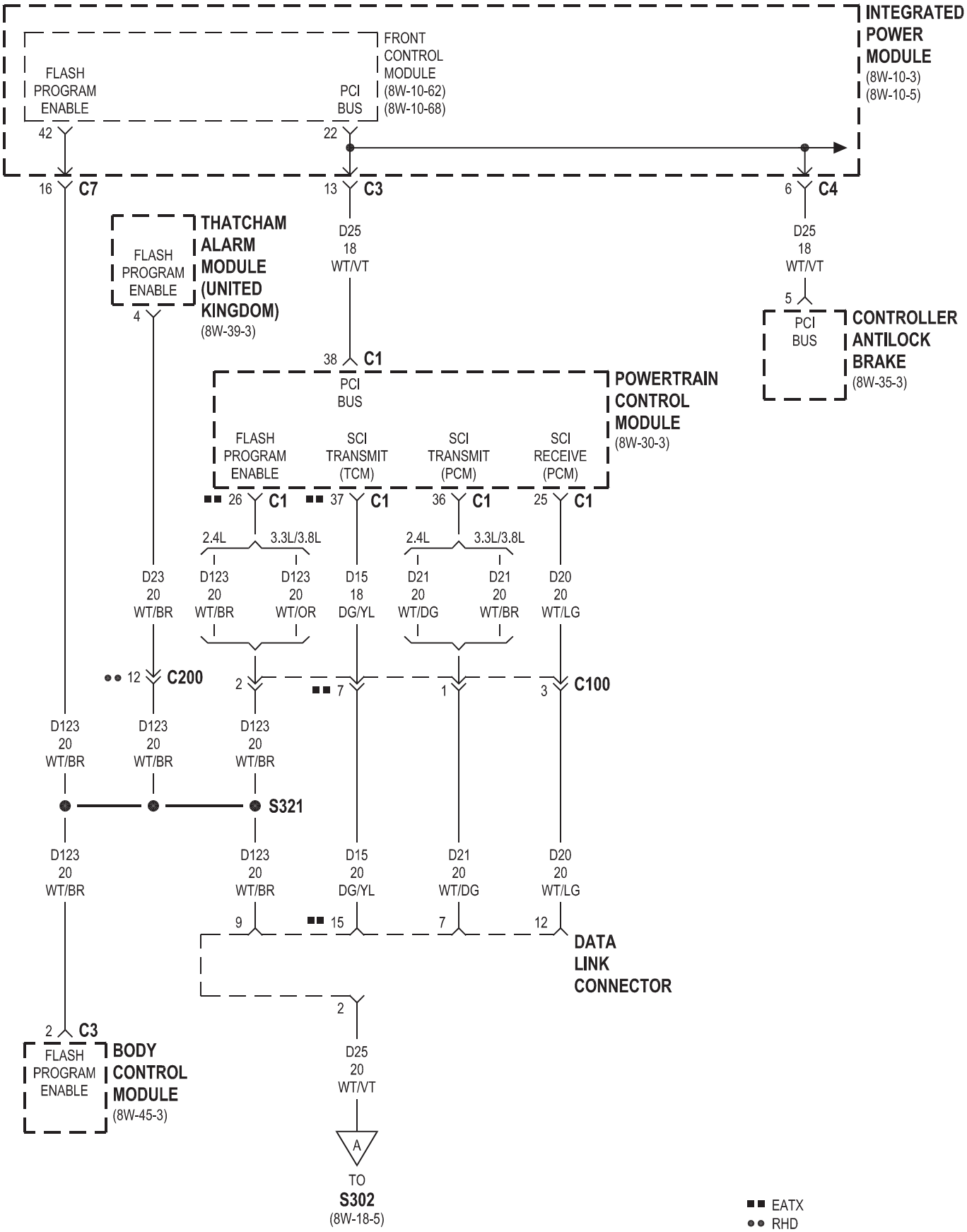
INTEGRATED POWER MODULE
(8W-10-3)
(8W-10-5)
FRONT CONTROL MODULE
(8W-10-62)
(8W-10-68)
FLASH PROGRAM ENABLE
PCI BUS
42
22
16 C7
13 C3
6 C4
THATCHAM ALARM MODULE (UNITED KINGDOM)
(8W-39-3)
FLASH PROGRAM ENABLE
4
D25 18 WT/VT
38 C1
5
PCI BUS
CONTROLLER ANTILOCK BRAKE
(8W-35-3)
POWERTRAIN CONTROL MODULE
(8W-30-3)
FLASH PROGRAM ENABLE
SCI TRANSMIT (TCM)
SCI TRANSMIT (PCM)
SCI RECEIVE (PCM)
26 C1
37 C1
36 C1
25 C1
2.4L
3.3L/3.8L
D23 20 WT/BR
D123 20 WT/BR
D123 20 WT/OR
D15 18 DG/YL
D21 20 WT/DG
D21 20 WT/BR
D20 20 WT/LG
12 C200
2
7
1
3 C100
D123 20 WT/BR
S321
D15 20 DG/YL
9
15
7
12
DATA LINK CONNECTOR
2 C3
FLASH PROGRAM ENABLE
BODY CONTROL MODULE
(8W-45-3)
A
TO S302
(8W-18-5)
EATX
RHD

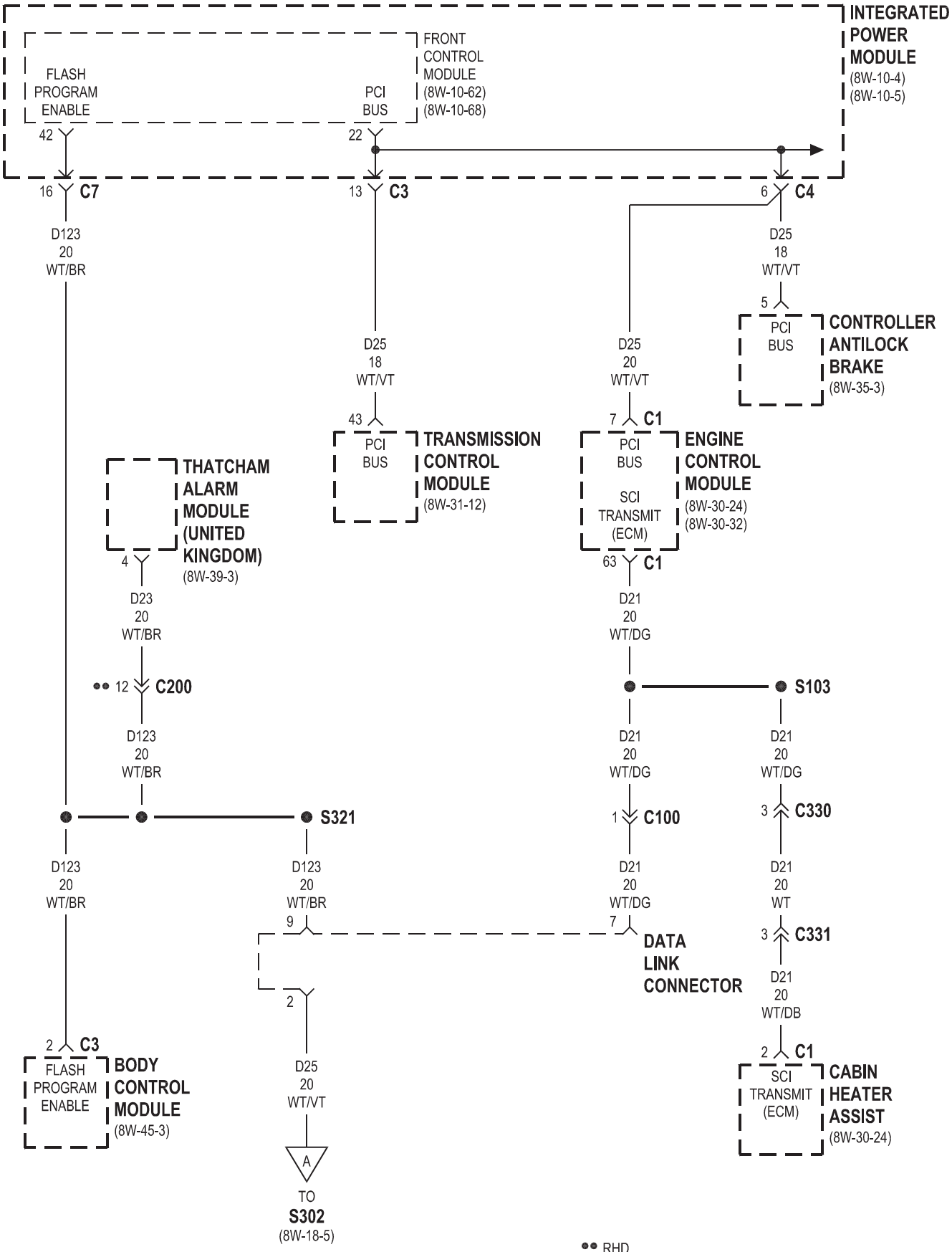
INTEGRATED POWER MODULE
(8W-10-4)
(8W-10-5)
FRONT CONTROL MODULE
(8W-10-62)
(8W-10-68)
FLASH PROGRAM ENABLE
PCI BUS
42
22
16 C7
13 C3
6 C4
D123 20 WT/BR
D25 18 WT/VT
D25 20 WT/VT
5
PCI BUS
CONTROLLER ANTILOCK BRAKE
(8W-35-3)
43
PCI BUS
TRANSMISSION CONTROL MODULE
(8W-31-12)
7 C1
PCI BUS
SCI TRANSMIT (ECM)
ENGINE CONTROL MODULE
(8W-30-24)
(8W-30-32)
63 C1
THATCHAM ALARM MODULE (UNITED KINGDOM)
(8W-39-3)
4
D23 20 WT/BR
•• 12 C200
D123 20 WT/BR
D21 20 WT/DG
S103
D21 20 WT/DG
3 C330
S321
1 C100
D123 20 WT/BR
D123 20 WT/BR
D21 20 WT/DG
D21 20 WT
9
7
DATA LINK CONNECTOR
3 C331
D21 20 WT/DB
2
2 C3
FLASH PROGRAM ENABLE
BODY CONTROL MODULE
(8W-45-3)
D25 20 WT/VT
2 C1
SCI TRANSMIT (ECM)
CABIN HEATER ASSIST
(8W-30-24)
A
TO S302
(8W-18-5)

•• RHD

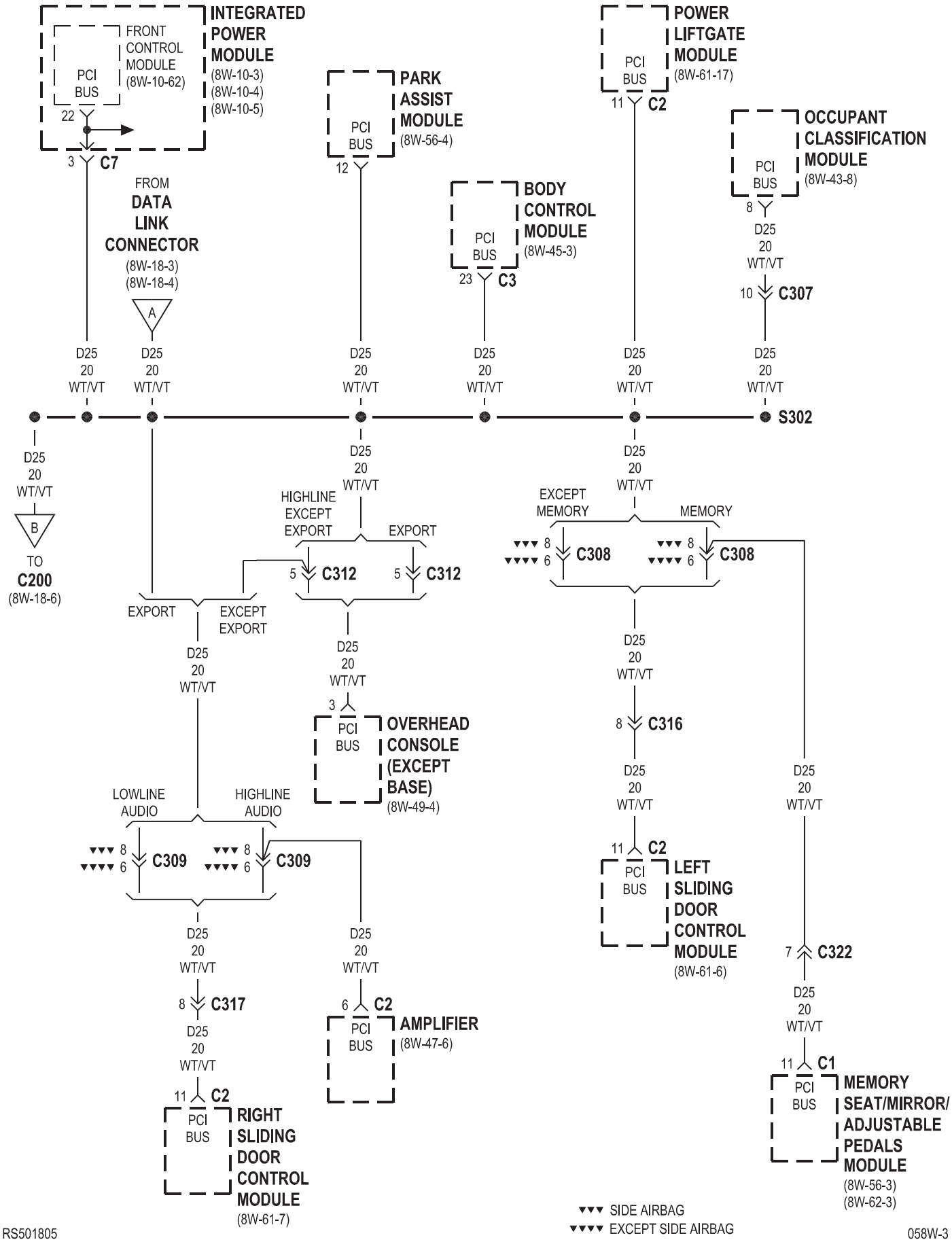
INTEGRATED POWER MODULE (8W-10-3) (8W-10-4) (8W-10-5)
FRONT CONTROL MODULE (8W-10-62)
PCI BUS
22
3 C7
FROM DATA LINK CONNECTOR (8W-18-3) (8W-18-4)
A
PARK ASSIST MODULE (8W-56-4)
12
BODY CONTROL MODULE (8W-45-3)
23 C3
POWER LIFTGATE MODULE (8W-61-17)
11 C2
OCCUPANT CLASSIFICATION MODULE (8W-43-8)
8
D25 20 WT/VT
10 C307
S302
B
TO C200 (8W-18-6)
HIGHLINE EXCEPT EXPORT
EXPORT
5 C312
EXPORT
EXCEPT EXPORT
EXCEPT MEMORY
MEMORY
8 6 C308
3
OVERHEAD CONSOLE (EXCEPT BASE) (8W-49-4)
8 C316
LOWLINE AUDIO
HIGHLINE AUDIO
8 6 C309
8 C317
6 C2
AMPLIFIER (8W-47-6)
LEFT SLIDING DOOR CONTROL MODULE (8W-61-6)
7 C322
RIGHT SLIDING DOOR CONTROL MODULE (8W-61-7)
11 C1
MEMORY SEAT/MIRROR/ ADJUSTABLE PEDALS MODULE (8W-56-3) (8W-62-3)
SIDE AIRBAG
EXCEPT SIDE AIRBAG

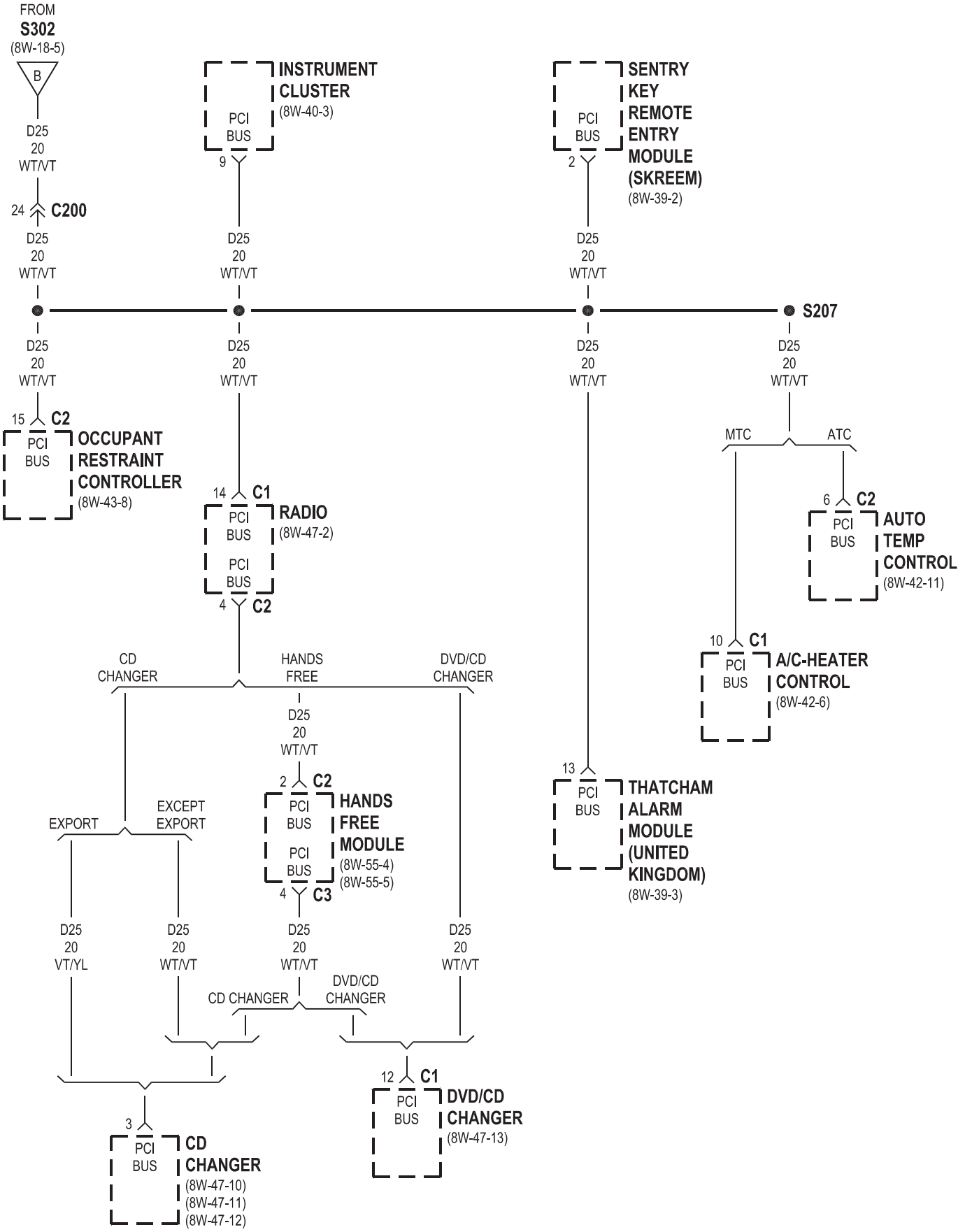
FROM
S302
(8W-18-5)
B
D25
20
WT/VT
24
C200
D25
20
WT/VT
15
C2
PCI
BUS
OCCUPANT
RESTRAINT
CONTROLLER
(8W-43-8)
INSTRUMENT
CLUSTER
(8W-40-3)
PCI
BUS
9
D25
20
WT/VT
14
C1
PCI
BUS
RADIO
(8W-47-2)
PCI
BUS
4
C2
SENTRY
KEY
REMOTE
ENTRY
MODULE
(SKREEM)
(8W-39-2)
PCI
BUS
2
D25
20
WT/VT
S207
D25
20
WT/VT
MTC
ATC
6
C2
PCI
BUS
AUTO
TEMP
CONTROL
(8W-42-11)
10
C1
PCI
BUS
A/C-HEATER
CONTROL
(8W-42-6)
13
PCI
BUS
THATCHAM
ALARM
MODULE
(UNITED
KINGDOM)
(8W-39-3)
CD
CHANGER
HANDS
FREE
DVD/CD
CHANGER
D25
20
WT/VT
2
C2
PCI
BUS
HANDS
FREE
MODULE
(8W-55-4)
(8W-55-5)
PCI
BUS
4
C3
EXPORT
EXCEPT
EXPORT
D25
20
VT/YL
D25
20
WT/VT
D25
20
WT/VT
D25
20
WT/VT
CD CHANGER
DVD/CD
CHANGER
12
C1
PCI
BUS
DVD/CD
CHANGER
(8W-47-13)
3
PCI
BUS
CD
CHANGER
(8W-47-10)
(8W-47-11)
(8W-47-12)

8W-20 CHARGING SYSTEM

Component	Page
Auto Shut Down Relay	8W-20-2
Battery	8W-20-2, 4
Battery Temperature Sensor	8W-20-2, 4
ECM/PCM Relay	8W-20-4
Engine Control Module	8W-20-4
Fuse 16	8W-20-2, 4
Fuse 17	8W-20-2
Fuselink	8W-20-2, 4
G100	8W-20-2, 4
G101	8W-20-2, 3, 4
Generator	8W-20-2, 3, 4
Integrated Power Module	8W-20-2, 4
Powertrain Control Module	8W-20-2, 3
Starter Motor	8W-20-2, 4

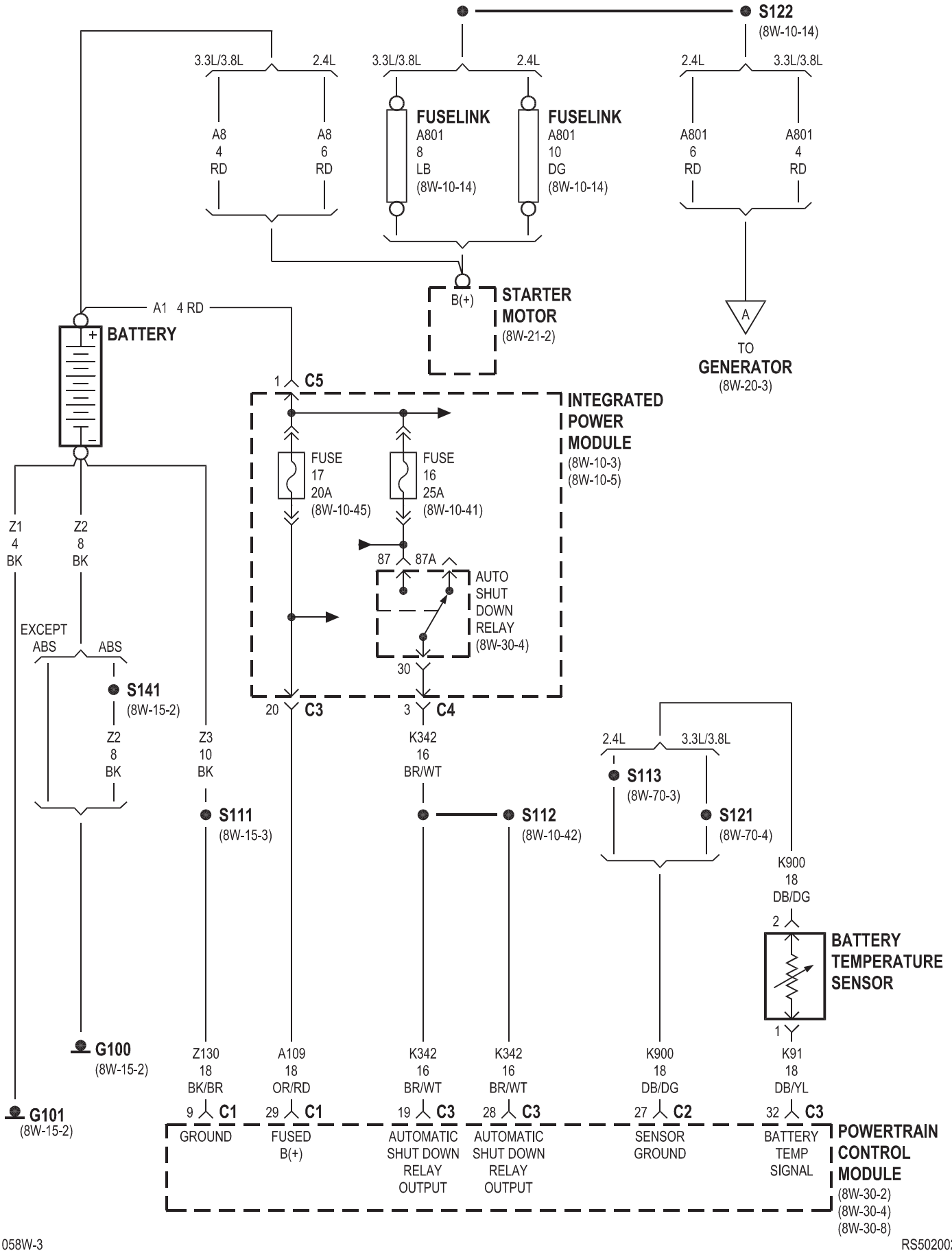
S122
(8W-10-14)
3.3L/3.8L
2.4L
A8
4
RD
A8
6
RD
FUSELINK
A801
8
LB
(8W-10-14)
FUSELINK
A801
10
DG
(8W-10-14)
2.4L
3.3L/3.8L
A801
6
RD
A801
4
RD
B(+)
STARTER
MOTOR
(8W-21-2)
A
TO
GENERATOR
(8W-20-3)
A1 4 RD
BATTERY
1 C5
INTEGRATED
POWER
MODULE
(8W-10-3)
(8W-10-5)
FUSE
17
20A
(8W-10-45)
FUSE
16
25A
(8W-10-41)
87
87A
AUTO
SHUT
DOWN
RELAY
(8W-30-4)
30
Z1
4
BK
Z2
8
BK
EXCEPT
ABS
ABS
S141
(8W-15-2)
Z2
8
BK
Z3
10
BK
20 C3
3 C4
K342
16
BR/WT
2.4L
3.3L/3.8L
S113
(8W-70-3)
S121
(8W-70-4)
S111
(8W-15-3)
S112
(8W-10-42)
K900
18
DB/DG
2
BATTERY
TEMPERATURE
SENSOR
1
G100
(8W-15-2)
G101
(8W-15-2)
Z130
18
BK/BR
A109
18
OR/RD
K342
16
BR/WT
K342
16
BR/WT
K900
18
DB/DG
K91
18
DB/YL
9 C1
29 C1
19 C3
28 C3
27 C2
32 C3
GROUND
FUSED
B(+)
AUTOMATIC
SHUT DOWN
RELAY
OUTPUT
AUTOMATIC
SHUT DOWN
RELAY
OUTPUT
SENSOR
GROUND
BATTERY
TEMP
SIGNAL
POWERTRAIN
CONTROL
MODULE
(8W-30-2)
(8W-30-4)
(8W-30-8)

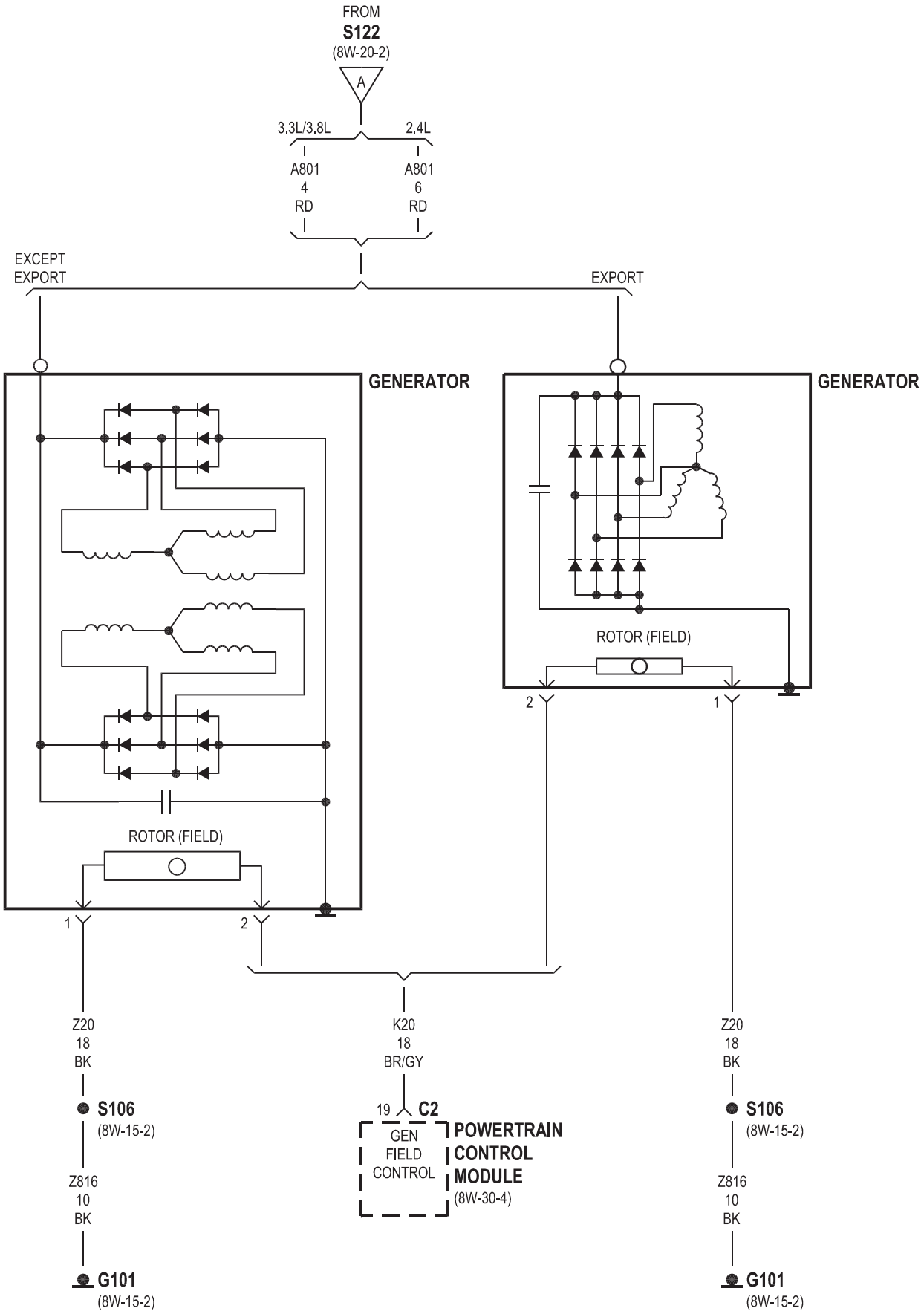
FROM
S122
(8W-20-2)
A
3.3L/3.8L
2.4L
A801
4
RD
A801
6
RD
EXCEPT
EXPORT
EXPORT
GENERATOR
GENERATOR
ROTOR (FIELD)
ROTOR (FIELD)
1
2
2
1
Z20
18
BK
K20
18
BR/GY
Z20
18
BK
S106
(8W-15-2)
19
C2
GEN
FIELD
CONTROL
POWERTRAIN
CONTROL
MODULE
(8W-30-4)
S106
(8W-15-2)
Z816
10
BK
Z816
10
BK
G101
(8W-15-2)
G101
(8W-15-2)

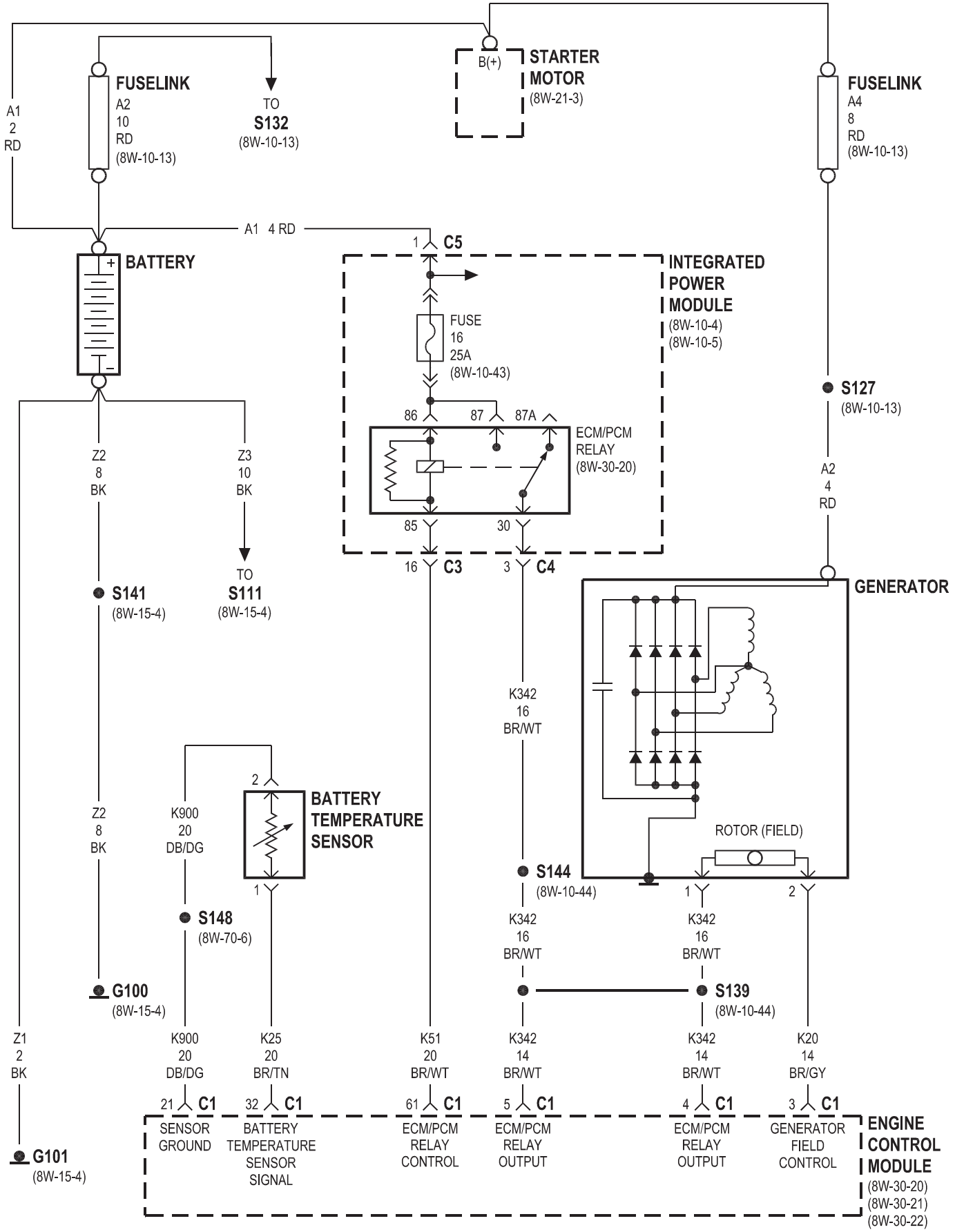
A1
2
RD
FUSELINK
A2
10
RD
(8W-10-13)
TO
S132
(8W-10-13)
B(+)
STARTER
MOTOR
(8W-21-3)
FUSELINK
A4
8
RD
(8W-10-13)
A1 4 RD
BATTERY
1
C5
INTEGRATED
POWER
MODULE
(8W-10-4)
(8W-10-5)
FUSE
16
25A
(8W-10-43)
86
87
87A
ECM/PCM
RELAY
(8W-30-20)
85
30
16
C3
3
C4
S127
(8W-10-13)
A2
4
RD
Z2
8
BK
Z3
10
BK
TO
S111
(8W-15-4)
S141
(8W-15-4)
GENERATOR
K342
16
BR/WT
2
BATTERY
TEMPERATURE
SENSOR
1
K900
20
DB/DG
Z2
8
BK
ROTOR (FIELD)
S144
(8W-10-44)
1
2
S148
(8W-70-6)
K342
16
BR/WT
K342
16
BR/WT
G100
(8W-15-4)
S139
(8W-10-44)
Z1
2
BK
K900
20
DB/DG
K25
20
BR/TN
K51
20
BR/WT
K342
14
BR/WT
K342
14
BR/WT
K20
14
BR/GY
21
C1
32
C1
61
C1
5
C1
4
C1
3
C1
SENSOR
GROUND
BATTERY
TEMPERATURE
SENSOR
SIGNAL
ECM/PCM
RELAY
CONTROL
ECM/PCM
RELAY
OUTPUT
ECM/PCM
RELAY
OUTPUT
GENERATOR
FIELD
CONTROL
ENGINE
CONTROL
MODULE
(8W-30-20)
(8W-30-21)
(8W-30-22)
G101
(8W-15-4)

8W-21 STARTING SYSTEM

Component	Page
Battery	8W-21-2, 3
Brake Lamp Switch	8W-21-2
Clutch Pedal Interlock Switch	8W-21-2, 3
Engine Control Module	8W-21-3
Front Control Module	8W-21-2
Fuse 9	8W-21-2, 3
Fuselink	8W-21-2, 3
G101	8W-21-2, 3
G300	8W-21-2
Generator	8W-21-2, 3
Ignition Switch	8W-21-2, 3
Integrated Power Module	8W-21-2, 3
Powertrain Control Module	8W-21-2
Starter Motor	8W-21-2, 3
Starter Motor Relay	8W-21-2, 3

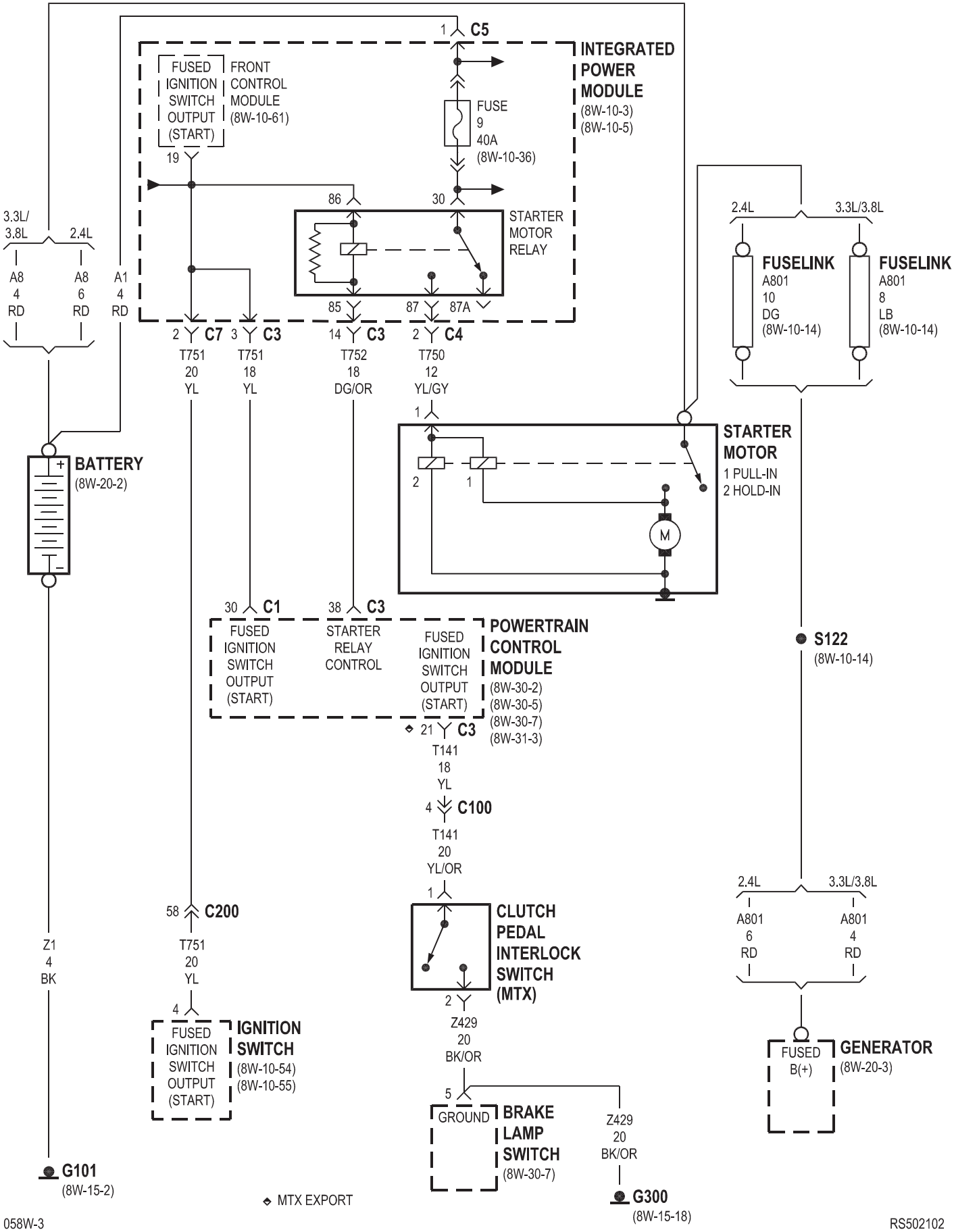
1 C5
INTEGRATED POWER MODULE
(8W-10-3)
(8W-10-5)
FUSED IGNITION SWITCH OUTPUT (START)
FRONT CONTROL MODULE
(8W-10-61)
19
FUSE 9 40A
(8W-10-36)
86
30
STARTER MOTOR RELAY
85
87
87A
3.3L/3.8L
2.4L
A8 4 RD
A8 6 RD
A1 4 RD
2 C7
T751 20 YL
3 C3
T751 18 YL
14 C3
T752 18 DG/OR
2 C4
T750 12 YL/GY
2.4L
3.3L/3.8L
FUSELINK A801 10 DG
(8W-10-14)
FUSELINK A801 8 LB
(8W-10-14)
1
2
1
STARTER MOTOR
1 PULL-IN
2 HOLD-IN
M
BATTERY
(8W-20-2)
30 C1
38 C3
FUSED IGNITION SWITCH OUTPUT (START)
STARTER RELAY CONTROL
FUSED IGNITION SWITCH OUTPUT (START)
POWERTRAIN CONTROL MODULE
(8W-30-2)
(8W-30-5)
(8W-30-7)
(8W-31-3)
S122
(8W-10-14)
21 C3
T141 18 YL
4 C100
T141 20 YL/OR
1
CLUTCH PEDAL INTERLOCK SWITCH (MTX)
2
Z429 20 BK/OR
5
GROUND
BRAKE LAMP SWITCH
(8W-30-7)
Z429 20 BK/OR
G300
(8W-15-18)
2.4L
3.3L/3.8L
A801 6 RD
A801 4 RD
FUSED B(+)
GENERATOR
(8W-20-3)
Z1 4 BK
G101
(8W-15-2)
58 C200
T751 20 YL
4
FUSED IGNITION SWITCH OUTPUT (START)
IGNITION SWITCH
(8W-10-54)
(8W-10-55)
◆ MTX EXPORT

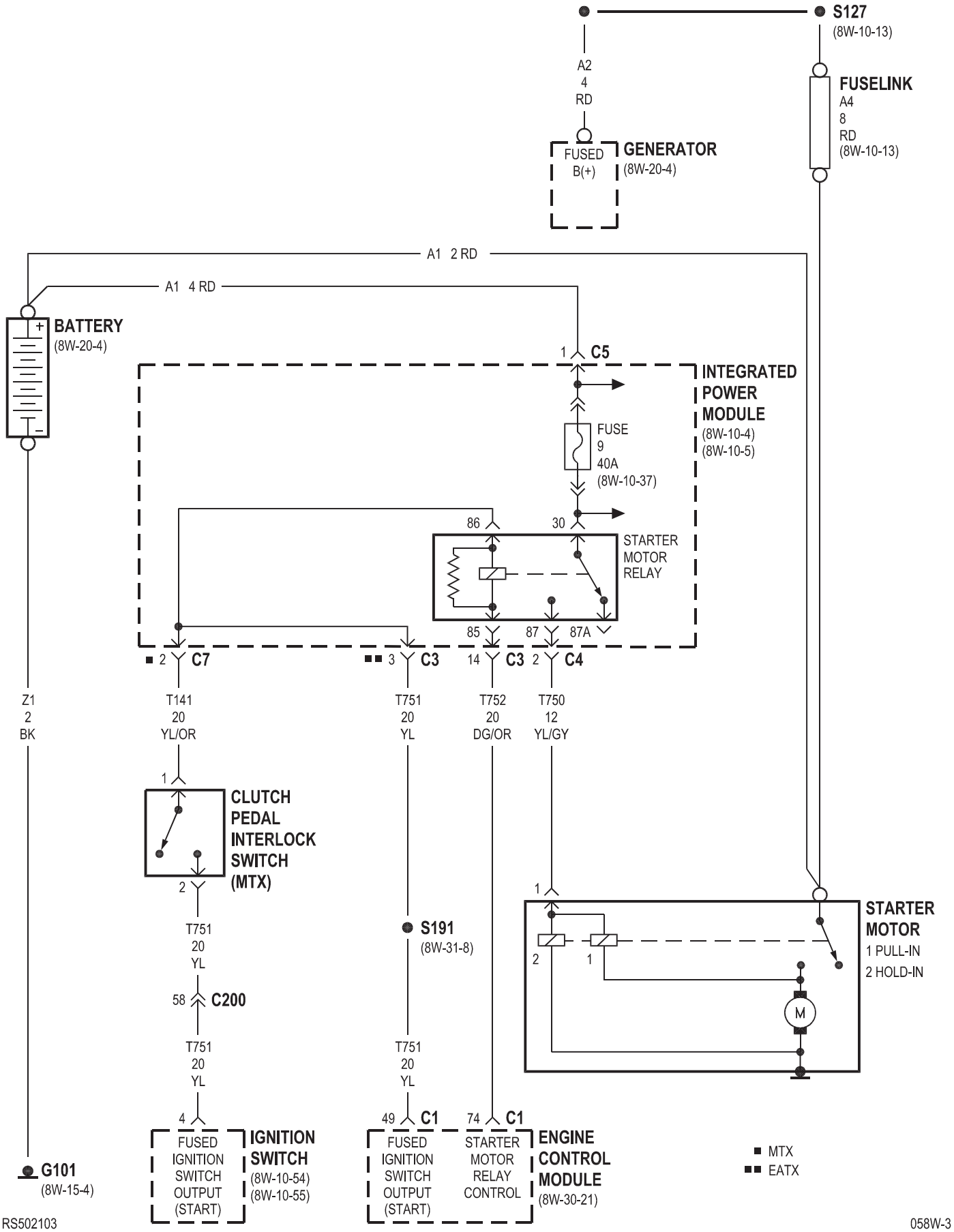
S127
(8W-10-13)
A2
4
RD
FUSELINK
A4
8
RD
(8W-10-13)
FUSED
B(+)
GENERATOR
(8W-20-4)
A1 2 RD
A1 4 RD
BATTERY
(8W-20-4)
1 C5
INTEGRATED
POWER
MODULE
(8W-10-4)
(8W-10-5)
FUSE
9
40A
(8W-10-37)
86
30
STARTER
MOTOR
RELAY
85
87
87A
2 C7
3 C3
14 C3
2 C4
Z1
2
BK
T141
20
YL/OR
T751
20
YL
T752
20
DG/OR
T750
12
YL/GY
1
CLUTCH
PEDAL
INTERLOCK
SWITCH
(MTX)
2
T751
20
YL
58 C200
T751
20
YL
4
S191
(8W-31-8)
T751
20
YL
49 C1
74 C1
1
2
1
STARTER
MOTOR
1 PULL-IN
2 HOLD-IN
M
FUSED
IGNITION
SWITCH
OUTPUT
(START)
IGNITION
SWITCH
(8W-10-54)
(8W-10-55)
FUSED
IGNITION
SWITCH
OUTPUT
(START)
STARTER
MOTOR
RELAY
CONTROL
ENGINE
CONTROL
MODULE
(8W-30-21)
G101
(8W-15-4)
MTX
EATX

8W-30 FUEL/IGNITION SYSTEM

Component	Page
A/C Compressor Clutch	8W-30-20
A/C Compressor Clutch Relay	8W-30-4, 20
A/C Pressure Sensor	8W-30-13, 18, 27
Accelerator Pedal Position Sensor	8W-30-32, 34
Ambient Temperature Sensor	8W-30-8
Auto Shut Down Relay	8W-30-4, 11, 14, 16, 19
Battery	8W-30-2, 6, 10, 15, 20, 28
Battery Temperature Sensor	8W-30-8, 27
Body Control Module	8W-30-5, 21
Boost Pressure Sensor	8W-30-27
Brake Lamp Switch	8W-30-7, 23, 33
Cabin Heater Assist	8W-30-24
Camshaft Position Sensor	8W-30-8, 26
Clockspring	8W-30-5, 25, 32
Clutch Pedal Interlock Switch	8W-30-7
Clutch Pedal Upstop Switch	8W-30-32
Crank Case Ventilation Heater	8W-30-21
Crankshaft Position Sensor	8W-30-12, 17, 26
Data Link Connector	8W-30-3, 24
Dosing Pump	8W-30-24
ECM/PCM Relay	8W-30-20, 22, 26, 28, 30
EGR Solenoid	8W-30-15, 30
Engine Control Module	8W-30-20, 21, 22, 23, 24, 25, 26, 27, 28, 29, 30, 31, 32, 33, 34, 35
Engine Coolant Temp Sensor	8W-30-13, 18, 27
Engine Oil Pressure Sensor	8W-30-23
Engine Oil Pressure Switch	8W-30-7
EVAP/Purge Solenoid	8W-30-4
Front Control Module	8W-30-2, 5, 24, 32
Fuel Heater	8W-30-31
Fuel Heater Relay	8W-30-21, 31
Fuel Injector No. 1	8W-30-14, 19, 29
Fuel Injector No. 2	8W-30-14, 19, 29
Fuel Injector No. 3	8W-30-14, 19, 29
Fuel Injector No. 4	8W-30-14, 19, 29
Fuel Injector No. 5	8W-30-19
Fuel Injector No. 6	8W-30-19
Fuel Pressure Sensor	8W-30-33
Fuel Pressure Solenoid	8W-30-22
Fuel Pump Module	8W-30-5, 21
Fuel Pump Relay	8W-30-5
Fuse 15	8W-30-24, 31
Fuse 16	8W-30-4, 11, 14, 16, 19, 20, 22, 26, 28, 30
Fuse 17	8W-30-2, 5, 21, 31
Fuse 18	8W-30-20
Fuse 26	8W-30-33
Fuselink	8W-30-28

Component	Page
G100	8W-30-2, 6, 15, 21
G101	8W-30-2, 6, 7, 10, 15, 20
G103	8W-30-20, 21, 24
G300	8W-30-7, 23, 32
G302	8W-30-5, 21, 31
Generator	8W-30-4, 21
Glow Plug No. 1	8W-30-28
Glow Plug No. 2	8W-30-28
Glow Plug No. 3	8W-30-28
Glow Plug No. 4	8W-30-28
Glow Plug Relay	8W-30-28
Idle Air Control Motor	8W-30-9
Ignition Coil	8W-30-11, 16
Ignition Switch	8W-30-10
Inlet Air Temperature Sensor	8W-30-12, 17
Integrated Power Module	8W-30-2, 3, 4, 5, 10, 11, 14, 16, 19, 20, 21, 22, 24, 26, 28, 30, 31, 32, 33
Knock Sensor	8W-30-9
Left Speed Control Switch	8W-30-5, 25
Lift Pump Motor	8W-30-31
Lift Pump Relay	8W-30-31
Manifold Absolute Pressure Sensor	8W-30-13, 18
Mass Air Flow Sensor	8W-30-22
Natural Vacuum Leak Detection Assembly	8W-30-10
Oxygen Sensor 1/1 Upstream	8W-30-6
Oxygen Sensor 1/2 Downstream	8W-30-6
Powertrain Control Module	8W-30-2, 3, 4, 5, 6, 7, 8, 9, 10, 11, 12, 13, 14, 15, 16, 17, 18, 19
Radiator Fan Relay	8W-30-11, 16
Radiator Fan Relay No. 1	8W-30-33
Radiator Fan Relay No. 2	8W-30-33
Radiator Fan Relay No. 3	8W-30-33
Right Speed Control Switch	8W-30-5, 25
Speed Control Servo	8W-30-7
Starter Motor Relay	8W-30-5, 21
Throttle Position Sensor	8W-30-12, 17
Transmission Control Module	8W-30-28, 32, 34, 35
Transmission Control Relay	8W-30-28
Transmission Range Sensor	8W-30-32
Vehicle Speed Sensor	8W-30-9, 30
Water In Fuel Sensor	8W-30-32

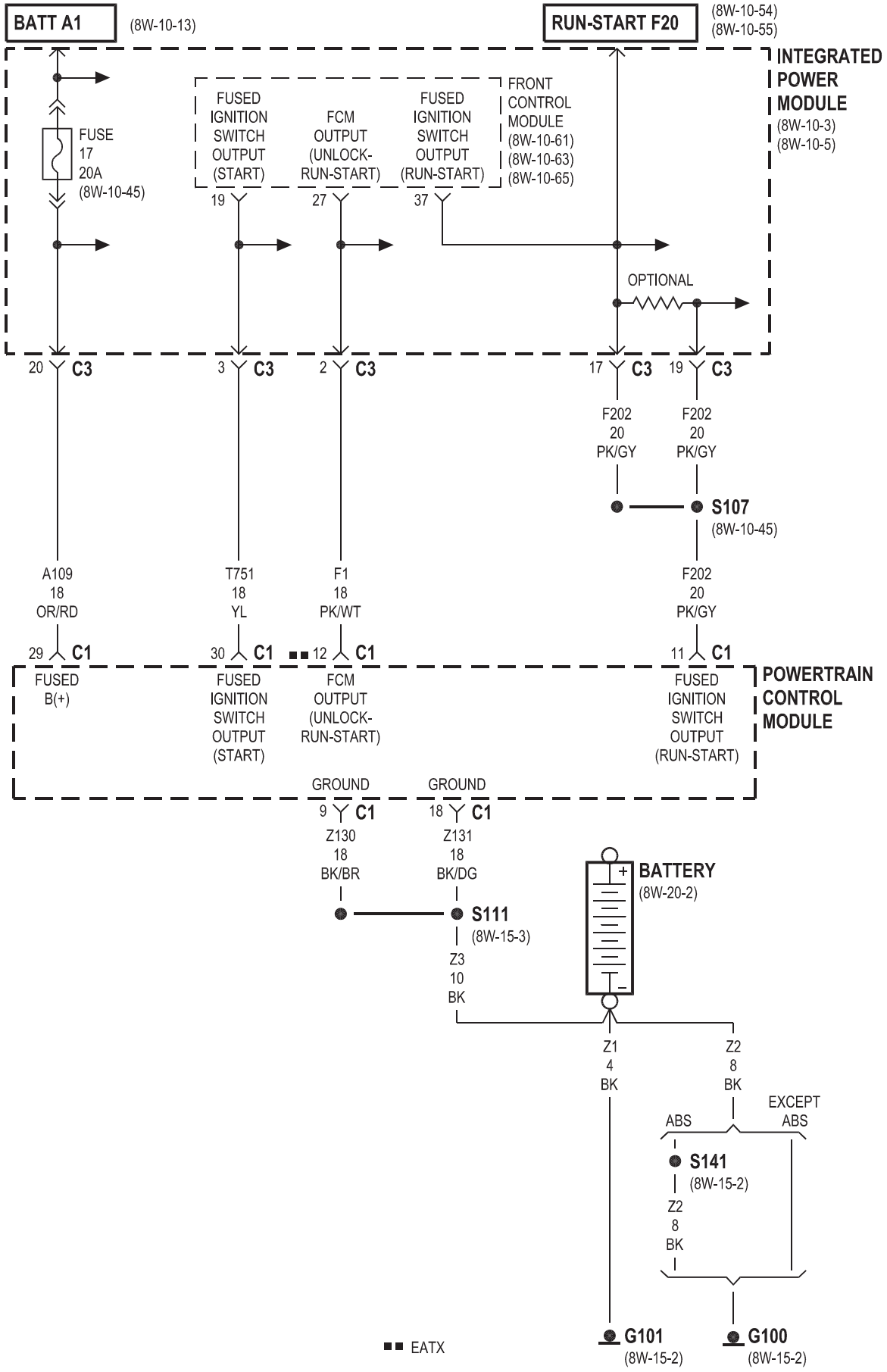
BATT A1
(8W-10-13)
RUN-START F20
(8W-10-54)
(8W-10-55)
INTEGRATED POWER MODULE
(8W-10-3)
(8W-10-5)
FUSE 17 20A (8W-10-45)
FUSED IGNITION SWITCH OUTPUT (START)
FCM OUTPUT (UNLOCK-RUN-START)
FUSED IGNITION SWITCH OUTPUT (RUN-START)
FRONT CONTROL MODULE
(8W-10-61)
(8W-10-63)
(8W-10-65)
19
27
37
OPTIONAL
20 C3
3 C3
2 C3
17 C3
19 C3
F202 20 PK/GY
F202 20 PK/GY
S107
(8W-10-45)
A109 18 OR/RD
T751 18 YL
F1 18 PK/WT
F202 20 PK/GY
29 C1
30 C1
12 C1
11 C1
FUSED B(+)
FUSED IGNITION SWITCH OUTPUT (START)
FCM OUTPUT (UNLOCK-RUN-START)
FUSED IGNITION SWITCH OUTPUT (RUN-START)
POWERTRAIN CONTROL MODULE
GROUND
GROUND
9 C1
18 C1
Z130 18 BK/BR
Z131 18 BK/DG
S111
(8W-15-3)
Z3 10 BK
BATTERY
(8W-20-2)
Z1 4 BK
Z2 8 BK
EXCEPT ABS
ABS
S141
(8W-15-2)
Z2 8 BK
G101
(8W-15-2)
G100
(8W-15-2)
EATX

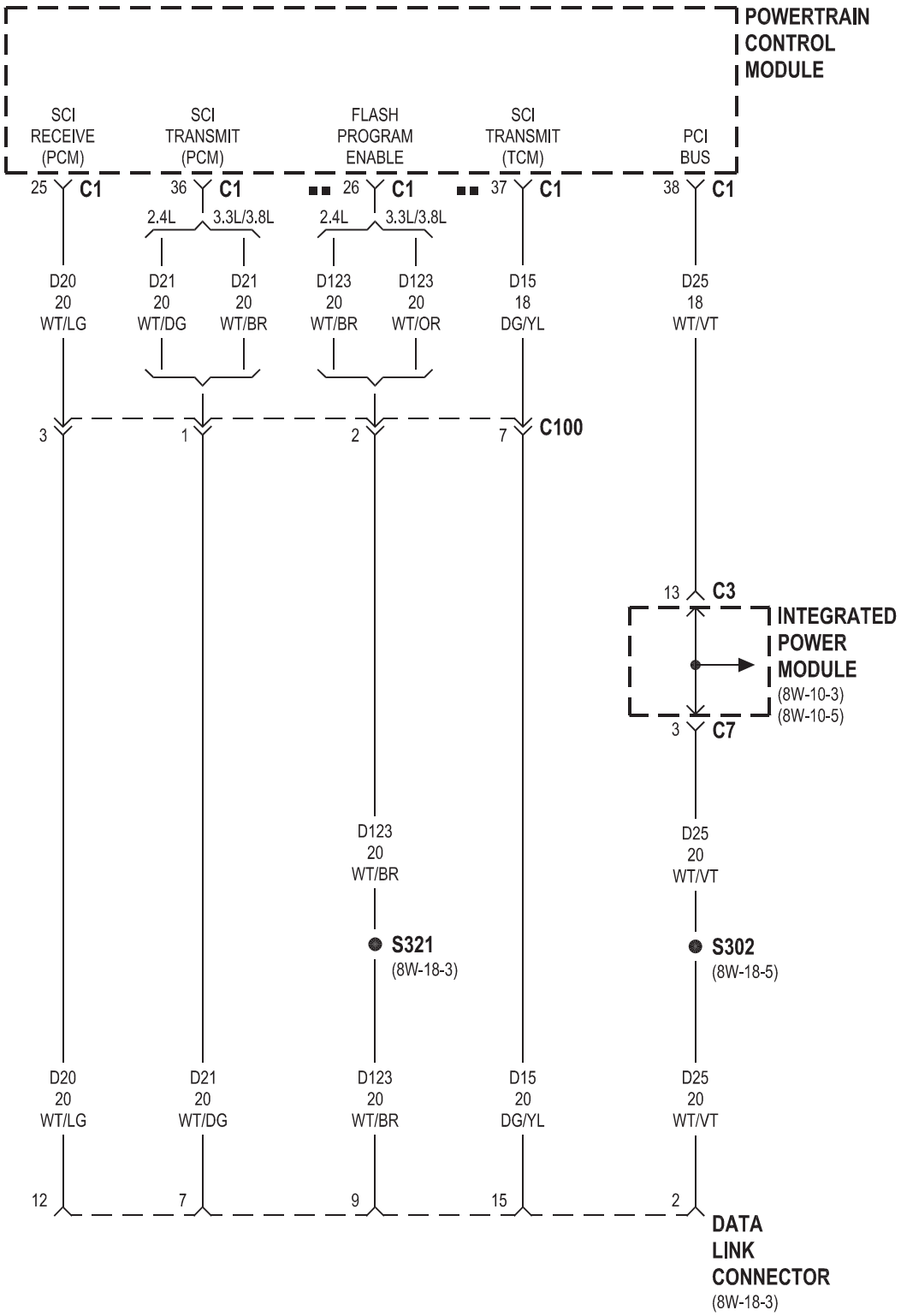
POWERTRAIN CONTROL MODULE
SCI RECEIVE (PCM)
SCI TRANSMIT (PCM)
FLASH PROGRAM ENABLE
SCI TRANSMIT (TCM)
PCI BUS
25 C1
36 C1
26 C1
37 C1
38 C1
2.4L
3.3L/3.8L
2.4L
3.3L/3.8L
D20 20 WT/LG
D21 20 WT/DG
D21 20 WT/BR
D123 20 WT/BR
D123 20 WT/OR
D15 18 DG/YL
D25 18 WT/VT
3
1
2
7
C100
13 C3
INTEGRATED POWER MODULE
(8W-10-3)
(8W-10-5)
3 C7
D123 20 WT/BR
D25 20 WT/VT
S321
(8W-18-3)
S302
(8W-18-5)
D20 20 WT/LG
D21 20 WT/DG
D123 20 WT/BR
D15 20 DG/YL
D25 20 WT/VT
12
7
9
15
2
DATA LINK CONNECTOR
(8W-18-3)

■■ EATX

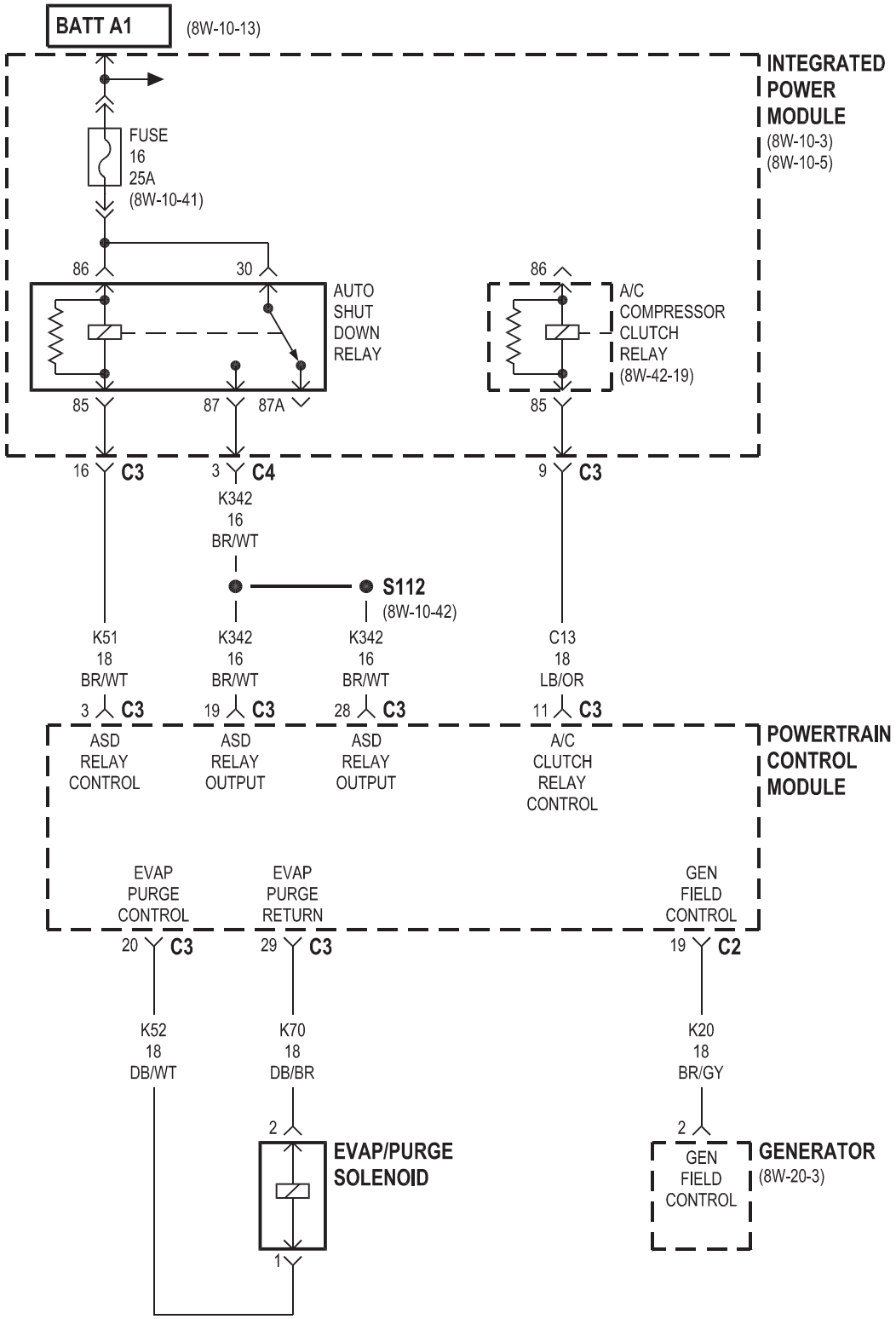
BATT A1
(8W-10-13)
INTEGRATED POWER MODULE
(8W-10-3)
(8W-10-5)
FUSE
16
25A
(8W-10-41)
86
30
AUTO SHUT DOWN RELAY
85
87
87A
86
A/C COMPRESSOR CLUTCH RELAY
(8W-42-19)
85
16 C3
3 C4
9 C3
K342
16
BR/WT
S112
(8W-10-42)
K51
18
BR/WT
K342
16
BR/WT
K342
16
BR/WT
C13
18
LB/OR
3 C3
19 C3
28 C3
11 C3
ASD RELAY CONTROL
ASD RELAY OUTPUT
ASD RELAY OUTPUT
A/C CLUTCH RELAY CONTROL
POWERTRAIN CONTROL MODULE
EVAP PURGE CONTROL
EVAP PURGE RETURN
GEN FIELD CONTROL
20 C3
29 C3
19 C2
K52
18
DB/WT
K70
18
DB/BR
K20
18
BR/GY
2
1
2
EVAP/PURGE SOLENOID
GEN FIELD CONTROL
GENERATOR
(8W-20-3)

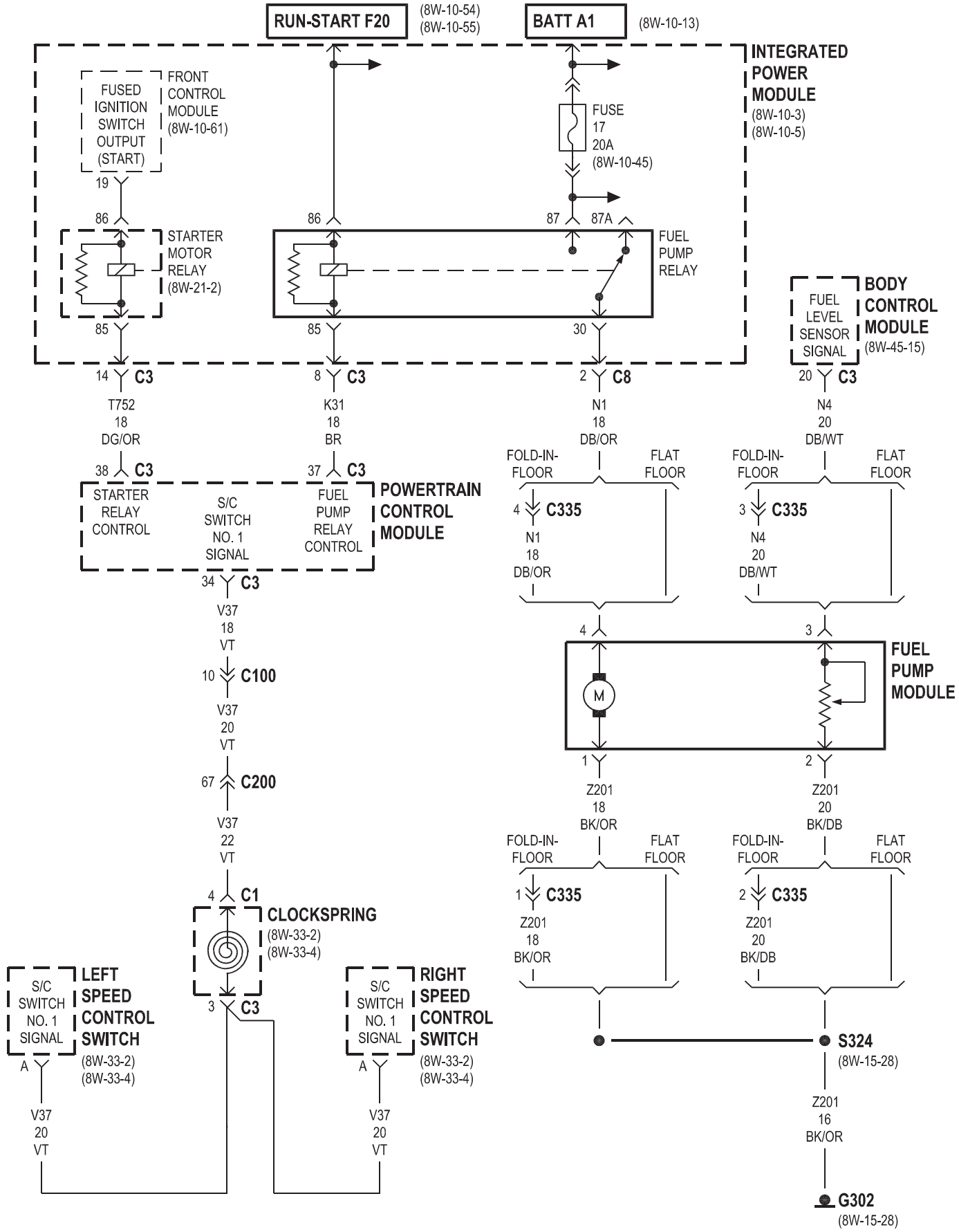
RUN-START F20
(8W-10-54)
(8W-10-55)
BATT A1
(8W-10-13)
INTEGRATED POWER MODULE
(8W-10-3)
(8W-10-5)
FUSED IGNITION SWITCH OUTPUT (START)
FRONT CONTROL MODULE
(8W-10-61)
FUSE 17 20A
(8W-10-45)
STARTER MOTOR RELAY
(8W-21-2)
FUEL PUMP RELAY
BODY CONTROL MODULE
(8W-45-15)
FUEL LEVEL SENSOR SIGNAL
POWERTRAIN CONTROL MODULE
STARTER RELAY CONTROL
S/C SWITCH NO. 1 SIGNAL
FUEL PUMP RELAY CONTROL
T752 18 DG/OR
K31 18 BR
N1 18 DB/OR
N4 20 DB/WT
V37 18 VT
V37 20 VT
V37 22 VT
C100
C200
C1
C3
C8
C335
CLOCKSPRING
(8W-33-2)
(8W-33-4)
LEFT SPEED CONTROL SWITCH
RIGHT SPEED CONTROL SWITCH
FOLD-IN-FLOOR
FLAT FLOOR
FUEL PUMP MODULE
Z201 18 BK/OR
Z201 20 BK/DB
Z201 16 BK/OR
S324
(8W-15-28)
G302
(8W-15-28)

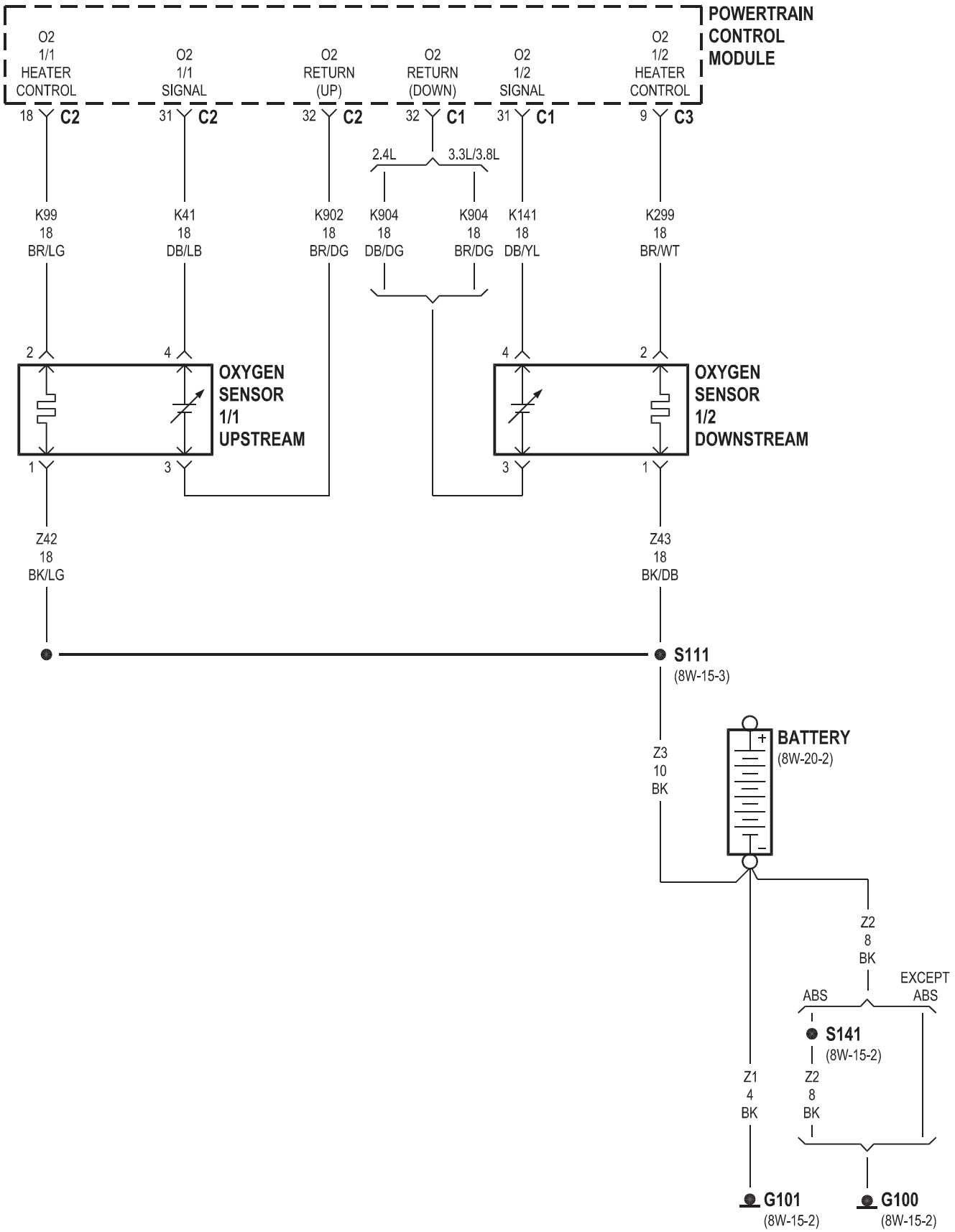
POWERTRAIN CONTROL MODULE
O2 1/1 HEATER CONTROL
18 C2
O2 1/1 SIGNAL
31 C2
O2 RETURN (UP)
32 C2
O2 RETURN (DOWN)
32 C1
2.4L
3.3L/3.8L
O2 1/2 SIGNAL
31 C1
O2 1/2 HEATER CONTROL
9 C3
K99 18 BR/LG
K41 18 DB/LB
K902 18 BR/DG
K904 18 DB/DG
K904 18 BR/DG
K141 18 DB/YL
K299 18 BR/WT
OXYGEN SENSOR 1/1 UPSTREAM
OXYGEN SENSOR 1/2 DOWNSTREAM
Z42 18 BK/LG
Z43 18 BK/DB
S111
(8W-15-3)
BATTERY
(8W-20-2)
Z3 10 BK
Z2 8 BK
ABS
EXCEPT ABS
S141
(8W-15-2)
Z1 4 BK
Z2 8 BK
G101
(8W-15-2)
G100
(8W-15-2)

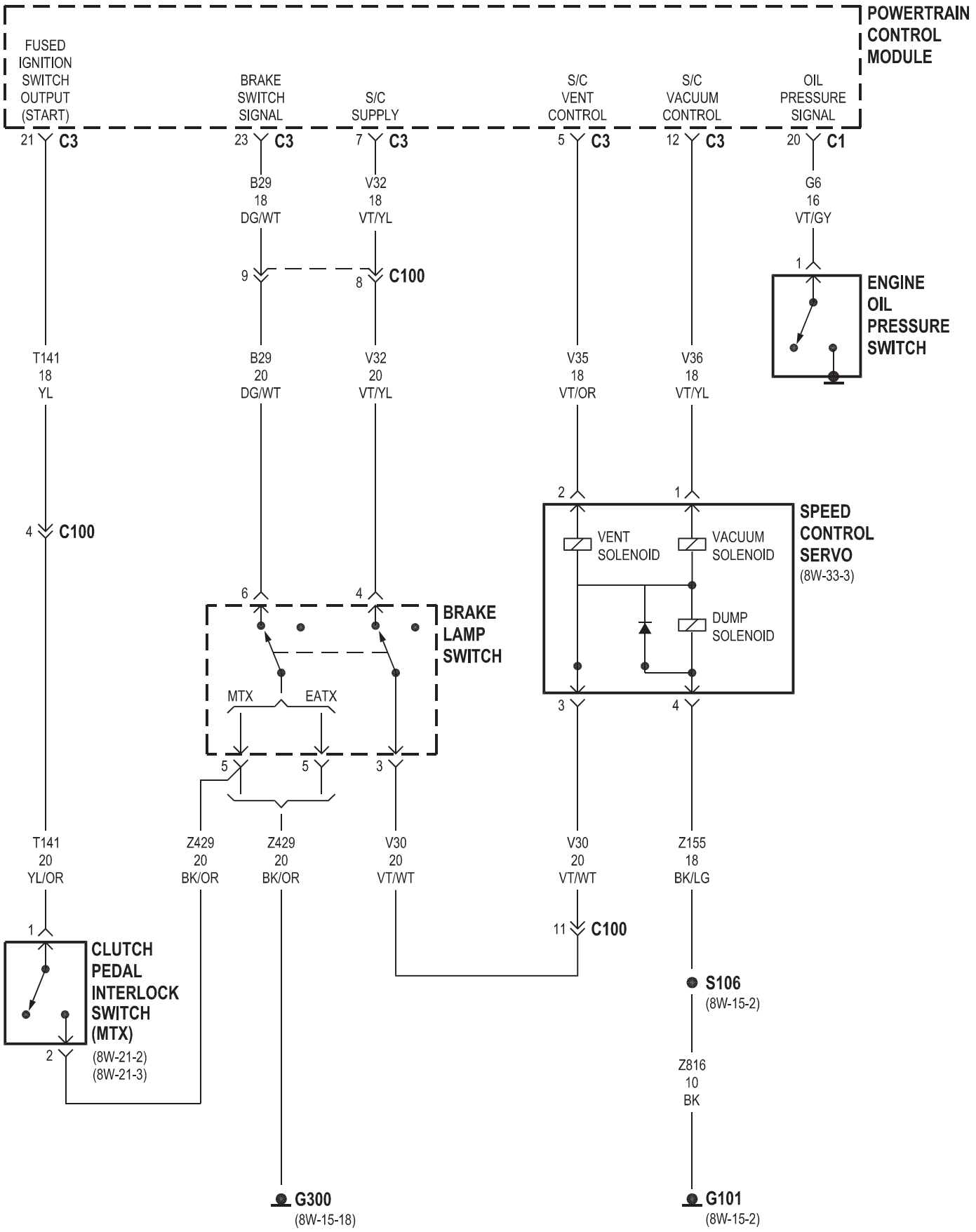
POWERTRAIN CONTROL MODULE
FUSED IGNITION SWITCH OUTPUT (START)
BRAKE SWITCH SIGNAL
S/C SUPPLY
S/C VENT CONTROL
S/C VACUUM CONTROL
OIL PRESSURE SIGNAL
21 C3
23 C3
7 C3
5 C3
12 C3
20 C1
B29 18 DG/WT
V32 18 VT/YL
G6 16 VT/GY
9
8 C100
1
ENGINE OIL PRESSURE SWITCH
T141 18 YL
B29 20 DG/WT
V32 20 VT/YL
V35 18 VT/OR
V36 18 VT/YL
2
1
4 C100
VENT SOLENOID
VACUUM SOLENOID
DUMP SOLENOID
SPEED CONTROL SERVO
(8W-33-3)
6
4
BRAKE LAMP SWITCH
MTX
EATX
3
4
5
5
3
T141 20 YL/OR
Z429 20 BK/OR
Z429 20 BK/OR
V30 20 VT/WT
V30 20 VT/WT
Z155 18 BK/LG
1
11 C100
CLUTCH PEDAL INTERLOCK SWITCH (MTX)
2
(8W-21-2)
(8W-21-3)
S106
(8W-15-2)
Z816 10 BK
G300
(8W-15-18)
G101
(8W-15-2)

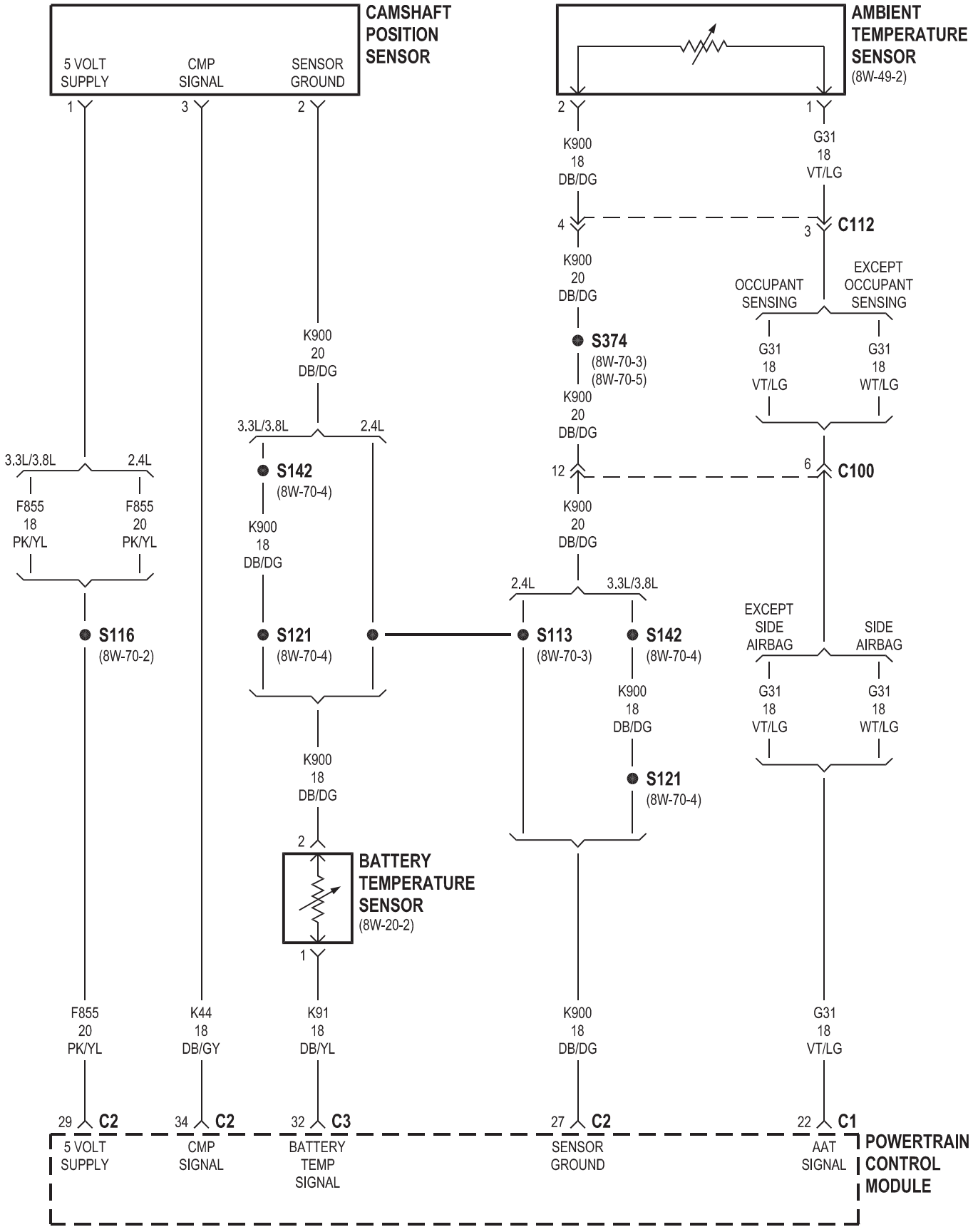
CAMSHAFT POSITION SENSOR
5 VOLT SUPPLY
CMP SIGNAL
SENSOR GROUND
1
3
2
AMBIENT TEMPERATURE SENSOR
(8W-49-2)
2
1
K900 18 DB/DG
G31 18 VT/LG
4
3
C112
K900 20 DB/DG
OCCUPANT SENSING
EXCEPT OCCUPANT SENSING
S374
(8W-70-3)
(8W-70-5)
G31 18 VT/LG
G31 18 WT/LG
K900 20 DB/DG
12
6
C100
K900 20 DB/DG
3.3L/3.8L
2.4L
F855 18 PK/YL
F855 20 PK/YL
S142
(8W-70-4)
K900 18 DB/DG
2.4L
3.3L/3.8L
EXCEPT SIDE AIRBAG
SIDE AIRBAG
S116
(8W-70-2)
S121
(8W-70-4)
S113
(8W-70-3)
S142
(8W-70-4)
G31 18 VT/LG
G31 18 WT/LG
K900 18 DB/DG
S121
(8W-70-4)
K900 18 DB/DG
2
BATTERY TEMPERATURE SENSOR
(8W-20-2)
1
F855 20 PK/YL
K44 18 DB/GY
K91 18 DB/YL
K900 18 DB/DG
G31 18 VT/LG
29
C2
34
C2
32
C3
27
C2
22
C1
5 VOLT SUPPLY
CMP SIGNAL
BATTERY TEMP SIGNAL
SENSOR GROUND
AAT SIGNAL
POWERTRAIN CONTROL MODULE

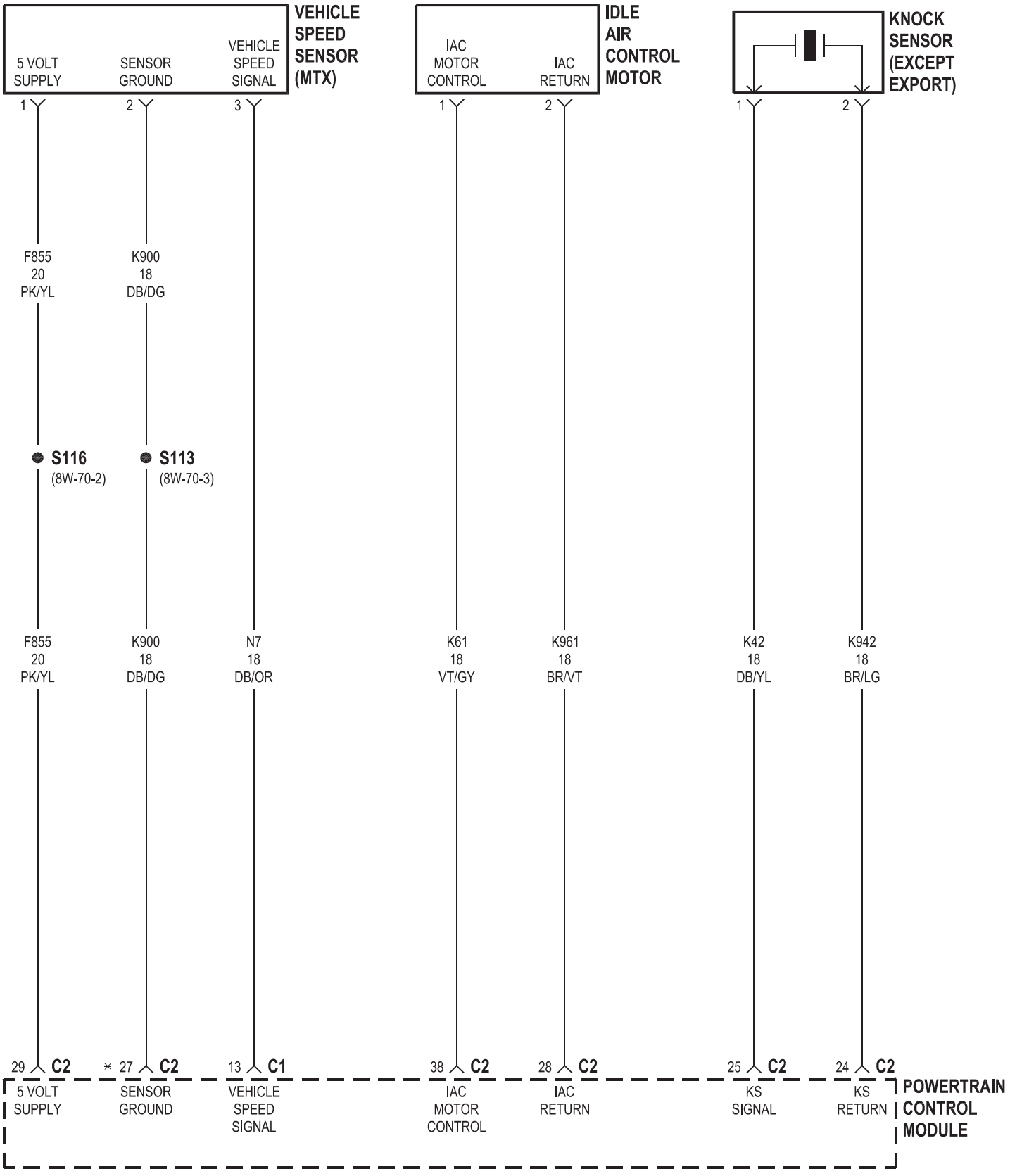
VEHICLE SPEED SENSOR (MTX)
5 VOLT SUPPLY
SENSOR GROUND
VEHICLE SPEED SIGNAL
1
2
3
F855 20 PK/YL
K900 18 DB/DG
S116 (8W-70-2)
S113 (8W-70-3)
F855 20 PK/YL
K900 18 DB/DG
N7 18 DB/OR
IDLE AIR CONTROL MOTOR
IAC MOTOR CONTROL
IAC RETURN
1
2
K61 18 VT/GY
K961 18 BR/VT
KNOCK SENSOR (EXCEPT EXPORT)
1
2
K42 18 DB/YL
K942 18 BR/LG
29 C2
* 27 C2
13 C1
38 C2
28 C2
25 C2
24 C2
5 VOLT SUPPLY
SENSOR GROUND
VEHICLE SPEED SIGNAL
IAC MOTOR CONTROL
IAC RETURN
KS SIGNAL
KS RETURN
POWERTRAIN CONTROL MODULE

* 2.4L

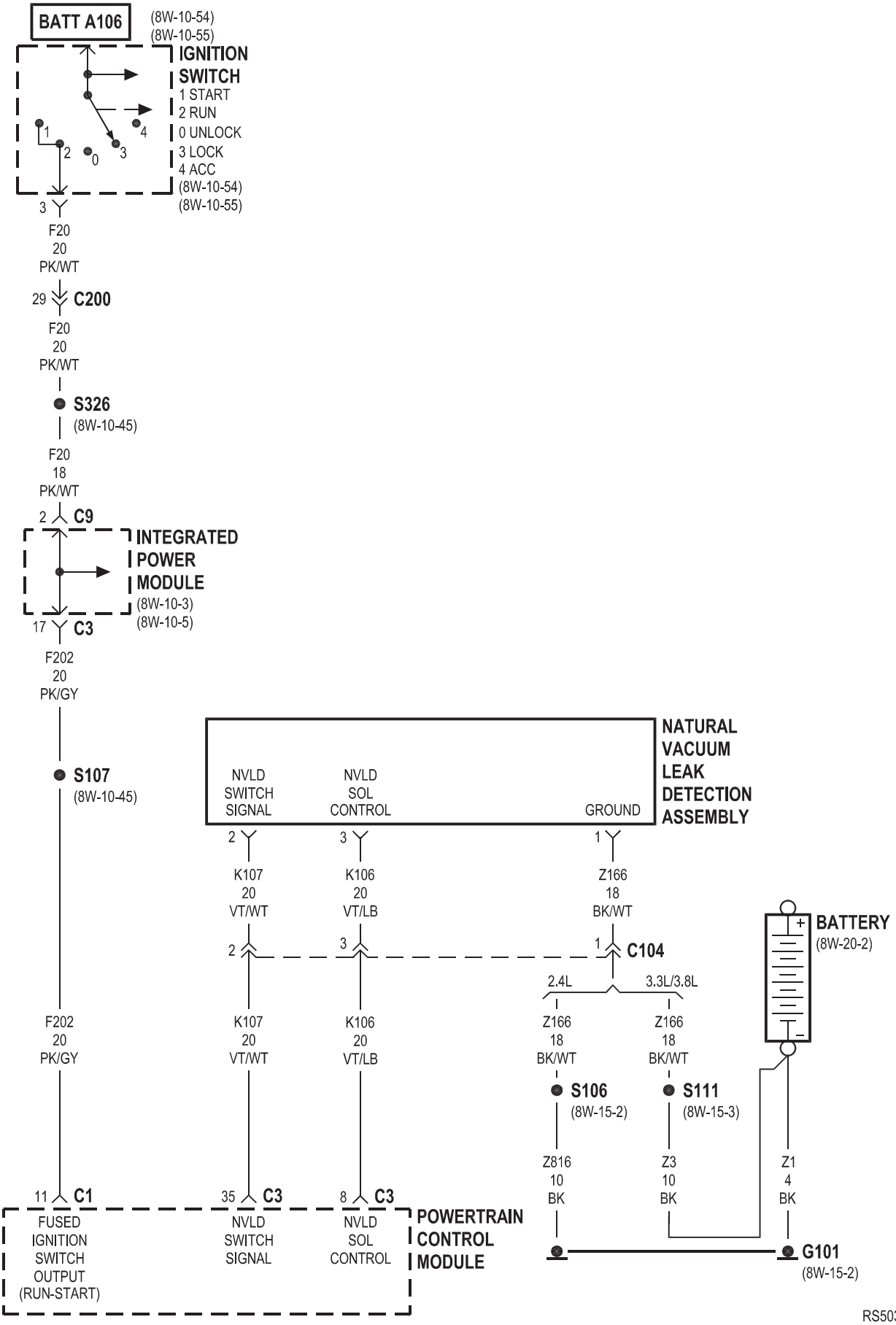
BATT A106
(8W-10-54)
(8W-10-55)
IGNITION SWITCH
1 START
2 RUN
0 UNLOCK
3 LOCK
4 ACC
(8W-10-54)
(8W-10-55)
3
F20
20
PK/WT
29 C200
F20
20
PK/WT
S326
(8W-10-45)
F20
18
PK/WT
2 C9
INTEGRATED POWER MODULE
(8W-10-3)
(8W-10-5)
17 C3
F202
20
PK/GY
S107
(8W-10-45)
F202
20
PK/GY
11 C1
FUSED IGNITION SWITCH OUTPUT (RUN-START)
NVLD SWITCH SIGNAL
NVLD SOL CONTROL
GROUND
NATURAL VACUUM LEAK DETECTION ASSEMBLY
2
3
1
K107
20
VT/WT
K106
20
VT/LB
Z166
18
BK/WT
2
3
1 C104
2.4L
3.3L/3.8L
K107
20
VT/WT
K106
20
VT/LB
Z166
18
BK/WT
Z166
18
BK/WT
S106
(8W-15-2)
S111
(8W-15-3)
35 C3
8 C3
NVLD SWITCH SIGNAL
NVLD SOL CONTROL
POWERTRAIN CONTROL MODULE
Z816
10
BK
Z3
10
BK
Z1
4
BK
BATTERY
(8W-20-2)
G101
(8W-15-2)

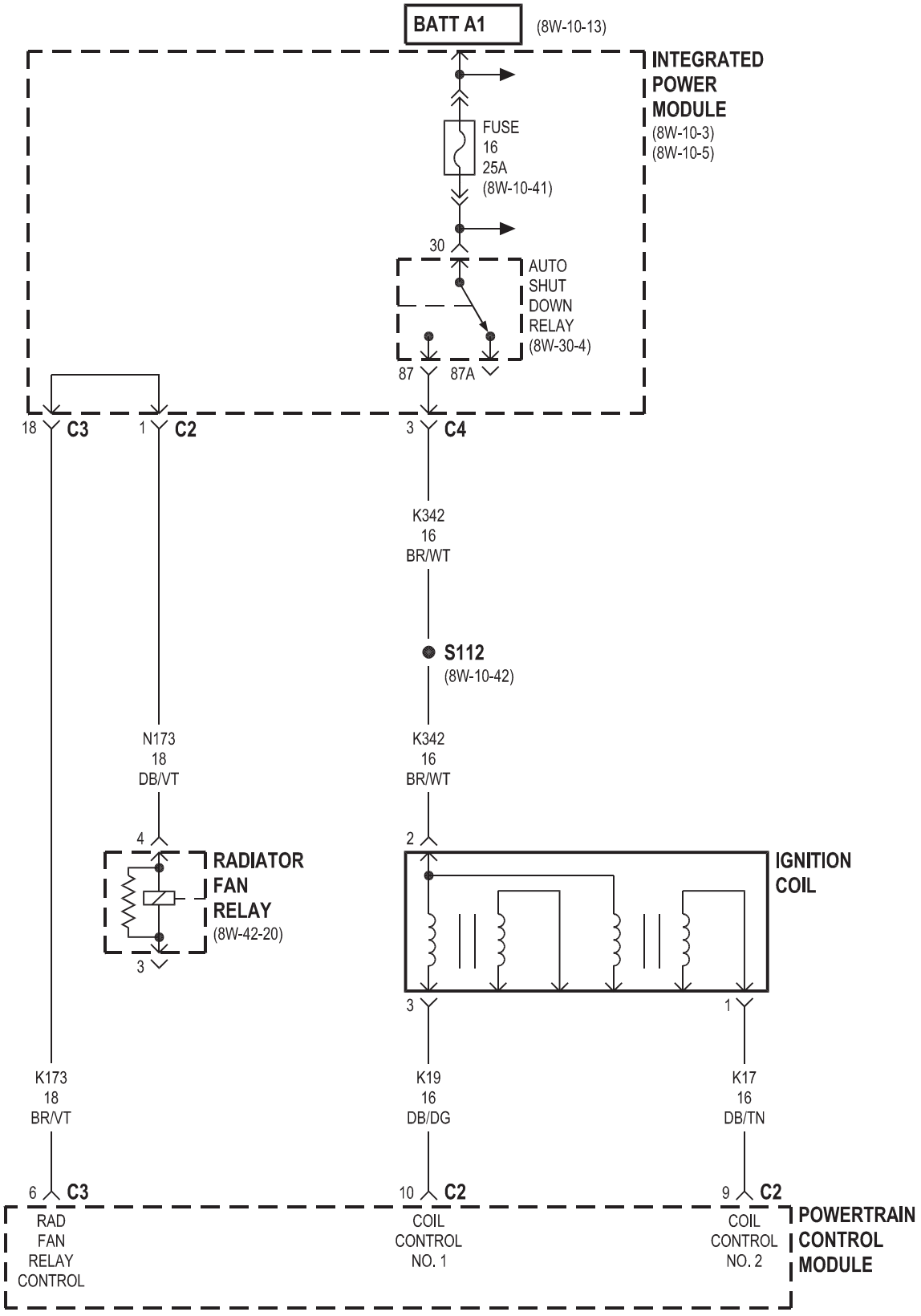
BATT A1
(8W-10-13)
INTEGRATED POWER MODULE
(8W-10-3)
(8W-10-5)
FUSE 16 25A
(8W-10-41)
30
AUTO SHUT DOWN RELAY
(8W-30-4)
87
87A
18 C3
1 C2
3 C4
K342 16 BR/WT
S112
(8W-10-42)
N173 18 DB/VT
K342 16 BR/WT
4
RADIATOR FAN RELAY
(8W-42-20)
3
2
IGNITION COIL
3
1
K173 18 BR/VT
K19 16 DB/DG
K17 16 DB/TN
6 C3
10 C2
9 C2
RAD FAN RELAY CONTROL
COIL CONTROL NO. 1
COIL CONTROL NO. 2
POWERTRAIN CONTROL MODULE

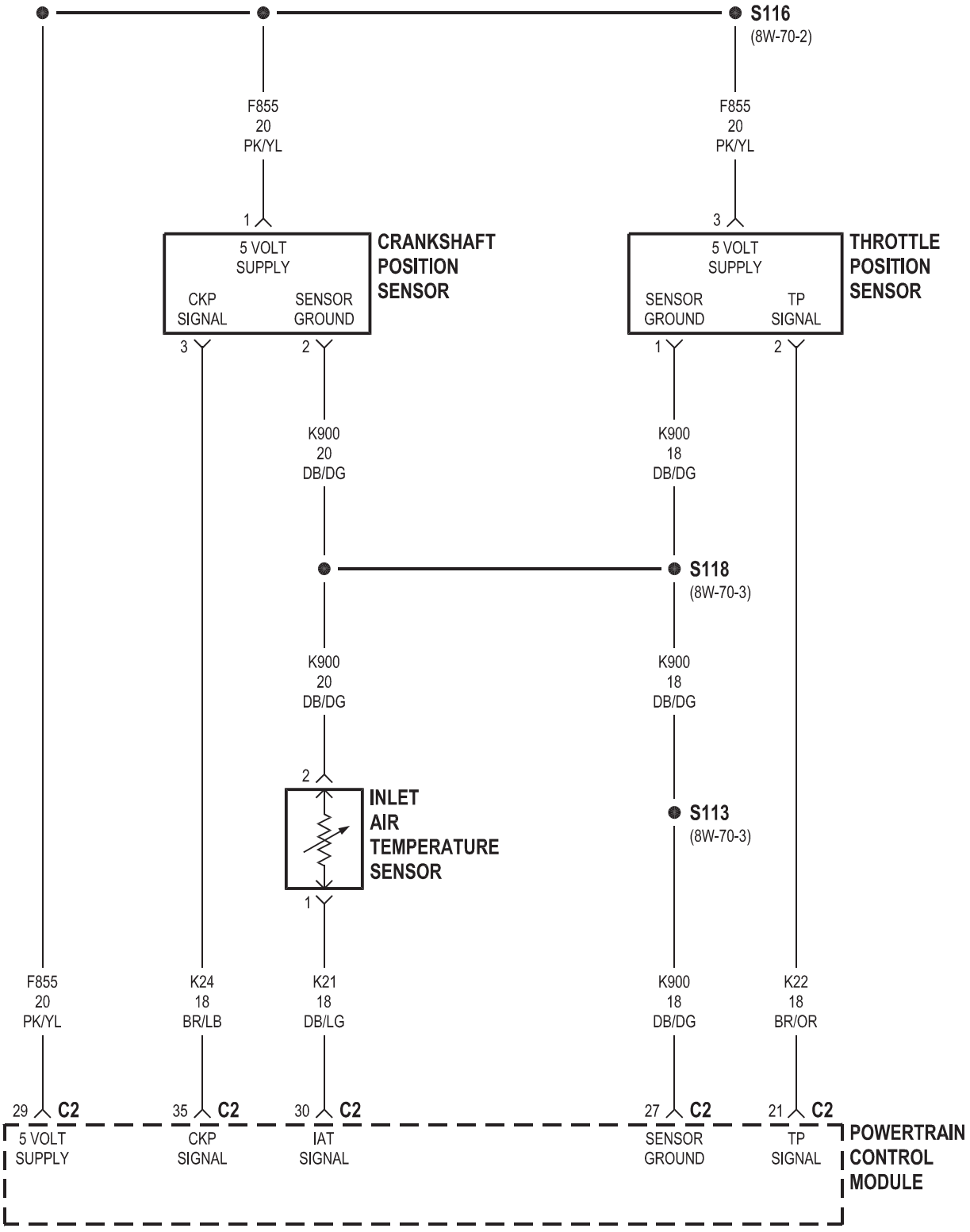
S116
(8W-70-2)
F855
20
PK/YL
F855
20
PK/YL
1
3
5 VOLT
SUPPLY
CKP
SIGNAL
SENSOR
GROUND
CRANKSHAFT
POSITION
SENSOR
5 VOLT
SUPPLY
SENSOR
GROUND
TP
SIGNAL
THROTTLE
POSITION
SENSOR
3
2
1
2
K900
20
DB/DG
K900
18
DB/DG
S118
(8W-70-3)
K900
20
DB/DG
K900
18
DB/DG
2
INLET
AIR
TEMPERATURE
SENSOR
S113
(8W-70-3)
1
F855
20
PK/YL
K24
18
BR/LB
K21
18
DB/LG
K900
18
DB/DG
K22
18
BR/OR
29 C2
35 C2
30 C2
27 C2
21 C2
5 VOLT
SUPPLY
CKP
SIGNAL
IAT
SIGNAL
SENSOR
GROUND
TP
SIGNAL
POWERTRAIN
CONTROL
MODULE

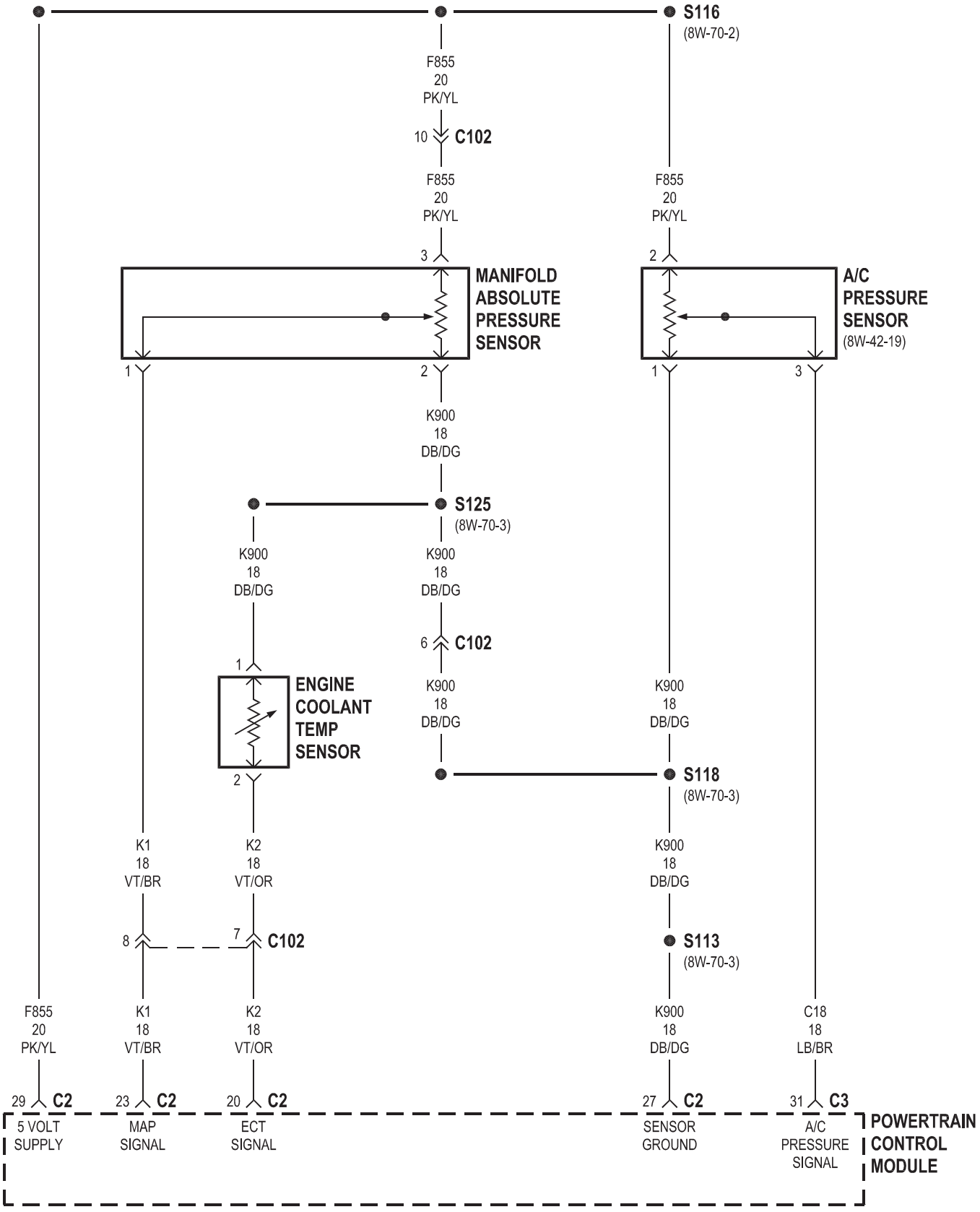
S116
(8W-70-2)
F855
20
PK/YL
10
C102
F855
20
PK/YL
F855
20
PK/YL
3
2
MANIFOLD
ABSOLUTE
PRESSURE
SENSOR
A/C
PRESSURE
SENSOR
(8W-42-19)
1
2
1
3
K900
18
DB/DG
S125
(8W-70-3)
K900
18
DB/DG
K900
18
DB/DG
6
C102
1
ENGINE
COOLANT
TEMP
SENSOR
K900
18
DB/DG
K900
18
DB/DG
2
S118
(8W-70-3)
K1
18
VT/BR
K2
18
VT/OR
K900
18
DB/DG
8
7
C102
S113
(8W-70-3)
F855
20
PK/YL
K1
18
VT/BR
K2
18
VT/OR
K900
18
DB/DG
C18
18
LB/BR
29
C2
23
C2
20
C2
27
C2
31
C3
5 VOLT
SUPPLY
MAP
SIGNAL
ECT
SIGNAL
SENSOR
GROUND
A/C
PRESSURE
SIGNAL
POWERTRAIN
CONTROL
MODULE

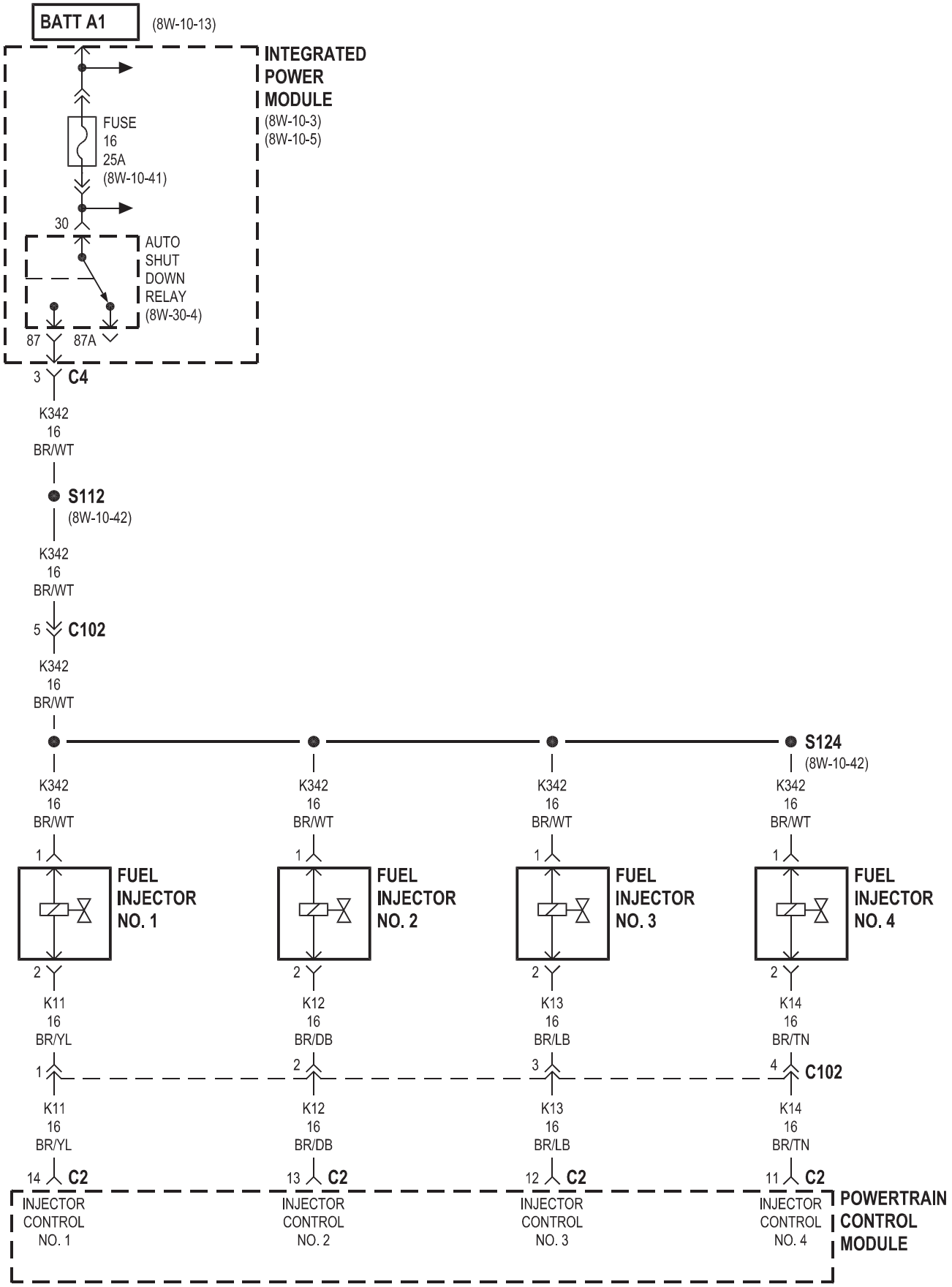
BATT A1
(8W-10-13)
INTEGRATED POWER MODULE
(8W-10-3)
(8W-10-5)
FUSE 16 25A
(8W-10-41)
30
AUTO SHUT DOWN RELAY
(8W-30-4)
87
87A
3
C4
K342 16 BR/WT
S112
(8W-10-42)
K342 16 BR/WT
5
C102
K342 16 BR/WT
S124
(8W-10-42)
FUEL INJECTOR NO. 1
FUEL INJECTOR NO. 2
FUEL INJECTOR NO. 3
FUEL INJECTOR NO. 4
K11 16 BR/YL
K12 16 BR/DB
K13 16 BR/LB
K14 16 BR/TN
C102
14
C2
13
C2
12
C2
11
C2
INJECTOR CONTROL NO. 1
INJECTOR CONTROL NO. 2
INJECTOR CONTROL NO. 3
INJECTOR CONTROL NO. 4
POWERTRAIN CONTROL MODULE

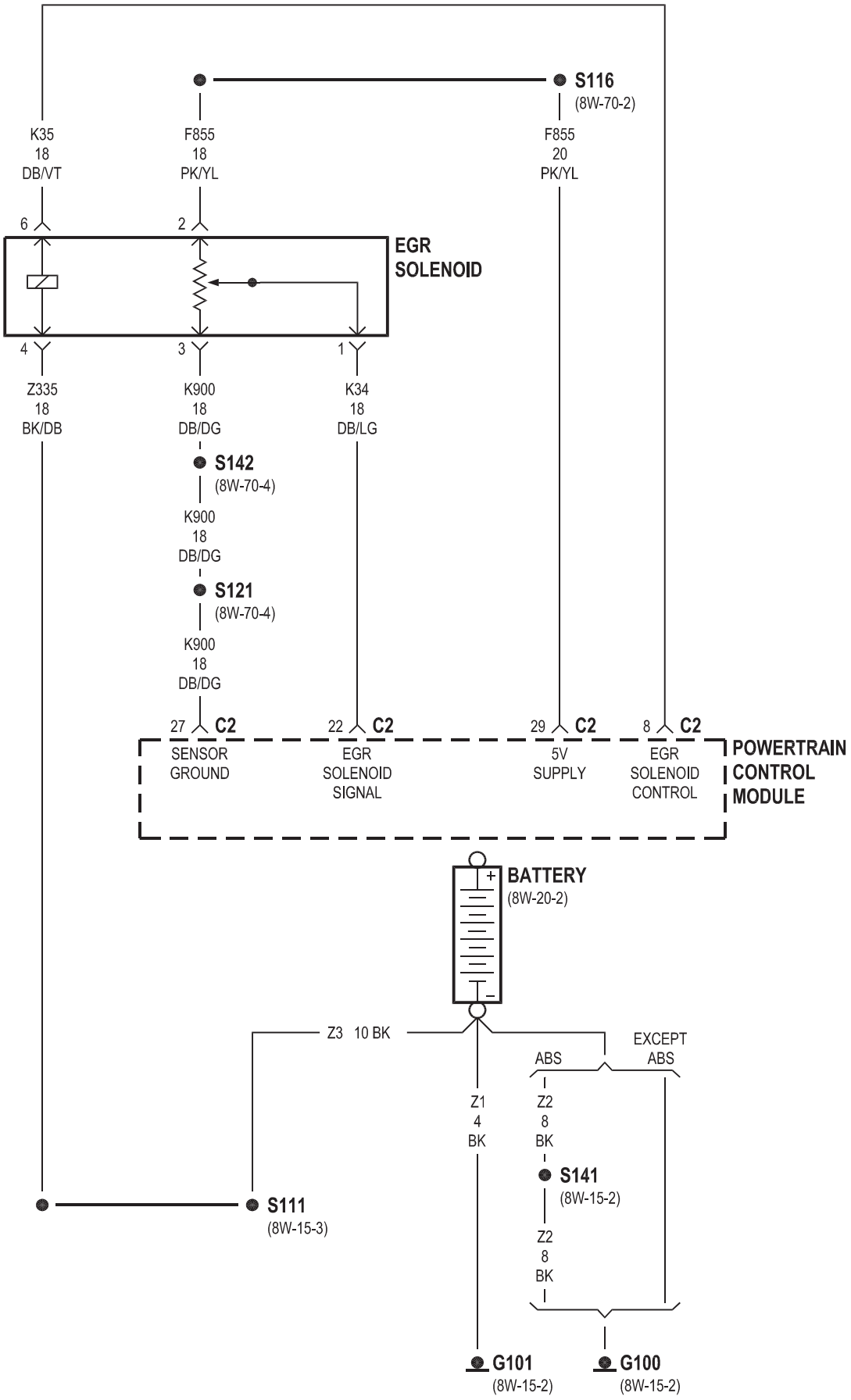
S116
(8W-70-2)
K35
18
DB/VT
F855
18
PK/YL
F855
20
PK/YL
6
2
EGR
SOLENOID
4
3
1
Z335
18
BK/DB
K900
18
DB/DG
K34
18
DB/LG
S142
(8W-70-4)
K900
18
DB/DG
S121
(8W-70-4)
K900
18
DB/DG
27 C2
SENSOR
GROUND
22 C2
EGR
SOLENOID
SIGNAL
29 C2
5V
SUPPLY
8 C2
EGR
SOLENOID
CONTROL
POWERTRAIN
CONTROL
MODULE
BATTERY
(8W-20-2)
Z3 10 BK
EXCEPT
ABS
ABS
Z1
4
BK
Z2
8
BK
S141
(8W-15-2)
Z2
8
BK
S111
(8W-15-3)
G101
(8W-15-2)
G100
(8W-15-2)

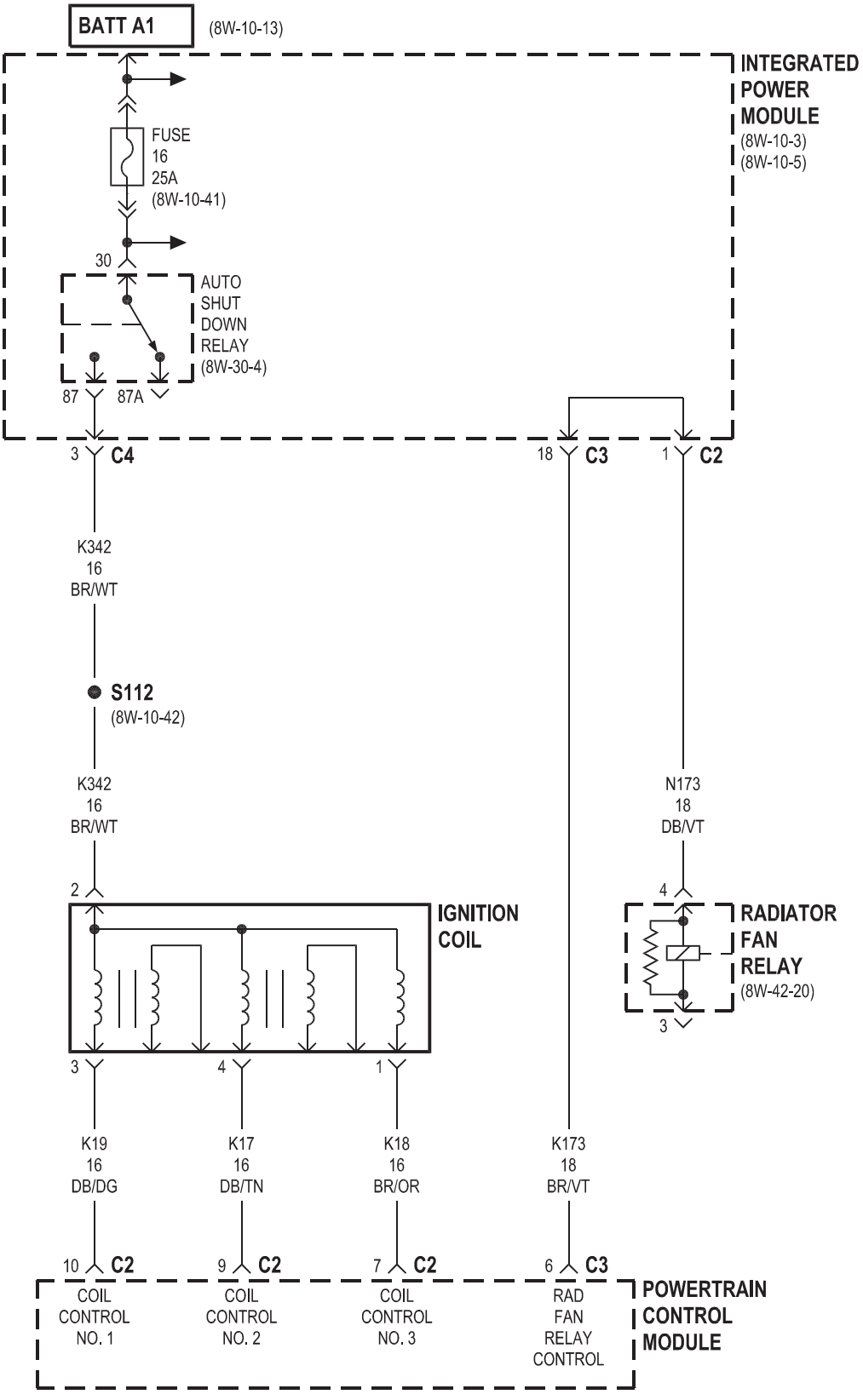
BATT A1
(8W-10-13)
INTEGRATED POWER MODULE
(8W-10-3)
(8W-10-5)
FUSE 16 25A
(8W-10-41)
30
AUTO SHUT DOWN RELAY
(8W-30-4)
87
87A
3 C4
18 C3
1 C2
K342 16 BR/WT
S112
(8W-10-42)
K342 16 BR/WT
N173 18 DB/VT
2
4
IGNITION COIL
RADIATOR FAN RELAY
(8W-42-20)
3
4
1
3
K19 16 DB/DG
K17 16 DB/TN
K18 16 BR/OR
K173 18 BR/VT
10 C2
9 C2
7 C2
6 C3
COIL CONTROL NO. 1
COIL CONTROL NO. 2
COIL CONTROL NO. 3
RAD FAN RELAY CONTROL
POWERTRAIN CONTROL MODULE

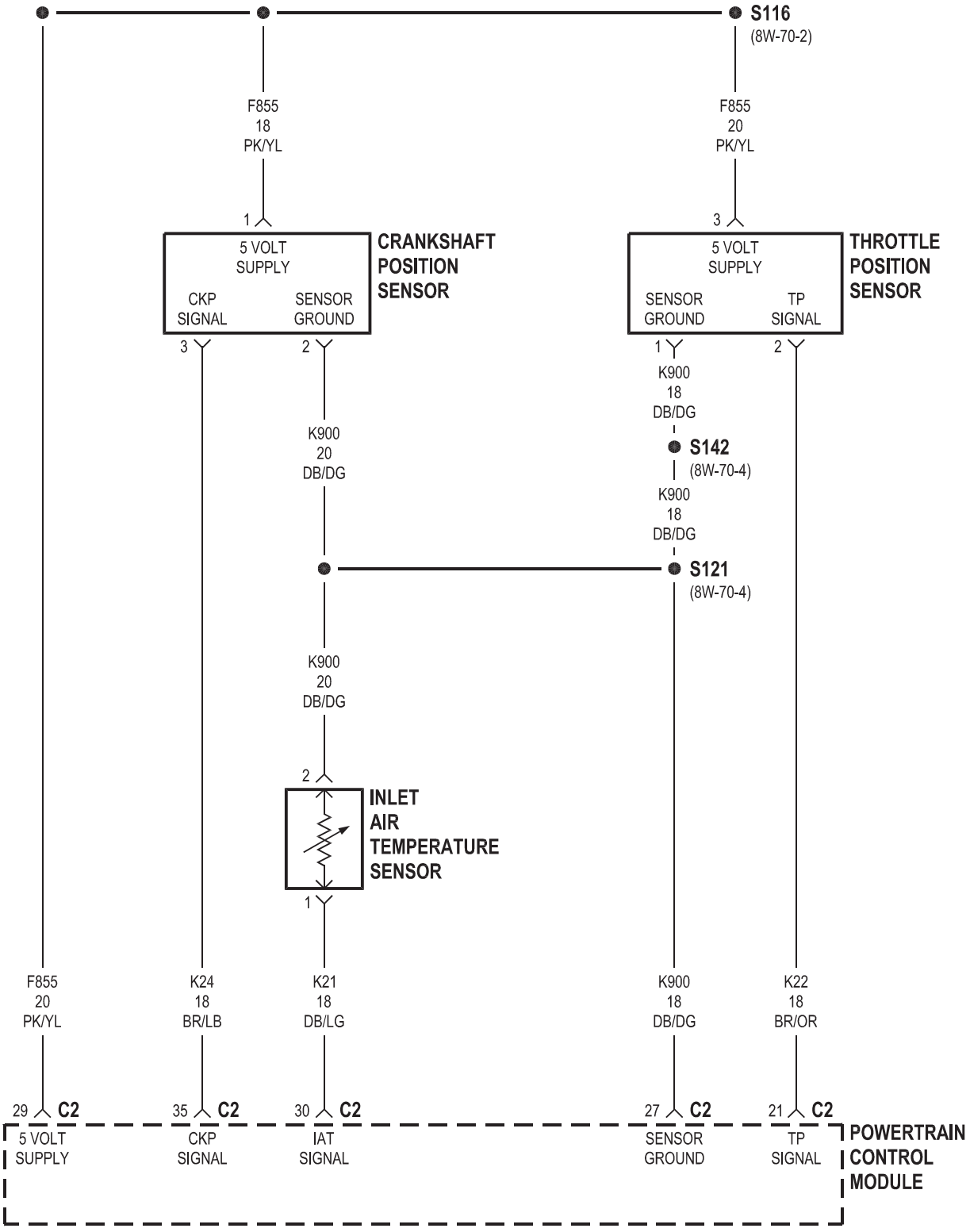
S116
(8W-70-2)
F855
18
PK/YL
F855
20
PK/YL
1
3
5 VOLT
SUPPLY
CKP
SIGNAL
SENSOR
GROUND
CRANKSHAFT
POSITION
SENSOR
5 VOLT
SUPPLY
SENSOR
GROUND
TP
SIGNAL
THROTTLE
POSITION
SENSOR
3
2
1
2
K900
18
DB/DG
S142
(8W-70-4)
K900
20
DB/DG
K900
18
DB/DG
S121
(8W-70-4)
K900
20
DB/DG
2
INLET
AIR
TEMPERATURE
SENSOR
1
F855
20
PK/YL
K24
18
BR/LB
K21
18
DB/LG
K900
18
DB/DG
K22
18
BR/OR
29 C2
35 C2
30 C2
27 C2
21 C2
5 VOLT
SUPPLY
CKP
SIGNAL
IAT
SIGNAL
SENSOR
GROUND
TP
SIGNAL
POWERTRAIN
CONTROL
MODULE

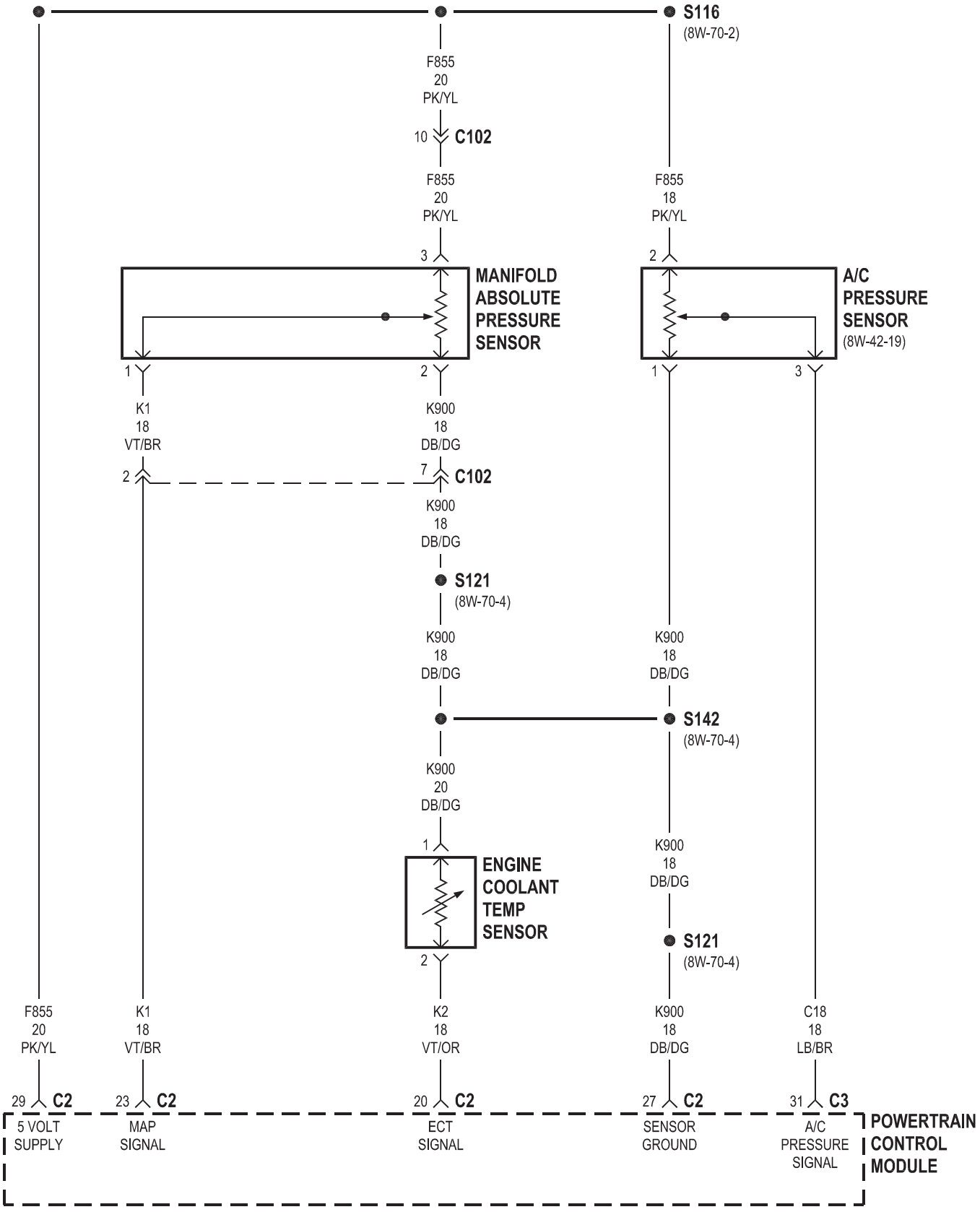
S116
(8W-70-2)
F855
20
PK/YL
10
C102
F855
20
PK/YL
F855
18
PK/YL
3
2
MANIFOLD
ABSOLUTE
PRESSURE
SENSOR
A/C
PRESSURE
SENSOR
(8W-42-19)
1
2
1
3
K1
18
VT/BR
K900
18
DB/DG
2
7
C102
K900
18
DB/DG
S121
(8W-70-4)
K900
18
DB/DG
K900
18
DB/DG
S142
(8W-70-4)
K900
20
DB/DG
1
ENGINE
COOLANT
TEMP
SENSOR
K900
18
DB/DG
2
S121
(8W-70-4)
F855
20
PK/YL
K1
18
VT/BR
K2
18
VT/OR
K900
18
DB/DG
C18
18
LB/BR
29
C2
23
C2
20
C2
27
C2
31
C3
5 VOLT
SUPPLY
MAP
SIGNAL
ECT
SIGNAL
SENSOR
GROUND
A/C
PRESSURE
SIGNAL
POWERTRAIN
CONTROL
MODULE

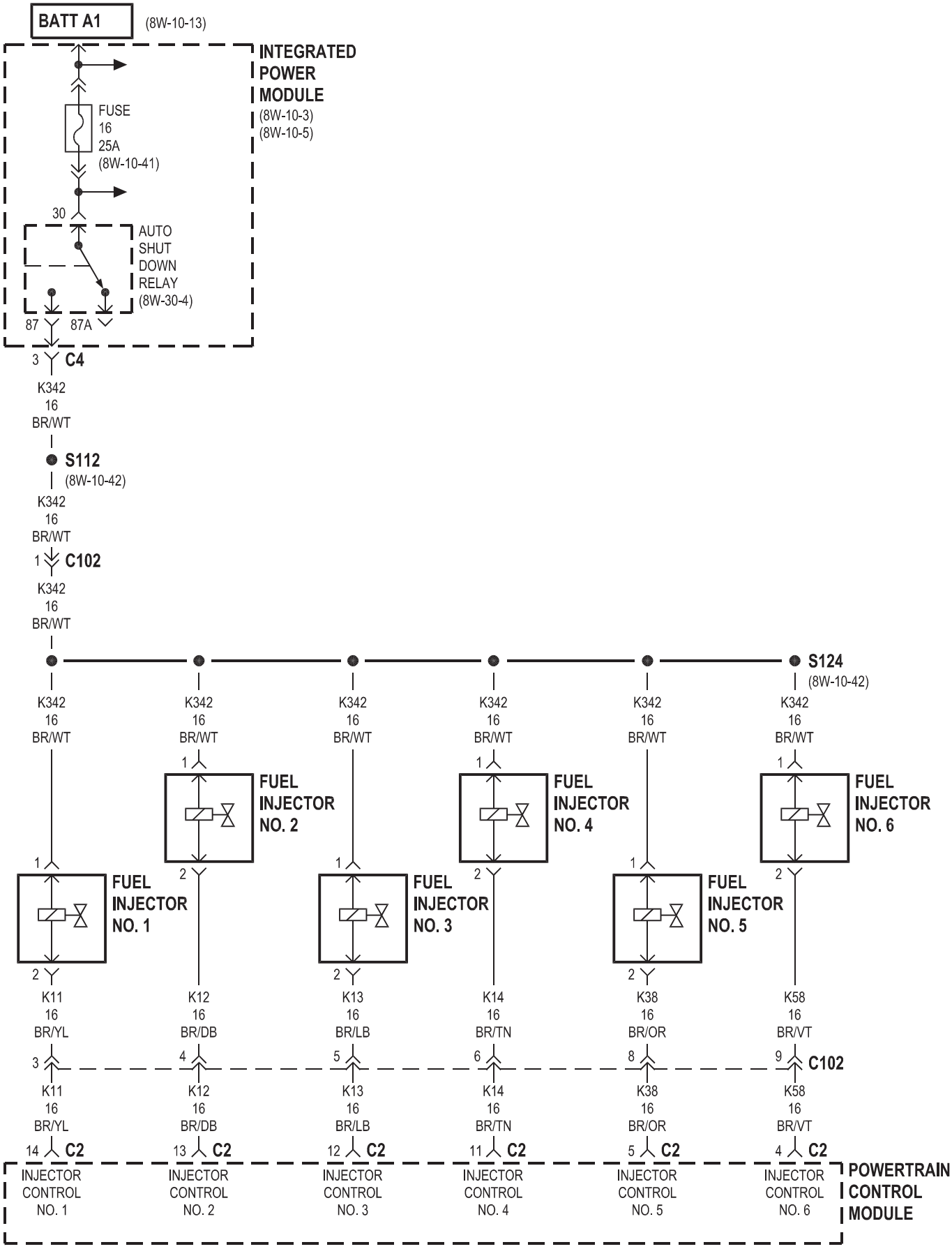
BATT A1
(8W-10-13)
INTEGRATED POWER MODULE
(8W-10-3)
(8W-10-5)
FUSE 16 25A
(8W-10-41)
30
AUTO SHUT DOWN RELAY
(8W-30-4)
87
87A
3
C4
K342 16 BR/WT
S112
(8W-10-42)
K342 16 BR/WT
1
C102
K342 16 BR/WT
S124
(8W-10-42)
FUEL INJECTOR NO. 1
FUEL INJECTOR NO. 2
FUEL INJECTOR NO. 3
FUEL INJECTOR NO. 4
FUEL INJECTOR NO. 5
FUEL INJECTOR NO. 6
K11 16 BR/YL
K12 16 BR/DB
K13 16 BR/LB
K14 16 BR/TN
K38 16 BR/OR
K58 16 BR/VT
3
4
5
6
8
9
C102
14
13
12
11
5
4
C2
INJECTOR CONTROL NO. 1
INJECTOR CONTROL NO. 2
INJECTOR CONTROL NO. 3
INJECTOR CONTROL NO. 4
INJECTOR CONTROL NO. 5
INJECTOR CONTROL NO. 6
POWERTRAIN CONTROL MODULE

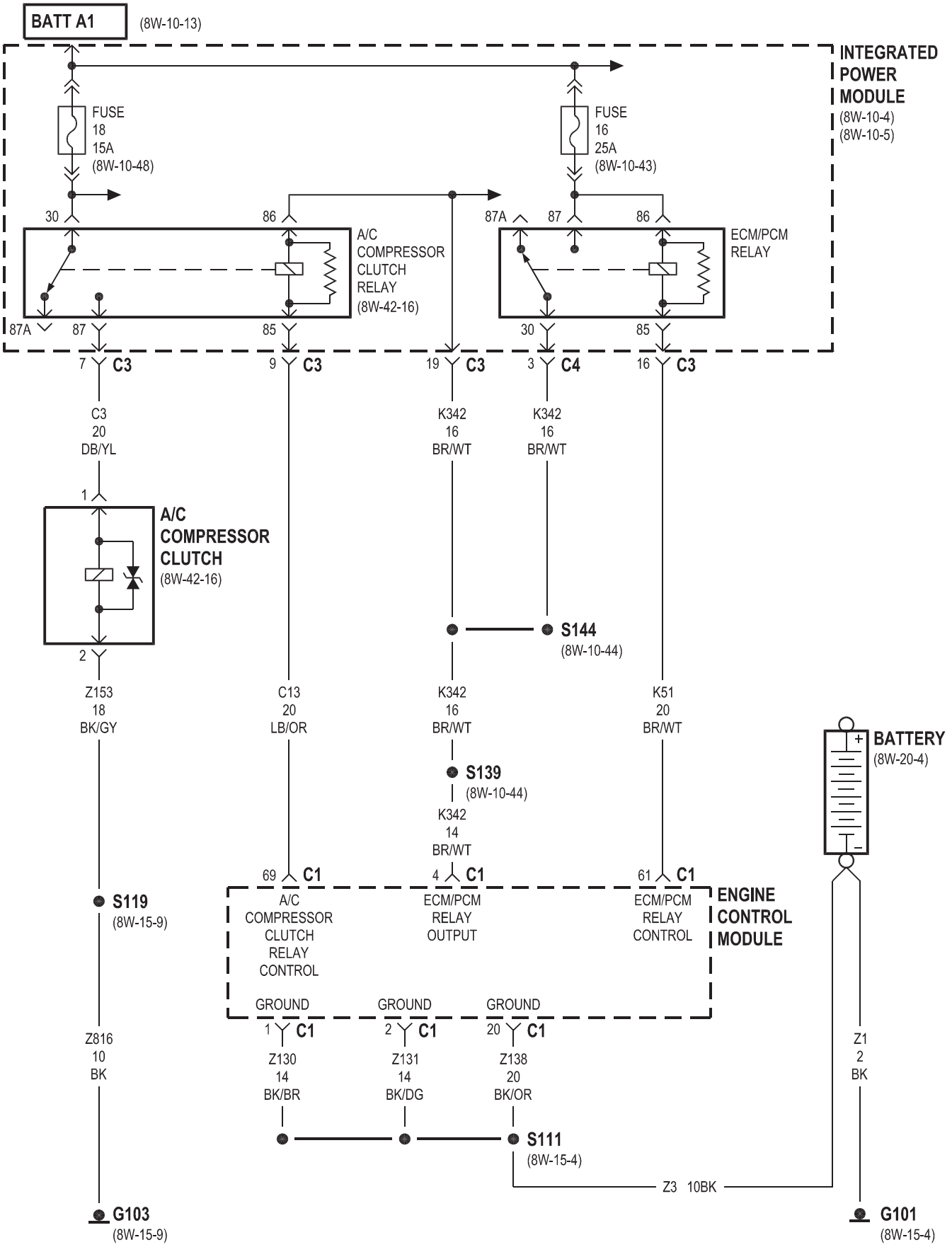
BATT A1
(8W-10-13)
INTEGRATED POWER MODULE
(8W-10-4)
(8W-10-5)
FUSE 18 15A (8W-10-48)
FUSE 16 25A (8W-10-43)
30
86
87A
87
86
A/C COMPRESSOR CLUTCH RELAY (8W-42-16)
ECM/PCM RELAY
87A
87
85
30
85
7 C3
9 C3
19 C3
3 C4
16 C3
C3 20 DB/YL
K342 16 BR/WT
K342 16 BR/WT
1
A/C COMPRESSOR CLUTCH (8W-42-16)
2
S144 (8W-10-44)
Z153 18 BK/GY
C13 20 LB/OR
K342 16 BR/WT
K51 20 BR/WT
S139 (8W-10-44)
K342 14 BR/WT
BATTERY (8W-20-4)
69 C1
4 C1
61 C1
ENGINE CONTROL MODULE
A/C COMPRESSOR CLUTCH RELAY CONTROL
ECM/PCM RELAY OUTPUT
ECM/PCM RELAY CONTROL
S119 (8W-15-9)
GROUND
GROUND
GROUND
1 C1
2 C1
20 C1
Z816 10 BK
Z130 14 BK/BR
Z131 14 BK/DG
Z138 20 BK/OR
Z1 2 BK
S111 (8W-15-4)
Z3 10BK
G103 (8W-15-9)
G101 (8W-15-4)

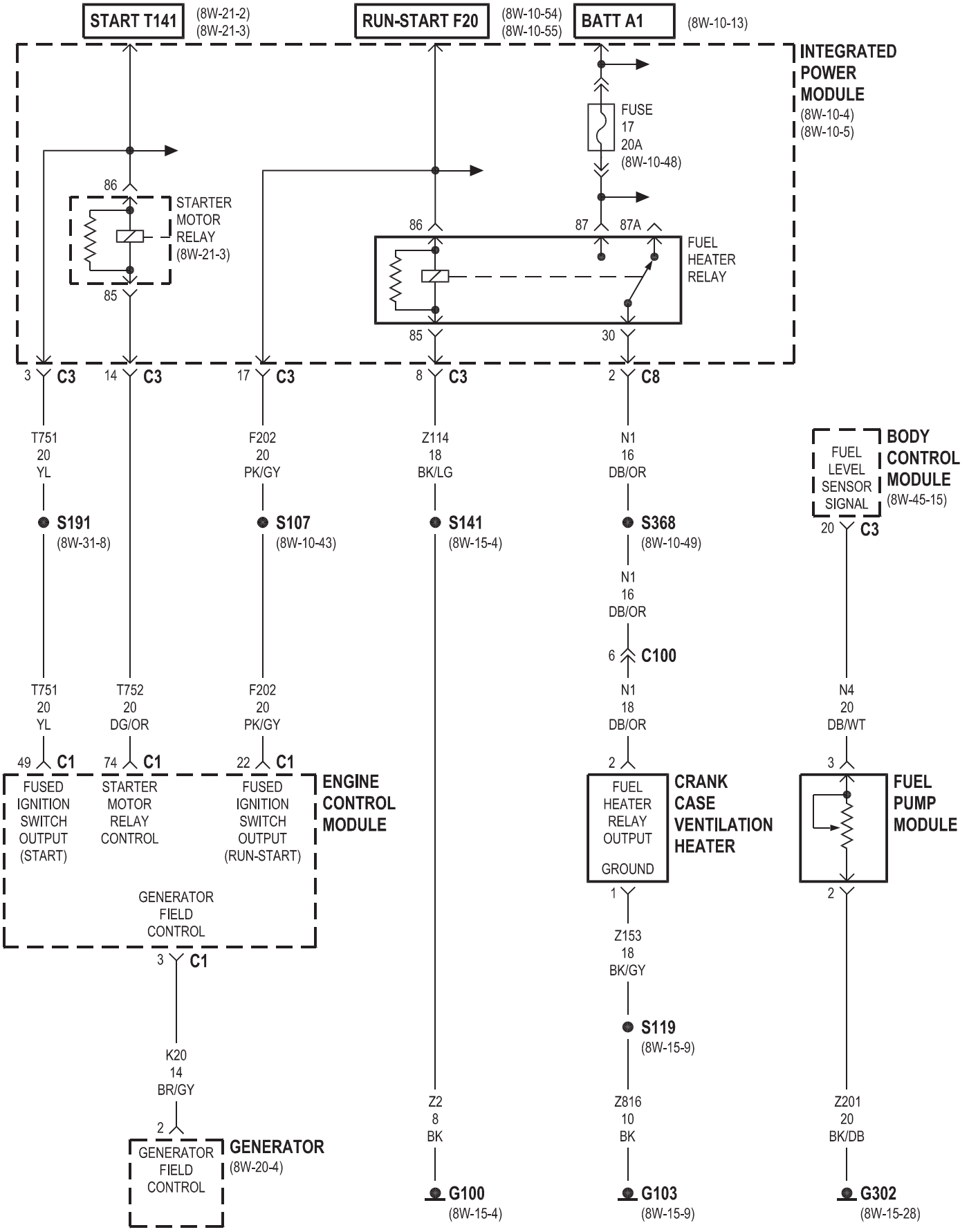
START T141
(8W-21-2)
(8W-21-3)
RUN-START F20
(8W-10-54)
(8W-10-55)
BATT A1
(8W-10-13)
INTEGRATED POWER MODULE
(8W-10-4)
(8W-10-5)
FUSE 17 20A
(8W-10-48)
86
STARTER MOTOR RELAY
(8W-21-3)
85
86
87
87A
FUEL HEATER RELAY
85
30
3 C3
14 C3
17 C3
8 C3
2 C8
T751 20 YL
F202 20 PK/GY
Z114 18 BK/LG
N1 16 DB/OR
FUEL LEVEL SENSOR SIGNAL
BODY CONTROL MODULE
(8W-45-15)
20 C3
S191
(8W-31-8)
S107
(8W-10-43)
S141
(8W-15-4)
S368
(8W-10-49)
N1 16 DB/OR
6 C100
N1 18 DB/OR
N4 20 DB/WT
T751 20 YL
T752 20 DG/OR
F202 20 PK/GY
49 C1
74 C1
22 C1
FUSED IGNITION SWITCH OUTPUT (START)
STARTER MOTOR RELAY CONTROL
FUSED IGNITION SWITCH OUTPUT (RUN-START)
ENGINE CONTROL MODULE
2
3
FUEL HEATER RELAY OUTPUT
GROUND
CRANK CASE VENTILATION HEATER
FUEL PUMP MODULE
GENERATOR FIELD CONTROL
3 C1
1
2
Z153 18 BK/GY
S119
(8W-15-9)
K20 14 BR/GY
Z2 8 BK
Z816 10 BK
Z201 20 BK/DB
2
GENERATOR FIELD CONTROL
GENERATOR
(8W-20-4)
G100
(8W-15-4)
G103
(8W-15-9)
G302
(8W-15-28)

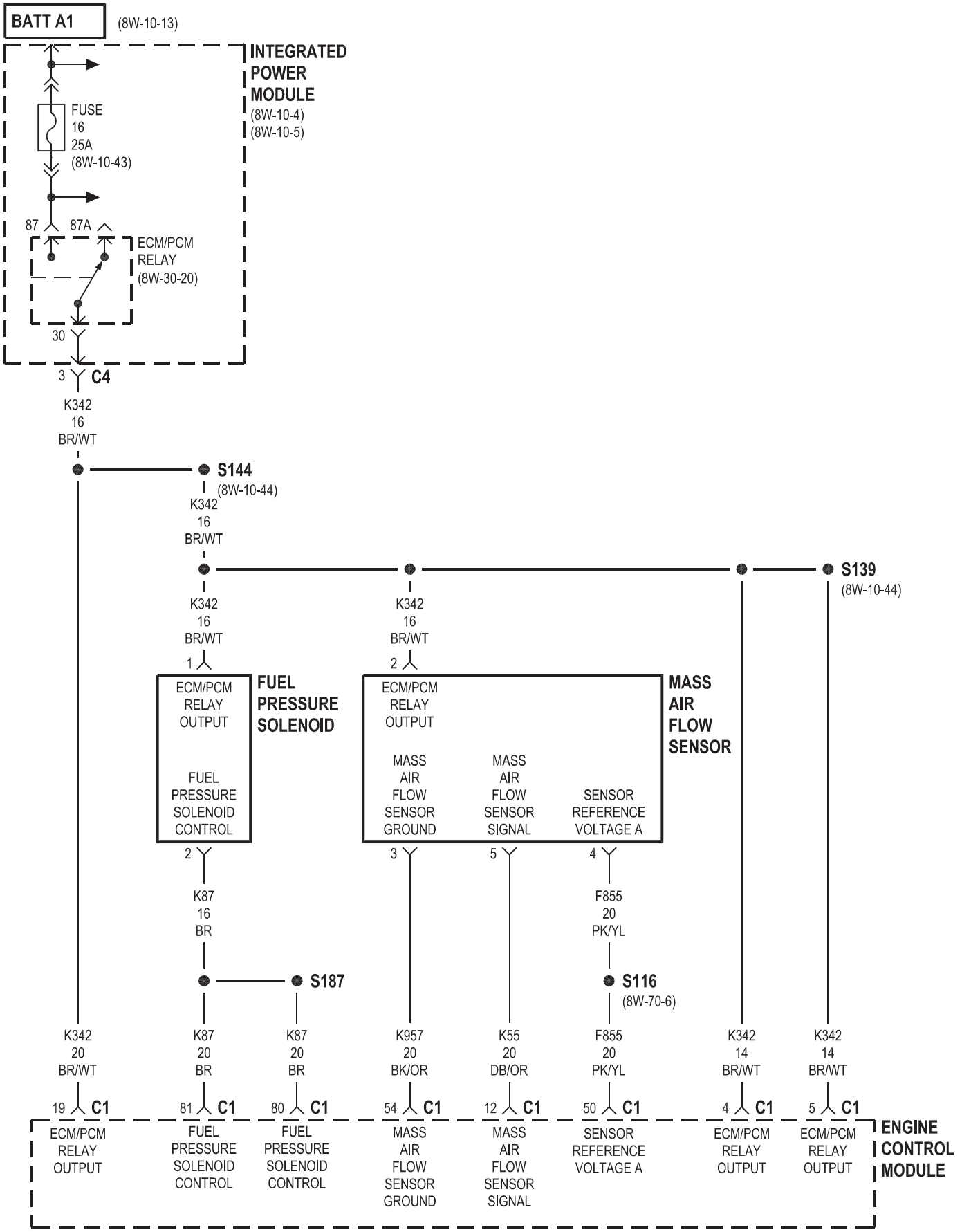
BATT A1
(8W-10-13)
INTEGRATED POWER MODULE
(8W-10-4)
(8W-10-5)
FUSE 16 25A (8W-10-43)
87
87A
ECM/PCM RELAY (8W-30-20)
30
3
C4
K342 16 BR/WT
S144
(8W-10-44)
K342 16 BR/WT
S139
(8W-10-44)
K342 16 BR/WT
1
K342 16 BR/WT
2
ECM/PCM RELAY OUTPUT
FUEL PRESSURE SOLENOID CONTROL
FUEL PRESSURE SOLENOID
ECM/PCM RELAY OUTPUT
MASS AIR FLOW SENSOR GROUND
MASS AIR FLOW SENSOR SIGNAL
SENSOR REFERENCE VOLTAGE A
MASS AIR FLOW SENSOR
2
3
5
4
K87 16 BR
F855 20 PK/YL
S187
S116
(8W-70-6)
K342 20 BR/WT
K87 20 BR
K87 20 BR
K957 20 BK/OR
K55 20 DB/OR
F855 20 PK/YL
K342 14 BR/WT
K342 14 BR/WT
19
C1
81
C1
80
C1
54
C1
12
C1
50
C1
4
C1
5
C1
ECM/PCM RELAY OUTPUT
FUEL PRESSURE SOLENOID CONTROL
FUEL PRESSURE SOLENOID CONTROL
MASS AIR FLOW SENSOR GROUND
MASS AIR FLOW SENSOR SIGNAL
SENSOR REFERENCE VOLTAGE A
ECM/PCM RELAY OUTPUT
ECM/PCM RELAY OUTPUT
ENGINE CONTROL MODULE

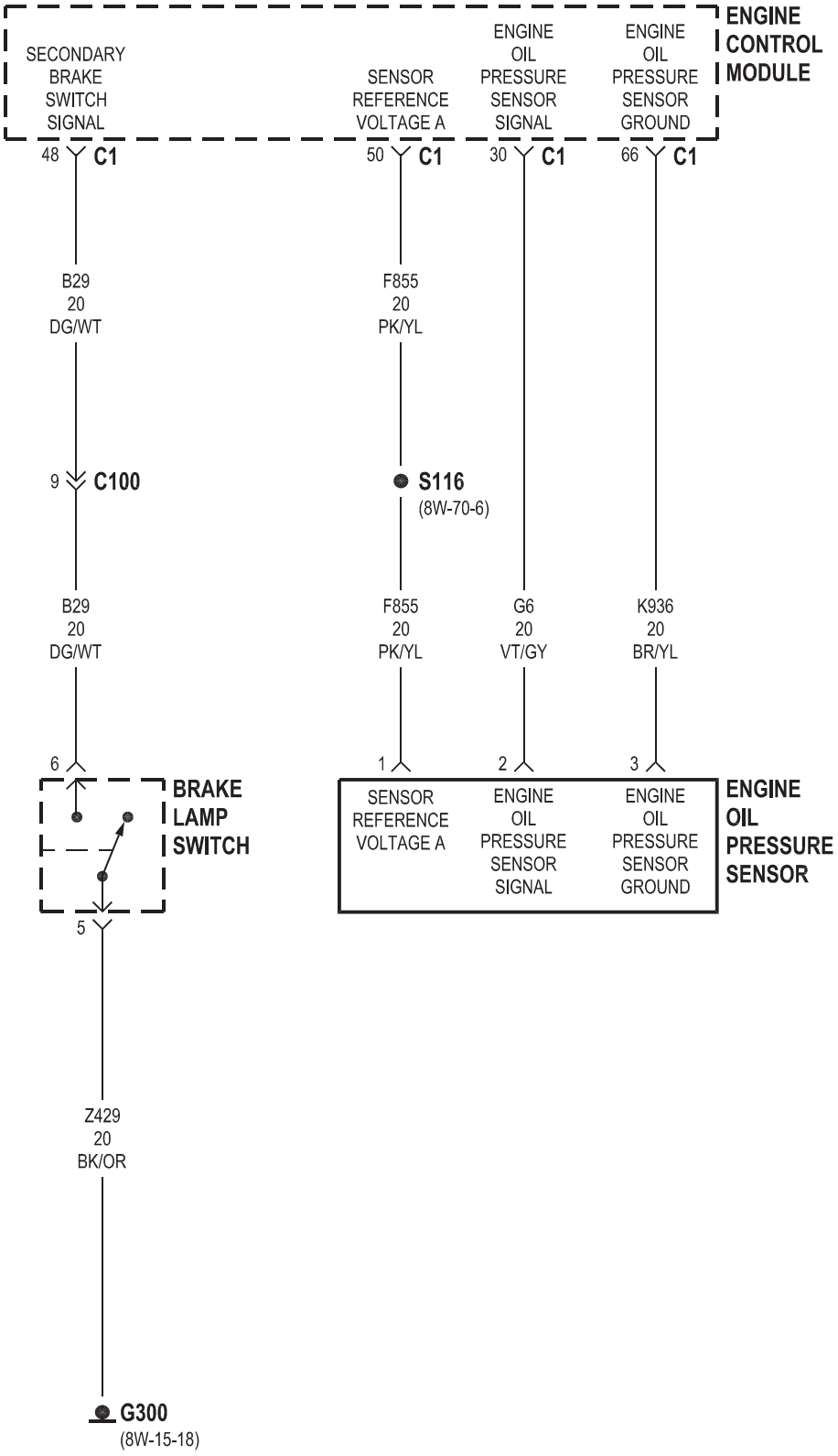
ENGINE CONTROL MODULE
SECONDARY BRAKE SWITCH SIGNAL
SENSOR REFERENCE VOLTAGE A
ENGINE OIL PRESSURE SENSOR SIGNAL
ENGINE OIL PRESSURE SENSOR GROUND
48 C1
50 C1
30 C1
66 C1
B29 20 DG/WT
F855 20 PK/YL
9 C100
S116
(8W-70-6)
B29 20 DG/WT
F855 20 PK/YL
G6 20 VT/GY
K936 20 BR/YL
6
1
2
3
BRAKE LAMP SWITCH
SENSOR REFERENCE VOLTAGE A
ENGINE OIL PRESSURE SENSOR SIGNAL
ENGINE OIL PRESSURE SENSOR GROUND
ENGINE OIL PRESSURE SENSOR
5
Z429 20 BK/OR
G300
(8W-15-18)

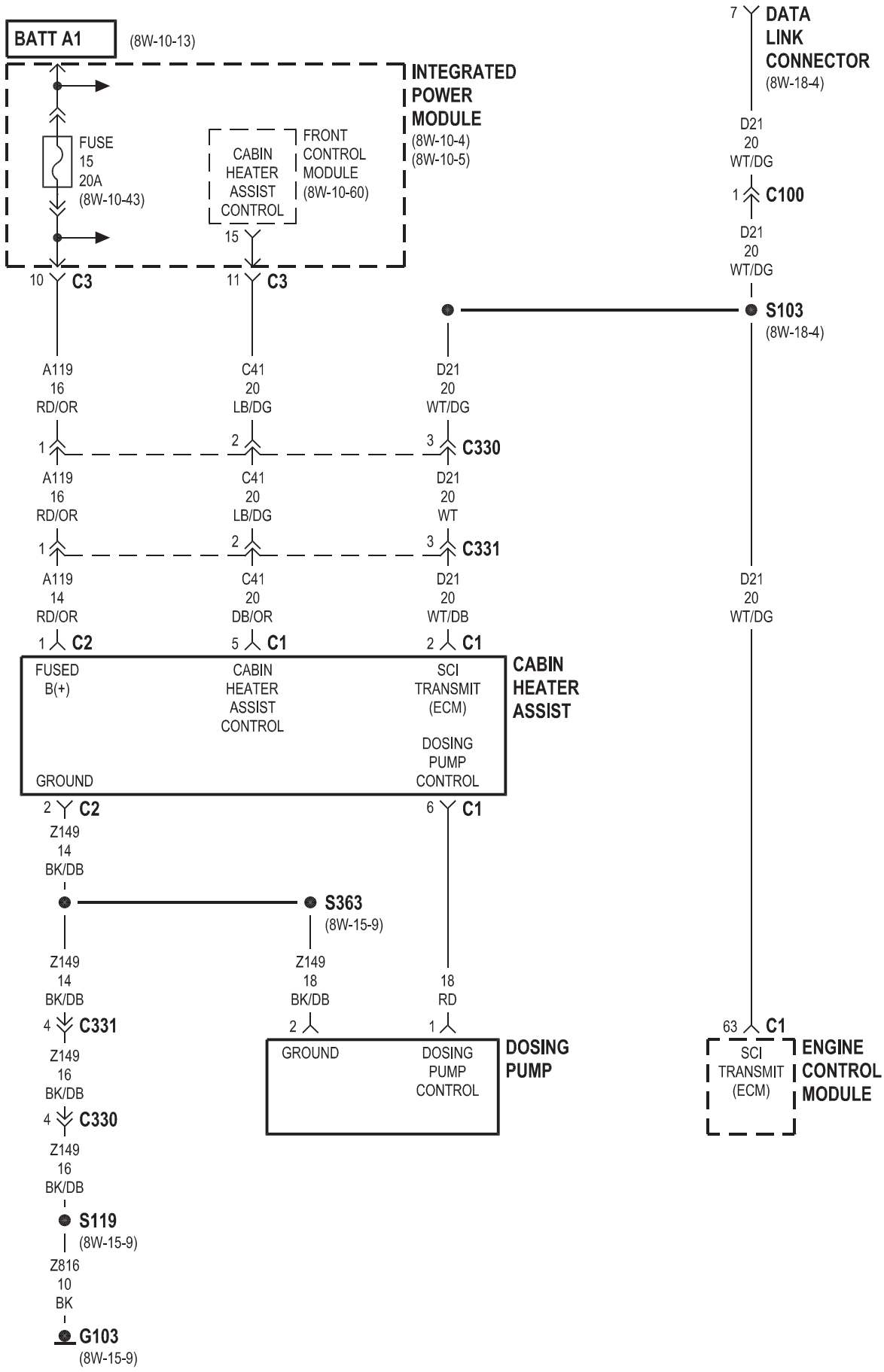
BATT A1
(8W-10-13)
INTEGRATED POWER MODULE
(8W-10-4)
(8W-10-5)
FUSE 15 20A
(8W-10-43)
CABIN HEATER ASSIST CONTROL
FRONT CONTROL MODULE
(8W-10-60)
7 DATA LINK CONNECTOR
(8W-18-4)
D21 20 WT/DG
1 C100
D21 20 WT/DG
S103
(8W-18-4)
10 C3
11 C3
A119 16 RD/OR
C41 20 LB/DG
D21 20 WT/DG
1
2
3 C330
A119 16 RD/OR
C41 20 LB/DG
D21 20 WT
1
2
3 C331
A119 14 RD/OR
C41 20 DB/OR
D21 20 WT/DB
D21 20 WT/DG
1 C2
5 C1
2 C1
FUSED B(+)
CABIN HEATER ASSIST CONTROL
SCI TRANSMIT (ECM)
DOSING PUMP CONTROL
GROUND
CABIN HEATER ASSIST
2 C2
6 C1
Z149 14 BK/DB
S363
(8W-15-9)
Z149 14 BK/DB
Z149 18 BK/DB
18 RD
4 C331
2
1
Z149 16 BK/DB
GROUND
DOSING PUMP CONTROL
DOSING PUMP
63 C1
SCI TRANSMIT (ECM)
ENGINE CONTROL MODULE
4 C330
Z149 16 BK/DB
S119
(8W-15-9)
Z816 10 BK
G103
(8W-15-9)

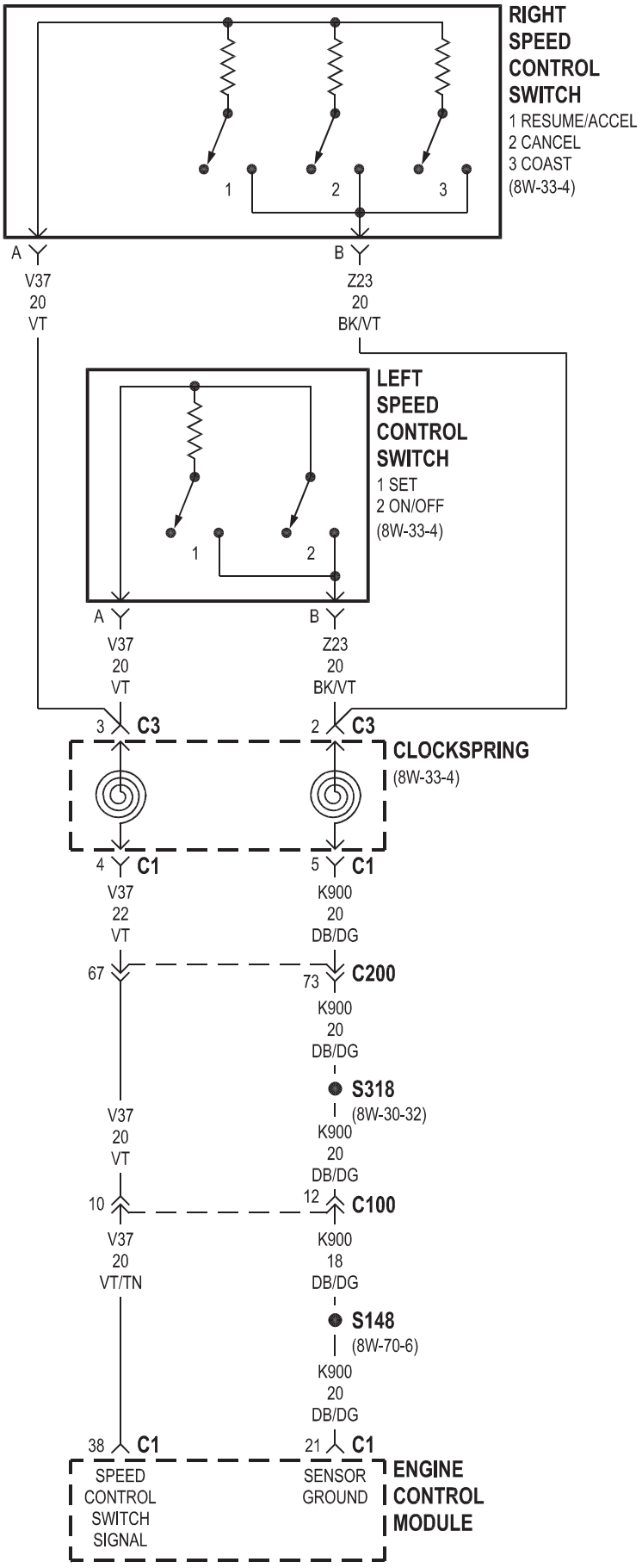
RIGHT
SPEED
CONTROL
SWITCH
1 RESUME/ACCEL
2 CANCEL
3 COAST
(8W-33-4)
1
2
3
A
V37
20
VT
B
Z23
20
BK/VT
LEFT
SPEED
CONTROL
SWITCH
1 SET
2 ON/OFF
(8W-33-4)
1
2
A
V37
20
VT
B
Z23
20
BK/VT
3 C3
2 C3
CLOCKSPRING
(8W-33-4)
4 C1
V37
22
VT
5 C1
K900
20
DB/DG
67
73 C200
K900
20
DB/DG
S318
(8W-30-32)
V37
20
VT
K900
20
DB/DG
10
12 C100
V37
20
VT/TN
K900
18
DB/DG
S148
(8W-70-6)
K900
20
DB/DG
38 C1
21 C1
SPEED
CONTROL
SWITCH
SIGNAL
SENSOR
GROUND
ENGINE
CONTROL
MODULE

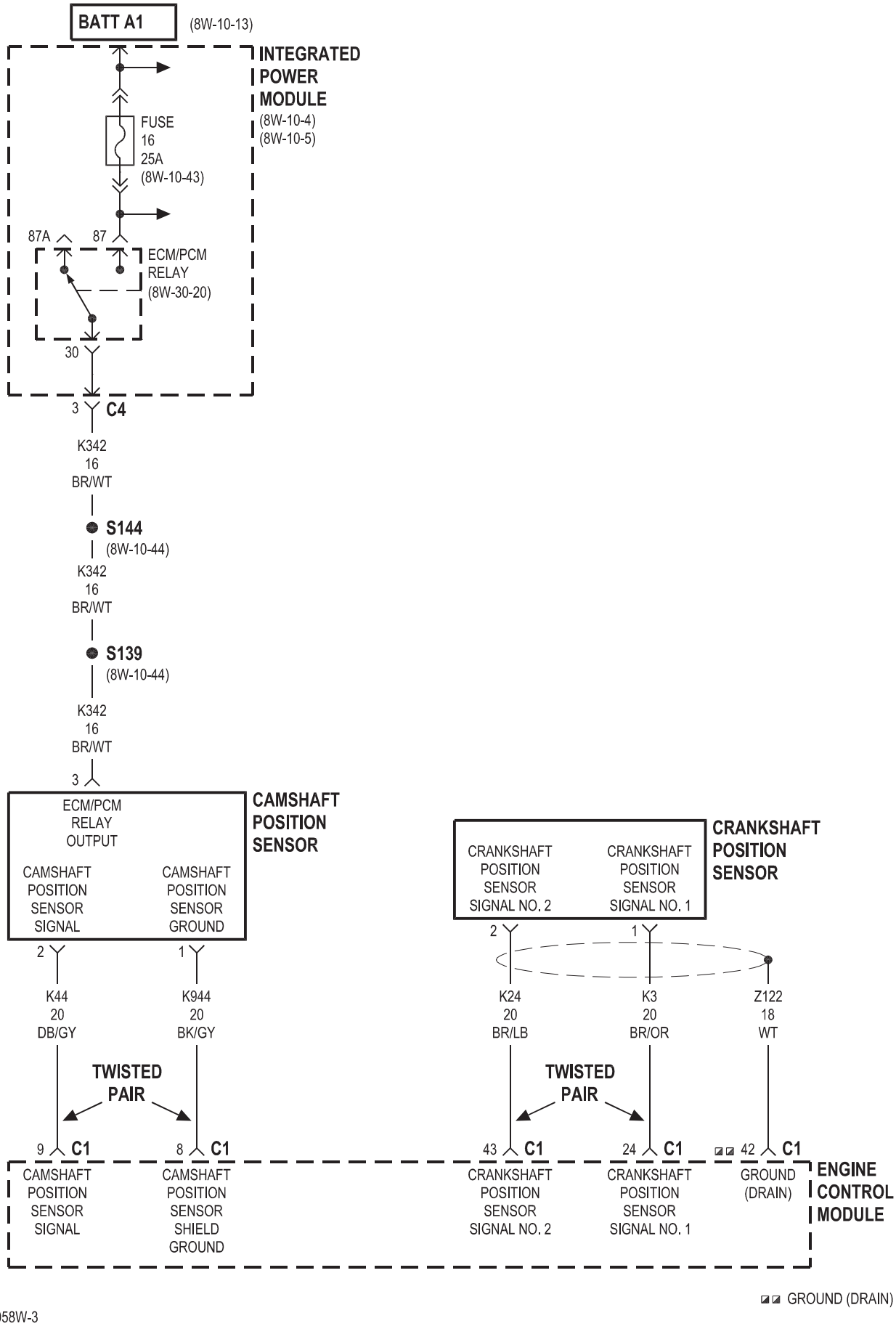
BATT A1
(8W-10-13)
INTEGRATED POWER MODULE
(8W-10-4)
(8W-10-5)
FUSE 16 25A
(8W-10-43)
87A
87
ECM/PCM RELAY
(8W-30-20)
30
3
C4
K342 16 BR/WT
S144
(8W-10-44)
K342 16 BR/WT
S139
(8W-10-44)
K342 16 BR/WT
3
ECM/PCM RELAY OUTPUT
CAMSHAFT POSITION SENSOR
CAMSHAFT POSITION SENSOR SIGNAL
CAMSHAFT POSITION SENSOR GROUND
2
1
K44 20 DB/GY
K944 20 BK/GY
TWISTED PAIR
9 C1
8 C1
CAMSHAFT POSITION SENSOR SIGNAL
CAMSHAFT POSITION SENSOR SHIELD GROUND
CRANKSHAFT POSITION SENSOR
CRANKSHAFT POSITION SENSOR SIGNAL NO. 2
CRANKSHAFT POSITION SENSOR SIGNAL NO. 1
2
1
K24 20 BR/LB
K3 20 BR/OR
Z122 18 WT
TWISTED PAIR
43 C1
24 C1
42 C1
CRANKSHAFT POSITION SENSOR SIGNAL NO. 2
CRANKSHAFT POSITION SENSOR SIGNAL NO. 1
GROUND (DRAIN)
ENGINE CONTROL MODULE
GROUND (DRAIN)

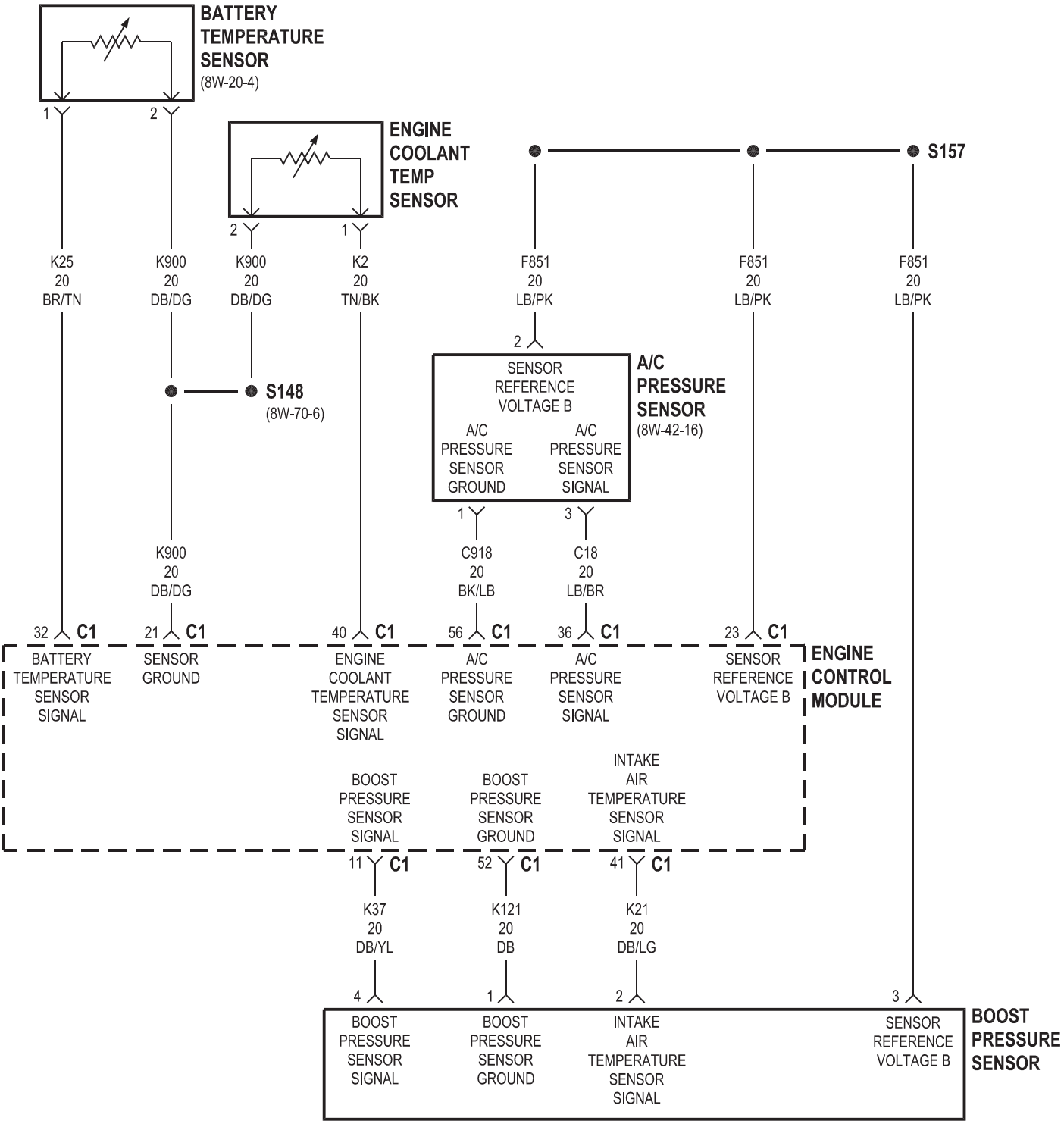
BATTERY TEMPERATURE SENSOR
(8W-20-4)
1
2
ENGINE COOLANT TEMP SENSOR
2
1
S157
K25 20 BR/TN
K900 20 DB/DG
K900 20 DB/DG
K2 20 TN/BK
F851 20 LB/PK
F851 20 LB/PK
F851 20 LB/PK
2
SENSOR REFERENCE VOLTAGE B
A/C PRESSURE SENSOR GROUND
A/C PRESSURE SENSOR SIGNAL
A/C PRESSURE SENSOR
(8W-42-16)
S148
(8W-70-6)
1
3
K900 20 DB/DG
C918 20 BK/LB
C18 20 LB/BR
32 C1
21 C1
40 C1
56 C1
36 C1
23 C1
BATTERY TEMPERATURE SENSOR SIGNAL
SENSOR GROUND
ENGINE COOLANT TEMPERATURE SENSOR SIGNAL
A/C PRESSURE SENSOR GROUND
A/C PRESSURE SENSOR SIGNAL
SENSOR REFERENCE VOLTAGE B
ENGINE CONTROL MODULE
BOOST PRESSURE SENSOR SIGNAL
BOOST PRESSURE SENSOR GROUND
INTAKE AIR TEMPERATURE SENSOR SIGNAL
11 C1
52 C1
41 C1
K37 20 DB/YL
K121 20 DB
K21 20 DB/LG
4
1
2
3
BOOST PRESSURE SENSOR SIGNAL
BOOST PRESSURE SENSOR GROUND
INTAKE AIR TEMPERATURE SENSOR SIGNAL
SENSOR REFERENCE VOLTAGE B
BOOST PRESSURE SENSOR

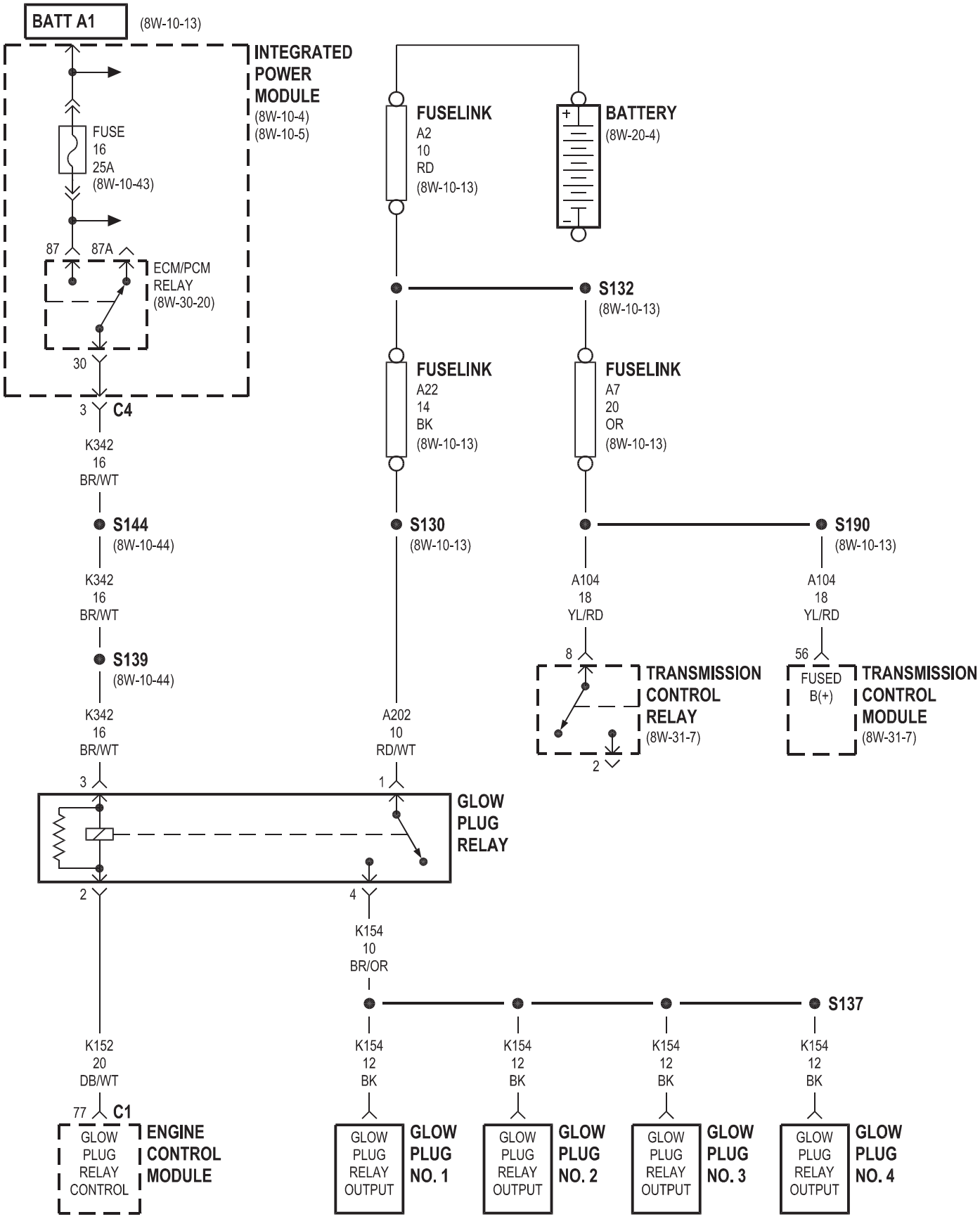
BATT A1
(8W-10-13)
INTEGRATED POWER MODULE
(8W-10-4)
(8W-10-5)
FUSE 16 25A (8W-10-43)
87
87A
ECM/PCM RELAY (8W-30-20)
30
3
C4
K342 16 BR/WT
S144
(8W-10-44)
K342 16 BR/WT
S139
(8W-10-44)
K342 16 BR/WT
3
2
K152 20 DB/WT
77
C1
GLOW PLUG RELAY CONTROL
ENGINE CONTROL MODULE
FUSELINK A2 10 RD (8W-10-13)
BATTERY
(8W-20-4)
S132
(8W-10-13)
FUSELINK A22 14 BK (8W-10-13)
FUSELINK A7 20 OR (8W-10-13)
S130
(8W-10-13)
S190
(8W-10-13)
A104 18 YL/RD
8
TRANSMISSION CONTROL RELAY
(8W-31-7)
2
A104 18 YL/RD
56
FUSED B(+)
TRANSMISSION CONTROL MODULE
(8W-31-7)
A202 10 RD/WT
1
GLOW PLUG RELAY
4
K154 10 BR/OR
S137
K154 12 BK
GLOW PLUG RELAY OUTPUT
GLOW PLUG NO. 1
K154 12 BK
GLOW PLUG RELAY OUTPUT
GLOW PLUG NO. 2
K154 12 BK
GLOW PLUG RELAY OUTPUT
GLOW PLUG NO. 3
K154 12 BK
GLOW PLUG RELAY OUTPUT
GLOW PLUG NO. 4

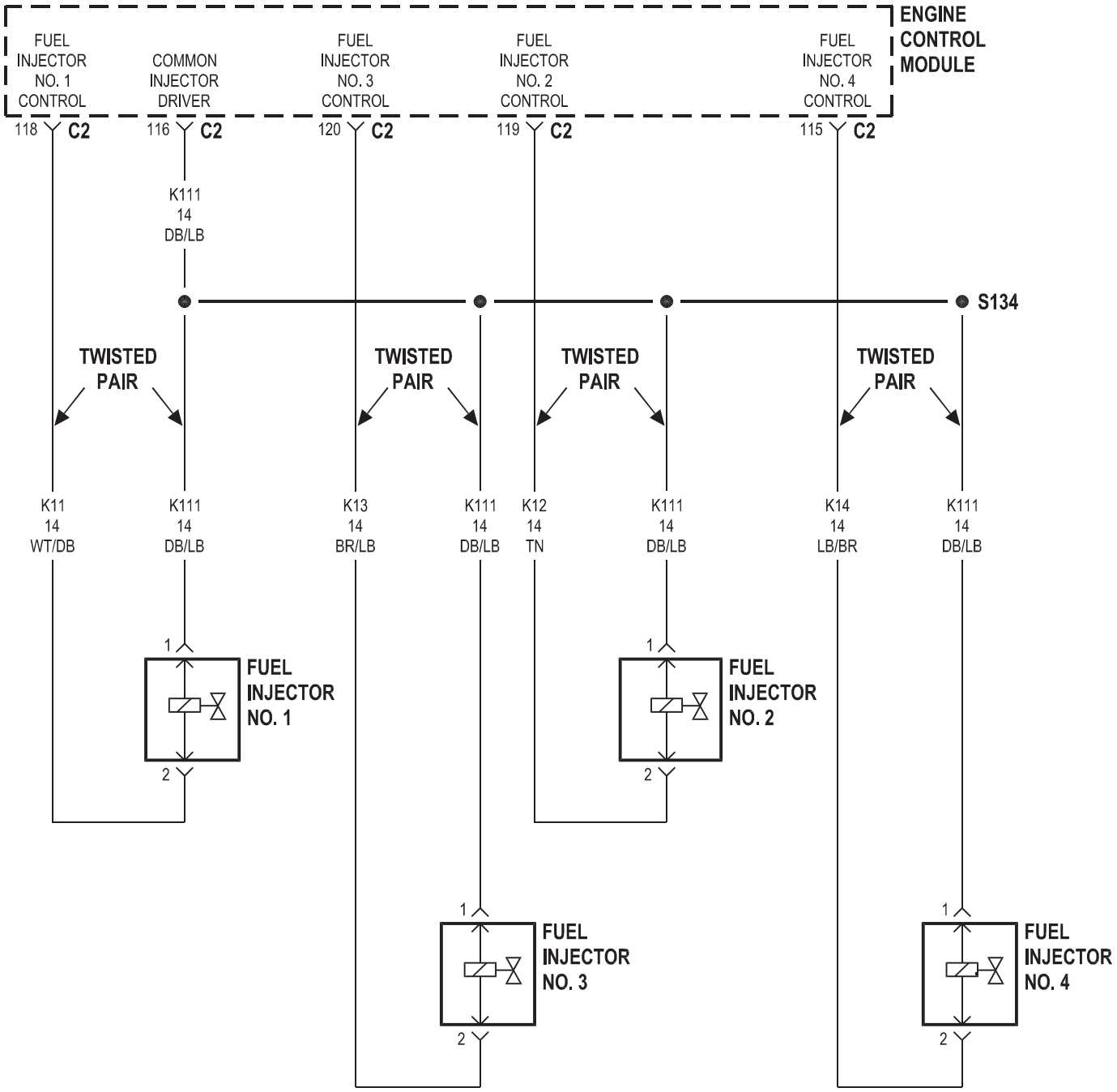
ENGINE CONTROL MODULE
FUEL INJECTOR NO. 1 CONTROL
COMMON INJECTOR DRIVER
FUEL INJECTOR NO. 3 CONTROL
FUEL INJECTOR NO. 2 CONTROL
FUEL INJECTOR NO. 4 CONTROL
118 C2
116 C2
120 C2
119 C2
115 C2
K111 14 DB/LB
S134
TWISTED PAIR
TWISTED PAIR
TWISTED PAIR
TWISTED PAIR
K11 14 WT/DB
K111 14 DB/LB
K13 14 BR/LB
K111 14 DB/LB
K12 14 TN
K111 14 DB/LB
K14 14 LB/BR
K111 14 DB/LB
FUEL INJECTOR NO. 1
FUEL INJECTOR NO. 2
FUEL INJECTOR NO. 3
FUEL INJECTOR NO. 4

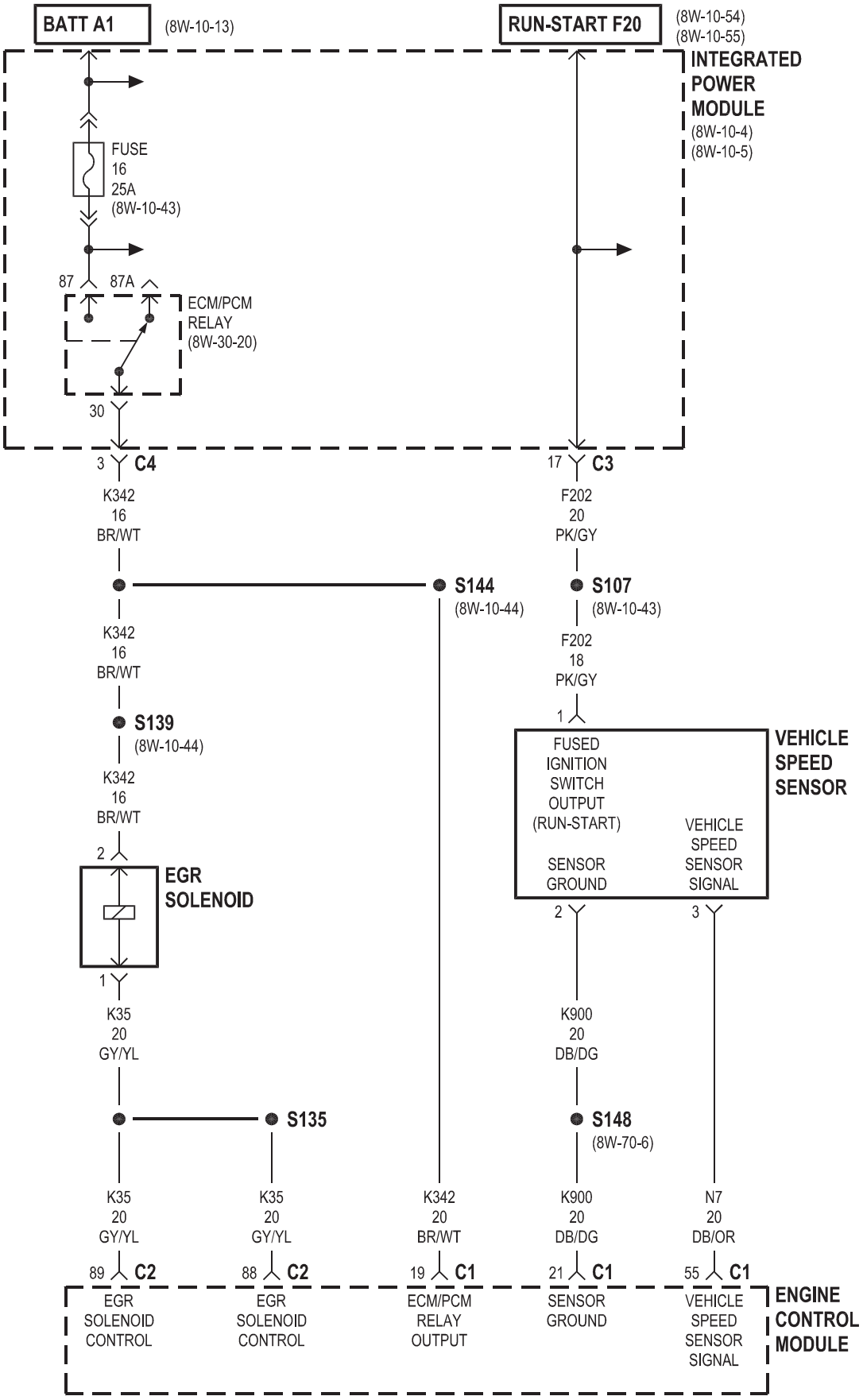
BATT A1
(8W-10-13)
RUN-START F20
(8W-10-54)
(8W-10-55)
INTEGRATED POWER MODULE
(8W-10-4)
(8W-10-5)
FUSE 16 25A
(8W-10-43)
87
87A
ECM/PCM RELAY
(8W-30-20)
30
3 C4
17 C3
K342 16 BR/WT
F202 20 PK/GY
S144
(8W-10-44)
S107
(8W-10-43)
K342 16 BR/WT
F202 18 PK/GY
S139
(8W-10-44)
1
FUSED IGNITION SWITCH OUTPUT (RUN-START)
SENSOR GROUND
VEHICLE SPEED SENSOR SIGNAL
VEHICLE SPEED SENSOR
K342 16 BR/WT
2
EGR SOLENOID
2
3
1
K35 20 GY/YL
K900 20 DB/DG
S135
S148
(8W-70-6)
K35 20 GY/YL
K35 20 GY/YL
K342 20 BR/WT
K900 20 DB/DG
N7 20 DB/OR
89 C2
88 C2
19 C1
21 C1
55 C1
EGR SOLENOID CONTROL
EGR SOLENOID CONTROL
ECM/PCM RELAY OUTPUT
SENSOR GROUND
VEHICLE SPEED SENSOR SIGNAL
ENGINE CONTROL MODULE

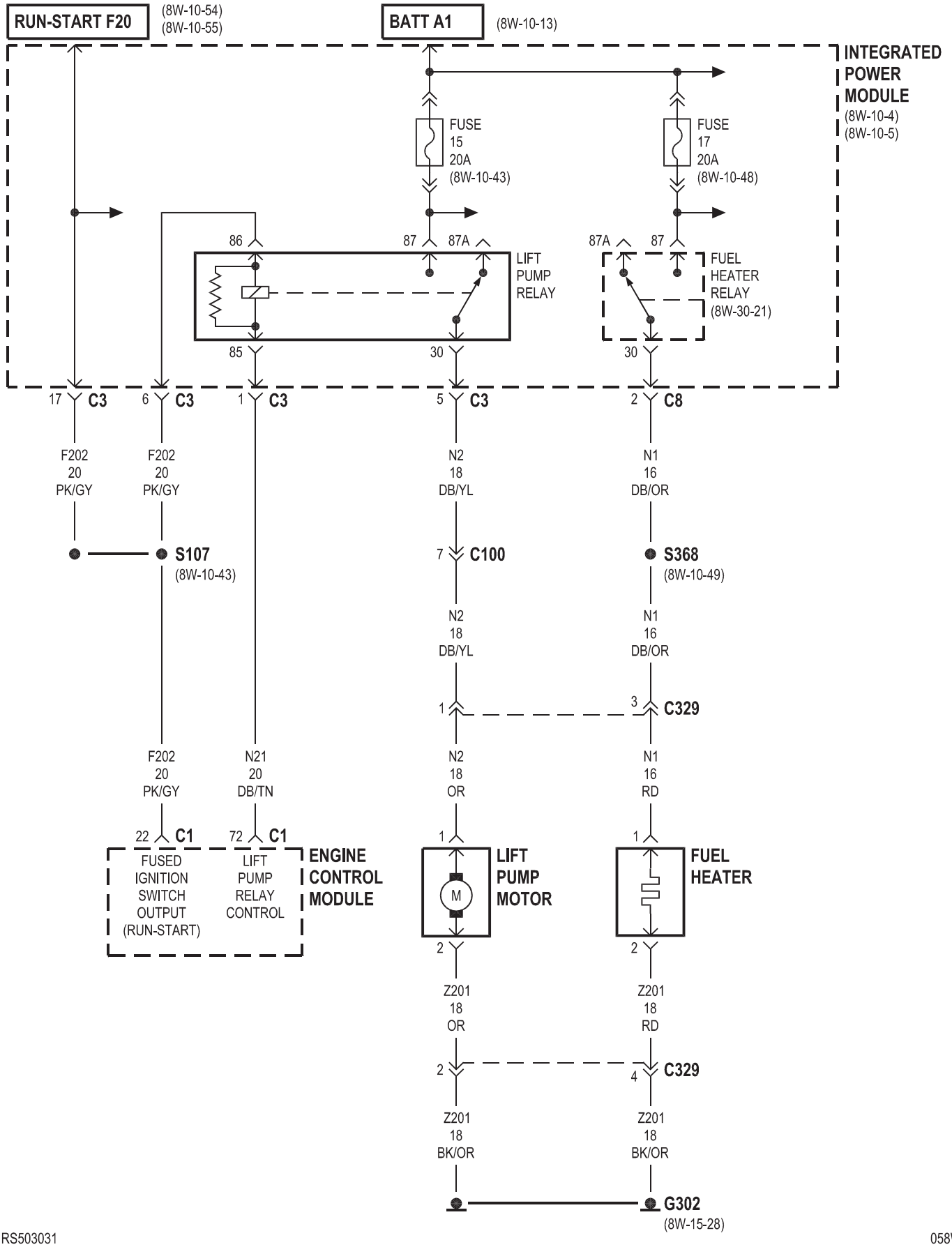
RUN-START F20
(8W-10-54)
(8W-10-55)
BATT A1
(8W-10-13)
INTEGRATED POWER MODULE
(8W-10-4)
(8W-10-5)
FUSE 15 20A (8W-10-43)
FUSE 17 20A (8W-10-48)
86
87
87A
LIFT PUMP RELAY
87A
87
FUEL HEATER RELAY (8W-30-21)
85
30
30
17 C3
6 C3
1 C3
5 C3
2 C8
F202 20 PK/GY
F202 20 PK/GY
N2 18 DB/YL
N1 16 DB/OR
S107 (8W-10-43)
7 C100
S368 (8W-10-49)
N2 18 DB/YL
N1 16 DB/OR
1
3 C329
F202 20 PK/GY
N21 20 DB/TN
N2 18 OR
N1 16 RD
22 C1
72 C1
1
1
FUSED IGNITION SWITCH OUTPUT (RUN-START)
LIFT PUMP RELAY CONTROL
ENGINE CONTROL MODULE
M
LIFT PUMP MOTOR
FUEL HEATER
2
2
Z201 18 OR
Z201 18 RD
2
4 C329
Z201 18 BK/OR
Z201 18 BK/OR
G302 (8W-15-28)

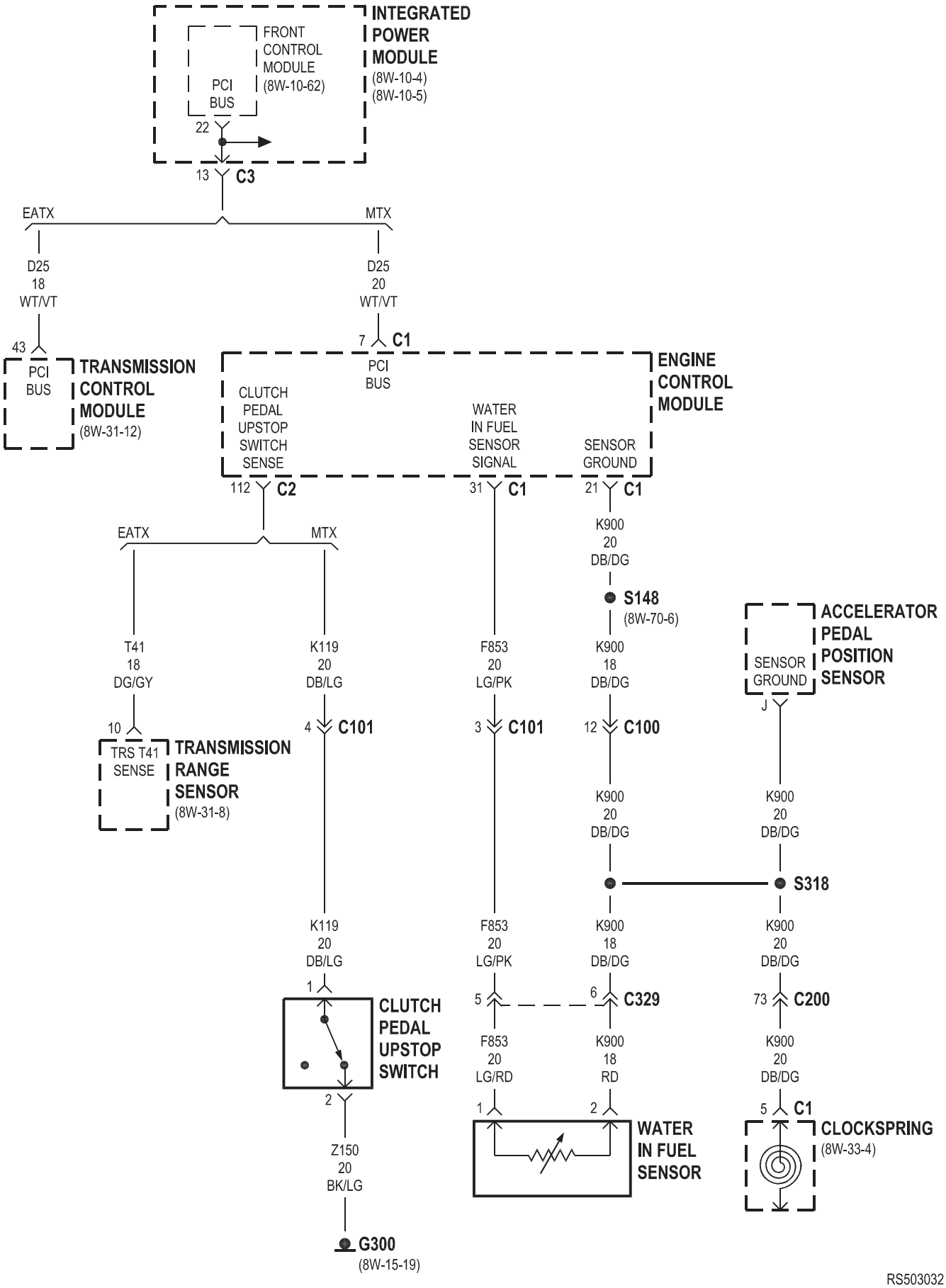
INTEGRATED POWER MODULE
(8W-10-4)
(8W-10-5)
FRONT CONTROL MODULE
(8W-10-62)
PCI BUS
22
13 C3
EATX
MTX
D25
18
WT/VT
D25
20
WT/VT
43
7 C1
PCI BUS
TRANSMISSION CONTROL MODULE
(8W-31-12)
ENGINE CONTROL MODULE
CLUTCH PEDAL UPSTOP SWITCH SENSE
WATER IN FUEL SENSOR SIGNAL
SENSOR GROUND
112 C2
31 C1
21 C1
K900
20
DB/DG
S148
(8W-70-6)
ACCELERATOR PEDAL POSITION SENSOR
SENSOR GROUND
J
T41
18
DG/GY
K119
20
DB/LG
F853
20
LG/PK
K900
18
DB/DG
10
4 C101
3 C101
12 C100
TRS T41 SENSE
TRANSMISSION RANGE SENSOR
(8W-31-8)
K900
20
DB/DG
S318
K119
20
DB/LG
F853
20
LG/PK
K900
18
DB/DG
K900
20
DB/DG
1
5
6 C329
73 C200
CLUTCH PEDAL UPSTOP SWITCH
F853
20
LG/RD
K900
18
RD
K900
20
DB/DG
2
1
2
5 C1
WATER IN FUEL SENSOR
CLOCKSPRING
(8W-33-4)
Z150
20
BK/LG
G300
(8W-15-19)

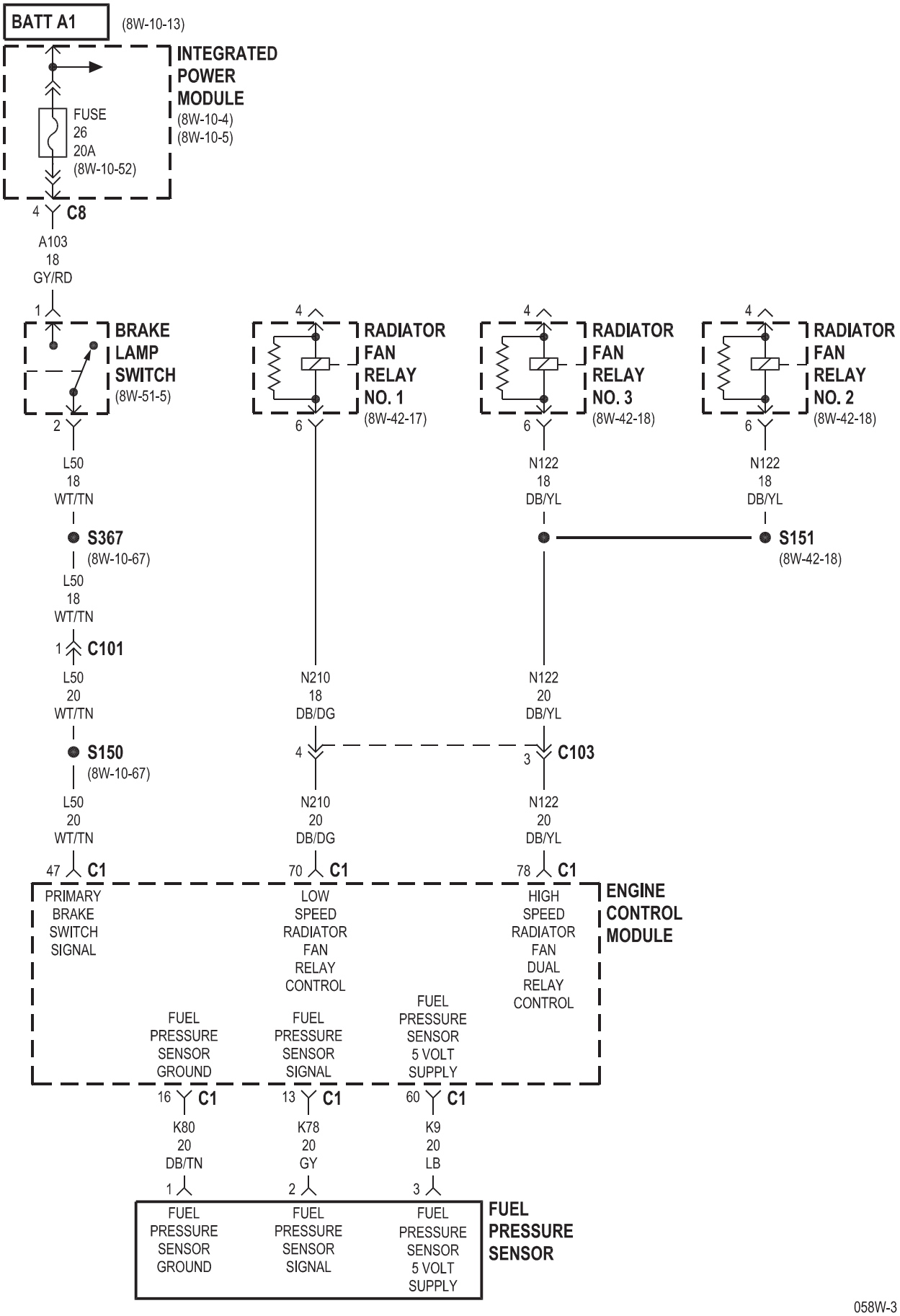
BATT A1
(8W-10-13)
INTEGRATED POWER MODULE
(8W-10-4)
(8W-10-5)
FUSE 26 20A
(8W-10-52)
4 C8
A103 18 GY/RD
1
BRAKE LAMP SWITCH
(8W-51-5)
2
L50 18 WT/TN
S367
(8W-10-67)
L50 18 WT/TN
1 C101
L50 20 WT/TN
S150
(8W-10-67)
L50 20 WT/TN
47 C1
PRIMARY BRAKE SWITCH SIGNAL
4
RADIATOR FAN RELAY NO. 1
(8W-42-17)
6
N210 18 DB/DG
4
N210 20 DB/DG
70 C1
LOW SPEED RADIATOR FAN RELAY CONTROL
4
RADIATOR FAN RELAY NO. 3
(8W-42-18)
6
N122 18 DB/YL
N122 20 DB/YL
3 C103
N122 20 DB/YL
78 C1
HIGH SPEED RADIATOR FAN DUAL RELAY CONTROL
4
RADIATOR FAN RELAY NO. 2
(8W-42-18)
6
N122 18 DB/YL
S151
(8W-42-18)
ENGINE CONTROL MODULE
FUEL PRESSURE SENSOR GROUND
FUEL PRESSURE SENSOR SIGNAL
FUEL PRESSURE SENSOR 5 VOLT SUPPLY
16 C1
13 C1
60 C1
K80 20 DB/TN
K78 20 GY
K9 20 LB
1
2
3
FUEL PRESSURE SENSOR GROUND
FUEL PRESSURE SENSOR SIGNAL
FUEL PRESSURE SENSOR 5 VOLT SUPPLY
FUEL PRESSURE SENSOR

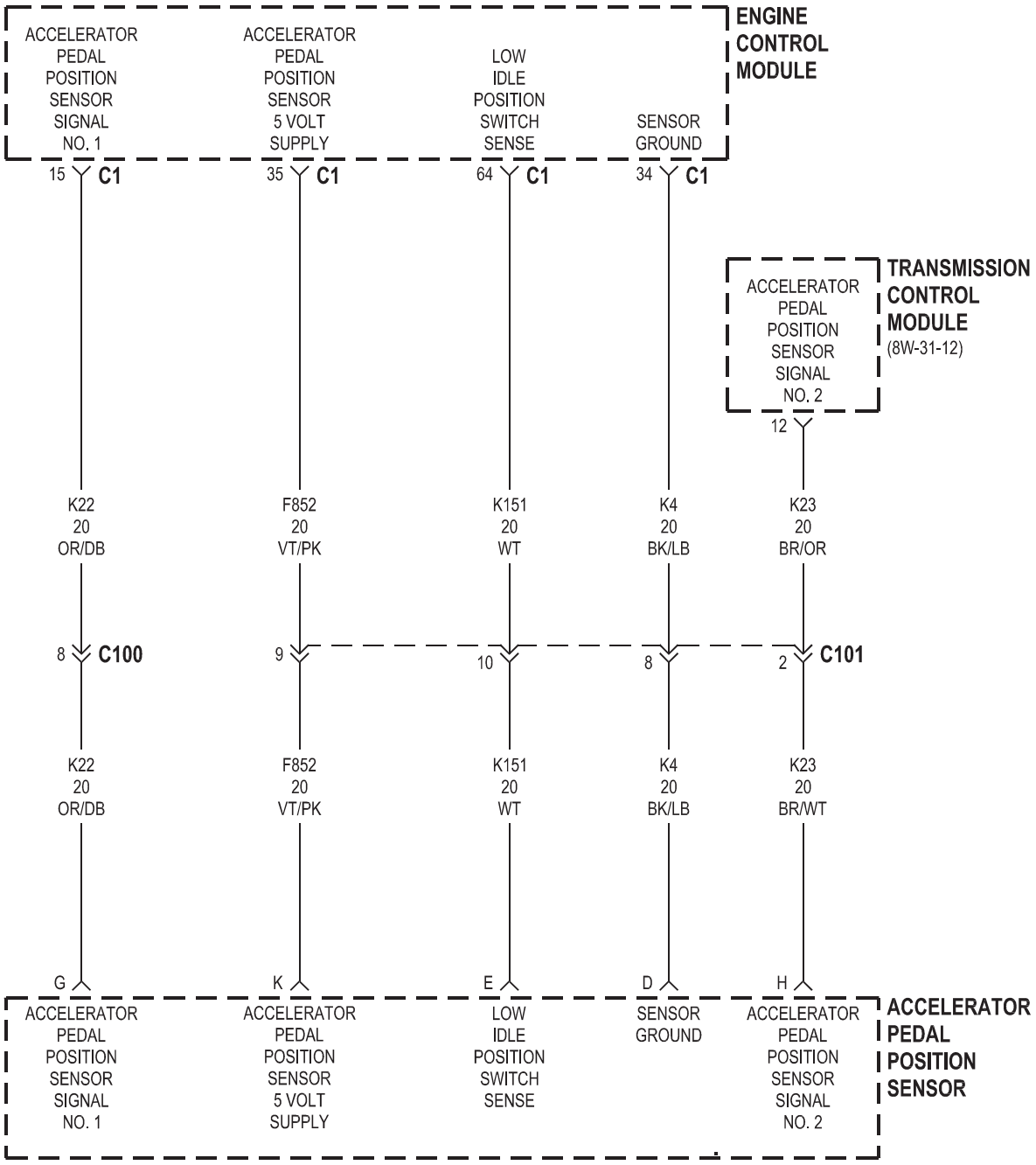
ENGINE CONTROL MODULE
ACCELERATOR PEDAL POSITION SENSOR SIGNAL NO. 1
ACCELERATOR PEDAL POSITION SENSOR 5 VOLT SUPPLY
LOW IDLE POSITION SWITCH SENSE
SENSOR GROUND
15 C1
35 C1
64 C1
34 C1
TRANSMISSION CONTROL MODULE
(8W-31-12)
ACCELERATOR PEDAL POSITION SENSOR SIGNAL NO. 2
12
K22 20 OR/DB
F852 20 VT/PK
K151 20 WT
K4 20 BK/LB
K23 20 BR/OR
8 C100
9
10
8
2 C101
K22 20 OR/DB
F852 20 VT/PK
K151 20 WT
K4 20 BK/LB
K23 20 BR/WT
G
K
E
D
H
ACCELERATOR PEDAL POSITION SENSOR
ACCELERATOR PEDAL POSITION SENSOR SIGNAL NO. 1
ACCELERATOR PEDAL POSITION SENSOR 5 VOLT SUPPLY
LOW IDLE POSITION SWITCH SENSE
SENSOR GROUND
ACCELERATOR PEDAL POSITION SENSOR SIGNAL NO. 2

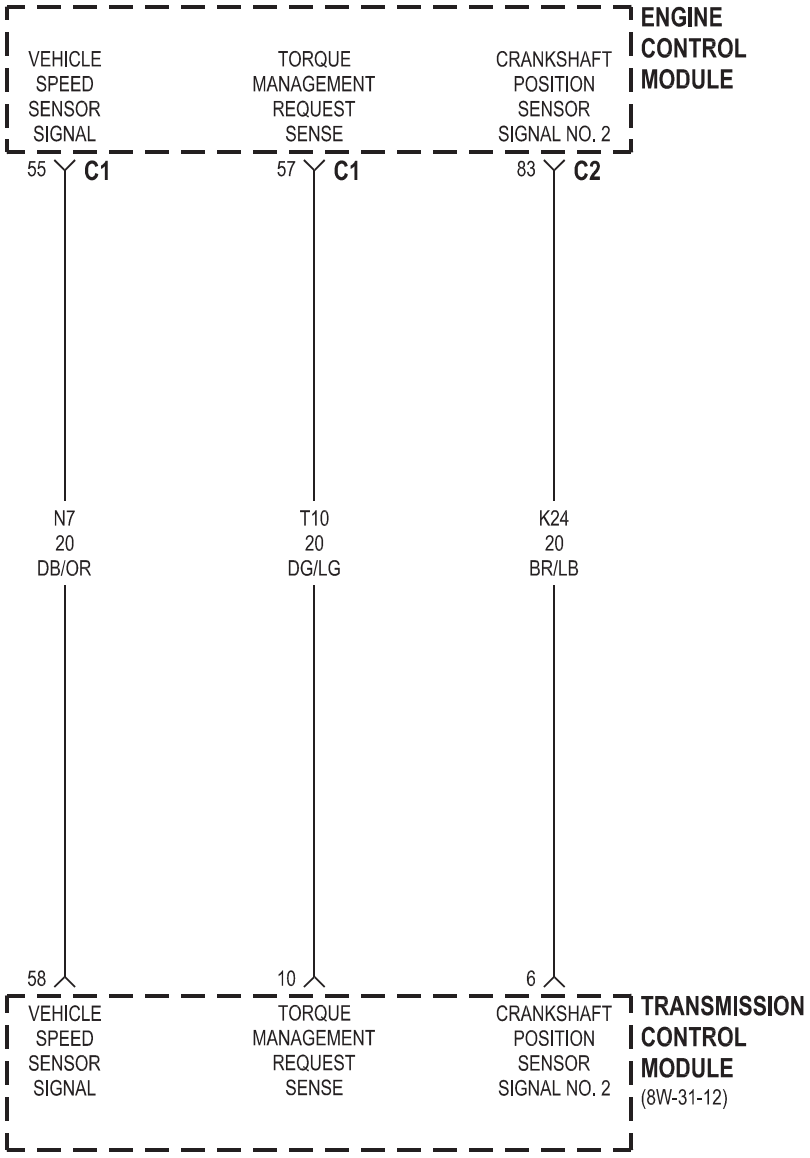
ENGINE CONTROL MODULE
VEHICLE SPEED SENSOR SIGNAL
TORQUE MANAGEMENT REQUEST SENSE
CRANKSHAFT POSITION SENSOR SIGNAL NO. 2
55 C1
57 C1
83 C2
N7 20 DB/OR
T10 20 DG/LG
K24 20 BR/LB
58
10
6
VEHICLE SPEED SENSOR SIGNAL
TORQUE MANAGEMENT REQUEST SENSE
CRANKSHAFT POSITION SENSOR SIGNAL NO. 2
TRANSMISSION CONTROL MODULE
(8W-31-12)

8W-31 TRANSMISSION CONTROL SYSTEM

Component	Page
Accelerator Pedal Position Sensor	8W-31-12
Battery	8W-31-2, 5, 6, 7, 10, 11
Brake Transmission Shift Interlock Solenoid	8W-31-3, 8
Data Link Connector	8W-31-12
Engine Control Module	8W-31-8, 12
Front Control Module	8W-31-3, 6, 8, 12
Fuse 15	8W-31-2, 5
Fuselink	8W-31-7, 10, 11
G101	8W-31-2, 5, 6, 7
Input Speed Sensor	8W-31-4, 9
Integrated Power Module	8W-31-2, 3, 5, 6, 8, 12
Output Speed Sensor	8W-31-4, 9
Powertrain Control Module	8W-31-2, 3, 4, 5, 6
Transmission Control Module	8W-31-7, 8, 9, 10, 11, 12
Transmission Control Relay	8W-31-2, 5, 7, 10, 11
Transmission Range Sensor	8W-31-3, 4, 8, 9
Transmission Solenoid/Pressure Switch Assembly	8W-31-2, 5, 6, 7, 10, 11

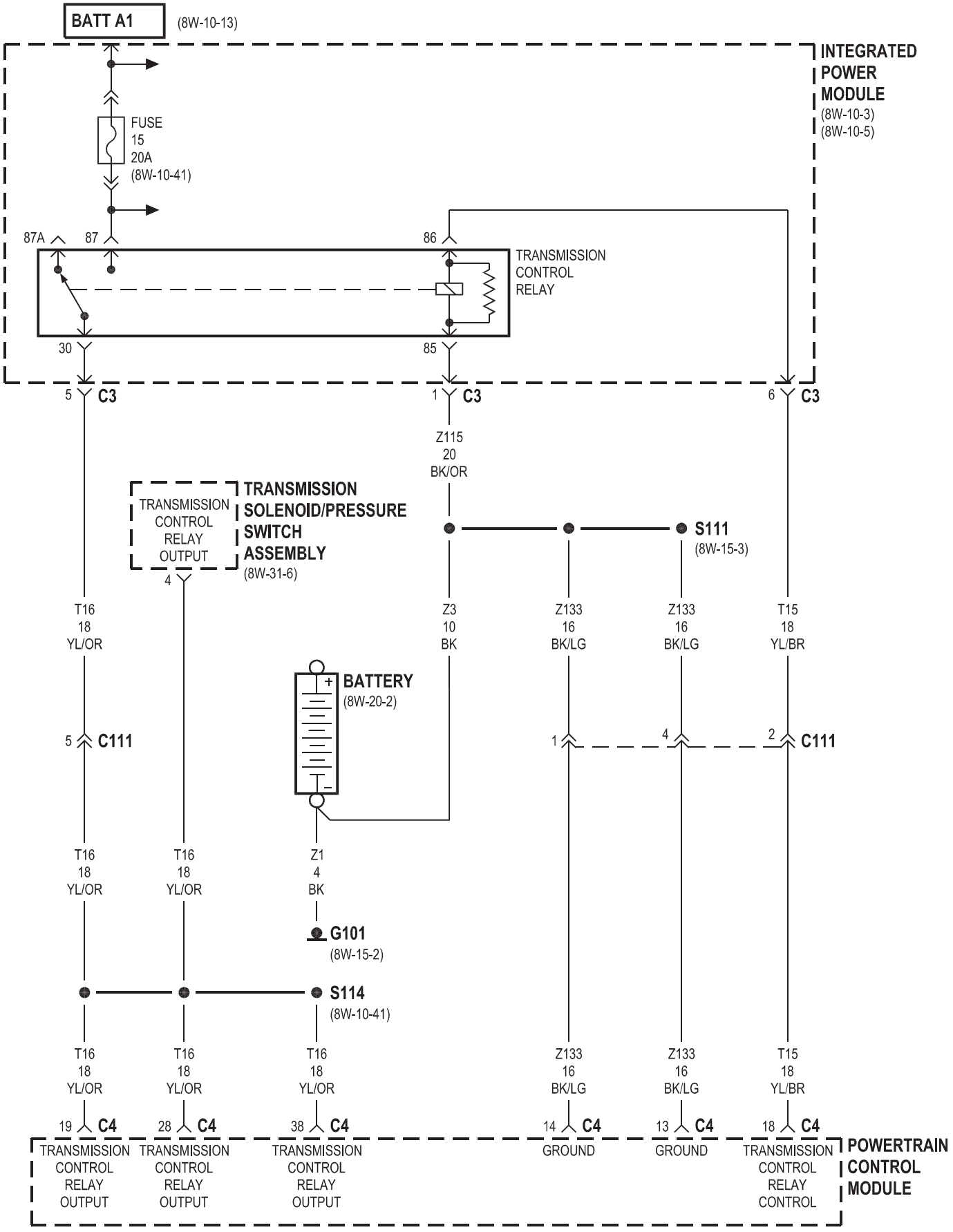
BATT A1
(8W-10-13)
INTEGRATED POWER MODULE
(8W-10-3)
(8W-10-5)
FUSE 15 20A
(8W-10-41)
87A
87
86
TRANSMISSION CONTROL RELAY
30
85
5 C3
1 C3
6 C3
Z115 20 BK/OR
TRANSMISSION CONTROL RELAY OUTPUT
TRANSMISSION SOLENOID/PRESSURE SWITCH ASSEMBLY
(8W-31-6)
4
S111
(8W-15-3)
T16 18 YL/OR
Z3 10 BK
Z133 16 BK/LG
Z133 16 BK/LG
T15 18 YL/BR
BATTERY
(8W-20-2)
5 C111
1
4
2 C111
T16 18 YL/OR
T16 18 YL/OR
Z1 4 BK
G101
(8W-15-2)
S114
(8W-10-41)
T16 18 YL/OR
T16 18 YL/OR
T16 18 YL/OR
Z133 16 BK/LG
Z133 16 BK/LG
T15 18 YL/BR
19 C4
28 C4
38 C4
14 C4
13 C4
18 C4
TRANSMISSION CONTROL RELAY OUTPUT
TRANSMISSION CONTROL RELAY OUTPUT
TRANSMISSION CONTROL RELAY OUTPUT
GROUND
GROUND
TRANSMISSION CONTROL RELAY CONTROL
POWERTRAIN CONTROL MODULE

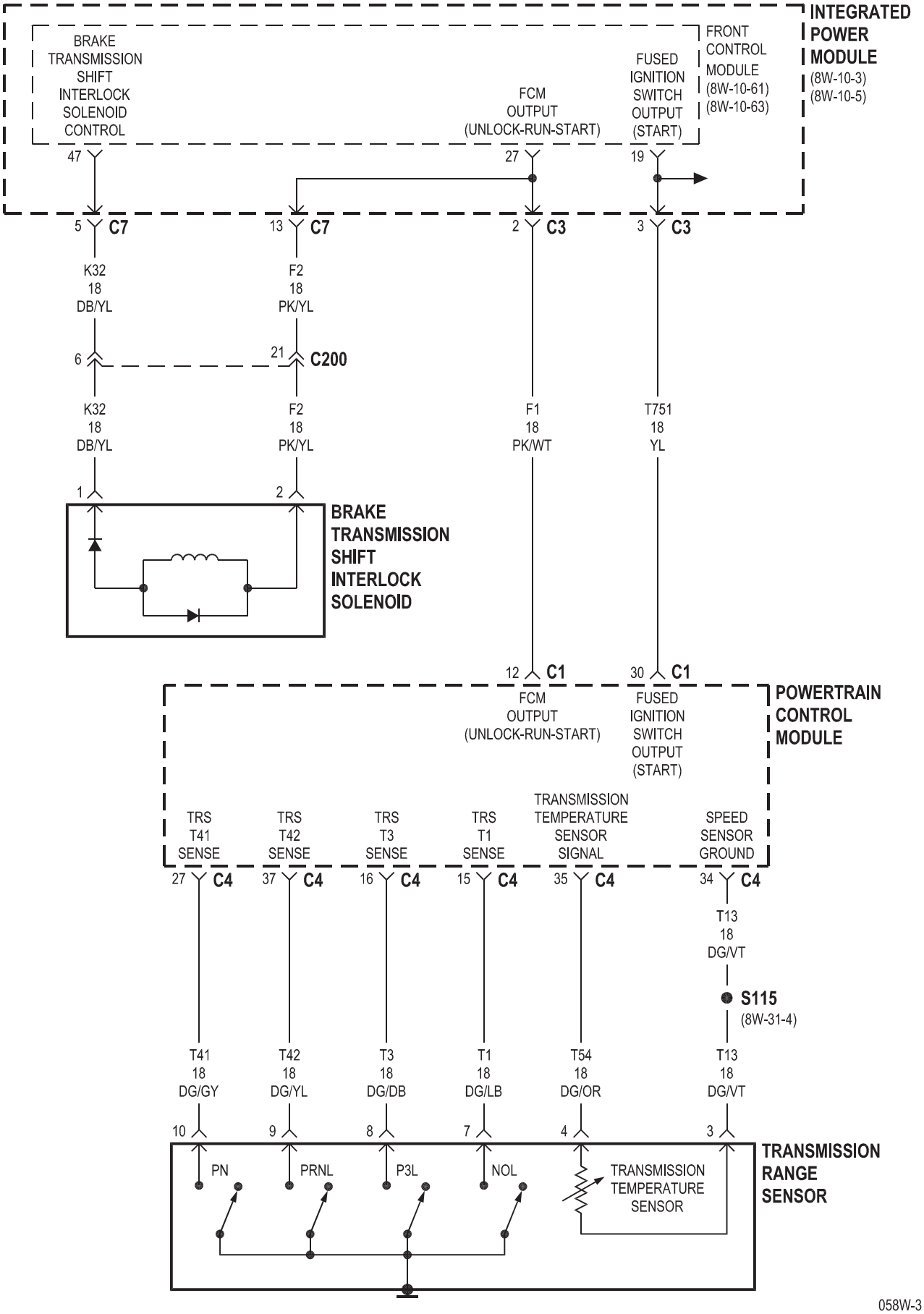
INTEGRATED POWER MODULE
(8W-10-3)
(8W-10-5)
FRONT CONTROL MODULE
(8W-10-61)
(8W-10-63)
BRAKE TRANSMISSION SHIFT INTERLOCK SOLENOID CONTROL
FCM OUTPUT (UNLOCK-RUN-START)
FUSED IGNITION SWITCH OUTPUT (START)
47
27
19
5 C7
13 C7
2 C3
3 C3
K32 18 DB/YL
F2 18 PK/YL
6
21 C200
K32 18 DB/YL
F2 18 PK/YL
F1 18 PK/WT
T751 18 YL
1
2
BRAKE TRANSMISSION SHIFT INTERLOCK SOLENOID
12 C1
30 C1
FCM OUTPUT (UNLOCK-RUN-START)
FUSED IGNITION SWITCH OUTPUT (START)
POWERTRAIN CONTROL MODULE
TRS T41 SENSE
TRS T42 SENSE
TRS T3 SENSE
TRS T1 SENSE
TRANSMISSION TEMPERATURE SENSOR SIGNAL
SPEED SENSOR GROUND
27 C4
37 C4
16 C4
15 C4
35 C4
34 C4
T13 18 DG/VT
S115
(8W-31-4)
T41 18 DG/GY
T42 18 DG/YL
T3 18 DG/DB
T1 18 DG/LB
T54 18 DG/OR
T13 18 DG/VT
10
9
8
7
4
3
PN
PRNL
P3L
NOL
TRANSMISSION TEMPERATURE SENSOR
TRANSMISSION RANGE SENSOR

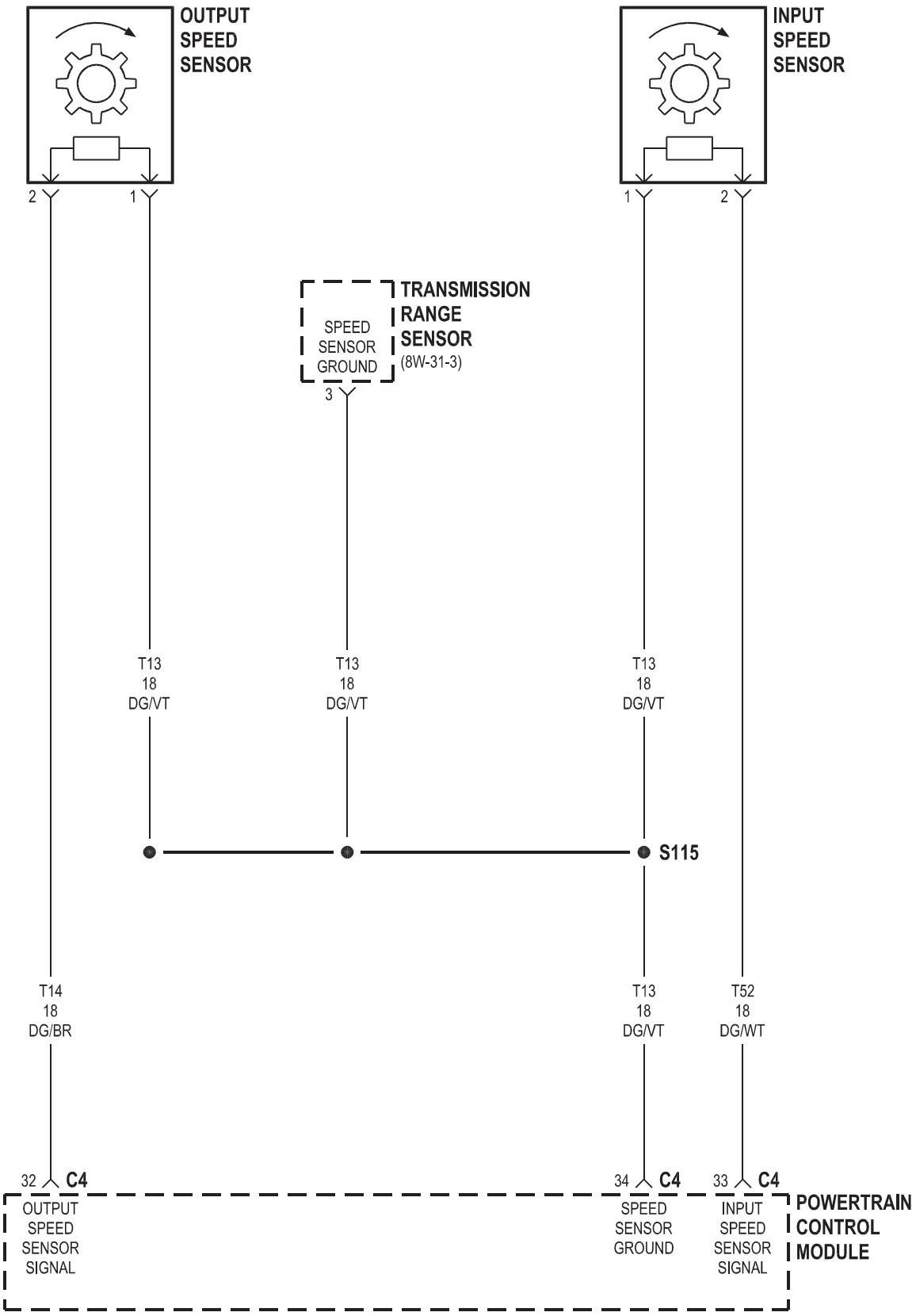
OUTPUT SPEED SENSOR
INPUT SPEED SENSOR
2
1
1
2
TRANSMISSION RANGE SENSOR
(8W-31-3)
SPEED SENSOR GROUND
3
T13
18
DG/VT
T13
18
DG/VT
T13
18
DG/VT
S115
T14
18
DG/BR
T13
18
DG/VT
T52
18
DG/WT
32 C4
34 C4
33 C4
OUTPUT SPEED SENSOR SIGNAL
SPEED SENSOR GROUND
INPUT SPEED SENSOR SIGNAL
POWERTRAIN CONTROL MODULE

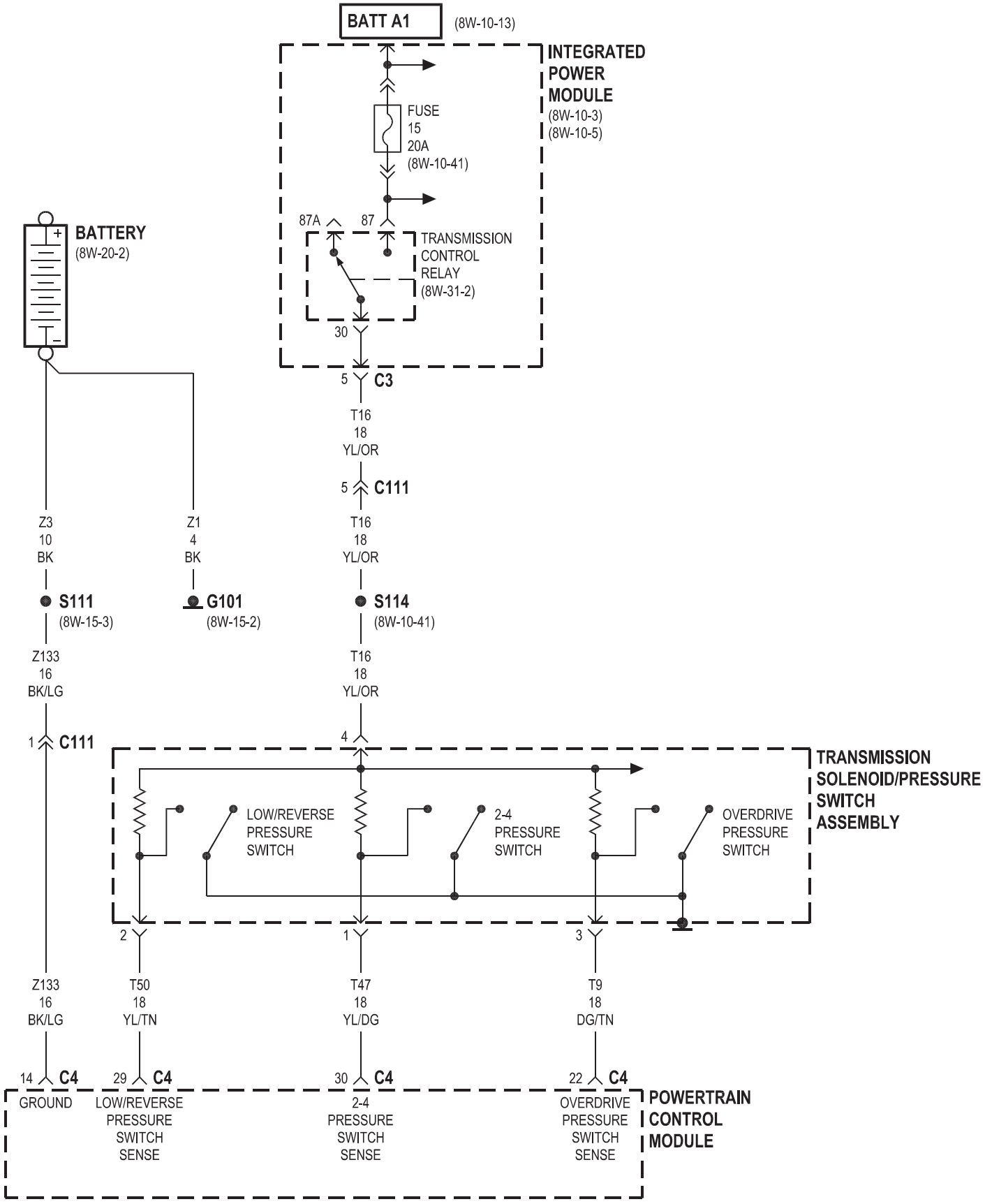
BATT A1
(8W-10-13)
INTEGRATED POWER MODULE
(8W-10-3)
(8W-10-5)
FUSE 15 20A
(8W-10-41)
87A
87
TRANSMISSION CONTROL RELAY
(8W-31-2)
30
5
C3
T16 18 YL/OR
5
C111
T16 18 YL/OR
BATTERY
(8W-20-2)
Z3 10 BK
Z1 4 BK
S111
(8W-15-3)
G101
(8W-15-2)
S114
(8W-10-41)
Z133 16 BK/LG
T16 18 YL/OR
1
C111
4
TRANSMISSION SOLENOID/PRESSURE SWITCH ASSEMBLY
LOW/REVERSE PRESSURE SWITCH
2-4 PRESSURE SWITCH
OVERDRIVE PRESSURE SWITCH
2
1
3
Z133 16 BK/LG
T50 18 YL/TN
T47 18 YL/DG
T9 18 DG/TN
14
C4
29
C4
30
C4
22
C4
GROUND
LOW/REVERSE PRESSURE SWITCH SENSE
2-4 PRESSURE SWITCH SENSE
OVERDRIVE PRESSURE SWITCH SENSE
POWERTRAIN CONTROL MODULE

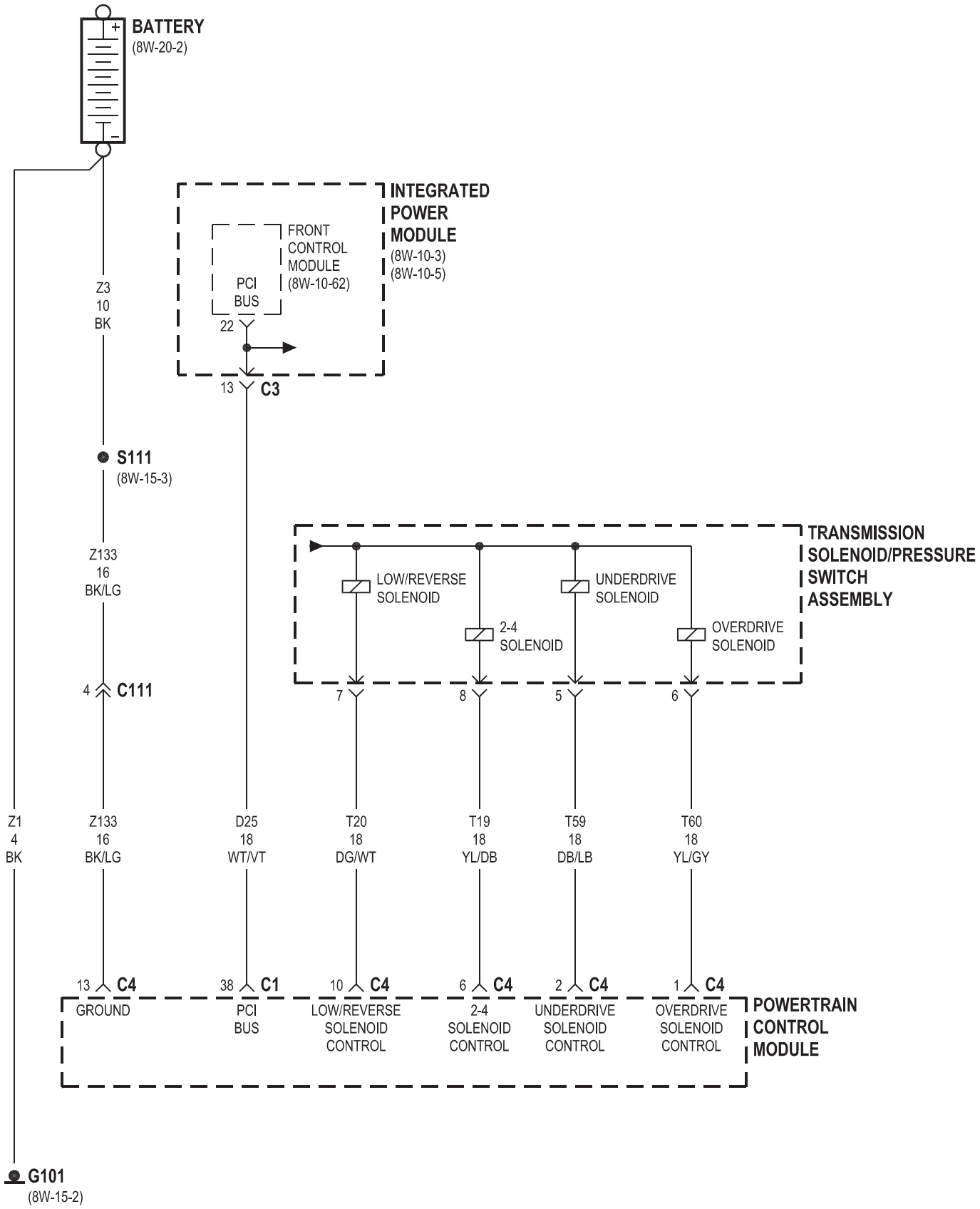
BATTERY
(8W-20-2)
INTEGRATED POWER MODULE
(8W-10-3)
(8W-10-5)
FRONT CONTROL MODULE
(8W-10-62)
PCI BUS
22
13 C3
Z3
10
BK
S111
(8W-15-3)
Z133
16
BK/LG
4 C111
TRANSMISSION SOLENOID/PRESSURE SWITCH ASSEMBLY
LOW/REVERSE SOLENOID
2-4 SOLENOID
UNDERDRIVE SOLENOID
OVERDRIVE SOLENOID
7
8
5
6
Z1
4
BK
Z133
16
BK/LG
D25
18
WT/VT
T20
18
DG/WT
T19
18
YL/DB
T59
18
DB/LB
T60
18
YL/GY
13 C4
GROUND
38 C1
PCI BUS
10 C4
LOW/REVERSE SOLENOID CONTROL
6 C4
2-4 SOLENOID CONTROL
2 C4
UNDERDRIVE SOLENOID CONTROL
1 C4
OVERDRIVE SOLENOID CONTROL
POWERTRAIN CONTROL MODULE
G101
(8W-15-2)

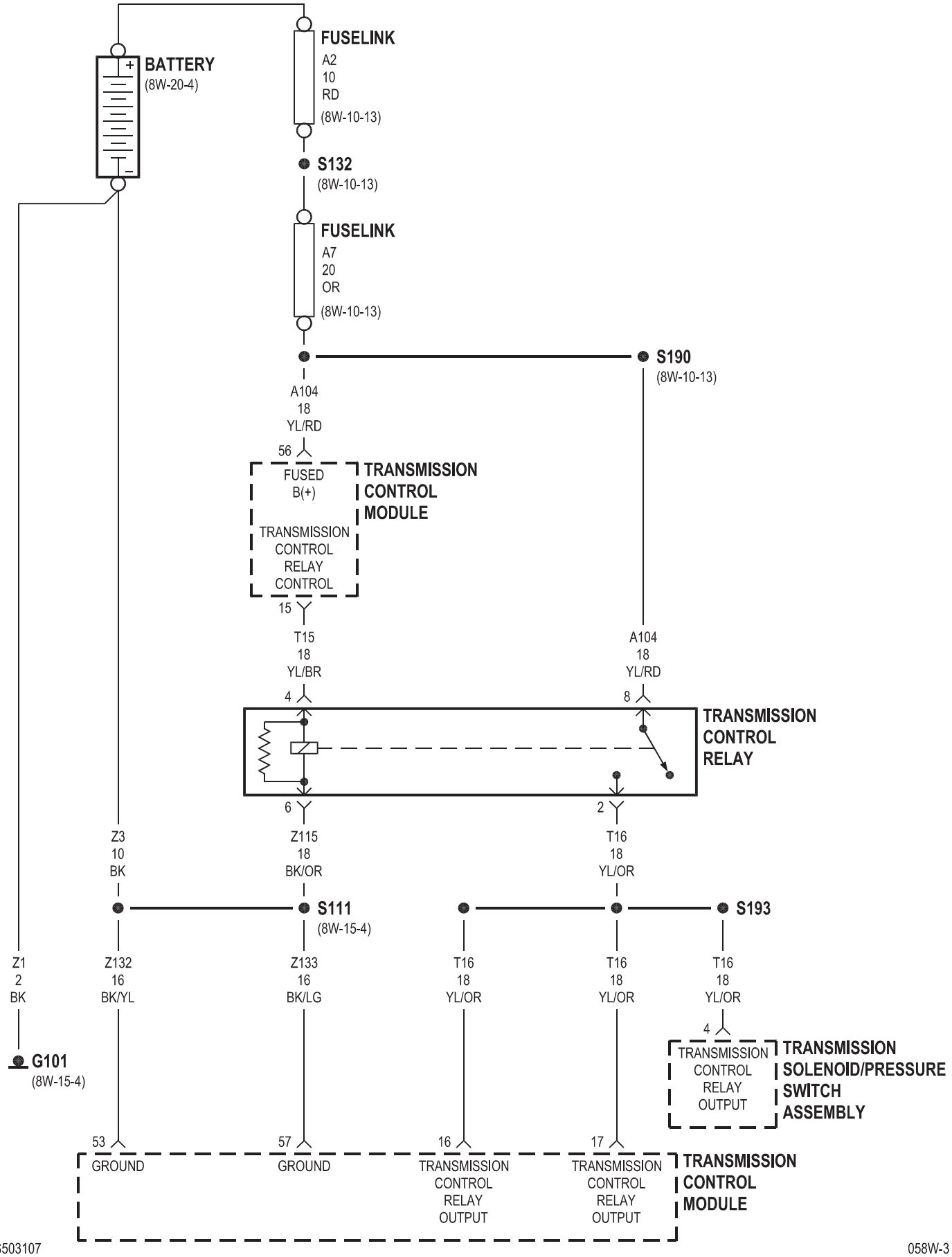
BATTERY
(8W-20-4)
FUSELINK
A2
10
RD
(8W-10-13)
S132
(8W-10-13)
FUSELINK
A7
20
OR
(8W-10-13)
S190
(8W-10-13)
A104
18
YL/RD
56
FUSED
B(+)
TRANSMISSION
CONTROL
RELAY
CONTROL
TRANSMISSION
CONTROL
MODULE
15
T15
18
YL/BR
A104
18
YL/RD
4
8
TRANSMISSION
CONTROL
RELAY
6
2
Z3
10
BK
Z115
18
BK/OR
T16
18
YL/OR
S111
(8W-15-4)
S193
Z1
2
BK
Z132
16
BK/YL
Z133
16
BK/LG
T16
18
YL/OR
T16
18
YL/OR
T16
18
YL/OR
4
G101
(8W-15-4)
TRANSMISSION
CONTROL
RELAY
OUTPUT
TRANSMISSION
SOLENOID/PRESSURE
SWITCH
ASSEMBLY
53
57
16
17
GROUND
GROUND
TRANSMISSION
CONTROL
RELAY
OUTPUT
TRANSMISSION
CONTROL
RELAY
OUTPUT
TRANSMISSION
CONTROL
MODULE

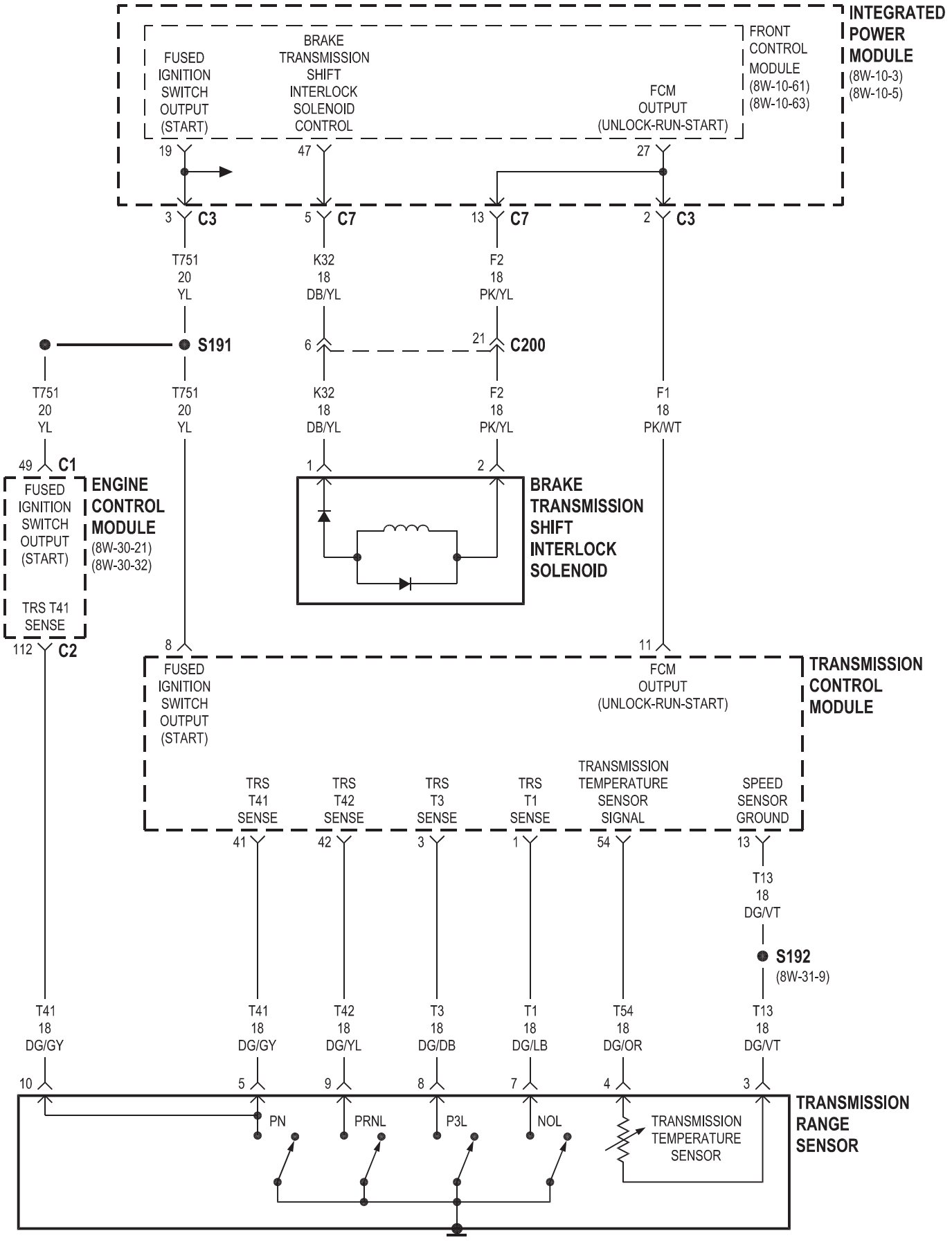
INTEGRATED POWER MODULE
(8W-10-3)
(8W-10-5)
FRONT CONTROL MODULE
(8W-10-61)
(8W-10-63)
FUSED IGNITION SWITCH OUTPUT (START)
BRAKE TRANSMISSION SHIFT INTERLOCK SOLENOID CONTROL
FCM OUTPUT (UNLOCK-RUN-START)
19
47
27
3 C3
5 C7
13 C7
2 C3
T751 20 YL
K32 18 DB/YL
F2 18 PK/YL
S191
6
21 C200
T751 20 YL
T751 20 YL
K32 18 DB/YL
F2 18 PK/YL
F1 18 PK/WT
49 C1
1
2
ENGINE CONTROL MODULE
(8W-30-21)
(8W-30-32)
FUSED IGNITION SWITCH OUTPUT (START)
TRS T41 SENSE
112 C2
BRAKE TRANSMISSION SHIFT INTERLOCK SOLENOID
8
11
TRANSMISSION CONTROL MODULE
FUSED IGNITION SWITCH OUTPUT (START)
FCM OUTPUT (UNLOCK-RUN-START)
TRS T41 SENSE
TRS T42 SENSE
TRS T3 SENSE
TRS T1 SENSE
TRANSMISSION TEMPERATURE SENSOR SIGNAL
SPEED SENSOR GROUND
41
42
3
1
54
13
T13 18 DG/VT
S192
(8W-31-9)
T41 18 DG/GY
T41 18 DG/GY
T42 18 DG/YL
T3 18 DG/DB
T1 18 DG/LB
T54 18 DG/OR
T13 18 DG/VT
10
5
9
8
7
4
3
PN
PRNL
P3L
NOL
TRANSMISSION TEMPERATURE SENSOR
TRANSMISSION RANGE SENSOR

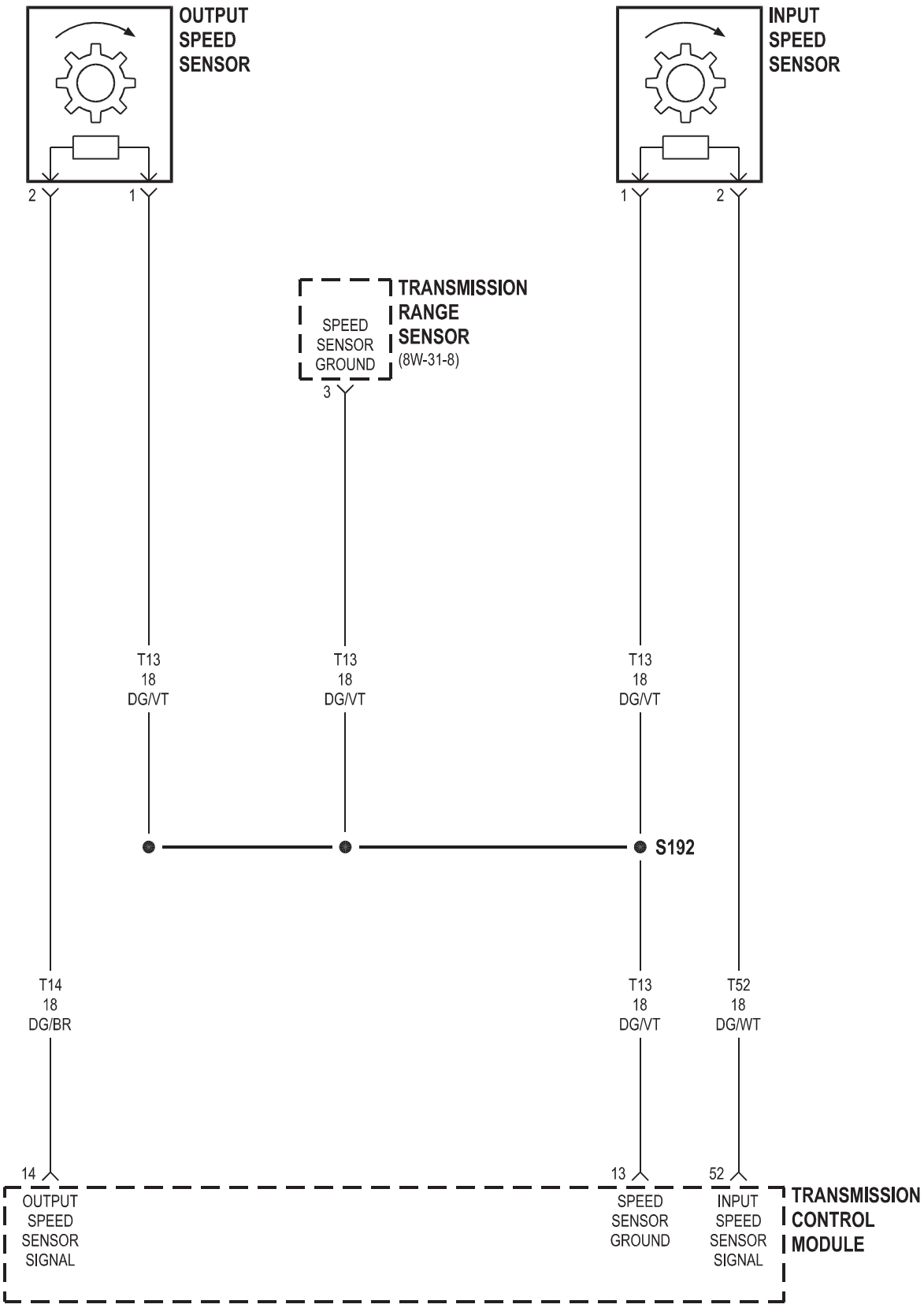
OUTPUT SPEED SENSOR
INPUT SPEED SENSOR
2
1
1
2
TRANSMISSION RANGE SENSOR
(8W-31-8)
SPEED SENSOR GROUND
3
T13
18
DG/VT
T13
18
DG/VT
T13
18
DG/VT
S192
T14
18
DG/BR
T13
18
DG/VT
T52
18
DG/WT
14
13
52
OUTPUT SPEED SENSOR SIGNAL
SPEED SENSOR GROUND
INPUT SPEED SENSOR SIGNAL
TRANSMISSION CONTROL MODULE

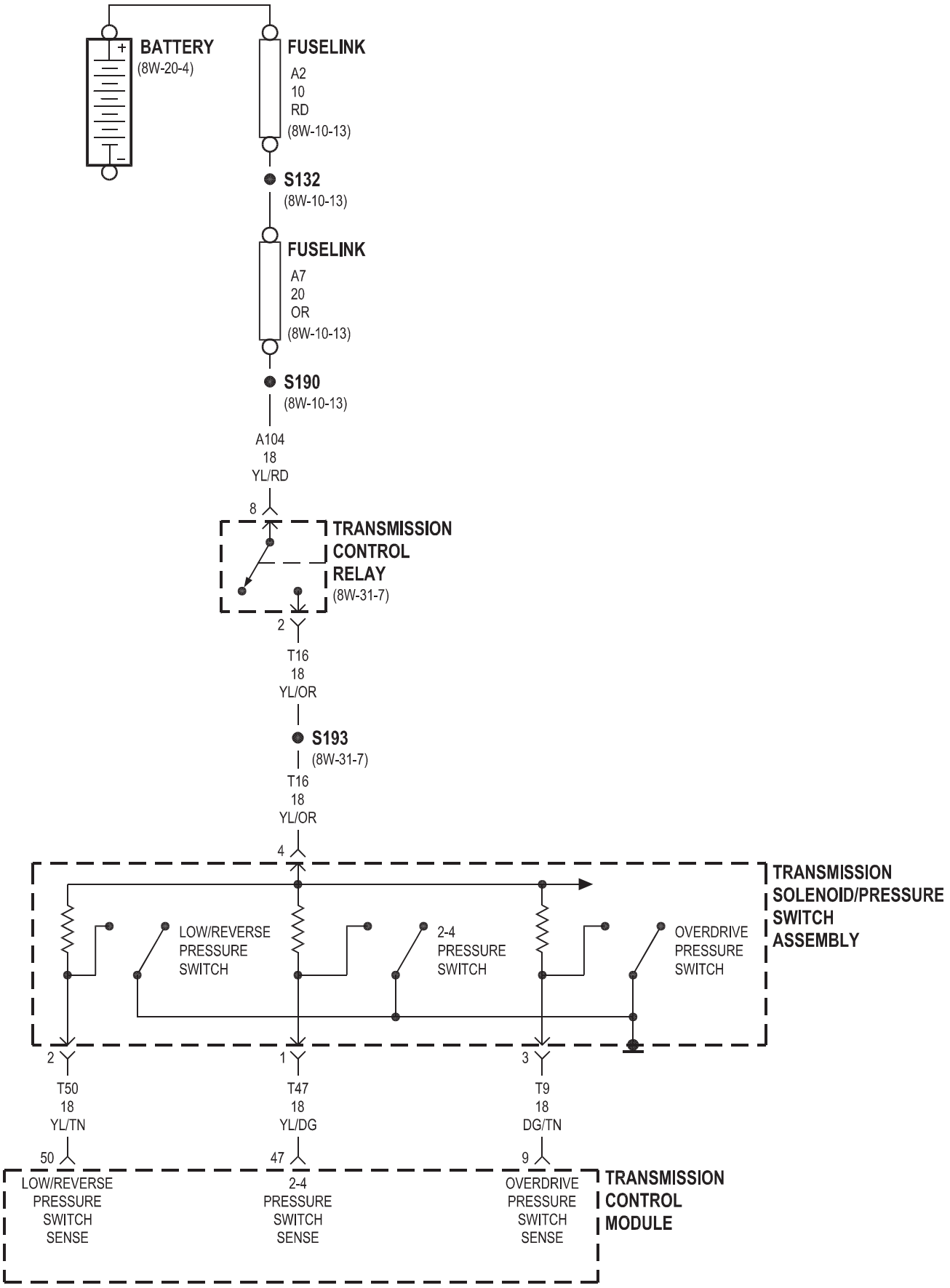
BATTERY
(8W-20-4)
FUSELINK
A2
10
RD
(8W-10-13)
S132
(8W-10-13)
FUSELINK
A7
20
OR
(8W-10-13)
S190
(8W-10-13)
A104
18
YL/RD
8
TRANSMISSION
CONTROL
RELAY
(8W-31-7)
2
T16
18
YL/OR
S193
(8W-31-7)
T16
18
YL/OR
4
TRANSMISSION
SOLENOID/PRESSURE
SWITCH
ASSEMBLY
LOW/REVERSE
PRESSURE
SWITCH
2-4
PRESSURE
SWITCH
OVERDRIVE
PRESSURE
SWITCH
2
1
3
T50
18
YL/TN
T47
18
YL/DG
T9
18
DG/TN
50
47
9
LOW/REVERSE
PRESSURE
SWITCH
SENSE
2-4
PRESSURE
SWITCH
SENSE
OVERDRIVE
PRESSURE
SWITCH
SENSE
TRANSMISSION
CONTROL
MODULE

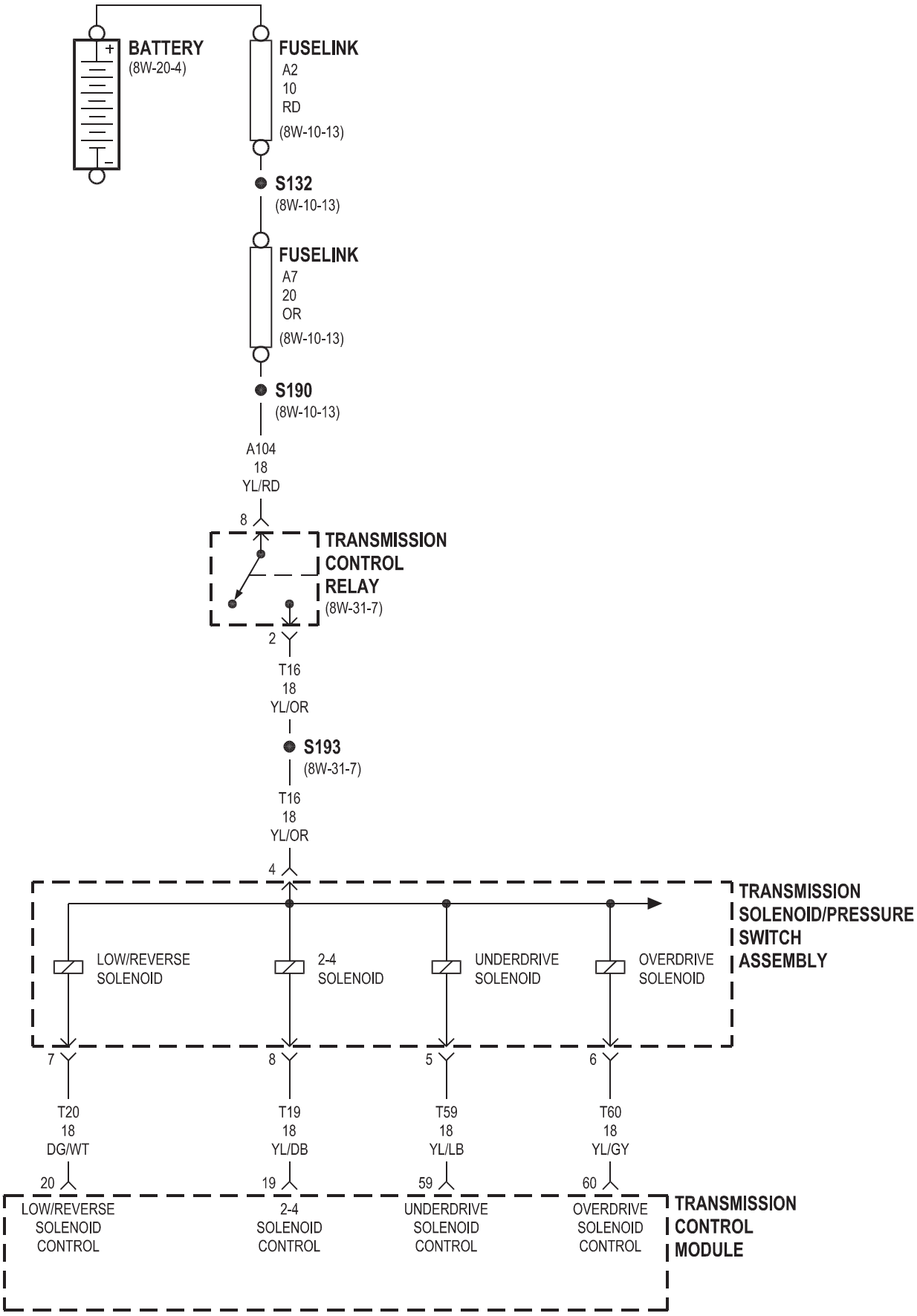
BATTERY
(8W-20-4)
FUSELINK
A2
10
RD
(8W-10-13)
S132
(8W-10-13)
FUSELINK
A7
20
OR
(8W-10-13)
S190
(8W-10-13)
A104
18
YL/RD
8
TRANSMISSION
CONTROL
RELAY
(8W-31-7)
2
T16
18
YL/OR
S193
(8W-31-7)
T16
18
YL/OR
4
TRANSMISSION
SOLENOID/PRESSURE
SWITCH
ASSEMBLY
LOW/REVERSE
SOLENOID
2-4
SOLENOID
UNDERDRIVE
SOLENOID
OVERDRIVE
SOLENOID
7
8
5
6
T20
18
DG/WT
T19
18
YL/DB
T59
18
YL/LB
T60
18
YL/GY
20
19
59
60
LOW/REVERSE
SOLENOID
CONTROL
2-4
SOLENOID
CONTROL
UNDERDRIVE
SOLENOID
CONTROL
OVERDRIVE
SOLENOID
CONTROL
TRANSMISSION
CONTROL
MODULE

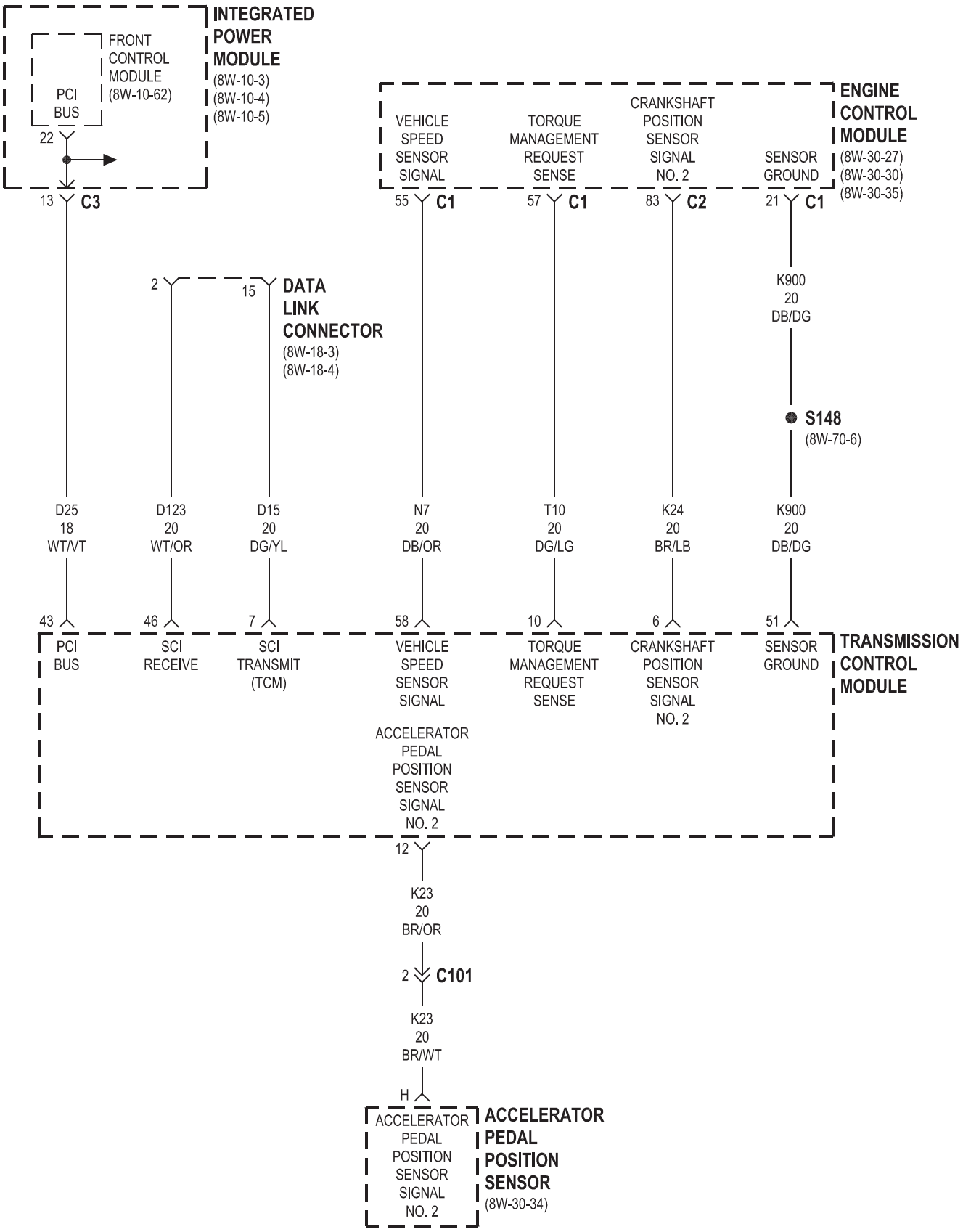
INTEGRATED POWER MODULE
(8W-10-3)
(8W-10-4)
(8W-10-5)
FRONT CONTROL MODULE (8W-10-62)
PCI BUS
22
13 C3
ENGINE CONTROL MODULE
(8W-30-27)
(8W-30-30)
(8W-30-35)
VEHICLE SPEED SENSOR SIGNAL
55 C1
TORQUE MANAGEMENT REQUEST SENSE
57 C1
CRANKSHAFT POSITION SENSOR SIGNAL NO. 2
83 C2
SENSOR GROUND
21 C1
DATA LINK CONNECTOR
(8W-18-3)
(8W-18-4)
2
15
K900
20
DB/DG
S148
(8W-70-6)
D25
18
WT/VT
D123
20
WT/OR
D15
20
DG/YL
N7
20
DB/OR
T10
20
DG/LG
K24
20
BR/LB
K900
20
DB/DG
43
46
7
58
10
6
51
PCI BUS
SCI RECEIVE
SCI TRANSMIT (TCM)
VEHICLE SPEED SENSOR SIGNAL
TORQUE MANAGEMENT REQUEST SENSE
CRANKSHAFT POSITION SENSOR SIGNAL NO. 2
SENSOR GROUND
TRANSMISSION CONTROL MODULE
ACCELERATOR PEDAL POSITION SENSOR SIGNAL NO. 2
12
K23
20
BR/OR
2 C101
K23
20
BR/WT
H
ACCELERATOR PEDAL POSITION SENSOR SIGNAL NO. 2
ACCELERATOR PEDAL POSITION SENSOR
(8W-30-34)

8W-33 VEHICLE SPEED CONTROL

Component	Page
Brake Lamp Switch	8W-33-3
Clockspring	8W-33-2, 4
Engine Control Module	8W-33-4
G101	8W-33-3
Input Speed Sensor	8W-33-2
Left Speed Control Switch	8W-33-2, 4
Output Speed Sensor	8W-33-2
Powertrain Control Module	8W-33-2, 3
Right Speed Control Switch	8W-33-2, 4
Speed Control Servo	8W-33-3
Transmission Control Module	8W-33-4
Transmission Range Sensor	8W-33-4
Vehicle Speed Sensor	8W-33-2

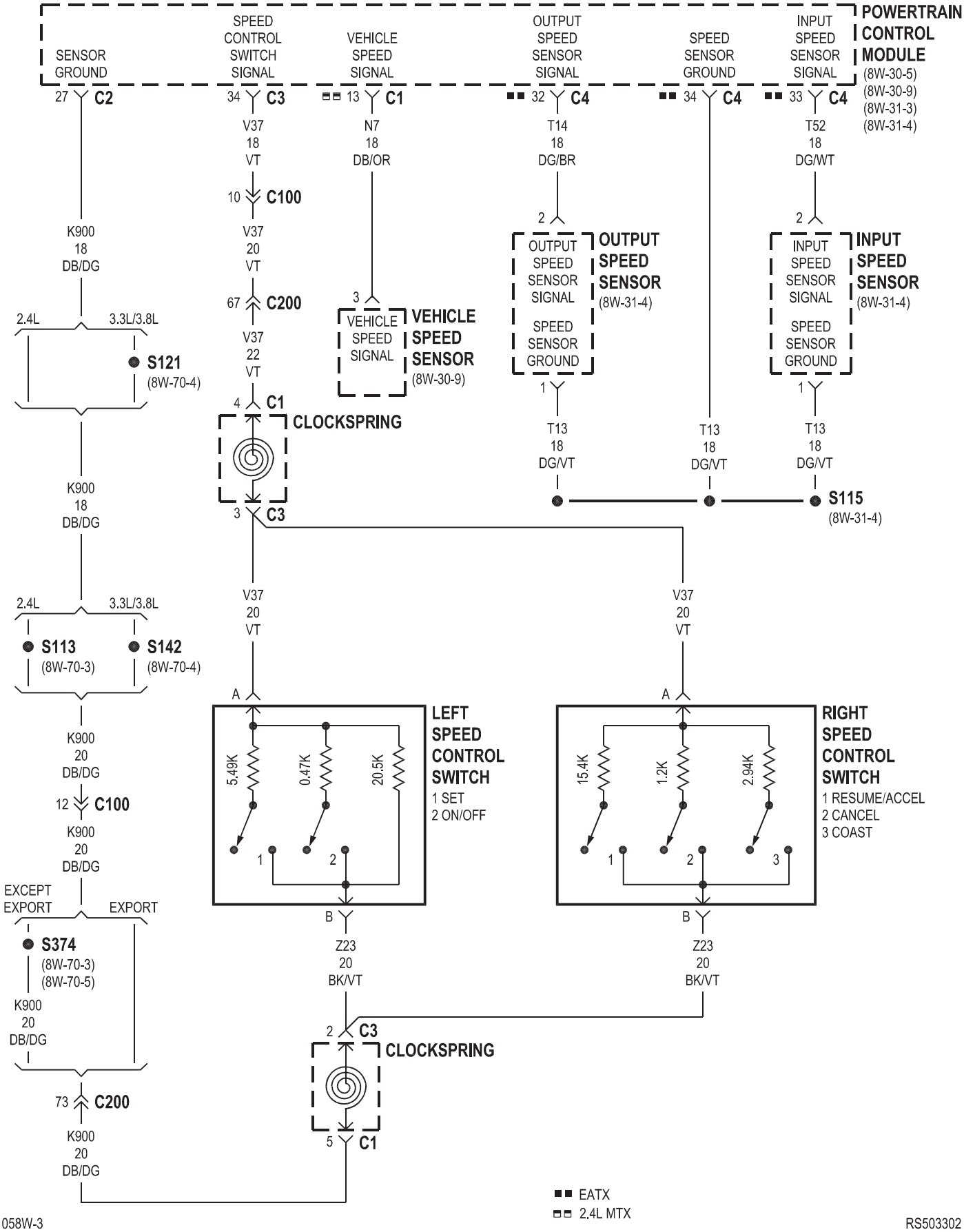
POWERTRAIN CONTROL MODULE
(8W-30-5)
(8W-30-9)
(8W-31-3)
(8W-31-4)
SENSOR GROUND
27 C2
SPEED CONTROL SWITCH SIGNAL
34 C3
VEHICLE SPEED SIGNAL
13 C1
OUTPUT SPEED SENSOR SIGNAL
32 C4
SPEED SENSOR GROUND
34 C4
INPUT SPEED SENSOR SIGNAL
33 C4
V37 18 VT
10 C100
V37 20 VT
67 C200
V37 22 VT
4 C1
CLOCKSPRING
3 C3
N7 18 DB/OR
3
VEHICLE SPEED SIGNAL
VEHICLE SPEED SENSOR
(8W-30-9)
T14 18 DG/BR
2
OUTPUT SPEED SENSOR SIGNAL
SPEED SENSOR GROUND
OUTPUT SPEED SENSOR
(8W-31-4)
1
T13 18 DG/VT
T52 18 DG/WT
2
INPUT SPEED SENSOR SIGNAL
SPEED SENSOR GROUND
INPUT SPEED SENSOR
(8W-31-4)
1
T13 18 DG/VT
T13 18 DG/VT
S115
(8W-31-4)
K900 18 DB/DG
2.4L
3.3L/3.8L
S121
(8W-70-4)
K900 18 DB/DG
2.4L
3.3L/3.8L
S113
(8W-70-3)
S142
(8W-70-4)
K900 20 DB/DG
12 C100
K900 20 DB/DG
EXCEPT EXPORT
EXPORT
S374
(8W-70-3)
(8W-70-5)
K900 20 DB/DG
73 C200
K900 20 DB/DG
V37 20 VT
A
5.49K
0.47K
20.5K
1
2
B
LEFT SPEED CONTROL SWITCH
1 SET
2 ON/OFF
Z23 20 BK/VT
V37 20 VT
A
15.4K
1.2K
2.94K
1
2
3
B
RIGHT SPEED CONTROL SWITCH
1 RESUME/ACCEL
2 CANCEL
3 COAST
Z23 20 BK/VT
2 C3
CLOCKSPRING
5 C1
EATX
2.4L MTX

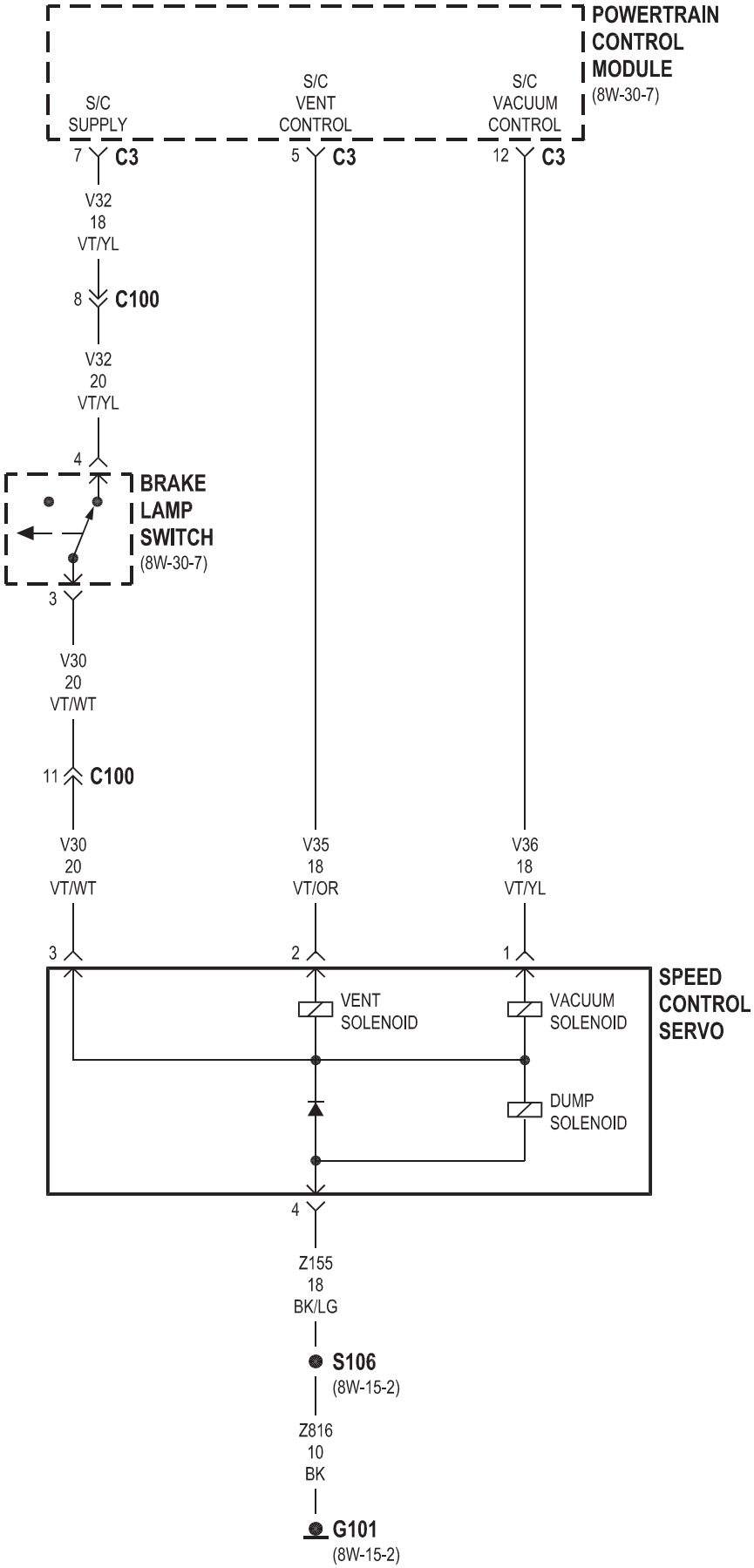
POWERTRAIN CONTROL MODULE
(8W-30-7)
S/C SUPPLY
S/C VENT CONTROL
S/C VACUUM CONTROL
7 C3
5 C3
12 C3
V32 18 VT/YL
8 C100
V32 20 VT/YL
4
BRAKE LAMP SWITCH
(8W-30-7)
3
V30 20 VT/WT
11 C100
V30 20 VT/WT
V35 18 VT/OR
V36 18 VT/YL
3
2
1
SPEED CONTROL SERVO
VENT SOLENOID
VACUUM SOLENOID
DUMP SOLENOID
4
Z155 18 BK/LG
S106
(8W-15-2)
Z816 10 BK
G101
(8W-15-2)

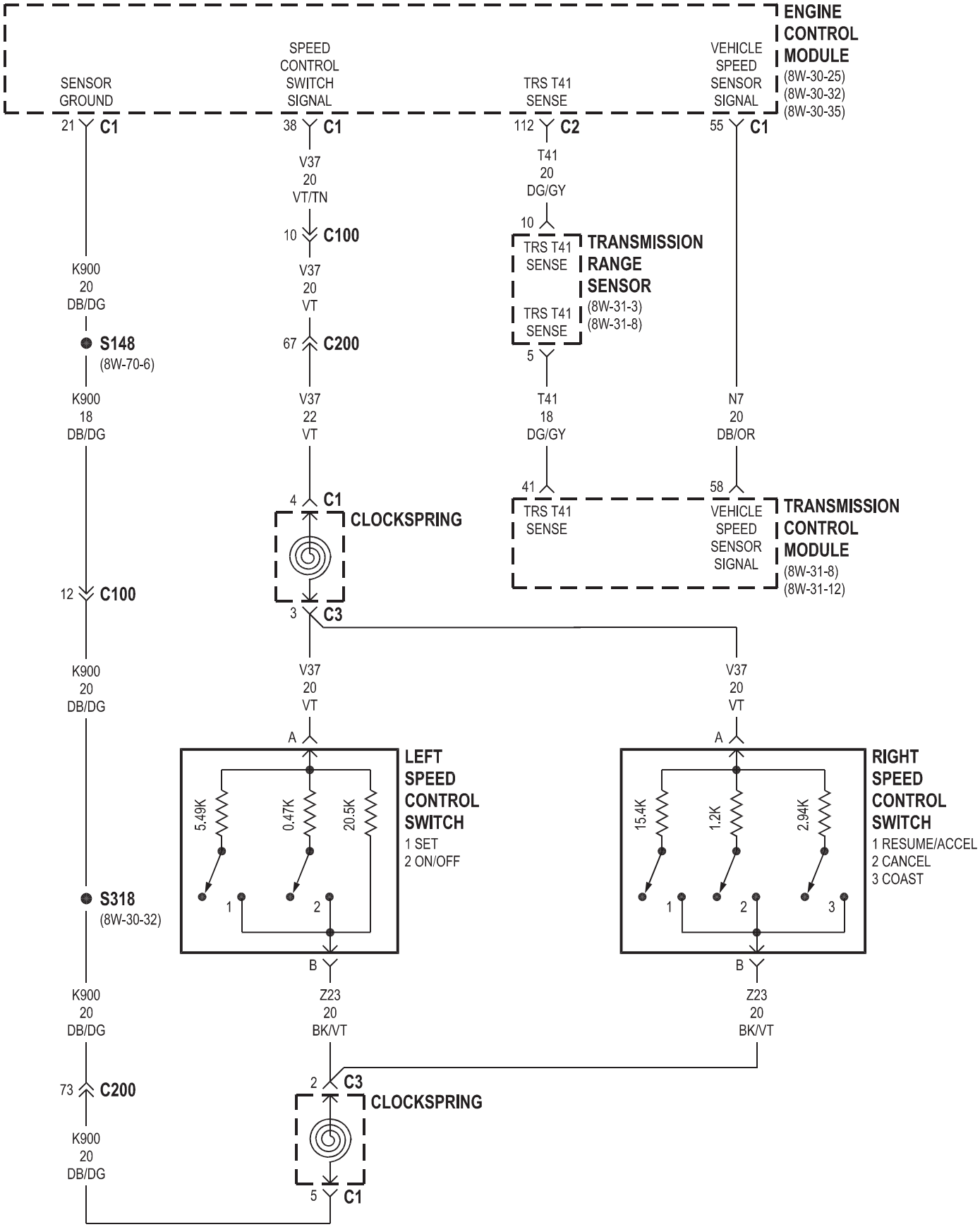
ENGINE CONTROL MODULE
(8W-30-25)
(8W-30-32)
(8W-30-35)
SENSOR GROUND
SPEED CONTROL SWITCH SIGNAL
TRS T41 SENSE
VEHICLE SPEED SENSOR SIGNAL
21 C1
38 C1
112 C2
55 C1
V37 20 VT/TN
T41 20 DG/GY
10 C100
10
TRS T41 SENSE
TRANSMISSION RANGE SENSOR
(8W-31-3)
(8W-31-8)
TRS T41 SENSE
K900 20 DB/DG
S148
(8W-70-6)
67 C200
5
V37 20 VT
K900 18 DB/DG
V37 22 VT
T41 18 DG/GY
N7 20 DB/OR
4 C1
CLOCKSPRING
41
58
TRS T41 SENSE
VEHICLE SPEED SENSOR SIGNAL
TRANSMISSION CONTROL MODULE
(8W-31-8)
(8W-31-12)
12 C100
3 C3
K900 20 DB/DG
V37 20 VT
V37 20 VT
A
A
LEFT SPEED CONTROL SWITCH
1 SET
2 ON/OFF
5.49K
0.47K
20.5K
15.4K
1.2K
2.94K
RIGHT SPEED CONTROL SWITCH
1 RESUME/ACCEL
2 CANCEL
3 COAST
1
2
1
2
3
S318
(8W-30-32)
B
B
K900 20 DB/DG
Z23 20 BK/VT
Z23 20 BK/VT
73 C200
2 C3
CLOCKSPRING
K900 20 DB/DG
5 C1

8W-35 ANTILOCK BRAKES

Component	Page
Body Control Module	8W-35-2
Brake Fluid Level Switch	8W-35-3
Brake Lamp Switch	8W-35-3
Clutch Pedal Interlock Switch	8W-35-3
Controller Antilock Brake	8W-35-2, 3, 4
Engine Control Module	8W-35-3
Front Control Module	8W-35-3
Fuse 9	8W-35-2
Fuse 21	8W-35-2
Fuse 26	8W-35-3
G100	8W-35-2
G200	8W-35-2
G300	8W-35-3
Integrated Power Module	8W-35-2, 3
Left Front Wheel Speed Sensor	8W-35-4
Left Rear Wheel Speed Sensor	8W-35-4
Powertrain Control Module	8W-35-3
Right Front Wheel Speed Sensor	8W-35-4
Right Rear Wheel Speed Sensor	8W-35-4
Traction Control Switch	8W-35-2
Transmission Control Module	8W-35-3

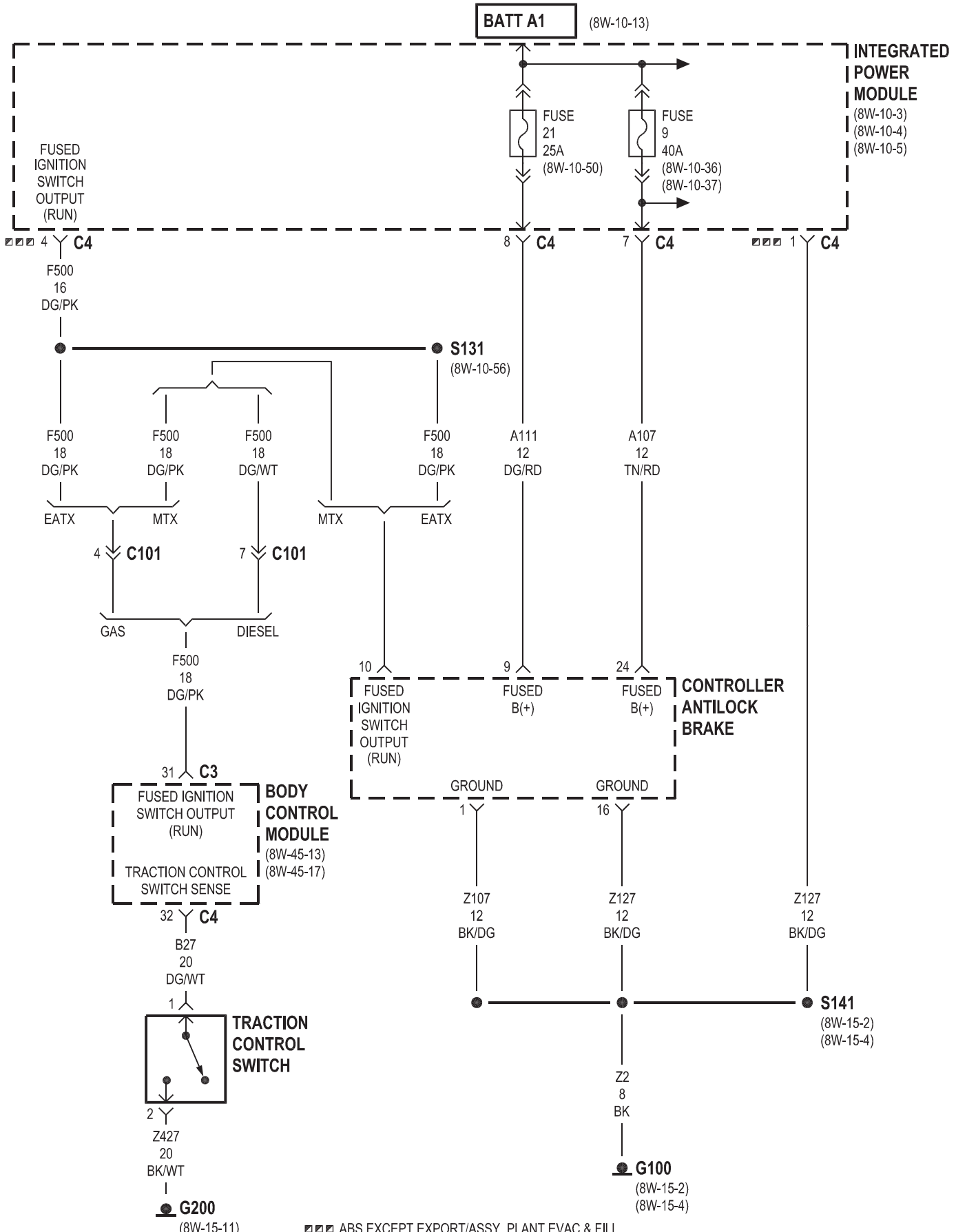
BATT A1
(8W-10-13)
INTEGRATED POWER MODULE
(8W-10-3)
(8W-10-4)
(8W-10-5)
FUSE 21 25A
(8W-10-50)
FUSE 9 40A
(8W-10-36)
(8W-10-37)
FUSED IGNITION SWITCH OUTPUT (RUN)
4 C4
8 C4
7 C4
1 C4
F500 16 DG/PK
S131
(8W-10-56)
F500 18 DG/PK
F500 18 DG/PK
F500 18 DG/WT
F500 18 DG/PK
A111 12 DG/RD
A107 12 TN/RD
EATX
MTX
MTX
EATX
4 C101
7 C101
GAS
DIESEL
F500 18 DG/PK
10
9
24
FUSED IGNITION SWITCH OUTPUT (RUN)
FUSED B(+)
FUSED B(+)
CONTROLLER ANTILOCK BRAKE
GROUND
GROUND
1
16
31 C3
FUSED IGNITION SWITCH OUTPUT (RUN)
TRACTION CONTROL SWITCH SENSE
BODY CONTROL MODULE
(8W-45-13)
(8W-45-17)
Z107 12 BK/DG
Z127 12 BK/DG
Z127 12 BK/DG
32 C4
B27 20 DG/WT
1
S141
(8W-15-2)
(8W-15-4)
TRACTION CONTROL SWITCH
Z2 8 BK
2
Z427 20 BK/WT
G100
(8W-15-2)
(8W-15-4)
G200
(8W-15-11)
ABS EXCEPT EXPORT/ASSY. PLANT EVAC & FILL

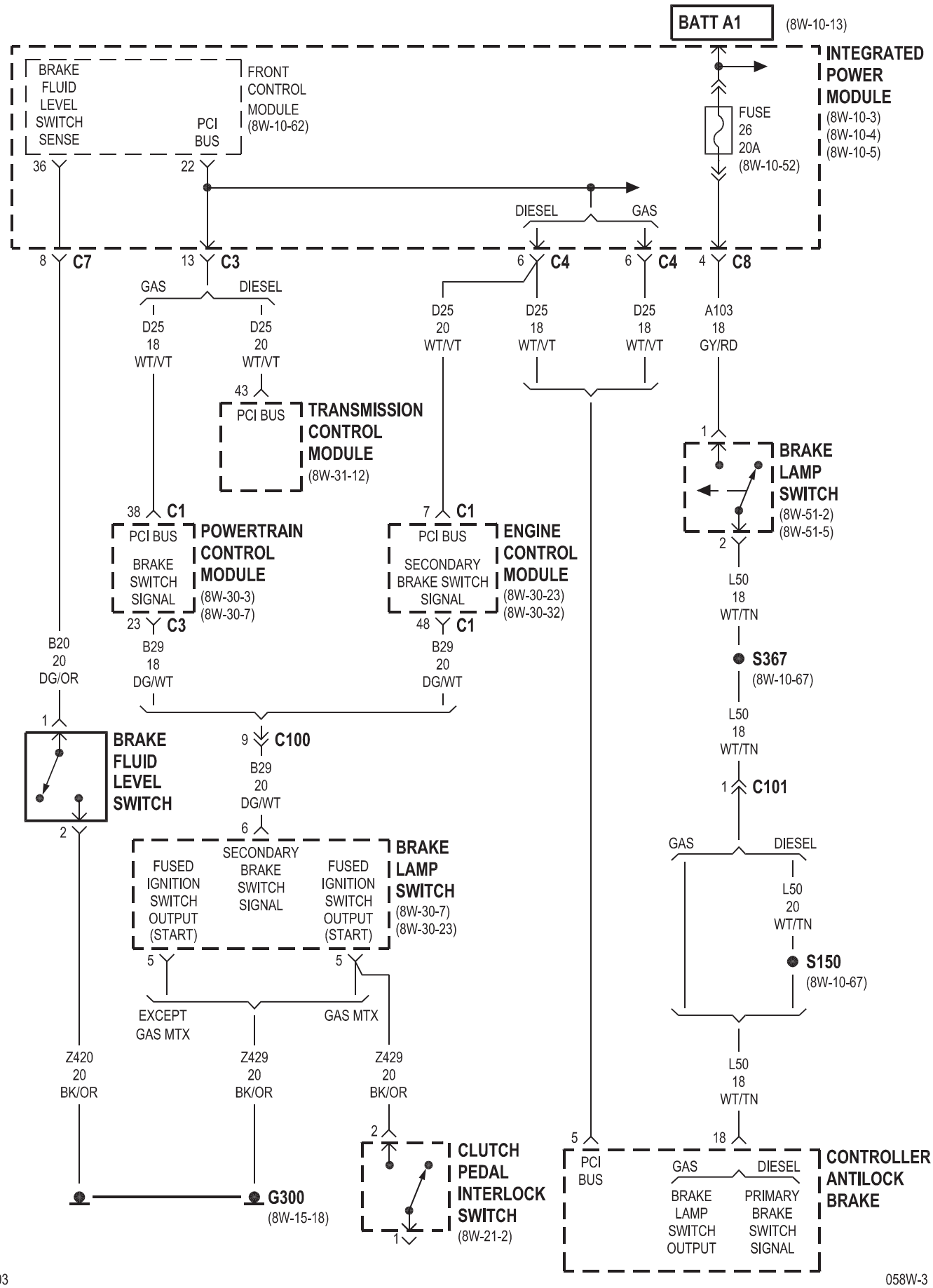
BATT A1
(8W-10-13)
INTEGRATED POWER MODULE
(8W-10-3)
(8W-10-4)
(8W-10-5)
FUSE 26 20A
(8W-10-52)
BRAKE FLUID LEVEL SWITCH SENSE
PCI BUS
FRONT CONTROL MODULE
(8W-10-62)
36
22
DIESEL
GAS
8 C7
13 C3
6 C4
6 C4
4 C8
GAS
DIESEL
D25 18 WT/VT
D25 20 WT/VT
D25 20 WT/VT
D25 18 WT/VT
D25 18 WT/VT
A103 18 GY/RD
43
PCI BUS
TRANSMISSION CONTROL MODULE
(8W-31-12)
1
BRAKE LAMP SWITCH
(8W-51-2)
(8W-51-5)
2
38 C1
PCI BUS
BRAKE SWITCH SIGNAL
POWERTRAIN CONTROL MODULE
(8W-30-3)
(8W-30-7)
7 C1
PCI BUS
SECONDARY BRAKE SWITCH SIGNAL
ENGINE CONTROL MODULE
(8W-30-23)
(8W-30-32)
23 C3
48 C1
L50 18 WT/TN
B20 20 DG/OR
B29 18 DG/WT
B29 20 DG/WT
S367
(8W-10-67)
L50 18 WT/TN
1
BRAKE FLUID LEVEL SWITCH
2
9 C100
B29 20 DG/WT
1 C101
6
GAS
DIESEL
FUSED IGNITION SWITCH OUTPUT (START)
SECONDARY BRAKE SWITCH SIGNAL
FUSED IGNITION SWITCH OUTPUT (START)
BRAKE LAMP SWITCH
(8W-30-7)
(8W-30-23)
L50 20 WT/TN
S150
(8W-10-67)
5
5
EXCEPT GAS MTX
GAS MTX
L50 18 WT/TN
Z420 20 BK/OR
Z429 20 BK/OR
Z429 20 BK/OR
18
2
5
PCI BUS
GAS
DIESEL
BRAKE LAMP SWITCH OUTPUT
PRIMARY BRAKE SWITCH SIGNAL
CONTROLLER ANTILOCK BRAKE
G300
(8W-15-18)
CLUTCH PEDAL INTERLOCK SWITCH
(8W-21-2)
1

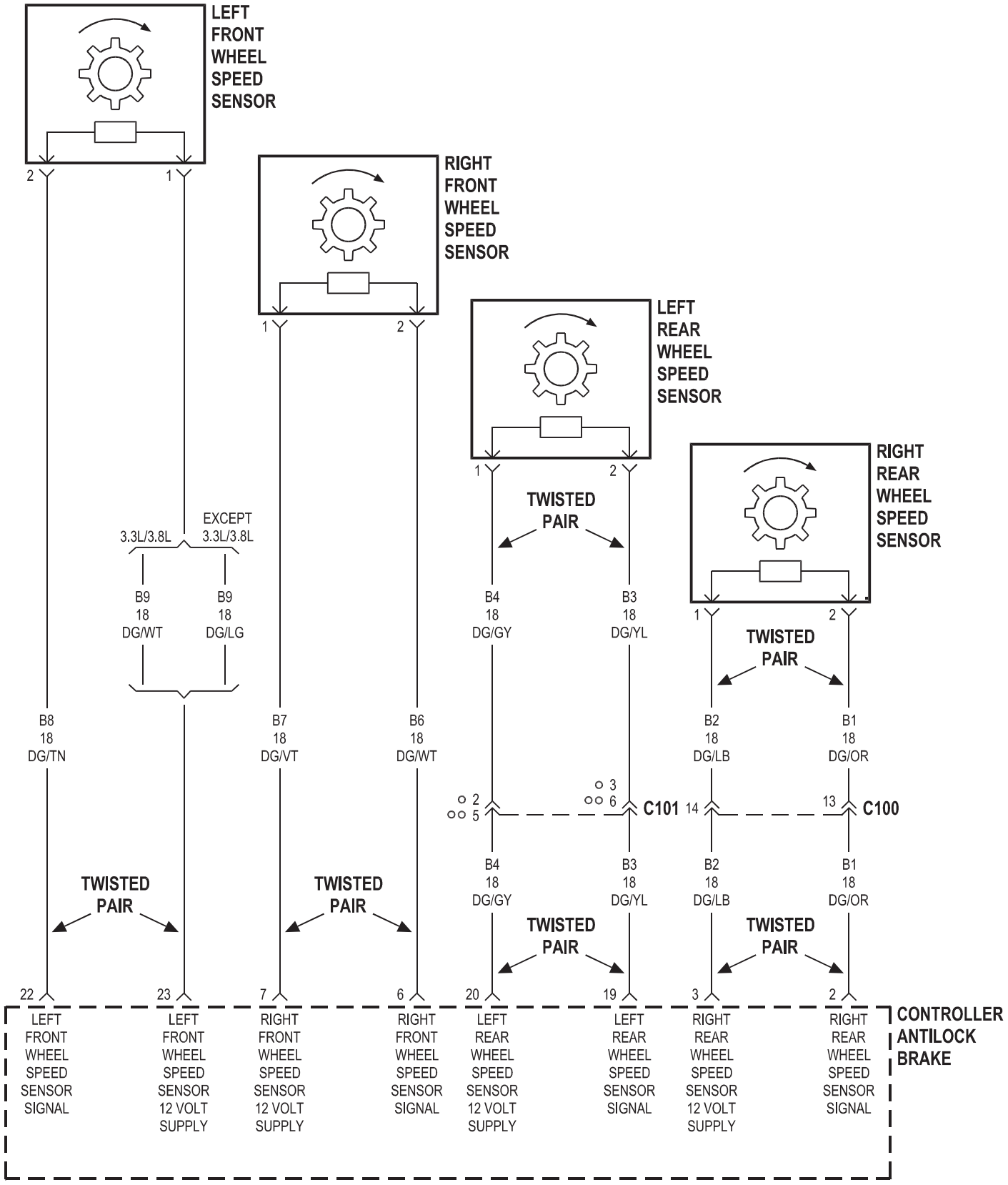
LEFT FRONT WHEEL SPEED SENSOR
RIGHT FRONT WHEEL SPEED SENSOR
LEFT REAR WHEEL SPEED SENSOR
RIGHT REAR WHEEL SPEED SENSOR
2
1
1
2
1
2
1
2
EXCEPT 3.3L/3.8L
3.3L/3.8L
B9 18 DG/WT
B9 18 DG/LG
TWISTED PAIR
B4 18 DG/GY
B3 18 DG/YL
TWISTED PAIR
B8 18 DG/TN
B7 18 DG/VT
B6 18 DG/WT
B2 18 DG/LB
B1 18 DG/OR
2
5
3
6
C101
14
13
C100
B4 18 DG/GY
B3 18 DG/YL
B2 18 DG/LB
B1 18 DG/OR
TWISTED PAIR
TWISTED PAIR
TWISTED PAIR
TWISTED PAIR
22
23
7
6
20
19
3
2
LEFT FRONT WHEEL SPEED SENSOR SIGNAL
LEFT FRONT WHEEL SPEED SENSOR 12 VOLT SUPPLY
RIGHT FRONT WHEEL SPEED SENSOR 12 VOLT SUPPLY
RIGHT FRONT WHEEL SPEED SENSOR SIGNAL
LEFT REAR WHEEL SPEED SENSOR 12 VOLT SUPPLY
LEFT REAR WHEEL SPEED SENSOR SIGNAL
RIGHT REAR WHEEL SPEED SENSOR 12 VOLT SUPPLY
RIGHT REAR WHEEL SPEED SENSOR SIGNAL
CONTROLLER ANTILOCK BRAKE
GAS
DIESEL

8W-39 VEHICLE THEFT SECURITY SYSTEM

Component	Page
Body Control Module	8W-39-2, 3, 6, 7, 8, 9, 10, 11, 12, 13
Clockspring	8W-39-5
Driver Door Lock Switch	8W-39-11, 12
Front Control Module	8W-39-2, 3, 5
Front Intrusion Sensor	8W-39-4
Fuse 8	8W-39-5
Fuse 14	8W-39-2
G102	8W-39-5
G200	8W-39-2, 3, 5
G300	8W-39-6, 7, 8, 10, 11, 12, 13
G301	8W-39-6, 7, 8, 10, 11, 12
G302	8W-39-13
G303	8W-39-13
High Note Horn	8W-39-5
Hood Ajar Switch	8W-39-13
Horn Relay	8W-39-5
Horn Switch	8W-39-5
Ignition Switch	8W-39-2, 3
Integrated Power Module	8W-39-2, 3, 5
Left Cylinder Lock Switch	8W-39-11, 12
Left Front Door Ajar Switch	8W-39-6
Left Front Door Lock Motor/Ajar Switch	8W-39-6, 7
Left Sliding Door Control Module	8W-39-8, 9
Left Sliding Door Latch Sensing Switch	8W-39-8
Left Sliding Door Lock Motor	8W-39-9
Left Sliding Door Lock Motor/Ajar Switch	8W-39-10
Liftgate Ajar Switch	8W-39-13
Liftgate Cinch/Release Motor	8W-39-13
Passenger Door Lock Switch	8W-39-11, 12
Power Liftgate Module	8W-39-13
Rear Intrusion Sensor	8W-39-4
Right Cylinder Lock Switch	8W-39-11, 12
Right Front Door Ajar Switch	8W-39-6
Right Front Door Lock Motor/Ajar Switch	8W-39-6, 7
Right Sliding Door Control Module	8W-39-8, 9
Right Sliding Door Latch Sensing Switch	8W-39-8
Right Sliding Door Lock Motor	8W-39-9
Right Sliding Door Lock Motor/Ajar Switch	8W-39-10
Sentry Key Remote Entry Module	8W-39-2
Siren	8W-39-3
Thatcham Alarm Indicator	8W-39-4
Thatcham Alarm Module	8W-39-3, 4

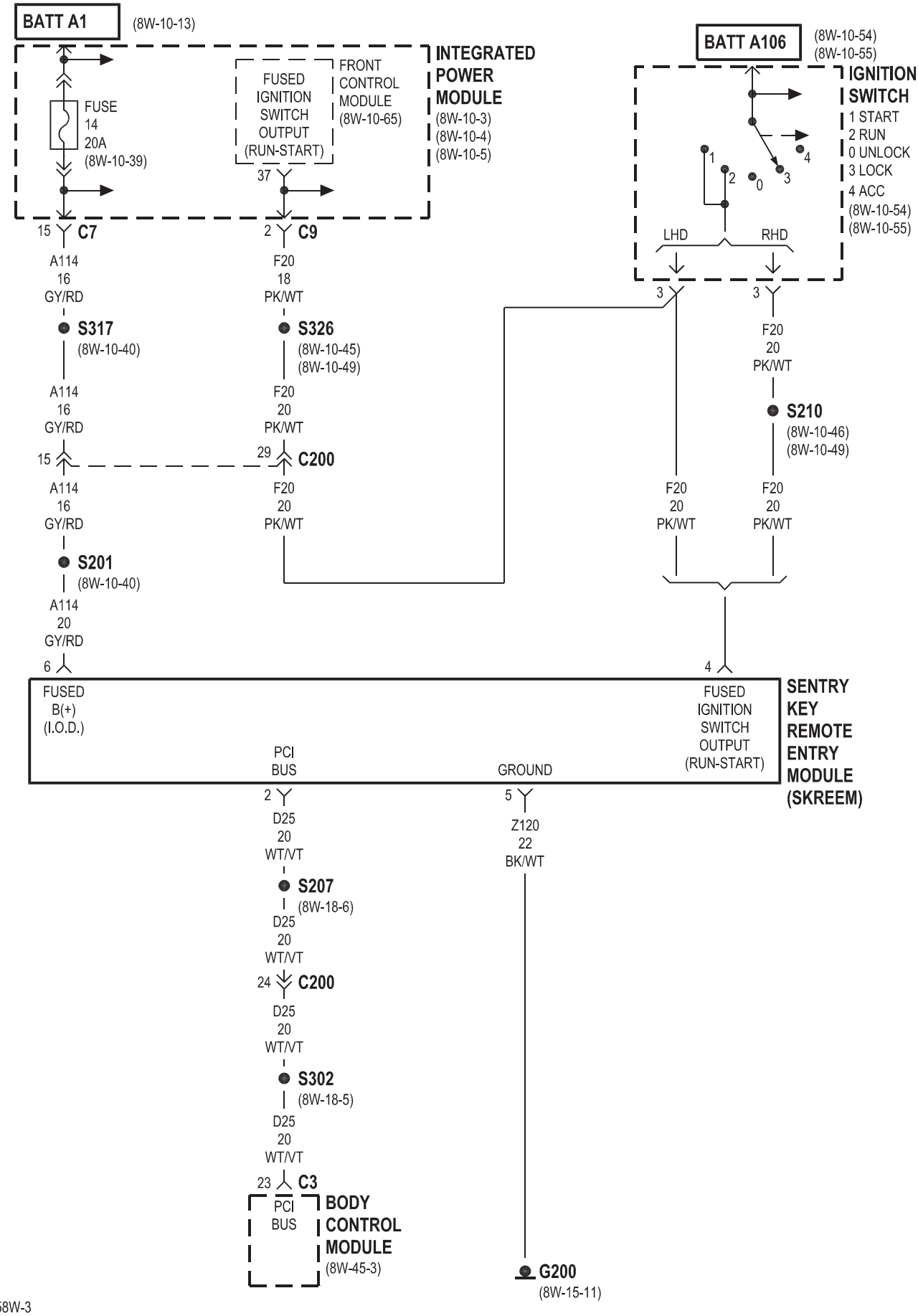
BATT A1
(8W-10-13)
FUSE
14
20A
(8W-10-39)
FUSED
IGNITION
SWITCH
OUTPUT
(RUN-START)
FRONT
CONTROL
MODULE
(8W-10-65)
INTEGRATED
POWER
MODULE
(8W-10-3)
(8W-10-4)
(8W-10-5)
BATT A106
(8W-10-54)
(8W-10-55)
IGNITION
SWITCH
1 START
2 RUN
0 UNLOCK
3 LOCK
4 ACC
(8W-10-54)
(8W-10-55)
LHD
RHD
15 C7
A114
16
GY/RD
S317
(8W-10-40)
A114
16
GY/RD
15
A114
16
GY/RD
S201
(8W-10-40)
A114
20
GY/RD
6
FUSED
B(+)
(I.O.D.)
2 C9
F20
18
PK/WT
S326
(8W-10-45)
(8W-10-49)
F20
20
PK/WT
29 C200
F20
20
PK/WT
3
3
F20
20
PK/WT
S210
(8W-10-46)
(8W-10-49)
F20
20
PK/WT
F20
20
PK/WT
4
FUSED
IGNITION
SWITCH
OUTPUT
(RUN-START)
SENTRY
KEY
REMOTE
ENTRY
MODULE
(SKREEM)
PCI
BUS
GROUND
2
D25
20
WT/VT
S207
(8W-18-6)
D25
20
WT/VT
24 C200
D25
20
WT/VT
S302
(8W-18-5)
D25
20
WT/VT
23 C3
PCI
BUS
BODY
CONTROL
MODULE
(8W-45-3)
5
Z120
22
BK/WT
G200
(8W-15-11)

UNITED KINGDOM

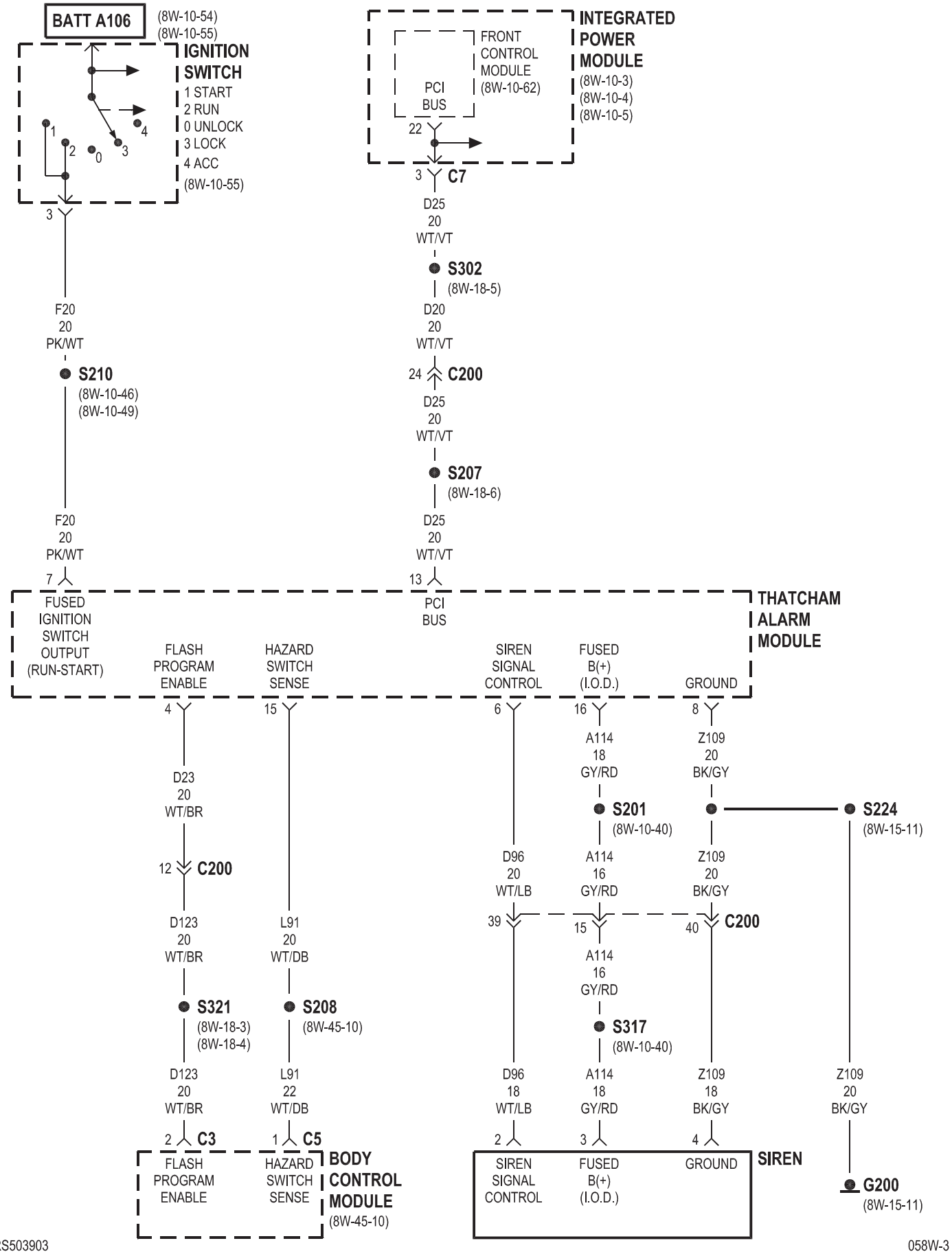

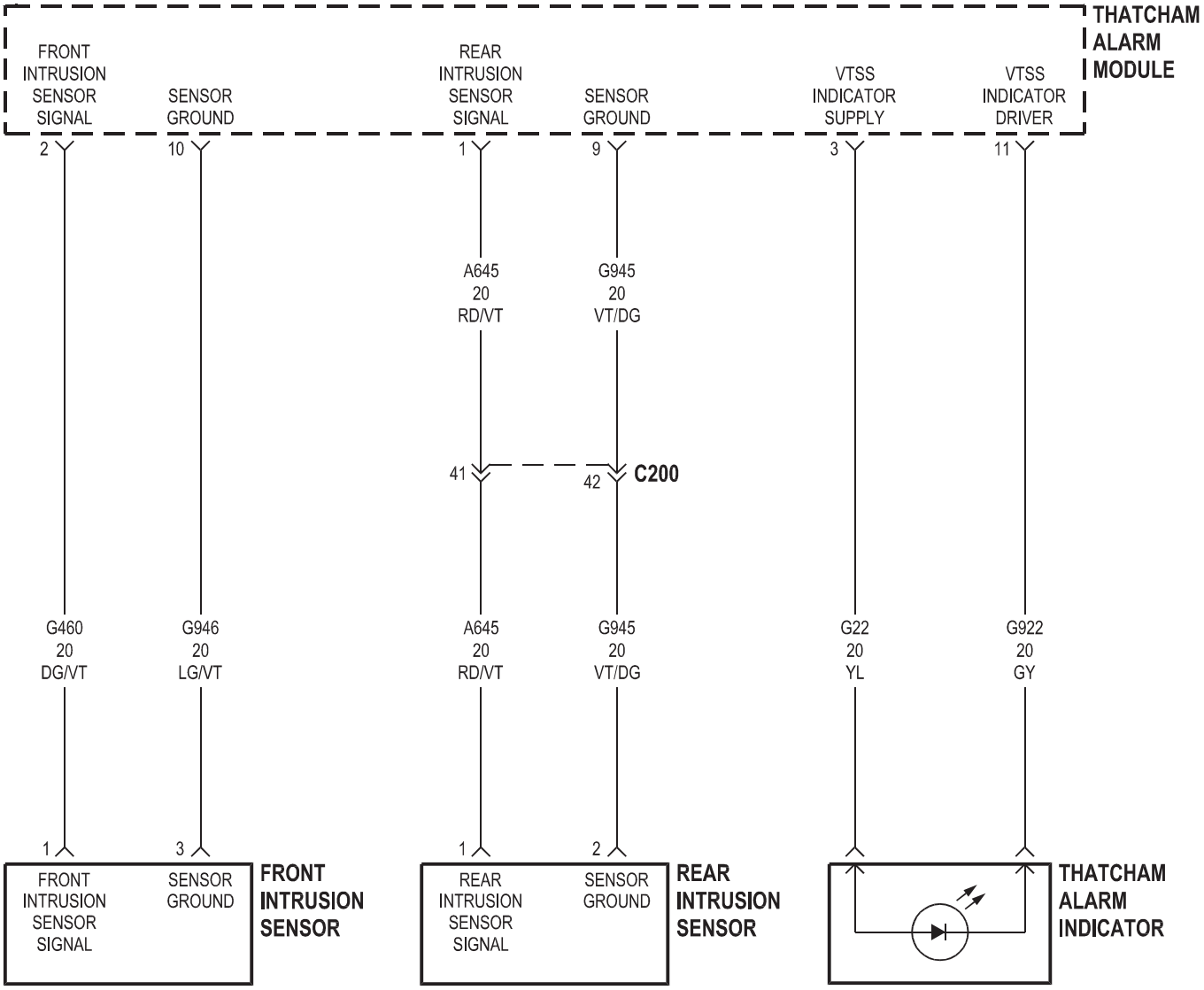
THATCHAM ALARM MODULE
FRONT INTRUSION SENSOR SIGNAL
SENSOR GROUND
REAR INTRUSION SENSOR SIGNAL
SENSOR GROUND
VTSS INDICATOR SUPPLY
VTSS INDICATOR DRIVER
2
10
1
9
3
11
A645 20 RD/VT
G945 20 VT/DG
41
42
C200
G460 20 DG/VT
G946 20 LG/VT
A645 20 RD/VT
G945 20 VT/DG
G22 20 YL
G922 20 GY
1
3
1
2
FRONT INTRUSION SENSOR SIGNAL
SENSOR GROUND
FRONT INTRUSION SENSOR
REAR INTRUSION SENSOR SIGNAL
SENSOR GROUND
REAR INTRUSION SENSOR
THATCHAM ALARM INDICATOR

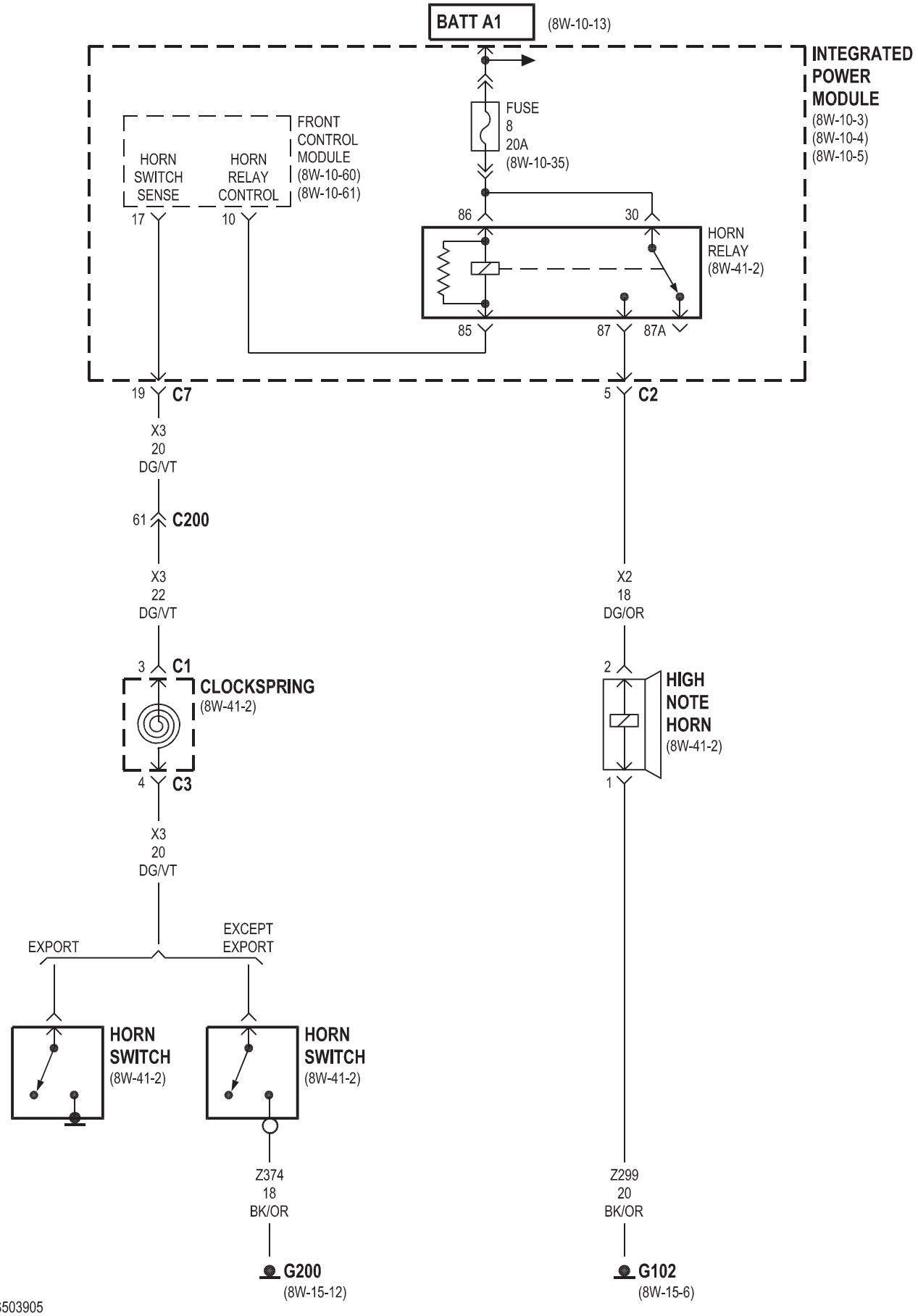
BATT A1
(8W-10-13)
INTEGRATED POWER MODULE
(8W-10-3)
(8W-10-4)
(8W-10-5)
FUSE 8 20A
(8W-10-35)
FRONT CONTROL MODULE
(8W-10-60)
(8W-10-61)
HORN SWITCH SENSE
HORN RELAY CONTROL
17
10
86
30
85
87
87A
HORN RELAY
(8W-41-2)
19 C7
5 C2
X3 20 DG/VT
61 C200
X3 22 DG/VT
3 C1
CLOCKSPRING
(8W-41-2)
4 C3
X3 20 DG/VT
X2 18 DG/OR
2
1
HIGH NOTE HORN
(8W-41-2)
EXPORT
EXCEPT EXPORT
HORN SWITCH
(8W-41-2)
HORN SWITCH
(8W-41-2)
Z374 18 BK/OR
Z299 20 BK/OR
G200
(8W-15-12)
G102
(8W-15-6)

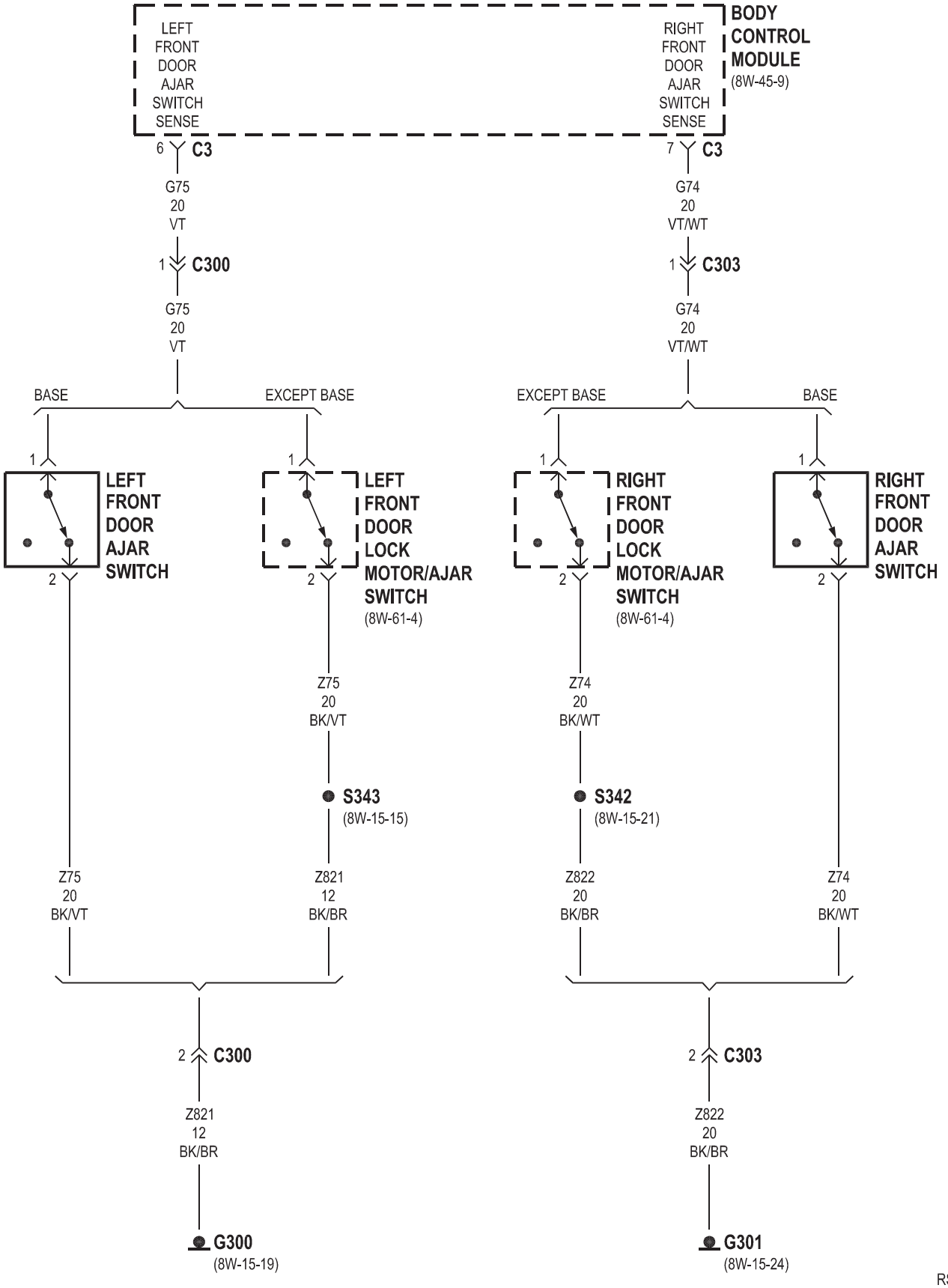
LEFT FRONT DOOR AJAR SWITCH SENSE
RIGHT FRONT DOOR AJAR SWITCH SENSE
BODY CONTROL MODULE
(8W-45-9)
6 C3
7 C3
G75 20 VT
G74 20 VT/WT
1 C300
1 C303
G75 20 VT
G74 20 VT/WT
BASE
EXCEPT BASE
EXCEPT BASE
BASE
LEFT FRONT DOOR AJAR SWITCH
LEFT FRONT DOOR LOCK MOTOR/AJAR SWITCH
(8W-61-4)
RIGHT FRONT DOOR LOCK MOTOR/AJAR SWITCH
(8W-61-4)
RIGHT FRONT DOOR AJAR SWITCH
Z75 20 BK/VT
Z74 20 BK/WT
S343
(8W-15-15)
S342
(8W-15-21)
Z75 20 BK/VT
Z821 12 BK/BR
Z822 20 BK/BR
Z74 20 BK/WT
2 C300
2 C303
Z821 12 BK/BR
Z822 20 BK/BR
G300
(8W-15-19)
G301
(8W-15-24)

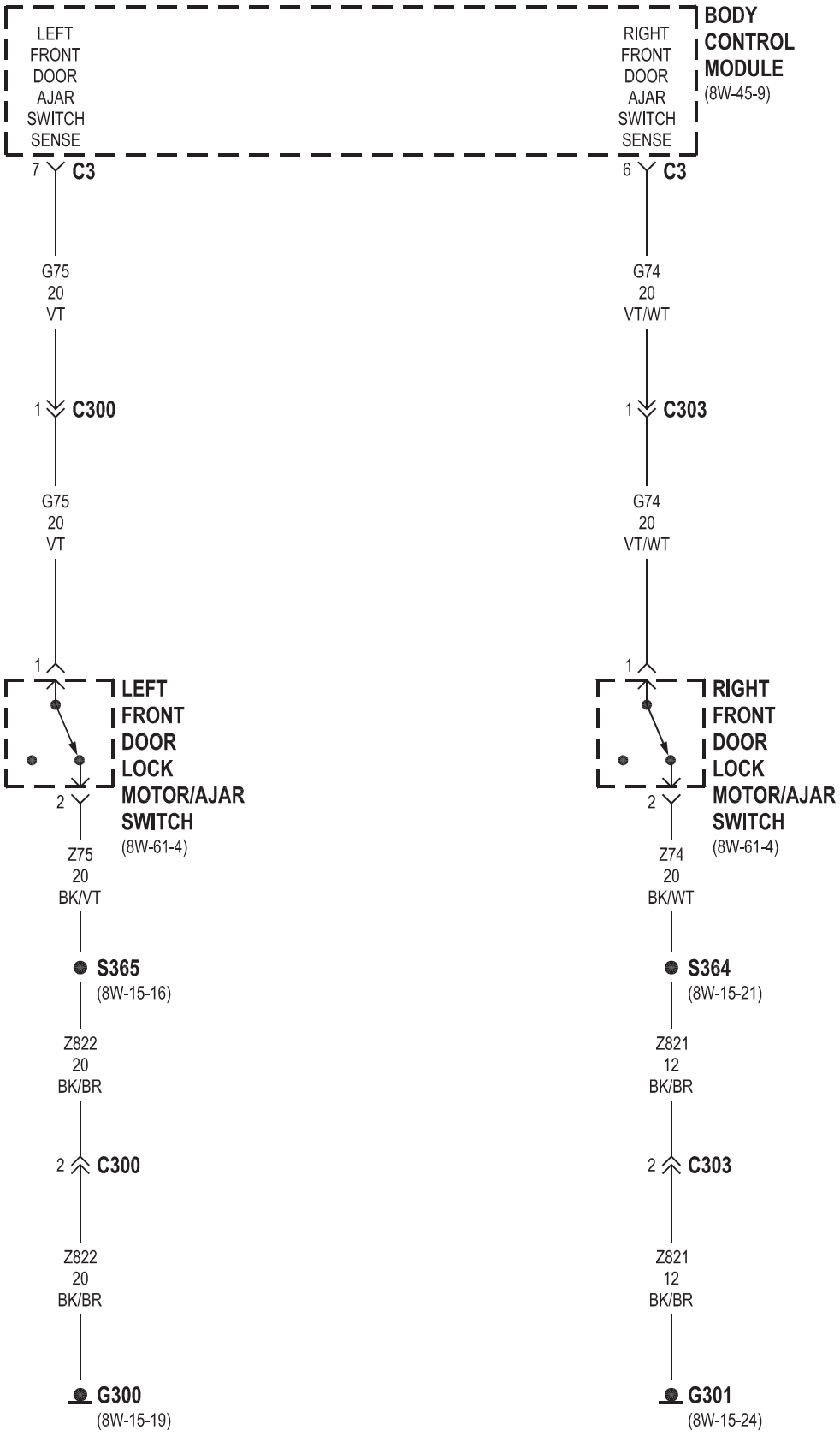
LEFT FRONT DOOR AJAR SWITCH SENSE
RIGHT FRONT DOOR AJAR SWITCH SENSE
BODY CONTROL MODULE
(8W-45-9)
7 C3
6 C3
G75 20 VT
G74 20 VT/WT
1 C300
1 C303
G75 20 VT
G74 20 VT/WT
1
1
LEFT FRONT DOOR LOCK MOTOR/AJAR SWITCH
(8W-61-4)
RIGHT FRONT DOOR LOCK MOTOR/AJAR SWITCH
(8W-61-4)
2
2
Z75 20 BK/VT
Z74 20 BK/WT
S365
(8W-15-16)
S364
(8W-15-21)
Z822 20 BK/BR
Z821 12 BK/BR
2 C300
2 C303
Z822 20 BK/BR
Z821 12 BK/BR
G300
(8W-15-19)
G301
(8W-15-24)

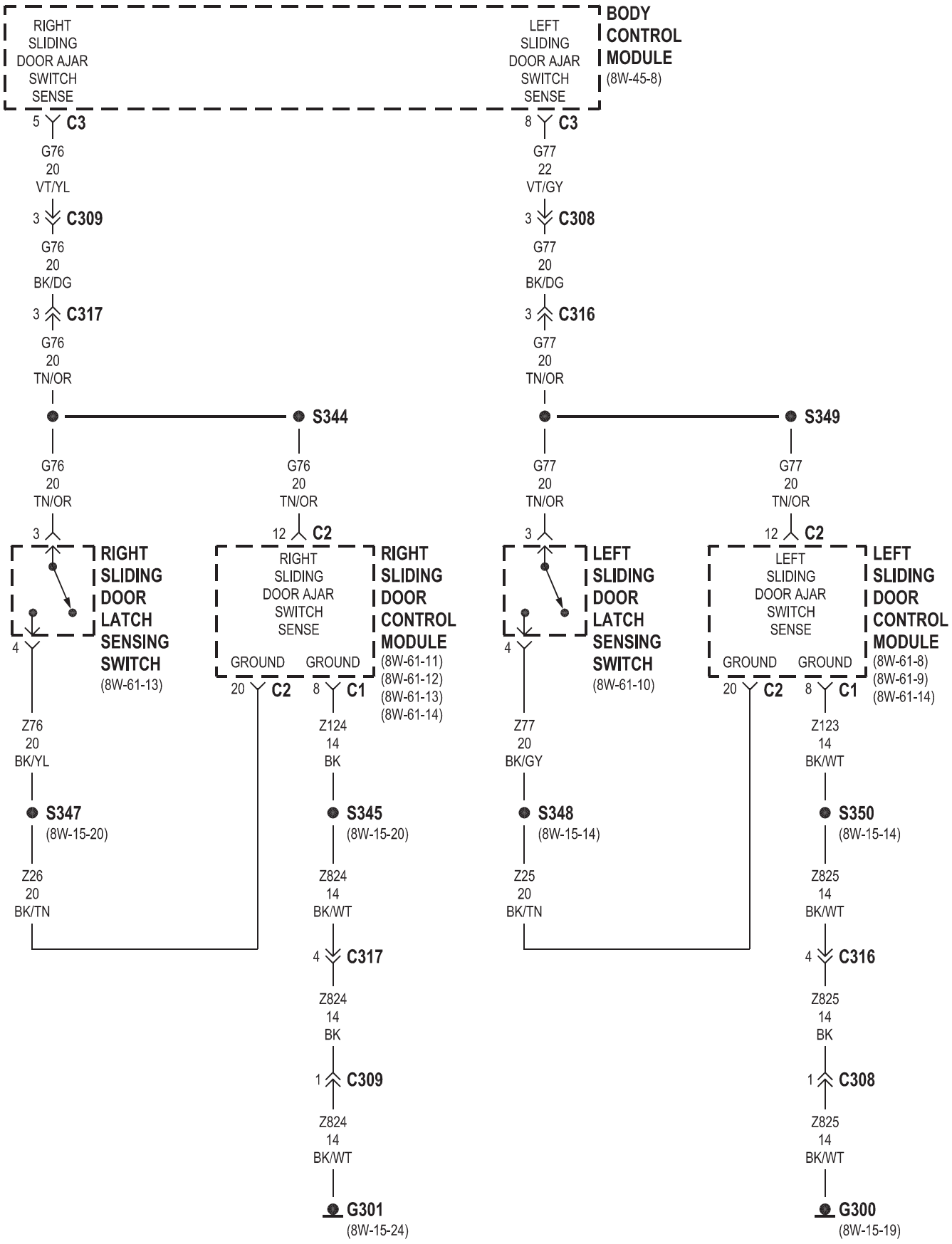
RIGHT SLIDING DOOR AJAR SWITCH SENSE
LEFT SLIDING DOOR AJAR SWITCH SENSE
BODY CONTROL MODULE
(8W-45-8)
5 C3
8 C3
G76 20 VT/YL
G77 22 VT/GY
3 C309
3 C308
G76 20 BK/DG
G77 20 BK/DG
3 C317
3 C316
G76 20 TN/OR
G77 20 TN/OR
S344
S349
G76 20 TN/OR
G77 20 TN/OR
3
12 C2
RIGHT SLIDING DOOR LATCH SENSING SWITCH
(8W-61-13)
RIGHT SLIDING DOOR AJAR SWITCH SENSE
GROUND GROUND
RIGHT SLIDING DOOR CONTROL MODULE
(8W-61-11)
(8W-61-12)
(8W-61-13)
(8W-61-14)
LEFT SLIDING DOOR LATCH SENSING SWITCH
(8W-61-10)
LEFT SLIDING DOOR AJAR SWITCH SENSE
LEFT SLIDING DOOR CONTROL MODULE
(8W-61-8)
(8W-61-9)
(8W-61-14)
4
20 C2
8 C1
Z76 20 BK/YL
Z124 14 BK
Z77 20 BK/GY
Z123 14 BK/WT
S347
(8W-15-20)
S345
(8W-15-20)
S348
(8W-15-14)
S350
(8W-15-14)
Z26 20 BK/TN
Z824 14 BK/WT
Z25 20 BK/TN
Z825 14 BK/WT
4 C317
4 C316
Z824 14 BK
Z825 14 BK
1 C309
1 C308
Z824 14 BK/WT
Z825 14 BK/WT
G301
(8W-15-24)
G300
(8W-15-19)

POWER SLIDING DOORS

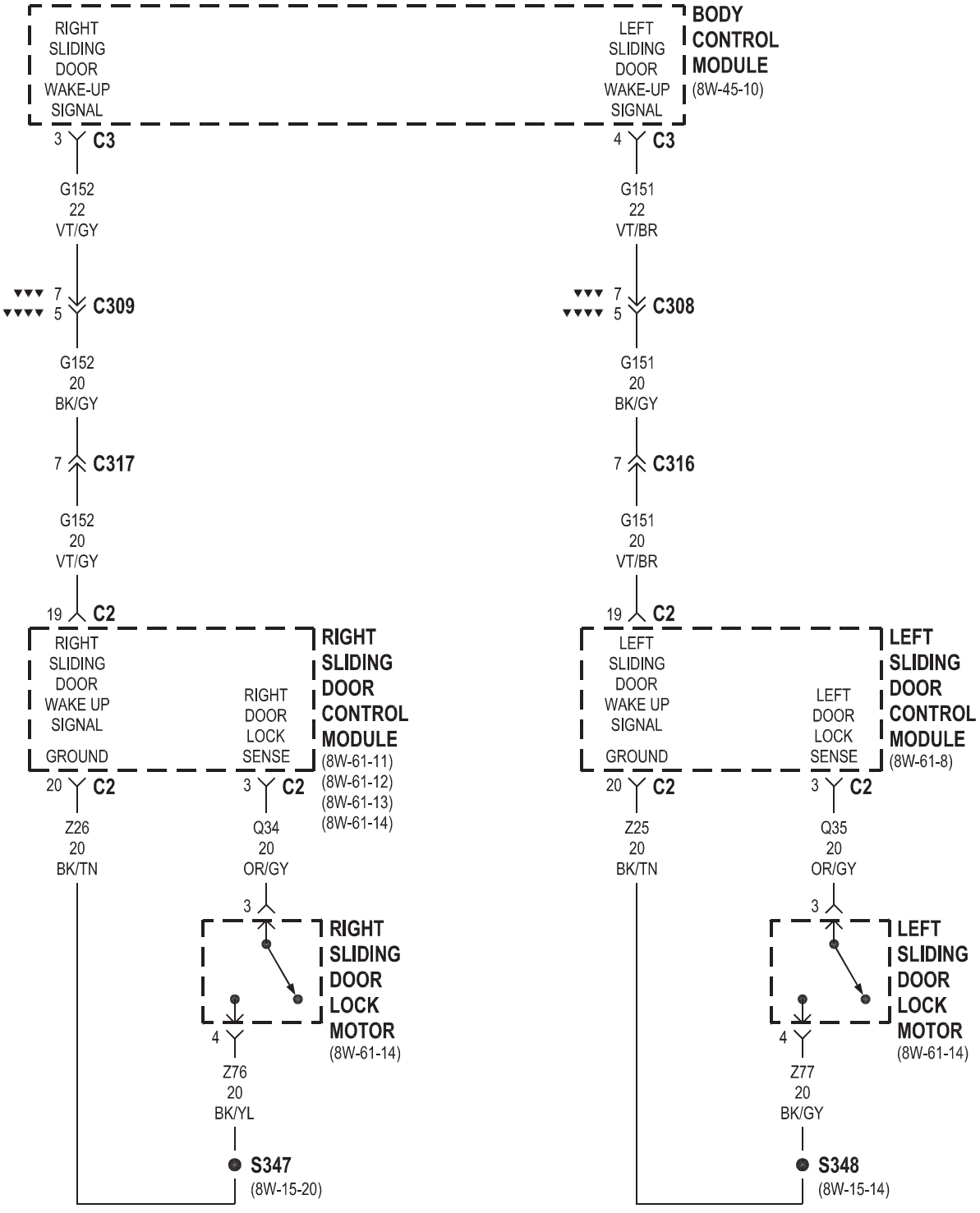

▼▼▼ SIDE AIRBAG
▼▼▼▼ EXCEPT SIDE AIRBAG

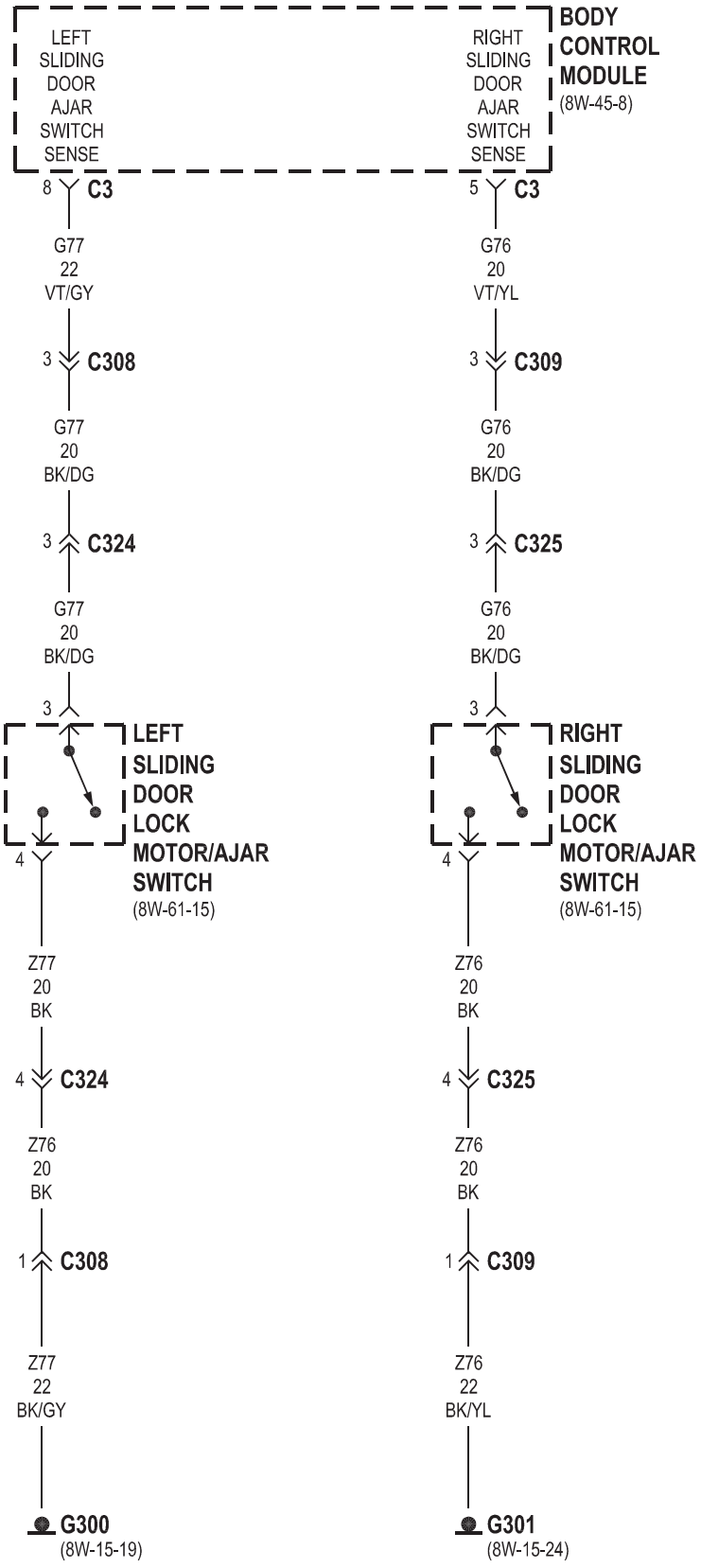
LEFT SLIDING DOOR AJAR SWITCH SENSE
RIGHT SLIDING DOOR AJAR SWITCH SENSE
BODY CONTROL MODULE
(8W-45-8)
8 C3
5 C3
G77 22 VT/GY
G76 20 VT/YL
3 C308
3 C309
G77 20 BK/DG
G76 20 BK/DG
3 C324
3 C325
G77 20 BK/DG
G76 20 BK/DG
3
3
LEFT SLIDING DOOR LOCK MOTOR/AJAR SWITCH
(8W-61-15)
RIGHT SLIDING DOOR LOCK MOTOR/AJAR SWITCH
(8W-61-15)
4
4
Z77 20 BK
Z76 20 BK
4 C324
4 C325
Z76 20 BK
Z76 20 BK
1 C308
1 C309
Z77 22 BK/GY
Z76 22 BK/YL
G300
(8W-15-19)
G301
(8W-15-24)

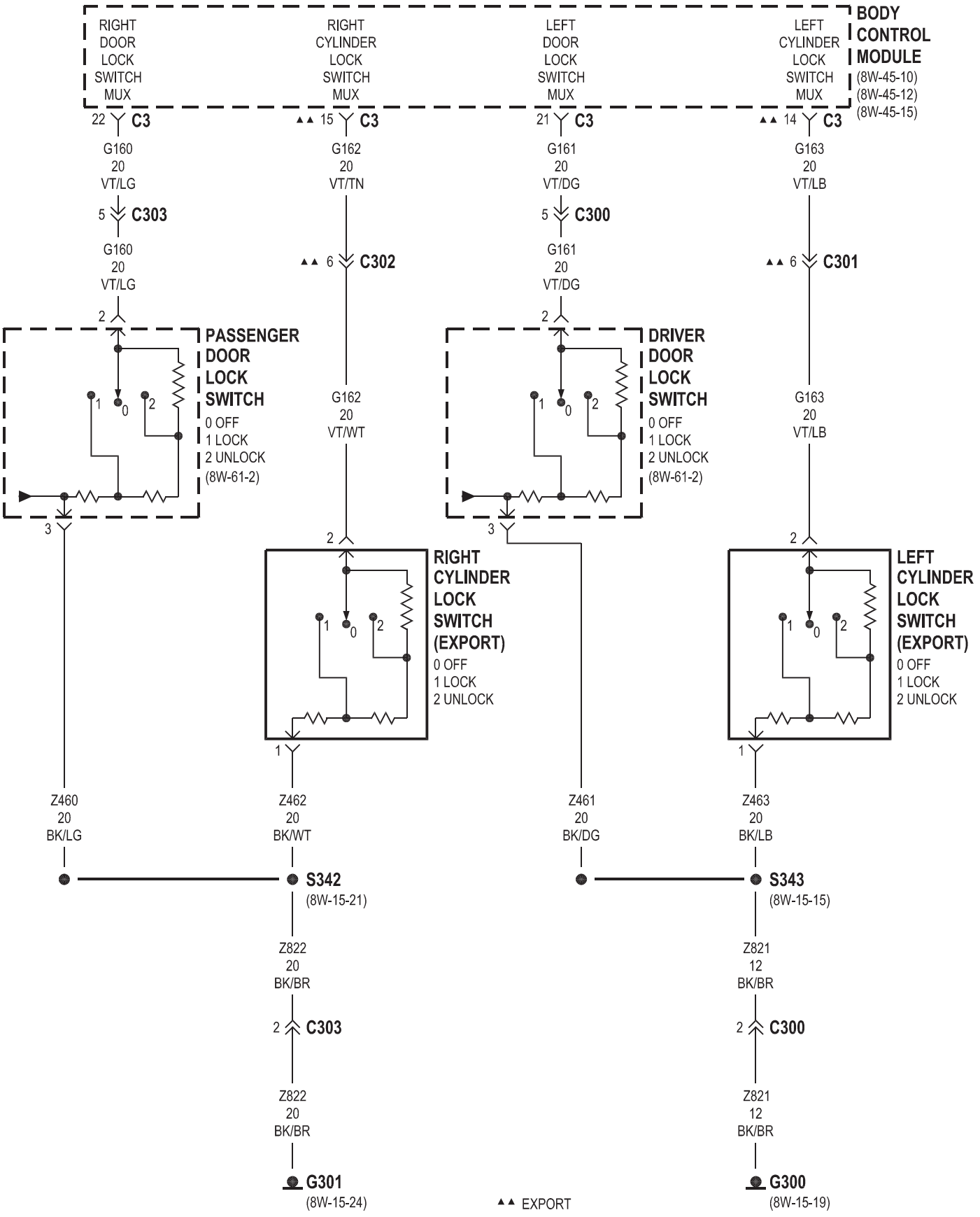
RIGHT DOOR LOCK SWITCH MUX
RIGHT CYLINDER LOCK SWITCH MUX
LEFT DOOR LOCK SWITCH MUX
LEFT CYLINDER LOCK SWITCH MUX
BODY CONTROL MODULE
(8W-45-10)
(8W-45-12)
(8W-45-15)
22 C3
▲▲ 15 C3
21 C3
▲▲ 14 C3
G160 20 VT/LG
5 C303
G160 20 VT/LG
2
G162 20 VT/TN
▲▲ 6 C302
G161 20 VT/DG
5 C300
G161 20 VT/DG
2
G163 20 VT/LB
▲▲ 6 C301
PASSENGER DOOR LOCK SWITCH
0 OFF
1 LOCK
2 UNLOCK
(8W-61-2)
DRIVER DOOR LOCK SWITCH
0 OFF
1 LOCK
2 UNLOCK
(8W-61-2)
G162 20 VT/WT
G163 20 VT/LB
3
2
RIGHT CYLINDER LOCK SWITCH (EXPORT)
0 OFF
1 LOCK
2 UNLOCK
LEFT CYLINDER LOCK SWITCH (EXPORT)
0 OFF
1 LOCK
2 UNLOCK
1
Z460 20 BK/LG
Z462 20 BK/WT
Z461 20 BK/DG
Z463 20 BK/LB
S342
(8W-15-21)
S343
(8W-15-15)
Z822 20 BK/BR
Z821 12 BK/BR
2 C303
2 C300
Z822 20 BK/BR
Z821 12 BK/BR
G301
(8W-15-24)
G300
(8W-15-19)
▲▲ EXPORT

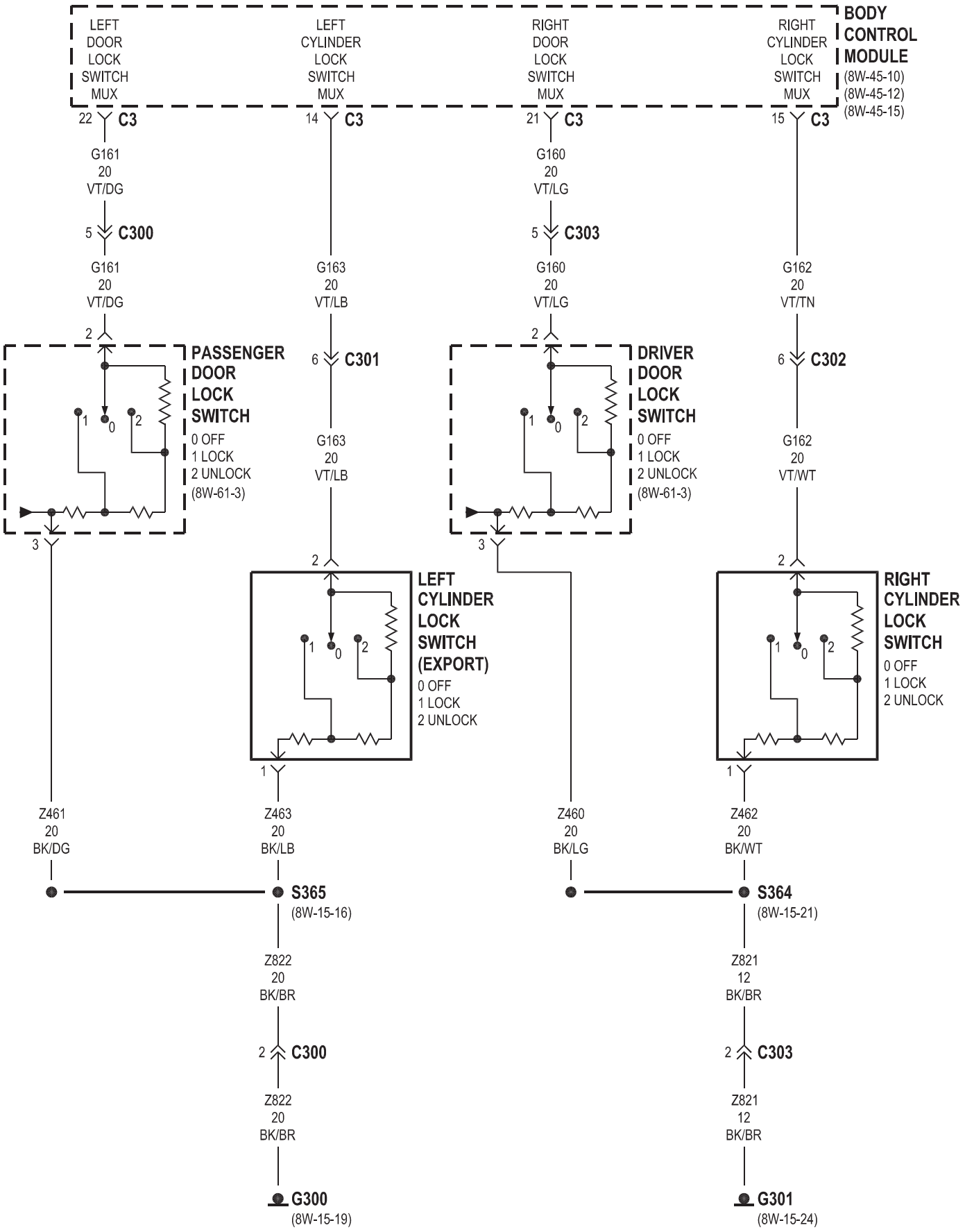
BODY CONTROL MODULE
(8W-45-10)
(8W-45-12)
(8W-45-15)
LEFT DOOR LOCK SWITCH MUX
LEFT CYLINDER LOCK SWITCH MUX
RIGHT DOOR LOCK SWITCH MUX
RIGHT CYLINDER LOCK SWITCH MUX
22 C3
14 C3
21 C3
15 C3
G161 20 VT/DG
5 C300
G161 20 VT/DG
2
G163 20 VT/LB
6 C301
G163 20 VT/LB
2
G160 20 VT/LG
5 C303
G160 20 VT/LG
2
G162 20 VT/TN
6 C302
G162 20 VT/WT
2
PASSENGER DOOR LOCK SWITCH
0 OFF
1 LOCK
2 UNLOCK
(8W-61-3)
DRIVER DOOR LOCK SWITCH
0 OFF
1 LOCK
2 UNLOCK
(8W-61-3)
LEFT CYLINDER LOCK SWITCH (EXPORT)
0 OFF
1 LOCK
2 UNLOCK
RIGHT CYLINDER LOCK SWITCH
0 OFF
1 LOCK
2 UNLOCK
3
2
3
2
1
1
Z461 20 BK/DG
Z463 20 BK/LB
Z460 20 BK/LG
Z462 20 BK/WT
S365
(8W-15-16)
S364
(8W-15-21)
Z822 20 BK/BR
Z821 12 BK/BR
2 C300
2 C303
Z822 20 BK/BR
Z821 12 BK/BR
G300
(8W-15-19)
G301
(8W-15-24)

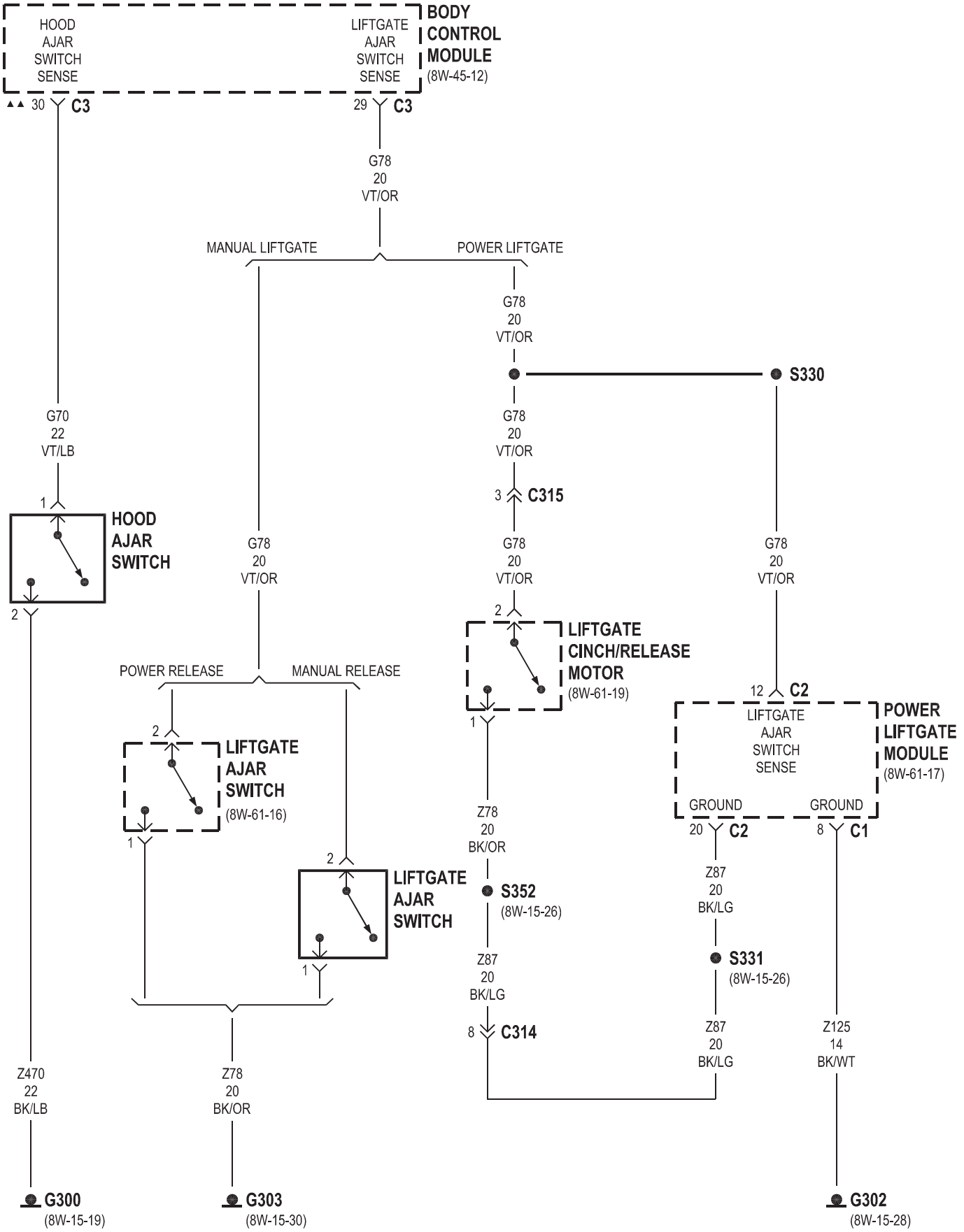
BODY CONTROL MODULE
(8W-45-12)
HOOD AJAR SWITCH SENSE
LIFTGATE AJAR SWITCH SENSE
▲▲ 30 C3
29 C3
G78 20 VT/OR
MANUAL LIFTGATE
POWER LIFTGATE
G78 20 VT/OR
S330
G70 22 VT/LB
G78 20 VT/OR
3 C315
1
HOOD AJAR SWITCH
2
G78 20 VT/OR
G78 20 VT/OR
G78 20 VT/OR
2
LIFTGATE CINCH/RELEASE MOTOR
(8W-61-19)
12 C2
POWER RELEASE
MANUAL RELEASE
2
LIFTGATE AJAR SWITCH
(8W-61-16)
1
LIFTGATE AJAR SWITCH SENSE
POWER LIFTGATE MODULE
(8W-61-17)
GROUND
GROUND
20 C2
8 C1
Z78 20 BK/OR
2
LIFTGATE AJAR SWITCH
1
S352
(8W-15-26)
Z87 20 BK/LG
S331
(8W-15-26)
Z87 20 BK/LG
8 C314
Z87 20 BK/LG
Z125 14 BK/WT
Z470 22 BK/LB
Z78 20 BK/OR
G300
(8W-15-19)
G303
(8W-15-30)
G302
(8W-15-28)
▲▲ EXPORT

8W-40 INSTRUMENT CLUSTER

Component	Page
Body Control Module	8W-40-3, 4
Fuse 24	8W-40-2
G200	8W-40-4
Instrument Cluster	8W-40-2, 3, 4, 5
Integrated Power Module	8W-40-2
Message Center	8W-40-5
Occupant Restraint Controller	8W-40-3
Parking Brake Switch	8W-40-5

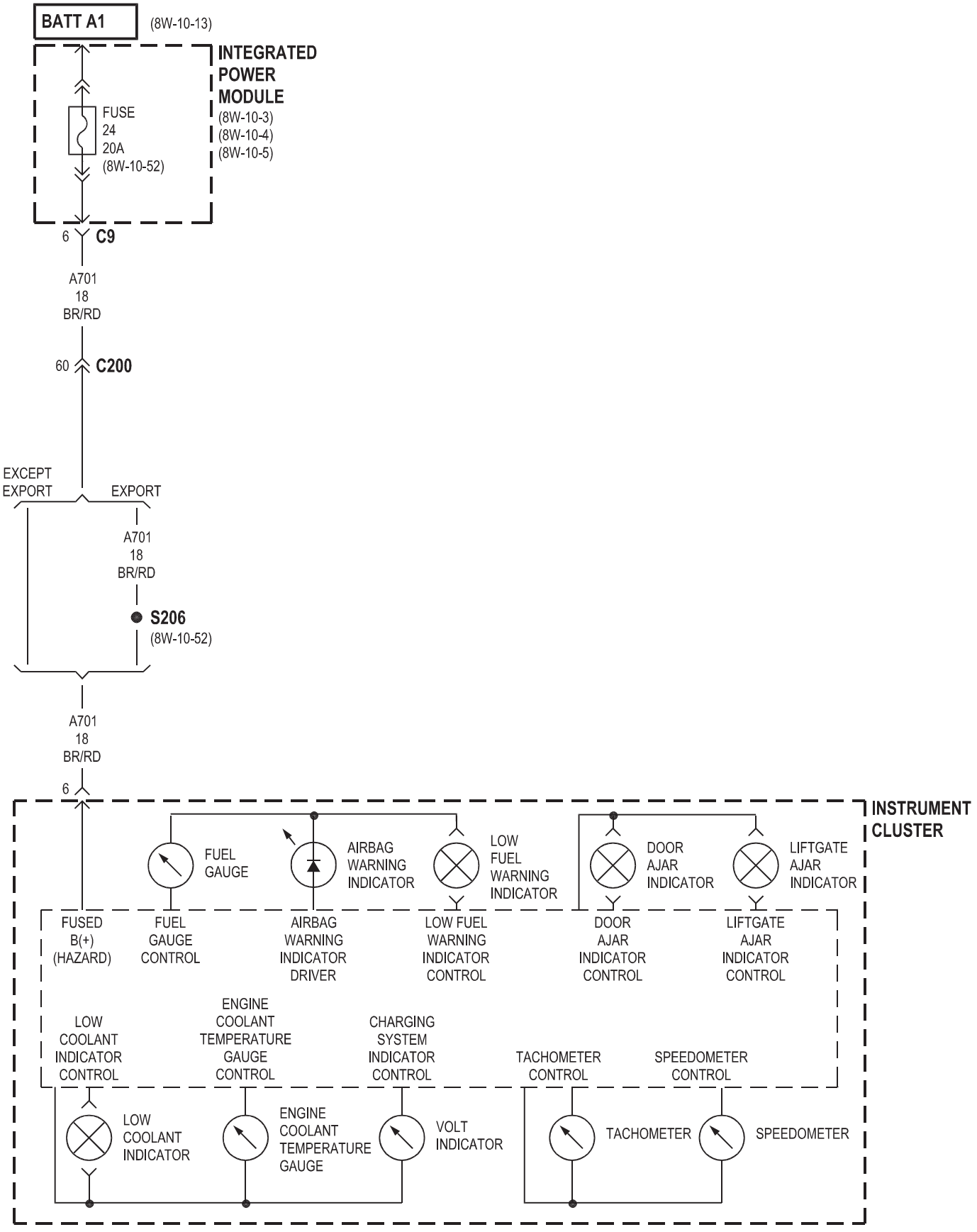
BATT A1
(8W-10-13)
INTEGRATED POWER MODULE
(8W-10-3)
(8W-10-4)
(8W-10-5)
FUSE 24 20A (8W-10-52)
6 C9
A701 18 BR/RD
60 C200
EXCEPT EXPORT
EXPORT
A701 18 BR/RD
S206
(8W-10-52)
A701 18 BR/RD
6
INSTRUMENT CLUSTER
FUEL GAUGE
AIRBAG WARNING INDICATOR
LOW FUEL WARNING INDICATOR
DOOR AJAR INDICATOR
LIFTGATE AJAR INDICATOR
FUSED B(+) (HAZARD)
FUEL GAUGE CONTROL
AIRBAG WARNING INDICATOR DRIVER
LOW FUEL WARNING INDICATOR CONTROL
DOOR AJAR INDICATOR CONTROL
LIFTGATE AJAR INDICATOR CONTROL
LOW COOLANT INDICATOR CONTROL
ENGINE COOLANT TEMPERATURE GAUGE CONTROL
CHARGING SYSTEM INDICATOR CONTROL
TACHOMETER CONTROL
SPEEDOMETER CONTROL
LOW COOLANT INDICATOR
ENGINE COOLANT TEMPERATURE GAUGE
VOLT INDICATOR
TACHOMETER
SPEEDOMETER

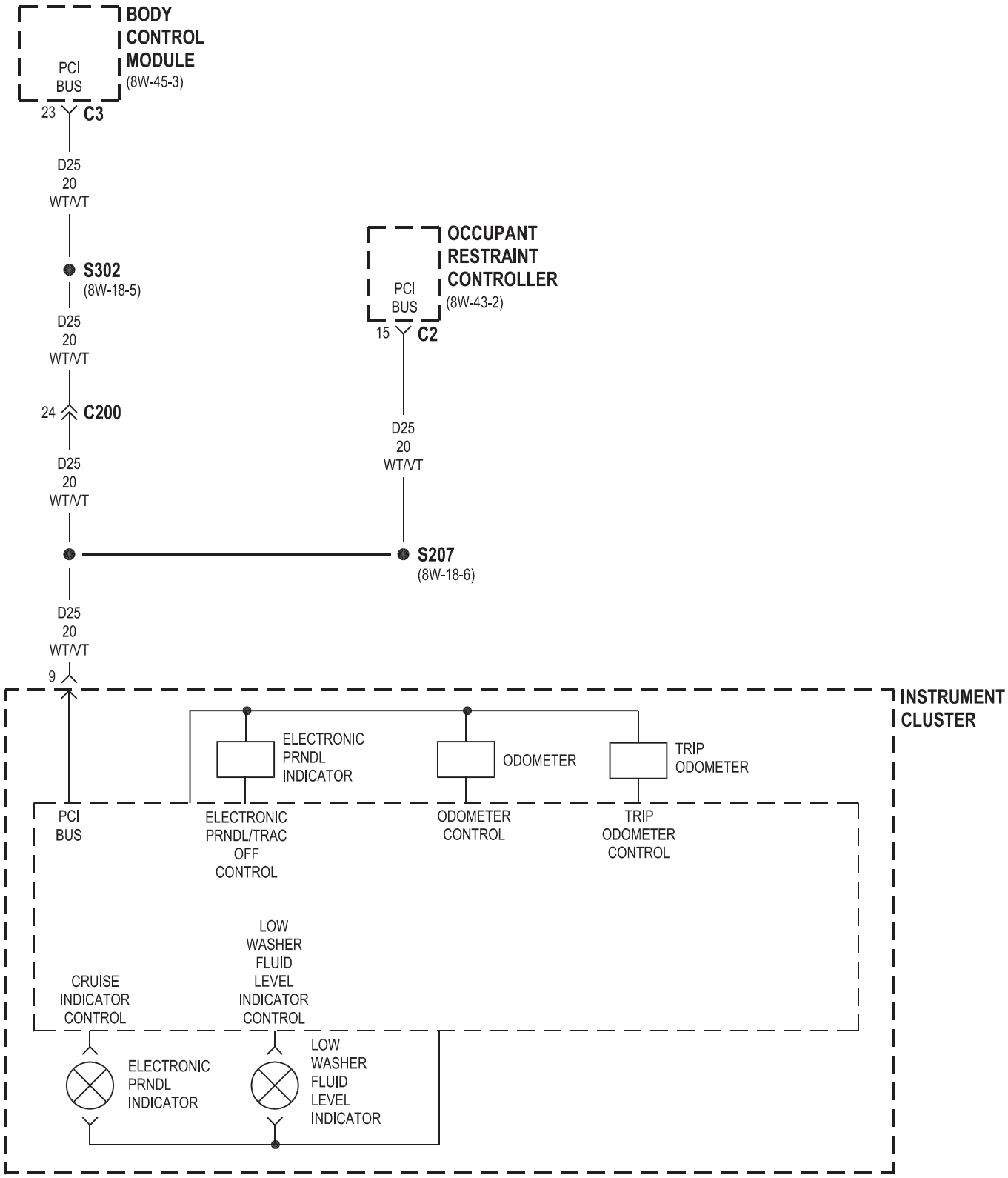
BODY CONTROL MODULE
(8W-45-3)
PCI BUS
23 C3
D25 20 WT/VT
S302
(8W-18-5)
D25 20 WT/VT
24 C200
D25 20 WT/VT
OCCUPANT RESTRAINT CONTROLLER
(8W-43-2)
PCI BUS
15 C2
D25 20 WT/VT
S207
(8W-18-6)
D25 20 WT/VT
9
INSTRUMENT CLUSTER
ELECTRONIC PRNDL INDICATOR
ODOMETER
TRIP ODOMETER
PCI BUS
ELECTRONIC PRNDL/TRAC OFF CONTROL
ODOMETER CONTROL
TRIP ODOMETER CONTROL
LOW WASHER FLUID LEVEL INDICATOR CONTROL
CRUISE INDICATOR CONTROL
ELECTRONIC PRNDL INDICATOR
LOW WASHER FLUID LEVEL INDICATOR

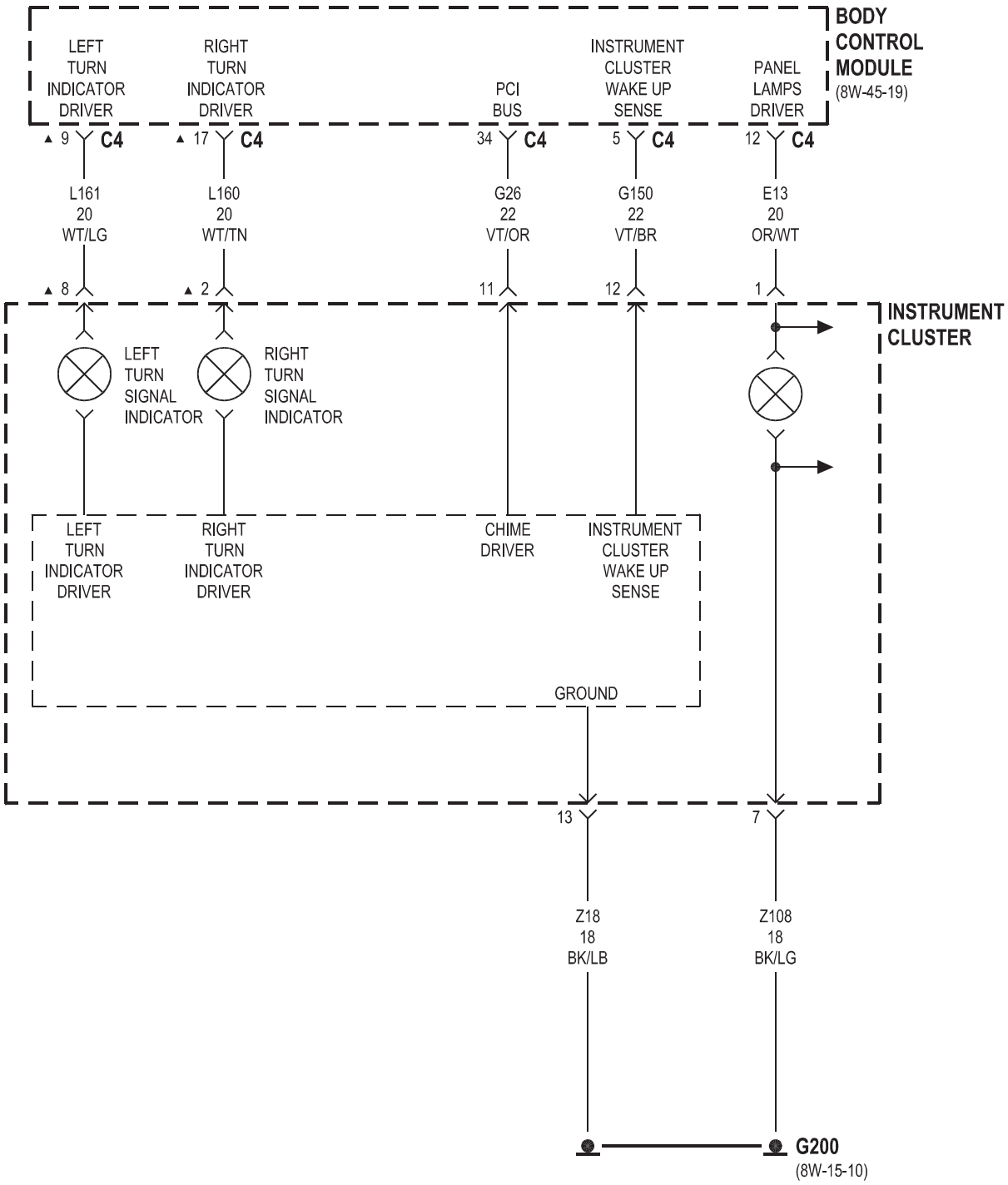

▲ EXCEPT EXPORT

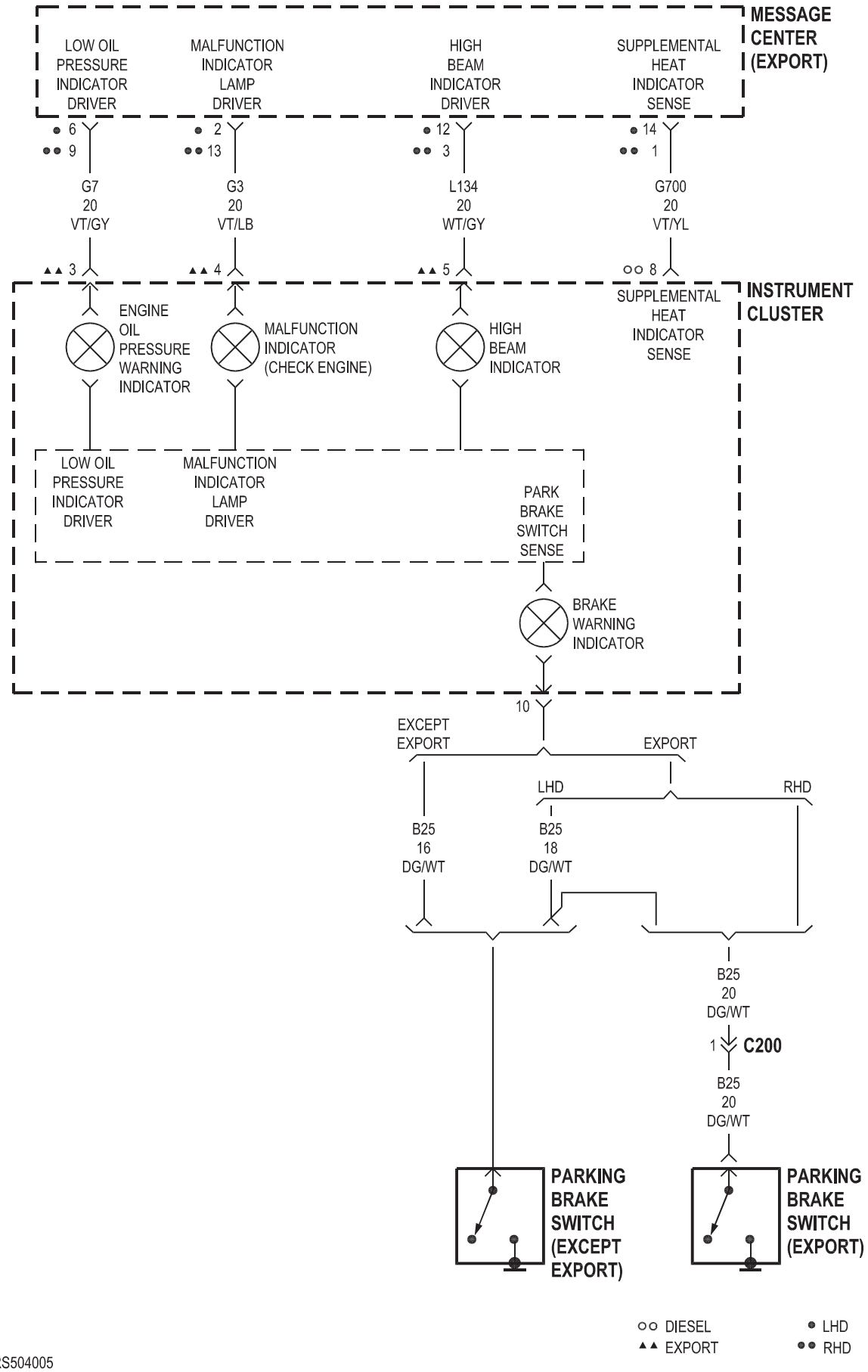
MESSAGE CENTER (EXPORT)
LOW OIL PRESSURE INDICATOR DRIVER
MALFUNCTION INDICATOR LAMP DRIVER
HIGH BEAM INDICATOR DRIVER
SUPPLEMENTAL HEAT INDICATOR SENSE
6
9
2
13
12
3
14
1
G7 20 VT/GY
G3 20 VT/LB
L134 20 WT/GY
G700 20 VT/YL
3
4
5
8
INSTRUMENT CLUSTER
ENGINE OIL PRESSURE WARNING INDICATOR
MALFUNCTION INDICATOR (CHECK ENGINE)
HIGH BEAM INDICATOR
SUPPLEMENTAL HEAT INDICATOR SENSE
LOW OIL PRESSURE INDICATOR DRIVER
MALFUNCTION INDICATOR LAMP DRIVER
PARK BRAKE SWITCH SENSE
BRAKE WARNING INDICATOR
10
EXCEPT EXPORT
EXPORT
LHD
RHD
B25 16 DG/WT
B25 18 DG/WT
B25 20 DG/WT
1
C200
B25 20 DG/WT
PARKING BRAKE SWITCH (EXCEPT EXPORT)
PARKING BRAKE SWITCH (EXPORT)
DIESEL
EXPORT
LHD
RHD

8W-41 HORN/CIGAR LIGHTER/POWER OUTLET

Component	Page
Accessory Relay	8W-41-3, 4
Clockspring	8W-41-2
Data Link Connector	8W-41-4
Floor Console Lamp	8W-41-4
Floor Console Power Outlet	8W-41-4
Front Cigar Lighter	8W-41-3
Front Control Module	8W-41-2, 3, 4
Fuse 5	8W-41-3
Fuse 6	8W-41-3, 4
Fuse 8	8W-41-2
G102	8W-41-2
G200	8W-41-2, 3, 4
G302	8W-41-3, 4
High Note Horn	8W-41-2
Horn Relay	8W-41-2
Horn Switch	8W-41-2
Integrated Power Module	8W-41-2, 3, 4
Power Outlet	8W-41-4
PTC 7	8W-41-4
Radio	8W-41-3
Rear Power Outlet	8W-41-3

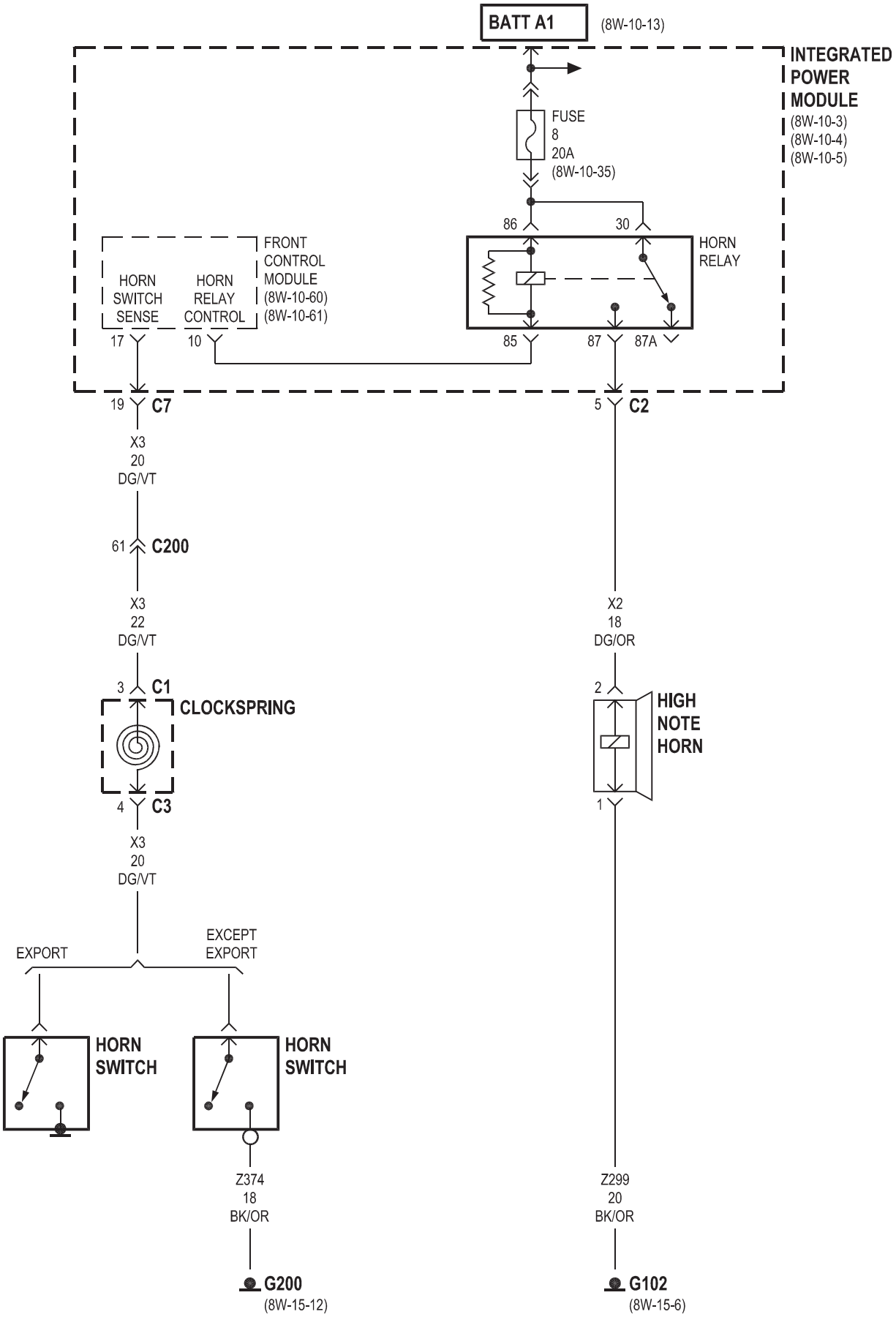
BATT A1
(8W-10-13)
INTEGRATED POWER MODULE
(8W-10-3)
(8W-10-4)
(8W-10-5)
FUSE 8 20A
(8W-10-35)
86
30
HORN RELAY
FRONT CONTROL MODULE
(8W-10-60)
(8W-10-61)
HORN SWITCH SENSE
HORN RELAY CONTROL
17
10
85
87
87A
19
C7
5
C2
X3 20 DG/VT
61
C200
X3 22 DG/VT
X2 18 DG/OR
3
C1
CLOCKSPRING
4
C3
2
1
HIGH NOTE HORN
X3 20 DG/VT
EXPORT
EXCEPT EXPORT
HORN SWITCH
HORN SWITCH
Z374 18 BK/OR
Z299 20 BK/OR
G200
(8W-15-12)
G102
(8W-15-6)

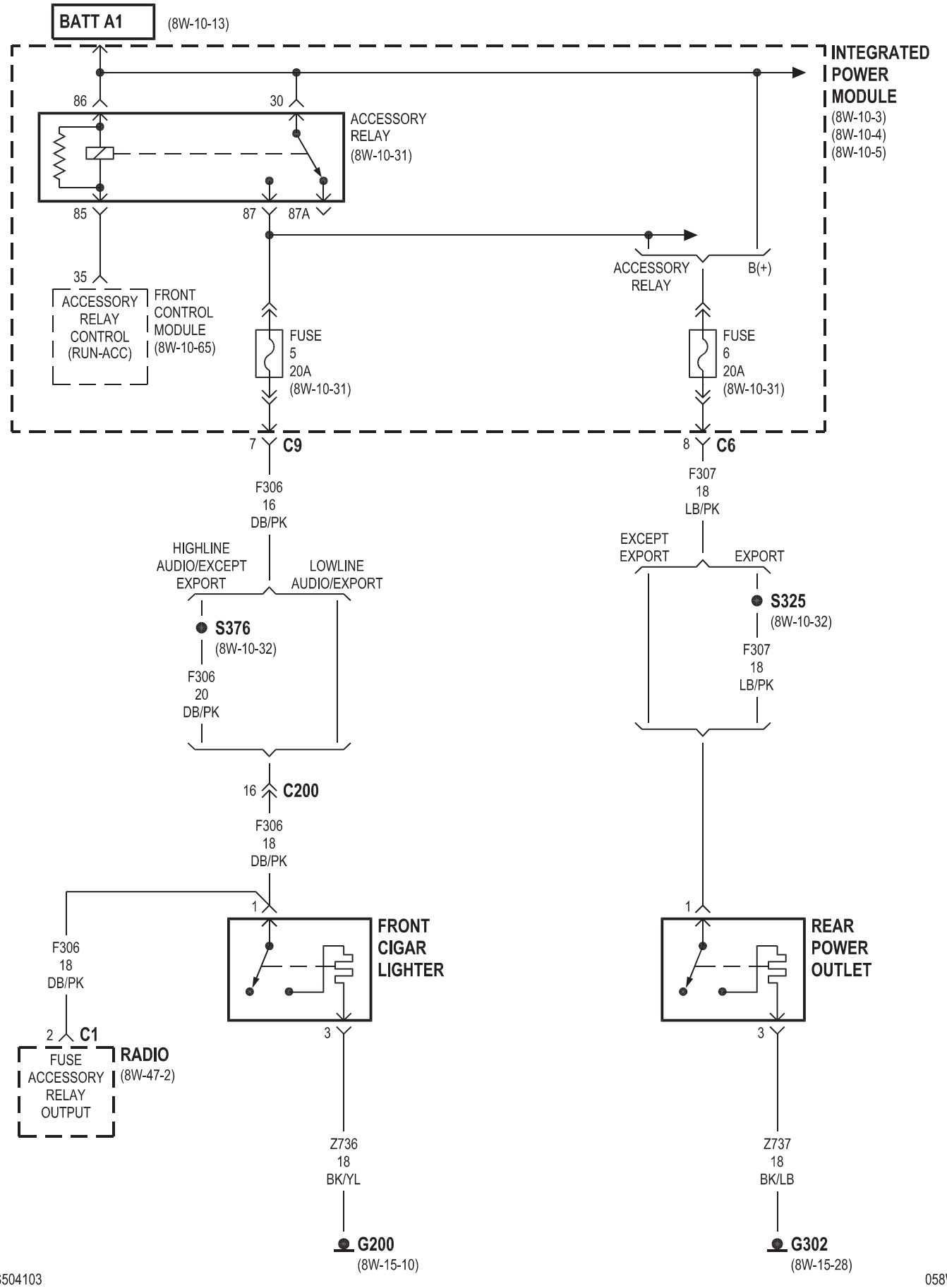
BATT A1
(8W-10-13)
INTEGRATED POWER MODULE
(8W-10-3)
(8W-10-4)
(8W-10-5)
86
30
ACCESSORY RELAY
(8W-10-31)
85
87
87A
35
ACCESSORY RELAY CONTROL (RUN-ACC)
FRONT CONTROL MODULE
(8W-10-65)
FUSE 5 20A
(8W-10-31)
FUSE 6 20A
(8W-10-31)
ACCESSORY RELAY
B(+)
7 C9
8 C6
F306 16 DB/PK
F307 18 LB/PK
HIGHLINE AUDIO/EXCEPT EXPORT
LOWLINE AUDIO/EXPORT
EXCEPT EXPORT
EXPORT
S376
(8W-10-32)
S325
(8W-10-32)
F306 20 DB/PK
F307 18 LB/PK
16 C200
F306 18 DB/PK
1
1
F306 18 DB/PK
FRONT CIGAR LIGHTER
REAR POWER OUTLET
2 C1
FUSE ACCESSORY RELAY OUTPUT
RADIO
(8W-47-2)
3
3
Z736 18 BK/YL
Z737 18 BK/LB
G200
(8W-15-10)
G302
(8W-15-28)

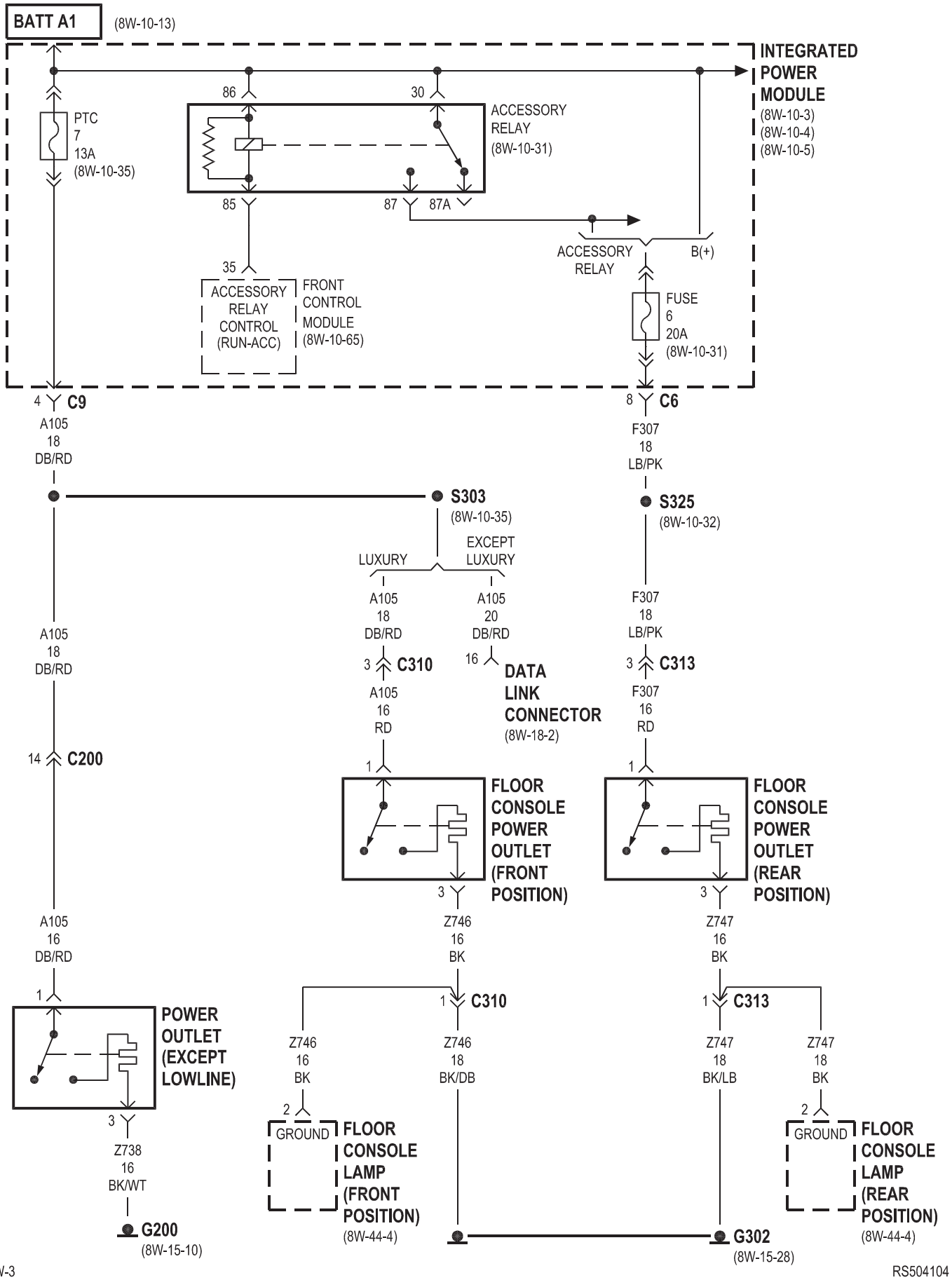
BATT A1
(8W-10-13)
INTEGRATED POWER MODULE
(8W-10-3)
(8W-10-4)
(8W-10-5)
PTC
7
13A
(8W-10-35)
86
30
ACCESSORY RELAY
(8W-10-31)
85
87
87A
35
ACCESSORY RELAY CONTROL (RUN-ACC)
FRONT CONTROL MODULE
(8W-10-65)
ACCESSORY RELAY
B(+)
FUSE
6
20A
(8W-10-31)
4 C9
A105
18
DB/RD
8 C6
F307
18
LB/PK
S303
(8W-10-35)
S325
(8W-10-32)
LUXURY
EXCEPT LUXURY
A105
18
DB/RD
A105
20
DB/RD
F307
18
LB/PK
A105
18
DB/RD
3 C310
16 DATA LINK CONNECTOR
(8W-18-2)
3 C313
A105
16
RD
F307
16
RD
14 C200
1
1
FLOOR CONSOLE POWER OUTLET (FRONT POSITION)
FLOOR CONSOLE POWER OUTLET (REAR POSITION)
3
3
Z746
16
BK
Z747
16
BK
A105
16
DB/RD
1 C310
1 C313
POWER OUTLET (EXCEPT LOWLINE)
Z746
16
BK
Z746
18
BK/DB
Z747
18
BK/LB
Z747
18
BK
2
2
GROUND
GROUND
FLOOR CONSOLE LAMP (FRONT POSITION)
(8W-44-4)
FLOOR CONSOLE LAMP (REAR POSITION)
(8W-44-4)
Z738
16
BK/WT
G200
(8W-15-10)
G302
(8W-15-28)

8W-42 AIR CONDITIONING-HEATER

Component	Page
A/C Compressor Clutch	8W-42-16, 19
A/C Compressor Clutch Relay	8W-42-16, 19
A/C Pressure Sensor	8W-42-16, 19
A/C-Heater Control	8W-42-2, 3, 4, 5, 6, 7, 9
ATC Remote Sensor	8W-42-13
Auto Temp Control	8W-42-10, 11, 12, 13, 14, 15
Battery	8W-42-17
Blower Motor Resistor	8W-42-2, 3
Body Control Module	8W-42-6, 9, 11, 15
Driver Blend Door Actuator	8W-42-7, 12
ECM/PCM Relay	8W-42-17
Engine Control Module	8W-42-16, 17
Evaporator Temperature Sensor	8W-42-7, 12
Front Blower Module	8W-42-13
Front Blower Motor	8W-42-2, 3, 13
Front Blower Motor Relay	8W-42-2, 3, 13
Front Control Module	8W-42-2, 3, 8, 13, 14
Fuse 10	8W-42-2, 3, 13
Fuse 12	8W-42-8, 14
Fuse 14	8W-42-10
Fuse 16	8W-42-17
Fuse 18	8W-42-16, 19
Fuse 27	8W-42-18, 20
Fuselink	8W-42-17
G101	8W-42-19
G102	8W-42-18, 20
G103	8W-42-16
G200	8W-42-2, 3, 4, 5, 6, 8, 10, 11, 13
G300	8W-42-9, 15
G302	8W-42-14
Integrated Power Module	8W-42-2, 3, 8, 10, 13, 14, 16, 17, 18, 19, 20
Mode Door Actuator	8W-42-7, 12
Passenger Blend Door Actuator	8W-42-7, 12
Powertrain Control Module	8W-42-19, 20
Radiator Fan No. 1	8W-42-17, 18, 20
Radiator Fan No. 2	8W-42-18, 20
Radiator Fan Relay	8W-42-20
Radiator Fan Relay No. 1	8W-42-17, 18
Radiator Fan Relay No. 2	8W-42-18
Radiator Fan Relay No. 3	8W-42-18
Rear A/C-Heater Unit	8W-42-8, 9
Rear Auto Temp Control Switch	8W-42-15
Rear Blower Front Control Switch	8W-42-8
Rear Blower Motor	8W-42-14
Rear Blower Motor Power Module	8W-42-14
Rear Blower Motor Relay	8W-42-8, 14
Rear Blower Rear Control Switch	8W-42-8, 9
Rear Mode Motor	8W-42-14
Rear Temperature Motor	8W-42-14
Rear Wiper/Washer Indicator	8W-42-4
Rear Wiper/Washer Switch	8W-42-4
Recirculation Door Actuator	8W-42-7, 12

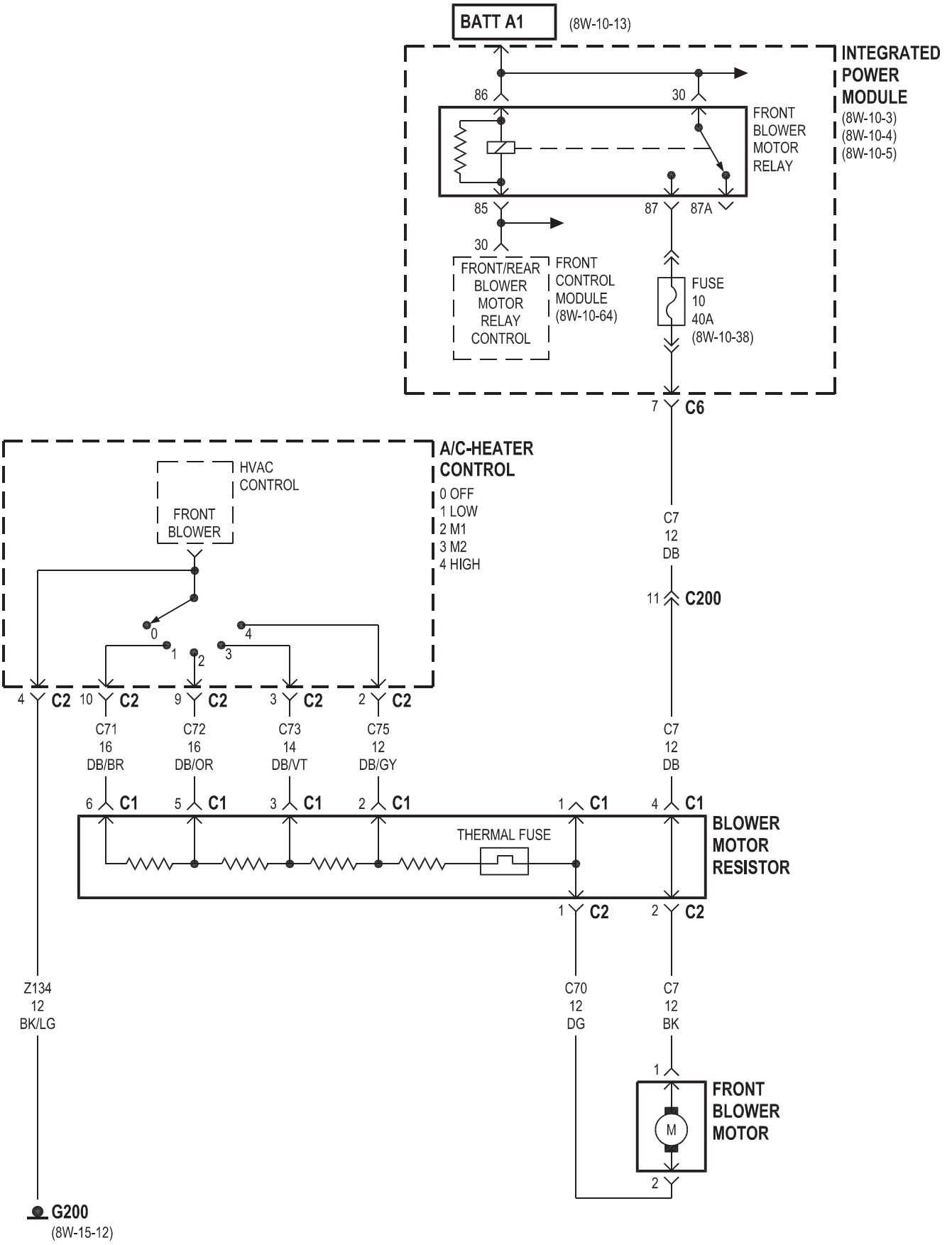
BATT A1
(8W-10-13)
INTEGRATED POWER MODULE
(8W-10-3)
(8W-10-4)
(8W-10-5)
86
30
FRONT BLOWER MOTOR RELAY
85
87
87A
30
FRONT/REAR BLOWER MOTOR RELAY CONTROL
FRONT CONTROL MODULE
(8W-10-64)
FUSE 10 40A
(8W-10-38)
7 C6
A/C-HEATER CONTROL
HVAC CONTROL
FRONT BLOWER
0 OFF
1 LOW
2 M1
3 M2
4 HIGH
C7 12 DB
11 C200
4 C2
10 C2
9 C2
3 C2
2 C2
C71 16 DB/BR
C72 16 DB/OR
C73 14 DB/VT
C75 12 DB/GY
C7 12 DB
6 C1
5 C1
3 C1
2 C1
1 C1
4 C1
THERMAL FUSE
BLOWER MOTOR RESISTOR
1 C2
2 C2
Z134 12 BK/LG
C70 12 DG
C7 12 BK
FRONT BLOWER MOTOR
M
G200
(8W-15-12)

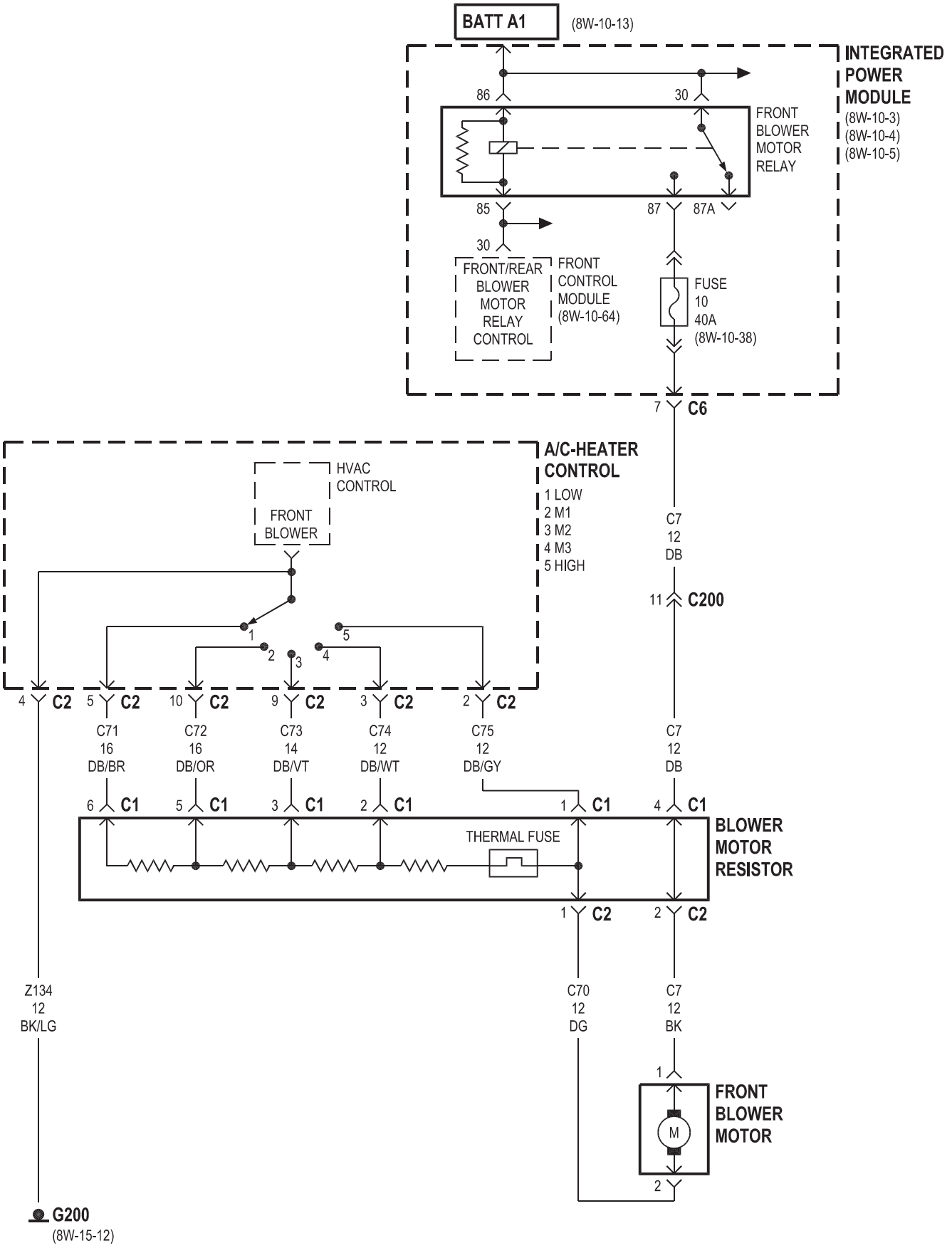
BATT A1
(8W-10-13)
INTEGRATED POWER MODULE
(8W-10-3)
(8W-10-4)
(8W-10-5)
86
30
FRONT BLOWER MOTOR RELAY
85
87
87A
30
FRONT/REAR BLOWER MOTOR RELAY CONTROL
FRONT CONTROL MODULE
(8W-10-64)
FUSE 10 40A
(8W-10-38)
7 C6
A/C-HEATER CONTROL
1 LOW
2 M1
3 M2
4 M3
5 HIGH
HVAC CONTROL
FRONT BLOWER
C7 12 DB
11 C200
4 C2
5 C2
10 C2
9 C2
3 C2
2 C2
C71 16 DB/BR
C72 16 DB/OR
C73 14 DB/VT
C74 12 DB/WT
C75 12 DB/GY
C7 12 DB
6 C1
5 C1
3 C1
2 C1
1 C1
4 C1
THERMAL FUSE
BLOWER MOTOR RESISTOR
1 C2
2 C2
Z134 12 BK/LG
C70 12 DG
C7 12 BK
1
M
2
FRONT BLOWER MOTOR
G200
(8W-15-12)

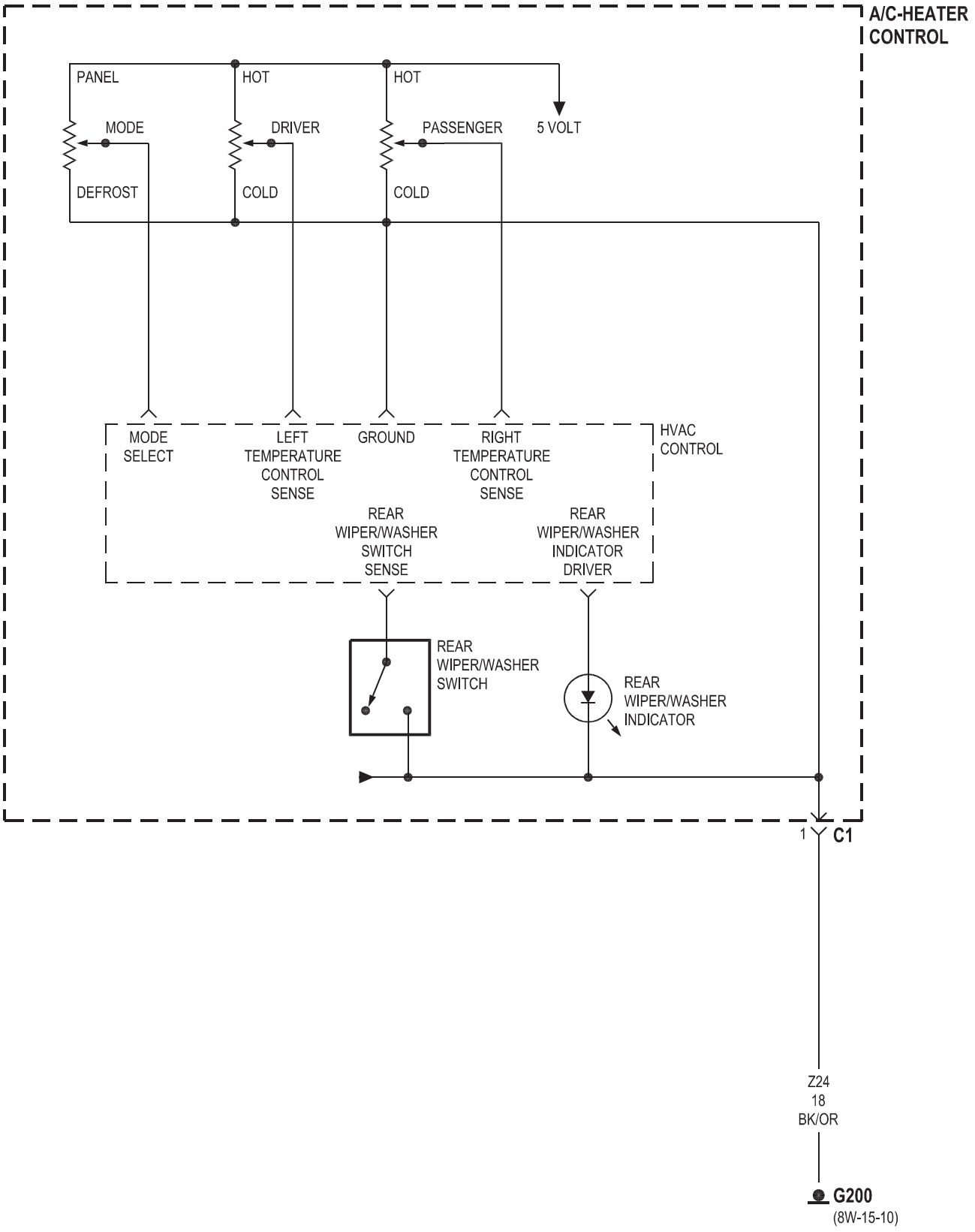
A/C-HEATER CONTROL
PANEL
HOT
HOT
MODE
DRIVER
PASSENGER
5 VOLT
DEFROST
COLD
COLD
MODE SELECT
LEFT TEMPERATURE CONTROL SENSE
GROUND
RIGHT TEMPERATURE CONTROL SENSE
HVAC CONTROL
REAR WIPER/WASHER SWITCH SENSE
REAR WIPER/WASHER INDICATOR DRIVER
REAR WIPER/WASHER SWITCH
REAR WIPER/WASHER INDICATOR
1
C1
Z24
18
BK/OR
G200
(8W-15-10)

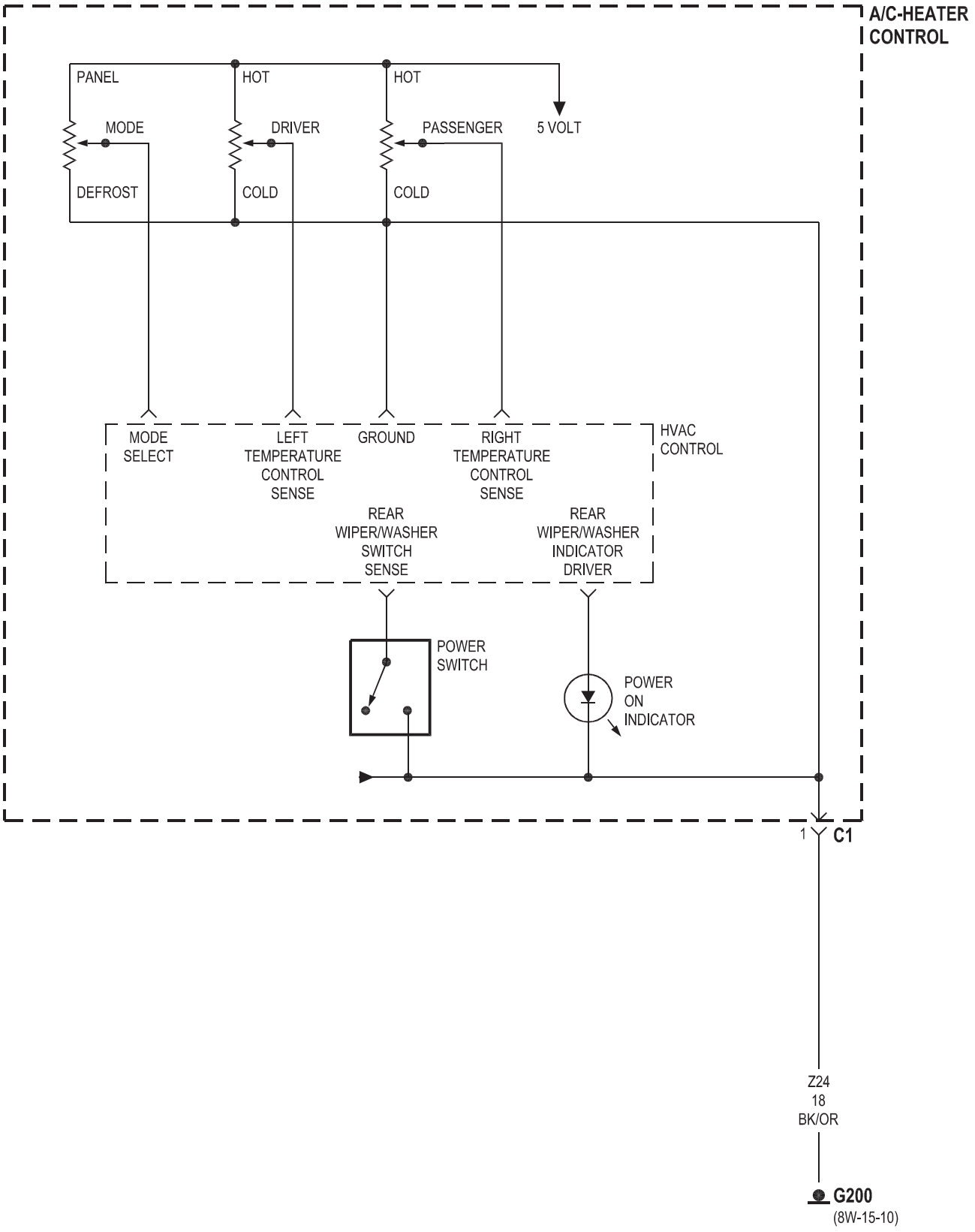
A/C-HEATER CONTROL
PANEL
HOT
HOT
MODE
DRIVER
PASSENGER
5 VOLT
DEFROST
COLD
COLD
MODE SELECT
LEFT TEMPERATURE CONTROL SENSE
GROUND
RIGHT TEMPERATURE CONTROL SENSE
HVAC CONTROL
REAR WIPER/WASHER SWITCH SENSE
REAR WIPER/WASHER INDICATOR DRIVER
POWER SWITCH
POWER ON INDICATOR
1
C1
Z24
18
BK/OR
G200
(8W-15-10)

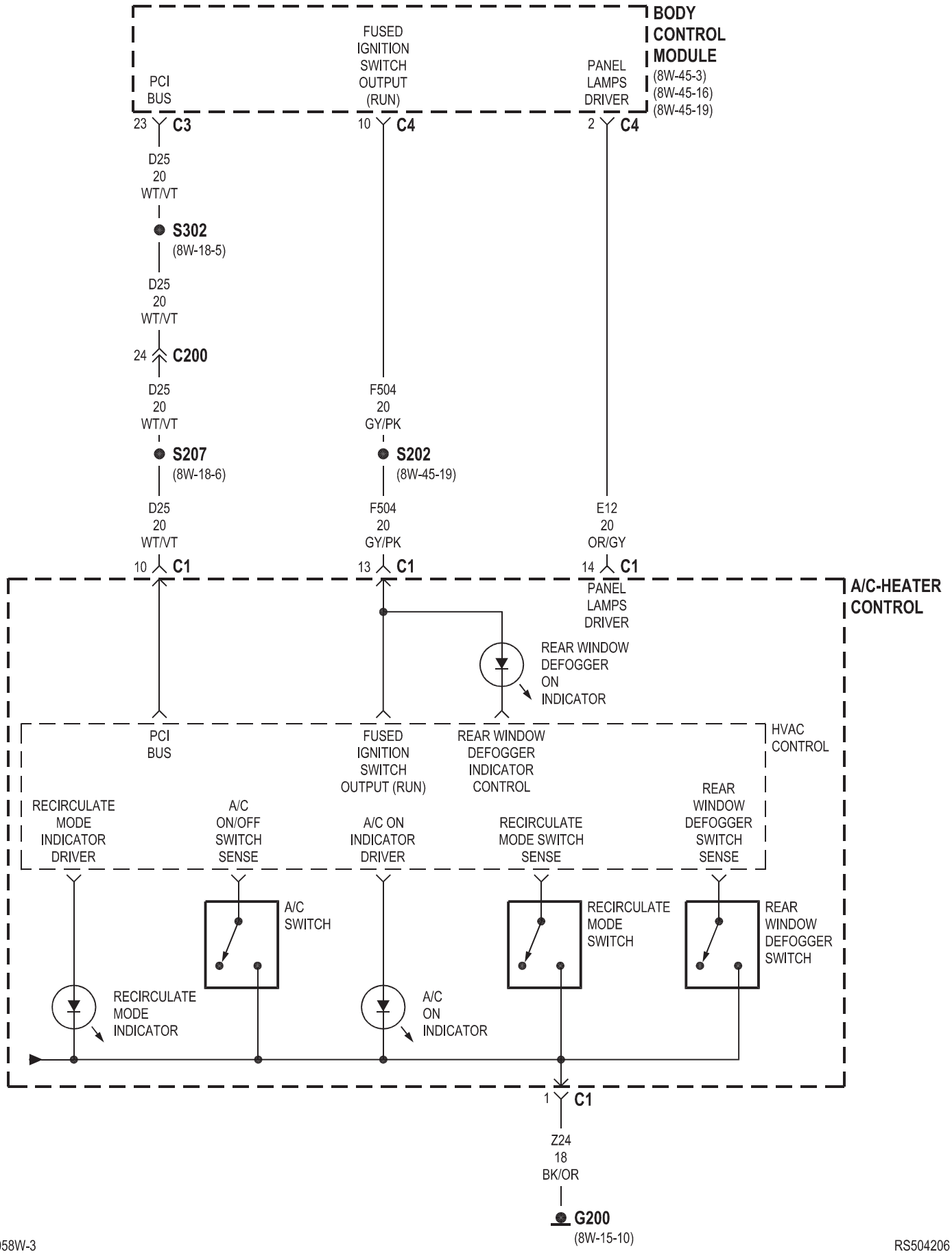
BODY CONTROL MODULE
(8W-45-3)
(8W-45-16)
(8W-45-19)
PCI BUS
FUSED IGNITION SWITCH OUTPUT (RUN)
PANEL LAMPS DRIVER
23 C3
10 C4
2 C4
D25 20 WT/VT
S302
(8W-18-5)
D25 20 WT/VT
24 C200
D25 20 WT/VT
S207
(8W-18-6)
F504 20 GY/PK
S202
(8W-45-19)
E12 20 OR/GY
D25 20 WT/VT
F504 20 GY/PK
10 C1
13 C1
14 C1
A/C-HEATER CONTROL
PANEL LAMPS DRIVER
REAR WINDOW DEFOGGER ON INDICATOR
PCI BUS
FUSED IGNITION SWITCH OUTPUT (RUN)
REAR WINDOW DEFOGGER INDICATOR CONTROL
HVAC CONTROL
RECIRCULATE MODE INDICATOR DRIVER
A/C ON/OFF SWITCH SENSE
A/C ON INDICATOR DRIVER
RECIRCULATE MODE SWITCH SENSE
REAR WINDOW DEFOGGER SWITCH SENSE
A/C SWITCH
RECIRCULATE MODE SWITCH
REAR WINDOW DEFOGGER SWITCH
RECIRCULATE MODE INDICATOR
A/C ON INDICATOR
1 C1
Z24 18 BK/OR
G200
(8W-15-10)

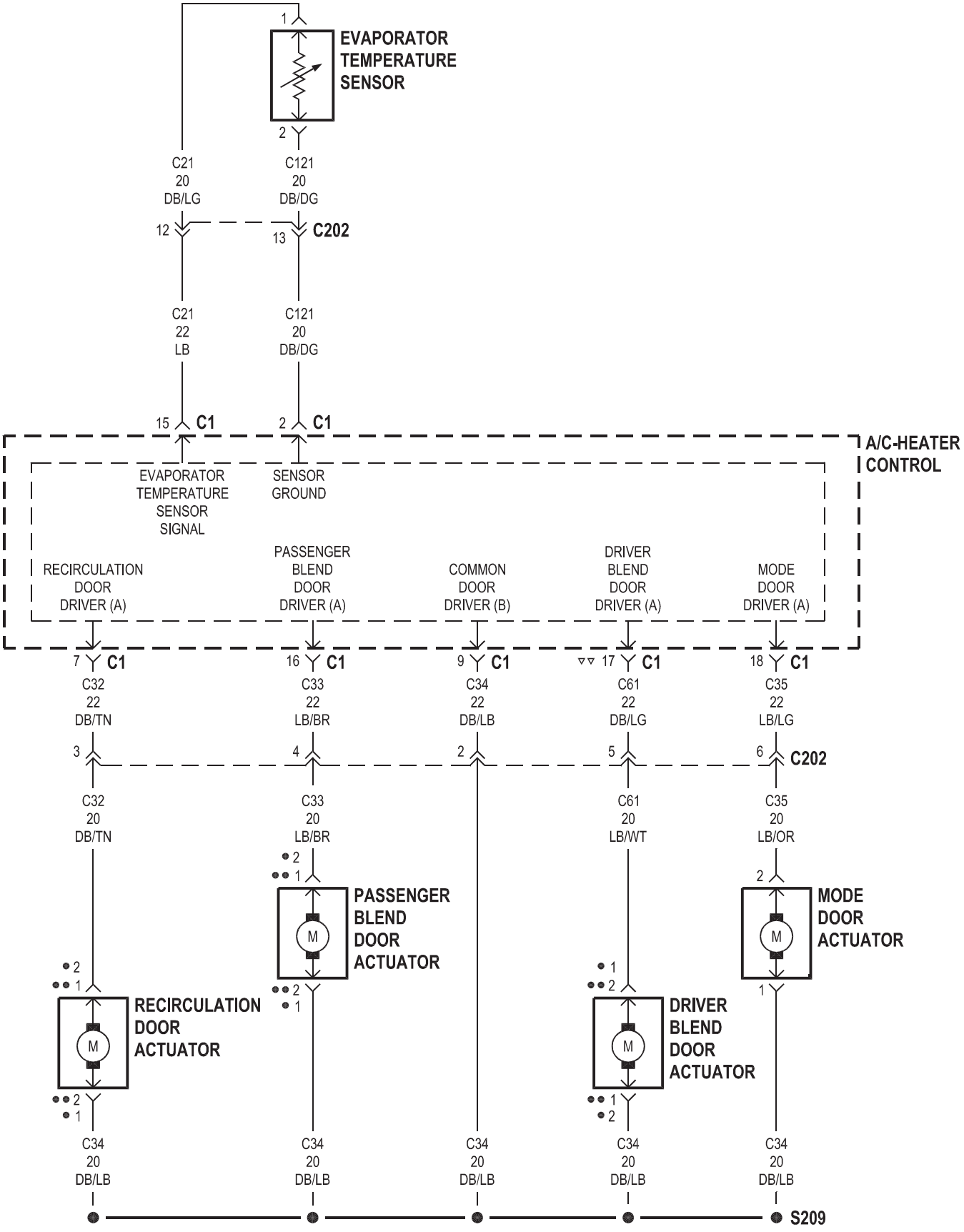
EVAPORATOR TEMPERATURE SENSOR
C21 20 DB/LG
C121 20 DB/DG
C202
C21 22 LB
C121 20 DB/DG
A/C-HEATER CONTROL
EVAPORATOR TEMPERATURE SENSOR SIGNAL
SENSOR GROUND
RECIRCULATION DOOR DRIVER (A)
PASSENGER BLEND DOOR DRIVER (A)
COMMON DOOR DRIVER (B)
DRIVER BLEND DOOR DRIVER (A)
MODE DOOR DRIVER (A)
C32 22 DB/TN
C33 22 LB/BR
C34 22 DB/LB
C61 22 DB/LG
C35 22 LB/LG
C202
C32 20 DB/TN
C33 20 LB/BR
C61 20 LB/WT
C35 20 LB/OR
PASSENGER BLEND DOOR ACTUATOR
MODE DOOR ACTUATOR
RECIRCULATION DOOR ACTUATOR
DRIVER BLEND DOOR ACTUATOR
C34 20 DB/LB
S209
LHD
RHD
EXCEPT BASE

3 ZONE MTC

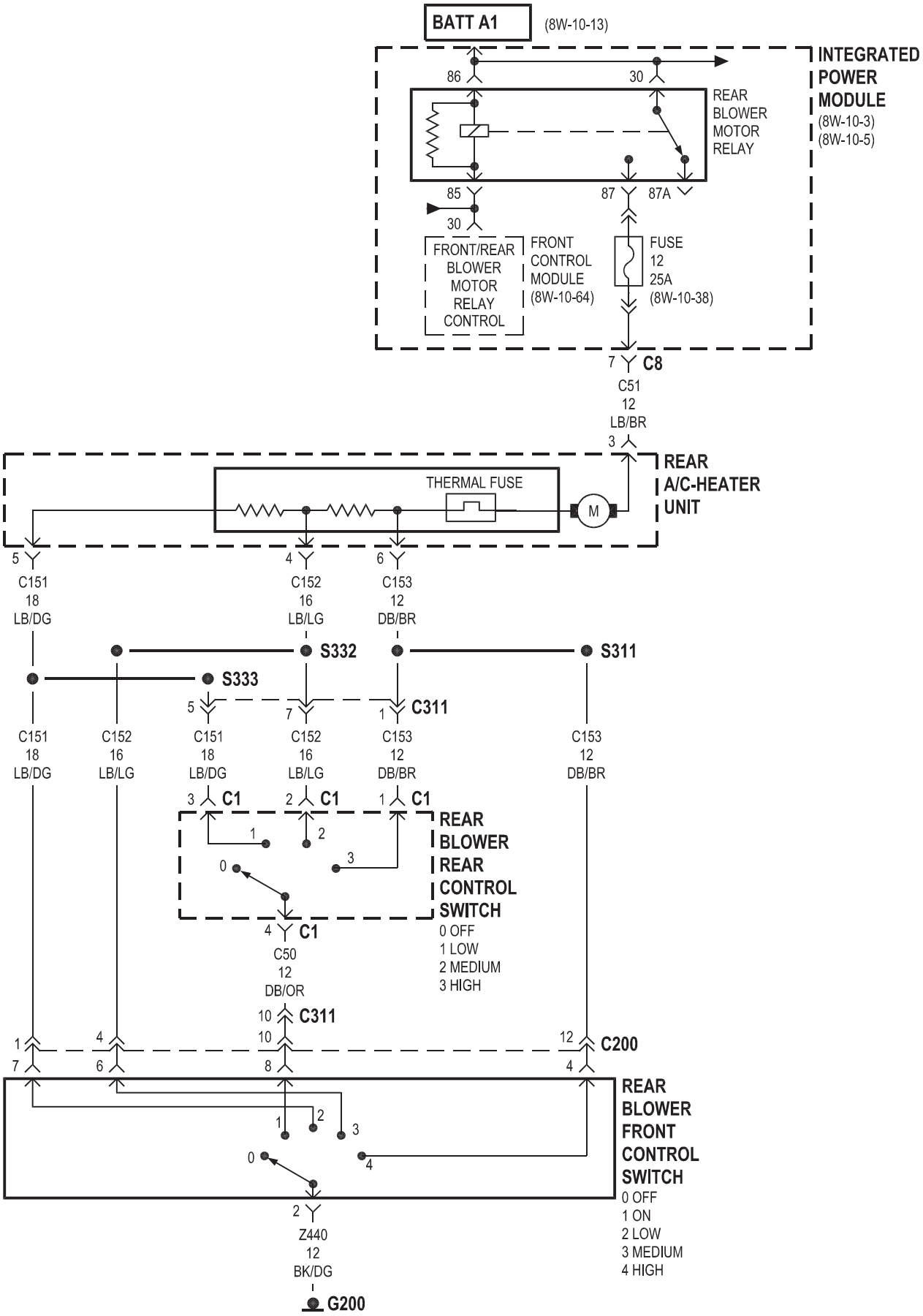
BATT A1
(8W-10-13)
INTEGRATED POWER MODULE
(8W-10-3)
(8W-10-5)
86
30
REAR BLOWER MOTOR RELAY
85
87
87A
30
FRONT/REAR BLOWER MOTOR RELAY CONTROL
FRONT CONTROL MODULE
(8W-10-64)
FUSE 12 25A
(8W-10-38)
7 C8
C51 12 LB/BR
3
REAR A/C-HEATER UNIT
THERMAL FUSE
M
5 C151 18 LB/DG
4 C152 16 LB/LG
6 C153 12 DB/BR
S332
S311
S333
5 C151 18 LB/DG
7 C152 16 LB/LG
1 C153 12 DB/BR
C311
C151 18 LB/DG
C152 16 LB/LG
C151 18 LB/DG
C152 16 LB/LG
C153 12 DB/BR
C153 12 DB/BR
3 C1
2 C1
1 C1
REAR BLOWER REAR CONTROL SWITCH
0 OFF
1 LOW
2 MEDIUM
3 HIGH
4 C1
C50 12 DB/OR
10 C311
1
4
10
12 C200
7
6
8
4
REAR BLOWER FRONT CONTROL SWITCH
0 OFF
1 ON
2 LOW
3 MEDIUM
4 HIGH
2 Z440 12 BK/DG
G200
(8W-15-12)

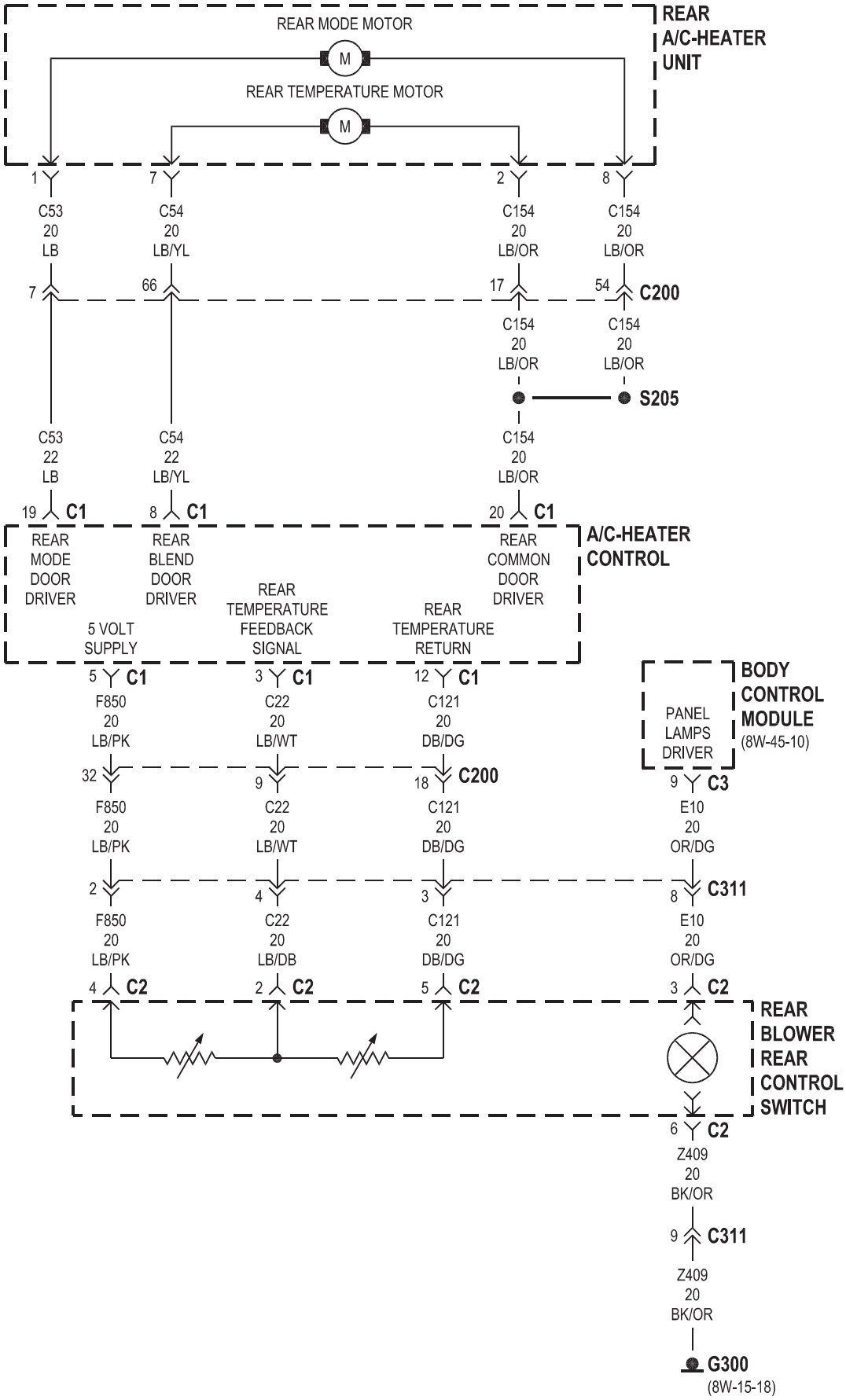
REAR A/C-HEATER UNIT
REAR MODE MOTOR
M
REAR TEMPERATURE MOTOR
M
1
7
2
8
C53 20 LB
C54 20 LB/YL
C154 20 LB/OR
C154 20 LB/OR
7
66
17
54
C200
C154 20 LB/OR
C154 20 LB/OR
S205
C53 22 LB
C54 22 LB/YL
C154 20 LB/OR
19 C1
8 C1
20 C1
A/C-HEATER CONTROL
REAR MODE DOOR DRIVER
REAR BLEND DOOR DRIVER
REAR COMMON DOOR DRIVER
5 VOLT SUPPLY
REAR TEMPERATURE FEEDBACK SIGNAL
REAR TEMPERATURE RETURN
5 C1
3 C1
12 C1
F850 20 LB/PK
C22 20 LB/WT
C121 20 DB/DG
32
9
18
C200
F850 20 LB/PK
C22 20 LB/WT
C121 20 DB/DG
2
4
3
F850 20 LB/PK
C22 20 LB/DB
C121 20 DB/DG
4 C2
2 C2
5 C2
BODY CONTROL MODULE
(8W-45-10)
PANEL LAMPS DRIVER
9 C3
E10 20 OR/DG
8 C311
E10 20 OR/DG
3 C2
REAR BLOWER REAR CONTROL SWITCH
6 C2
Z409 20 BK/OR
9 C311
Z409 20 BK/OR
G300
(8W-15-18)

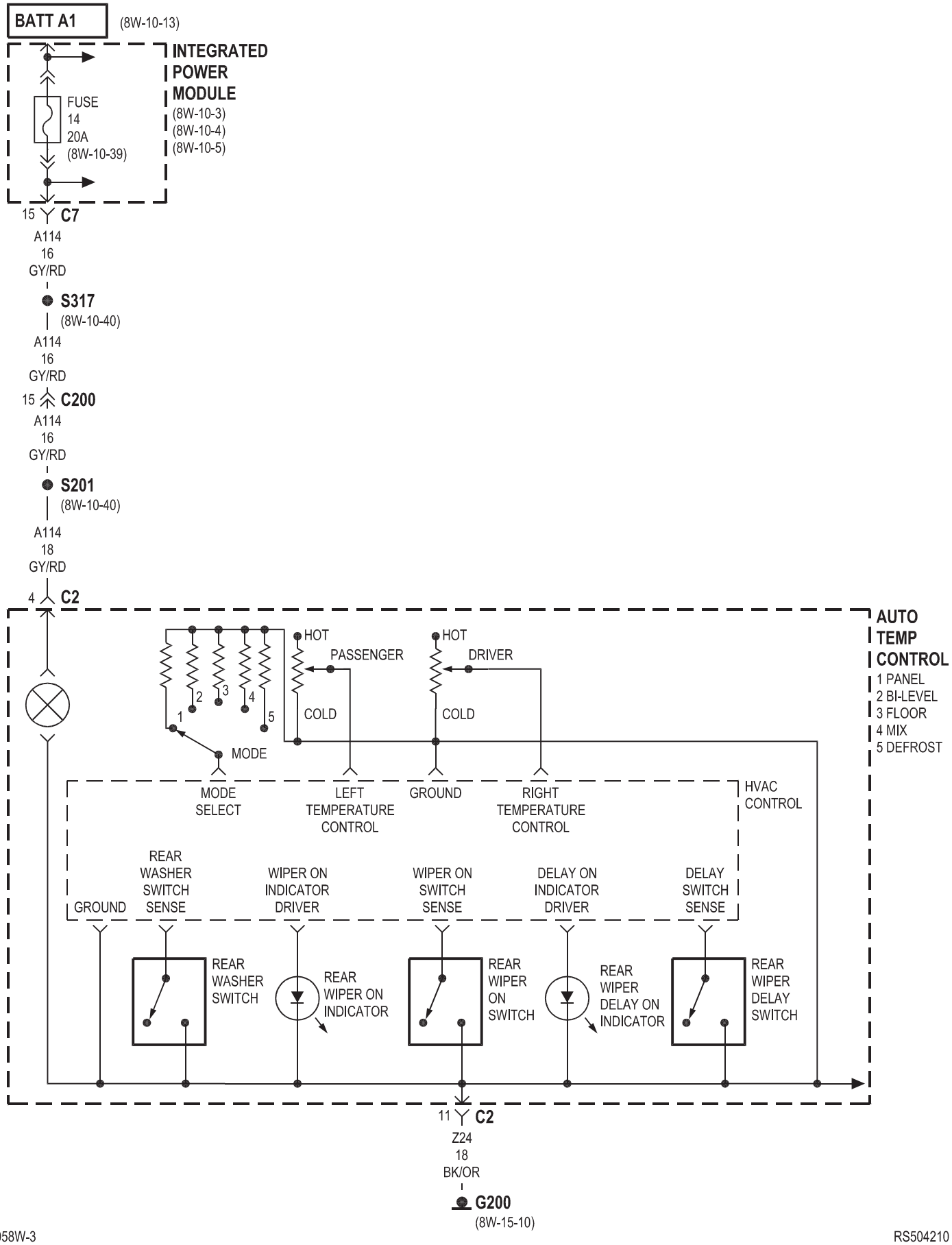
BATT A1
(8W-10-13)
INTEGRATED POWER MODULE
(8W-10-3)
(8W-10-4)
(8W-10-5)
FUSE 14 20A
(8W-10-39)
15 C7
A114 16 GY/RD
S317
(8W-10-40)
A114 16 GY/RD
15 C200
A114 16 GY/RD
S201
(8W-10-40)
A114 18 GY/RD
4 C2
AUTO TEMP CONTROL
1 PANEL
2 BI-LEVEL
3 FLOOR
4 MIX
5 DEFROST
HOT
PASSENGER
DRIVER
COLD
COLD
MODE
MODE SELECT
LEFT TEMPERATURE CONTROL
GROUND
RIGHT TEMPERATURE CONTROL
HVAC CONTROL
GROUND
REAR WASHER SWITCH SENSE
WIPER ON INDICATOR DRIVER
WIPER ON SWITCH SENSE
DELAY ON INDICATOR DRIVER
DELAY SWITCH SENSE
REAR WASHER SWITCH
REAR WIPER ON INDICATOR
REAR WIPER ON SWITCH
REAR WIPER DELAY ON INDICATOR
REAR WIPER DELAY SWITCH
11 C2
Z24 18 BK/OR
G200
(8W-15-10)

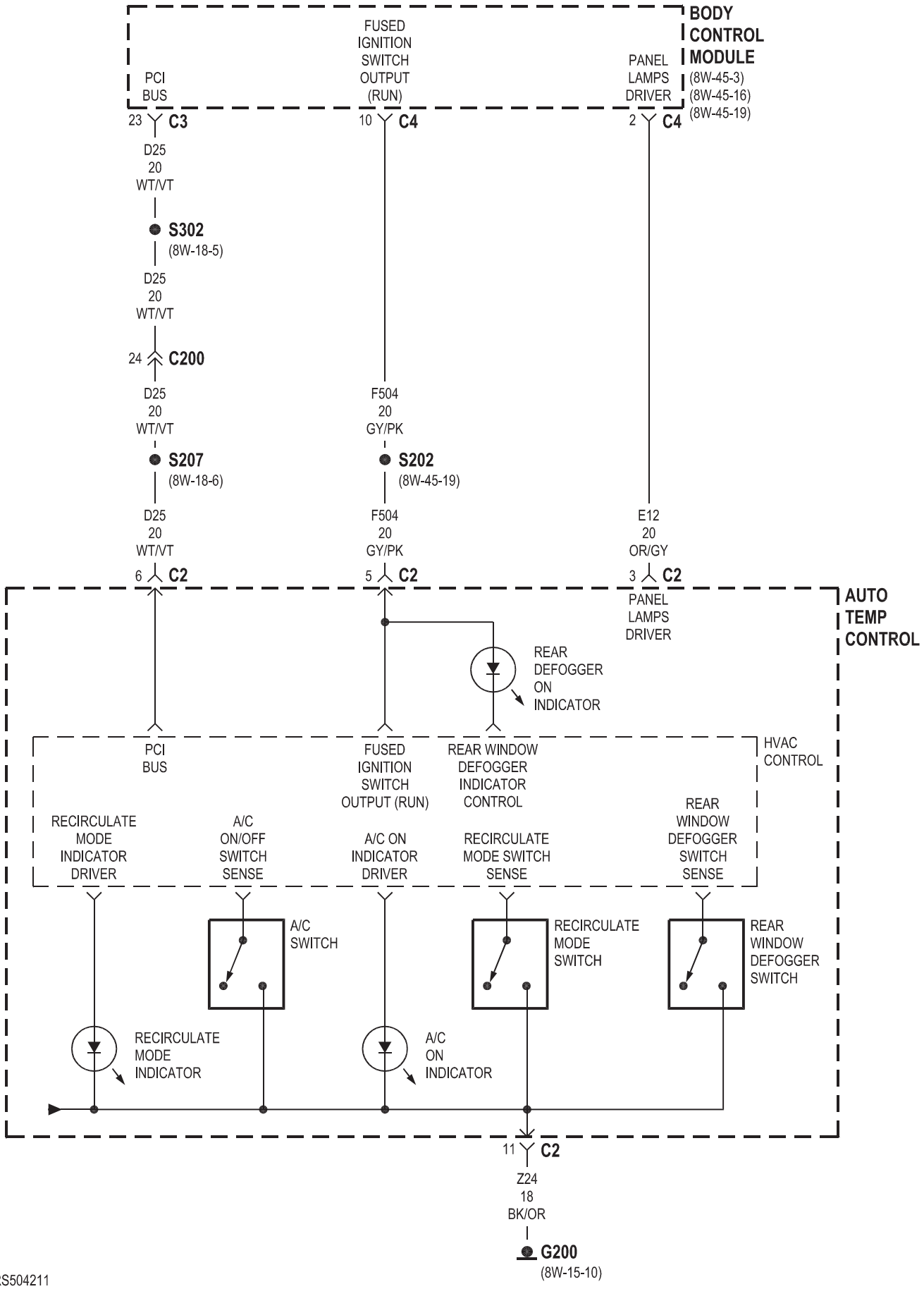
BODY CONTROL MODULE
(8W-45-3)
(8W-45-16)
(8W-45-19)
PCI BUS
FUSED IGNITION SWITCH OUTPUT (RUN)
PANEL LAMPS DRIVER
23 C3
10 C4
2 C4
D25 20 WT/VT
S302
(8W-18-5)
D25 20 WT/VT
24 C200
D25 20 WT/VT
S207
(8W-18-6)
F504 20 GY/PK
S202
(8W-45-19)
E12 20 OR/GY
D25 20 WT/VT
F504 20 GY/PK
6 C2
5 C2
3 C2
PANEL LAMPS DRIVER
AUTO TEMP CONTROL
REAR DEFOGGER ON INDICATOR
PCI BUS
FUSED IGNITION SWITCH OUTPUT (RUN)
REAR WINDOW DEFOGGER INDICATOR CONTROL
HVAC CONTROL
RECIRCULATE MODE INDICATOR DRIVER
A/C ON/OFF SWITCH SENSE
A/C ON INDICATOR DRIVER
RECIRCULATE MODE SWITCH SENSE
REAR WINDOW DEFOGGER SWITCH SENSE
A/C SWITCH
RECIRCULATE MODE SWITCH
REAR WINDOW DEFOGGER SWITCH
RECIRCULATE MODE INDICATOR
A/C ON INDICATOR
11 C2
Z24 18 BK/OR
G200
(8W-15-10)

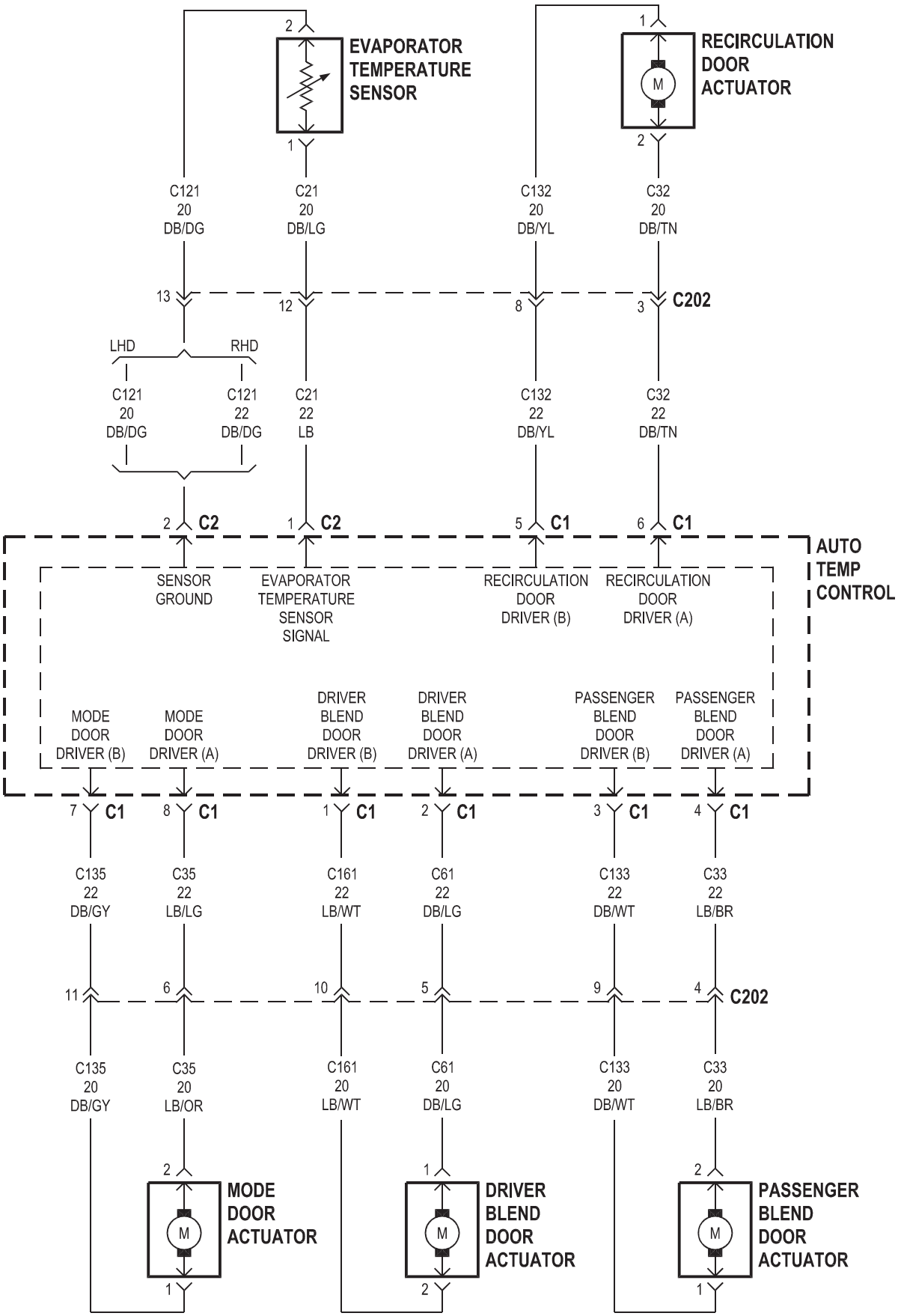
EVAPORATOR TEMPERATURE SENSOR
RECIRCULATION DOOR ACTUATOR
C121 20 DB/DG
C21 20 DB/LG
C132 20 DB/YL
C32 20 DB/TN
C202
LHD
RHD
C121 20 DB/DG
C121 22 DB/DG
C21 22 LB
C132 22 DB/YL
C32 22 DB/TN
C2
C1
AUTO TEMP CONTROL
SENSOR GROUND
EVAPORATOR TEMPERATURE SENSOR SIGNAL
RECIRCULATION DOOR DRIVER (B)
RECIRCULATION DOOR DRIVER (A)
MODE DOOR DRIVER (B)
MODE DOOR DRIVER (A)
DRIVER BLEND DOOR DRIVER (B)
DRIVER BLEND DOOR DRIVER (A)
PASSENGER BLEND DOOR DRIVER (B)
PASSENGER BLEND DOOR DRIVER (A)
C135 22 DB/GY
C35 22 LB/LG
C161 22 LB/WT
C61 22 DB/LG
C133 22 DB/WT
C33 22 LB/BR
C135 20 DB/GY
C35 20 LB/OR
C161 20 LB/WT
C61 20 DB/LG
C133 20 DB/WT
C33 20 LB/BR
MODE DOOR ACTUATOR
DRIVER BLEND DOOR ACTUATOR
PASSENGER BLEND DOOR ACTUATOR

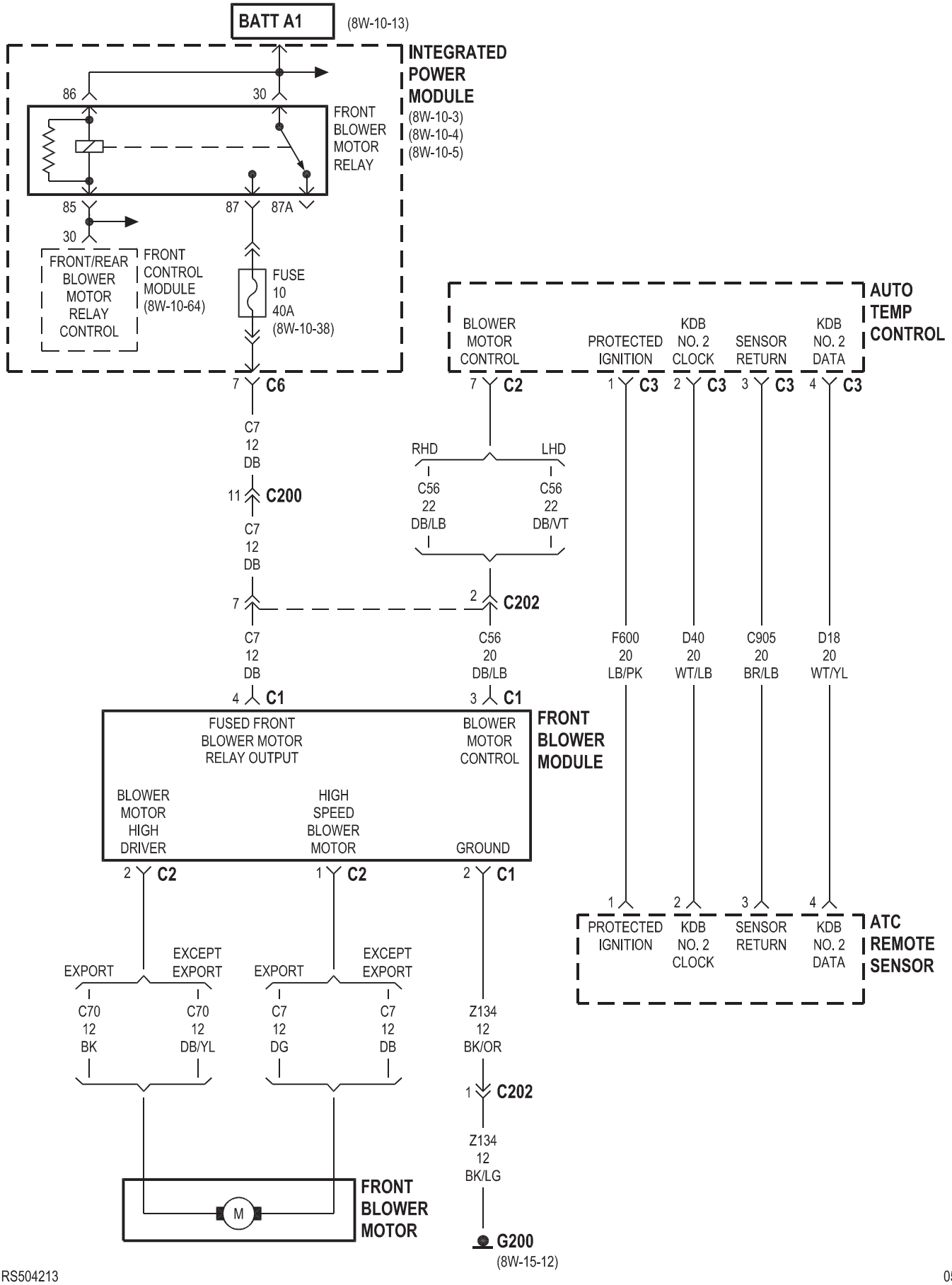
BATT A1
(8W-10-13)
INTEGRATED POWER MODULE
(8W-10-3)
(8W-10-4)
(8W-10-5)
86
30
FRONT BLOWER MOTOR RELAY
85
87
87A
30
FRONT/REAR BLOWER MOTOR RELAY CONTROL
FRONT CONTROL MODULE
(8W-10-64)
FUSE 10 40A
(8W-10-38)
7 C6
C7 12 DB
11 C200
C7 12 DB
7
AUTO TEMP CONTROL
BLOWER MOTOR CONTROL
PROTECTED IGNITION
KDB NO. 2 CLOCK
SENSOR RETURN
KDB NO. 2 DATA
7 C2
1 C3
2 C3
3 C3
4 C3
RHD
LHD
C56 22 DB/LB
C56 22 DB/VT
2 C202
C7 12 DB
4 C1
C56 20 DB/LB
3 C1
F600 20 LB/PK
D40 20 WT/LB
C905 20 BR/LB
D18 20 WT/YL
FRONT BLOWER MODULE
FUSED FRONT BLOWER MOTOR RELAY OUTPUT
BLOWER MOTOR CONTROL
BLOWER MOTOR HIGH DRIVER
HIGH SPEED BLOWER MOTOR
GROUND
2 C2
1 C2
2 C1
1
2
3
4
ATC REMOTE SENSOR
PROTECTED IGNITION
KDB NO. 2 CLOCK
SENSOR RETURN
KDB NO. 2 DATA
EXPORT
EXCEPT EXPORT
EXPORT
EXCEPT EXPORT
C70 12 BK
C70 12 DB/YL
C7 12 DG
C7 12 DB
Z134 12 BK/OR
1 C202
Z134 12 BK/LG
FRONT BLOWER MOTOR
M
G200
(8W-15-12)

3 ZONE ATC

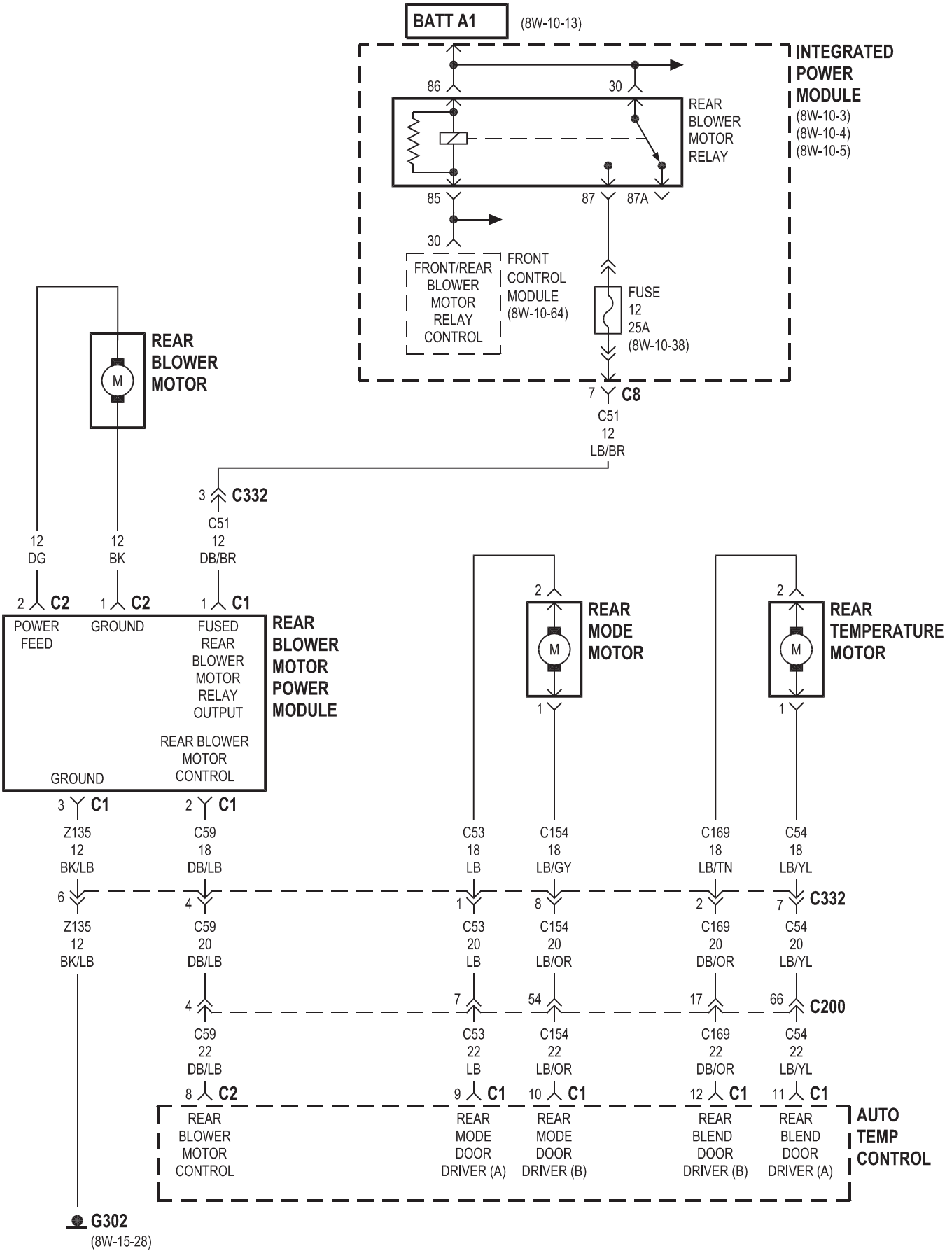
BATT A1
(8W-10-13)
INTEGRATED POWER MODULE
(8W-10-3)
(8W-10-4)
(8W-10-5)
86
30
REAR BLOWER MOTOR RELAY
85
87
87A
30
FRONT/REAR BLOWER MOTOR RELAY CONTROL
FRONT CONTROL MODULE
(8W-10-64)
FUSE 12 25A
(8W-10-38)
7 C8
C51 12 LB/BR
REAR BLOWER MOTOR
3 C332
C51 12 DB/BR
12 DG
12 BK
2 C2
1 C2
1 C1
POWER FEED
GROUND
FUSED REAR BLOWER MOTOR RELAY OUTPUT
REAR BLOWER MOTOR CONTROL
REAR BLOWER MOTOR POWER MODULE
GROUND
3 C1
2 C1
Z135 12 BK/LB
C59 18 DB/LB
6
4
Z135 12 BK/LB
C59 20 DB/LB
4
C59 22 DB/LB
8 C2
REAR BLOWER MOTOR CONTROL
G302
(8W-15-28)
2
REAR MODE MOTOR
1
C53 18 LB
C154 18 LB/GY
1
8
C53 20 LB
C154 20 LB/OR
7
54
C53 22 LB
C154 22 LB/OR
9 C1
10 C1
REAR MODE DOOR DRIVER (A)
REAR MODE DOOR DRIVER (B)
2
REAR TEMPERATURE MOTOR
1
C169 18 LB/TN
C54 18 LB/YL
2
7 C332
C169 20 DB/OR
C54 20 LB/YL
17
66 C200
C169 22 DB/OR
C54 22 LB/YL
12 C1
11 C1
REAR BLEND DOOR DRIVER (B)
REAR BLEND DOOR DRIVER (A)
AUTO TEMP CONTROL

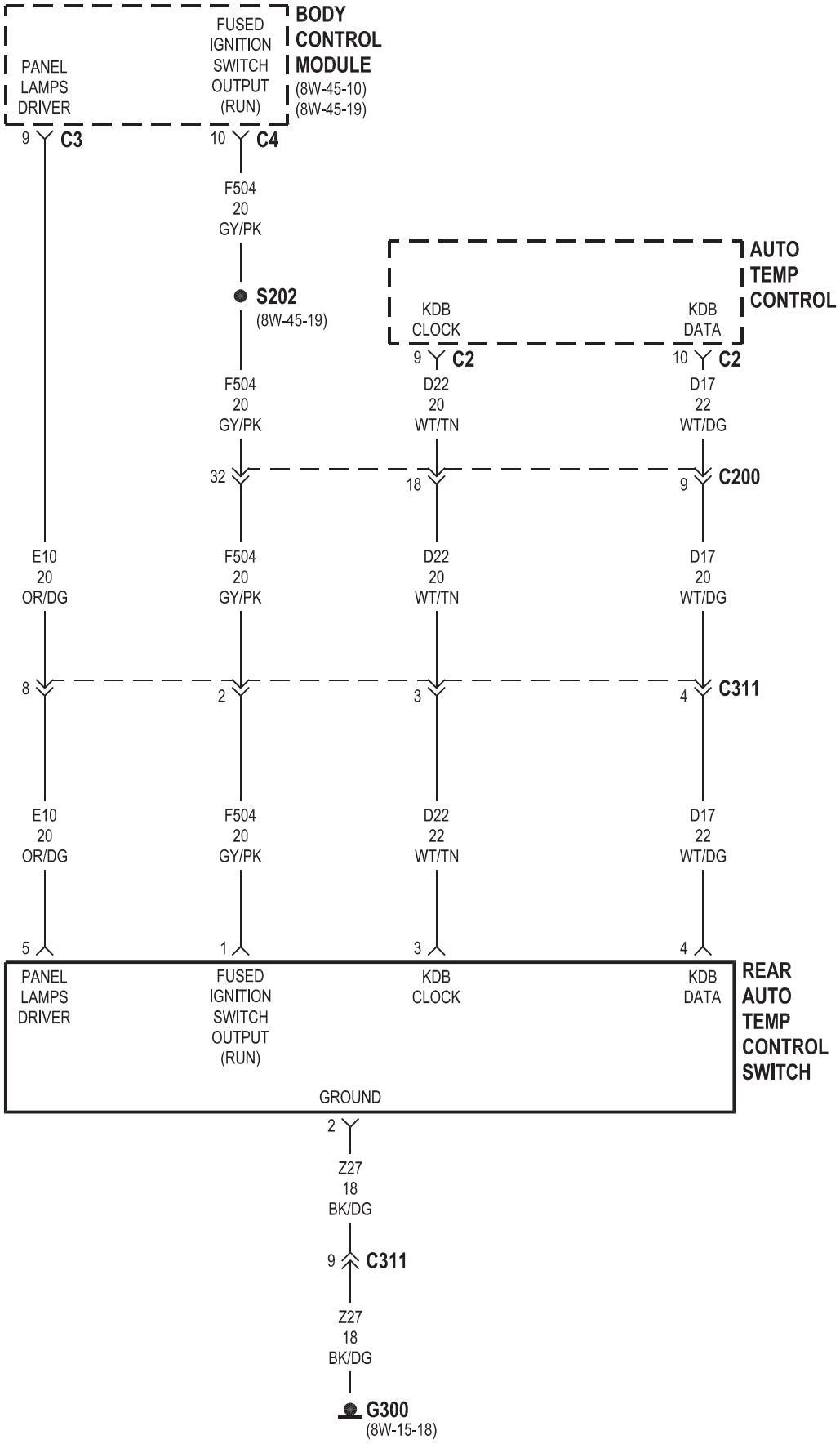
BODY CONTROL MODULE
(8W-45-10)
(8W-45-19)
PANEL LAMPS DRIVER
FUSED IGNITION SWITCH OUTPUT (RUN)
9 C3
10 C4
F504 20 GY/PK
S202
(8W-45-19)
AUTO TEMP CONTROL
KDB CLOCK
KDB DATA
9 C2
10 C2
D22 20 WT/TN
D17 22 WT/DG
F504 20 GY/PK
32
18
9 C200
E10 20 OR/DG
F504 20 GY/PK
D22 20 WT/TN
D17 20 WT/DG
8
2
3
4 C311
E10 20 OR/DG
F504 20 GY/PK
D22 22 WT/TN
D17 22 WT/DG
5
1
3
4
PANEL LAMPS DRIVER
FUSED IGNITION SWITCH OUTPUT (RUN)
KDB CLOCK
KDB DATA
REAR AUTO TEMP CONTROL SWITCH
GROUND
2
Z27 18 BK/DG
9 C311
Z27 18 BK/DG
G300
(8W-15-18)

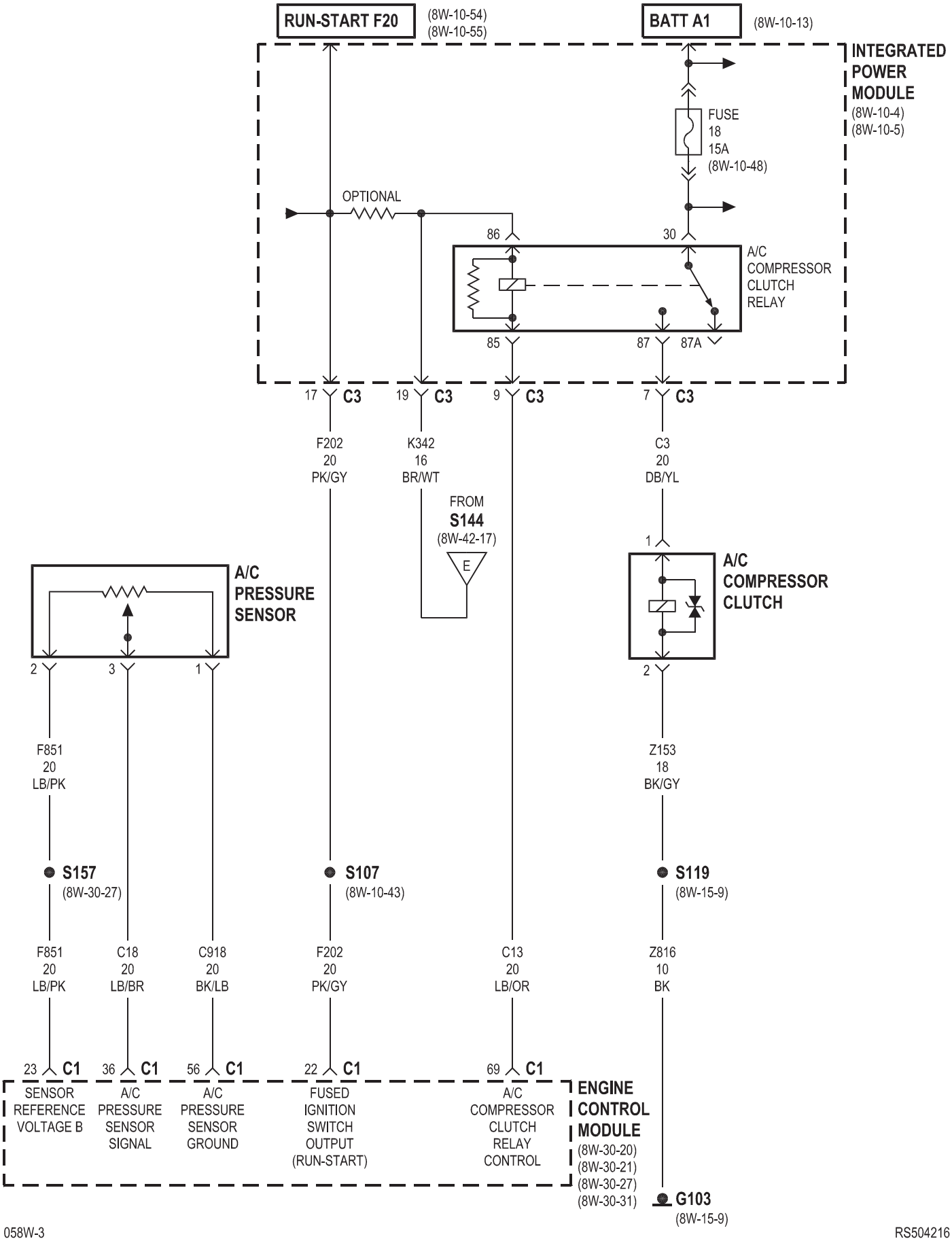
RUN-START F20
(8W-10-54)
(8W-10-55)
BATT A1
(8W-10-13)
INTEGRATED POWER MODULE
(8W-10-4)
(8W-10-5)
FUSE 18 15A
(8W-10-48)
OPTIONAL
86
30
A/C COMPRESSOR CLUTCH RELAY
85
87
87A
17 C3
19 C3
9 C3
7 C3
F202 20 PK/GY
K342 16 BR/WT
C3 20 DB/YL
FROM S144
(8W-42-17)
E
1
A/C COMPRESSOR CLUTCH
2
A/C PRESSURE SENSOR
2
3
1
F851 20 LB/PK
Z153 18 BK/GY
S157
(8W-30-27)
S107
(8W-10-43)
S119
(8W-15-9)
F851 20 LB/PK
C18 20 LB/BR
C918 20 BK/LB
F202 20 PK/GY
C13 20 LB/OR
Z816 10 BK
23 C1
36 C1
56 C1
22 C1
69 C1
SENSOR REFERENCE VOLTAGE B
A/C PRESSURE SENSOR SIGNAL
A/C PRESSURE SENSOR GROUND
FUSED IGNITION SWITCH OUTPUT (RUN-START)
A/C COMPRESSOR CLUTCH RELAY CONTROL
ENGINE CONTROL MODULE
(8W-30-20)
(8W-30-21)
(8W-30-27)
(8W-30-31)
G103
(8W-15-9)

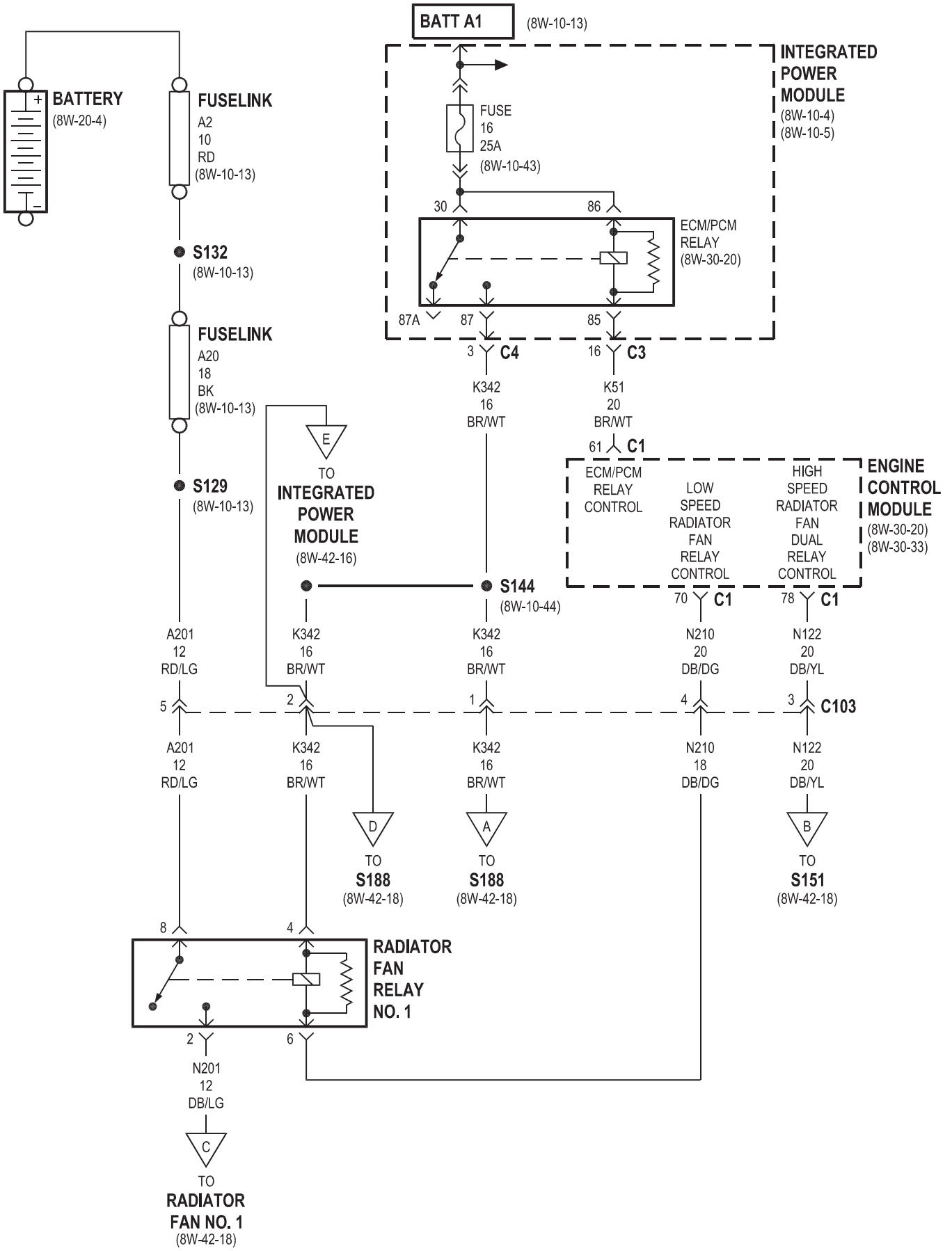
BATT A1
(8W-10-13)
INTEGRATED POWER MODULE
(8W-10-4)
(8W-10-5)
FUSE 16 25A
(8W-10-43)
30
86
ECM/PCM RELAY
(8W-30-20)
87A
87
85
3 C4
16 C3
K342 16 BR/WT
K51 20 BR/WT
61 C1
BATTERY
(8W-20-4)
FUSELINK A2 10 RD
(8W-10-13)
S132
(8W-10-13)
FUSELINK A20 18 BK
(8W-10-13)
S129
(8W-10-13)
E
TO INTEGRATED POWER MODULE
(8W-42-16)
S144
(8W-10-44)
ECM/PCM RELAY CONTROL
LOW SPEED RADIATOR FAN RELAY CONTROL
HIGH SPEED RADIATOR FAN DUAL RELAY CONTROL
ENGINE CONTROL MODULE
(8W-30-20)
(8W-30-33)
70 C1
78 C1
A201 12 RD/LG
K342 16 BR/WT
K342 16 BR/WT
N210 20 DB/DG
N122 20 DB/YL
5
2
1
4
3 C103
A201 12 RD/LG
K342 16 BR/WT
K342 16 BR/WT
N210 18 DB/DG
N122 20 DB/YL
D
TO S188
(8W-42-18)
A
TO S188
(8W-42-18)
B
TO S151
(8W-42-18)
8
4
RADIATOR FAN RELAY NO. 1
2
6
N201 12 DB/LG
C
TO RADIATOR FAN NO. 1
(8W-42-18)

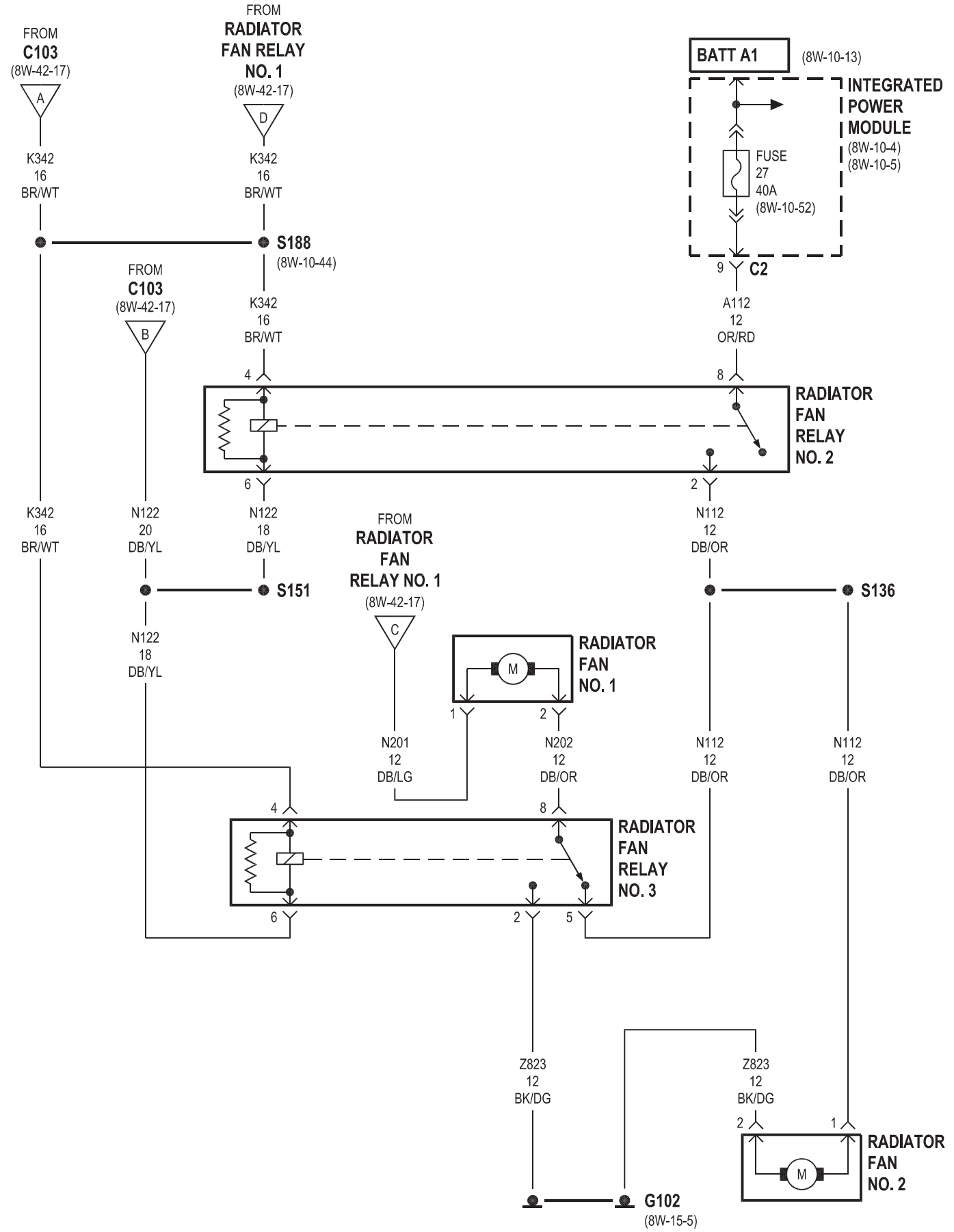
FROM
C103
(8W-42-17)
A
K342
16
BR/WT
FROM
RADIATOR
FAN RELAY
NO. 1
(8W-42-17)
D
K342
16
BR/WT
BATT A1
(8W-10-13)
INTEGRATED
POWER
MODULE
(8W-10-4)
(8W-10-5)
FUSE
27
40A
(8W-10-52)
9
C2
S188
(8W-10-44)
FROM
C103
(8W-42-17)
B
K342
16
BR/WT
A112
12
OR/RD
4
8
RADIATOR
FAN
RELAY
NO. 2
6
2
K342
16
BR/WT
N122
20
DB/YL
N122
18
DB/YL
N112
12
DB/OR
FROM
RADIATOR
FAN
RELAY NO. 1
(8W-42-17)
C
S151
S136
N122
18
DB/YL
M
RADIATOR
FAN
NO. 1
1
2
N201
12
DB/LG
N202
12
DB/OR
N112
12
DB/OR
N112
12
DB/OR
4
8
RADIATOR
FAN
RELAY
NO. 3
6
2
5
Z823
12
BK/DG
Z823
12
BK/DG
2
1
M
RADIATOR
FAN
NO. 2
G102
(8W-15-5)

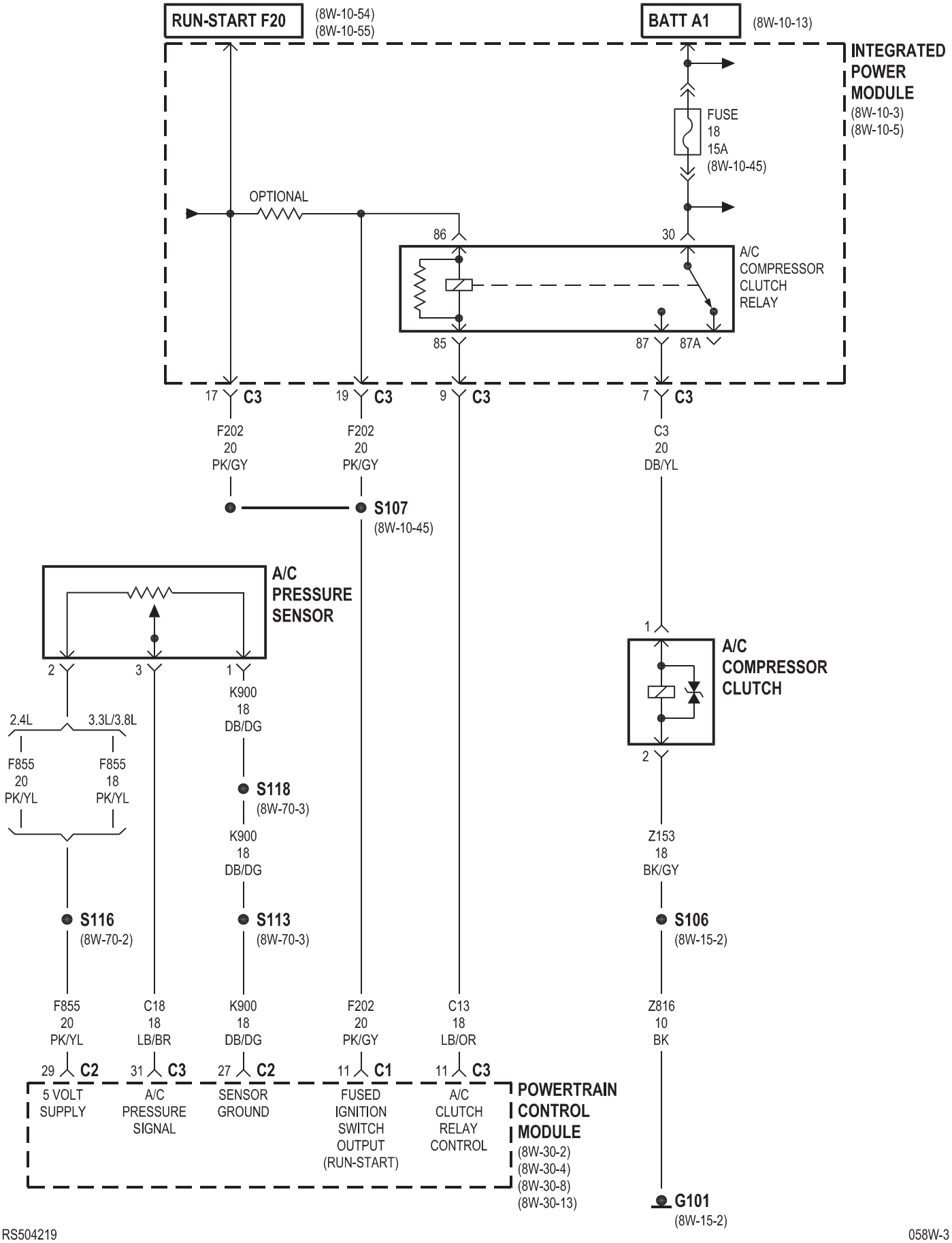
RUN-START F20
(8W-10-54)
(8W-10-55)
BATT A1
(8W-10-13)
INTEGRATED POWER MODULE
(8W-10-3)
(8W-10-5)
FUSE 18 15A
(8W-10-45)
OPTIONAL
86
30
A/C COMPRESSOR CLUTCH RELAY
85
87
87A
17 C3
19 C3
9 C3
7 C3
F202 20 PK/GY
F202 20 PK/GY
C3 20 DB/YL
S107
(8W-10-45)
A/C PRESSURE SENSOR
2
3
1
1
A/C COMPRESSOR CLUTCH
2.4L
3.3L/3.8L
F855 20 PK/YL
F855 18 PK/YL
K900 18 DB/DG
S118
(8W-70-3)
K900 18 DB/DG
Z153 18 BK/GY
S116
(8W-70-2)
S113
(8W-70-3)
S106
(8W-15-2)
F855 20 PK/YL
C18 18 LB/BR
K900 18 DB/DG
F202 20 PK/GY
C13 18 LB/OR
Z816 10 BK
29 C2
31 C3
27 C2
11 C1
11 C3
5 VOLT SUPPLY
A/C PRESSURE SIGNAL
SENSOR GROUND
FUSED IGNITION SWITCH OUTPUT (RUN-START)
A/C CLUTCH RELAY CONTROL
POWERTRAIN CONTROL MODULE
(8W-30-2)
(8W-30-4)
(8W-30-8)
(8W-30-13)
G101
(8W-15-2)

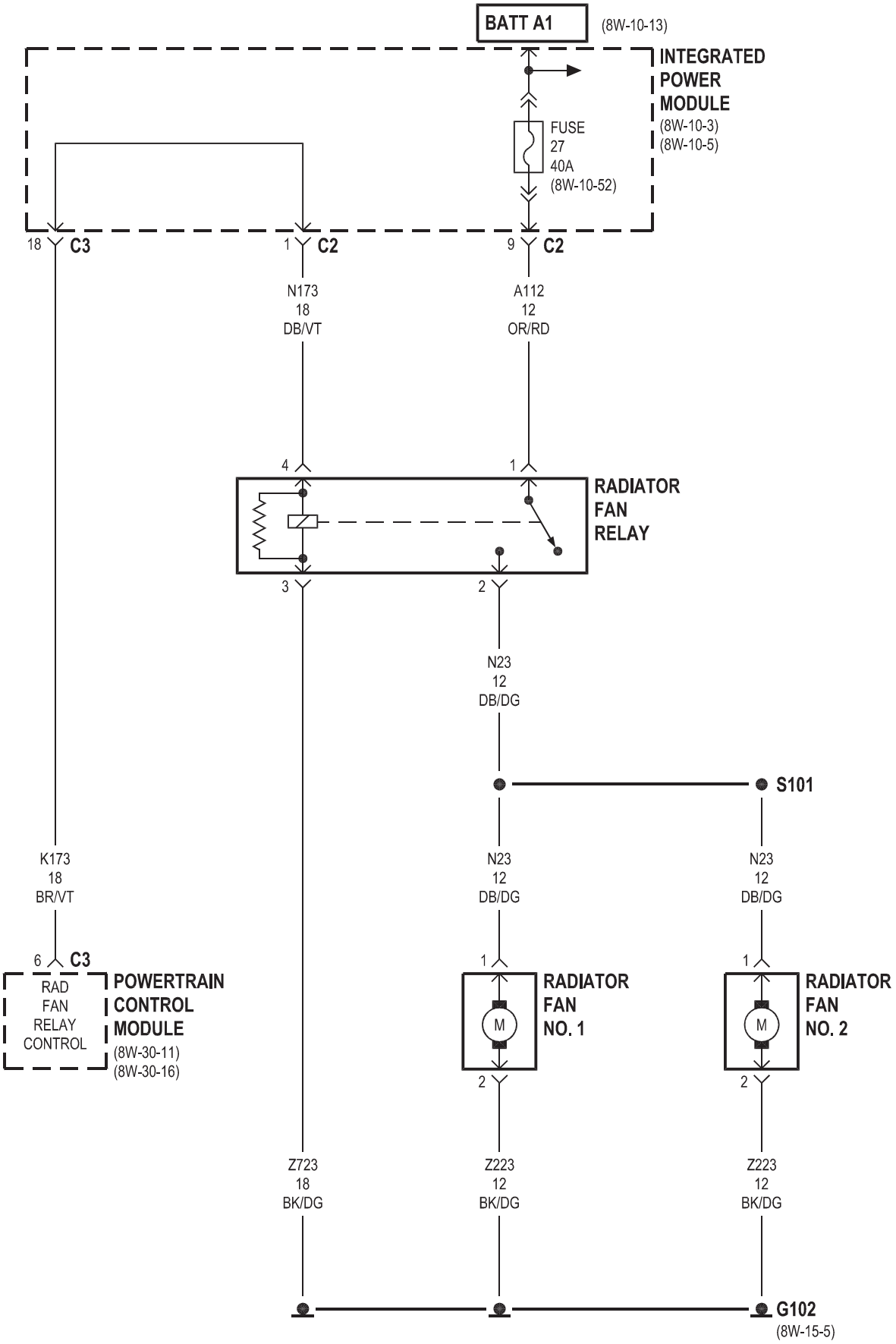
BATT A1
(8W-10-13)
INTEGRATED POWER MODULE
(8W-10-3)
(8W-10-5)
FUSE 27 40A
(8W-10-52)
18 C3
1 C2
9 C2
N173 18 DB/VT
A112 12 OR/RD
4
1
RADIATOR FAN RELAY
3
2
N23 12 DB/DG
S101
K173 18 BR/VT
N23 12 DB/DG
N23 12 DB/DG
6 C3
RAD FAN RELAY CONTROL
POWERTRAIN CONTROL MODULE
(8W-30-11)
(8W-30-16)
1
RADIATOR FAN NO. 1
M
2
1
RADIATOR FAN NO. 2
M
2
Z723 18 BK/DG
Z223 12 BK/DG
Z223 12 BK/DG
G102
(8W-15-5)

8W-43 OCCUPANT RESTRAINT SYSTEM

Component	Page
Belt Tension Sensor	8W-43-8
Clockspring	8W-43-4
Driver Airbag Squib 1	8W-43-4
Driver Airbag Squib 2	8W-43-4
Driver Knee Blocker Airbag Squib	8W-43-4
Driver Seat Belt Switch	8W-43-3
Driver Seat Belt Tensioner	8W-43-3
Front Control Module	8W-43-2, 8
G200	8W-43-2
G201	8W-43-2
G301	8W-43-8
Instrument Cluster	8W-43-2
Instrument Panel Switch Bank	8W-43-2
Integrated Power Module	8W-43-2, 8
Left Curtain Airbag Squib	8W-43-6
Left Front Impact Sensor	8W-43-6
Left Side Impact Sensor 1	8W-43-6
Left Side Impact Sensor 2	8W-43-6
Left Side Impact Sensor 3	8W-43-6
Occupant Classification Module	8W-43-2, 8
Occupant Restraint Controller	8W-43-2, 3, 4, 5, 6, 7, 8
Passenger Airbag	8W-43-5
Passenger Airbag On/Off Indicator Lamp	8W-43-2
Passenger Seat Belt Switch	8W-43-5
Passenger Seat Belt Tensioner	8W-43-5
Passenger Seat Weight Sensor	8W-43-8
Right Curtain Airbag Squib	8W-43-7
Right Front Impact Sensor	8W-43-7
Right Side Impact Sensor 1	8W-43-7
Right Side Impact Sensor 2	8W-43-7
Right Side Impact Sensor 3	8W-43-7

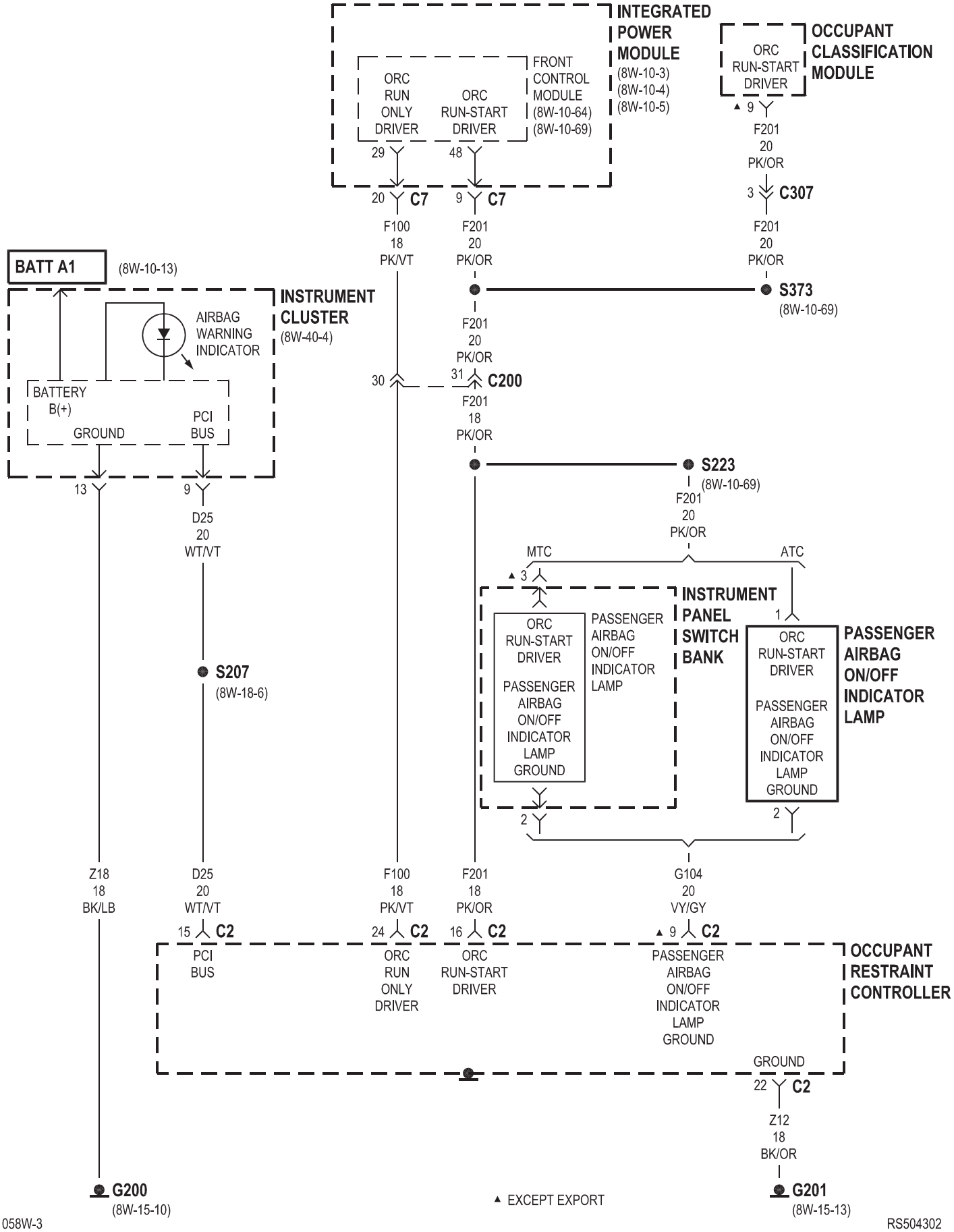
INTEGRATED POWER MODULE
(8W-10-3)
(8W-10-4)
(8W-10-5)
FRONT CONTROL MODULE
(8W-10-64)
(8W-10-69)
ORC RUN ONLY DRIVER
ORC RUN-START DRIVER
OCCUPANT CLASSIFICATION MODULE
ORC RUN-START DRIVER
▲ 9
F201
20
PK/OR
3 C307
F201
20
PK/OR
29
48
20 C7
9 C7
F100
18
PK/VT
F201
20
PK/OR
BATT A1
(8W-10-13)
INSTRUMENT CLUSTER
(8W-40-4)
AIRBAG WARNING INDICATOR
BATTERY B(+)
GROUND
PCI BUS
S373
(8W-10-69)
F201
20
PK/OR
30
31 C200
F201
18
PK/OR
S223
(8W-10-69)
F201
20
PK/OR
13
9
D25
20
WT/VT
MTC
ATC
▲ 3
1
INSTRUMENT PANEL SWITCH BANK
ORC RUN-START DRIVER
PASSENGER AIRBAG ON/OFF INDICATOR LAMP
PASSENGER AIRBAG ON/OFF INDICATOR LAMP GROUND
PASSENGER AIRBAG ON/OFF INDICATOR LAMP
ORC RUN-START DRIVER
PASSENGER AIRBAG ON/OFF INDICATOR LAMP GROUND
2
2
S207
(8W-18-6)
Z18
18
BK/LB
D25
20
WT/VT
F100
18
PK/VT
F201
18
PK/OR
G104
20
VY/GY
15 C2
24 C2
16 C2
▲ 9 C2
PCI BUS
ORC RUN ONLY DRIVER
ORC RUN-START DRIVER
PASSENGER AIRBAG ON/OFF INDICATOR LAMP GROUND
OCCUPANT RESTRAINT CONTROLLER
GROUND
22 C2
Z12
18
BK/OR
G200
(8W-15-10)
▲ EXCEPT EXPORT
G201
(8W-15-13)

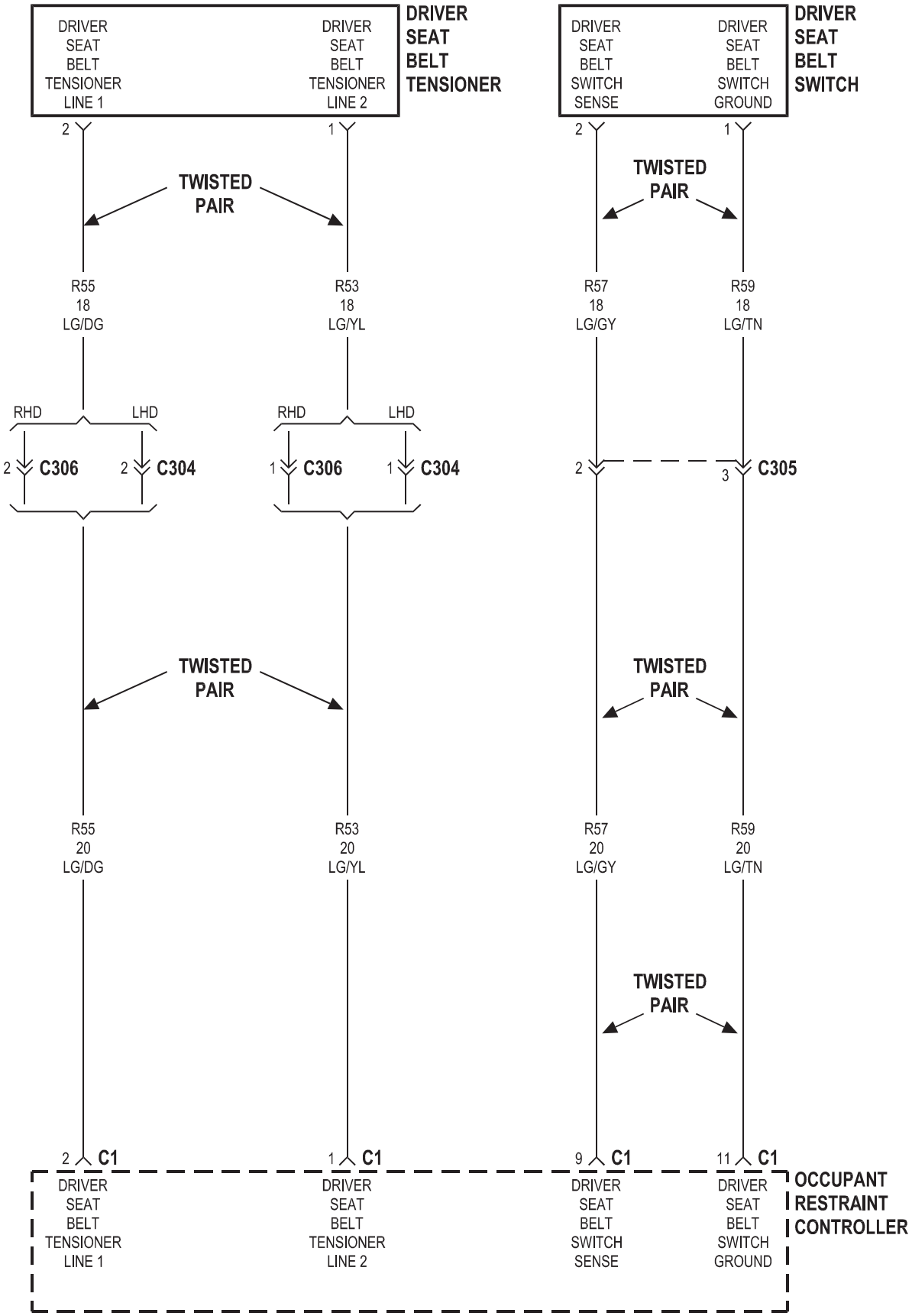
DRIVER SEAT BELT TENSIONER
DRIVER SEAT BELT TENSIONER LINE 1
DRIVER SEAT BELT TENSIONER LINE 2
DRIVER SEAT BELT SWITCH
DRIVER SEAT BELT SWITCH SENSE
DRIVER SEAT BELT SWITCH GROUND
TWISTED PAIR
R55 18 LG/DG
R53 18 LG/YL
R57 18 LG/GY
R59 18 LG/TN
RHD
LHD
C306
C304
C305
R55 20 LG/DG
R53 20 LG/YL
R57 20 LG/GY
R59 20 LG/TN
C1
OCCUPANT RESTRAINT CONTROLLER

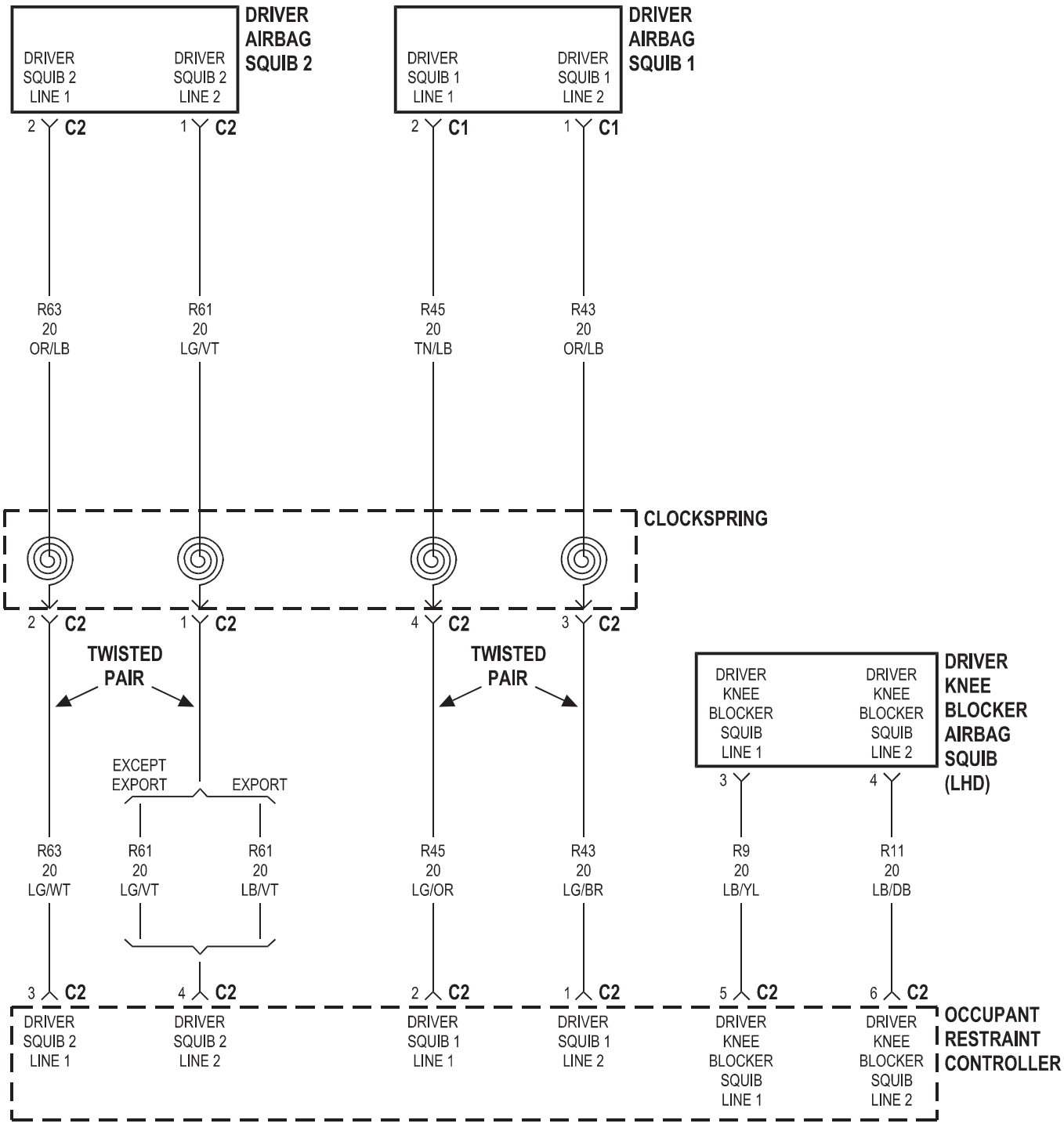
DRIVER AIRBAG SQUIB 2
DRIVER SQUIB 2 LINE 1
DRIVER SQUIB 2 LINE 2
2 C2
1 C2
DRIVER AIRBAG SQUIB 1
DRIVER SQUIB 1 LINE 1
DRIVER SQUIB 1 LINE 2
2 C1
1 C1
R63 20 OR/LB
R61 20 LG/VT
R45 20 TN/LB
R43 20 OR/LB
CLOCKSPRING
2 C2
1 C2
4 C2
3 C2
TWISTED PAIR
TWISTED PAIR
EXCEPT EXPORT
EXPORT
DRIVER KNEE BLOCKER AIRBAG SQUIB (LHD)
DRIVER KNEE BLOCKER SQUIB LINE 1
DRIVER KNEE BLOCKER SQUIB LINE 2
3
4
R63 20 LG/WT
R61 20 LG/VT
R61 20 LB/VT
R45 20 LG/OR
R43 20 LG/BR
R9 20 LB/YL
R11 20 LB/DB
3 C2
4 C2
2 C2
1 C2
5 C2
6 C2
DRIVER SQUIB 2 LINE 1
DRIVER SQUIB 2 LINE 2
DRIVER SQUIB 1 LINE 1
DRIVER SQUIB 1 LINE 2
DRIVER KNEE BLOCKER SQUIB LINE 1
DRIVER KNEE BLOCKER SQUIB LINE 2
OCCUPANT RESTRAINT CONTROLLER

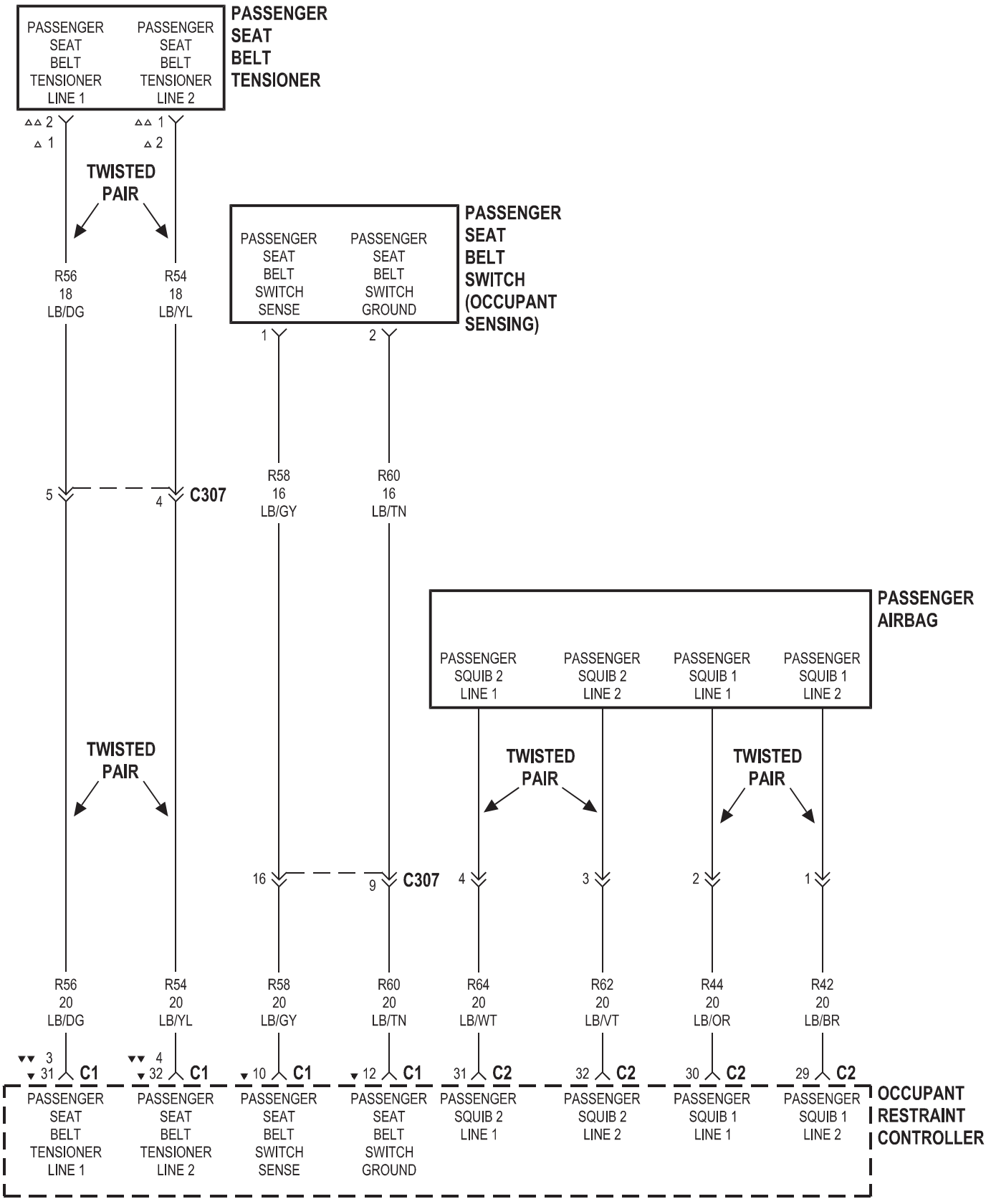
PASSENGER SEAT BELT TENSIONER
PASSENGER SEAT BELT TENSIONER LINE 1
PASSENGER SEAT BELT TENSIONER LINE 2
TWISTED PAIR
R56 18 LB/DG
R54 18 LB/YL
PASSENGER SEAT BELT SWITCH (OCCUPANT SENSING)
PASSENGER SEAT BELT SWITCH SENSE
PASSENGER SEAT BELT SWITCH GROUND
R58 16 LB/GY
R60 16 LB/TN
C307
PASSENGER AIRBAG
PASSENGER SQUIB 2 LINE 1
PASSENGER SQUIB 2 LINE 2
PASSENGER SQUIB 1 LINE 1
PASSENGER SQUIB 1 LINE 2
R64 20 LB/WT
R62 20 LB/VT
R44 20 LB/OR
R42 20 LB/BR
C1
C2
OCCUPANT RESTRAINT CONTROLLER
▼ OCCUPANT SENSING
▼▼ EXCEPT OCCUPANT SENSING
▵ EXCEPT EXPORT
▵▵ EXPORT

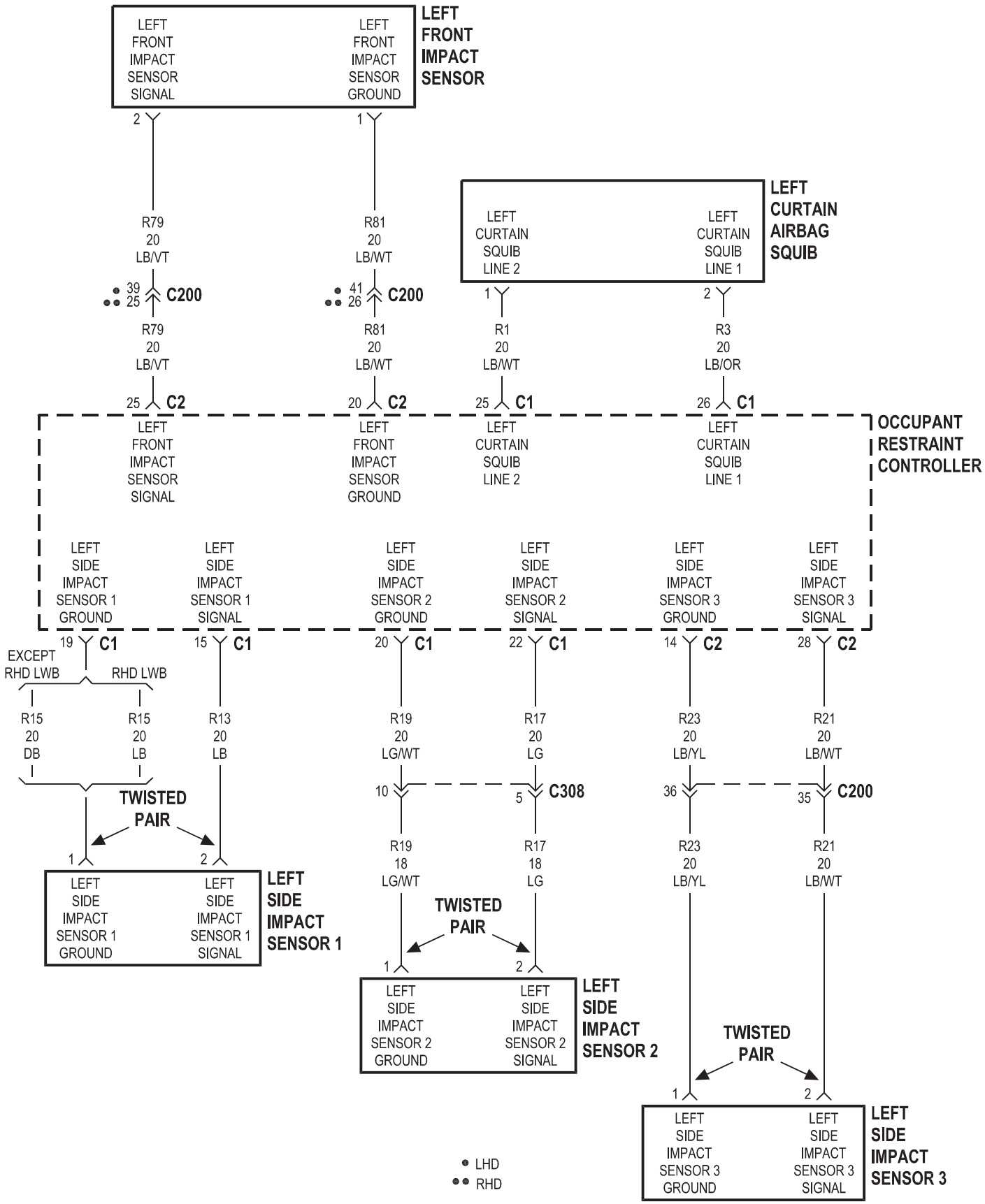
LEFT FRONT IMPACT SENSOR SIGNAL
LEFT FRONT IMPACT SENSOR GROUND
LEFT FRONT IMPACT SENSOR
2
1
R79 20 LB/VT
R81 20 LB/WT
39 25 C200
41 26 C200
R79 20 LB/VT
R81 20 LB/WT
25 C2
20 C2
LEFT CURTAIN SQUIB LINE 2
LEFT CURTAIN SQUIB LINE 1
LEFT CURTAIN AIRBAG SQUIB
1
2
R1 20 LB/WT
R3 20 LB/OR
25 C1
26 C1
LEFT FRONT IMPACT SENSOR SIGNAL
LEFT FRONT IMPACT SENSOR GROUND
LEFT CURTAIN SQUIB LINE 2
LEFT CURTAIN SQUIB LINE 1
OCCUPANT RESTRAINT CONTROLLER
LEFT SIDE IMPACT SENSOR 1 GROUND
LEFT SIDE IMPACT SENSOR 1 SIGNAL
LEFT SIDE IMPACT SENSOR 2 GROUND
LEFT SIDE IMPACT SENSOR 2 SIGNAL
LEFT SIDE IMPACT SENSOR 3 GROUND
LEFT SIDE IMPACT SENSOR 3 SIGNAL
19 C1
15 C1
20 C1
22 C1
14 C2
28 C2
EXCEPT RHD LWB
RHD LWB
R15 20 DB
R15 20 LB
R13 20 LB
R19 20 LG/WT
R17 20 LG
R23 20 LB/YL
R21 20 LB/WT
10 5 C308
36 35 C200
TWISTED PAIR
R19 18 LG/WT
R17 18 LG
R23 20 LB/YL
R21 20 LB/WT
TWISTED PAIR
TWISTED PAIR
1
2
LEFT SIDE IMPACT SENSOR 1 GROUND
LEFT SIDE IMPACT SENSOR 1 SIGNAL
LEFT SIDE IMPACT SENSOR 1
LEFT SIDE IMPACT SENSOR 2 GROUND
LEFT SIDE IMPACT SENSOR 2 SIGNAL
LEFT SIDE IMPACT SENSOR 2
LEFT SIDE IMPACT SENSOR 3 GROUND
LEFT SIDE IMPACT SENSOR 3 SIGNAL
LEFT SIDE IMPACT SENSOR 3
LHD
RHD

SIDE AIRBAG

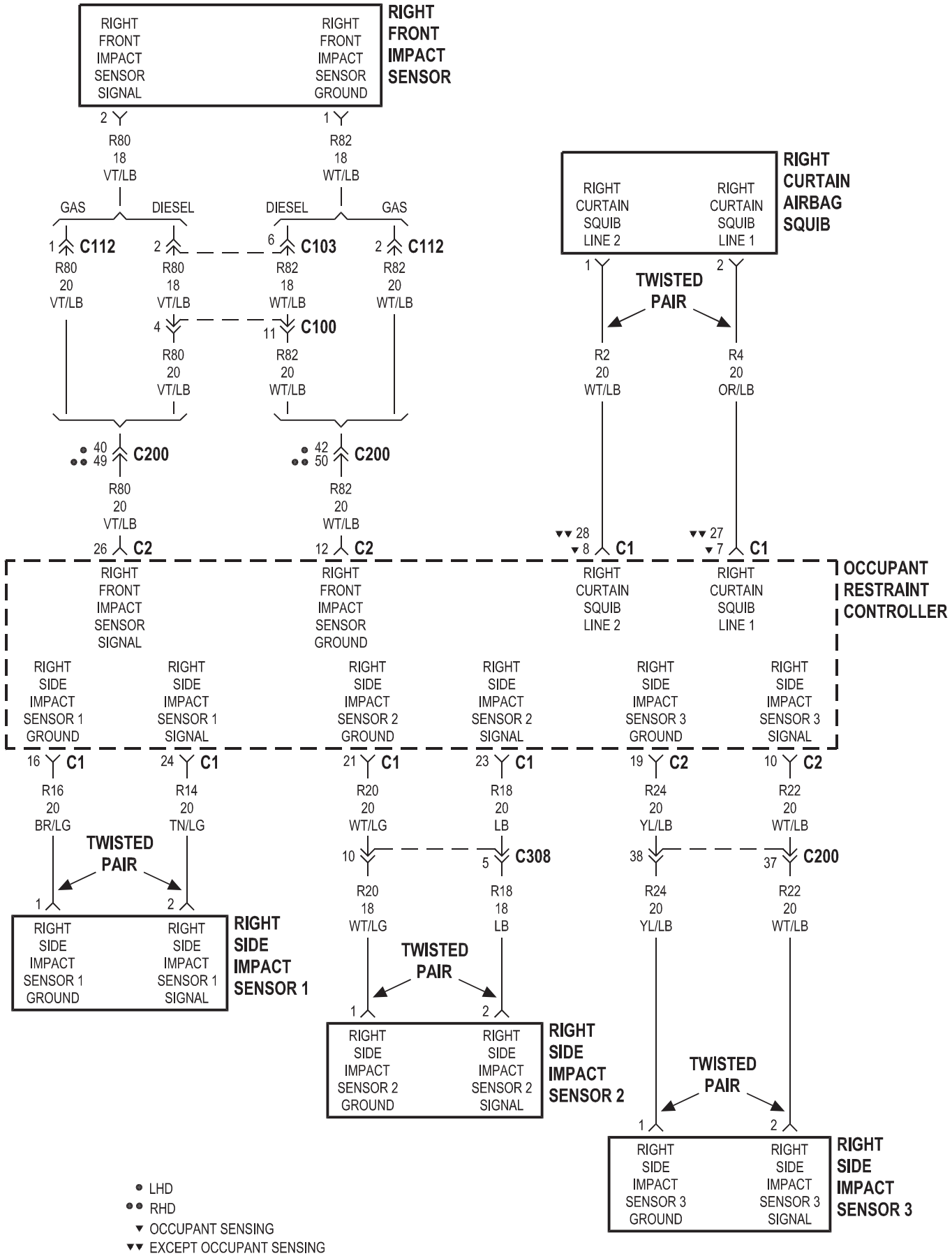
RIGHT FRONT IMPACT SENSOR SIGNAL
RIGHT FRONT IMPACT SENSOR GROUND
RIGHT FRONT IMPACT SENSOR
2
1
R80 18 VT/LB
R82 18 WT/LB
GAS
DIESEL
DIESEL
GAS
1 C112
2 C112
6 C103
2 C112
R80 20 VT/LB
R80 18 VT/LB
R82 18 WT/LB
R82 20 WT/LB
4
11 C100
R80 20 VT/LB
R82 20 WT/LB
40 49 C200
42 50 C200
R80 20 VT/LB
R82 20 WT/LB
26 C2
12 C2
RIGHT CURTAIN SQUIB LINE 2
RIGHT CURTAIN SQUIB LINE 1
RIGHT CURTAIN AIRBAG SQUIB
1
2
TWISTED PAIR
R2 20 WT/LB
R4 20 OR/LB
28 8 C1
27 7 C1
OCCUPANT RESTRAINT CONTROLLER
RIGHT FRONT IMPACT SENSOR SIGNAL
RIGHT FRONT IMPACT SENSOR GROUND
RIGHT CURTAIN SQUIB LINE 2
RIGHT CURTAIN SQUIB LINE 1
RIGHT SIDE IMPACT SENSOR 1 GROUND
RIGHT SIDE IMPACT SENSOR 1 SIGNAL
RIGHT SIDE IMPACT SENSOR 2 GROUND
RIGHT SIDE IMPACT SENSOR 2 SIGNAL
RIGHT SIDE IMPACT SENSOR 3 GROUND
RIGHT SIDE IMPACT SENSOR 3 SIGNAL
16 C1
24 C1
21 C1
23 C1
19 C2
10 C2
R16 20 BR/LG
R14 20 TN/LG
R20 20 WT/LG
R18 20 LB
R24 20 YL/LB
R22 20 WT/LB
TWISTED PAIR
10
5 C308
38
37 C200
R20 18 WT/LG
R18 18 LB
R24 20 YL/LB
R22 20 WT/LB
1
2
RIGHT SIDE IMPACT SENSOR 1 GROUND
RIGHT SIDE IMPACT SENSOR 1 SIGNAL
RIGHT SIDE IMPACT SENSOR 1
TWISTED PAIR
RIGHT SIDE IMPACT SENSOR 2 GROUND
RIGHT SIDE IMPACT SENSOR 2 SIGNAL
RIGHT SIDE IMPACT SENSOR 2
TWISTED PAIR
RIGHT SIDE IMPACT SENSOR 3 GROUND
RIGHT SIDE IMPACT SENSOR 3 SIGNAL
RIGHT SIDE IMPACT SENSOR 3
LHD
RHD
OCCUPANT SENSING
EXCEPT OCCUPANT SENSING

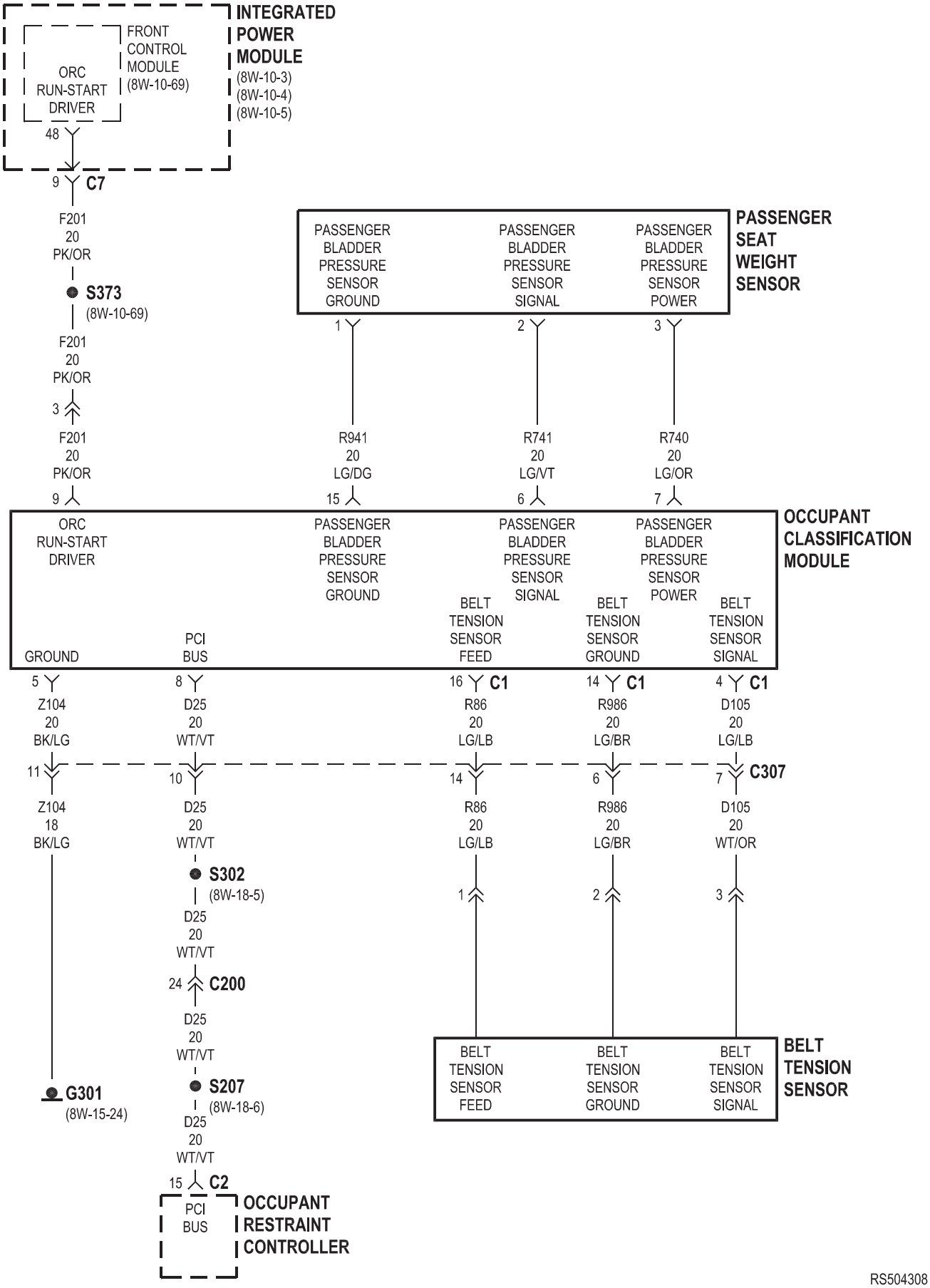
INTEGRATED POWER MODULE
(8W-10-3)
(8W-10-4)
(8W-10-5)
FRONT CONTROL MODULE
(8W-10-69)
ORC RUN-START DRIVER
48
9 C7
F201 20 PK/OR
S373
(8W-10-69)
F201 20 PK/OR
3
F201 20 PK/OR
9
PASSENGER SEAT WEIGHT SENSOR
PASSENGER BLADDER PRESSURE SENSOR GROUND
PASSENGER BLADDER PRESSURE SENSOR SIGNAL
PASSENGER BLADDER PRESSURE SENSOR POWER
1
2
3
R941 20 LG/DG
R741 20 LG/VT
R740 20 LG/OR
15
6
7
OCCUPANT CLASSIFICATION MODULE
ORC RUN-START DRIVER
PASSENGER BLADDER PRESSURE SENSOR GROUND
PASSENGER BLADDER PRESSURE SENSOR SIGNAL
PASSENGER BLADDER PRESSURE SENSOR POWER
GROUND
PCI BUS
BELT TENSION SENSOR FEED
BELT TENSION SENSOR GROUND
BELT TENSION SENSOR SIGNAL
5 Z104 20 BK/LG
8 D25 20 WT/VT
16 C1 R86 20 LG/LB
14 C1 R986 20 LG/BR
4 C1 D105 20 LG/LB
11 Z104 18 BK/LG
10 D25 20 WT/VT
14 R86 20 LG/LB
6 R986 20 LG/BR
7 C307 D105 20 WT/OR
S302
(8W-18-5)
D25 20 WT/VT
24 C200
D25 20 WT/VT
S207
(8W-18-6)
D25 20 WT/VT
15 C2
1
2
3
G301
(8W-15-24)
BELT TENSION SENSOR
BELT TENSION SENSOR FEED
BELT TENSION SENSOR GROUND
BELT TENSION SENSOR SIGNAL
PCI BUS
OCCUPANT RESTRAINT CONTROLLER

8W-44 INTERIOR LIGHTING

Component	Page
A/C-Heater Control	8W-44-8
Accessory Relay	8W-44-4
Auto Temp Control	8W-44-8
Body Control Module	8W-44-2, 3, 4, 5, 7, 8, 9, 10
Driver Door Courtesy Lamp	8W-44-2
Floor Console Lamp	8W-44-4, 5
Floor Console Power Outlet	8W-44-4
Front Control Module	8W-44-4
Front Reading Lamps/Switch	8W-44-2, 4, 5
Fuse 6	8W-44-4
G200	8W-44-7, 8
G300	8W-44-2, 8
G301	8W-44-2, 3, 5, 6
G302	8W-44-4
G303	8W-44-9, 10
Headlamp Switch	8W-44-3
Instrument Cluster	8W-44-7
Instrument Panel Switch Bank	8W-44-7
Integrated Power Module	8W-44-4
Left Liftgate Flood Lamp	8W-44-9, 10
Left Mid Reading Lamp	8W-44-3
Left Rear Reading Lamp	8W-44-3
Left Visor/Vanity Lamp	8W-44-5, 6
Overhead Console	8W-44-5
Passenger Door Courtesy Lamp	8W-44-2
Radio	8W-44-7
Rear Auto Temp Control Switch	8W-44-8
Rear Blower Rear Control Switch	8W-44-8
Rear Dome Lamp	8W-44-3, 5
Rear Power Outlet	8W-44-4
Right Liftgate Flood Lamp	8W-44-9, 10
Right Mid Reading Lamp	8W-44-3
Right Rear Reading Lamp	8W-44-3, 4
Right Visor/Vanity Lamp	8W-44-5, 6

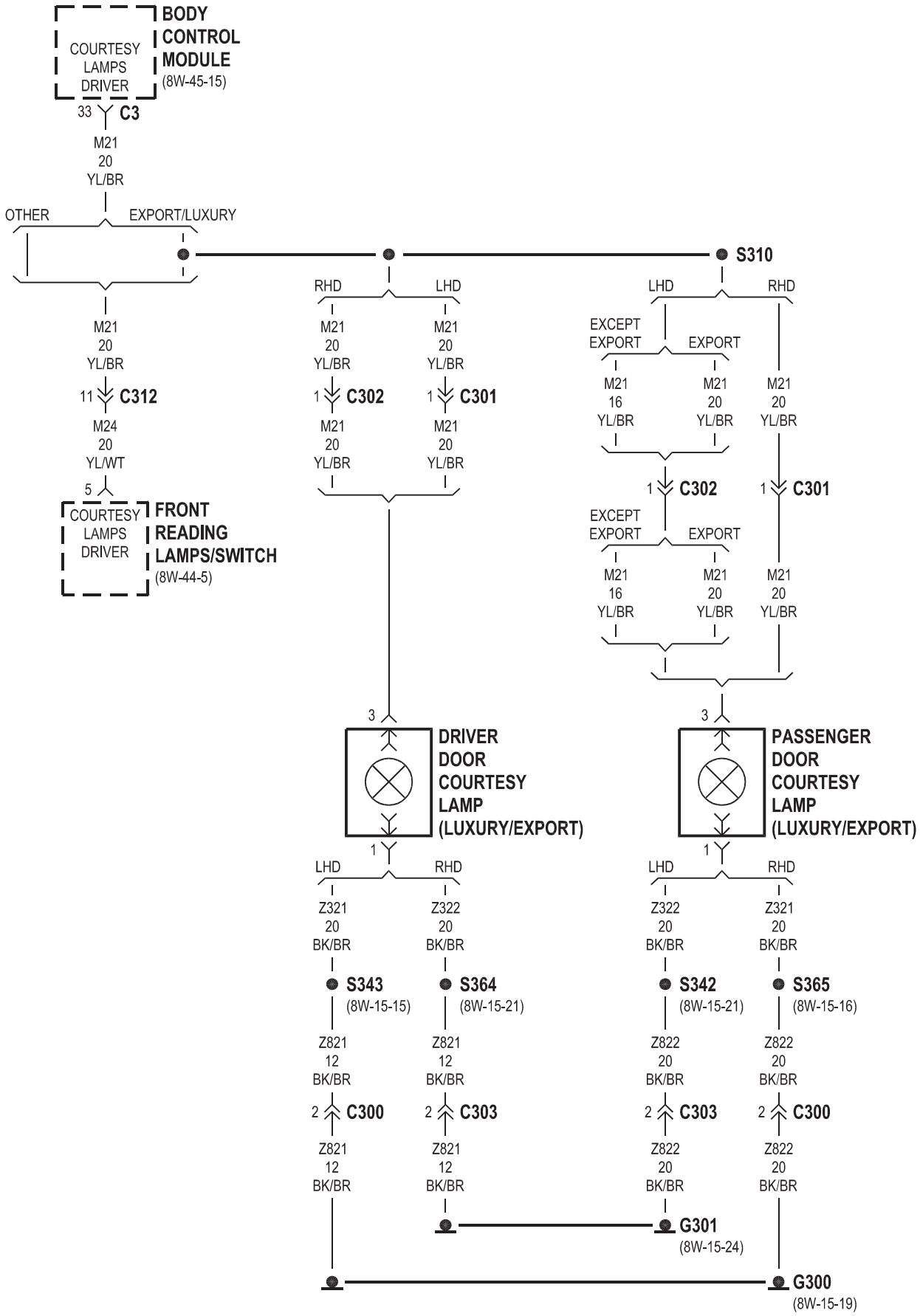
BODY CONTROL MODULE
(8W-45-15)
COURTESY LAMPS DRIVER
33 C3
M21 20 YL/BR
OTHER
EXPORT/LUXURY
S310
M21 20 YL/BR
11 C312
M24 20 YL/WT
5
COURTESY LAMPS DRIVER
FRONT READING LAMPS/SWITCH
(8W-44-5)
RHD
LHD
M21 20 YL/BR
1 C302
1 C301
EXCEPT EXPORT
EXPORT
M21 16 YL/BR
M21 20 YL/BR
3
DRIVER DOOR COURTESY LAMP (LUXURY/EXPORT)
PASSENGER DOOR COURTESY LAMP (LUXURY/EXPORT)
1
Z321 20 BK/BR
Z322 20 BK/BR
S343
(8W-15-15)
S364
(8W-15-21)
S342
(8W-15-21)
S365
(8W-15-16)
Z821 12 BK/BR
Z822 20 BK/BR
2 C300
2 C303
G301
(8W-15-24)
G300
(8W-15-19)

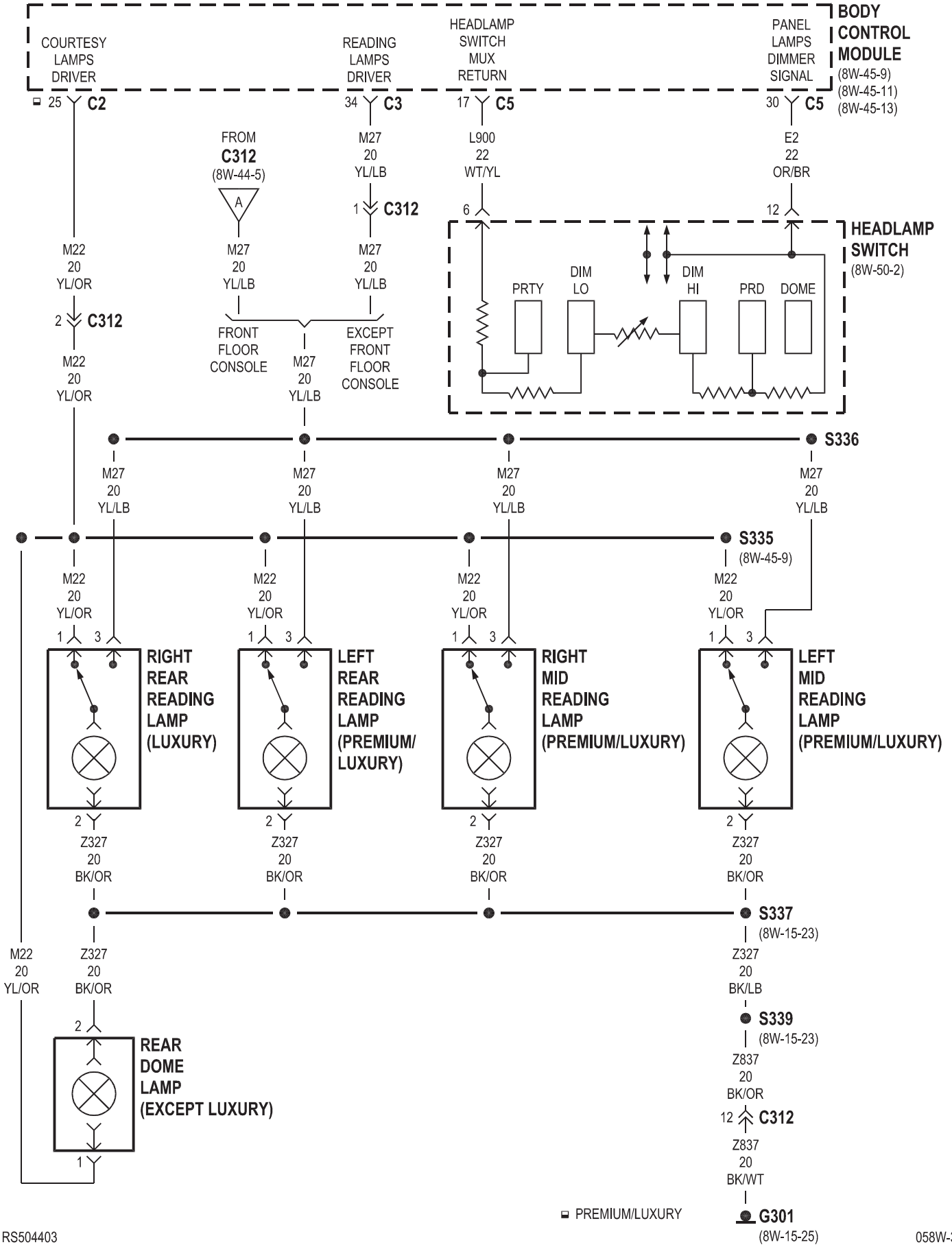
BODY CONTROL MODULE
(8W-45-9)
(8W-45-11)
(8W-45-13)
COURTESY LAMPS DRIVER
READING LAMPS DRIVER
HEADLAMP SWITCH MUX RETURN
PANEL LAMPS DIMMER SIGNAL
25 C2
34 C3
17 C5
30 C5
FROM C312 (8W-44-5)
A
M27 20 YL/LB
L900 22 WT/YL
E2 22 OR/BR
1 C312
6
12
HEADLAMP SWITCH (8W-50-2)
PRTY
DIM LO
DIM HI
PRD
DOME
M22 20 YL/OR
2 C312
FRONT FLOOR CONSOLE
EXCEPT FRONT FLOOR CONSOLE
S336
S335 (8W-45-9)
1
3
2
RIGHT REAR READING LAMP (LUXURY)
LEFT REAR READING LAMP (PREMIUM/ LUXURY)
RIGHT MID READING LAMP (PREMIUM/LUXURY)
LEFT MID READING LAMP (PREMIUM/LUXURY)
Z327 20 BK/OR
S337 (8W-15-23)
Z327 20 BK/LB
S339 (8W-15-23)
Z837 20 BK/OR
12 C312
Z837 20 BK/WT
G301 (8W-15-25)
REAR DOME LAMP (EXCEPT LUXURY)
PREMIUM/LUXURY

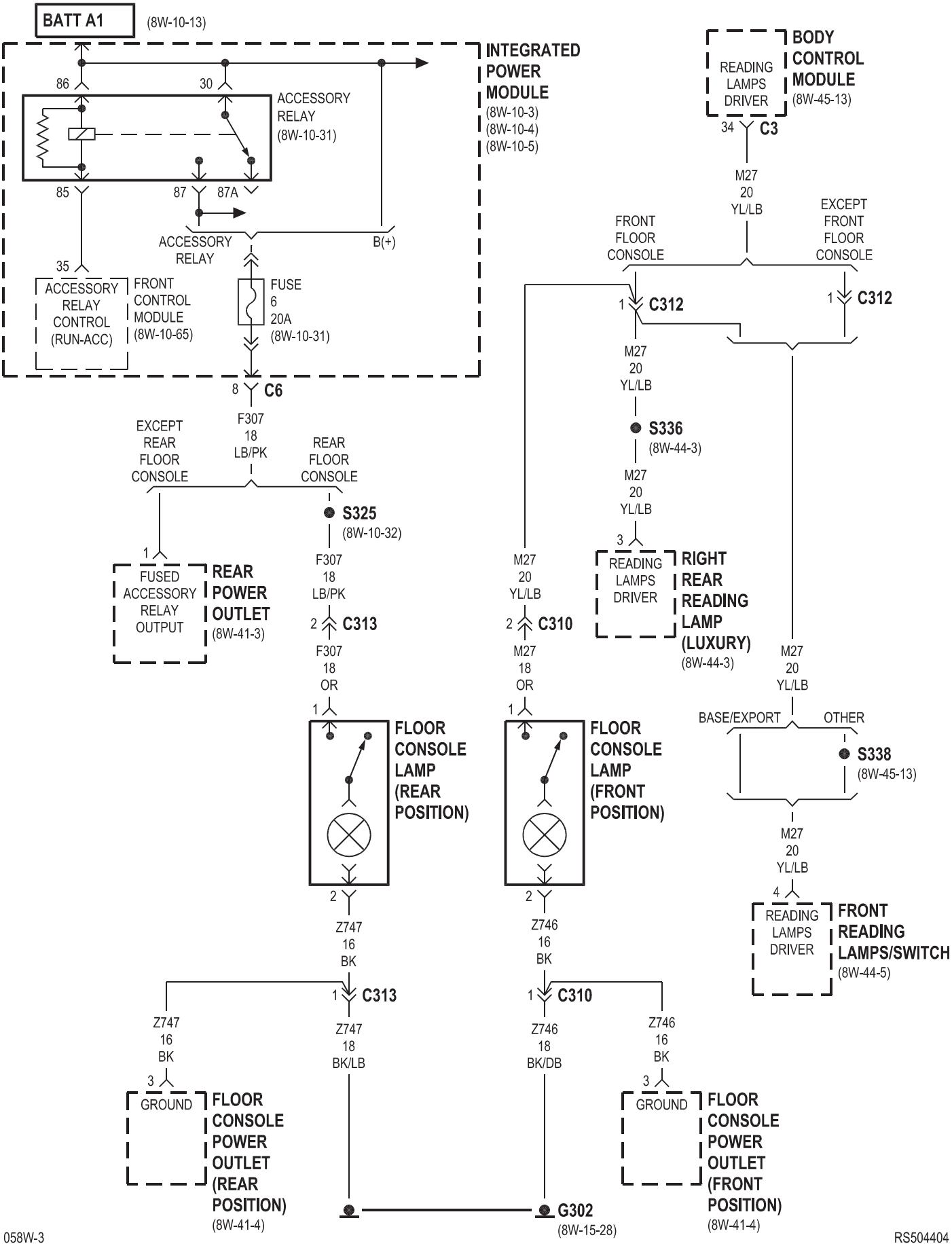
BATT A1
(8W-10-13)
INTEGRATED POWER MODULE
(8W-10-3)
(8W-10-4)
(8W-10-5)
86
30
ACCESSORY RELAY
(8W-10-31)
85
87
87A
ACCESSORY RELAY
B(+)
35
ACCESSORY RELAY CONTROL (RUN-ACC)
FRONT CONTROL MODULE
(8W-10-65)
FUSE 6 20A
(8W-10-31)
8
C6
F307
18
LB/PK
EXCEPT REAR FLOOR CONSOLE
REAR FLOOR CONSOLE
S325
(8W-10-32)
1
FUSED ACCESSORY RELAY OUTPUT
REAR POWER OUTLET
(8W-41-3)
F307
18
LB/PK
2
C313
F307
18
OR
1
FLOOR CONSOLE LAMP (REAR POSITION)
2
Z747
16
BK
1
C313
Z747
16
BK
3
GROUND
FLOOR CONSOLE POWER OUTLET (REAR POSITION)
(8W-41-4)
Z747
18
BK/LB
G302
(8W-15-28)
READING LAMPS DRIVER
BODY CONTROL MODULE
(8W-45-13)
34
C3
M27
20
YL/LB
FRONT FLOOR CONSOLE
EXCEPT FRONT FLOOR CONSOLE
1
C312
1
C312
M27
20
YL/LB
S336
(8W-44-3)
M27
20
YL/LB
3
READING LAMPS DRIVER
RIGHT REAR READING LAMP (LUXURY)
(8W-44-3)
M27
20
YL/LB
2
C310
M27
18
OR
1
FLOOR CONSOLE LAMP (FRONT POSITION)
2
Z746
16
BK
1
C310
Z746
18
BK/DB
Z746
16
BK
3
GROUND
FLOOR CONSOLE POWER OUTLET (FRONT POSITION)
(8W-41-4)
M27
20
YL/LB
BASE/EXPORT
OTHER
S338
(8W-45-13)
M27
20
YL/LB
4
READING LAMPS DRIVER
FRONT READING LAMPS/SWITCH
(8W-44-5)

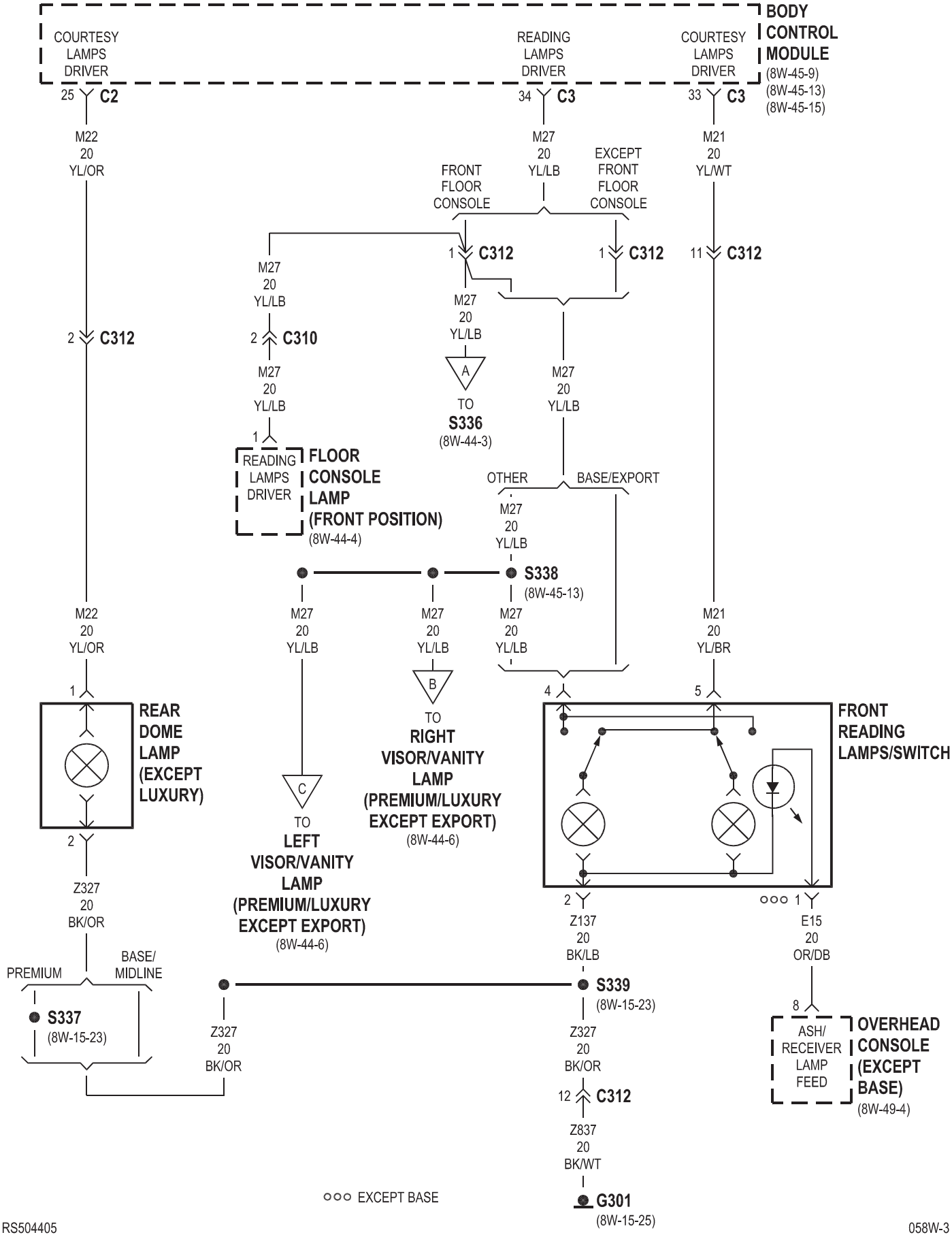
BODY CONTROL MODULE
(8W-45-9)
(8W-45-13)
(8W-45-15)
COURTESY LAMPS DRIVER
25 C2
READING LAMPS DRIVER
34 C3
COURTESY LAMPS DRIVER
33 C3
M22 20 YL/OR
M27 20 YL/LB
M21 20 YL/WT
FRONT FLOOR CONSOLE
EXCEPT FRONT FLOOR CONSOLE
1 C312
1 C312
11 C312
2 C312
2 C310
A
TO S336
(8W-44-3)
READING LAMPS DRIVER
FLOOR CONSOLE LAMP (FRONT POSITION)
(8W-44-4)
OTHER
BASE/EXPORT
S338
(8W-45-13)
M22 20 YL/OR
M27 20 YL/LB
M21 20 YL/BR
1
4
5
B
TO RIGHT VISOR/VANITY LAMP (PREMIUM/LUXURY EXCEPT EXPORT)
(8W-44-6)
REAR DOME LAMP (EXCEPT LUXURY)
FRONT READING LAMPS/SWITCH
C
TO LEFT VISOR/VANITY LAMP (PREMIUM/LUXURY EXCEPT EXPORT)
(8W-44-6)
2
Z327 20 BK/OR
2
Z137 20 BK/LB
1
E15 20 OR/DB
PREMIUM
BASE/ MIDLINE
S337
(8W-15-23)
S339
(8W-15-23)
8
ASH/ RECEIVER LAMP FEED
OVERHEAD CONSOLE (EXCEPT BASE)
(8W-49-4)
Z327 20 BK/OR
Z327 20 BK/OR
12 C312
Z837 20 BK/WT
EXCEPT BASE
G301
(8W-15-25)

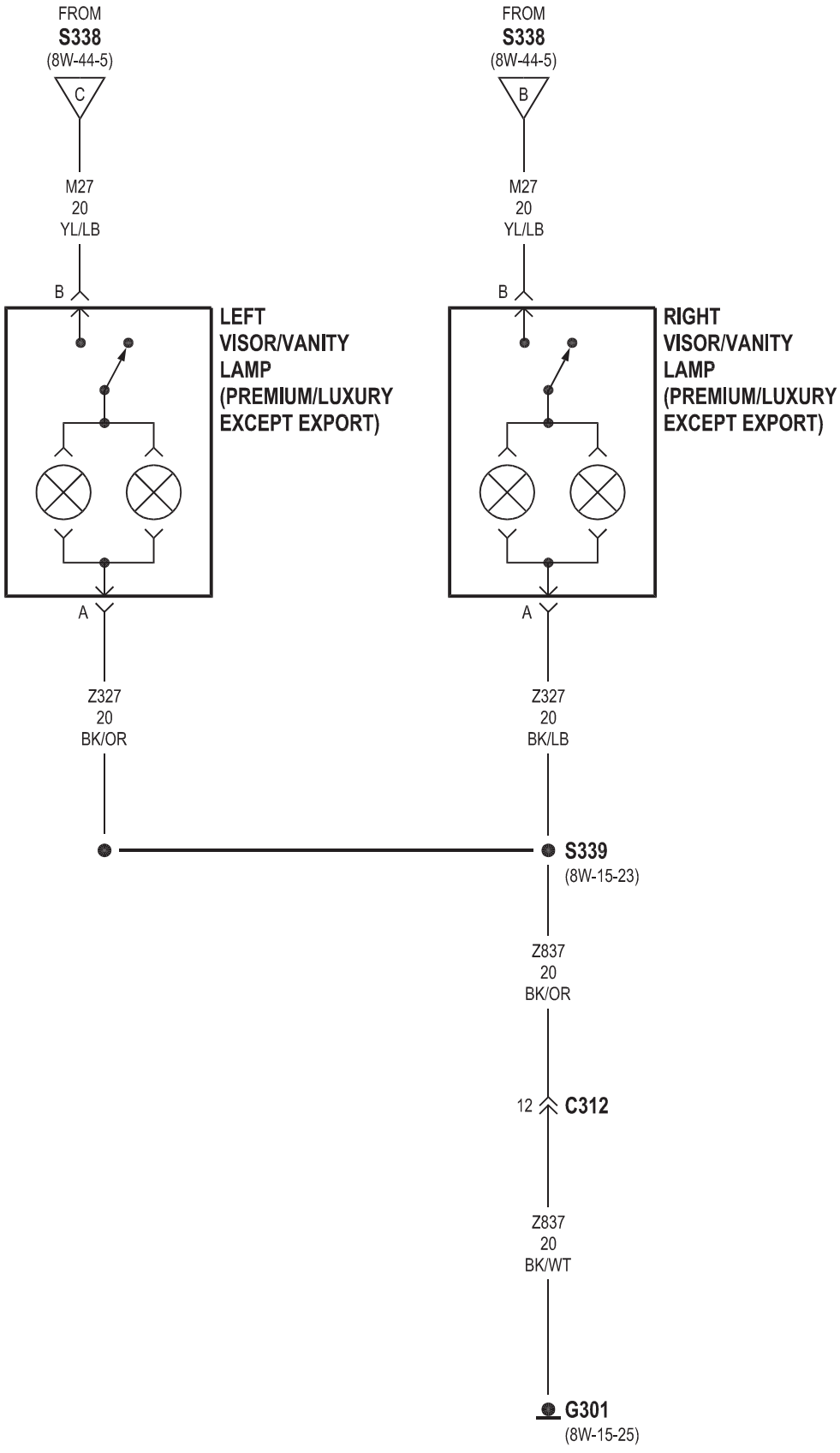
FROM
S338
(8W-44-5)
C
M27
20
YL/LB
B
LEFT
VISOR/VANITY
LAMP
(PREMIUM/LUXURY
EXCEPT EXPORT)
A
Z327
20
BK/OR
FROM
S338
(8W-44-5)
B
M27
20
YL/LB
B
RIGHT
VISOR/VANITY
LAMP
(PREMIUM/LUXURY
EXCEPT EXPORT)
A
Z327
20
BK/LB
S339
(8W-15-23)
Z837
20
BK/OR
12
C312
Z837
20
BK/WT
G301
(8W-15-25)

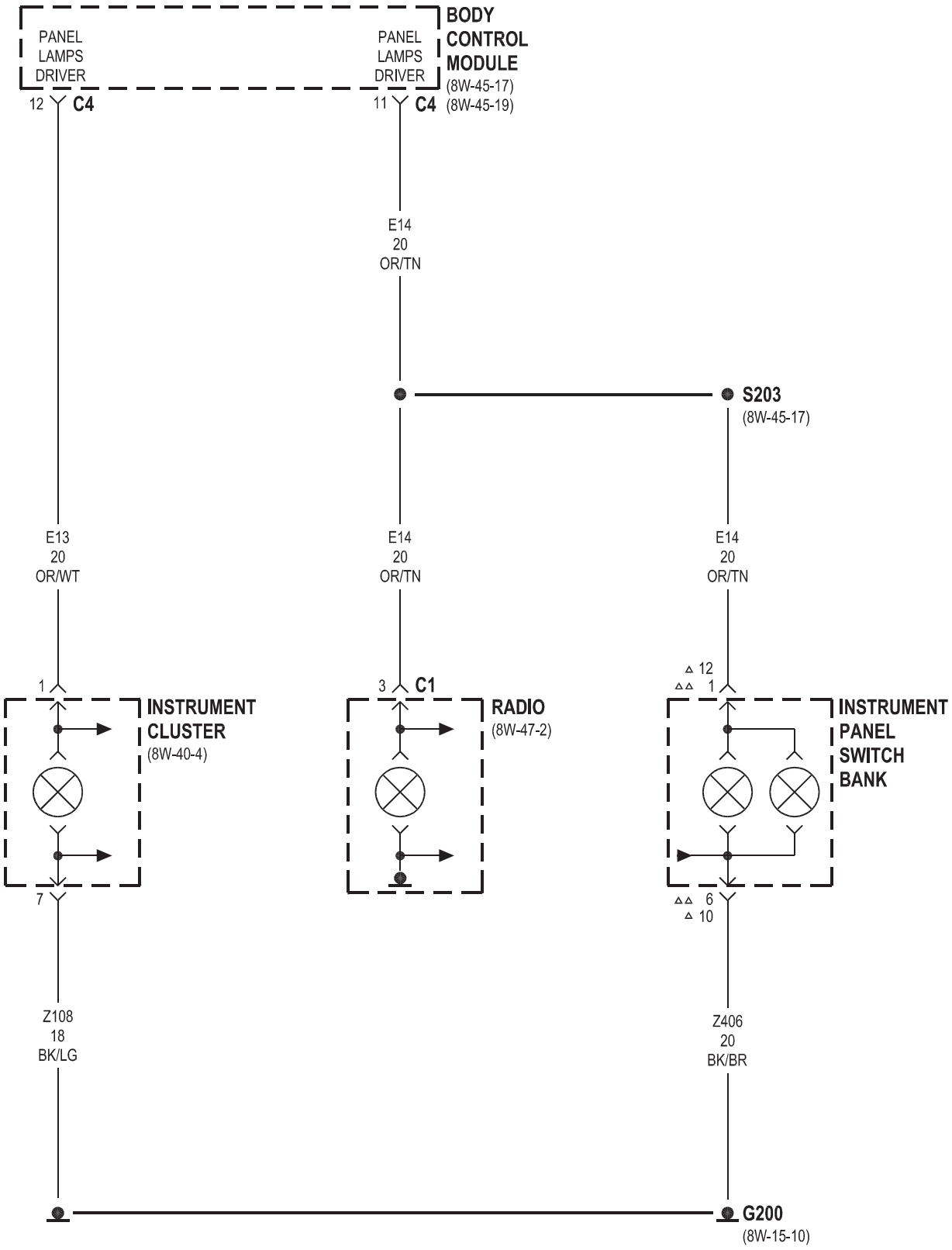

△ HEATED SEATS
△△ EXCEPT HEATED SEATS

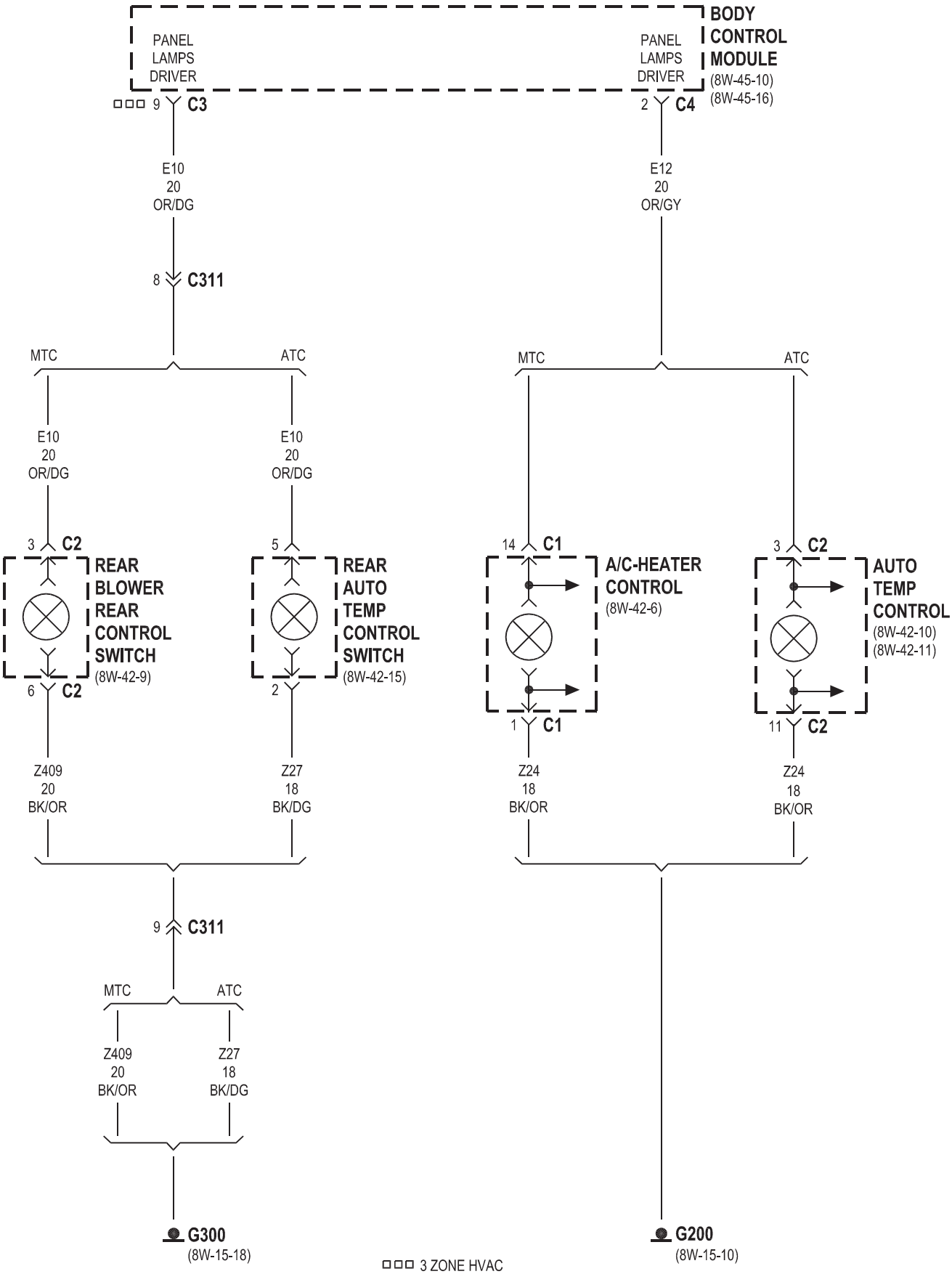
BODY CONTROL MODULE
(8W-45-10)
(8W-45-16)
PANEL LAMPS DRIVER
9 C3
2 C4
E10 20 OR/DG
E12 20 OR/GY
8 C311
MTC
ATC
3 C2
REAR BLOWER REAR CONTROL SWITCH
(8W-42-9)
6 C2
5
REAR AUTO TEMP CONTROL SWITCH
(8W-42-15)
2
14 C1
A/C-HEATER CONTROL
(8W-42-6)
1 C1
3 C2
AUTO TEMP CONTROL
(8W-42-10)
(8W-42-11)
11 C2
Z409 20 BK/OR
Z27 18 BK/DG
Z24 18 BK/OR
9 C311
G300
(8W-15-18)
G200
(8W-15-10)
3 ZONE HVAC

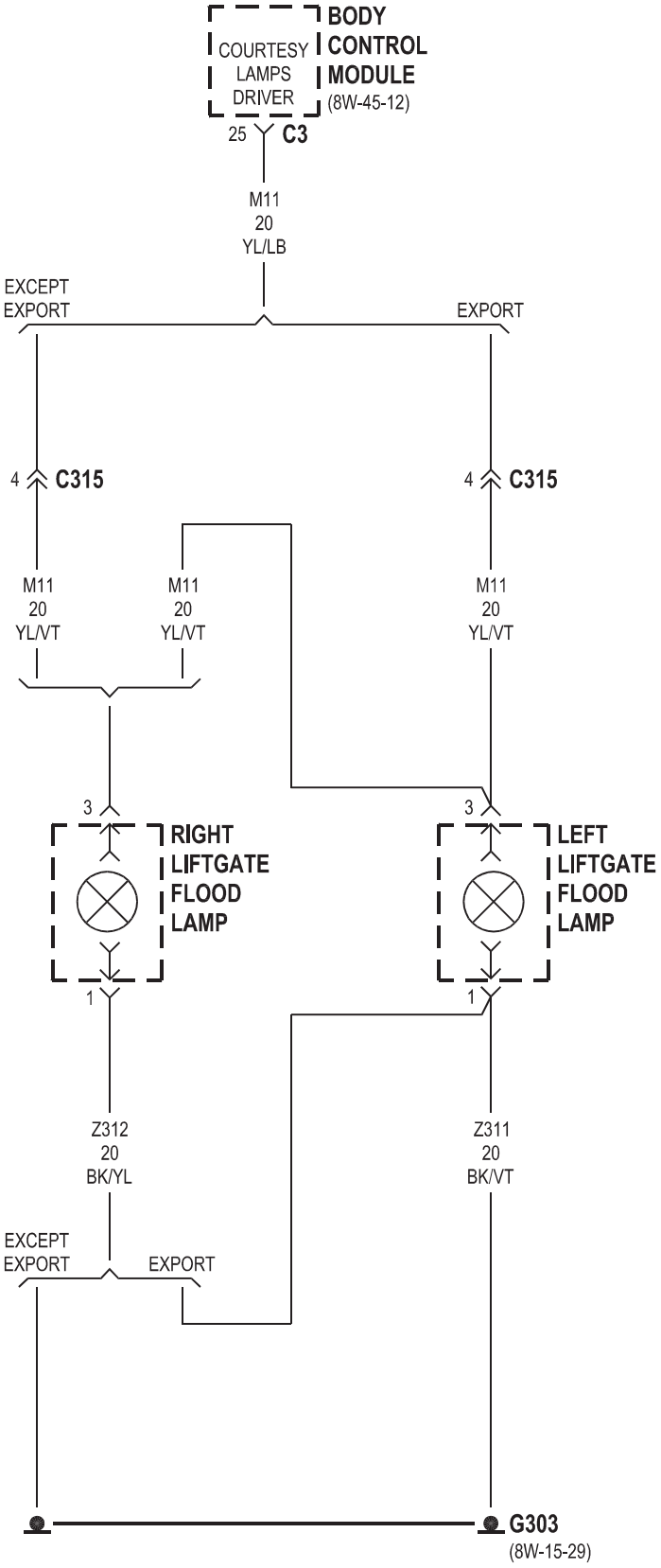
BODY CONTROL MODULE
(8W-45-12)
COURTESY LAMPS DRIVER
25
C3
M11
20
YL/LB
EXCEPT EXPORT
EXPORT
4
C315
4
C315
M11
20
YL/VT
M11
20
YL/VT
M11
20
YL/VT
3
3
RIGHT LIFTGATE FLOOD LAMP
LEFT LIFTGATE FLOOD LAMP
1
1
Z312
20
BK/YL
Z311
20
BK/VT
EXCEPT EXPORT
EXPORT
G303
(8W-15-29)

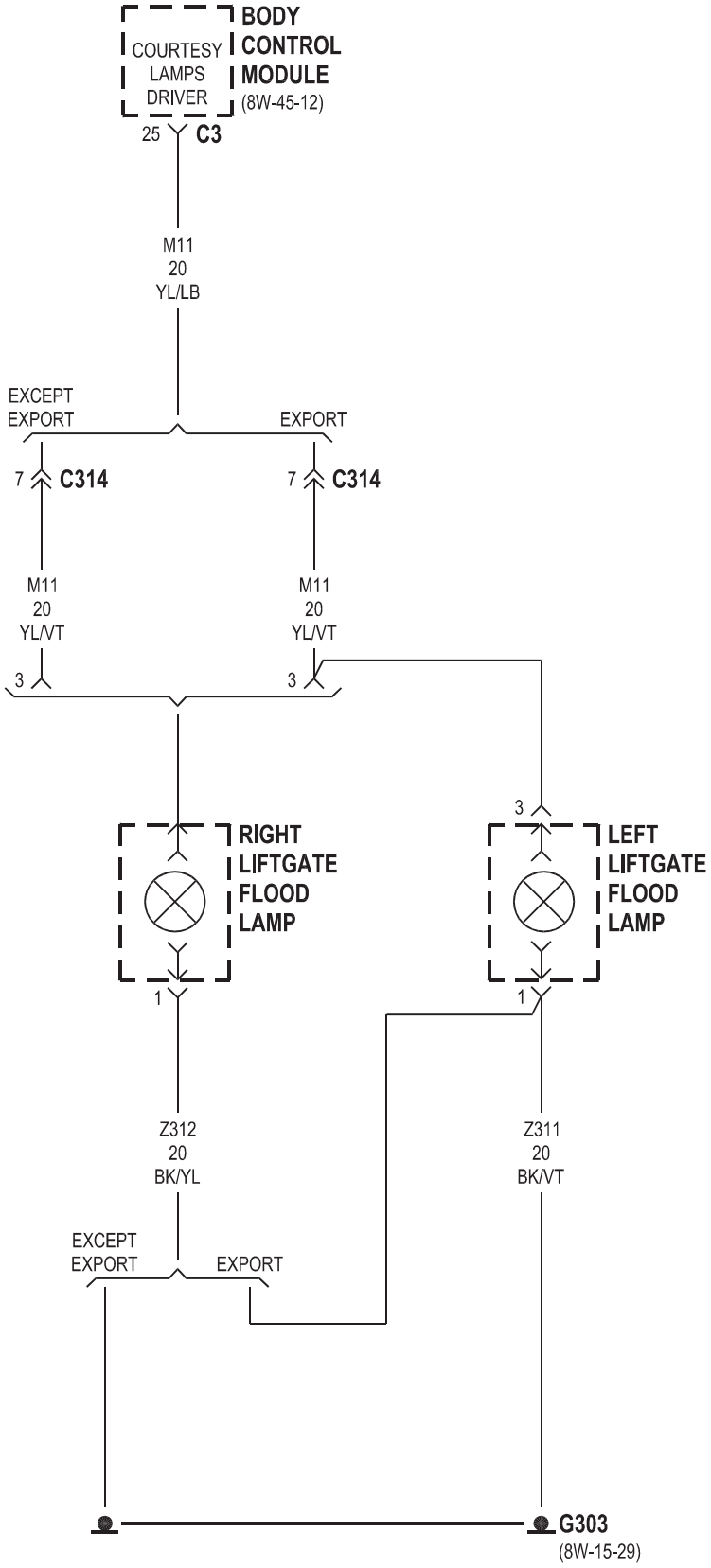
BODY CONTROL MODULE
COURTESY LAMPS DRIVER
(8W-45-12)
25
C3
M11
20
YL/LB
EXCEPT EXPORT
EXPORT
7
C314
7
C314
M11
20
YL/VT
M11
20
YL/VT
3
3
3
RIGHT LIFTGATE FLOOD LAMP
LEFT LIFTGATE FLOOD LAMP
1
1
Z312
20
BK/YL
Z311
20
BK/VT
EXCEPT EXPORT
EXPORT
G303
(8W-15-29)

8W-45 BODY CONTROL MODULE

Component	Page
A/C-Heater Control	8W-45-16, 19
Auto Temp Control	8W-45-16, 19
Body Control Module	8W-45-2, 3, 4, 5, 6, 7, 8, 9, 10, 11, 12, 13, 15, 16, 17, 18, 19, 20
Clockspring	8W-45-17
Controller Antilock Brake	8W-45-13
Driver Door Courtesy Lamp	8W-45-15
Driver Door Lock Switch	8W-45-12, 15
Driver Heated Seat Module	8W-45-11
Floor Console Lamp	8W-45-13
Front Control Module	8W-45-3
Front Reading Lamps/Switch	8W-45-13, 15
Fuel Pump Module	8W-45-15
Fuse 14	8W-45-3
Fuse 19	8W-45-2
Fuse 24	8W-45-2
G301	8W-45-2, 8
Headlamp Switch	8W-45-11, 16, 20
Hood Ajar Switch	8W-45-12
Ignition Switch	8W-45-3
Instrument Cluster	8W-45-2, 16, 18, 19
Instrument Panel Switch Bank	8W-45-10, 11, 17, 19
Integrated Power Module	8W-45-2, 3, 5, 6, 13
Left B-Pillar Switch	8W-45-9
Left Cylinder Lock Switch	8W-45-10
Left Front Door Ajar Switch	8W-45-9
Left Front Door Lock Motor/Ajar Switch	8W-45-7, 9
Left Liftgate Flood Lamp	8W-45-12
Left Mid Reading Lamp	8W-45-9, 14
Left Power Mirror	8W-45-20
Left Rear Lamp Assembly	8W-45-5, 6
Left Rear Reading Lamp	8W-45-9, 14
Left Remote Radio Switch	8W-45-17
Left Repeater Lamp	8W-45-20
Left Sliding Door Control Module	8W-45-8, 10
Left Sliding Door Lock Motor	8W-45-7
Left Sliding Door Lock Motor/Ajar Switch	8W-45-7, 8
Left Visor/Vanity Lamp	8W-45-13
License Lamp	8W-45-8
Liftgate Ajar Switch	8W-45-12
Liftgate Cinch/Release Motor	8W-45-12
Memory Set Switch	8W-45-4
Message Center	8W-45-18
Multi-Function Switch	8W-45-16
Overhead Console	8W-45-4, 11
Passenger Door Courtesy Lamp	8W-45-15
Passenger Door Lock Switch	8W-45-12, 15
Passenger Folding Mirror Relay	8W-45-20
Passenger Heated Seat Module	8W-45-11
Power Folding Mirror Switch	8W-45-20
Power Liftgate Module	8W-45-8, 12
Radio	8W-45-17
Rear Auto Temp Control Switch	8W-45-10, 19
Rear Blower Rear Control Switch	8W-45-10
Rear Dome Lamp	8W-45-9
Rear View Mirror	8W-45-11
Rear Wiper Motor	8W-45-8
Right B-Pillar Switch	8W-45-9
Right Cylinder Lock Switch	8W-45-10
Right Front Door Ajar Switch	8W-45-9
Right Front Door Lock Motor/Ajar Switch	8W-45-7, 9
Right Liftgate Flood Lamp	8W-45-12
Right Mid Reading Lamp	8W-45-9, 14
Right Power Mirror	8W-45-20
Right Rear Lamp Assembly	8W-45-5, 6
Right Rear Reading Lamp	8W-45-9, 14
Right Remote Radio Switch	8W-45-17
Right Repeater Lamp	8W-45-20
Right Sliding Door Control Module	8W-45-8, 10
Right Sliding Door Lock Motor	8W-45-7
Right Sliding Door Lock Motor/Ajar Switch	8W-45-7, 8
Right Visor/Vanity Lamp	8W-45-13
Sentry Key Remote Entry Module	8W-45-3
Thatcham Alarm Module	8W-45-10
Traction Control Switch	8W-45-17
Trailer Tow Connector	8W-45-5

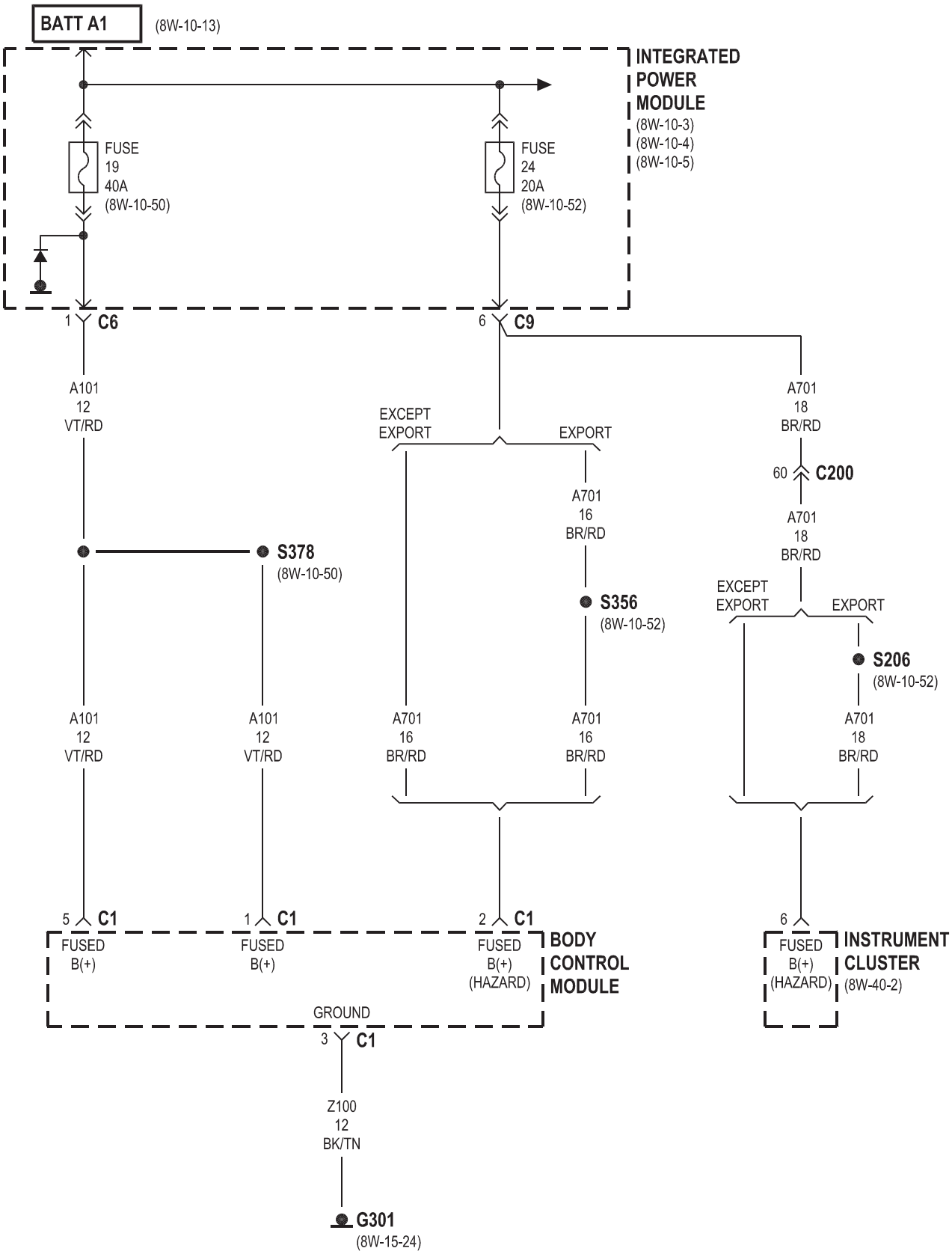
BATT A1
(8W-10-13)
INTEGRATED POWER MODULE
(8W-10-3)
(8W-10-4)
(8W-10-5)
FUSE 19 40A (8W-10-50)
FUSE 24 20A (8W-10-52)
1 C6
6 C9
A101 12 VT/RD
EXCEPT EXPORT
EXPORT
A701 18 BR/RD
60 C200
A701 16 BR/RD
A701 18 BR/RD
S378
(8W-10-50)
S356
(8W-10-52)
EXCEPT EXPORT
EXPORT
S206
(8W-10-52)
A101 12 VT/RD
A101 12 VT/RD
A701 16 BR/RD
A701 16 BR/RD
A701 18 BR/RD
5 C1
1 C1
2 C1
6
FUSED B(+)
FUSED B(+)
FUSED B(+) (HAZARD)
BODY CONTROL MODULE
FUSED B(+) (HAZARD)
INSTRUMENT CLUSTER
(8W-40-2)
GROUND
3 C1
Z100 12 BK/TN
G301
(8W-15-24)

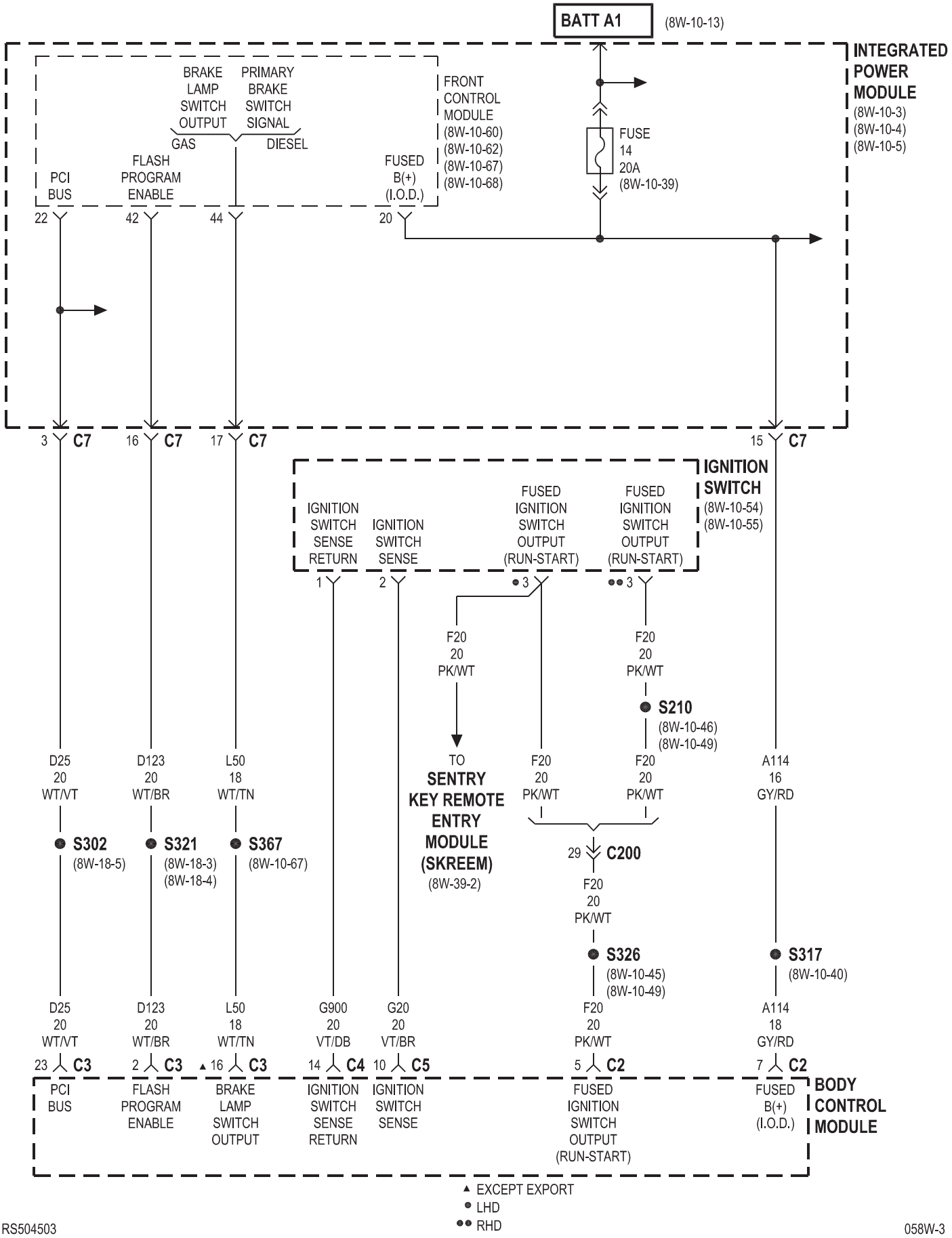
BATT A1
(8W-10-13)
INTEGRATED POWER MODULE
(8W-10-3)
(8W-10-4)
(8W-10-5)
FRONT CONTROL MODULE
(8W-10-60)
(8W-10-62)
(8W-10-67)
(8W-10-68)
BRAKE LAMP SWITCH OUTPUT
GAS
PRIMARY BRAKE SWITCH SIGNAL
DIESEL
PCI BUS
FLASH PROGRAM ENABLE
FUSED B(+) (I.O.D.)
FUSE 14 20A (8W-10-39)
22
42
44
20
3 C7
16 C7
17 C7
15 C7
IGNITION SWITCH
(8W-10-54)
(8W-10-55)
IGNITION SWITCH SENSE RETURN
IGNITION SWITCH SENSE
FUSED IGNITION SWITCH OUTPUT (RUN-START)
FUSED IGNITION SWITCH OUTPUT (RUN-START)
1
2
• 3
•• 3
F20 20 PK/WT
F20 20 PK/WT
S210
(8W-10-46)
(8W-10-49)
TO SENTRY KEY REMOTE ENTRY MODULE (SKREEM)
(8W-39-2)
F20 20 PK/WT
F20 20 PK/WT
A114 16 GY/RD
29 C200
F20 20 PK/WT
S326
(8W-10-45)
(8W-10-49)
S317
(8W-10-40)
D25 20 WT/VT
D123 20 WT/BR
L50 18 WT/TN
S302
(8W-18-5)
S321
(8W-18-3)
(8W-18-4)
S367
(8W-10-67)
D25 20 WT/VT
D123 20 WT/BR
L50 18 WT/TN
G900 20 VT/DB
G20 20 VT/BR
F20 20 PK/WT
A114 18 GY/RD
23 C3
2 C3
▲ 16 C3
14 C4
10 C5
5 C2
7 C2
PCI BUS
FLASH PROGRAM ENABLE
BRAKE LAMP SWITCH OUTPUT
IGNITION SWITCH SENSE RETURN
IGNITION SWITCH SENSE
FUSED IGNITION SWITCH OUTPUT (RUN-START)
FUSED B(+) (I.O.D.)
BODY CONTROL MODULE
▲ EXCEPT EXPORT
• LHD
•• RHD

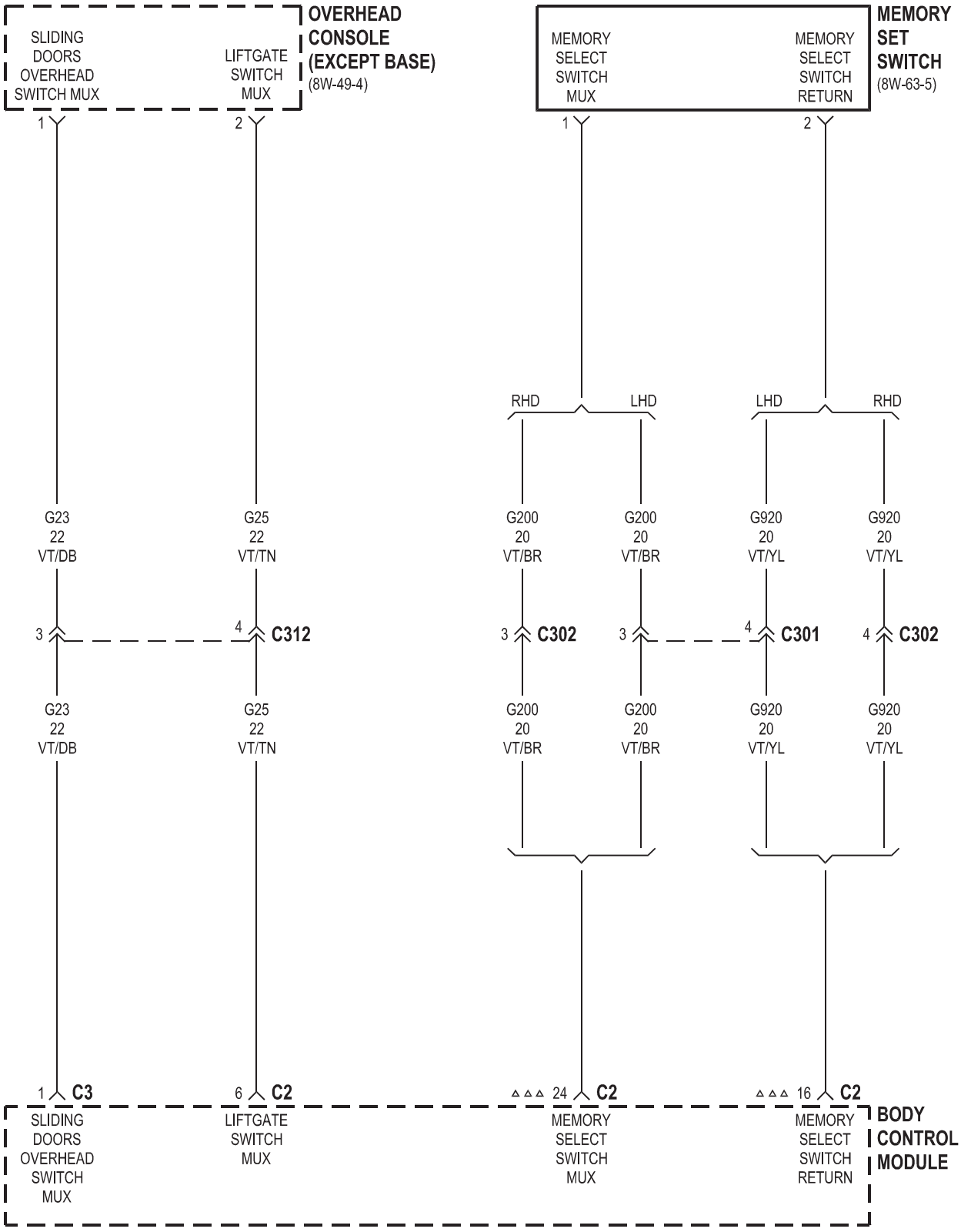
OVERHEAD CONSOLE (EXCEPT BASE)
(8W-49-4)
SLIDING DOORS OVERHEAD SWITCH MUX
LIFTGATE SWITCH MUX
MEMORY SET SWITCH
(8W-63-5)
MEMORY SELECT SWITCH MUX
MEMORY SELECT SWITCH RETURN
1
2
RHD
LHD
LHD
RHD
G23 22 VT/DB
G25 22 VT/TN
G200 20 VT/BR
G200 20 VT/BR
G920 20 VT/YL
G920 20 VT/YL
3
4
C312
3
C302
3
4
C301
4
C302
G23 22 VT/DB
G25 22 VT/TN
G200 20 VT/BR
G200 20 VT/BR
G920 20 VT/YL
G920 20 VT/YL
1
C3
6
C2
24
C2
16
C2
SLIDING DOORS OVERHEAD SWITCH MUX
LIFTGATE SWITCH MUX
MEMORY SELECT SWITCH MUX
MEMORY SELECT SWITCH RETURN
BODY CONTROL MODULE
△△△ MEMORY

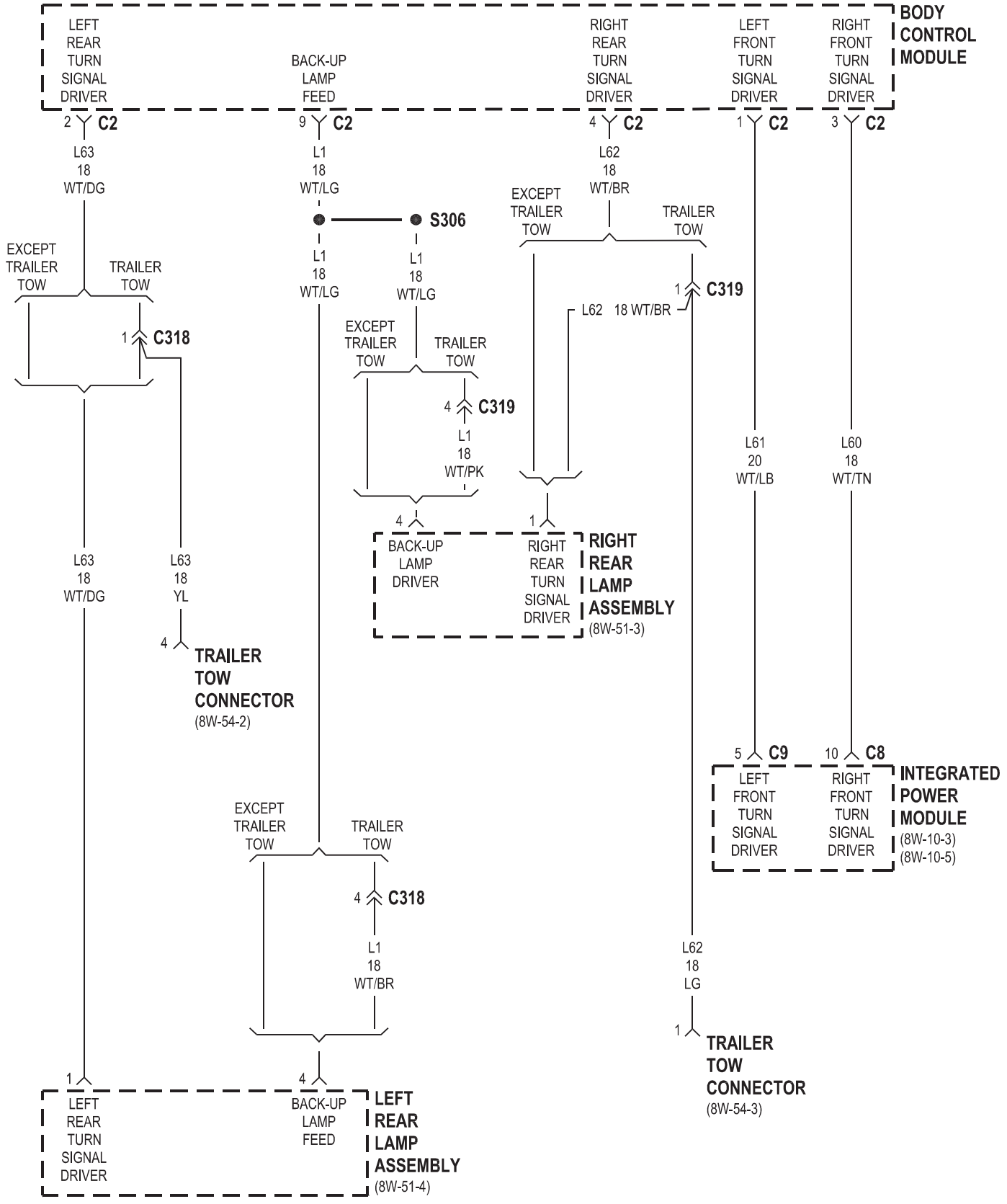
BODY CONTROL MODULE
LEFT REAR TURN SIGNAL DRIVER
BACK-UP LAMP FEED
RIGHT REAR TURN SIGNAL DRIVER
LEFT FRONT TURN SIGNAL DRIVER
RIGHT FRONT TURN SIGNAL DRIVER
2 C2
9 C2
4 C2
1 C2
3 C2
L63 18 WT/DG
L1 18 WT/LG
L62 18 WT/BR
L61 20 WT/LB
L60 18 WT/TN
S306
EXCEPT TRAILER TOW
TRAILER TOW
1 C318
1 C319
4 C319
L62 18 WT/BR
L1 18 WT/PK
L63 18 YL
4 TRAILER TOW CONNECTOR (8W-54-2)
BACK-UP LAMP DRIVER
RIGHT REAR TURN SIGNAL DRIVER
RIGHT REAR LAMP ASSEMBLY (8W-51-3)
5 C9
10 C8
INTEGRATED POWER MODULE (8W-10-3) (8W-10-5)
4 C318
L62 18 LG
1 TRAILER TOW CONNECTOR (8W-54-3)
LEFT REAR TURN SIGNAL DRIVER
LEFT REAR LAMP ASSEMBLY (8W-51-4)

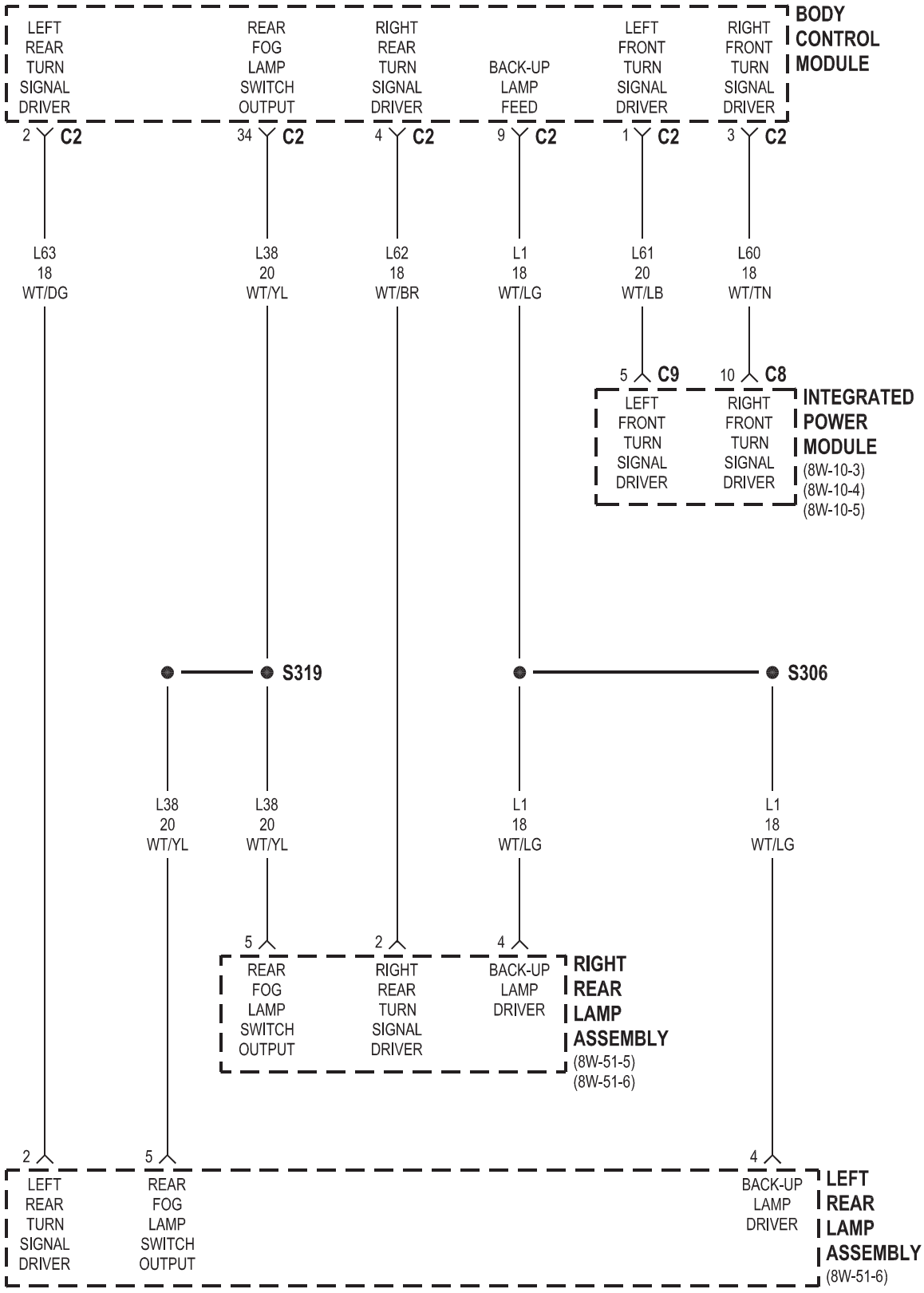
BODY CONTROL MODULE
LEFT REAR TURN SIGNAL DRIVER
REAR FOG LAMP SWITCH OUTPUT
RIGHT REAR TURN SIGNAL DRIVER
BACK-UP LAMP FEED
LEFT FRONT TURN SIGNAL DRIVER
RIGHT FRONT TURN SIGNAL DRIVER
2 C2
34 C2
4 C2
9 C2
1 C2
3 C2
L63 18 WT/DG
L38 20 WT/YL
L62 18 WT/BR
L1 18 WT/LG
L61 20 WT/LB
L60 18 WT/TN
5 C9
10 C8
INTEGRATED POWER MODULE
(8W-10-3)
(8W-10-4)
(8W-10-5)
S319
S306
L38 20 WT/YL
L38 20 WT/YL
L1 18 WT/LG
L1 18 WT/LG
5
2
4
RIGHT REAR LAMP ASSEMBLY
(8W-51-5)
(8W-51-6)
2
5
4
LEFT REAR LAMP ASSEMBLY
(8W-51-6)

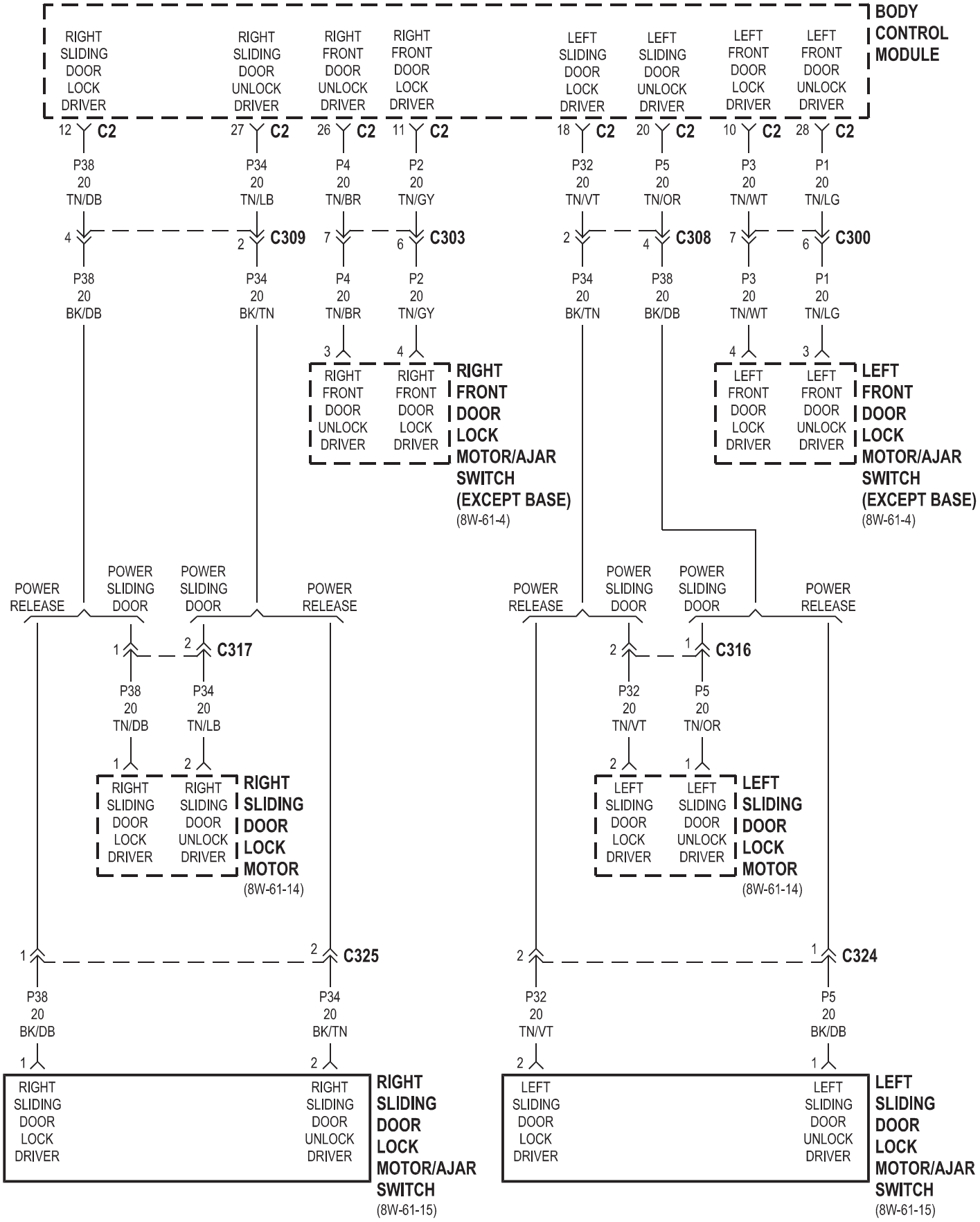
BODY CONTROL MODULE
RIGHT SLIDING DOOR LOCK DRIVER
RIGHT SLIDING DOOR UNLOCK DRIVER
RIGHT FRONT DOOR UNLOCK DRIVER
RIGHT FRONT DOOR LOCK DRIVER
LEFT SLIDING DOOR LOCK DRIVER
LEFT SLIDING DOOR UNLOCK DRIVER
LEFT FRONT DOOR LOCK DRIVER
LEFT FRONT DOOR UNLOCK DRIVER
12 C2
27 C2
26 C2
11 C2
18 C2
20 C2
10 C2
28 C2
P38 20 TN/DB
P34 20 TN/LB
P4 20 TN/BR
P2 20 TN/GY
P32 20 TN/VT
P5 20 TN/OR
P3 20 TN/WT
P1 20 TN/LG
4
2 C309
7
6 C303
2
4 C308
7
6 C300
P38 20 BK/DB
P34 20 BK/TN
P4 20 TN/BR
P2 20 TN/GY
P34 20 BK/TN
P38 20 BK/DB
P3 20 TN/WT
P1 20 TN/LG
3
4
4
3
RIGHT FRONT DOOR UNLOCK DRIVER
RIGHT FRONT DOOR LOCK DRIVER
RIGHT FRONT DOOR LOCK MOTOR/AJAR SWITCH (EXCEPT BASE)
(8W-61-4)
LEFT FRONT DOOR LOCK DRIVER
LEFT FRONT DOOR UNLOCK DRIVER
LEFT FRONT DOOR LOCK MOTOR/AJAR SWITCH (EXCEPT BASE)
(8W-61-4)
POWER RELEASE
POWER SLIDING DOOR
POWER SLIDING DOOR
POWER RELEASE
POWER RELEASE
POWER SLIDING DOOR
POWER SLIDING DOOR
POWER RELEASE
1
2 C317
2
1 C316
P38 20 TN/DB
P34 20 TN/LB
P32 20 TN/VT
P5 20 TN/OR
1
2
2
1
RIGHT SLIDING DOOR LOCK DRIVER
RIGHT SLIDING DOOR UNLOCK DRIVER
RIGHT SLIDING DOOR LOCK MOTOR
(8W-61-14)
LEFT SLIDING DOOR LOCK DRIVER
LEFT SLIDING DOOR UNLOCK DRIVER
LEFT SLIDING DOOR LOCK MOTOR
(8W-61-14)
1
2 C325
2
1 C324
P38 20 BK/DB
P34 20 BK/TN
P32 20 TN/VT
P5 20 BK/DB
1
2
2
1
RIGHT SLIDING DOOR LOCK DRIVER
RIGHT SLIDING DOOR UNLOCK DRIVER
RIGHT SLIDING DOOR LOCK MOTOR/AJAR SWITCH
(8W-61-15)
LEFT SLIDING DOOR LOCK DRIVER
LEFT SLIDING DOOR UNLOCK DRIVER
LEFT SLIDING DOOR LOCK MOTOR/AJAR SWITCH
(8W-61-15)

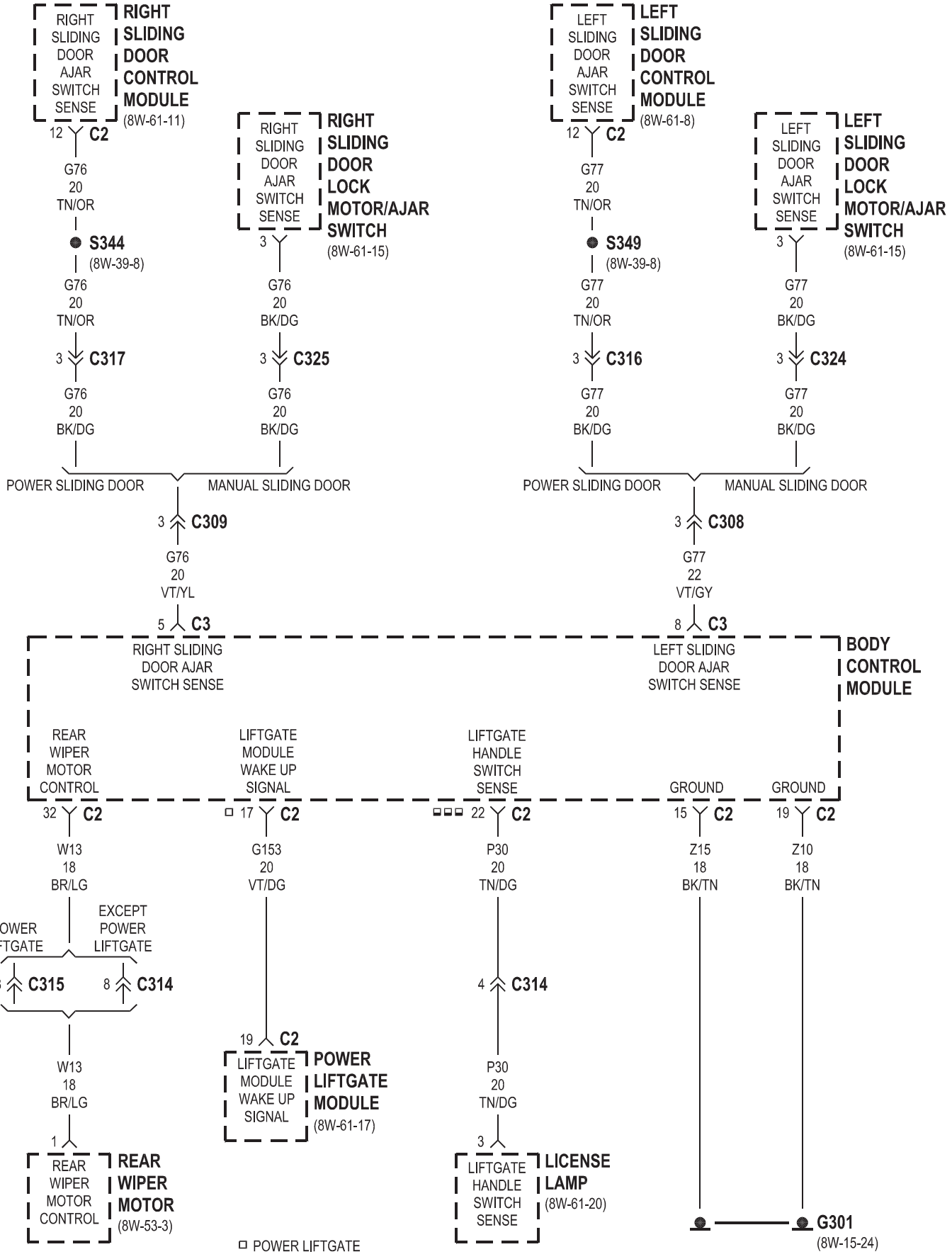
RIGHT SLIDING DOOR AJAR SWITCH SENSE
RIGHT SLIDING DOOR CONTROL MODULE
(8W-61-11)
12 C2
G76 20 TN/OR
S344
(8W-39-8)
G76 20 TN/OR
3 C317
G76 20 BK/DG
RIGHT SLIDING DOOR AJAR SWITCH SENSE
RIGHT SLIDING DOOR LOCK MOTOR/AJAR SWITCH
(8W-61-15)
3
G76 20 BK/DG
3 C325
G76 20 BK/DG
POWER SLIDING DOOR
MANUAL SLIDING DOOR
3 C309
G76 20 VT/YL
5 C3
RIGHT SLIDING DOOR AJAR SWITCH SENSE
LEFT SLIDING DOOR AJAR SWITCH SENSE
(8W-61-8)
12 C2
G77 20 TN/OR
S349
(8W-39-8)
G77 20 TN/OR
3 C316
G77 20 BK/DG
LEFT SLIDING DOOR AJAR SWITCH SENSE
LEFT SLIDING DOOR LOCK MOTOR/AJAR SWITCH
(8W-61-15)
3
G77 20 BK/DG
3 C324
G77 20 BK/DG
POWER SLIDING DOOR
MANUAL SLIDING DOOR
3 C308
G77 22 VT/GY
8 C3
LEFT SLIDING DOOR AJAR SWITCH SENSE
BODY CONTROL MODULE
REAR WIPER MOTOR CONTROL
32 C2
W13 18 BR/LG
POWER LIFTGATE
EXCEPT POWER LIFTGATE
8 C315
8 C314
W13 18 BR/LG
1
REAR WIPER MOTOR CONTROL
REAR WIPER MOTOR
(8W-53-3)
LIFTGATE MODULE WAKE UP SIGNAL
17 C2
G153 20 VT/DG
19 C2
LIFTGATE MODULE WAKE UP SIGNAL
POWER LIFTGATE MODULE
(8W-61-17)
LIFTGATE HANDLE SWITCH SENSE
22 C2
P30 20 TN/DG
4 C314
P30 20 TN/DG
3
LIFTGATE HANDLE SWITCH SENSE
LICENSE LAMP
(8W-61-20)
GROUND
15 C2
Z15 18 BK/TN
GROUND
19 C2
Z10 18 BK/TN
G301
(8W-15-24)
POWER LIFTGATE
EXCEPT MANUAL RELEASE

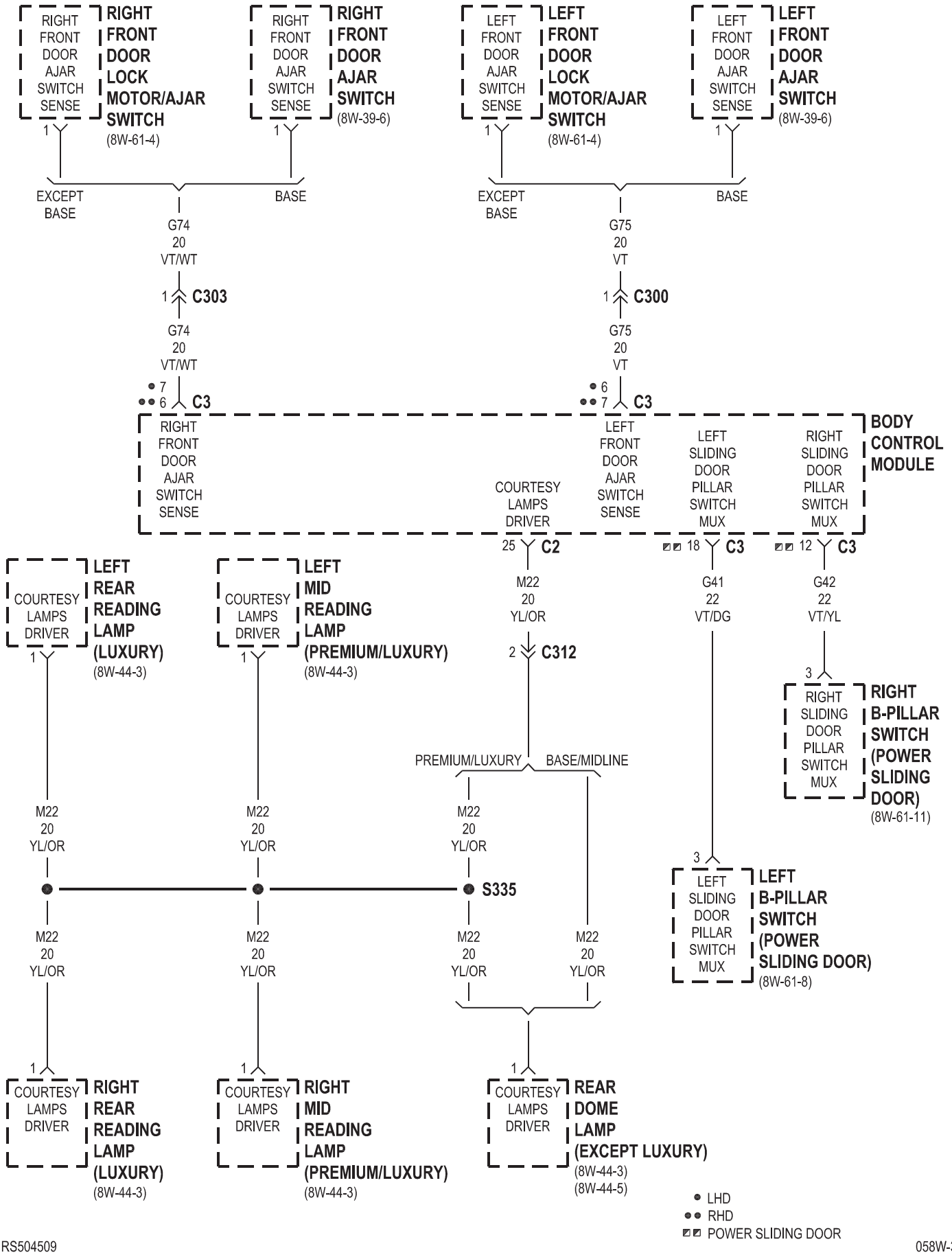
RIGHT FRONT DOOR AJAR SWITCH SENSE
RIGHT FRONT DOOR LOCK MOTOR/AJAR SWITCH
(8W-61-4)
RIGHT FRONT DOOR AJAR SWITCH SENSE
RIGHT FRONT DOOR AJAR SWITCH
(8W-39-6)
LEFT FRONT DOOR AJAR SWITCH SENSE
LEFT FRONT DOOR LOCK MOTOR/AJAR SWITCH
(8W-61-4)
LEFT FRONT DOOR AJAR SWITCH SENSE
LEFT FRONT DOOR AJAR SWITCH
(8W-39-6)
EXCEPT BASE
BASE
G74 20 VT/WT
C303
G75 20 VT
C300
C3
BODY CONTROL MODULE
RIGHT FRONT DOOR AJAR SWITCH SENSE
COURTESY LAMPS DRIVER
LEFT FRONT DOOR AJAR SWITCH SENSE
LEFT SLIDING DOOR PILLAR SWITCH MUX
RIGHT SLIDING DOOR PILLAR SWITCH MUX
C2
C3
M22 20 YL/OR
C312
G41 22 VT/DG
G42 22 VT/YL
COURTESY LAMPS DRIVER
LEFT REAR READING LAMP (LUXURY)
(8W-44-3)
LEFT MID READING LAMP (PREMIUM/LUXURY)
(8W-44-3)
RIGHT SLIDING DOOR PILLAR SWITCH MUX
RIGHT B-PILLAR SWITCH (POWER SLIDING DOOR)
(8W-61-11)
PREMIUM/LUXURY
BASE/MIDLINE
S335
LEFT SLIDING DOOR PILLAR SWITCH MUX
LEFT B-PILLAR SWITCH (POWER SLIDING DOOR)
(8W-61-8)
RIGHT REAR READING LAMP (LUXURY)
(8W-44-3)
RIGHT MID READING LAMP (PREMIUM/LUXURY)
(8W-44-3)
REAR DOME LAMP (EXCEPT LUXURY)
(8W-44-3)
(8W-44-5)
LHD
RHD
POWER SLIDING DOOR

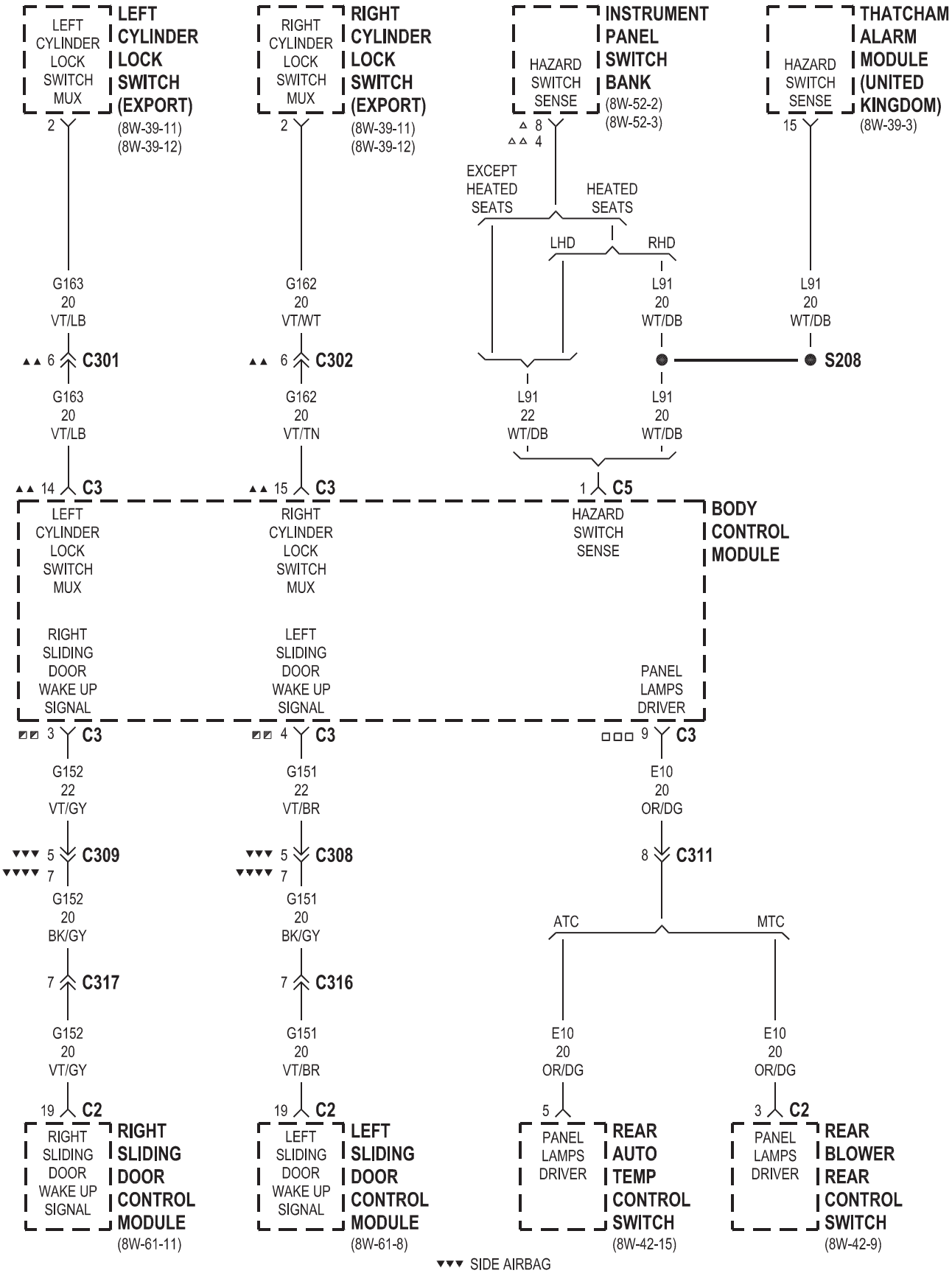
LEFT CYLINDER LOCK SWITCH MUX
LEFT CYLINDER LOCK SWITCH (EXPORT)
(8W-39-11)
(8W-39-12)
RIGHT CYLINDER LOCK SWITCH MUX
RIGHT CYLINDER LOCK SWITCH (EXPORT)
(8W-39-11)
(8W-39-12)
HAZARD SWITCH SENSE
INSTRUMENT PANEL SWITCH BANK
(8W-52-2)
(8W-52-3)
HAZARD SWITCH SENSE
THATCHAM ALARM MODULE (UNITED KINGDOM)
(8W-39-3)
EXCEPT HEATED SEATS
HEATED SEATS
LHD
RHD
G163 20 VT/LB
G162 20 VT/WT
L91 20 WT/DB
L91 20 WT/DB
C301
C302
S208
G163 20 VT/LB
G162 20 VT/TN
L91 22 WT/DB
L91 20 WT/DB
C3
C3
C5
LEFT CYLINDER LOCK SWITCH MUX
RIGHT CYLINDER LOCK SWITCH MUX
HAZARD SWITCH SENSE
BODY CONTROL MODULE
RIGHT SLIDING DOOR WAKE UP SIGNAL
LEFT SLIDING DOOR WAKE UP SIGNAL
PANEL LAMPS DRIVER
C3
C3
C3
G152 22 VT/GY
G151 22 VT/BR
E10 20 OR/DG
C309
C308
C311
G152 20 BK/GY
G151 20 BK/GY
ATC
MTC
C317
C316
G152 20 VT/GY
G151 20 VT/BR
E10 20 OR/DG
E10 20 OR/DG
C2
C2
RIGHT SLIDING DOOR WAKE UP SIGNAL
RIGHT SLIDING DOOR CONTROL MODULE
(8W-61-11)
LEFT SLIDING DOOR WAKE UP SIGNAL
LEFT SLIDING DOOR CONTROL MODULE
(8W-61-8)
PANEL LAMPS DRIVER
REAR AUTO TEMP CONTROL SWITCH
(8W-42-15)
PANEL LAMPS DRIVER
REAR BLOWER REAR CONTROL SWITCH
(8W-42-9)
SIDE AIRBAG
EXCEPT SIDE AIRBAG
3 ZONE HVAC
POWER SLIDING DOOR
HEATED SEATS
EXCEPT HEATED SEATS
EXPORT

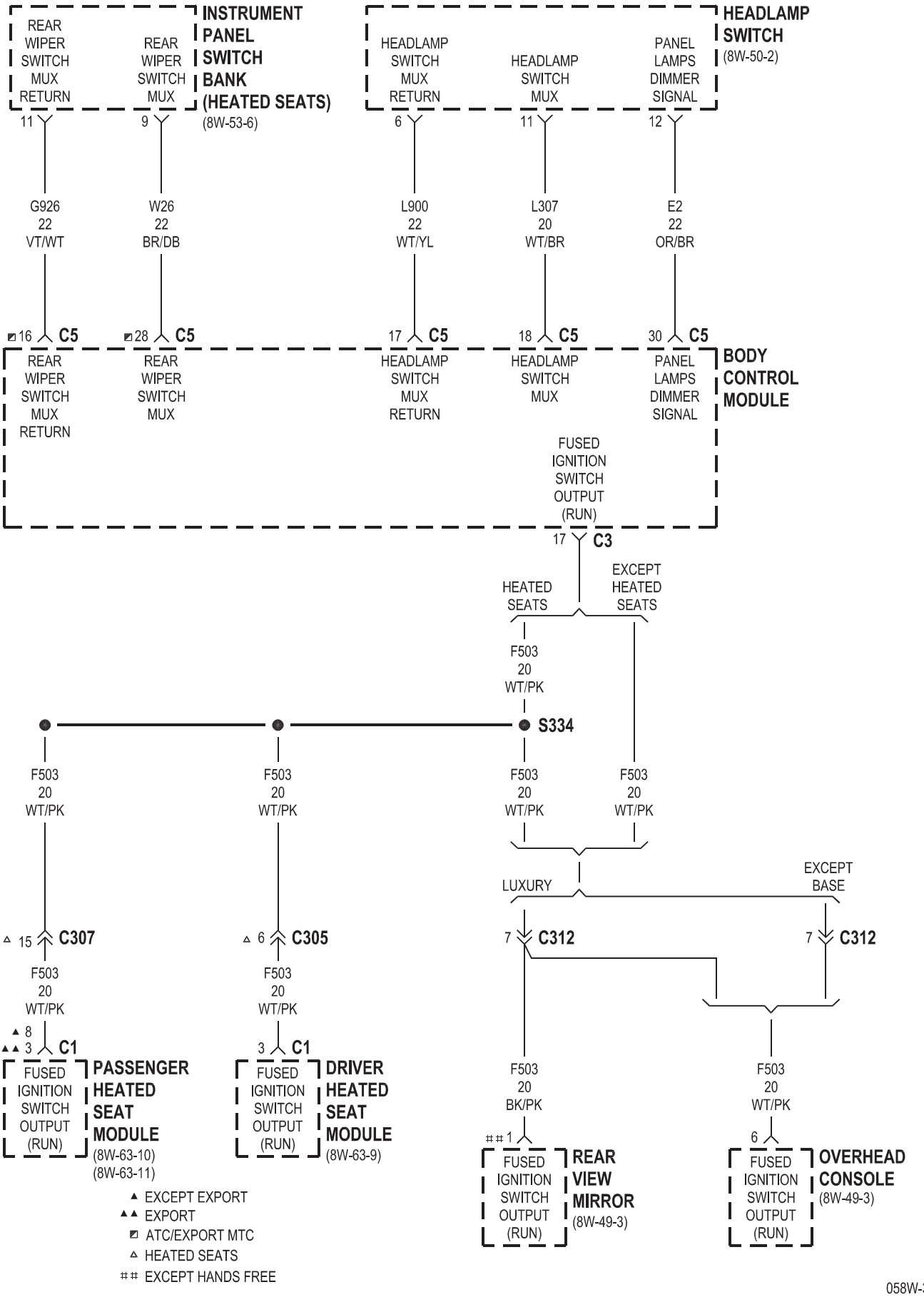
INSTRUMENT PANEL SWITCH BANK (HEATED SEATS)
(8W-53-6)
REAR WIPER SWITCH MUX RETURN
REAR WIPER SWITCH MUX
11
9
HEADLAMP SWITCH
(8W-50-2)
HEADLAMP SWITCH MUX RETURN
HEADLAMP SWITCH MUX
PANEL LAMPS DIMMER SIGNAL
6
11
12
G926 22 VT/WT
W26 22 BR/DB
L900 22 WT/YL
L307 20 WT/BR
E2 22 OR/BR
16 C5
28 C5
17 C5
18 C5
30 C5
BODY CONTROL MODULE
REAR WIPER SWITCH MUX RETURN
REAR WIPER SWITCH MUX
HEADLAMP SWITCH MUX RETURN
HEADLAMP SWITCH MUX
PANEL LAMPS DIMMER SIGNAL
FUSED IGNITION SWITCH OUTPUT (RUN)
17 C3
HEATED SEATS
EXCEPT HEATED SEATS
F503 20 WT/PK
S334
F503 20 WT/PK
LUXURY
EXCEPT BASE
15 C307
6 C305
7 C312
7 C312
8
3 C1
3 C1
FUSED IGNITION SWITCH OUTPUT (RUN)
PASSENGER HEATED SEAT MODULE
(8W-63-10)
(8W-63-11)
DRIVER HEATED SEAT MODULE
(8W-63-9)
F503 20 BK/PK
F503 20 WT/PK
1
6
REAR VIEW MIRROR
(8W-49-3)
OVERHEAD CONSOLE
(8W-49-3)
EXCEPT EXPORT
EXPORT
ATC/EXPORT MTC
HEATED SEATS
EXCEPT HANDS FREE

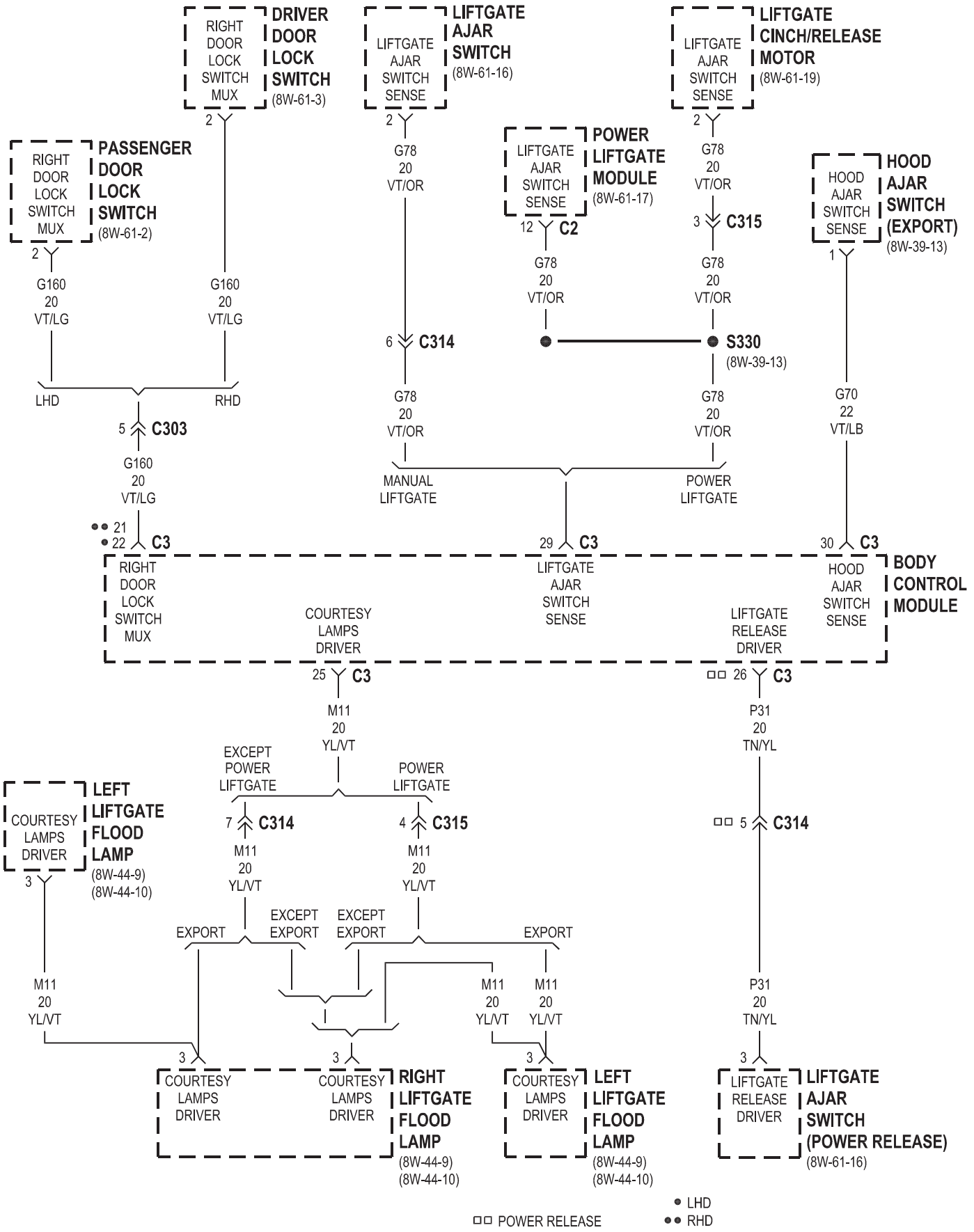
RIGHT DOOR LOCK SWITCH MUX
DRIVER DOOR LOCK SWITCH (8W-61-3)
LIFTGATE AJAR SWITCH SENSE
LIFTGATE AJAR SWITCH (8W-61-16)
LIFTGATE AJAR SWITCH SENSE
LIFTGATE CINCH/RELEASE MOTOR (8W-61-19)
RIGHT DOOR LOCK SWITCH MUX
PASSENGER DOOR LOCK SWITCH (8W-61-2)
LIFTGATE AJAR SWITCH SENSE
POWER LIFTGATE MODULE (8W-61-17)
HOOD AJAR SWITCH SENSE
HOOD AJAR SWITCH (EXPORT) (8W-39-13)
G160 20 VT/LG
G78 20 VT/OR
C2
C315
C314
S330 (8W-39-13)
C303
LHD
RHD
MANUAL LIFTGATE
POWER LIFTGATE
G70 22 VT/LB
C3
BODY CONTROL MODULE
RIGHT DOOR LOCK SWITCH MUX
COURTESY LAMPS DRIVER
LIFTGATE AJAR SWITCH SENSE
HOOD AJAR SWITCH SENSE
LIFTGATE RELEASE DRIVER
M11 20 YL/VT
P31 20 TN/YL
EXCEPT POWER LIFTGATE
POWER LIFTGATE
LEFT LIFTGATE FLOOD LAMP (8W-44-9) (8W-44-10)
EXPORT
EXCEPT EXPORT
RIGHT LIFTGATE FLOOD LAMP (8W-44-9) (8W-44-10)
LIFTGATE RELEASE DRIVER
LIFTGATE AJAR SWITCH (POWER RELEASE) (8W-61-16)
POWER RELEASE
LHD
RHD

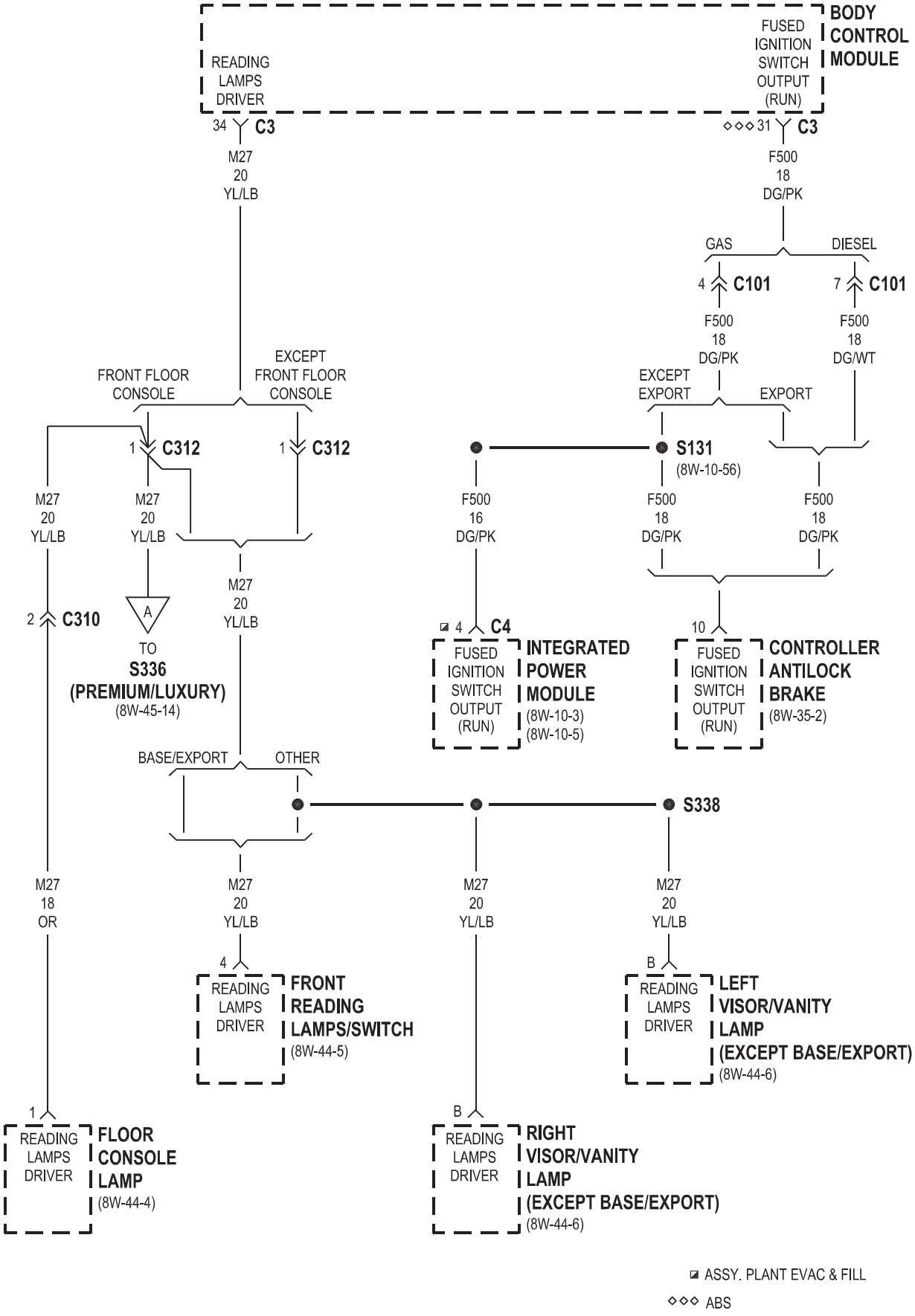
BODY CONTROL MODULE
READING LAMPS DRIVER
FUSED IGNITION SWITCH OUTPUT (RUN)
34 C3
◇◇◇ 31 C3
M27 20 YL/LB
F500 18 DG/PK
GAS
DIESEL
4 C101
7 C101
F500 18 DG/PK
F500 18 DG/WT
FRONT FLOOR CONSOLE
EXCEPT FRONT FLOOR CONSOLE
EXCEPT EXPORT
EXPORT
1 C312
1 C312
S131
(8W-10-56)
M27 20 YL/LB
M27 20 YL/LB
F500 16 DG/PK
F500 18 DG/PK
F500 18 DG/PK
2 C310
A
M27 20 YL/LB
◪ 4 C4
10
TO S336 (PREMIUM/LUXURY)
(8W-45-14)
FUSED IGNITION SWITCH OUTPUT (RUN)
INTEGRATED POWER MODULE
(8W-10-3)
(8W-10-5)
FUSED IGNITION SWITCH OUTPUT (RUN)
CONTROLLER ANTILOCK BRAKE
(8W-35-2)
BASE/EXPORT
OTHER
S338
M27 18 OR
M27 20 YL/LB
M27 20 YL/LB
M27 20 YL/LB
4
B
READING LAMPS DRIVER
FRONT READING LAMPS/SWITCH
(8W-44-5)
READING LAMPS DRIVER
LEFT VISOR/VANITY LAMP (EXCEPT BASE/EXPORT)
(8W-44-6)
1
B
READING LAMPS DRIVER
FLOOR CONSOLE LAMP
(8W-44-4)
READING LAMPS DRIVER
RIGHT VISOR/VANITY LAMP (EXCEPT BASE/EXPORT)
(8W-44-6)
◪ ASSY. PLANT EVAC & FILL
◇◇◇ ABS

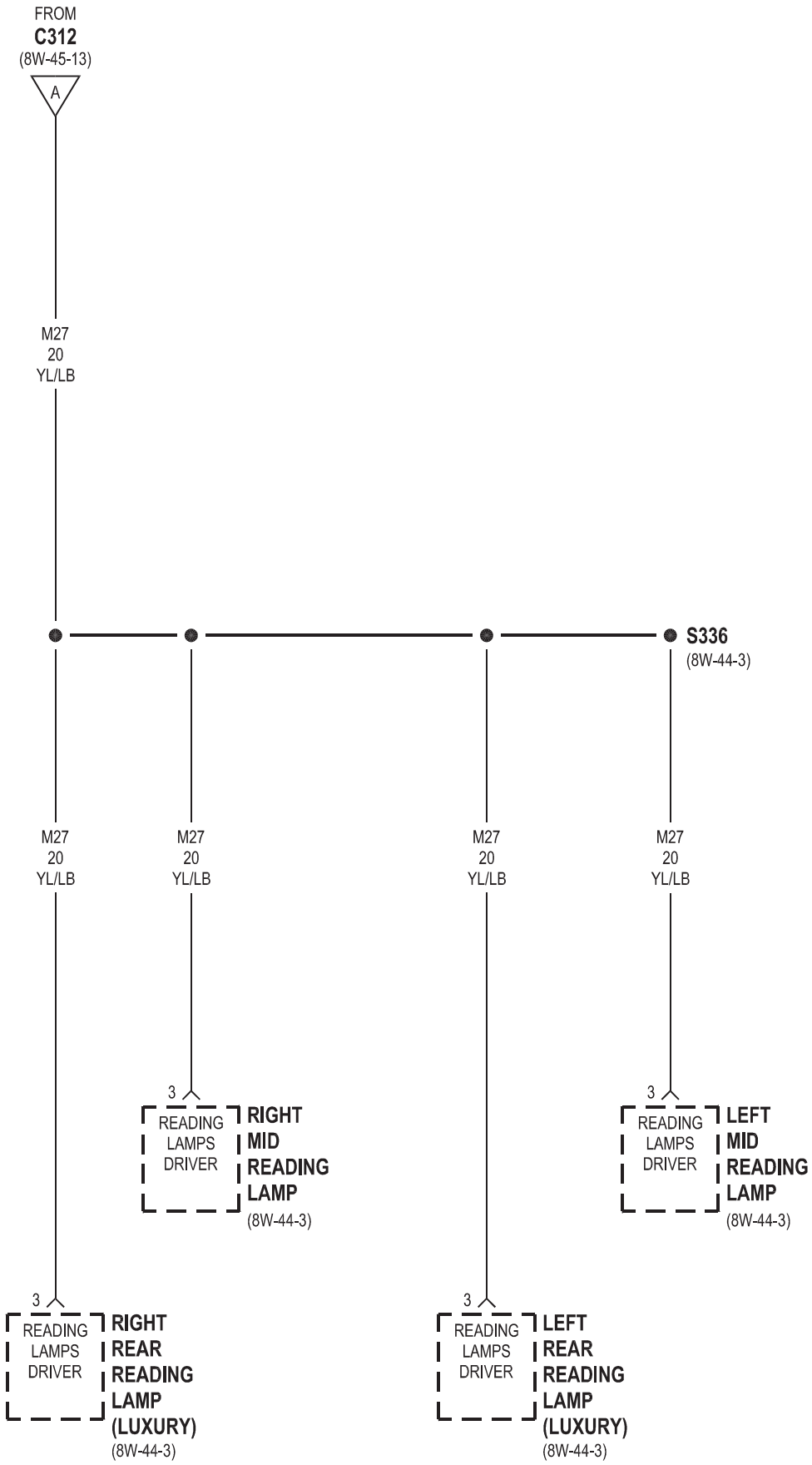
FROM
C312
(8W-45-13)
A
M27
20
YL/LB
S336
(8W-44-3)
M27
20
YL/LB
M27
20
YL/LB
M27
20
YL/LB
M27
20
YL/LB
3
READING
LAMPS
DRIVER
RIGHT
MID
READING
LAMP
(8W-44-3)
3
READING
LAMPS
DRIVER
LEFT
MID
READING
LAMP
(8W-44-3)
3
READING
LAMPS
DRIVER
RIGHT
REAR
READING
LAMP
(LUXURY)
(8W-44-3)
3
READING
LAMPS
DRIVER
LEFT
REAR
READING
LAMP
(LUXURY)
(8W-44-3)

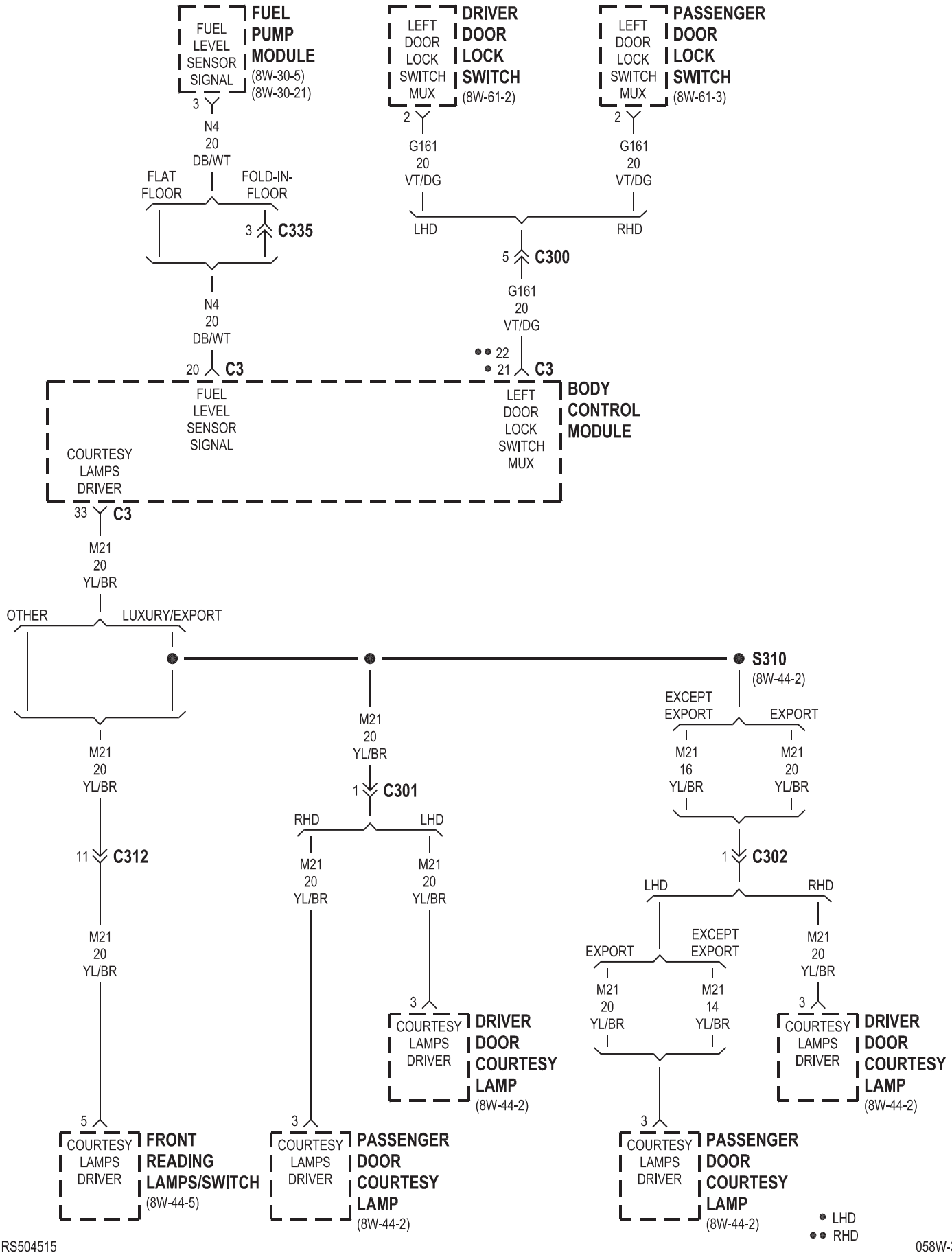
FUEL LEVEL SENSOR SIGNAL
FUEL PUMP MODULE
(8W-30-5)
(8W-30-21)
3
N4
20
DB/WT
FLAT FLOOR
FOLD-IN-FLOOR
3 C335
N4
20
DB/WT
20 C3
FUEL LEVEL SENSOR SIGNAL
LEFT DOOR LOCK SWITCH MUX
DRIVER DOOR LOCK SWITCH
(8W-61-2)
2
G161
20
VT/DG
LHD
LEFT DOOR LOCK SWITCH MUX
PASSENGER DOOR LOCK SWITCH
(8W-61-3)
2
G161
20
VT/DG
RHD
5 C300
G161
20
VT/DG
•• 22
• 21 C3
LEFT DOOR LOCK SWITCH MUX
BODY CONTROL MODULE
COURTESY LAMPS DRIVER
33 C3
M21
20
YL/BR
OTHER
LUXURY/EXPORT
S310
(8W-44-2)
M21
20
YL/BR
11 C312
M21
20
YL/BR
5
COURTESY LAMPS DRIVER
FRONT READING LAMPS/SWITCH
(8W-44-5)
M21
20
YL/BR
1 C301
RHD
LHD
M21
20
YL/BR
M21
20
YL/BR
3
COURTESY LAMPS DRIVER
DRIVER DOOR COURTESY LAMP
(8W-44-2)
3
COURTESY LAMPS DRIVER
PASSENGER DOOR COURTESY LAMP
(8W-44-2)
EXCEPT EXPORT
EXPORT
M21
16
YL/BR
M21
20
YL/BR
1 C302
LHD
RHD
EXPORT
EXCEPT EXPORT
M21
20
YL/BR
M21
14
YL/BR
M21
20
YL/BR
3
COURTESY LAMPS DRIVER
DRIVER DOOR COURTESY LAMP
(8W-44-2)
3
COURTESY LAMPS DRIVER
PASSENGER DOOR COURTESY LAMP
(8W-44-2)
• LHD
•• RHD

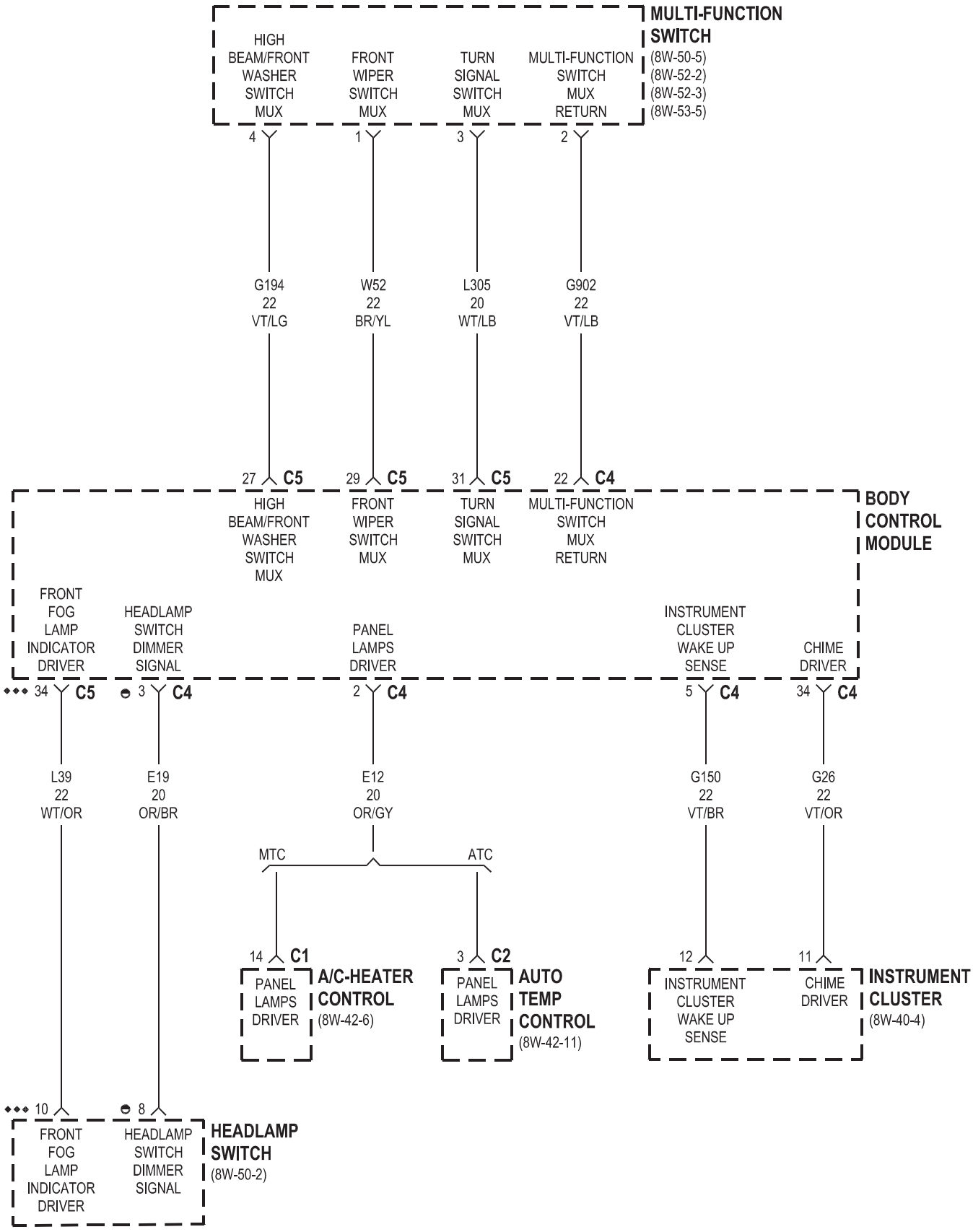
MULTI-FUNCTION SWITCH
(8W-50-5)
(8W-52-2)
(8W-52-3)
(8W-53-5)
HIGH BEAM/FRONT WASHER SWITCH MUX
FRONT WIPER SWITCH MUX
TURN SIGNAL SWITCH MUX
MULTI-FUNCTION SWITCH MUX RETURN
4
1
3
2
G194 22 VT/LG
W52 22 BR/YL
L305 20 WT/LB
G902 22 VT/LB
27 C5
29 C5
31 C5
22 C4
BODY CONTROL MODULE
FRONT FOG LAMP INDICATOR DRIVER
HEADLAMP SWITCH DIMMER SIGNAL
PANEL LAMPS DRIVER
INSTRUMENT CLUSTER WAKE UP SENSE
CHIME DRIVER
34 C5
3 C4
2 C4
5 C4
34 C4
L39 22 WT/OR
E19 20 OR/BR
E12 20 OR/GY
G150 22 VT/BR
G26 22 VT/OR
MTC
ATC
14 C1
3 C2
12
11
A/C-HEATER CONTROL
(8W-42-6)
AUTO TEMP CONTROL
(8W-42-11)
INSTRUMENT CLUSTER
(8W-40-4)
10
8
HEADLAMP SWITCH
(8W-50-2)
AUTO HEADLAMPS
HIGHLINE

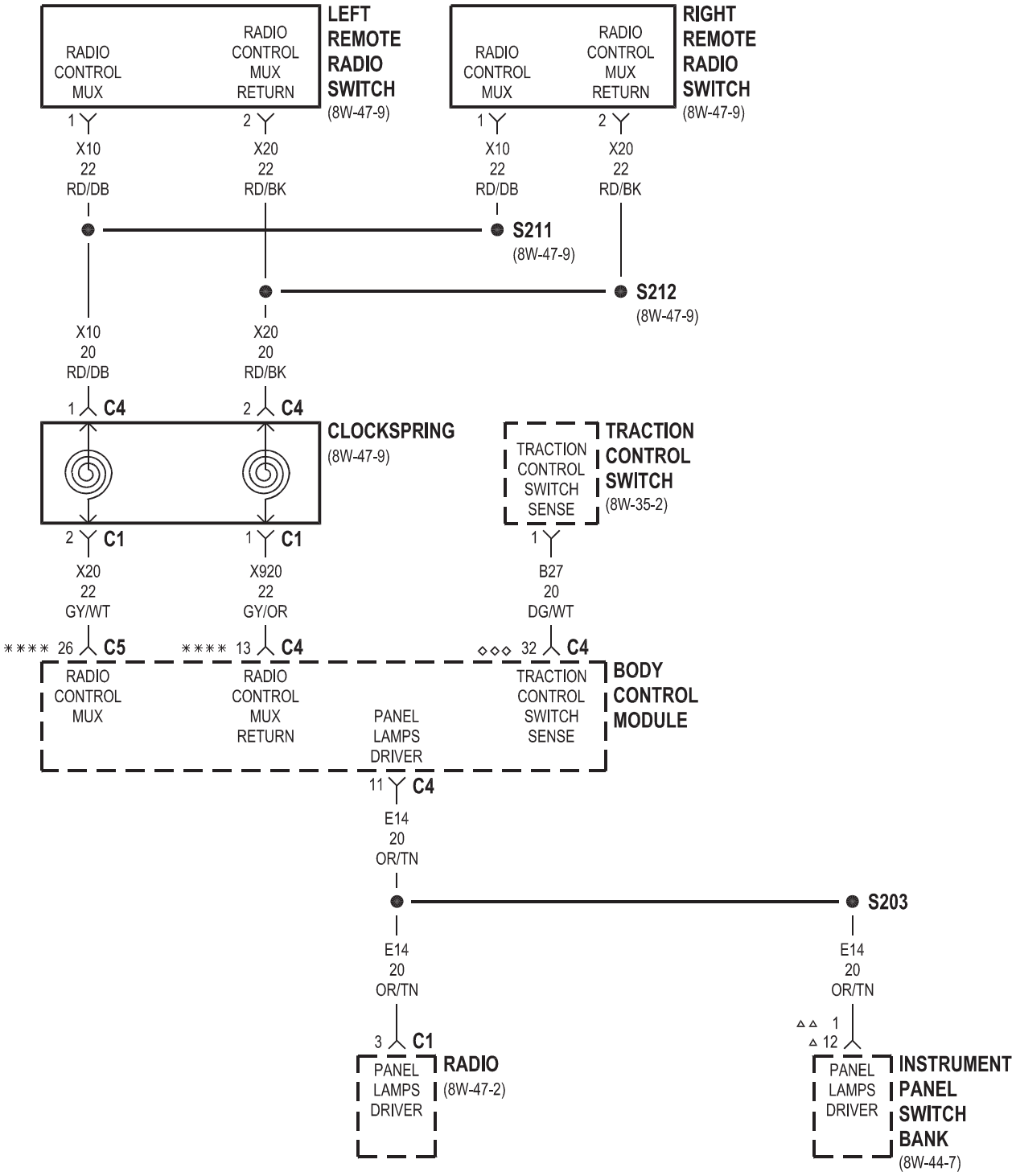

✱✱✱✱ REMOTE AUDIO
◇◇◇ ABS
△ HEATED SEATS
△△ EXCEPT HEATED SEATS

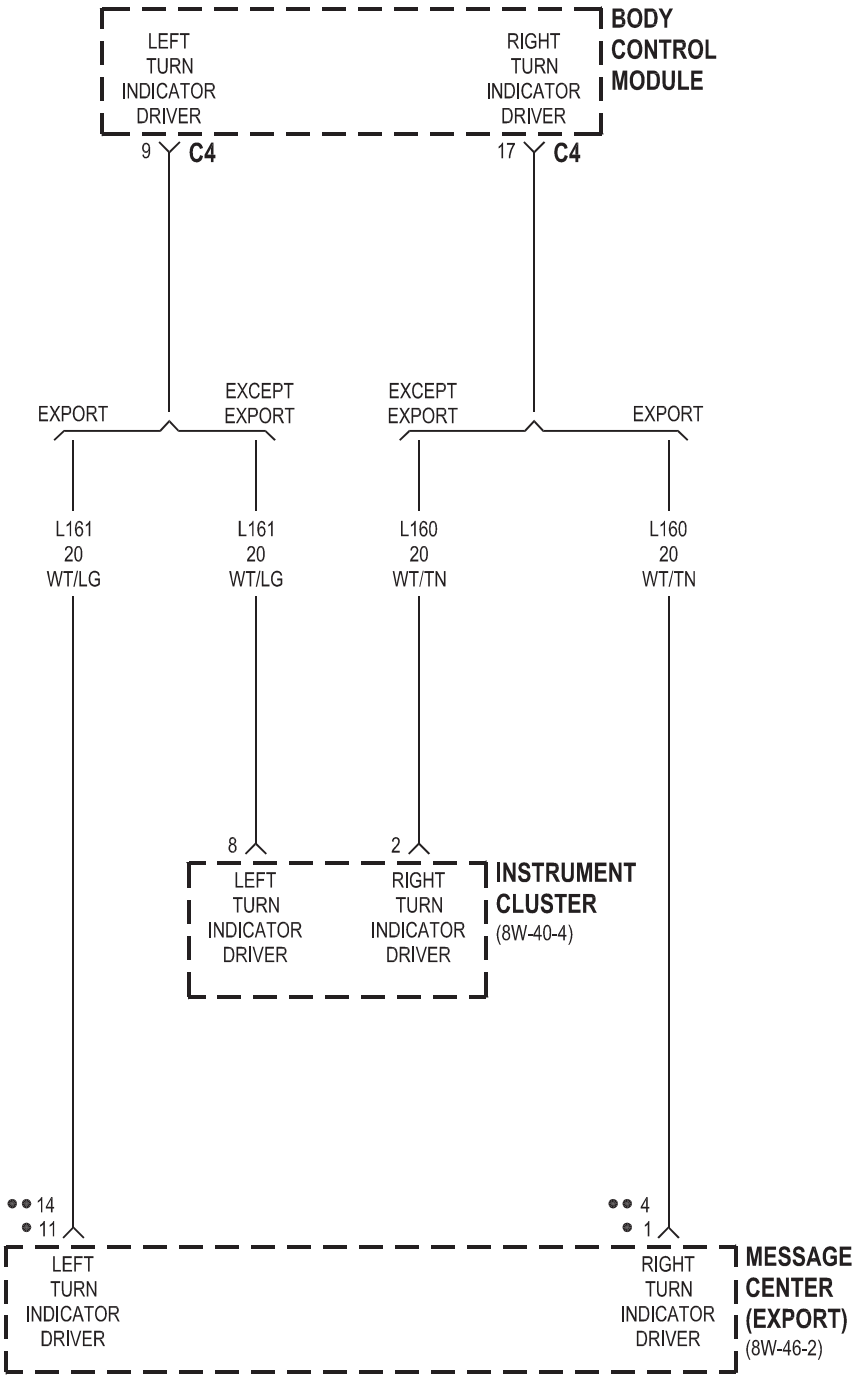
BODY CONTROL MODULE
LEFT TURN INDICATOR DRIVER
RIGHT TURN INDICATOR DRIVER
9 C4
17 C4
EXPORT
EXCEPT EXPORT
EXCEPT EXPORT
EXPORT
L161 20 WT/LG
L161 20 WT/LG
L160 20 WT/TN
L160 20 WT/TN
8
2
LEFT TURN INDICATOR DRIVER
RIGHT TURN INDICATOR DRIVER
INSTRUMENT CLUSTER
(8W-40-4)
•• 14
• 11
•• 4
• 1
LEFT TURN INDICATOR DRIVER
RIGHT TURN INDICATOR DRIVER
MESSAGE CENTER (EXPORT)
(8W-46-2)

• LHD
•• RHD

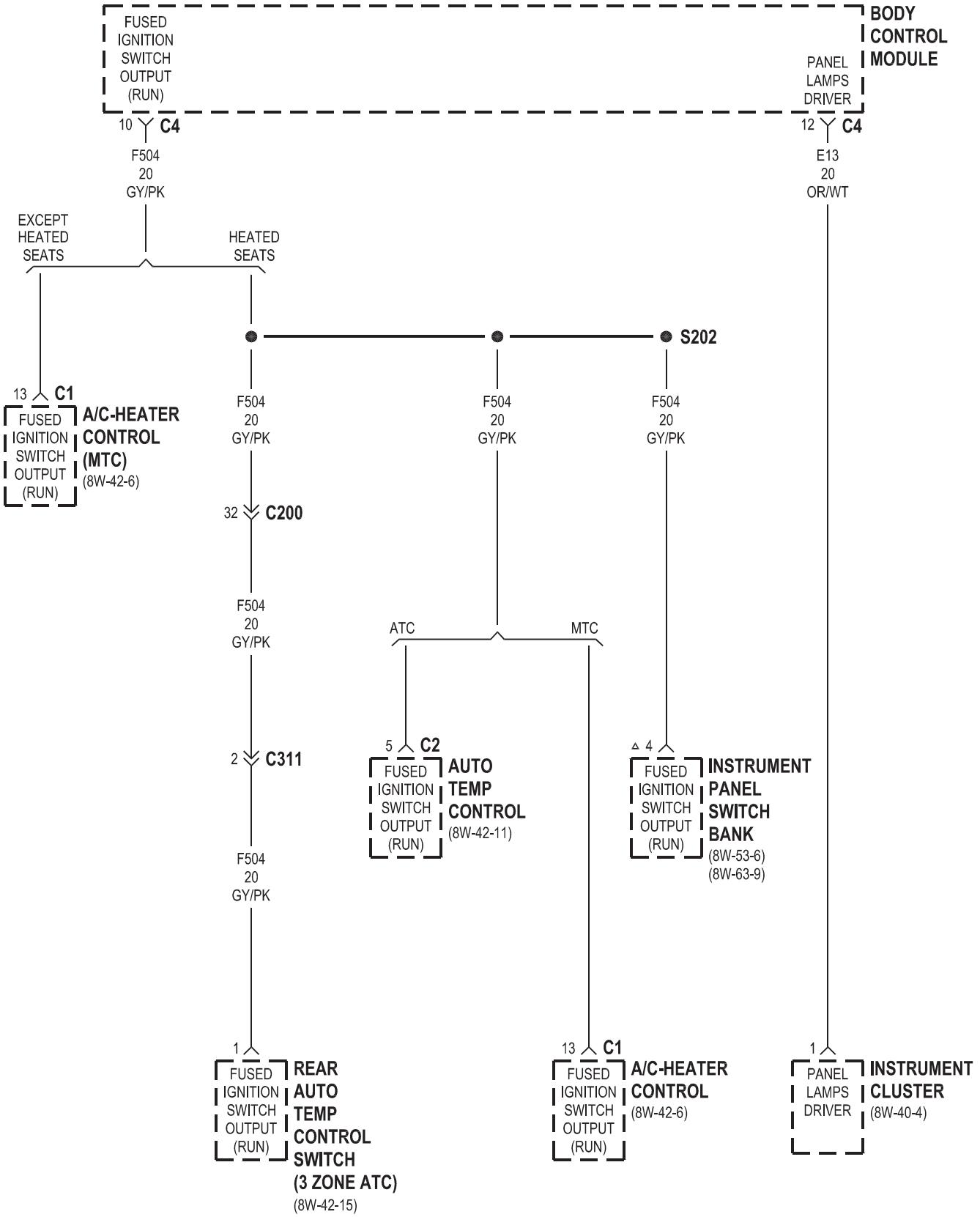

△ HEATED SEATS

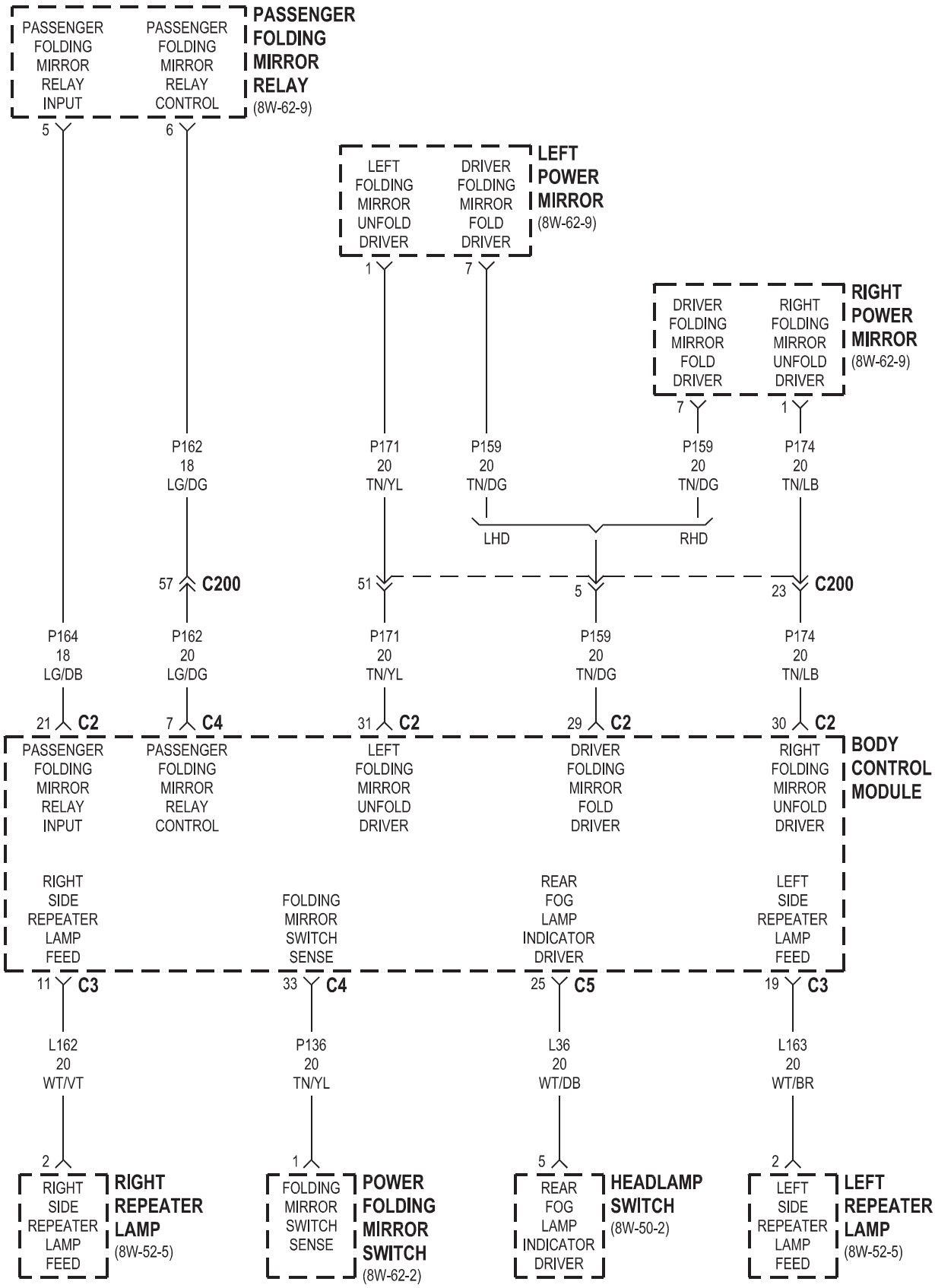
PASSENGER FOLDING MIRROR RELAY INPUT
PASSENGER FOLDING MIRROR RELAY CONTROL
PASSENGER FOLDING MIRROR RELAY
(8W-62-9)
5
6
LEFT FOLDING MIRROR UNFOLD DRIVER
DRIVER FOLDING MIRROR FOLD DRIVER
LEFT POWER MIRROR
(8W-62-9)
1
7
DRIVER FOLDING MIRROR FOLD DRIVER
RIGHT FOLDING MIRROR UNFOLD DRIVER
RIGHT POWER MIRROR
(8W-62-9)
7
1
P162 18 LG/DG
P171 20 TN/YL
P159 20 TN/DG
P159 20 TN/DG
P174 20 TN/LB
LHD
RHD
57 C200
51
5
23 C200
P164 18 LG/DB
P162 20 LG/DG
P171 20 TN/YL
P159 20 TN/DG
P174 20 TN/LB
21 C2
7 C4
31 C2
29 C2
30 C2
PASSENGER FOLDING MIRROR RELAY INPUT
PASSENGER FOLDING MIRROR RELAY CONTROL
LEFT FOLDING MIRROR UNFOLD DRIVER
DRIVER FOLDING MIRROR FOLD DRIVER
RIGHT FOLDING MIRROR UNFOLD DRIVER
BODY CONTROL MODULE
RIGHT SIDE REPEATER LAMP FEED
FOLDING MIRROR SWITCH SENSE
REAR FOG LAMP INDICATOR DRIVER
LEFT SIDE REPEATER LAMP FEED
11 C3
33 C4
25 C5
19 C3
L162 20 WT/VT
P136 20 TN/YL
L36 20 WT/DB
L163 20 WT/BR
2
1
5
2
RIGHT SIDE REPEATER LAMP FEED
RIGHT REPEATER LAMP
(8W-52-5)
FOLDING MIRROR SWITCH SENSE
POWER FOLDING MIRROR SWITCH
(8W-62-2)
REAR FOG LAMP INDICATOR DRIVER
HEADLAMP SWITCH
(8W-50-2)
LEFT SIDE REPEATER LAMP FEED
LEFT REPEATER LAMP
(8W-52-5)

8W-46 MESSAGE CENTER

Component	Page
Body Control Module	8W-46-2
Fuse 24	8W-46-2
Instrument Cluster	8W-46-2
Integrated Power Module	8W-46-2
Message Center	8W-46-2

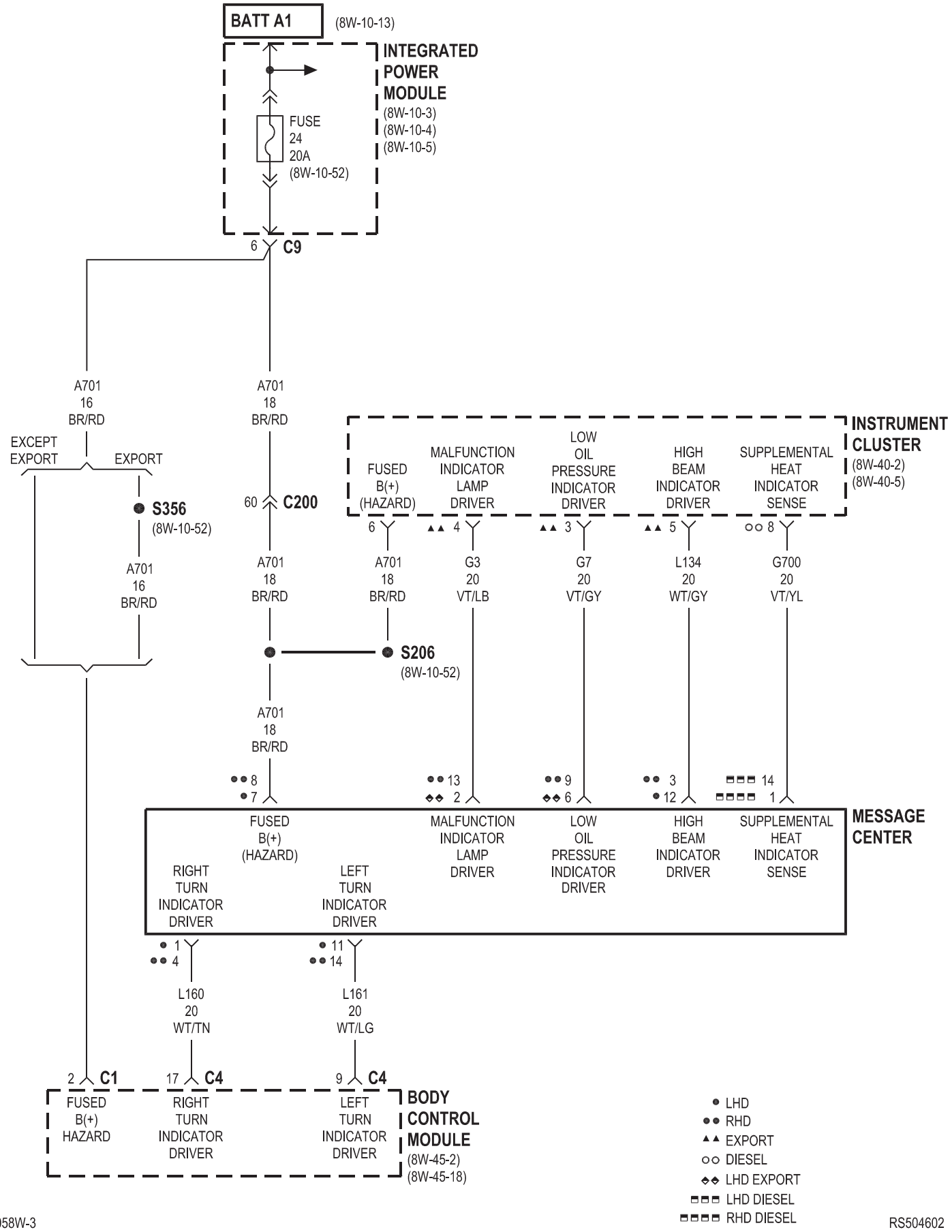
BATT A1
(8W-10-13)
INTEGRATED POWER MODULE
(8W-10-3)
(8W-10-4)
(8W-10-5)
FUSE 24 20A
(8W-10-52)
6 C9
A701 16 BR/RD
A701 18 BR/RD
EXCEPT EXPORT
EXPORT
S356
(8W-10-52)
60 C200
A701 16 BR/RD
A701 18 BR/RD
S206
(8W-10-52)
A701 18 BR/RD
INSTRUMENT CLUSTER
(8W-40-2)
(8W-40-5)
FUSED B(+) (HAZARD)
MALFUNCTION INDICATOR LAMP DRIVER
LOW OIL PRESSURE INDICATOR DRIVER
HIGH BEAM INDICATOR DRIVER
SUPPLEMENTAL HEAT INDICATOR SENSE
6
4
3
5
8
A701 18 BR/RD
G3 20 VT/LB
G7 20 VT/GY
L134 20 WT/GY
G700 20 VT/YL
8
7
13
2
9
6
3
12
14
1
MESSAGE CENTER
FUSED B(+) (HAZARD)
MALFUNCTION INDICATOR LAMP DRIVER
LOW OIL PRESSURE INDICATOR DRIVER
HIGH BEAM INDICATOR DRIVER
SUPPLEMENTAL HEAT INDICATOR SENSE
RIGHT TURN INDICATOR DRIVER
LEFT TURN INDICATOR DRIVER
1
4
11
14
L160 20 WT/TN
L161 20 WT/LG
2 C1
17 C4
9 C4
FUSED B(+) HAZARD
RIGHT TURN INDICATOR DRIVER
LEFT TURN INDICATOR DRIVER
BODY CONTROL MODULE
(8W-45-2)
(8W-45-18)
LHD
RHD
EXPORT
DIESEL
LHD EXPORT
LHD DIESEL
RHD DIESEL

8W-47 AUDIO SYSTEM

Component	Page
Accessory Relay	8W-47-2
Amplifier	8W-47-2, 6, 7, 8
Antenna	8W-47-2
Body Control Module	8W-47-2, 9
CD Changer	8W-47-10, 11, 12
Clockspring	8W-47-9
Data Link Connector	8W-47-6
DVD Screen	8W-47-14
DVD/CD Changer	8W-47-13, 14, 15
Front Cigar Lighter	8W-47-2
Front Control Module	8W-47-2
Fuse 5	8W-47-2
Fuse 14	8W-47-2, 13
Fuse 20	8W-47-6
G200	8W-47-13
G202	8W-47-2
G302	8W-47-6
Hands Free Module	8W-47-12, 15
Integrated Power Module	8W-47-2, 6, 13
Left Door Speaker	8W-47-3, 4, 7, 8
Left Instrument Panel Speaker	8W-47-3, 4, 7, 8
Left Rear Pillar Speaker	8W-47-7, 8
Left Rear Speaker	8W-47-5, 7, 8
Left Remote Radio Switch	8W-47-9
Overhead Console	8W-47-6
Radio	8W-47-2, 3, 4, 5, 6, 10, 11, 12, 13, 15
Right Door Speaker	8W-47-3, 4, 7, 8
Right Instrument Panel Speaker	8W-47-3, 4, 7, 8
Right Rear Pillar Speaker	8W-47-7, 8
Right Rear Speaker	8W-47-5, 7, 8
Right Remote Radio Switch	8W-47-9
Right Sliding Door Control Module	8W-47-6

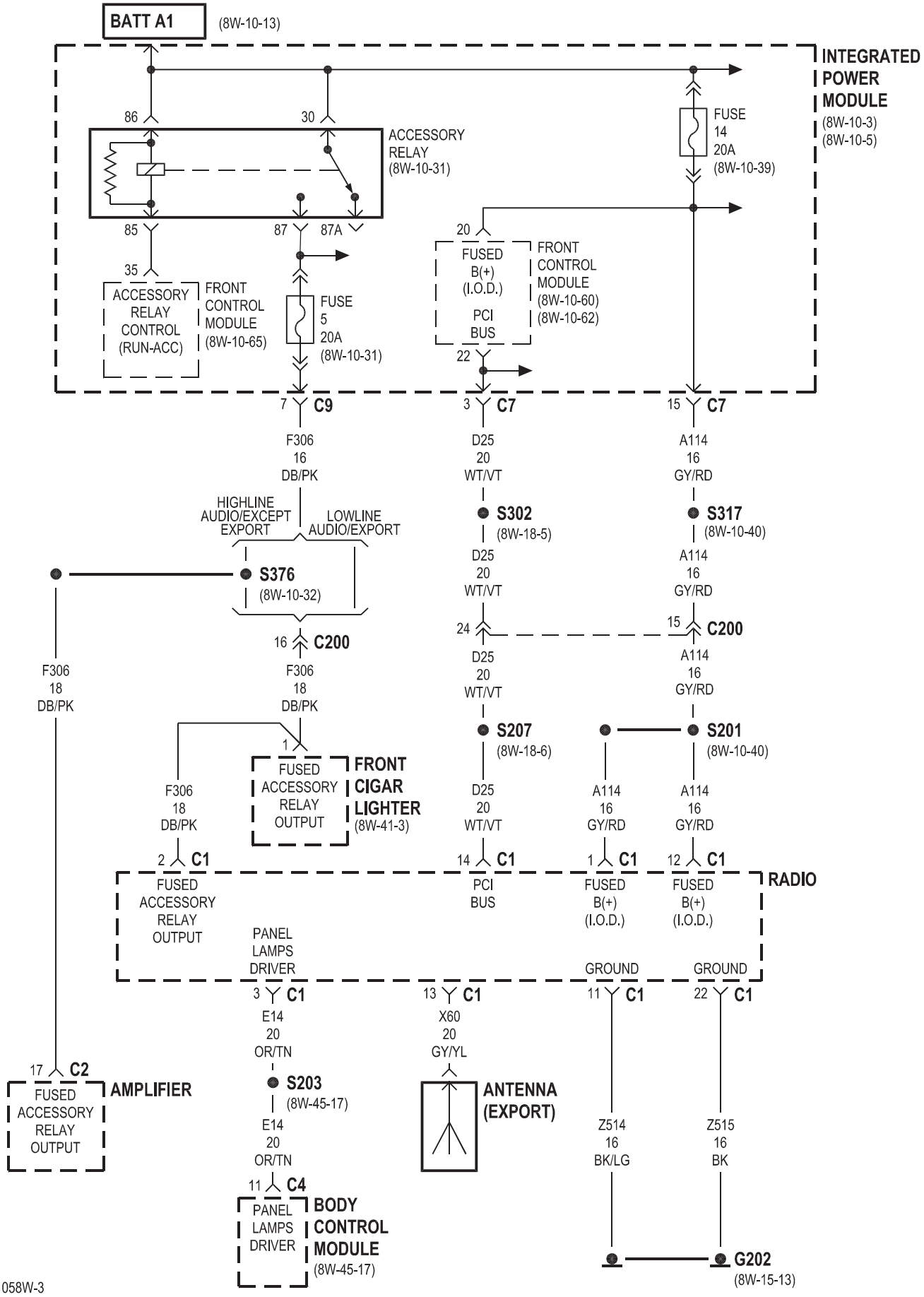
BATT A1
(8W-10-13)
INTEGRATED POWER MODULE
(8W-10-3)
(8W-10-5)
86
30
ACCESSORY RELAY
(8W-10-31)
85
87
87A
35
ACCESSORY RELAY CONTROL (RUN-ACC)
FRONT CONTROL MODULE
(8W-10-65)
FUSE 5 20A
(8W-10-31)
FUSE 14 20A
(8W-10-39)
20
FUSED B(+) (I.O.D.)
PCI BUS
FRONT CONTROL MODULE
(8W-10-60)
(8W-10-62)
22
7 C9
3 C7
15 C7
F306 16 DB/PK
D25 20 WT/VT
A114 16 GY/RD
HIGHLINE AUDIO/EXCEPT EXPORT
LOWLINE AUDIO/EXPORT
S376
(8W-10-32)
S302
(8W-18-5)
S317
(8W-10-40)
16 C200
24 C200
15 C200
F306 18 DB/PK
S207
(8W-18-6)
S201
(8W-10-40)
1
FUSED ACCESSORY RELAY OUTPUT
FRONT CIGAR LIGHTER
(8W-41-3)
2 C1
14 C1
1 C1
12 C1
FUSED ACCESSORY RELAY OUTPUT
PCI BUS
FUSED B(+) (I.O.D.)
RADIO
PANEL LAMPS DRIVER
GROUND
3 C1
13 C1
11 C1
22 C1
E14 20 OR/TN
X60 20 GY/YL
17 C2
AMPLIFIER
S203
(8W-45-17)
ANTENNA (EXPORT)
Z514 16 BK/LG
Z515 16 BK
11 C4
BODY CONTROL MODULE
(8W-45-17)
G202
(8W-15-13)

EXCEPT EXPORT LOWLINE

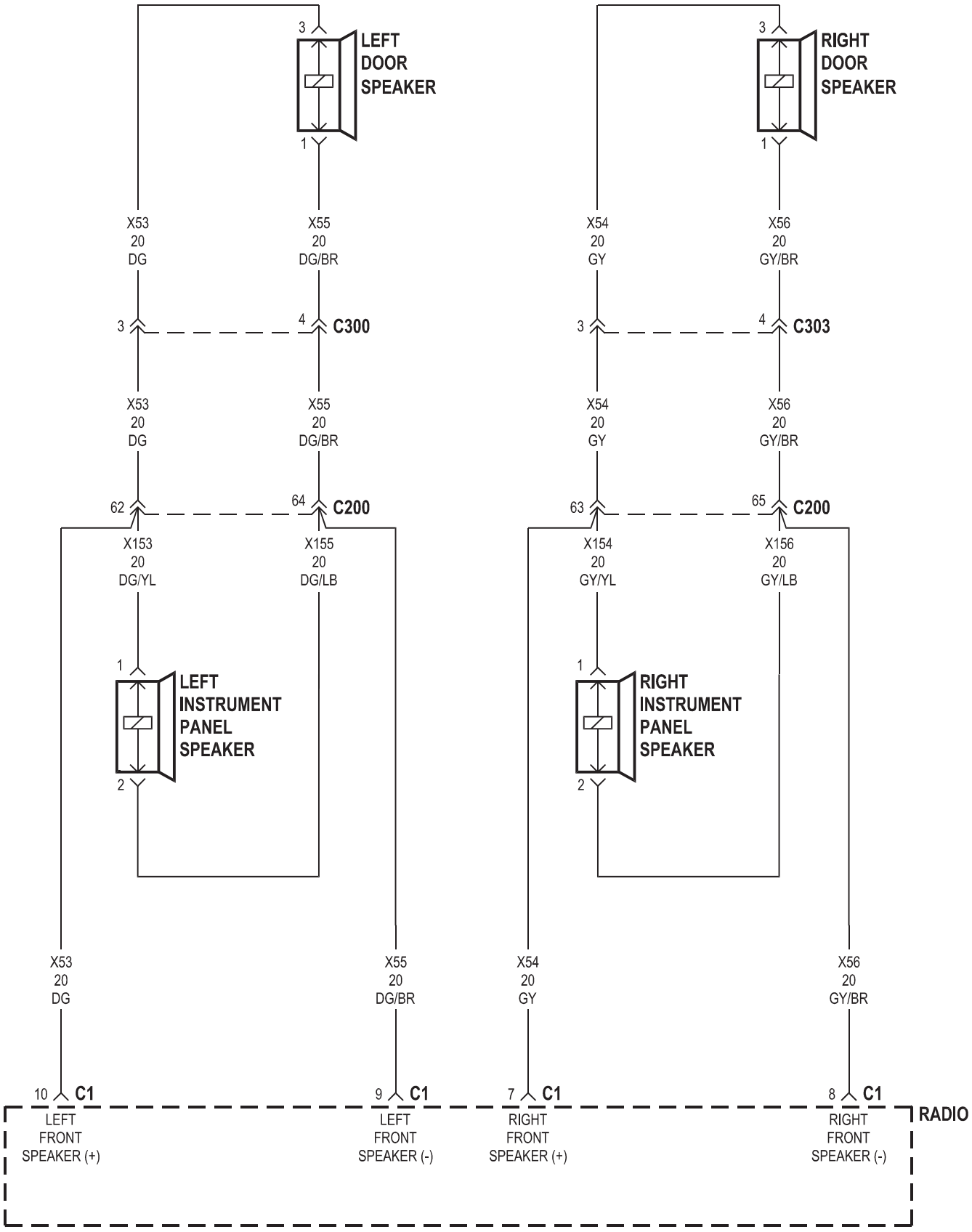

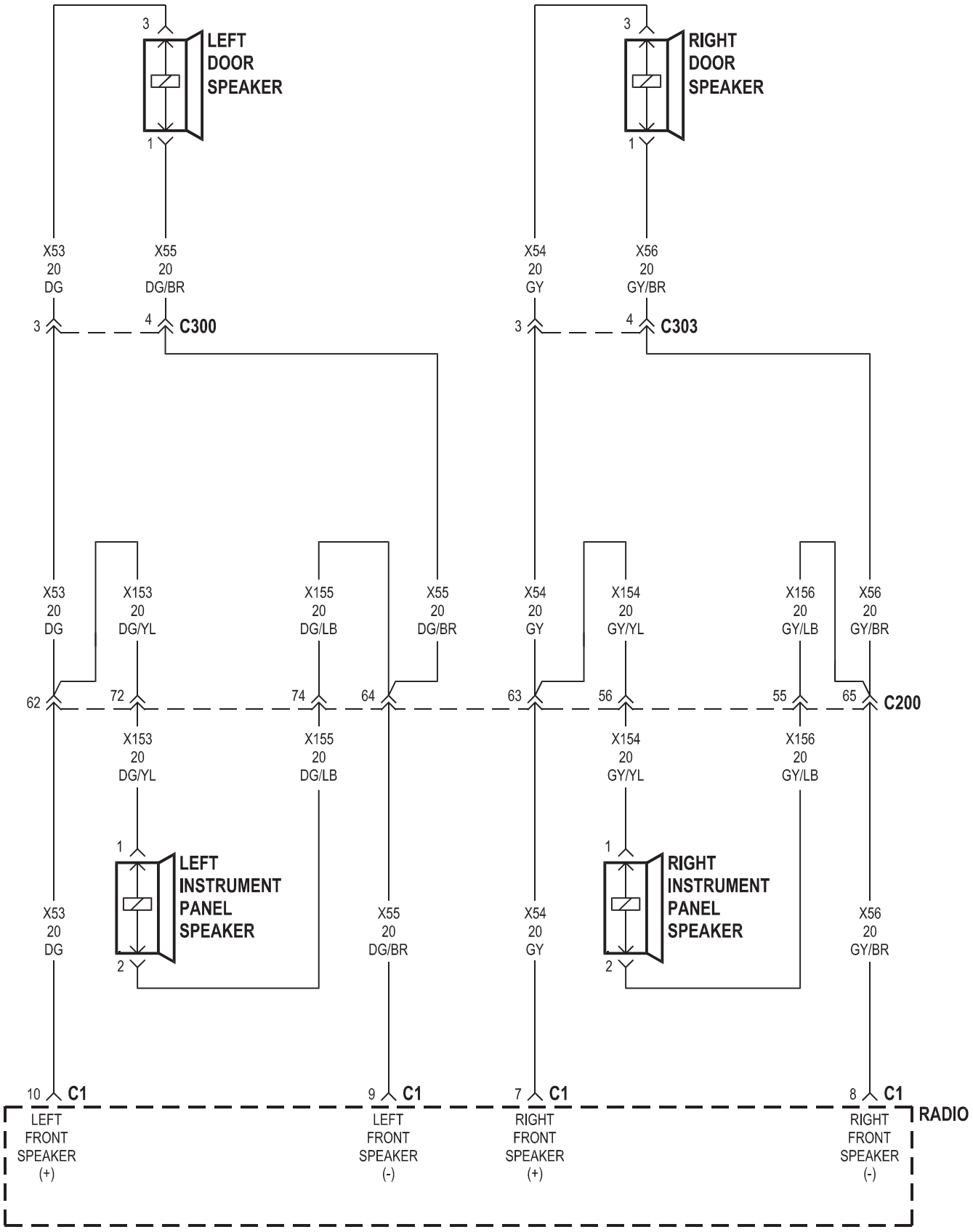
LEFT DOOR SPEAKER
RIGHT DOOR SPEAKER
X53 20 DG
X55 20 DG/BR
X54 20 GY
X56 20 GY/BR
C300
C303
X153 20 DG/YL
X155 20 DG/LB
X154 20 GY/YL
X156 20 GY/LB
C200
LEFT INSTRUMENT PANEL SPEAKER
RIGHT INSTRUMENT PANEL SPEAKER
C1
RADIO
LEFT FRONT SPEAKER (+)
LEFT FRONT SPEAKER (-)
RIGHT FRONT SPEAKER (+)
RIGHT FRONT SPEAKER (-)

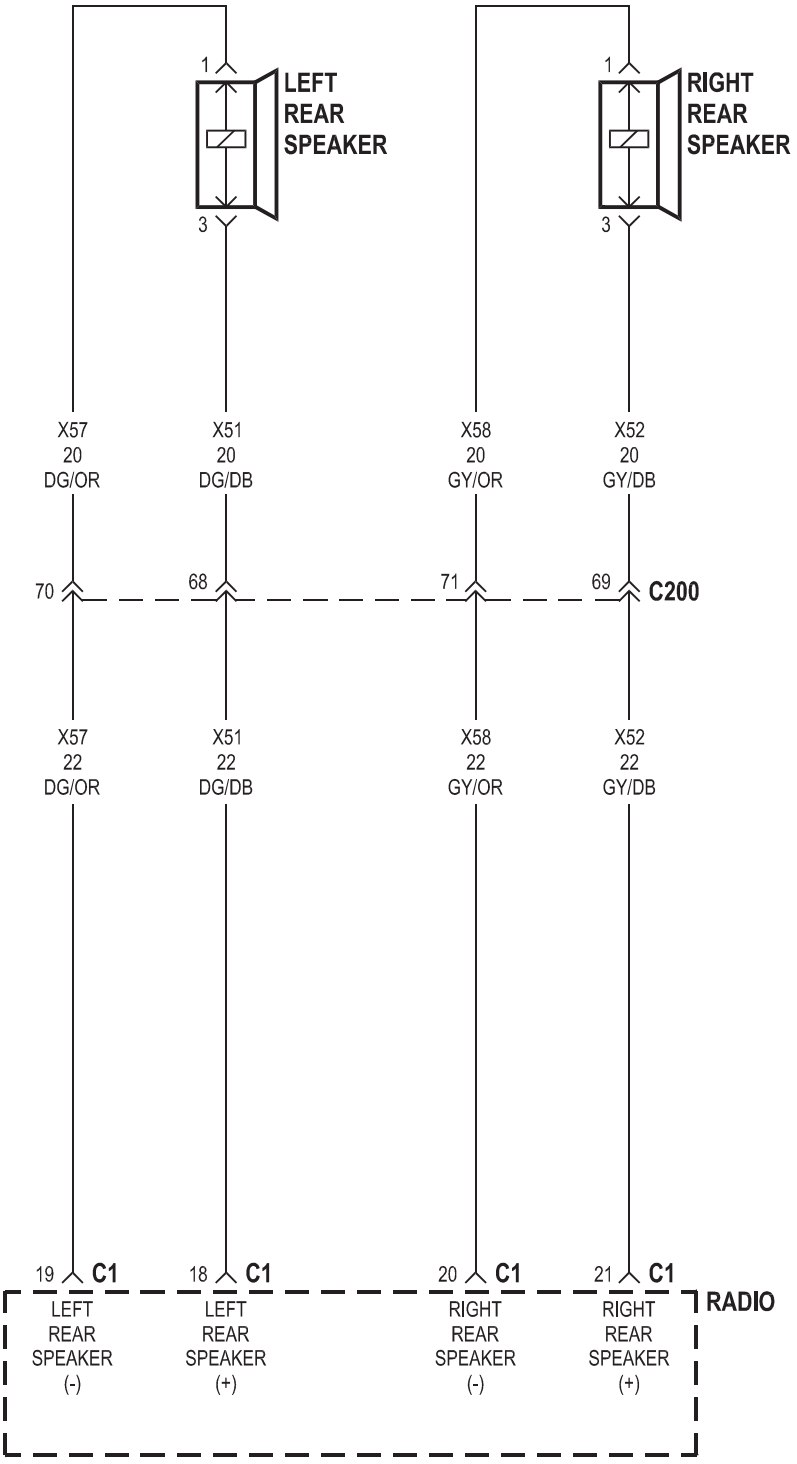
1
LEFT
REAR
SPEAKER
3
1
RIGHT
REAR
SPEAKER
3
X57
20
DG/OR
X51
20
DG/DB
X58
20
GY/OR
X52
20
GY/DB
70
68
71
69
C200
X57
22
DG/OR
X51
22
DG/DB
X58
22
GY/OR
X52
22
GY/DB
19
C1
LEFT
REAR
SPEAKER
(-)
18
C1
LEFT
REAR
SPEAKER
(+)
20
C1
RIGHT
REAR
SPEAKER
(-)
21
C1
RIGHT
REAR
SPEAKER
(+)
RADIO

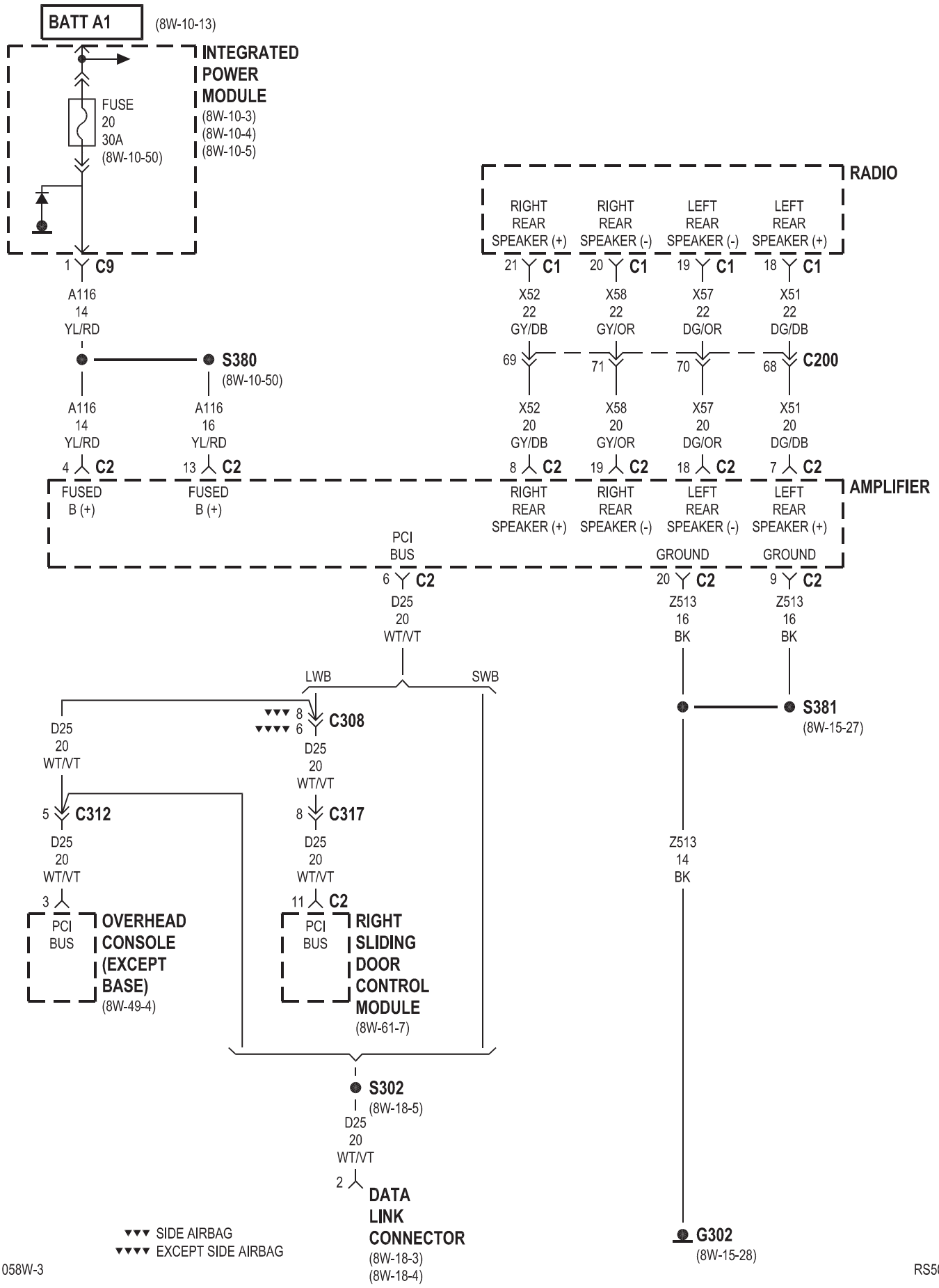
BATT A1
(8W-10-13)
INTEGRATED POWER MODULE
(8W-10-3)
(8W-10-4)
(8W-10-5)
FUSE 20 30A
(8W-10-50)
1 C9
A116 14 YL/RD
S380
(8W-10-50)
A116 14 YL/RD
A116 16 YL/RD
4 C2
13 C2
FUSED B (+)
FUSED B (+)
RADIO
RIGHT REAR SPEAKER (+)
RIGHT REAR SPEAKER (-)
LEFT REAR SPEAKER (-)
LEFT REAR SPEAKER (+)
21 C1
20 C1
19 C1
18 C1
X52 22 GY/DB
X58 22 GY/OR
X57 22 DG/OR
X51 22 DG/DB
69
71
70
68 C200
X52 20 GY/DB
X58 20 GY/OR
X57 20 DG/OR
X51 20 DG/DB
8 C2
19 C2
18 C2
7 C2
RIGHT REAR SPEAKER (+)
RIGHT REAR SPEAKER (-)
LEFT REAR SPEAKER (-)
LEFT REAR SPEAKER (+)
AMPLIFIER
PCI BUS
6 C2
D25 20 WT/VT
GROUND
20 C2
Z513 16 BK
GROUND
9 C2
Z513 16 BK
LWB
SWB
▼▼▼ 8
▼▼▼▼ 6 C308
D25 20 WT/VT
D25 20 WT/VT
5 C312
D25 20 WT/VT
3
PCI BUS
OVERHEAD CONSOLE (EXCEPT BASE)
(8W-49-4)
8 C317
D25 20 WT/VT
11 C2
PCI BUS
RIGHT SLIDING DOOR CONTROL MODULE
(8W-61-7)
S381
(8W-15-27)
Z513 14 BK
S302
(8W-18-5)
D25 20 WT/VT
2
DATA LINK CONNECTOR
(8W-18-3)
(8W-18-4)
G302
(8W-15-28)
▼▼▼ SIDE AIRBAG
▼▼▼▼ EXCEPT SIDE AIRBAG

HIGHLINE EXCEPT EXPORT

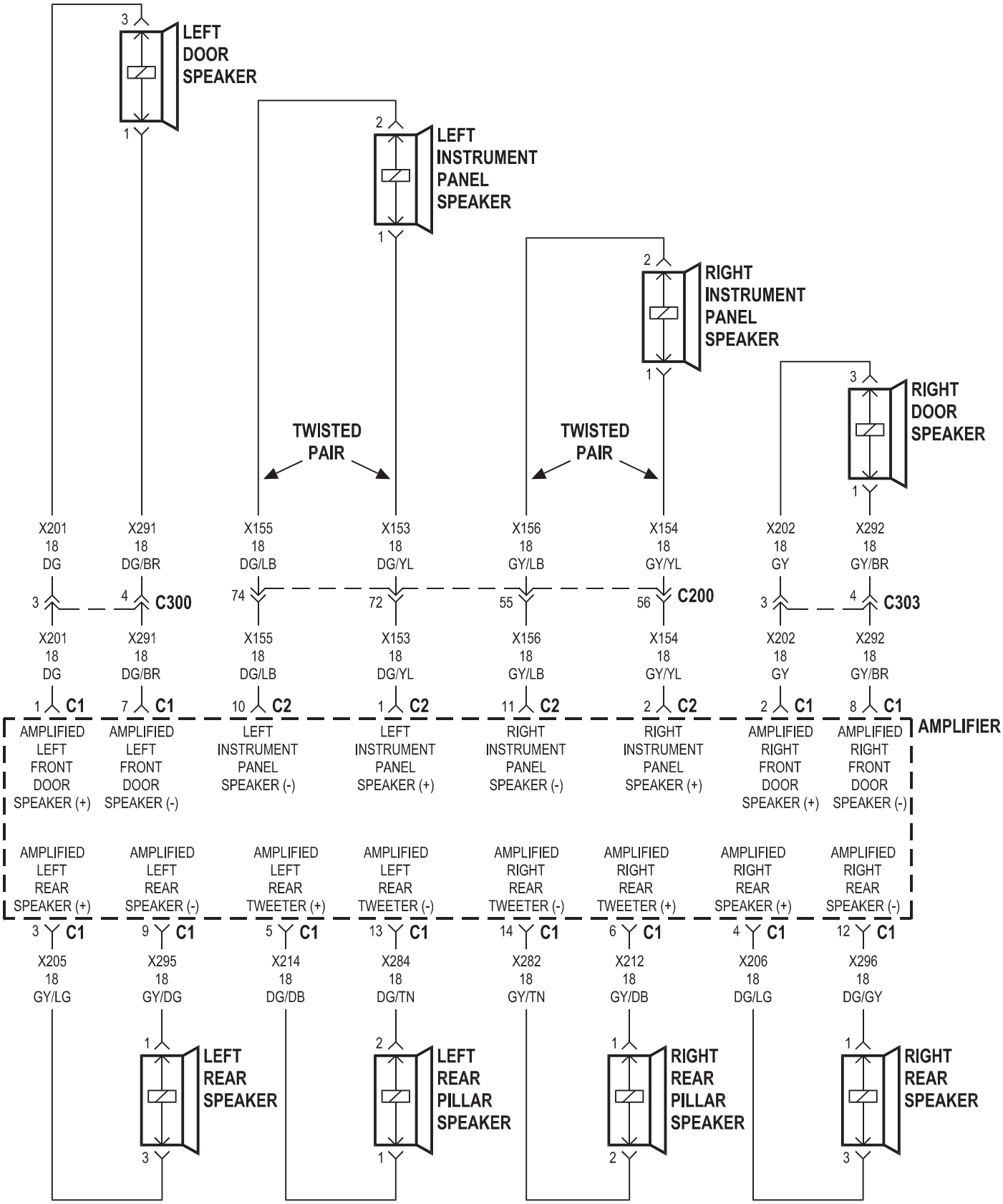

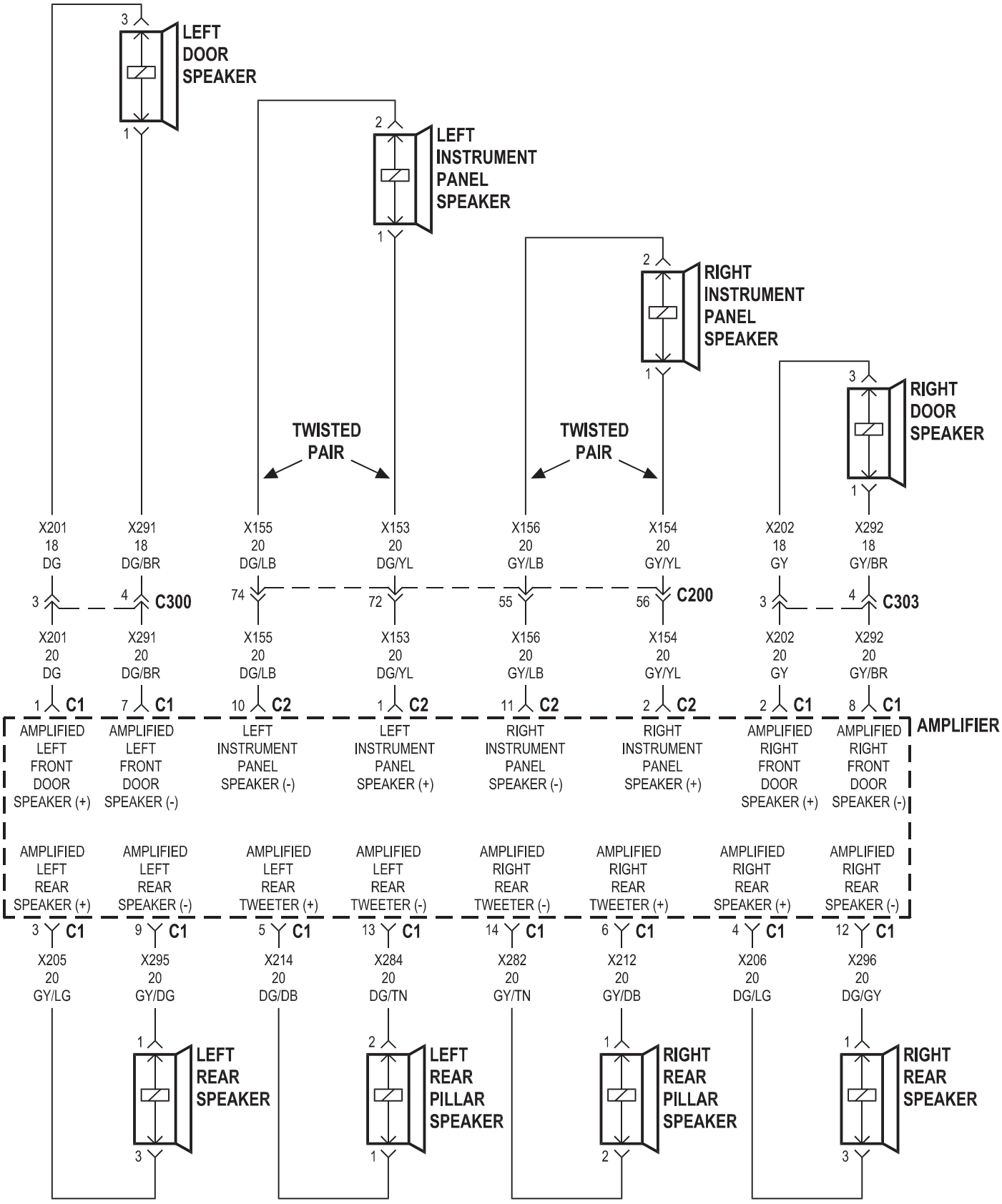
LEFT DOOR SPEAKER
LEFT INSTRUMENT PANEL SPEAKER
RIGHT INSTRUMENT PANEL SPEAKER
RIGHT DOOR SPEAKER
TWISTED PAIR
TWISTED PAIR
X201 18 DG
X291 18 DG/BR
X155 20 DG/LB
X153 20 DG/YL
X156 20 GY/LB
X154 20 GY/YL
X202 18 GY
X292 18 GY/BR
C300
C200
C303
X201 20 DG
X291 20 DG/BR
X155 20 DG/LB
X153 20 DG/YL
X156 20 GY/LB
X154 20 GY/YL
X202 20 GY
X292 20 GY/BR
C1
C2
AMPLIFIED LEFT FRONT DOOR SPEAKER (+)
AMPLIFIED LEFT FRONT DOOR SPEAKER (-)
LEFT INSTRUMENT PANEL SPEAKER (-)
LEFT INSTRUMENT PANEL SPEAKER (+)
RIGHT INSTRUMENT PANEL SPEAKER (-)
RIGHT INSTRUMENT PANEL SPEAKER (+)
AMPLIFIED RIGHT FRONT DOOR SPEAKER (+)
AMPLIFIED RIGHT FRONT DOOR SPEAKER (-)
AMPLIFIER
AMPLIFIED LEFT REAR SPEAKER (+)
AMPLIFIED LEFT REAR SPEAKER (-)
AMPLIFIED LEFT REAR TWEETER (+)
AMPLIFIED LEFT REAR TWEETER (-)
AMPLIFIED RIGHT REAR TWEETER (-)
AMPLIFIED RIGHT REAR TWEETER (+)
AMPLIFIED RIGHT REAR SPEAKER (+)
AMPLIFIED RIGHT REAR SPEAKER (-)
X205 20 GY/LG
X295 20 GY/DG
X214 20 DG/DB
X284 20 DG/TN
X282 20 GY/TN
X212 20 GY/DB
X206 20 DG/LG
X296 20 DG/GY
LEFT REAR SPEAKER
LEFT REAR PILLAR SPEAKER
RIGHT REAR PILLAR SPEAKER
RIGHT REAR SPEAKER

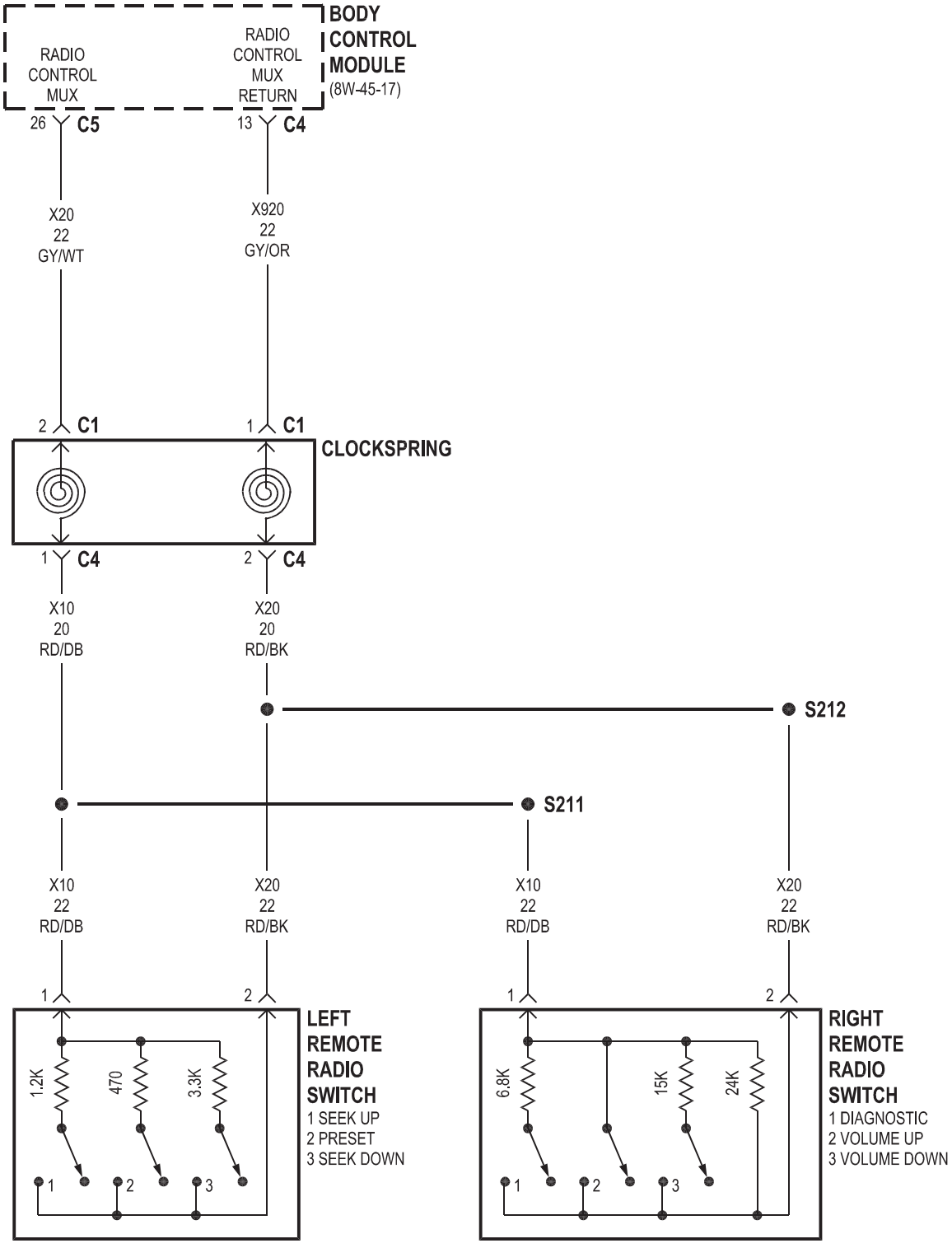
BODY CONTROL MODULE
(8W-45-17)
RADIO CONTROL MUX
RADIO CONTROL MUX RETURN
26 C5
13 C4
X20 22 GY/WT
X920 22 GY/OR
2 C1
1 C1
CLOCKSPRING
1 C4
2 C4
X10 20 RD/DB
X20 20 RD/BK
S212
S211
X10 22 RD/DB
X20 22 RD/BK
X10 22 RD/DB
X20 22 RD/BK
1
2
1
2
1.2K
470
3.3K
1
2
3
LEFT REMOTE RADIO SWITCH
1 SEEK UP
2 PRESET
3 SEEK DOWN
6.8K
15K
24K
1
2
3
RIGHT REMOTE RADIO SWITCH
1 DIAGNOSTIC
2 VOLUME UP
3 VOLUME DOWN

CD CHANGER EXCEPT EXPORT EXCEPT HANDS FREE

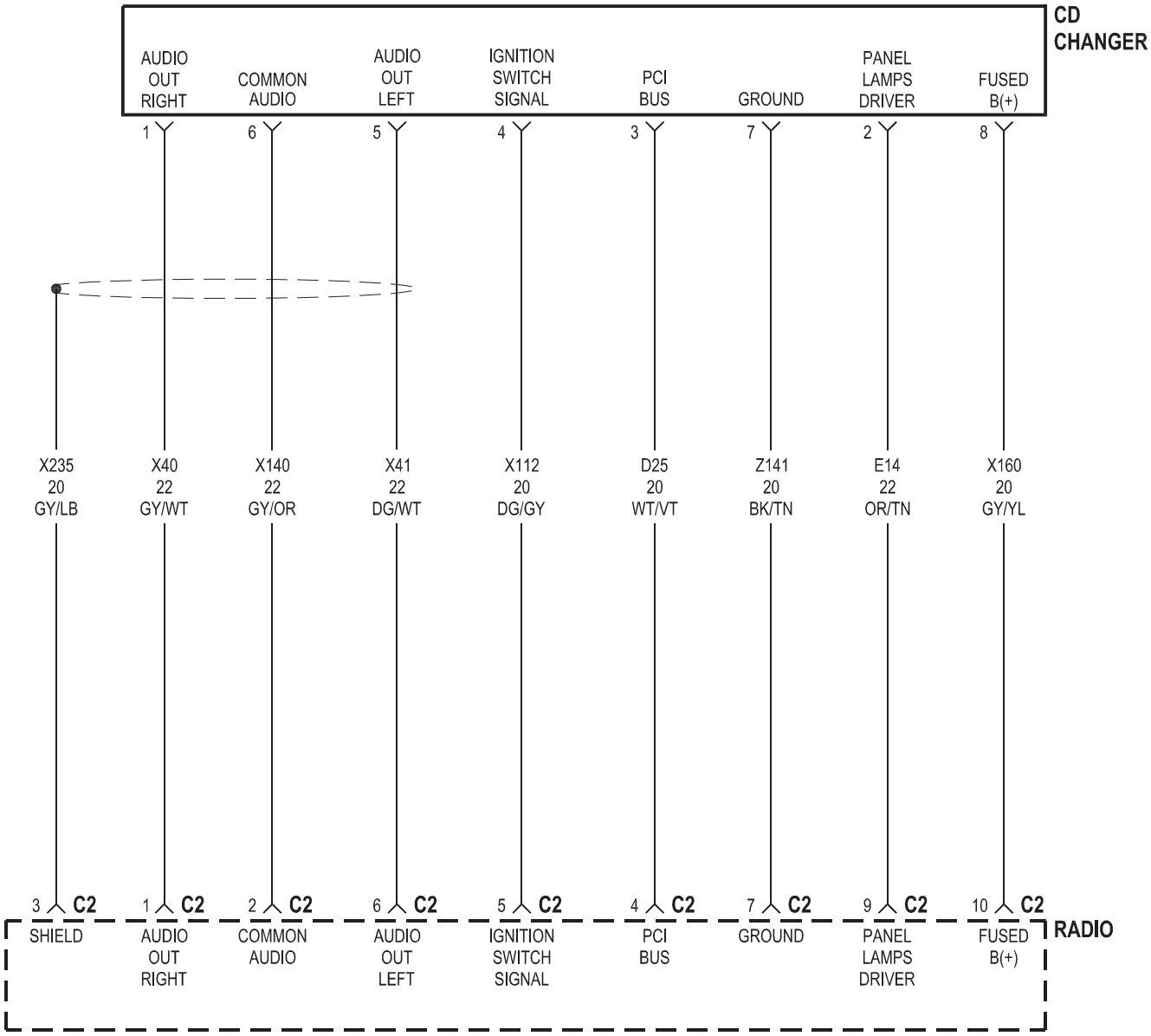

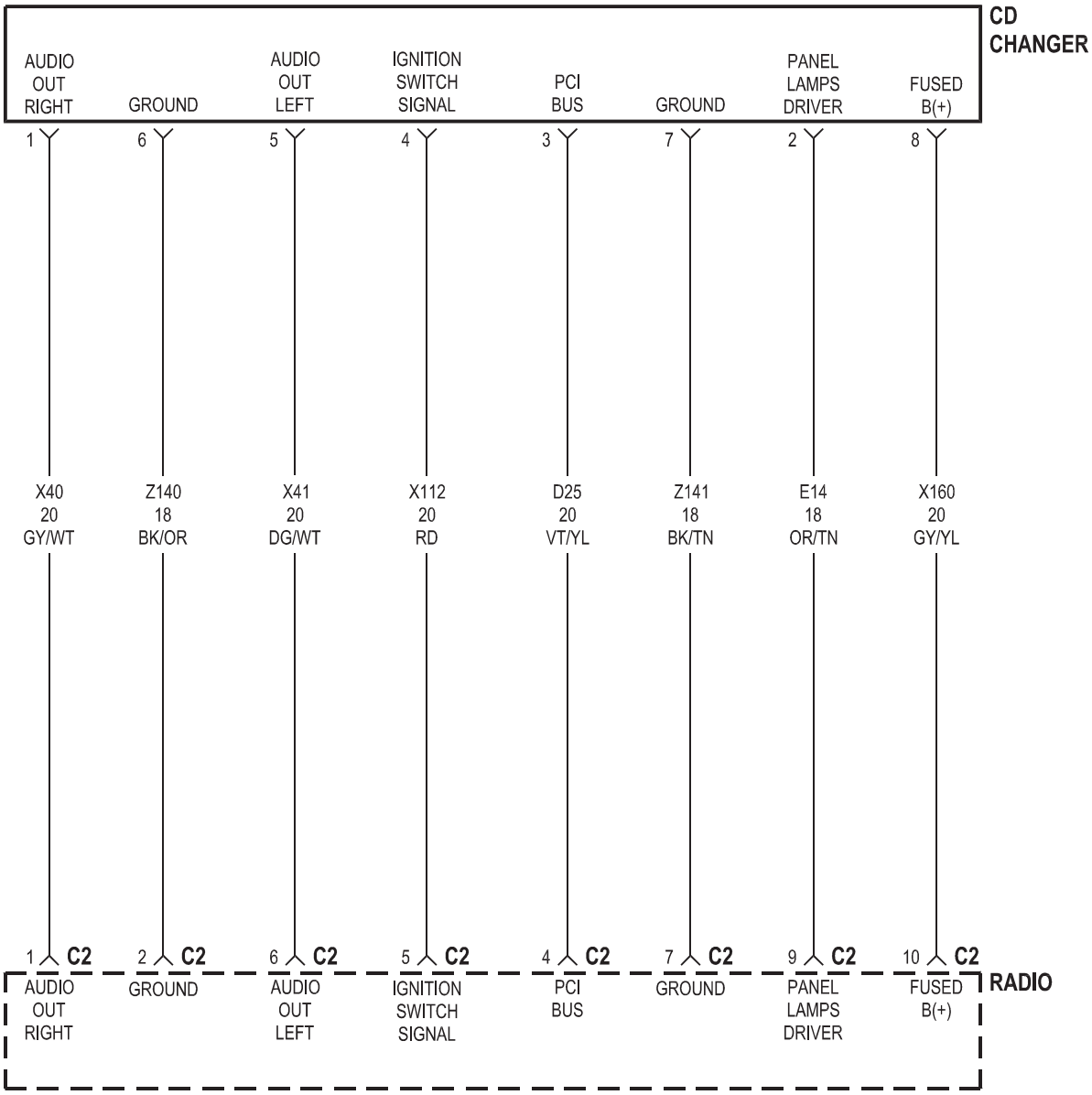
CD CHANGER
AUDIO OUT RIGHT
GROUND
AUDIO OUT LEFT
IGNITION SWITCH SIGNAL
PCI BUS
GROUND
PANEL LAMPS DRIVER
FUSED B(+)
1
6
5
4
3
7
2
8
X40 20 GY/WT
Z140 18 BK/OR
X41 20 DG/WT
X112 20 RD
D25 20 VT/YL
Z141 18 BK/TN
E14 18 OR/TN
X160 20 GY/YL
1 C2
2 C2
6 C2
5 C2
4 C2
7 C2
9 C2
10 C2
AUDIO OUT RIGHT
GROUND
AUDIO OUT LEFT
IGNITION SWITCH SIGNAL
PCI BUS
GROUND
PANEL LAMPS DRIVER
FUSED B(+)
RADIO

CD CHANGER/HANDS FREE

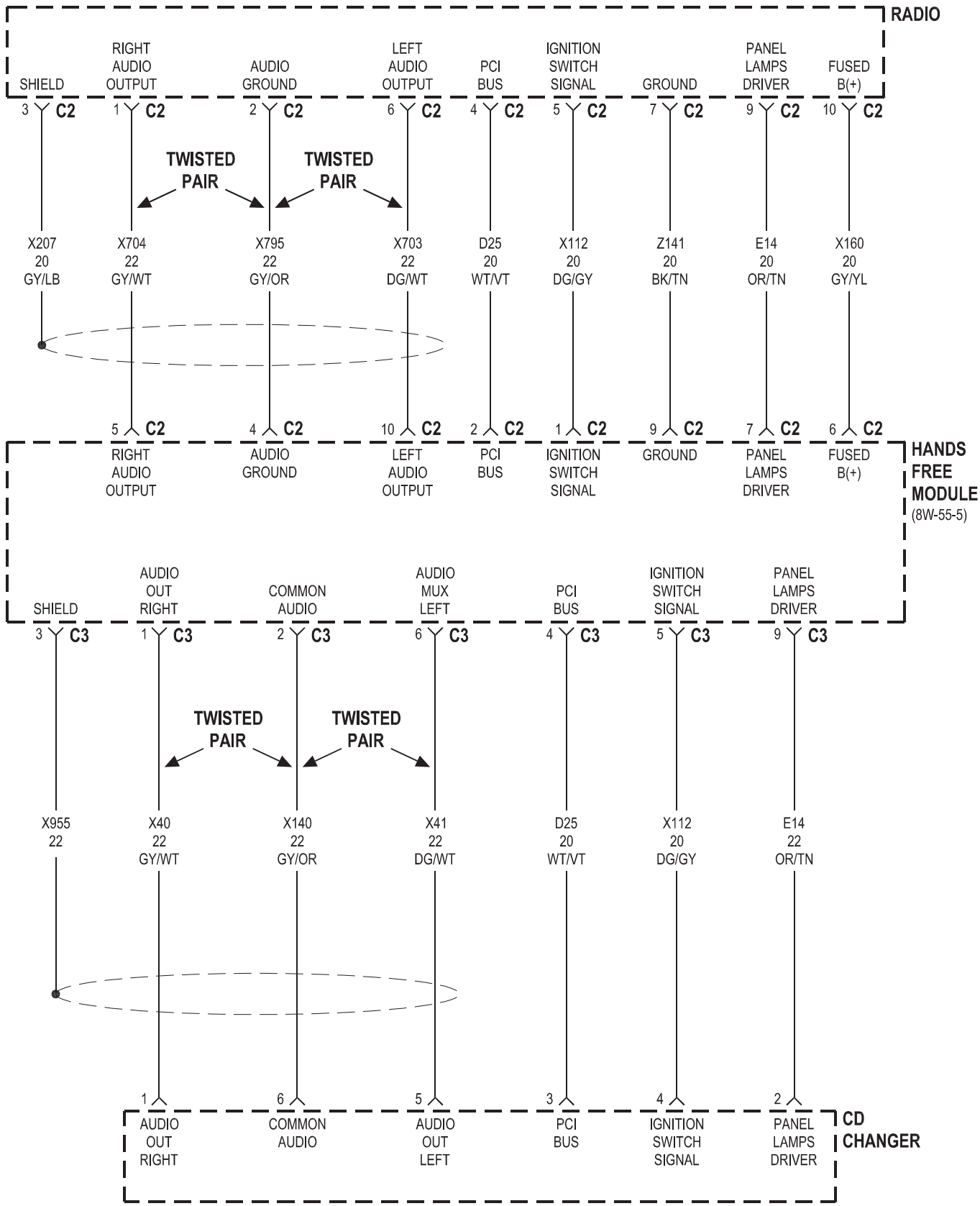

DVD/CD CHANGER EXCEPT HANDS FREE

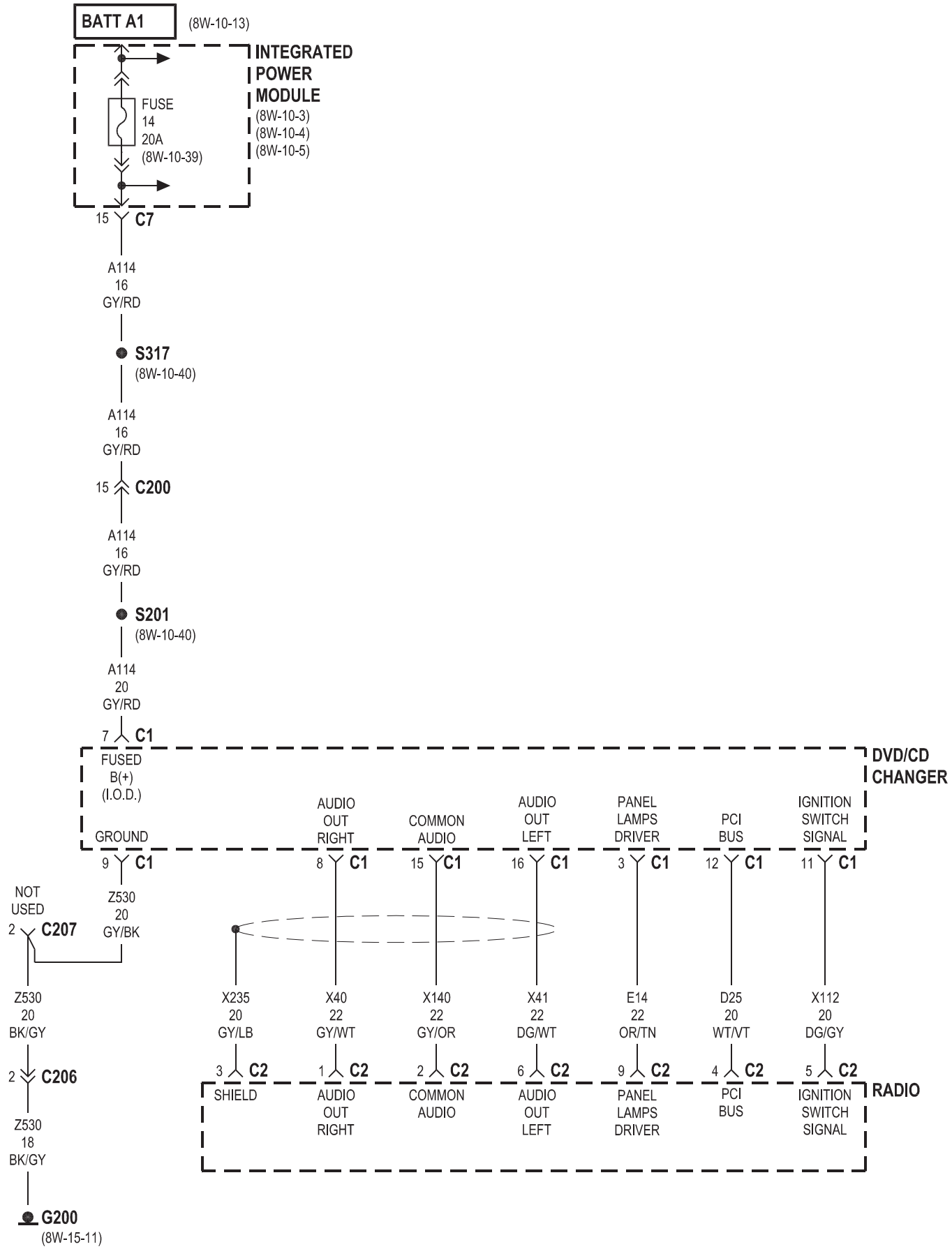

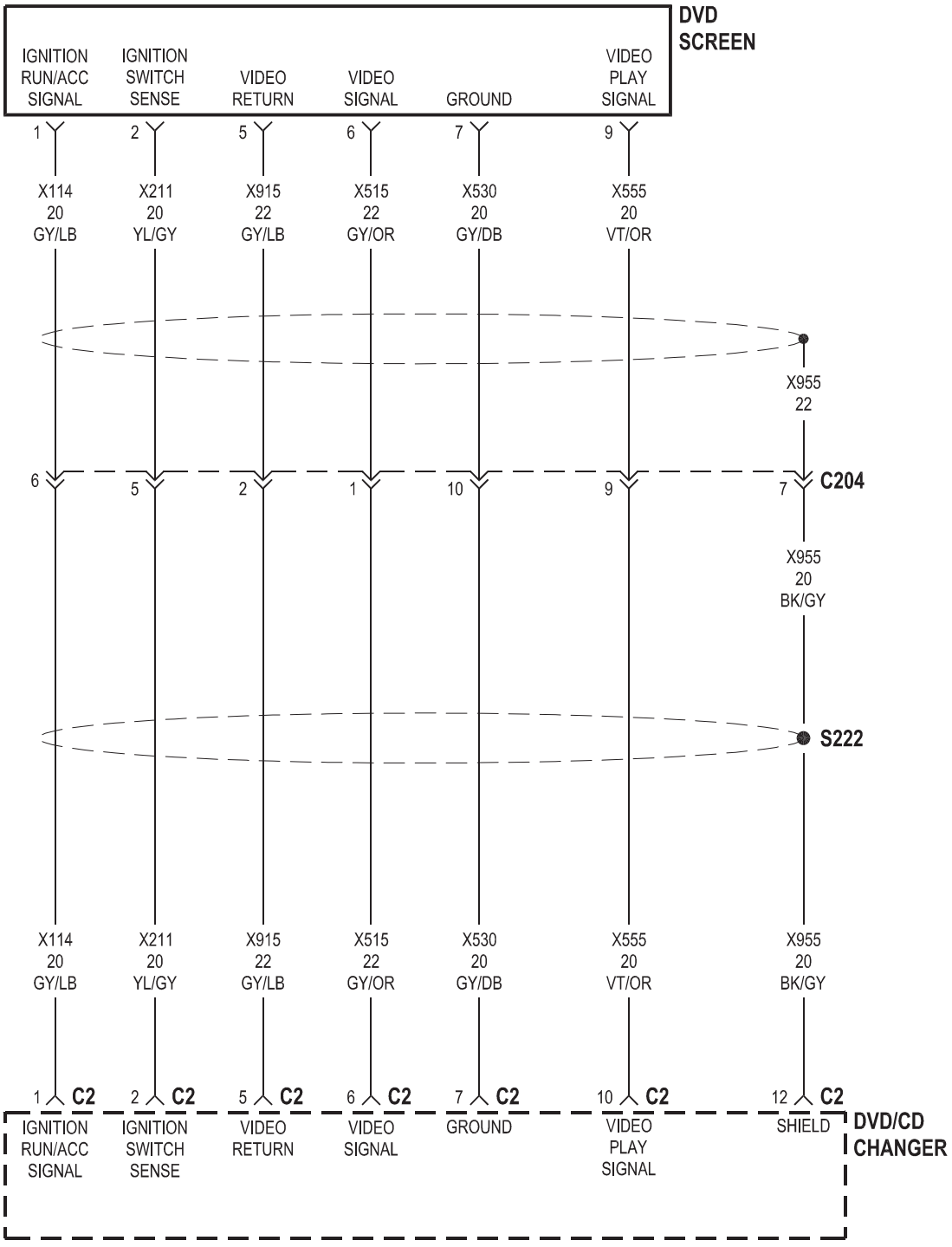
DVD SCREEN
IGNITION RUN/ACC SIGNAL
IGNITION SWITCH SENSE
VIDEO RETURN
VIDEO SIGNAL
GROUND
VIDEO PLAY SIGNAL
1
2
5
6
7
9
X114 20 GY/LB
X211 20 YL/GY
X915 22 GY/LB
X515 22 GY/OR
X530 20 GY/DB
X555 20 VT/OR
X955 22
C204
X955 20 BK/GY
S222
C2
SHIELD
DVD/CD CHANGER

DVD/CD CHANGER/HANDS FREE

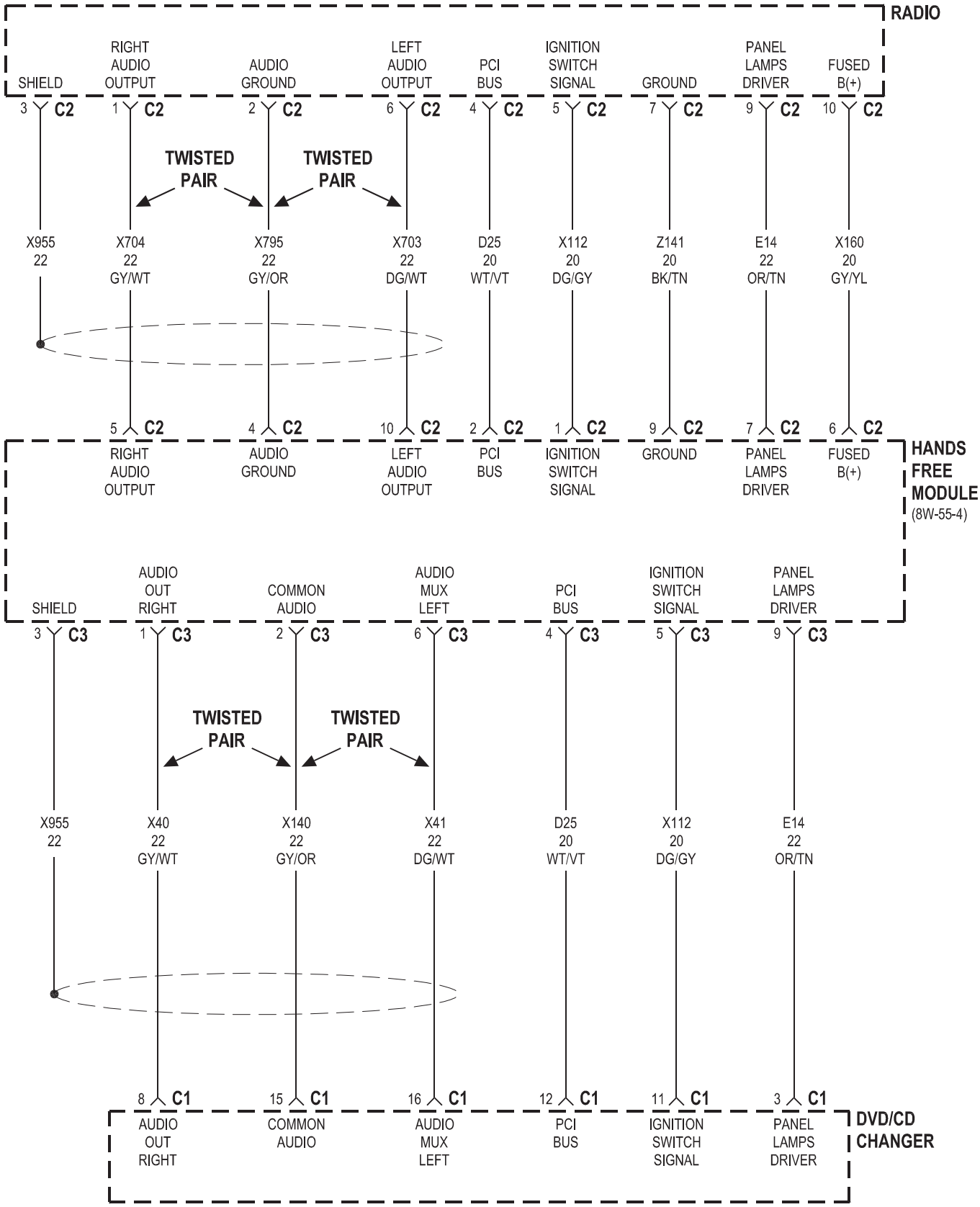

8W-48 REAR WINDOW DEFOGGER

Component	Page
Accessory Relay	8W-48-2
Defogger Relay	8W-48-2
Front Control Module	8W-48-2
Fuse 11	8W-48-2
Fuse 13	8W-48-2
G200	8W-48-3
G303	8W-48-2
Integrated Power Module	8W-48-2
Left Power Mirror	8W-48-3
PTC 4	8W-48-2
Rear Window Defogger Grid	8W-48-2
Rear Wiper Motor	8W-48-2
Right Power Mirror	8W-48-3

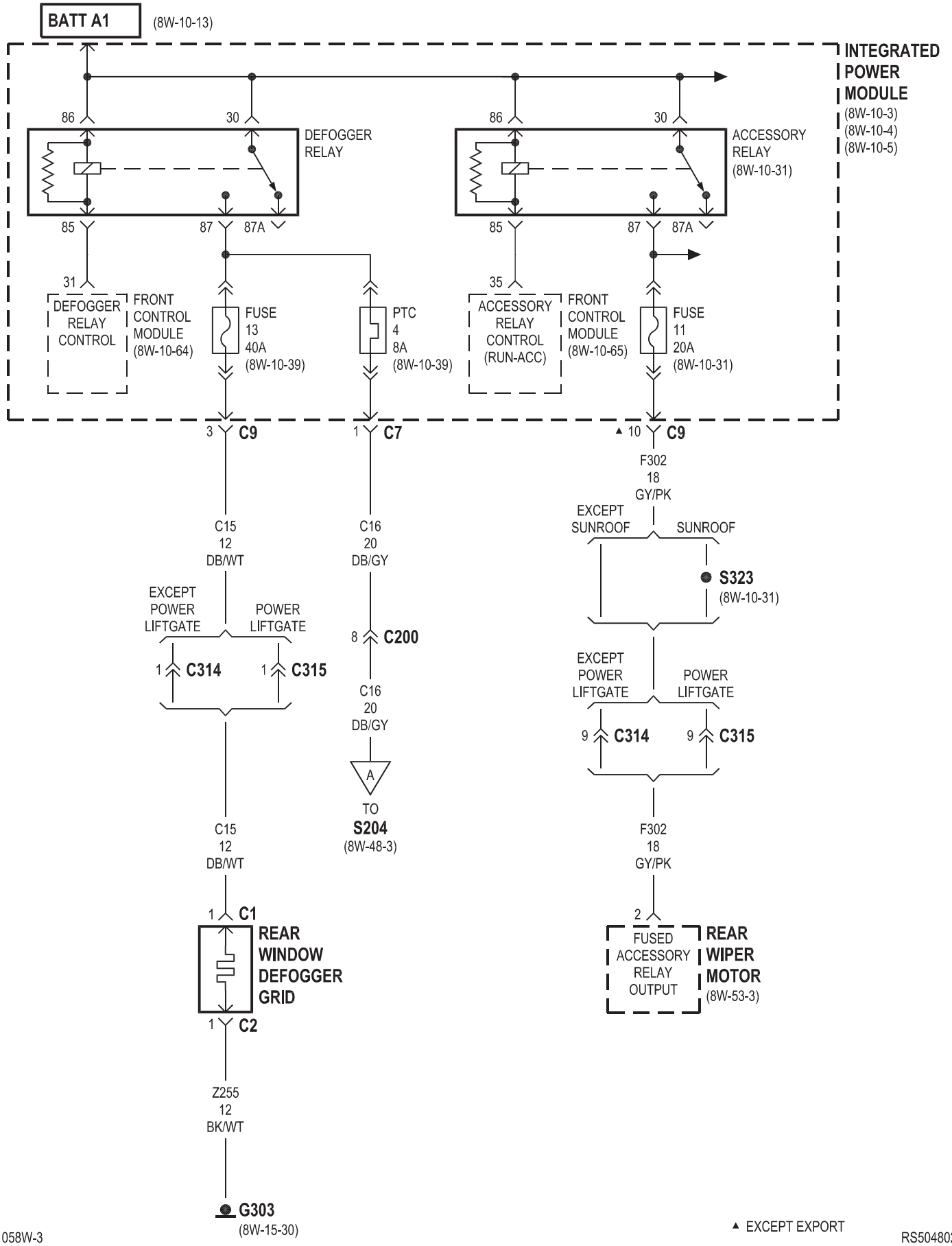

▲ EXCEPT EXPORT

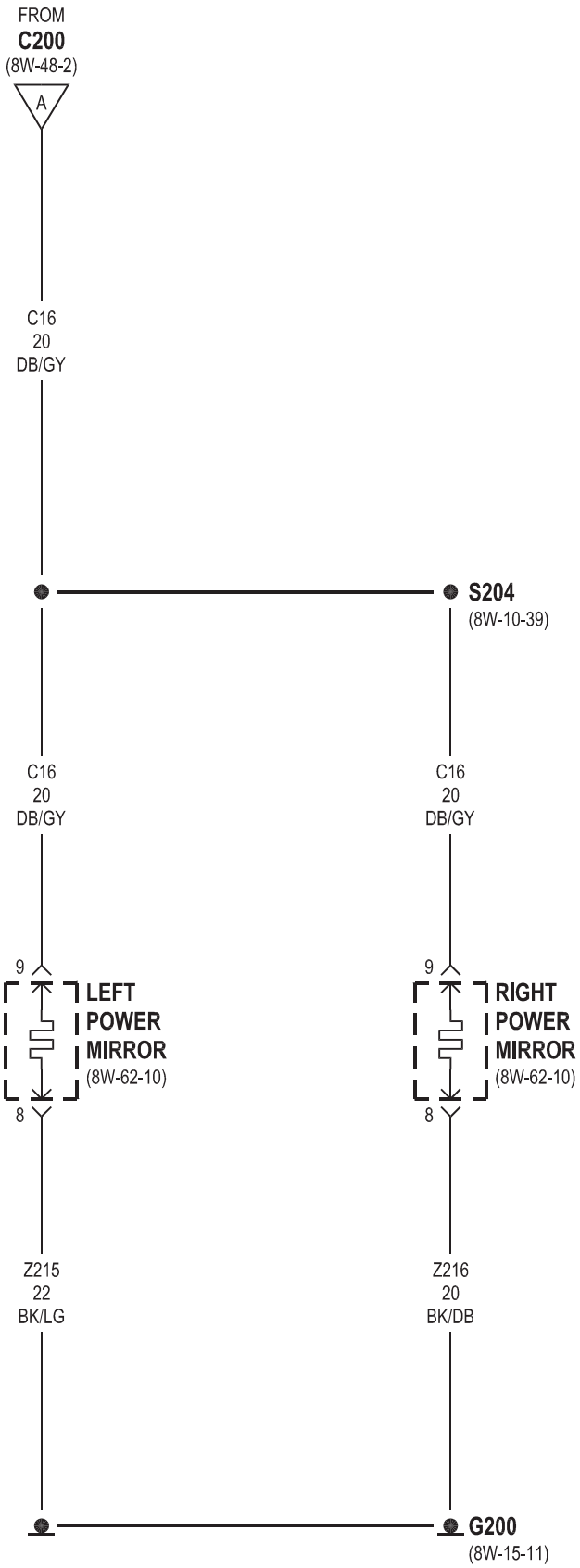
FROM
C200
(8W-48-2)
A
C16
20
DB/GY
S204
(8W-10-39)
C16
20
DB/GY
C16
20
DB/GY
9
LEFT
POWER
MIRROR
(8W-62-10)
8
9
RIGHT
POWER
MIRROR
(8W-62-10)
8
Z215
22
BK/LG
Z216
20
BK/DB
G200
(8W-15-11)

8W-49 OVERHEAD CONSOLE

Component	Page
Ambient Temperature Sensor	8W-49-2
Body Control Module	8W-49-2, 3, 4
Front Control Module	8W-49-2
Front Reading Lamps/Switch	8W-49-4
Fuse 14	8W-49-2
G301	8W-49-4
Hands Free Module	8W-49-3
Integrated Power Module	8W-49-2
Left Power Mirror	8W-49-3
Overhead Console	8W-49-2, 3, 4
Powertrain Control Module	8W-49-2
Rear View Mirror	8W-49-3, 4

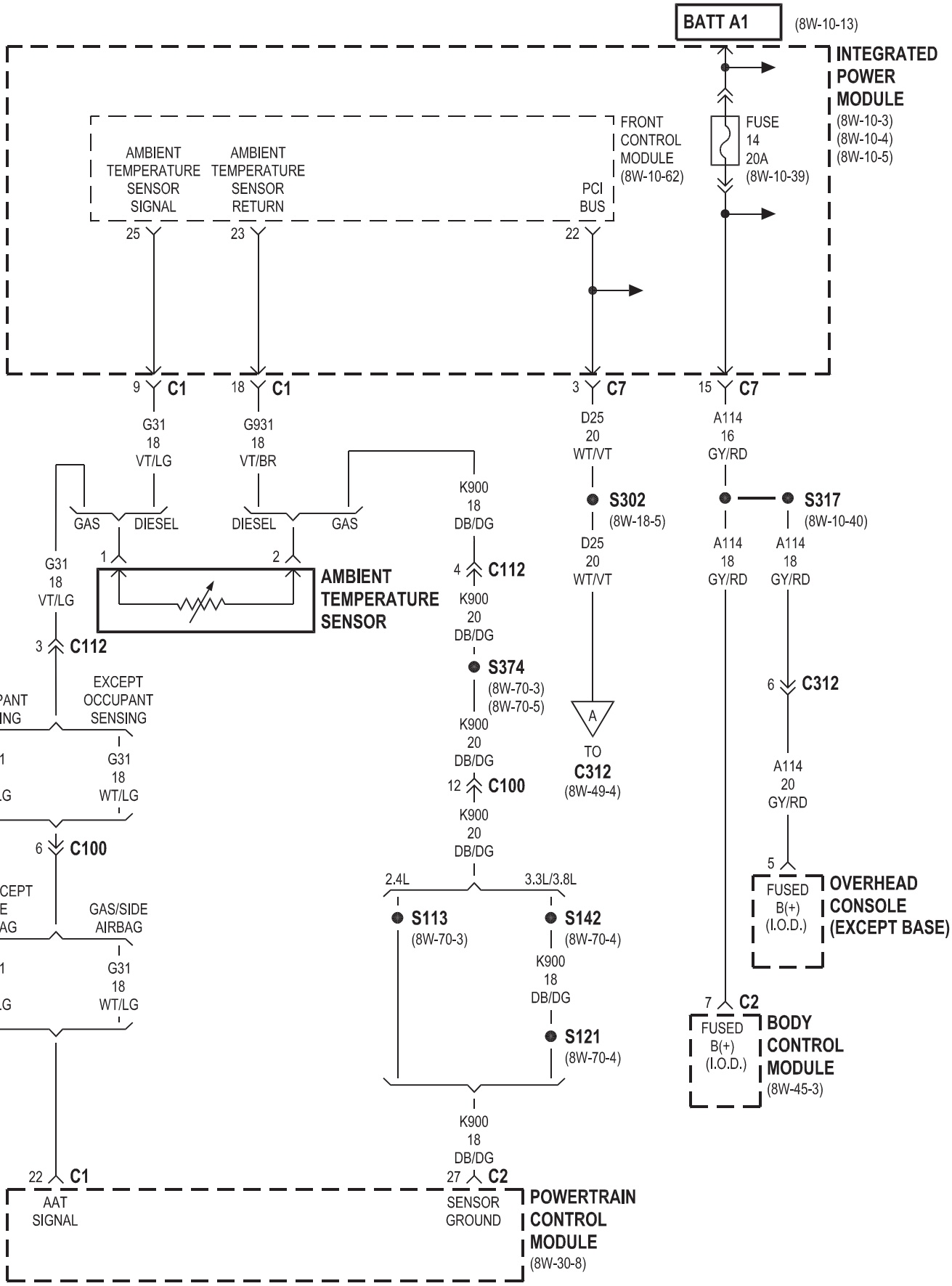
BATT A1
(8W-10-13)
INTEGRATED POWER MODULE
(8W-10-3)
(8W-10-4)
(8W-10-5)
FRONT CONTROL MODULE
(8W-10-62)
FUSE 14 20A
(8W-10-39)
AMBIENT TEMPERATURE SENSOR SIGNAL
AMBIENT TEMPERATURE SENSOR RETURN
PCI BUS
25
23
22
9 C1
18 C1
3 C7
15 C7
G31 18 VT/LG
G931 18 VT/BR
D25 20 WT/VT
A114 16 GY/RD
GAS
DIESEL
DIESEL
GAS
K900 18 DB/DG
S302
(8W-18-5)
S317
(8W-10-40)
G31 18 VT/LG
1
2
AMBIENT TEMPERATURE SENSOR
4 C112
D25 20 WT/VT
A114 18 GY/RD
A114 18 GY/RD
3 C112
K900 20 DB/DG
S374
(8W-70-3)
(8W-70-5)
6 C312
OCCUPANT SENSING
EXCEPT OCCUPANT SENSING
K900 20 DB/DG
A
TO C312
(8W-49-4)
A114 20 GY/RD
G31 18 VT/LG
G31 18 WT/LG
12 C100
5
6 C100
K900 20 DB/DG
FUSED B(+) (I.O.D.)
OVERHEAD CONSOLE (EXCEPT BASE)
2.4L
3.3L/3.8L
GAS/EXCEPT SIDE AIRBAG
GAS/SIDE AIRBAG
S113
(8W-70-3)
S142
(8W-70-4)
7 C2
K900 18 DB/DG
FUSED B(+) (I.O.D.)
BODY CONTROL MODULE
(8W-45-3)
S121
(8W-70-4)
K900 18 DB/DG
22 C1
27 C2
AAT SIGNAL
SENSOR GROUND
POWERTRAIN CONTROL MODULE
(8W-30-8)

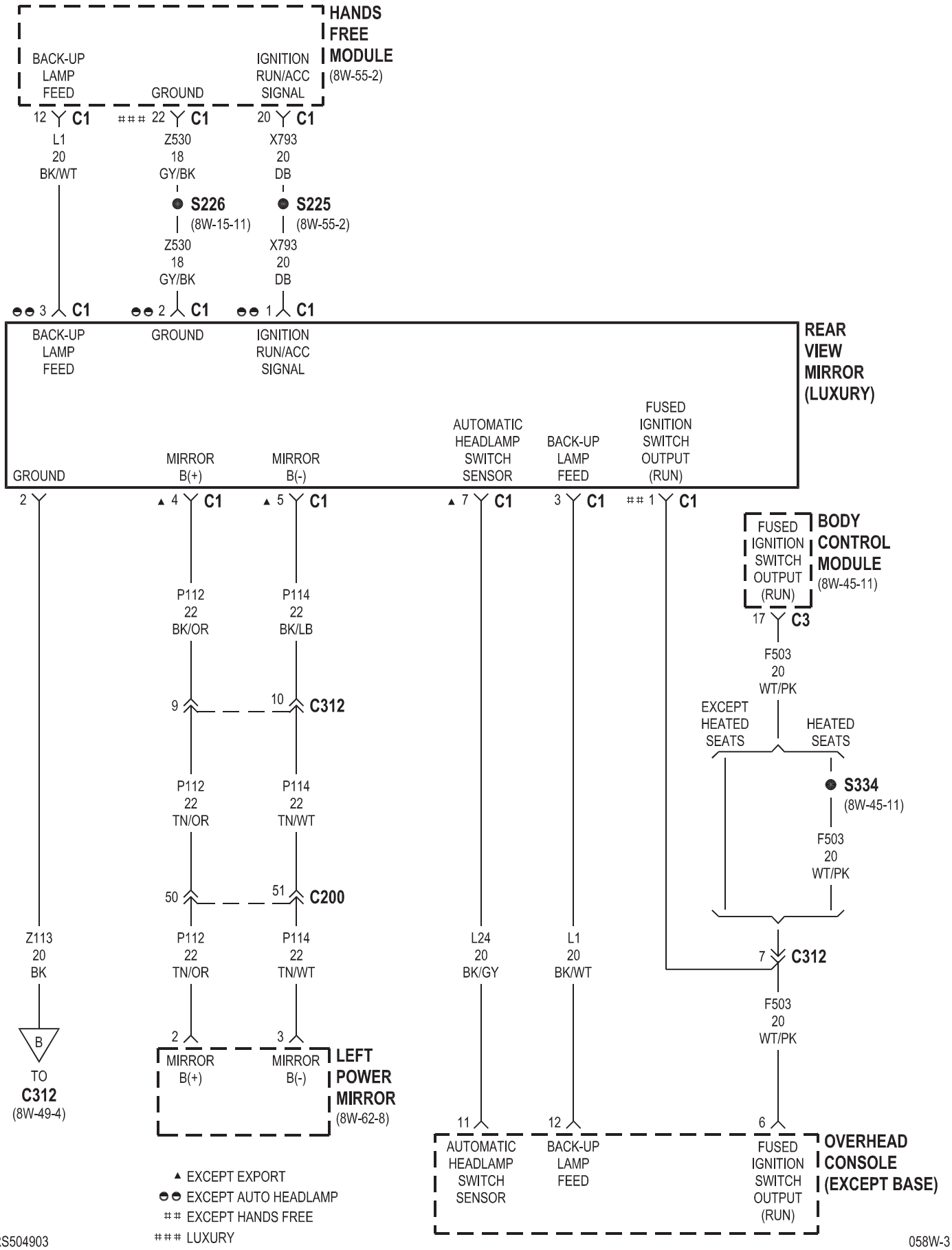
HANDS FREE MODULE (8W-55-2)
BACK-UP LAMP FEED
GROUND
IGNITION RUN/ACC SIGNAL
12 C1
22 C1
20 C1
L1 20 BK/WT
Z530 18 GY/BK
X793 20 DB
S226 (8W-15-11)
S225 (8W-55-2)
Z530 18 GY/BK
X793 20 DB
3 C1
2 C1
1 C1
BACK-UP LAMP FEED
GROUND
IGNITION RUN/ACC SIGNAL
REAR VIEW MIRROR (LUXURY)
GROUND
MIRROR B(+)
MIRROR B(-)
AUTOMATIC HEADLAMP SWITCH SENSOR
BACK-UP LAMP FEED
FUSED IGNITION SWITCH OUTPUT (RUN)
2
▲ 4 C1
▲ 5 C1
▲ 7 C1
3 C1
1 C1
P112 22 BK/OR
P114 22 BK/LB
9
10 C312
P112 22 TN/OR
P114 22 TN/WT
50
51 C200
P112 22 TN/OR
P114 22 TN/WT
Z113 20 BK
B
TO C312 (8W-49-4)
2
3
MIRROR B(+)
MIRROR B(-)
LEFT POWER MIRROR (8W-62-8)
L24 20 BK/GY
L1 20 BK/WT
FUSED IGNITION SWITCH OUTPUT (RUN)
BODY CONTROL MODULE (8W-45-11)
17 C3
F503 20 WT/PK
EXCEPT HEATED SEATS
HEATED SEATS
S334 (8W-45-11)
F503 20 WT/PK
7 C312
F503 20 WT/PK
11
12
6
AUTOMATIC HEADLAMP SWITCH SENSOR
BACK-UP LAMP FEED
FUSED IGNITION SWITCH OUTPUT (RUN)
OVERHEAD CONSOLE (EXCEPT BASE)
▲ EXCEPT EXPORT
EXCEPT AUTO HEADLAMP
EXCEPT HANDS FREE
LUXURY

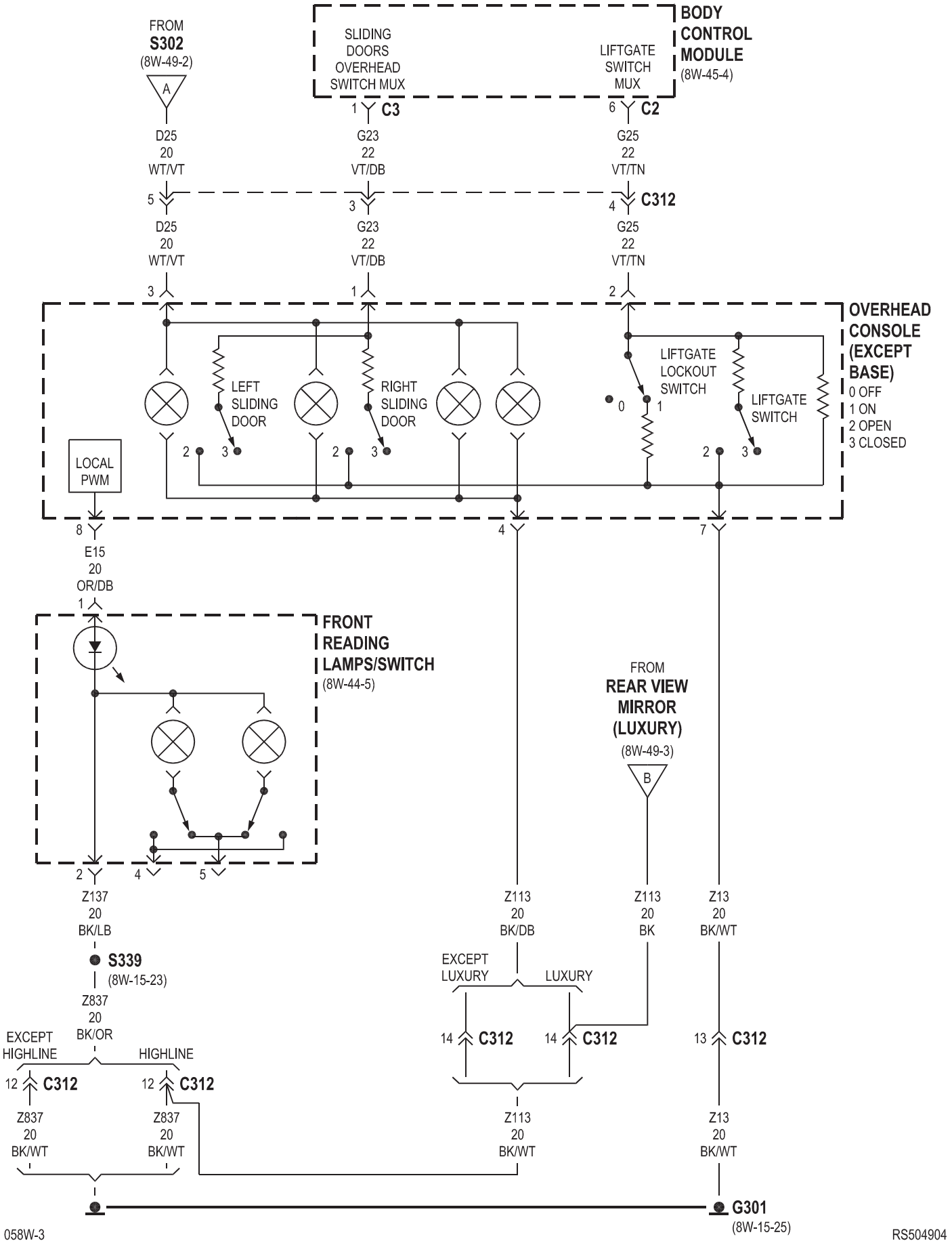
FROM
S302
(8W-49-2)
A
D25
20
WT/VT
5
D25
20
WT/VT
3
SLIDING
DOORS
OVERHEAD
SWITCH MUX
1
C3
G23
22
VT/DB
3
G23
22
VT/DB
1
LIFTGATE
SWITCH
MUX
6
C2
G25
22
VT/TN
4
C312
G25
22
VT/TN
2
BODY
CONTROL
MODULE
(8W-45-4)
OVERHEAD
CONSOLE
(EXCEPT
BASE)
0 OFF
1 ON
2 OPEN
3 CLOSED
LEFT
SLIDING
DOOR
RIGHT
SLIDING
DOOR
LIFTGATE
LOCKOUT
SWITCH
LIFTGATE
SWITCH
LOCAL
PWM
8
E15
20
OR/DB
1
4
7
FRONT
READING
LAMPS/SWITCH
(8W-44-5)
2
4
5
Z137
20
BK/LB
S339
(8W-15-23)
Z837
20
BK/OR
EXCEPT
HIGHLINE
HIGHLINE
12
C312
12
C312
Z837
20
BK/WT
Z837
20
BK/WT
FROM
REAR VIEW
MIRROR
(LUXURY)
(8W-49-3)
B
Z113
20
BK/DB
Z113
20
BK
Z13
20
BK/WT
EXCEPT
LUXURY
LUXURY
14
C312
14
C312
13
C312
Z113
20
BK/WT
Z13
20
BK/WT
G301
(8W-15-25)

8W-50 FRONT LIGHTING

Component	Page
Body Control Module	8W-50-2, 4, 5
Front Control Module	8W-50-3, 4, 6, 7, 8, 9, 10
Front Fog Lamp Relay	8W-50-10
Fuse 1	8W-50-10
Fuse 2	8W-50-4, 6
Fuse 3	8W-50-4, 6
G102	8W-50-4, 6, 10
G200	8W-50-2, 9
G300	8W-50-3
Headlamp Switch	8W-50-2, 9
Integrated Power Module	8W-50-3, 4, 5, 6, 7, 8, 9, 10
Left Fog Lamp	8W-50-10
Left Front Park/Turn Signal Lamp	8W-50-4
Left Headlamp	8W-50-3
Left Headlamp Leveling Motor	8W-50-6, 9
Left High Beam Lamp	8W-50-6, 7
Left Low Beam Lamp	8W-50-7
Left Park Lamp	8W-50-6, 7
Multi-Function Switch	8W-50-5
Park Lamp Relay	8W-50-4, 6
Right Fog Lamp	8W-50-10
Right Front Park/Turn Signal Lamp	8W-50-4
Right Headlamp	8W-50-3
Right Headlamp Leveling Motor	8W-50-6, 9
Right High Beam Lamp	8W-50-6, 8
Right Low Beam Lamp	8W-50-8
Right Park Lamp	8W-50-6, 8

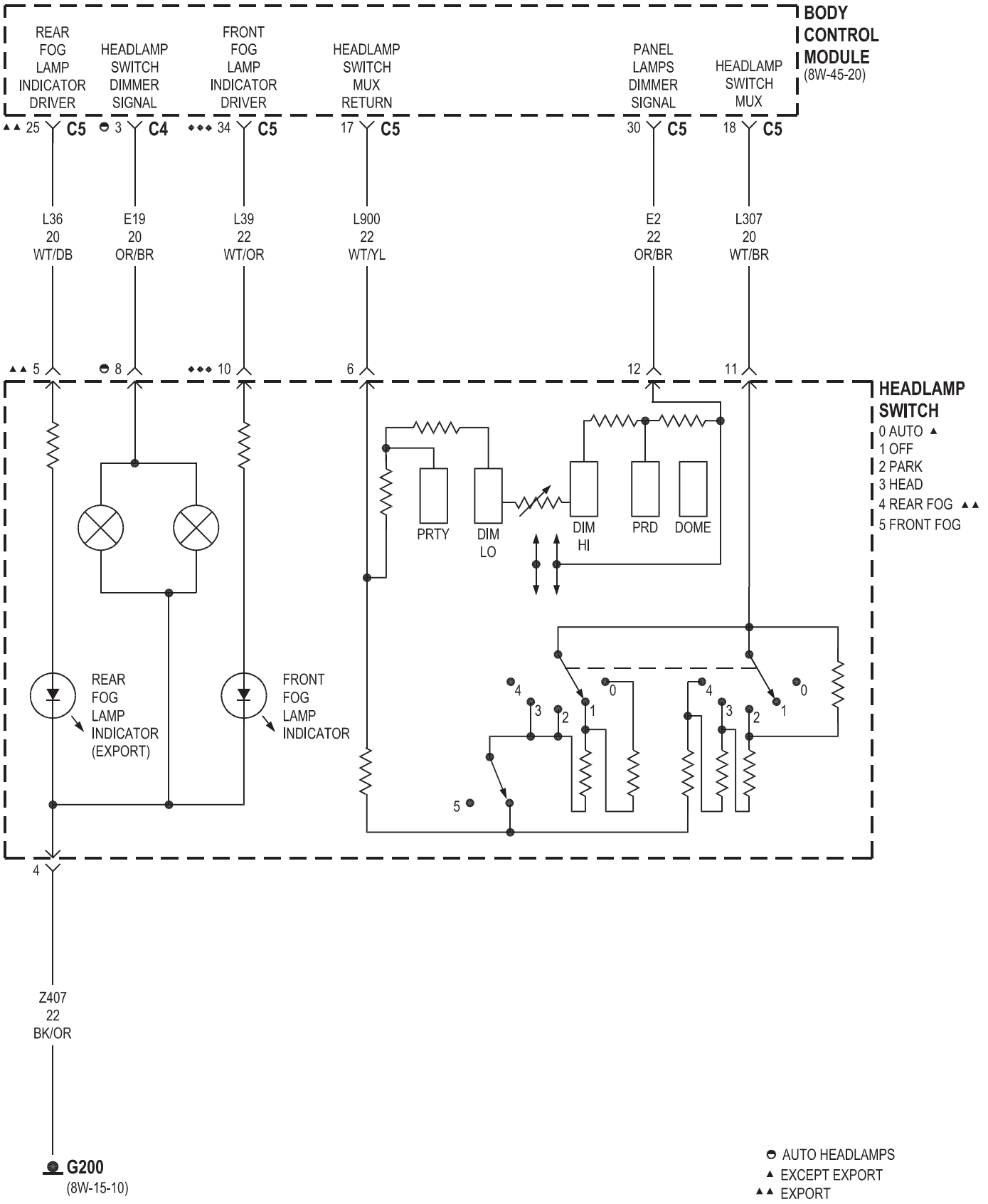
BODY CONTROL MODULE
(8W-45-20)
REAR FOG LAMP INDICATOR DRIVER
HEADLAMP SWITCH DIMMER SIGNAL
FRONT FOG LAMP INDICATOR DRIVER
HEADLAMP SWITCH MUX RETURN
PANEL LAMPS DIMMER SIGNAL
HEADLAMP SWITCH MUX
▲▲ 25 C5
3 C4
◆◆◆ 34 C5
17 C5
30 C5
18 C5
L36 20 WT/DB
E19 20 OR/BR
L39 22 WT/OR
L900 22 WT/YL
E2 22 OR/BR
L307 20 WT/BR
▲▲ 5
8
◆◆◆ 10
6
12
11
HEADLAMP SWITCH
0 AUTO ▲
1 OFF
2 PARK
3 HEAD
4 REAR FOG ▲▲
5 FRONT FOG
PRTY
DIM LO
DIM HI
PRD
DOME
REAR FOG LAMP INDICATOR (EXPORT)
FRONT FOG LAMP INDICATOR
4
Z407 22 BK/OR
G200
(8W-15-10)
AUTO HEADLAMPS
▲ EXCEPT EXPORT
▲▲ EXPORT
◆◆◆ HIGHLINE

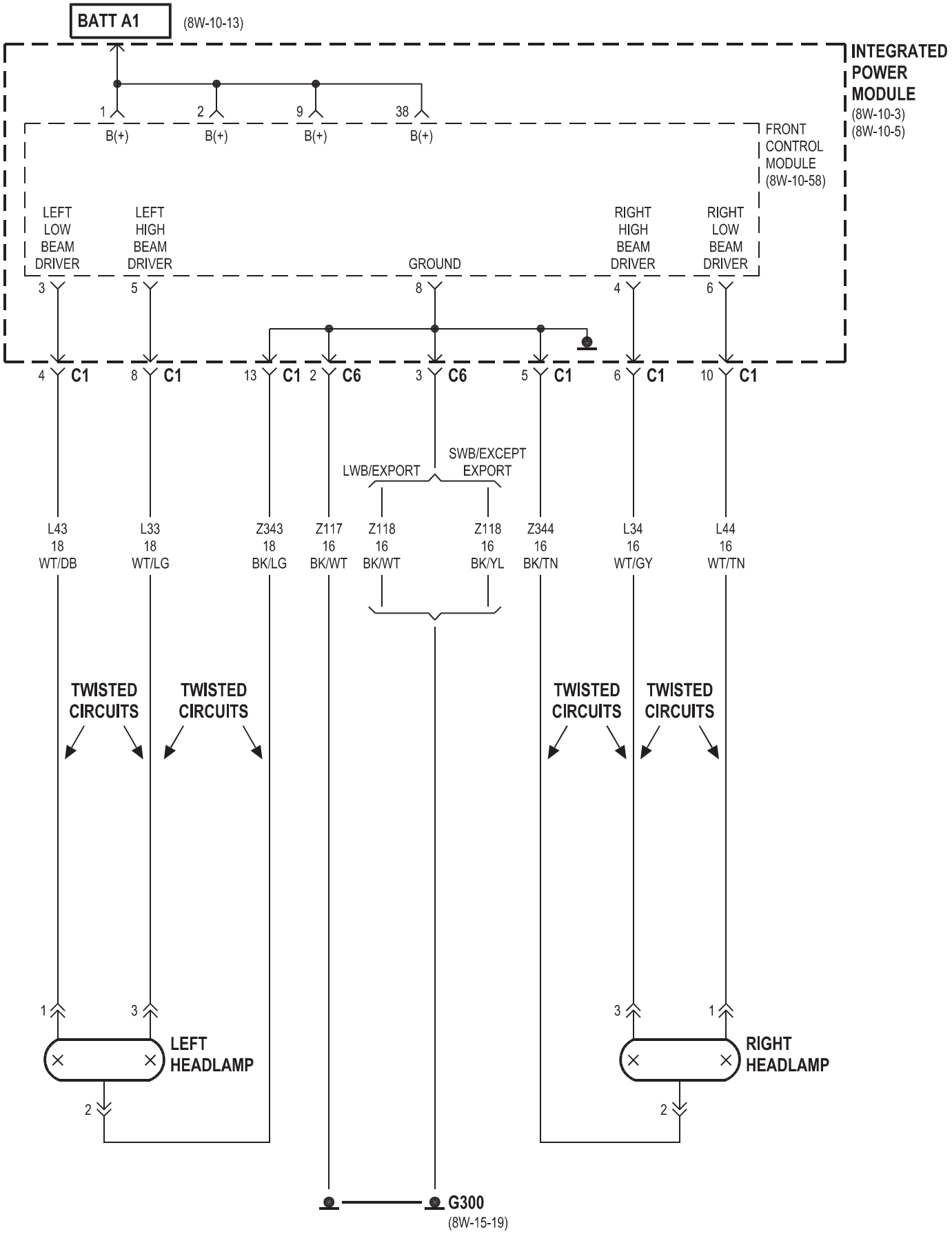
BATT A1
(8W-10-13)
INTEGRATED POWER MODULE
(8W-10-3)
(8W-10-5)
FRONT CONTROL MODULE
(8W-10-58)
1 B(+)
2 B(+)
9 B(+)
38 B(+)
LEFT LOW BEAM DRIVER
LEFT HIGH BEAM DRIVER
GROUND
RIGHT HIGH BEAM DRIVER
RIGHT LOW BEAM DRIVER
3
5
8
4
6
4 C1
8 C1
13 C1
2 C6
3 C6
5 C1
6 C1
10 C1
LWB/EXPORT
SWB/EXCEPT EXPORT
L43 18 WT/DB
L33 18 WT/LG
Z343 18 BK/LG
Z117 16 BK/WT
Z118 16 BK/WT
Z118 16 BK/YL
Z344 16 BK/TN
L34 16 WT/GY
L44 16 WT/TN
TWISTED CIRCUITS
TWISTED CIRCUITS
TWISTED CIRCUITS
TWISTED CIRCUITS
1
3
2
LEFT HEADLAMP
3
1
2
RIGHT HEADLAMP
G300
(8W-15-19)

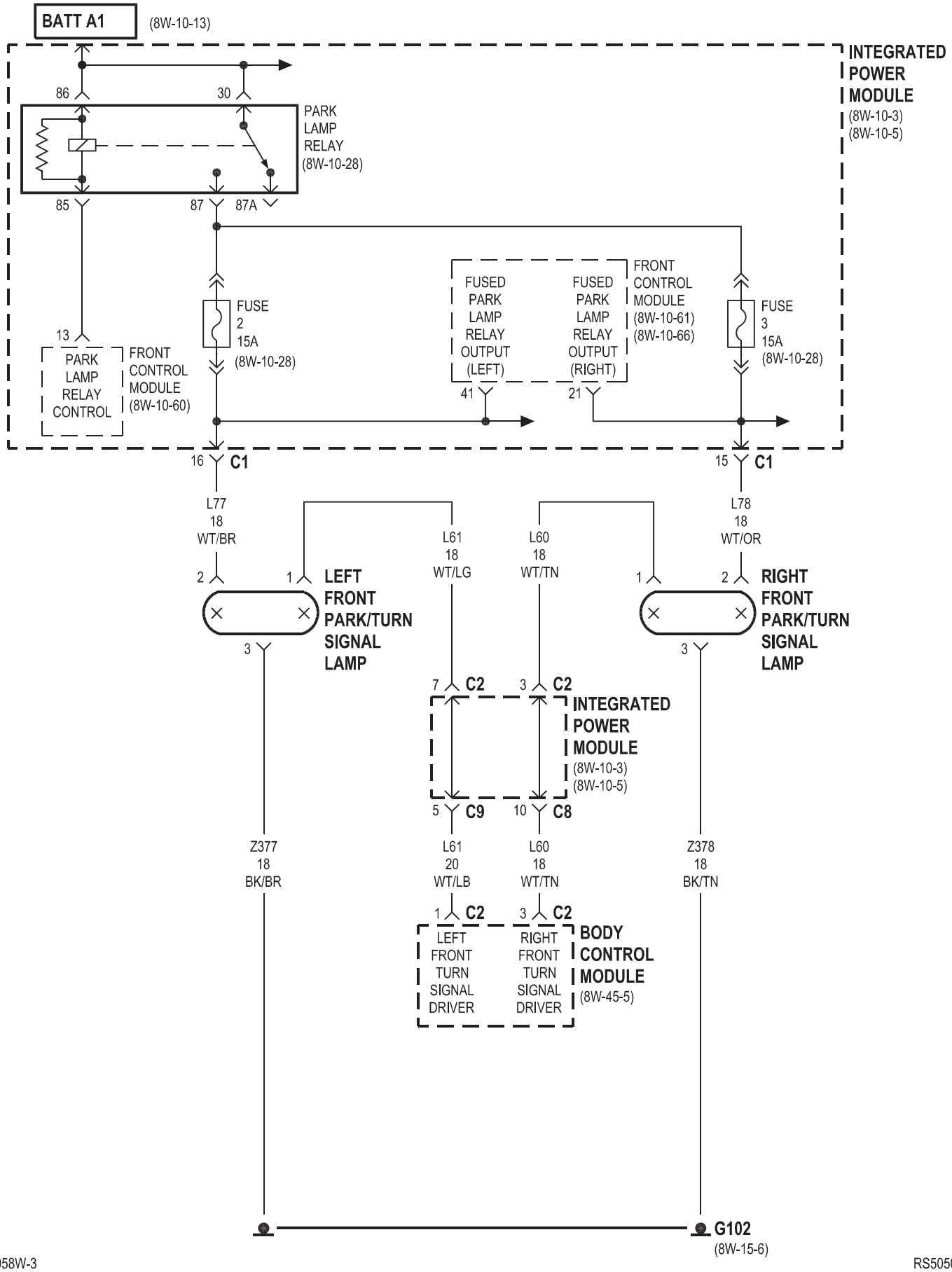
BATT A1
(8W-10-13)
INTEGRATED POWER MODULE
(8W-10-3)
(8W-10-5)
86
30
PARK LAMP RELAY
(8W-10-28)
85
87
87A
13
PARK LAMP RELAY CONTROL
FRONT CONTROL MODULE
(8W-10-60)
FUSE 2 15A
(8W-10-28)
FUSED PARK LAMP RELAY OUTPUT (LEFT)
FUSED PARK LAMP RELAY OUTPUT (RIGHT)
FRONT CONTROL MODULE
(8W-10-61)
(8W-10-66)
41
21
FUSE 3 15A
(8W-10-28)
16 C1
15 C1
L77 18 WT/BR
L61 18 WT/LG
L60 18 WT/TN
L78 18 WT/OR
2
1
LEFT FRONT PARK/TURN SIGNAL LAMP
1
2
RIGHT FRONT PARK/TURN SIGNAL LAMP
3
3
7 C2
3 C2
INTEGRATED POWER MODULE
(8W-10-3)
(8W-10-5)
5 C9
10 C8
Z377 18 BK/BR
L61 20 WT/LB
L60 18 WT/TN
Z378 18 BK/TN
1 C2
3 C2
LEFT FRONT TURN SIGNAL DRIVER
RIGHT FRONT TURN SIGNAL DRIVER
BODY CONTROL MODULE
(8W-45-5)
G102
(8W-15-6)

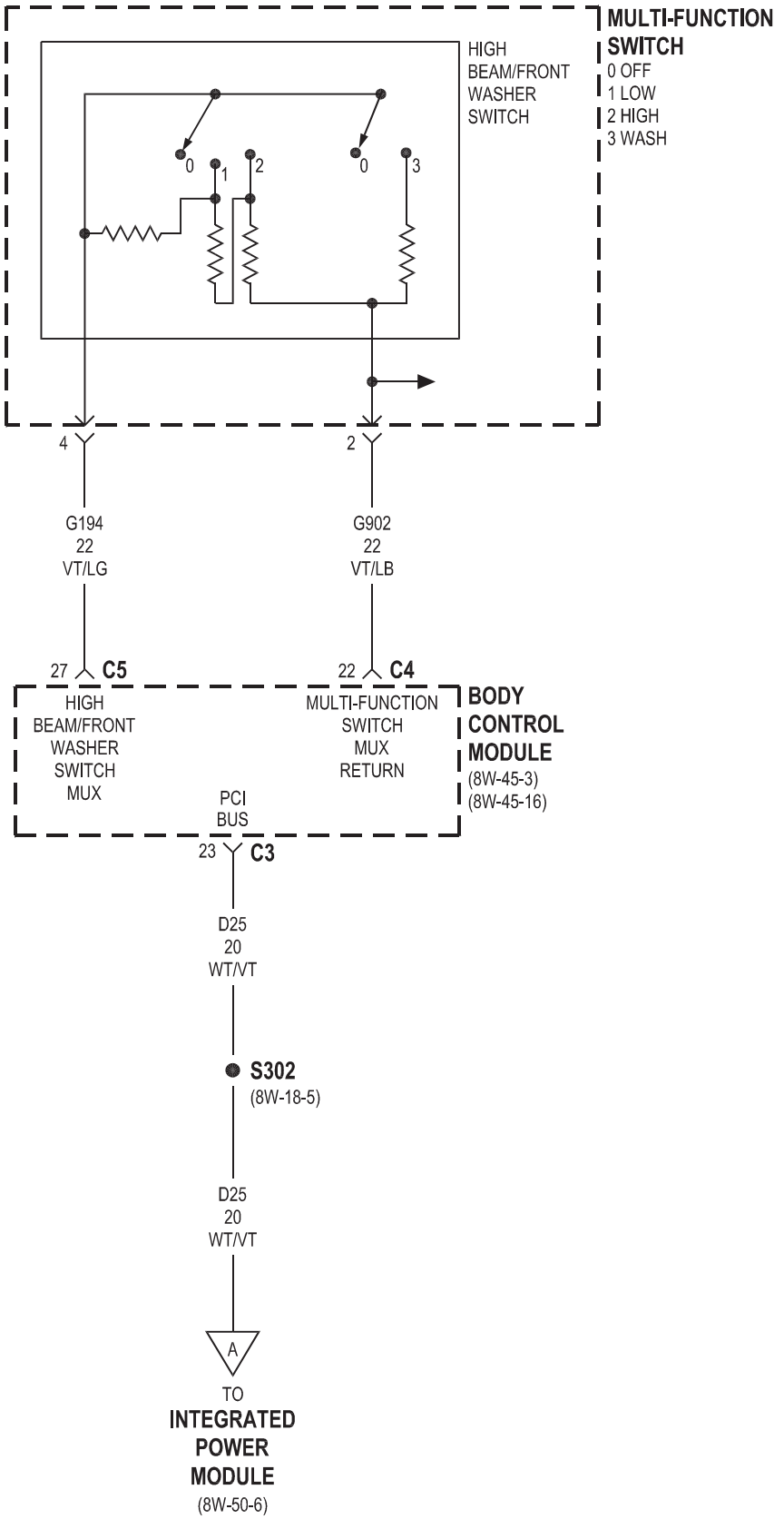
MULTI-FUNCTION SWITCH
0 OFF
1 LOW
2 HIGH
3 WASH
HIGH BEAM/FRONT WASHER SWITCH
0
1
2
0
3
4
2
G194
22
VT/LG
G902
22
VT/LB
27
C5
22
C4
HIGH BEAM/FRONT WASHER SWITCH MUX
MULTI-FUNCTION SWITCH MUX RETURN
BODY CONTROL MODULE
(8W-45-3)
(8W-45-16)
PCI BUS
23
C3
D25
20
WT/VT
S302
(8W-18-5)
D25
20
WT/VT
A
TO
INTEGRATED POWER MODULE
(8W-50-6)

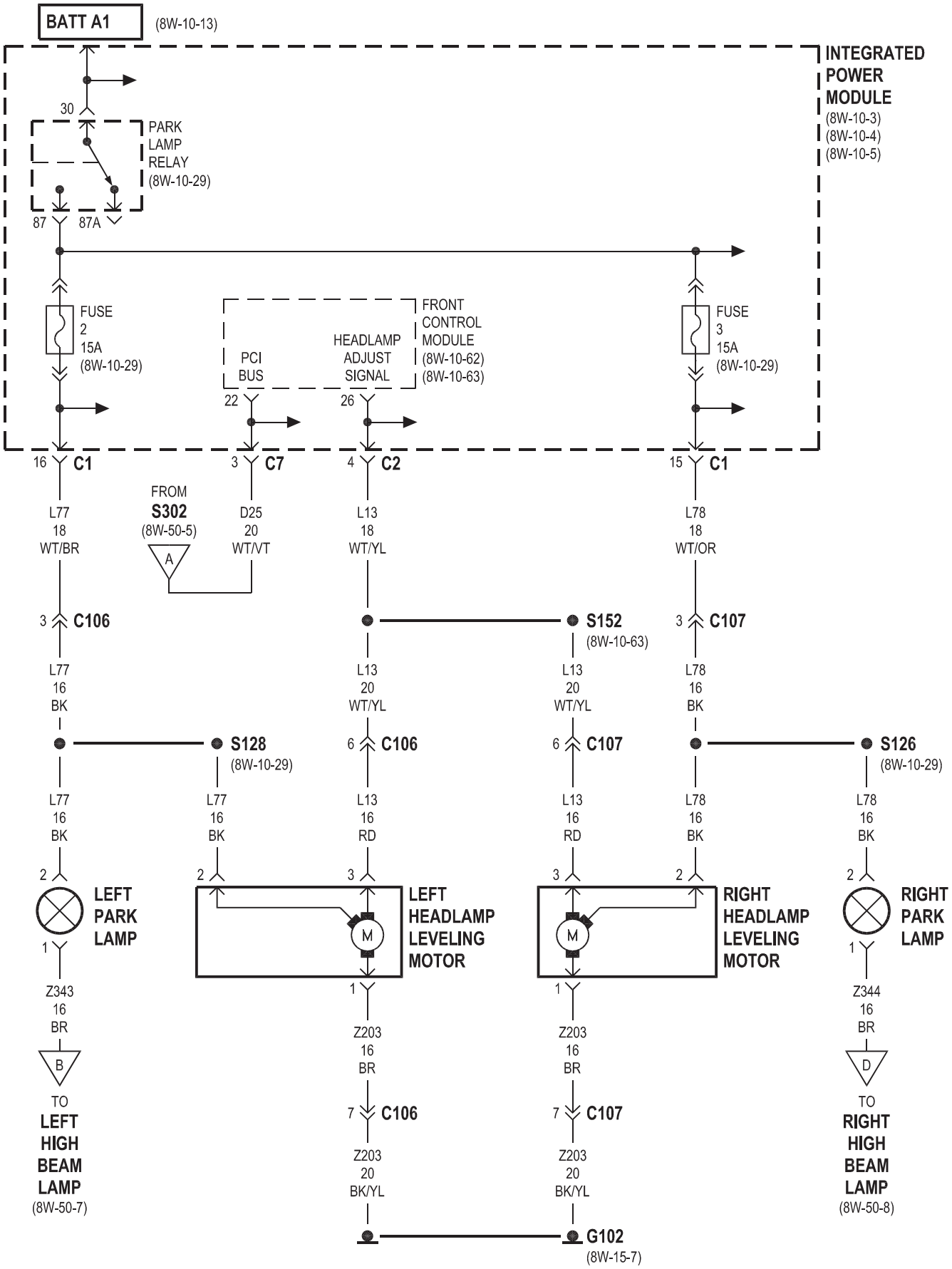
BATT A1
(8W-10-13)
INTEGRATED POWER MODULE
(8W-10-3)
(8W-10-4)
(8W-10-5)
30
PARK LAMP RELAY
(8W-10-29)
87
87A
FUSE 2 15A
(8W-10-29)
PCI BUS
HEADLAMP ADJUST SIGNAL
FRONT CONTROL MODULE
(8W-10-62)
(8W-10-63)
22
26
FUSE 3 15A
(8W-10-29)
16 C1
3 C7
4 C2
15 C1
L77 18 WT/BR
FROM S302
(8W-50-5)
A
D25 20 WT/VT
L13 18 WT/YL
L78 18 WT/OR
3 C106
S152
(8W-10-63)
3 C107
L77 16 BK
L13 20 WT/YL
L78 16 BK
S128
(8W-10-29)
6 C106
6 C107
S126
(8W-10-29)
L77 16 BK
L13 16 RD
L78 16 BK
2
3
LEFT PARK LAMP
LEFT HEADLAMP LEVELING MOTOR
RIGHT HEADLAMP LEVELING MOTOR
RIGHT PARK LAMP
M
1
Z343 16 BR
Z203 16 BR
Z344 16 BR
B
D
TO LEFT HIGH BEAM LAMP
(8W-50-7)
7 C106
7 C107
Z203 20 BK/YL
G102
(8W-15-7)
TO RIGHT HIGH BEAM LAMP
(8W-50-8)

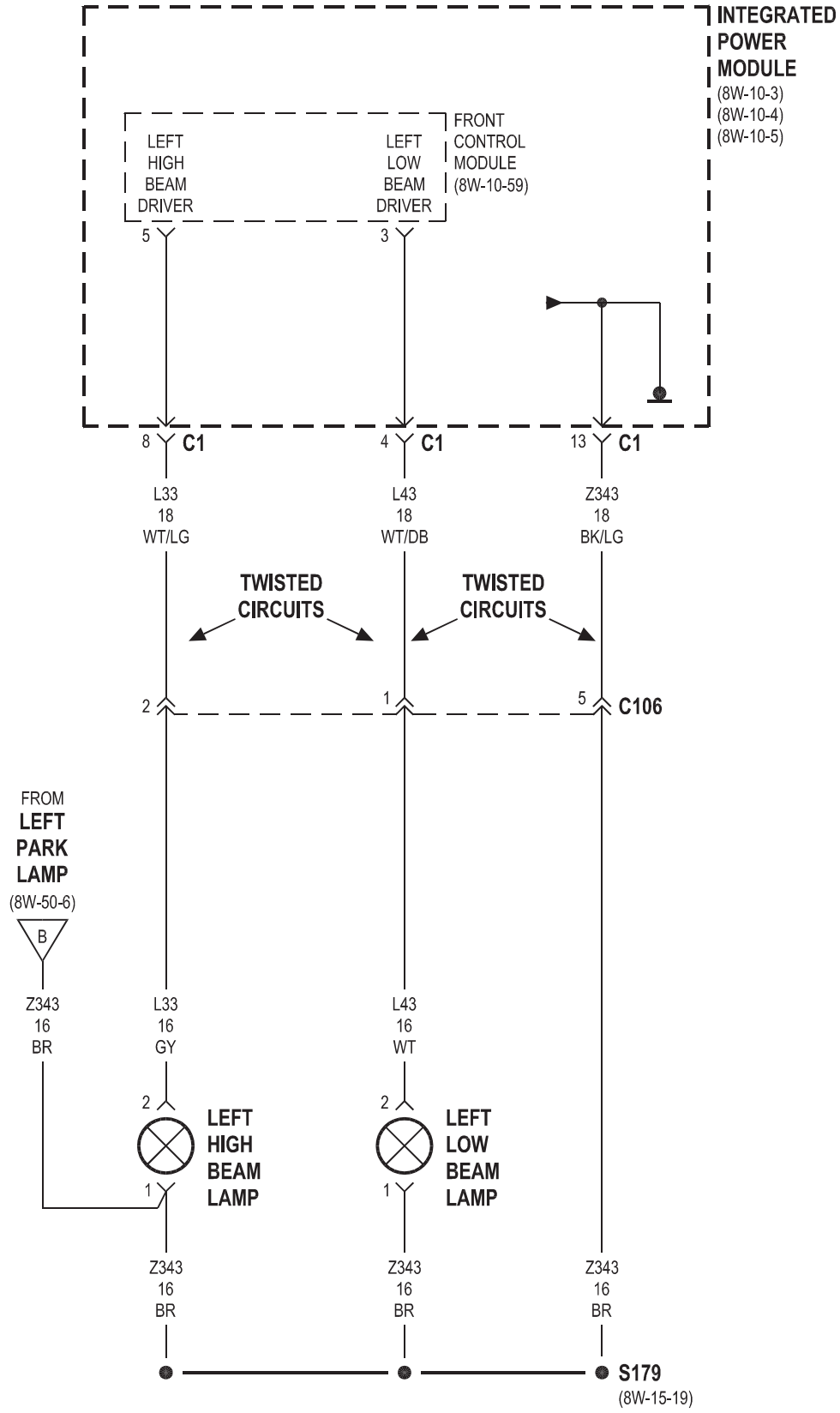
INTEGRATED POWER MODULE
(8W-10-3)
(8W-10-4)
(8W-10-5)
FRONT CONTROL MODULE (8W-10-59)
LEFT HIGH BEAM DRIVER
LEFT LOW BEAM DRIVER
5
3
8 C1
4 C1
13 C1
L33 18 WT/LG
L43 18 WT/DB
Z343 18 BK/LG
TWISTED CIRCUITS
TWISTED CIRCUITS
2
1
5 C106
FROM LEFT PARK LAMP (8W-50-6)
B
Z343 16 BR
L33 16 GY
L43 16 WT
2
2
LEFT HIGH BEAM LAMP
LEFT LOW BEAM LAMP
1
1
Z343 16 BR
Z343 16 BR
Z343 16 BR
S179
(8W-15-19)

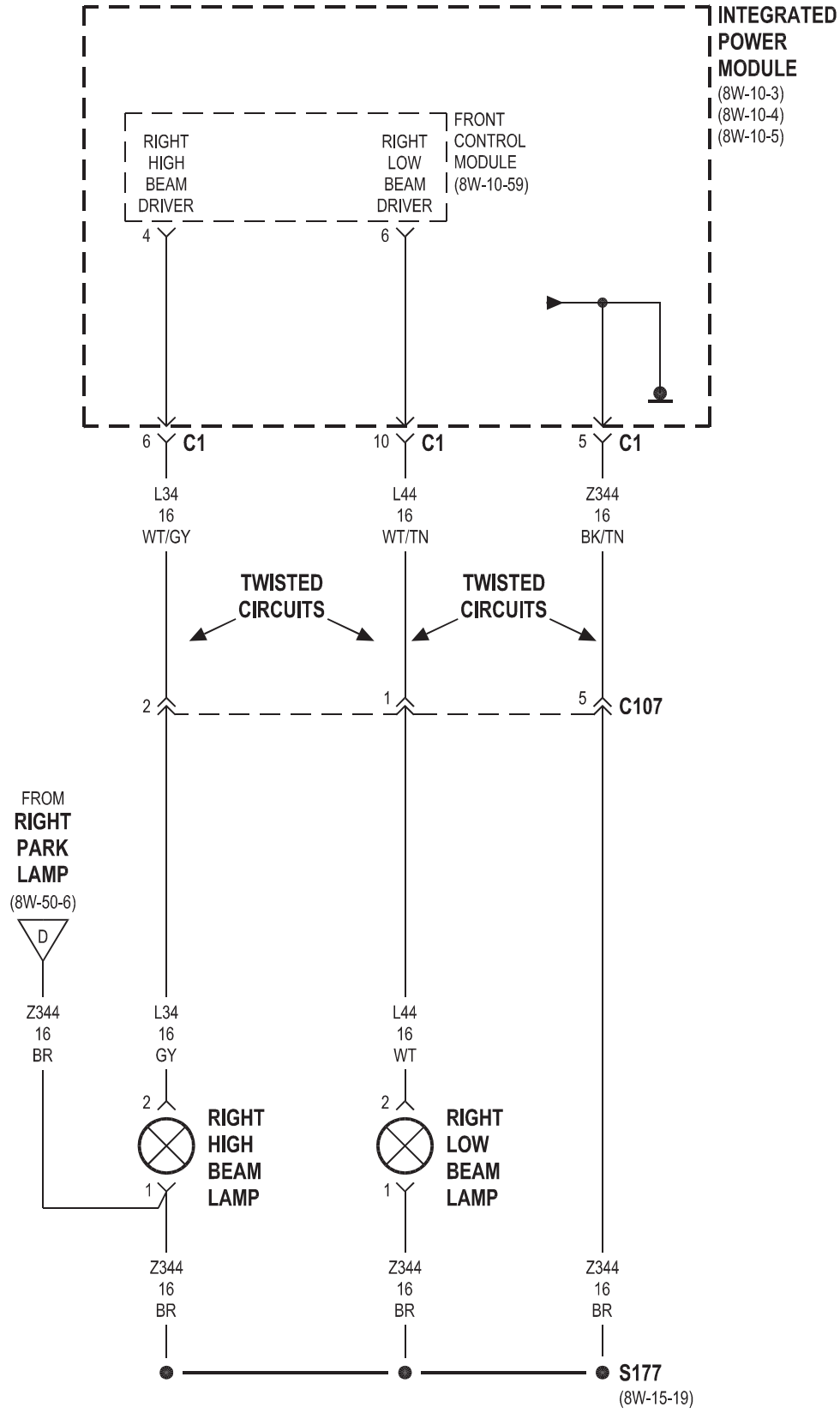
INTEGRATED POWER MODULE
(8W-10-3)
(8W-10-4)
(8W-10-5)
FRONT CONTROL MODULE (8W-10-59)
RIGHT HIGH BEAM DRIVER
RIGHT LOW BEAM DRIVER
4
6
6 C1
10 C1
5 C1
L34 16 WT/GY
L44 16 WT/TN
Z344 16 BK/TN
TWISTED CIRCUITS
TWISTED CIRCUITS
2
1
5 C107
FROM RIGHT PARK LAMP (8W-50-6)
D
Z344 16 BR
L34 16 GY
L44 16 WT
2
2
RIGHT HIGH BEAM LAMP
RIGHT LOW BEAM LAMP
1
1
Z344 16 BR
Z344 16 BR
Z344 16 BR
S177
(8W-15-19)

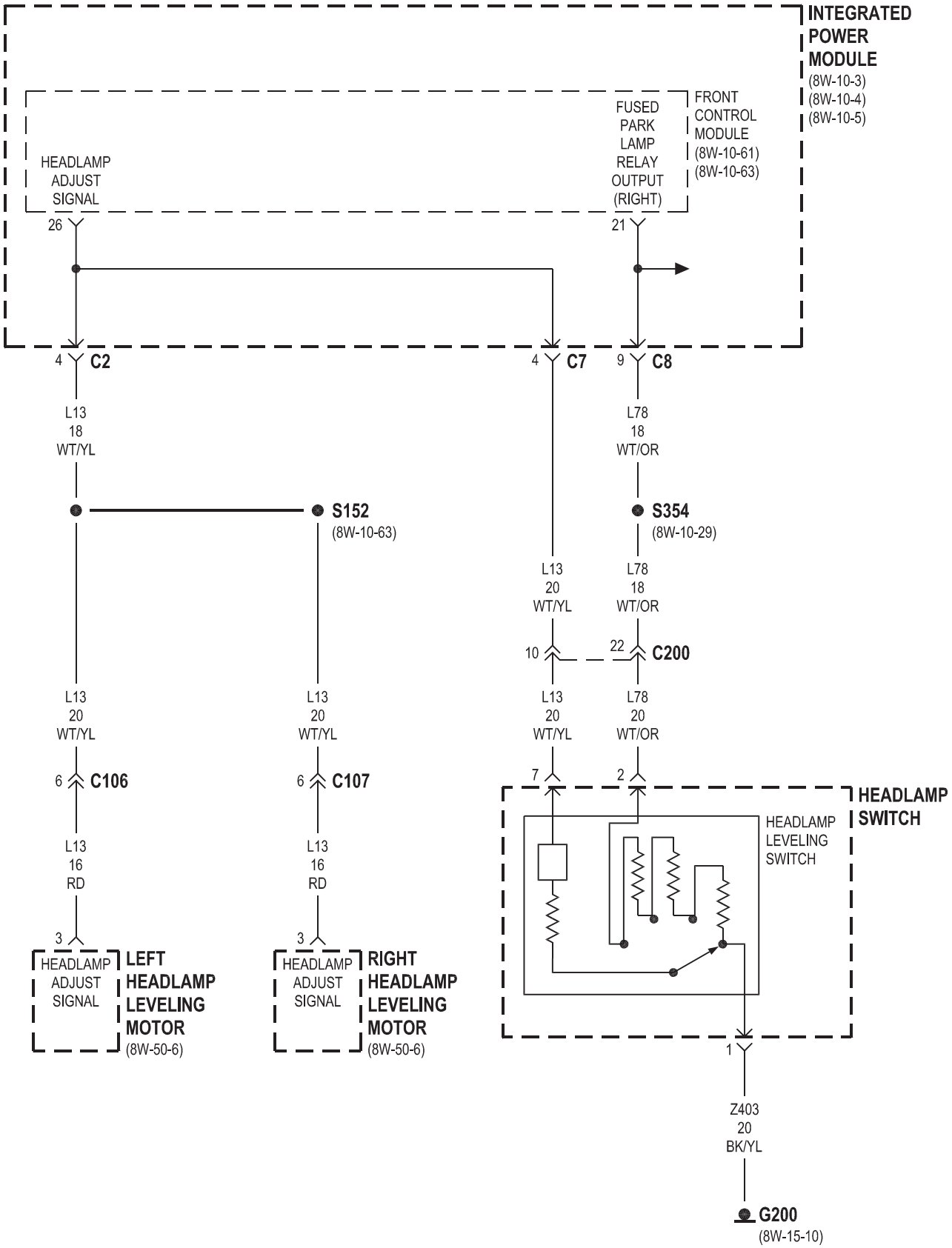
INTEGRATED POWER MODULE
(8W-10-3)
(8W-10-4)
(8W-10-5)
FRONT CONTROL MODULE
(8W-10-61)
(8W-10-63)
HEADLAMP ADJUST SIGNAL
FUSED PARK LAMP RELAY OUTPUT (RIGHT)
26
21
4 C2
4 C7
9 C8
L13 18 WT/YL
L78 18 WT/OR
S152
(8W-10-63)
S354
(8W-10-29)
L13 20 WT/YL
L78 18 WT/OR
10
22 C200
L13 20 WT/YL
L78 20 WT/OR
6 C106
6 C107
7
2
L13 16 RD
3
HEADLAMP ADJUST SIGNAL
LEFT HEADLAMP LEVELING MOTOR
(8W-50-6)
RIGHT HEADLAMP LEVELING MOTOR
(8W-50-6)
HEADLAMP SWITCH
HEADLAMP LEVELING SWITCH
1
Z403 20 BK/YL
G200
(8W-15-10)

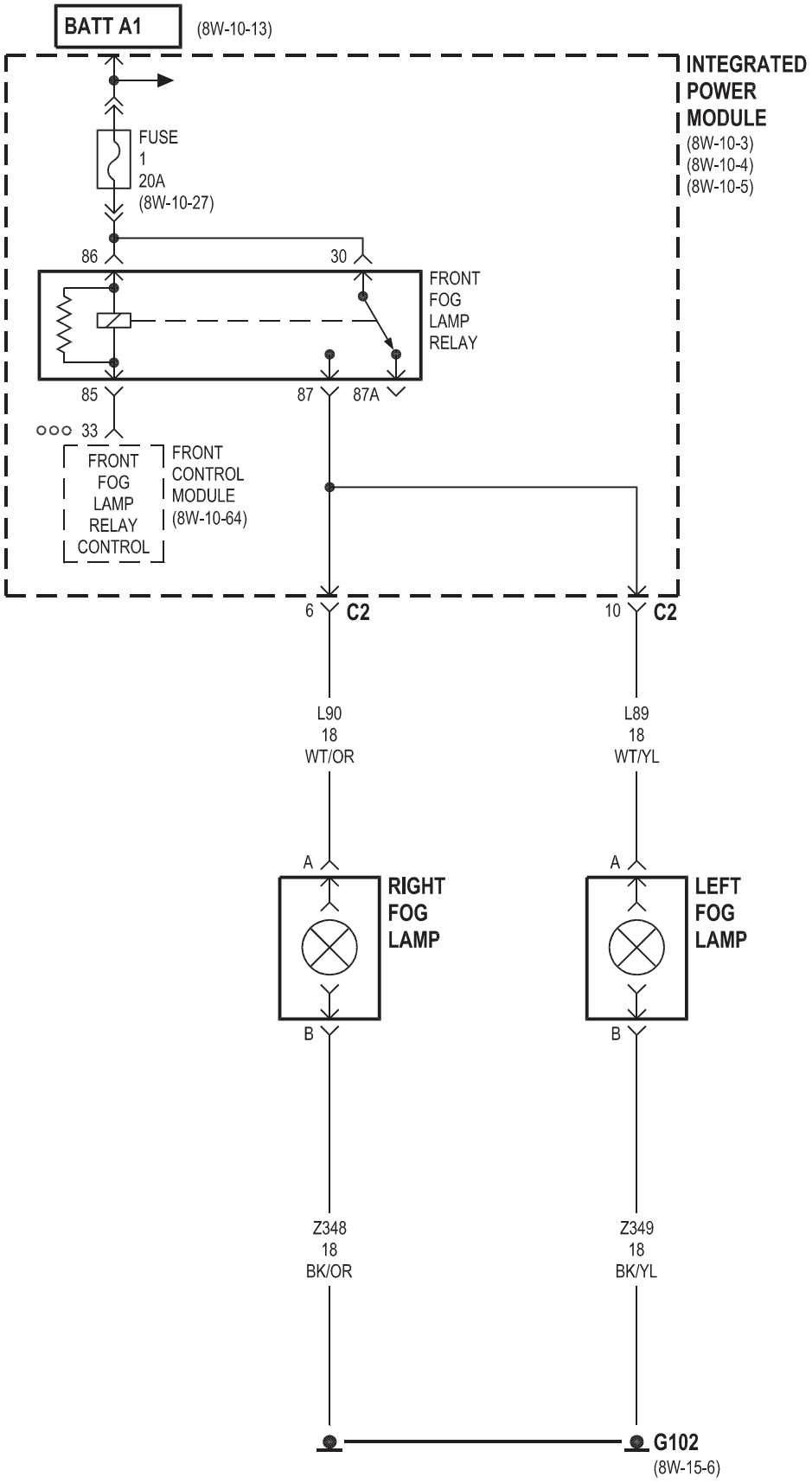
BATT A1
(8W-10-13)
INTEGRATED POWER MODULE
(8W-10-3)
(8W-10-4)
(8W-10-5)
FUSE 1 20A
(8W-10-27)
86
30
FRONT FOG LAMP RELAY
85
87
87A
33
FRONT FOG LAMP RELAY CONTROL
FRONT CONTROL MODULE
(8W-10-64)
6 C2
10 C2
L90 18 WT/OR
L89 18 WT/YL
A
RIGHT FOG LAMP
B
A
LEFT FOG LAMP
B
Z348 18 BK/OR
Z349 18 BK/YL
G102
(8W-15-6)
FOG LAMPS

8W-51 REAR LIGHTING

Component	Page
Back-Up Lamp Switch	8W-51-6
Battery	8W-51-6
Body Control Module	8W-51-2, 3, 4, 5, 6
Brake Lamp Switch	8W-51-2, 5
Center High Mounted Stop Lamp	8W-51-7
Front Control Module	8W-51-2, 5, 6
Fuse 2	8W-51-2, 5
Fuse 3	8W-51-2, 5, 6
Fuse 26	8W-51-2, 5
G101	8W-51-6
G302	8W-51-3, 4, 5, 6
G303	8W-51-7
Integrated Power Module	8W-51-2, 3, 5, 6
Left Rear Lamp Assembly	8W-51-2, 4, 5, 6
License Lamp	8W-51-7
Park Lamp Relay	8W-51-2, 5, 6
Right Rear Lamp Assembly	8W-51-2, 3, 5, 6
Trailer Tow Connector	8W-51-3, 4

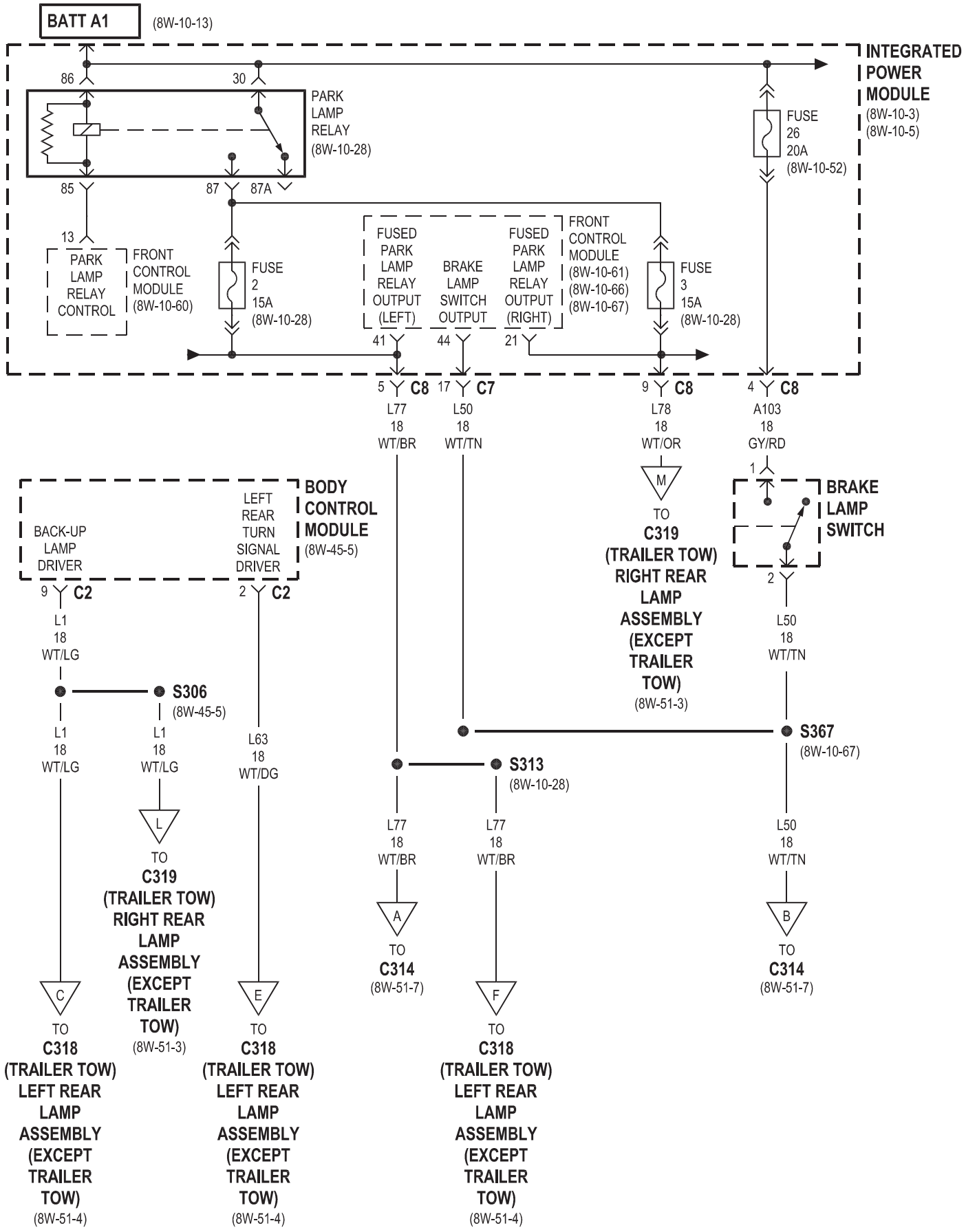
BATT A1
(8W-10-13)
INTEGRATED POWER MODULE
(8W-10-3)
(8W-10-5)
86
30
PARK LAMP RELAY
(8W-10-28)
85
87
87A
FUSE 26 20A
(8W-10-52)
13
PARK LAMP RELAY CONTROL
FRONT CONTROL MODULE
(8W-10-60)
FUSE 2 15A
(8W-10-28)
FUSED PARK LAMP RELAY OUTPUT (LEFT)
BRAKE LAMP SWITCH OUTPUT
FUSED PARK LAMP RELAY OUTPUT (RIGHT)
FRONT CONTROL MODULE
(8W-10-61)
(8W-10-66)
(8W-10-67)
FUSE 3 15A
(8W-10-28)
41
44
21
5 C8
L77 18 WT/BR
17 C7
L50 18 WT/TN
9 C8
L78 18 WT/OR
4 C8
A103 18 GY/RD
BODY CONTROL MODULE
(8W-45-5)
BACK-UP LAMP DRIVER
LEFT REAR TURN SIGNAL DRIVER
9 C2
2 C2
L1 18 WT/LG
S306
(8W-45-5)
L1 18 WT/LG
L1 18 WT/LG
L63 18 WT/DG
M
TO C319 (TRAILER TOW) RIGHT REAR LAMP ASSEMBLY (EXCEPT TRAILER TOW)
(8W-51-3)
1
BRAKE LAMP SWITCH
2
L50 18 WT/TN
S367
(8W-10-67)
S313
(8W-10-28)
L77 18 WT/BR
L77 18 WT/BR
L50 18 WT/TN
L
TO C319 (TRAILER TOW) RIGHT REAR LAMP ASSEMBLY (EXCEPT TRAILER TOW)
(8W-51-3)
A
TO C314
(8W-51-7)
B
TO C314
(8W-51-7)
C
TO C318 (TRAILER TOW) LEFT REAR LAMP ASSEMBLY (EXCEPT TRAILER TOW)
(8W-51-4)
E
TO C318 (TRAILER TOW) LEFT REAR LAMP ASSEMBLY (EXCEPT TRAILER TOW)
(8W-51-4)
F
TO C318 (TRAILER TOW) LEFT REAR LAMP ASSEMBLY (EXCEPT TRAILER TOW)
(8W-51-4)

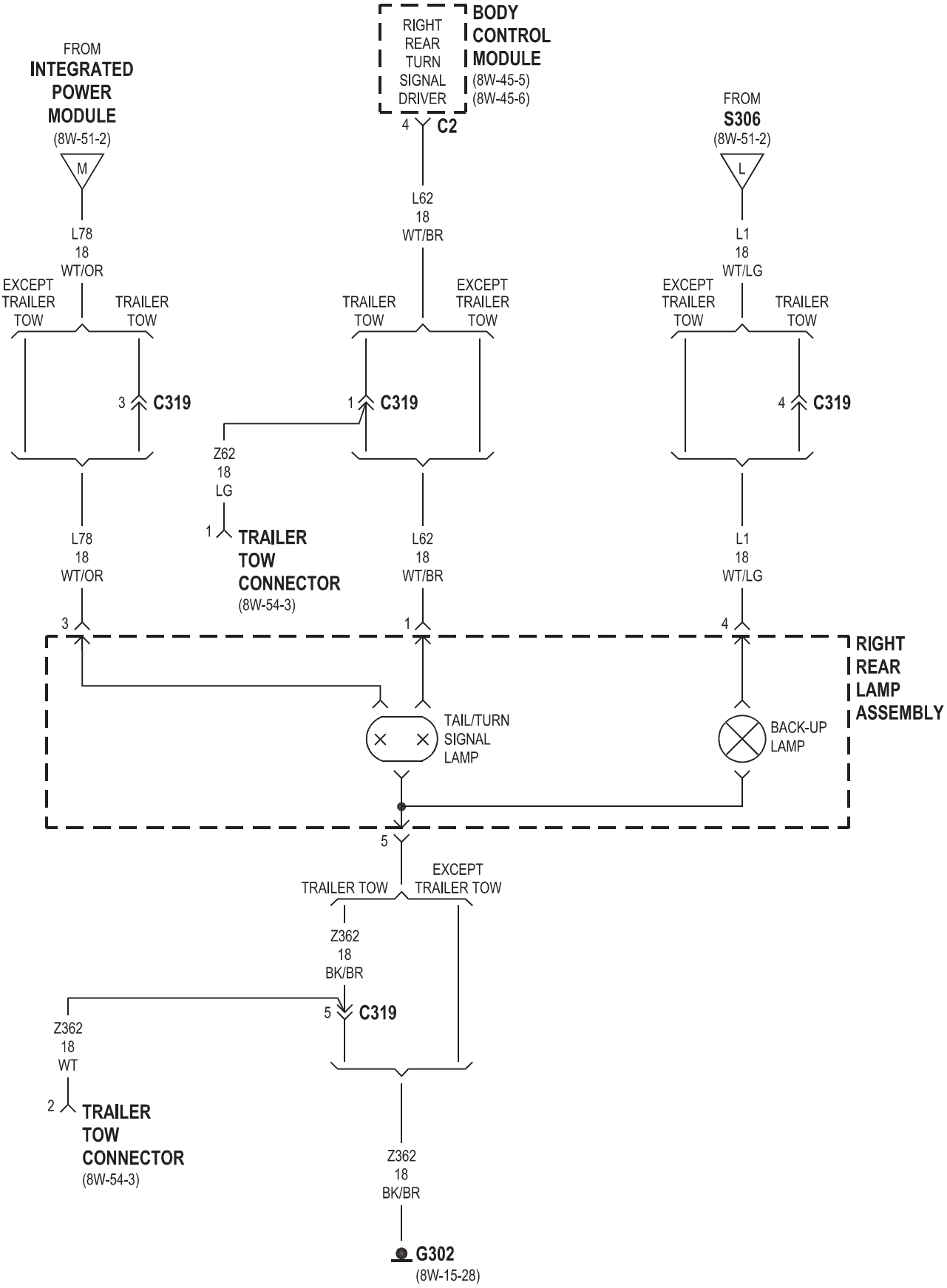
FROM
INTEGRATED
POWER
MODULE
(8W-51-2)
M
L78
18
WT/OR
EXCEPT
TRAILER
TOW
TRAILER
TOW
3
C319
L78
18
WT/OR
3
RIGHT
REAR
TURN
SIGNAL
DRIVER
BODY
CONTROL
MODULE
(8W-45-5)
(8W-45-6)
4
C2
L62
18
WT/BR
TRAILER
TOW
EXCEPT
TRAILER
TOW
1
C319
Z62
18
LG
1
TRAILER
TOW
CONNECTOR
(8W-54-3)
L62
18
WT/BR
1
FROM
S306
(8W-51-2)
L
L1
18
WT/LG
EXCEPT
TRAILER
TOW
TRAILER
TOW
4
C319
L1
18
WT/LG
4
RIGHT
REAR
LAMP
ASSEMBLY
TAIL/TURN
SIGNAL
LAMP
BACK-UP
LAMP
5
TRAILER TOW
EXCEPT
TRAILER TOW
Z362
18
BK/BR
5
C319
Z362
18
WT
2
TRAILER
TOW
CONNECTOR
(8W-54-3)
Z362
18
BK/BR
G302
(8W-15-28)

EXCEPT EXPORT

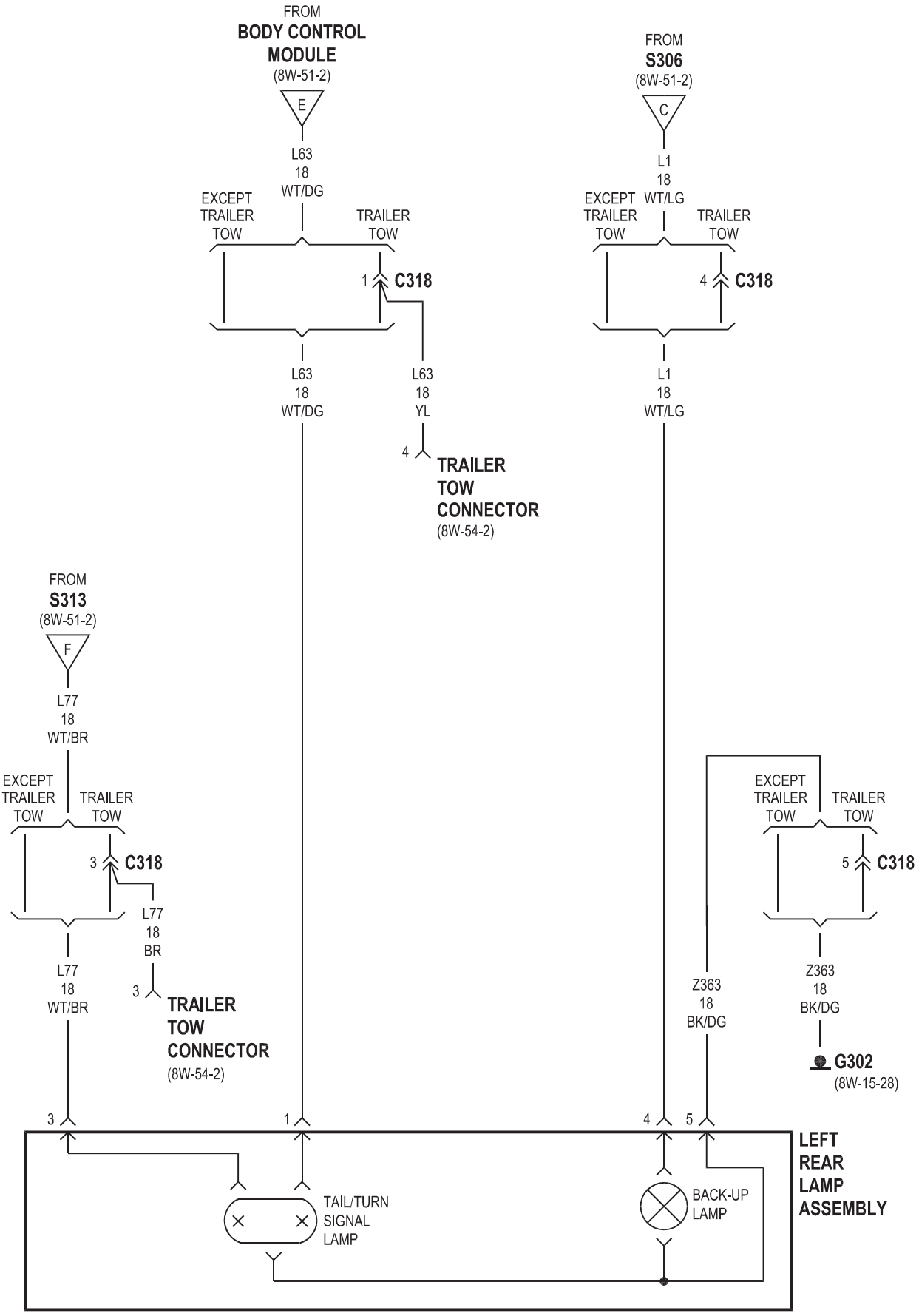

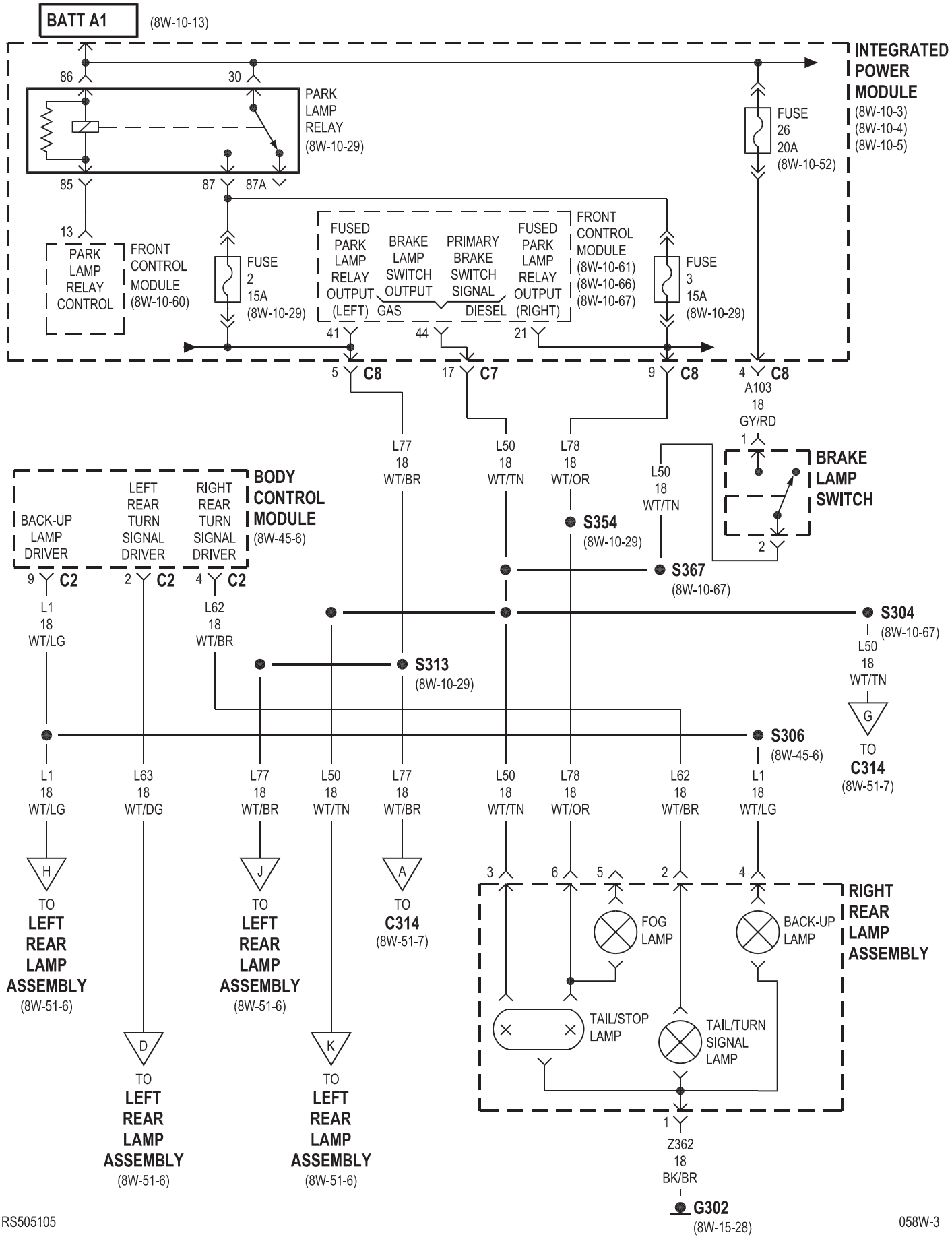
BATT A1
(8W-10-13)
INTEGRATED POWER MODULE
(8W-10-3)
(8W-10-4)
(8W-10-5)
86
30
PARK LAMP RELAY
(8W-10-29)
85
87
87A
13
PARK LAMP RELAY CONTROL
FRONT CONTROL MODULE
(8W-10-60)
FUSE 2 15A
(8W-10-29)
FUSED PARK LAMP RELAY OUTPUT (LEFT)
BRAKE LAMP SWITCH OUTPUT
GAS
PRIMARY BRAKE SWITCH SIGNAL
DIESEL
FUSED PARK LAMP RELAY OUTPUT (RIGHT)
FRONT CONTROL MODULE
(8W-10-61)
(8W-10-66)
(8W-10-67)
FUSE 26 20A
(8W-10-52)
FUSE 3 15A
(8W-10-29)
41
44
21
5 C8
17 C7
9 C8
4 C8
A103
18
GY/RD
1
L77
18
WT/BR
L50
18
WT/TN
L78
18
WT/OR
L50
18
WT/TN
BRAKE LAMP SWITCH
2
S354
(8W-10-29)
S367
(8W-10-67)
BODY CONTROL MODULE
(8W-45-6)
BACK-UP LAMP DRIVER
LEFT REAR TURN SIGNAL DRIVER
RIGHT REAR TURN SIGNAL DRIVER
9 C2
2 C2
4 C2
L1
18
WT/LG
L62
18
WT/BR
S304
(8W-10-67)
L50
18
WT/TN
G
TO
C314
(8W-51-7)
S313
(8W-10-29)
S306
(8W-45-6)
L1
18
WT/LG
L63
18
WT/DG
L77
18
WT/BR
L50
18
WT/TN
L77
18
WT/BR
L50
18
WT/TN
L78
18
WT/OR
L62
18
WT/BR
L1
18
WT/LG
H
TO
LEFT REAR LAMP ASSEMBLY
(8W-51-6)
D
TO
LEFT REAR LAMP ASSEMBLY
(8W-51-6)
J
TO
LEFT REAR LAMP ASSEMBLY
(8W-51-6)
K
TO
LEFT REAR LAMP ASSEMBLY
(8W-51-6)
A
TO
C314
(8W-51-7)
3
6
5
2
4
FOG LAMP
BACK-UP LAMP
TAIL/STOP LAMP
TAIL/TURN SIGNAL LAMP
RIGHT REAR LAMP ASSEMBLY
1
Z362
18
BK/BR
G302
(8W-15-28)

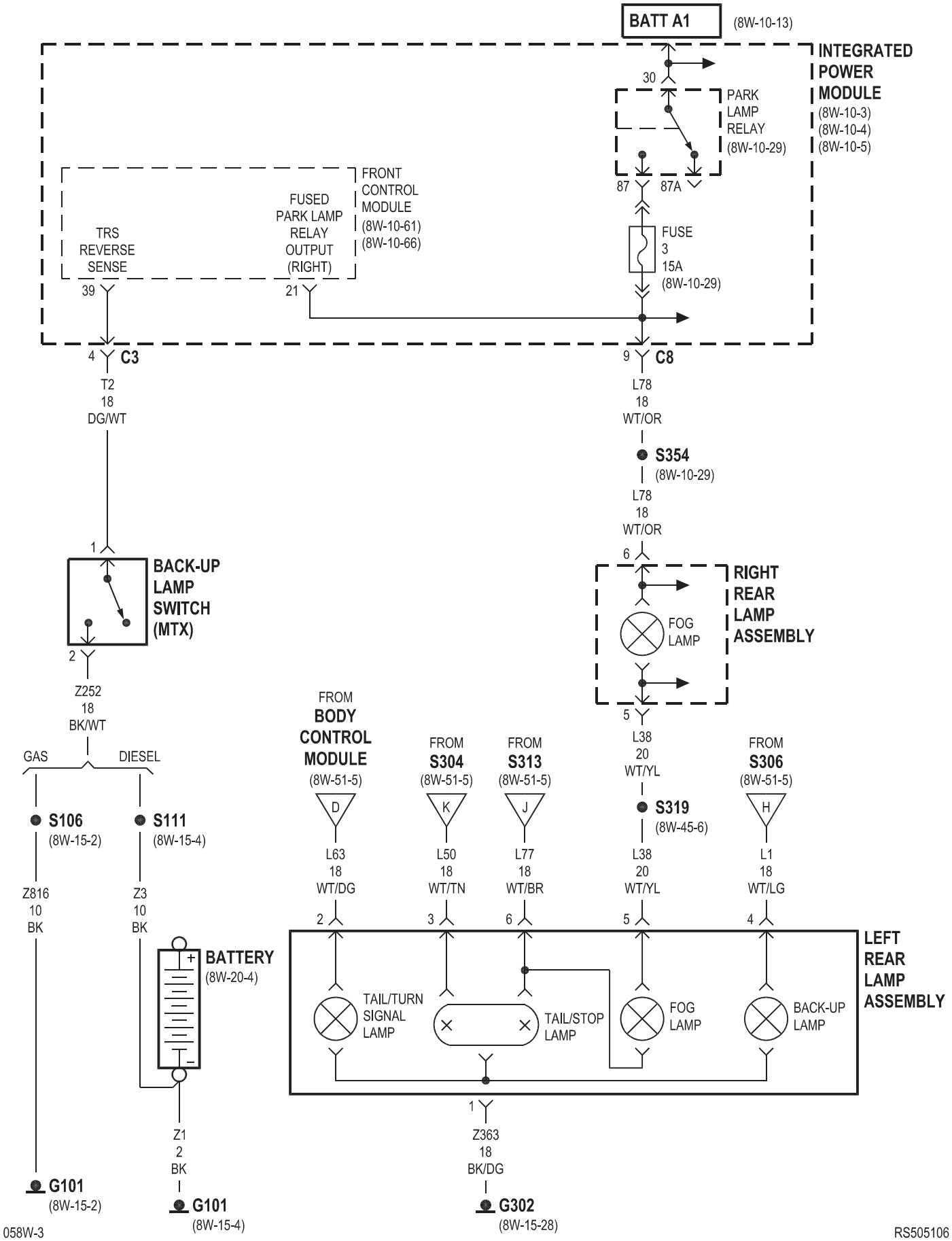
BATT A1
(8W-10-13)
INTEGRATED POWER MODULE
(8W-10-3)
(8W-10-4)
(8W-10-5)
30
PARK LAMP RELAY
(8W-10-29)
87
87A
FUSE 3 15A
(8W-10-29)
FRONT CONTROL MODULE
(8W-10-61)
(8W-10-66)
TRS REVERSE SENSE
39
FUSED PARK LAMP RELAY OUTPUT (RIGHT)
21
4
C3
T2
18
DG/WT
9
C8
L78
18
WT/OR
S354
(8W-10-29)
L78
18
WT/OR
6
1
BACK-UP LAMP SWITCH (MTX)
2
Z252
18
BK/WT
RIGHT REAR LAMP ASSEMBLY
FOG LAMP
5
L38
20
WT/YL
S319
(8W-45-6)
GAS
DIESEL
S106
(8W-15-2)
S111
(8W-15-4)
Z816
10
BK
Z3
10
BK
FROM BODY CONTROL MODULE
(8W-51-5)
FROM S304
(8W-51-5)
FROM S313
(8W-51-5)
FROM S306
(8W-51-5)
D
K
J
H
L63
18
WT/DG
L50
18
WT/TN
L77
18
WT/BR
L38
20
WT/YL
L1
18
WT/LG
2
3
6
5
4
BATTERY
(8W-20-4)
LEFT REAR LAMP ASSEMBLY
TAIL/TURN SIGNAL LAMP
TAIL/STOP LAMP
FOG LAMP
BACK-UP LAMP
1
Z1
2
BK
Z363
18
BK/DG
G101
(8W-15-2)
G101
(8W-15-4)
G302
(8W-15-28)

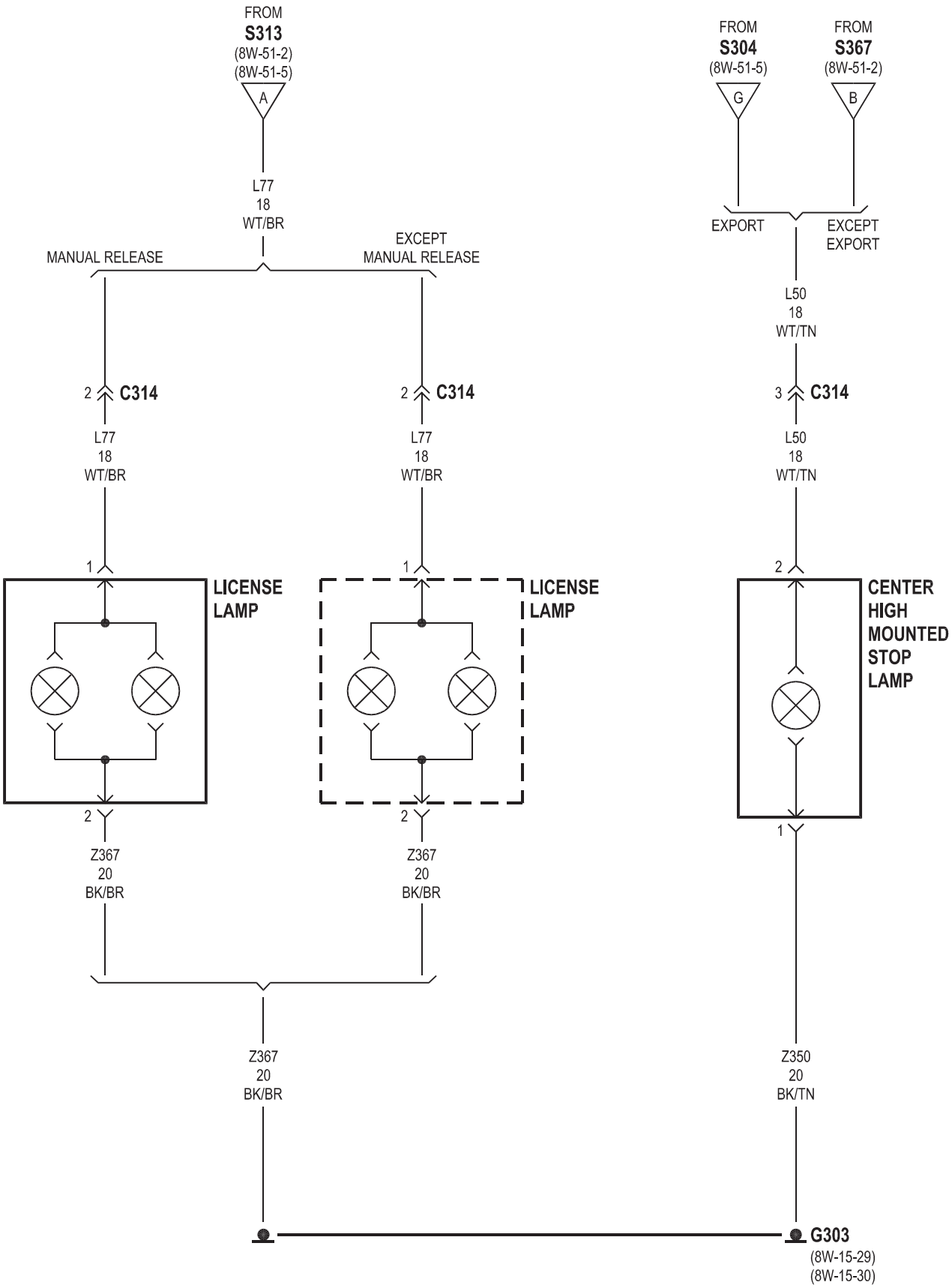
FROM
S313
(8W-51-2)
(8W-51-5)
A
L77
18
WT/BR
MANUAL RELEASE
EXCEPT
MANUAL RELEASE
FROM
S304
(8W-51-5)
G
FROM
S367
(8W-51-2)
B
EXPORT
EXCEPT
EXPORT
L50
18
WT/TN
2 C314
2 C314
3 C314
L77
18
WT/BR
L77
18
WT/BR
L50
18
WT/TN
1
1
2
LICENSE
LAMP
LICENSE
LAMP
CENTER
HIGH
MOUNTED
STOP
LAMP
2
2
1
Z367
20
BK/BR
Z367
20
BK/BR
Z367
20
BK/BR
Z350
20
BK/TN
G303
(8W-15-29)
(8W-15-30)

8W-52 TURN SIGNALS

Component	Page
Body Control Module	8W-52-2, 3, 4, 5
Fuse 24	8W-52-5
G102	8W-52-2
G200	8W-52-2, 3
G302	8W-52-4
Instrument Cluster	8W-52-5
Instrument Panel Switch Bank	8W-52-2, 3
Integrated Power Module	8W-52-2, 3, 5
Left Front Park/Turn Signal Lamp	8W-52-2
Left Rear Lamp Assembly	8W-52-4
Left Repeater Lamp	8W-52-5
Left Turn Signal Lamp	8W-52-3
Multi-Function Switch	8W-52-2, 3
Right Front Park/Turn Signal Lamp	8W-52-2
Right Rear Lamp Assembly	8W-52-4
Right Repeater Lamp	8W-52-5
Right Turn Signal Lamp	8W-52-3
Trailer Tow Connector	8W-52-4

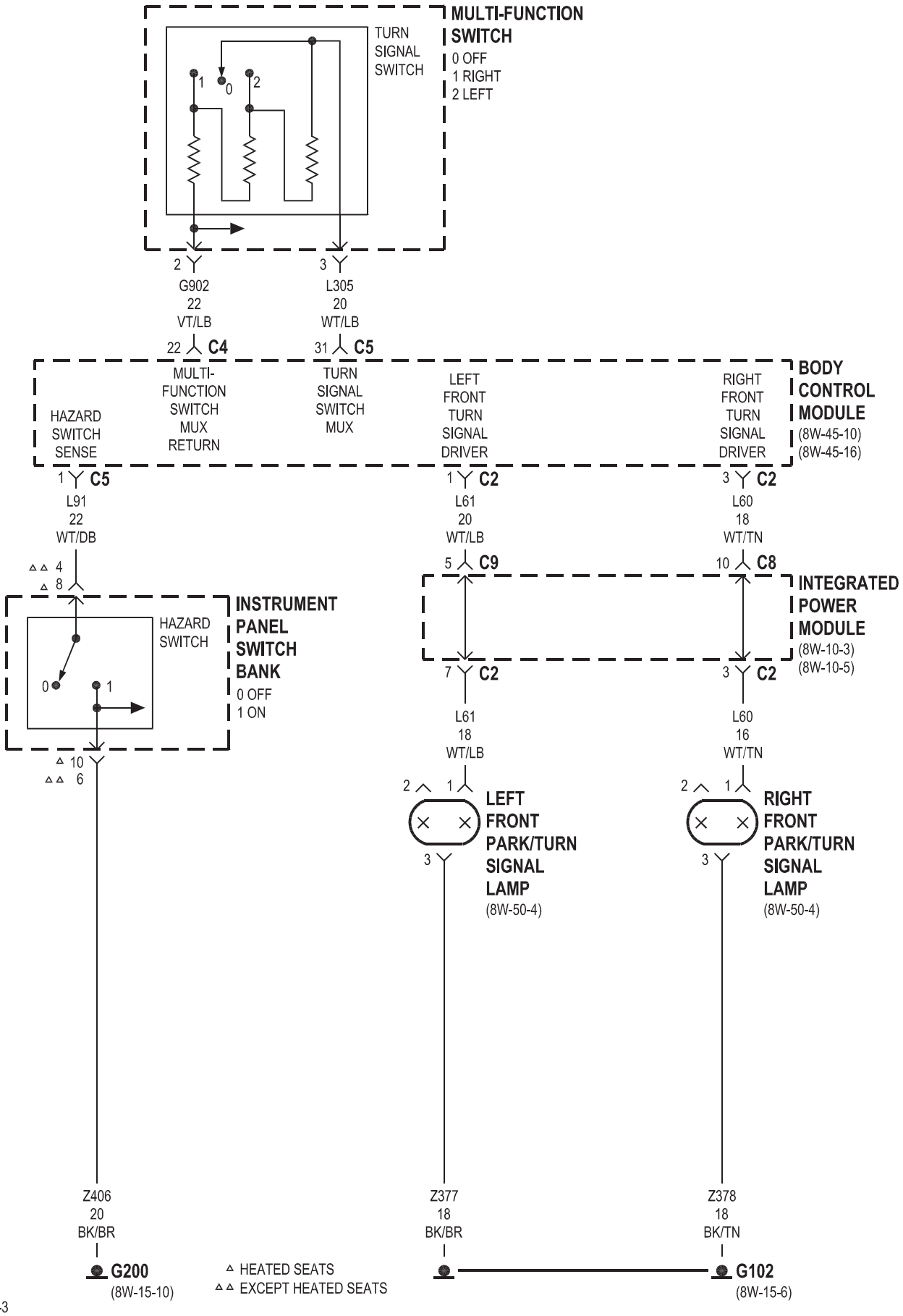
MULTI-FUNCTION SWITCH
0 OFF
1 RIGHT
2 LEFT
TURN SIGNAL SWITCH
1
0
2
2
G902
22
VT/LB
3
L305
20
WT/LB
22 C4
31 C5
BODY CONTROL MODULE
(8W-45-10)
(8W-45-16)
HAZARD SWITCH SENSE
MULTI-FUNCTION SWITCH MUX RETURN
TURN SIGNAL SWITCH MUX
LEFT FRONT TURN SIGNAL DRIVER
RIGHT FRONT TURN SIGNAL DRIVER
1 C5
L91
22
WT/DB
1 C2
L61
20
WT/LB
3 C2
L60
18
WT/TN
△△ 4
△ 8
5 C9
10 C8
INTEGRATED POWER MODULE
(8W-10-3)
(8W-10-5)
INSTRUMENT PANEL SWITCH BANK
0 OFF
1 ON
HAZARD SWITCH
0
1
7 C2
3 C2
L61
18
WT/LB
L60
16
WT/TN
△ 10
△△ 6
2
1
LEFT FRONT PARK/TURN SIGNAL LAMP
(8W-50-4)
RIGHT FRONT PARK/TURN SIGNAL LAMP
(8W-50-4)
3
Z406
20
BK/BR
Z377
18
BK/BR
Z378
18
BK/TN
G200
(8W-15-10)
G102
(8W-15-6)
△ HEATED SEATS
△△ EXCEPT HEATED SEATS

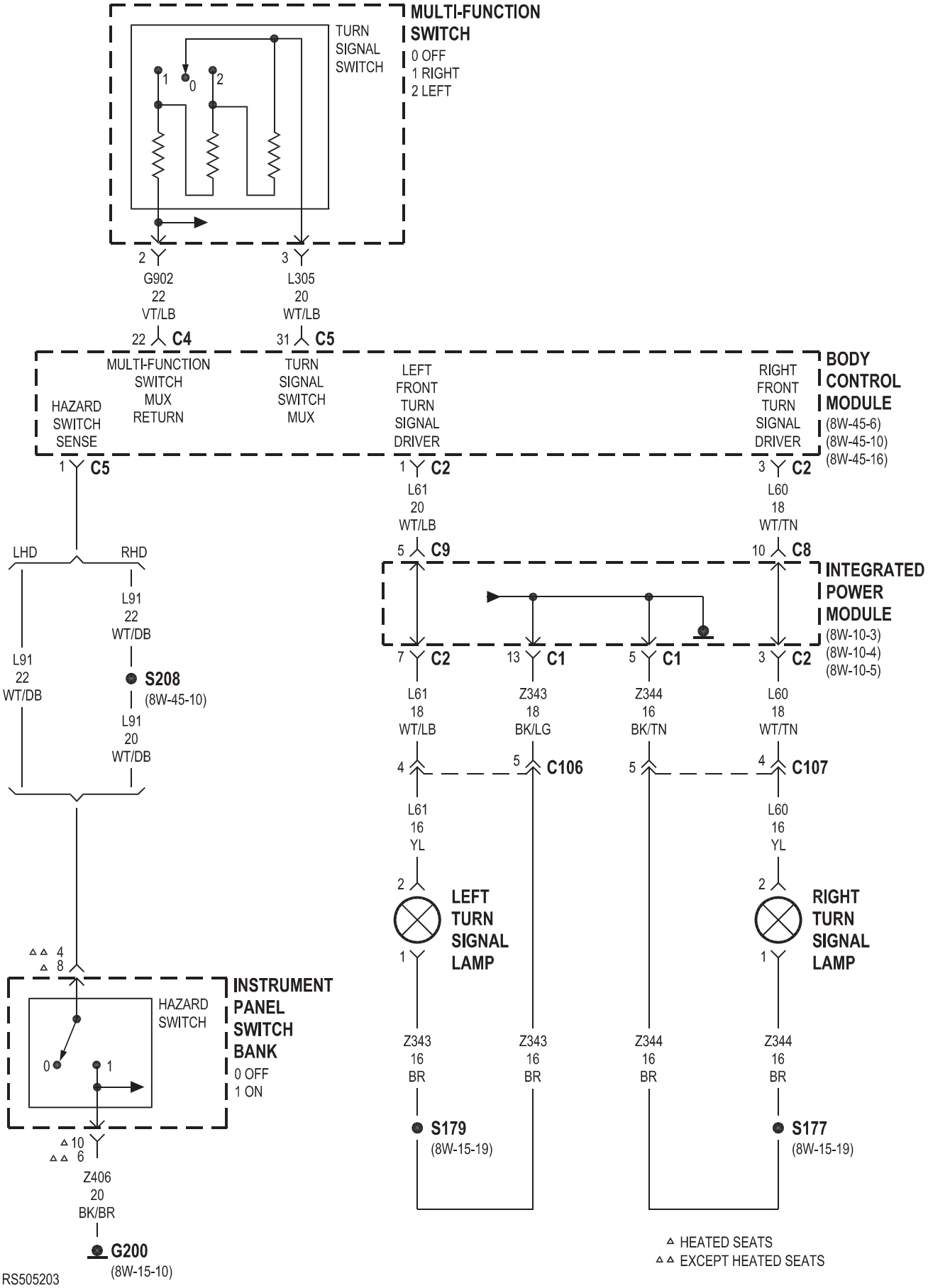
MULTI-FUNCTION SWITCH
0 OFF
1 RIGHT
2 LEFT
TURN SIGNAL SWITCH
2 G902 22 VT/LB 22 C4
3 L305 20 WT/LB 31 C5
BODY CONTROL MODULE
(8W-45-6)
(8W-45-10)
(8W-45-16)
HAZARD SWITCH SENSE
MULTI-FUNCTION SWITCH MUX RETURN
TURN SIGNAL SWITCH MUX
LEFT FRONT TURN SIGNAL DRIVER
RIGHT FRONT TURN SIGNAL DRIVER
1 C5
1 C2 L61 20 WT/LB
3 C2 L60 18 WT/TN
5 C9
10 C8
INTEGRATED POWER MODULE
(8W-10-3)
(8W-10-4)
(8W-10-5)
LHD
RHD
L91 22 WT/DB
L91 22 WT/DB
S208
(8W-45-10)
L91 20 WT/DB
7 C2
13 C1
5 C1
3 C2
L61 18 WT/LB
Z343 18 BK/LG
Z344 16 BK/TN
L60 18 WT/TN
4
5 C106
5
4 C107
L61 16 YL
L60 16 YL
2
LEFT TURN SIGNAL LAMP
1
2
RIGHT TURN SIGNAL LAMP
1
Z343 16 BR
Z343 16 BR
Z344 16 BR
Z344 16 BR
S179
(8W-15-19)
S177
(8W-15-19)
△△ 4
△ 8
INSTRUMENT PANEL SWITCH BANK
0 OFF
1 ON
HAZARD SWITCH
0
1
△ 10
△△ 6
Z406 20 BK/BR
G200
(8W-15-10)
△ HEATED SEATS
△△ EXCEPT HEATED SEATS

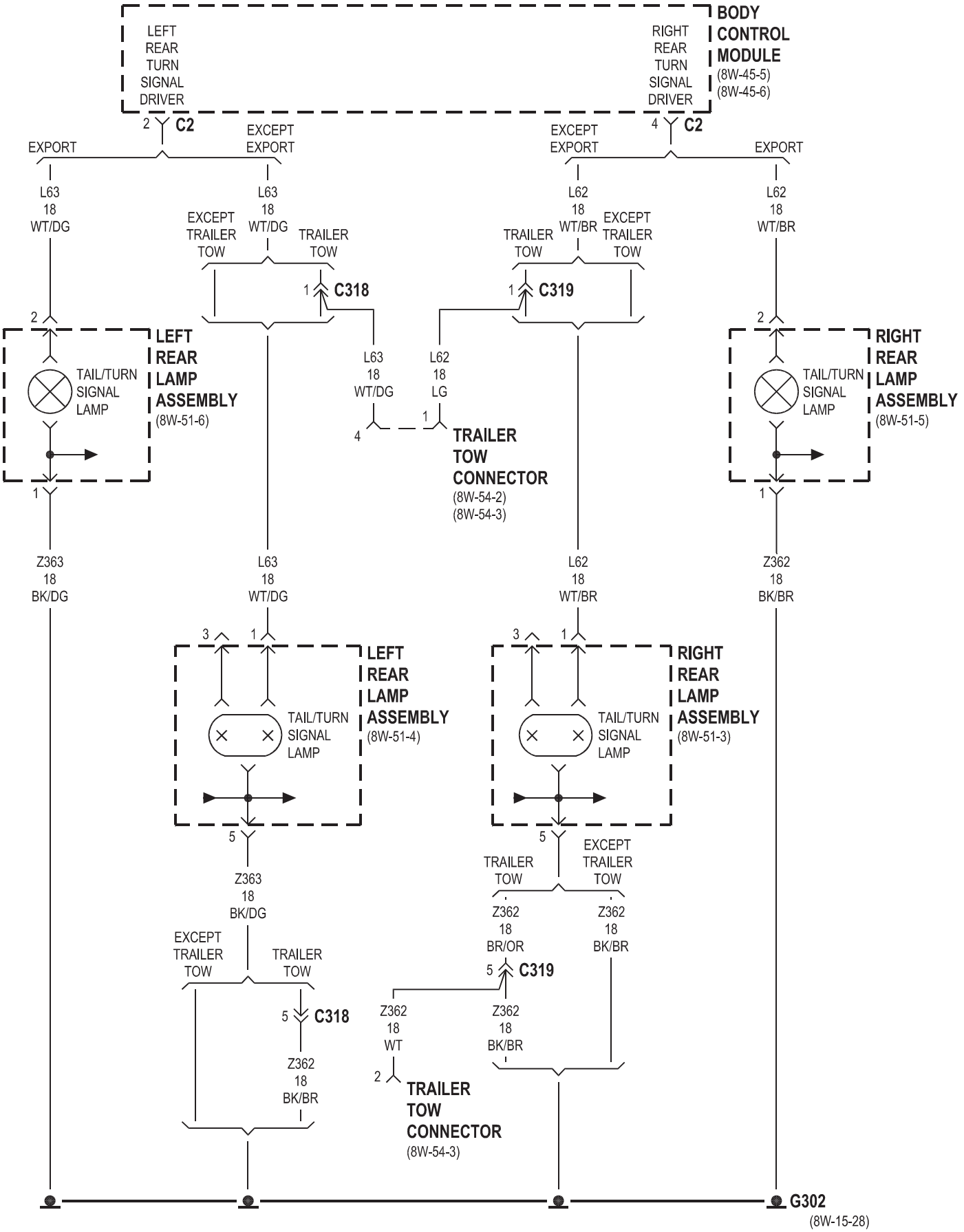
BODY CONTROL MODULE
(8W-45-5)
(8W-45-6)
LEFT REAR TURN SIGNAL DRIVER
RIGHT REAR TURN SIGNAL DRIVER
C2
EXPORT
EXCEPT EXPORT
L63 18 WT/DG
L62 18 WT/BR
EXCEPT TRAILER TOW
TRAILER TOW
C318
C319
LEFT REAR LAMP ASSEMBLY
(8W-51-6)
RIGHT REAR LAMP ASSEMBLY
(8W-51-5)
TAIL/TURN SIGNAL LAMP
L63 18 WT/DG
L62 18 LG
TRAILER TOW CONNECTOR
(8W-54-2)
(8W-54-3)
Z363 18 BK/DG
Z362 18 BK/BR
LEFT REAR LAMP ASSEMBLY
(8W-51-4)
RIGHT REAR LAMP ASSEMBLY
(8W-51-3)
Z362 18 BR/OR
Z362 18 WT
TRAILER TOW CONNECTOR
(8W-54-3)
G302
(8W-15-28)

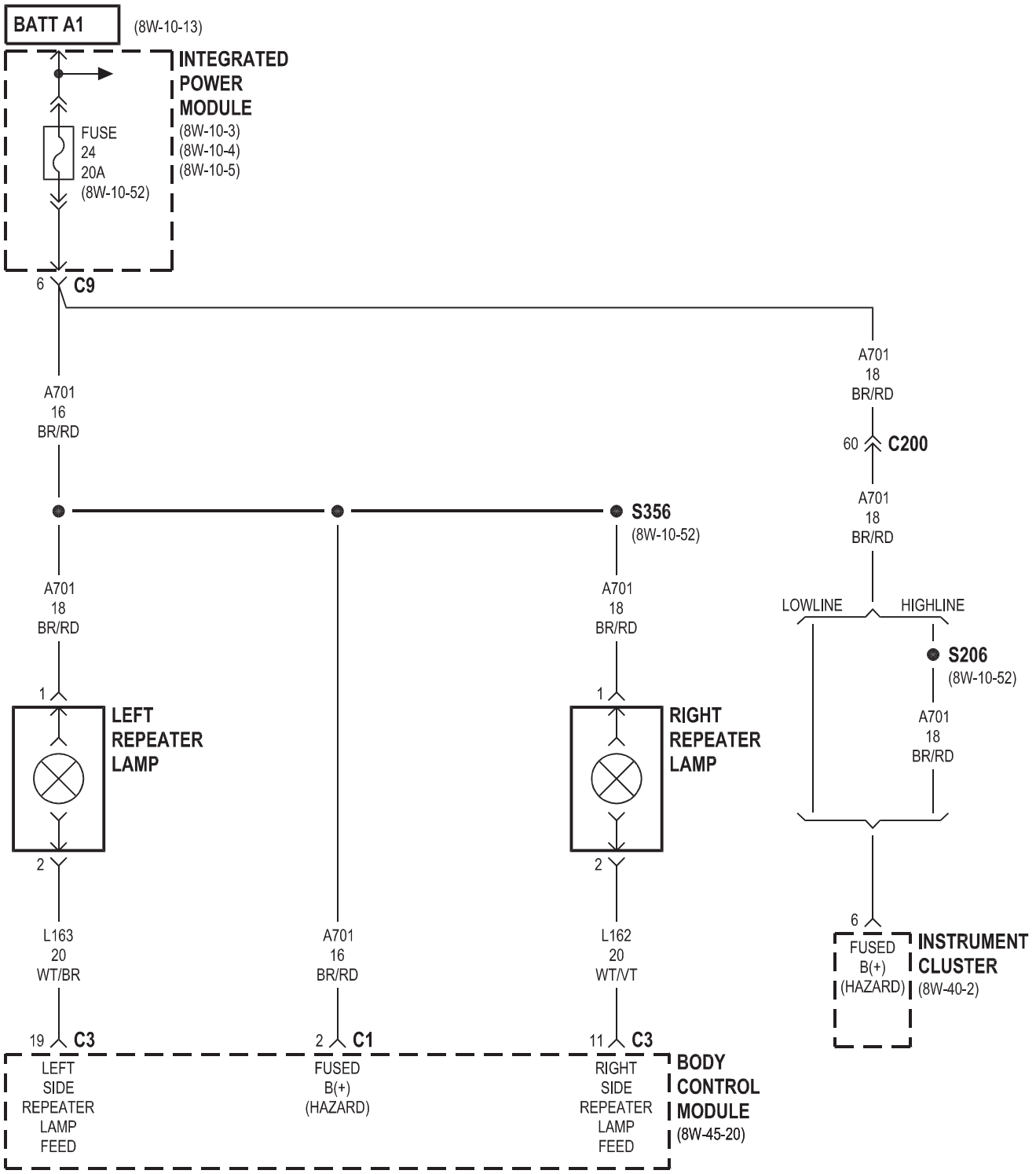
BATT A1
(8W-10-13)
INTEGRATED POWER MODULE
(8W-10-3)
(8W-10-4)
(8W-10-5)
FUSE 24 20A (8W-10-52)
6 C9
A701 16 BR/RD
A701 18 BR/RD
60 C200
S356
(8W-10-52)
LOWLINE
HIGHLINE
S206
(8W-10-52)
1
LEFT REPEATER LAMP
2
L163 20 WT/BR
19 C3
LEFT SIDE REPEATER LAMP FEED
RIGHT REPEATER LAMP
L162 20 WT/VT
11 C3
RIGHT SIDE REPEATER LAMP FEED
2 C1
FUSED B(+) (HAZARD)
6
FUSED B(+) (HAZARD)
INSTRUMENT CLUSTER
(8W-40-2)
BODY CONTROL MODULE
(8W-45-20)

8W-53 WIPERS

Component	Page
A/C-Heater Control	8W-53-7
Accessory Relay	8W-53-3
Body Control Module	8W-53-3, 5, 6, 7
Front Control Module	8W-53-2, 3, 4, 5
Front Wiper High/Low Relay	8W-53-2
Front Wiper On/Off Relay	8W-53-2
Fuse 4	8W-53-2
Fuse 11	8W-53-3
Fuse 30	8W-53-4
G102	8W-53-4
G200	8W-53-7
G300	8W-53-2
G301	8W-53-5
G303	8W-53-3
Headlamp Washer Pump Motor	8W-53-4
Headlamp Washer Relay	8W-53-4
Instrument Panel Switch Bank	8W-53-6
Integrated Power Module	8W-53-2, 3, 4, 5
Multi-Function Switch	8W-53-5
Rear Wiper Motor	8W-53-3
Washer Fluid Level Switch	8W-53-4
Washer Pump Motor	8W-53-3
Wiper Module	8W-53-2

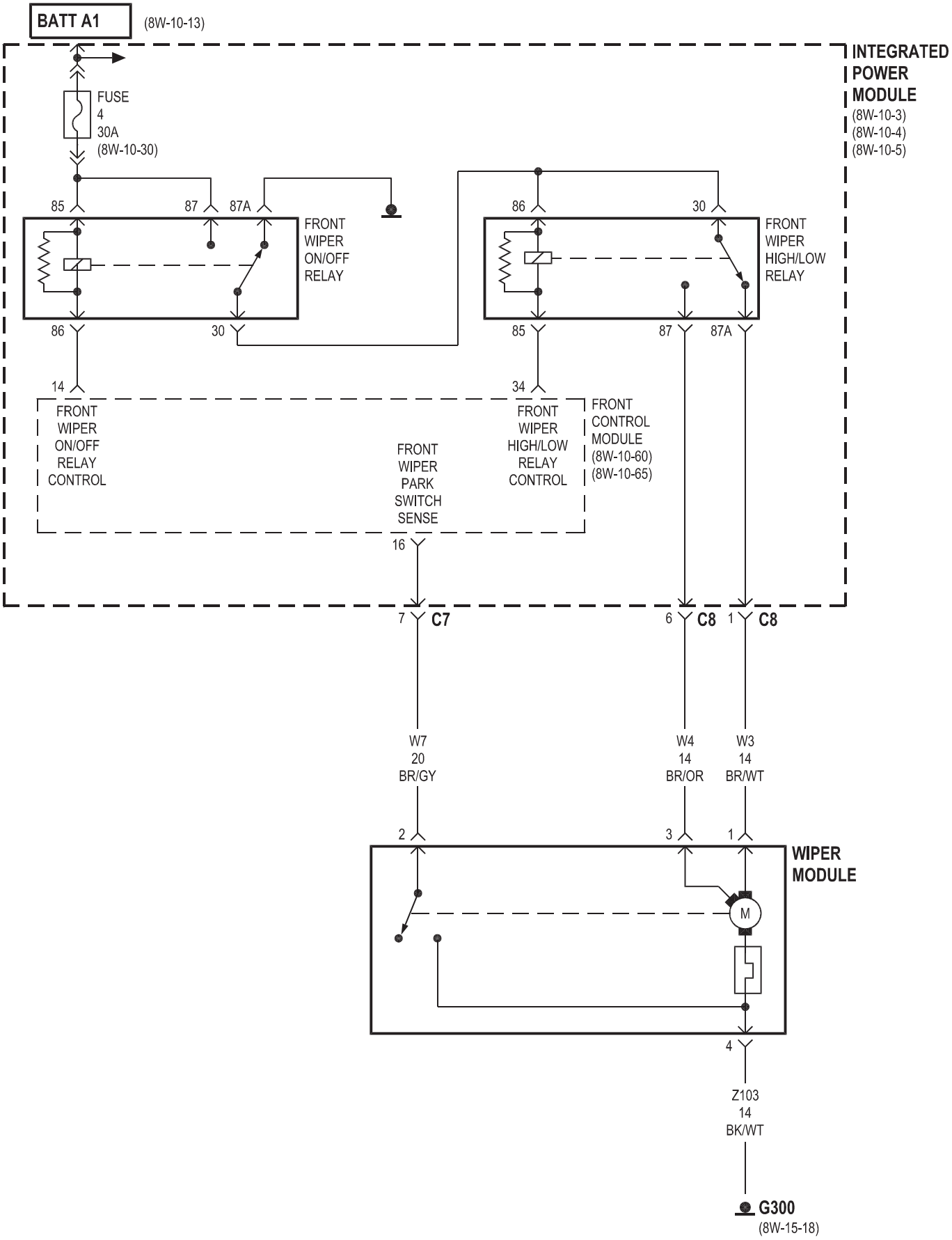
BATT A1
(8W-10-13)
INTEGRATED POWER MODULE
(8W-10-3)
(8W-10-4)
(8W-10-5)
FUSE 4 30A
(8W-10-30)
85
87
87A
86
30
FRONT WIPER ON/OFF RELAY
FRONT WIPER HIGH/LOW RELAY
86
30
85
87
87A
14
34
FRONT WIPER ON/OFF RELAY CONTROL
FRONT WIPER PARK SWITCH SENSE
FRONT WIPER HIGH/LOW RELAY CONTROL
FRONT CONTROL MODULE
(8W-10-60)
(8W-10-65)
16
7 C7
6 C8
1 C8
W7 20 BR/GY
W4 14 BR/OR
W3 14 BR/WT
2
3
1
WIPER MODULE
M
4
Z103 14 BK/WT
G300
(8W-15-18)

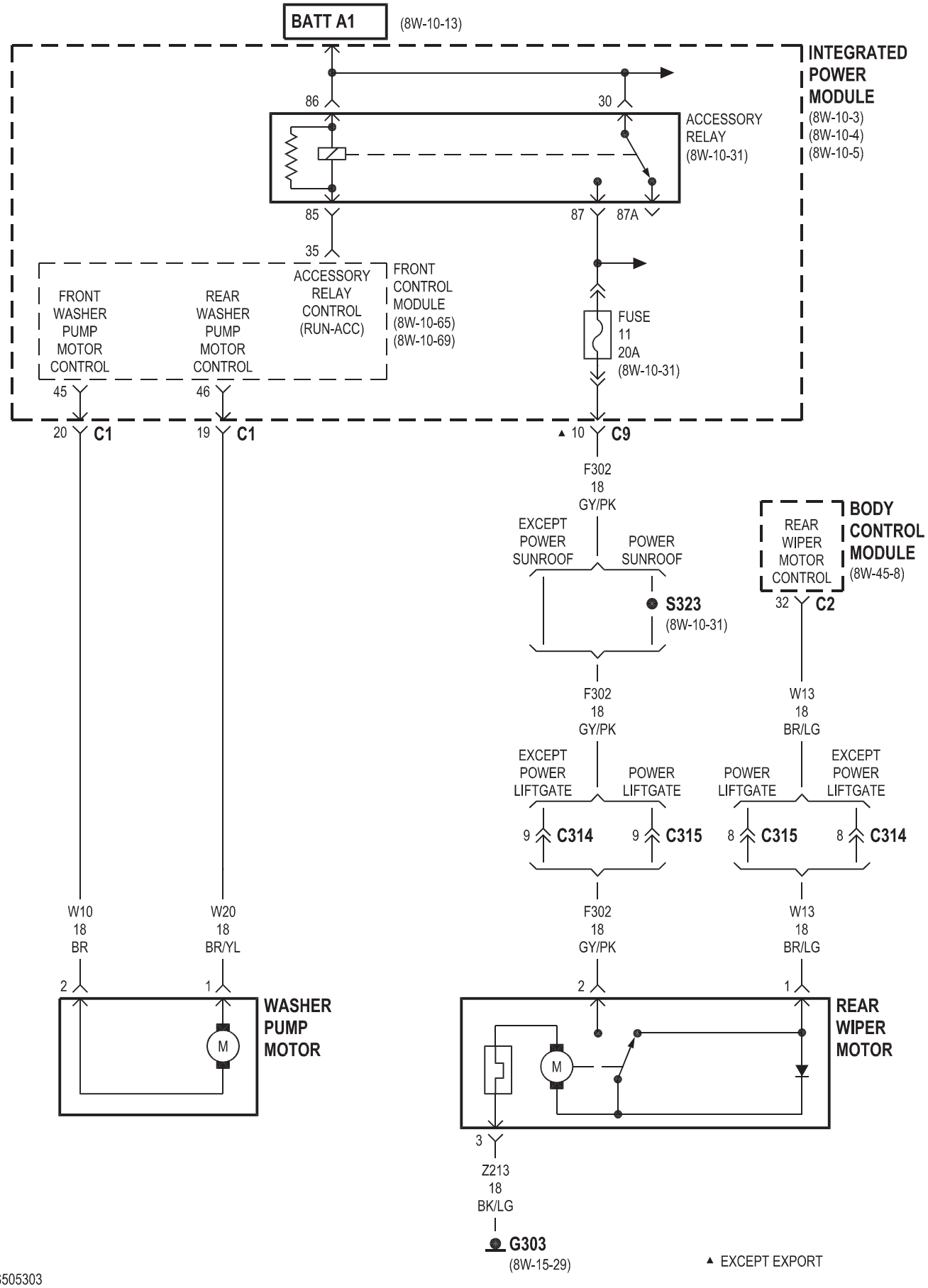
BATT A1
(8W-10-13)
INTEGRATED POWER MODULE
(8W-10-3)
(8W-10-4)
(8W-10-5)
86
30
ACCESSORY RELAY
(8W-10-31)
85
87
87A
35
FRONT WASHER PUMP MOTOR CONTROL
REAR WASHER PUMP MOTOR CONTROL
ACCESSORY RELAY CONTROL (RUN-ACC)
FRONT CONTROL MODULE
(8W-10-65)
(8W-10-69)
FUSE
11
20A
(8W-10-31)
45
46
20 C1
19 C1
▲ 10 C9
F302
18
GY/PK
EXCEPT POWER SUNROOF
POWER SUNROOF
S323
(8W-10-31)
REAR WIPER MOTOR CONTROL
BODY CONTROL MODULE
(8W-45-8)
32 C2
F302
18
GY/PK
W13
18
BR/LG
EXCEPT POWER LIFTGATE
POWER LIFTGATE
POWER LIFTGATE
EXCEPT POWER LIFTGATE
9 C314
9 C315
8 C315
8 C314
W10
18
BR
W20
18
BR/YL
F302
18
GY/PK
W13
18
BR/LG
2
1
2
1
WASHER PUMP MOTOR
M
M
REAR WIPER MOTOR
3
Z213
18
BK/LG
G303
(8W-15-29)
▲ EXCEPT EXPORT

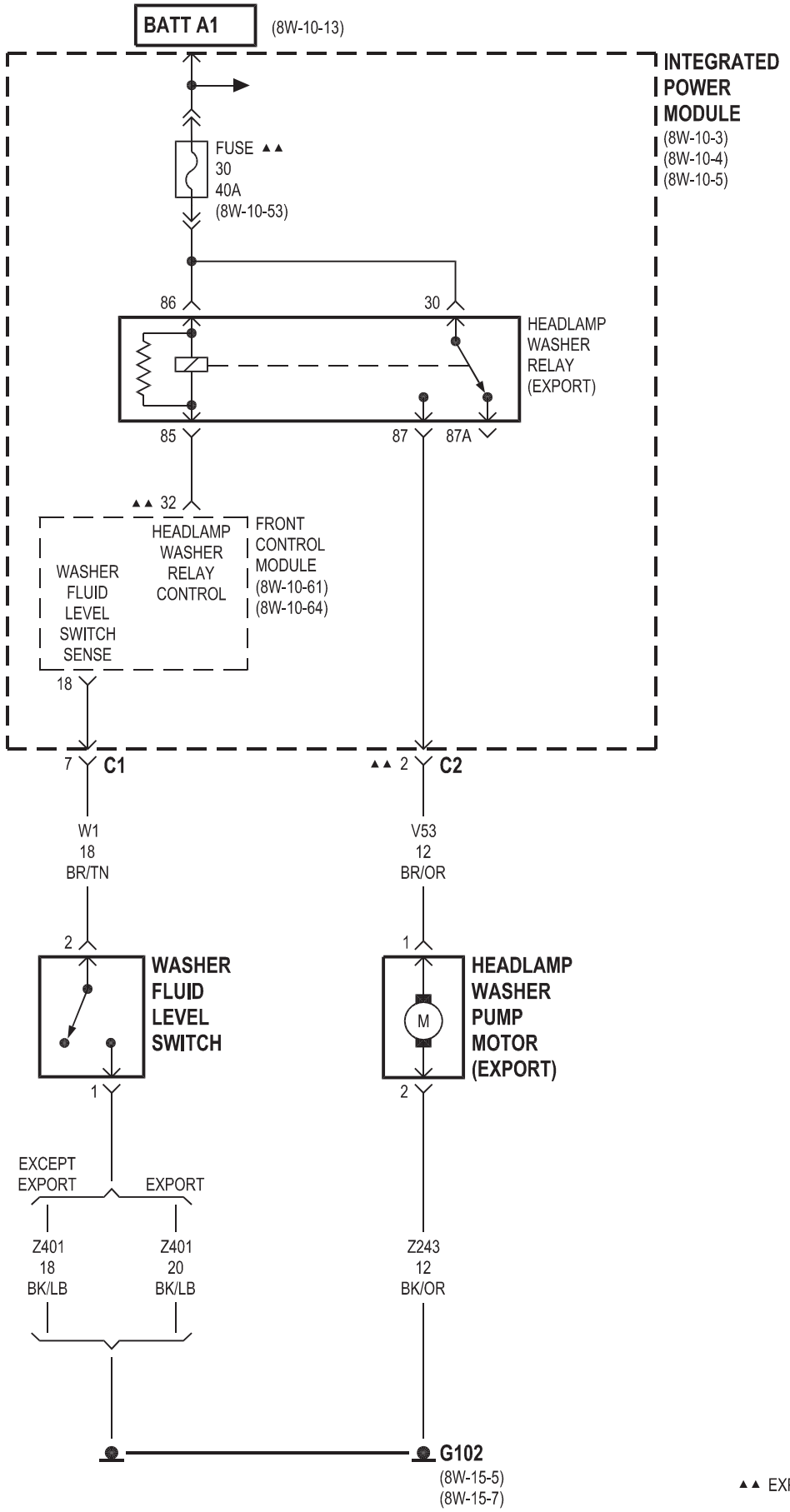
BATT A1
(8W-10-13)
INTEGRATED POWER MODULE
(8W-10-3)
(8W-10-4)
(8W-10-5)
FUSE ▲▲
30
40A
(8W-10-53)
86
30
HEADLAMP WASHER RELAY (EXPORT)
85
87
87A
▲▲ 32
HEADLAMP WASHER RELAY CONTROL
WASHER FLUID LEVEL SWITCH SENSE
FRONT CONTROL MODULE
(8W-10-61)
(8W-10-64)
18
7 C1
▲▲ 2 C2
W1
18
BR/TN
V53
12
BR/OR
2
1
WASHER FLUID LEVEL SWITCH
HEADLAMP WASHER PUMP MOTOR (EXPORT)
M
1
2
EXCEPT EXPORT
EXPORT
Z401
18
BK/LB
Z401
20
BK/LB
Z243
12
BK/OR
G102
(8W-15-5)
(8W-15-7)

▲▲ EXPORT

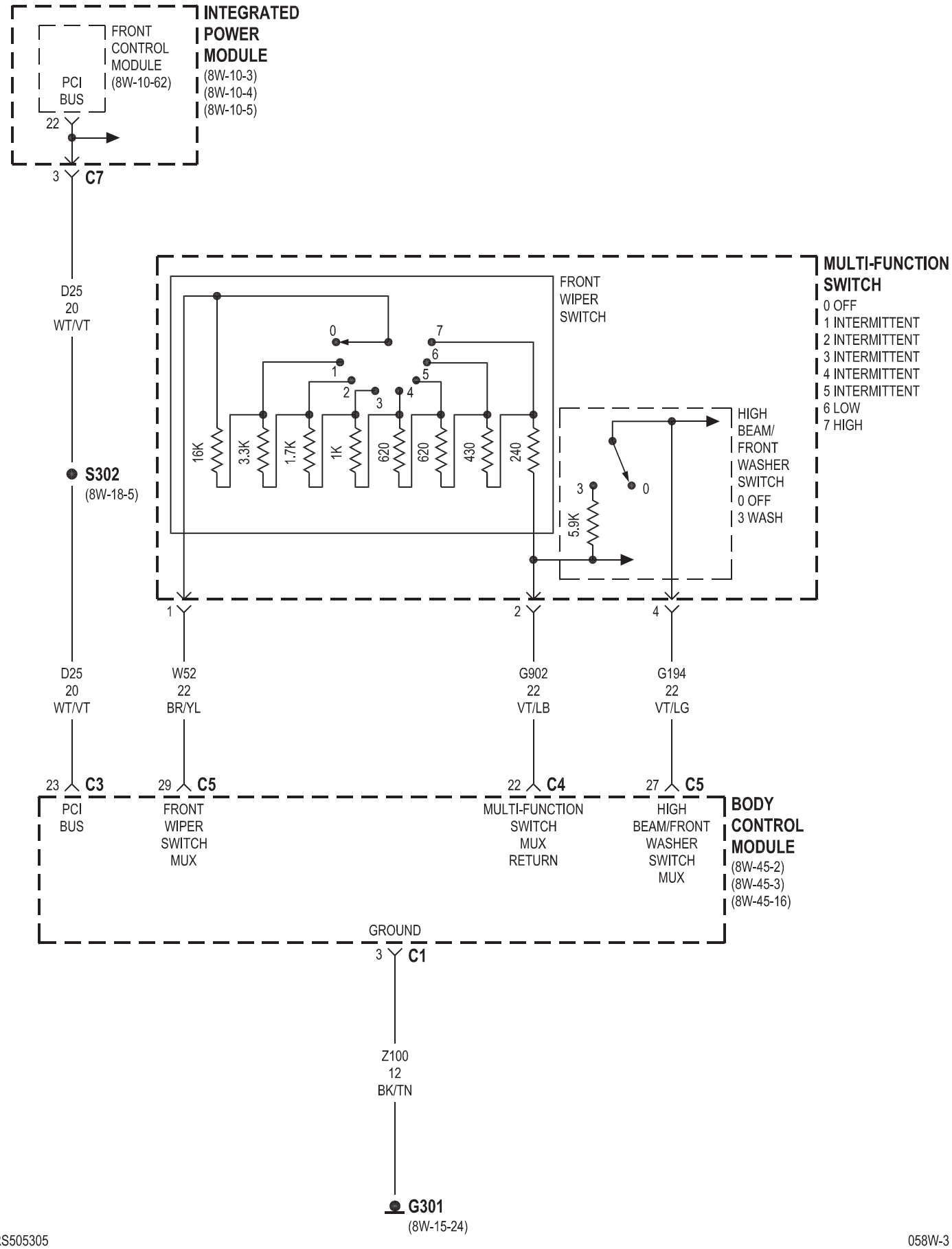
INTEGRATED POWER MODULE
(8W-10-3)
(8W-10-4)
(8W-10-5)
FRONT CONTROL MODULE (8W-10-62)
PCI BUS
22
3 C7
D25
20
WT/VT
S302
(8W-18-5)
MULTI-FUNCTION SWITCH
0 OFF
1 INTERMITTENT
2 INTERMITTENT
3 INTERMITTENT
4 INTERMITTENT
5 INTERMITTENT
6 LOW
7 HIGH
FRONT WIPER SWITCH
0
7
6
1
5
2
3
4
16K
3.3K
1.7K
1K
620
620
430
240
HIGH BEAM/ FRONT WASHER SWITCH
0 OFF
3 WASH
3
0
5.9K
1
2
4
D25
20
WT/VT
W52
22
BR/YL
G902
22
VT/LB
G194
22
VT/LG
23 C3
29 C5
22 C4
27 C5
PCI BUS
FRONT WIPER SWITCH MUX
MULTI-FUNCTION SWITCH MUX RETURN
HIGH BEAM/FRONT WASHER SWITCH MUX
BODY CONTROL MODULE
(8W-45-2)
(8W-45-3)
(8W-45-16)
GROUND
3 C1
Z100
12
BK/TN
G301
(8W-15-24)

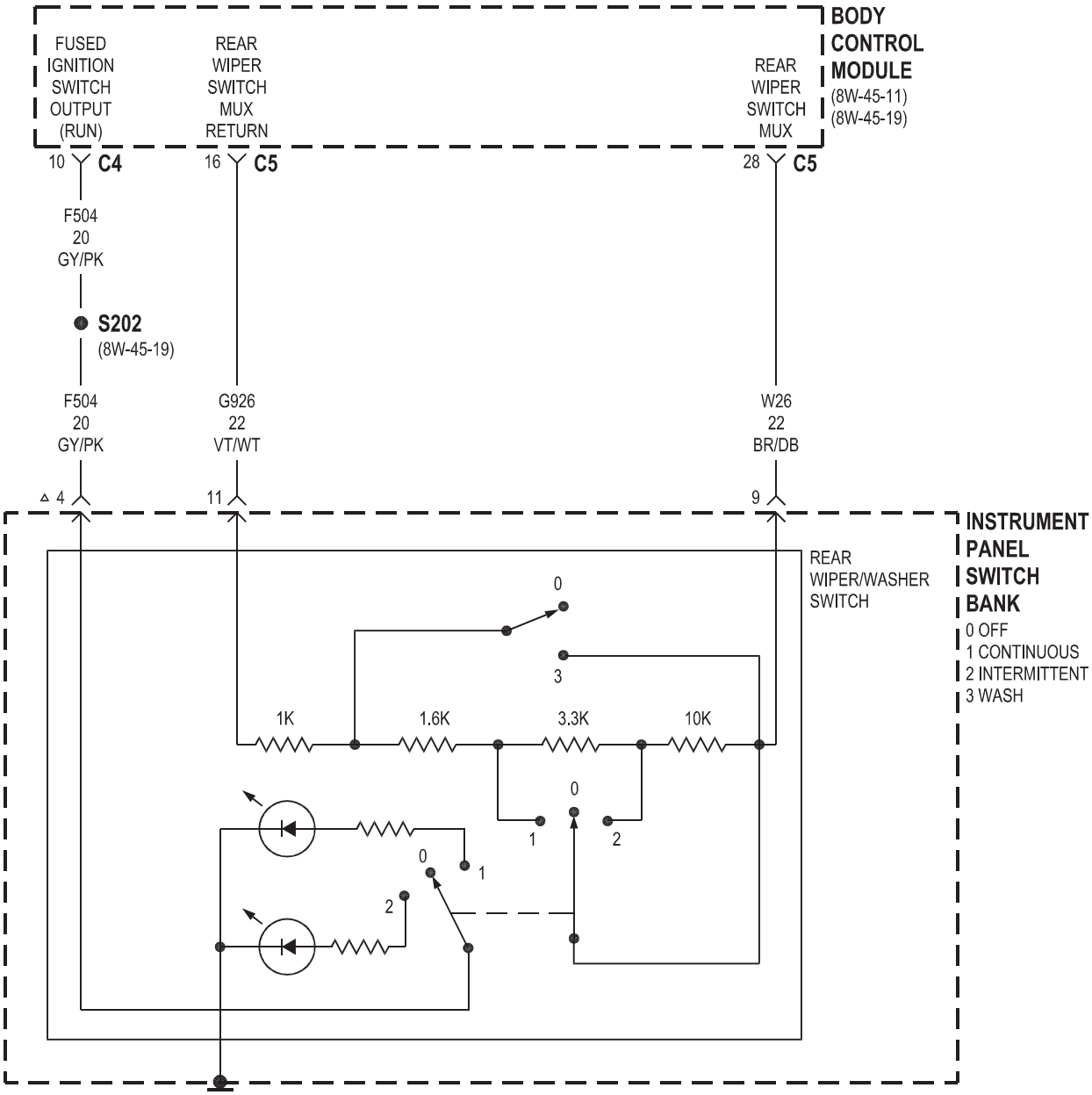

△ HEATED SEATS

MTC/EXCEPT EXPORT

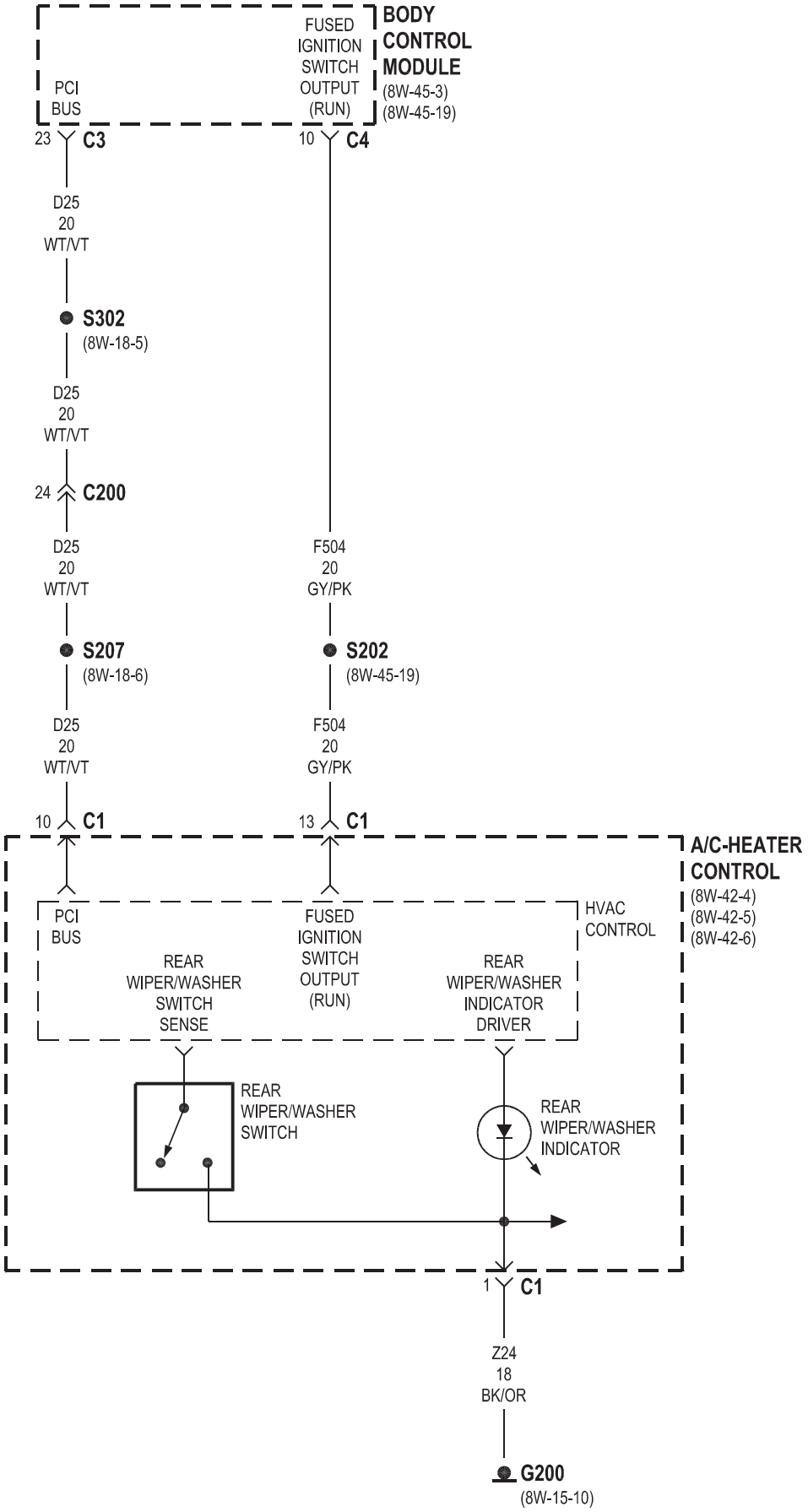

8W-54 TRAILER TOW

Component	Page
Body Control Module	8W-54-2, 3
Front Control Module	8W-54-2, 3
Fuse 2	8W-54-2
Fuse 3	8W-54-3
G302	8W-54-2, 3
Integrated Power Module	8W-54-2, 3
Left Rear Lamp Assembly	8W-54-2
Park Lamp Relay	8W-54-2, 3
Right Rear Lamp Assembly	8W-54-3
Trailer Tow Connector	8W-54-2, 3

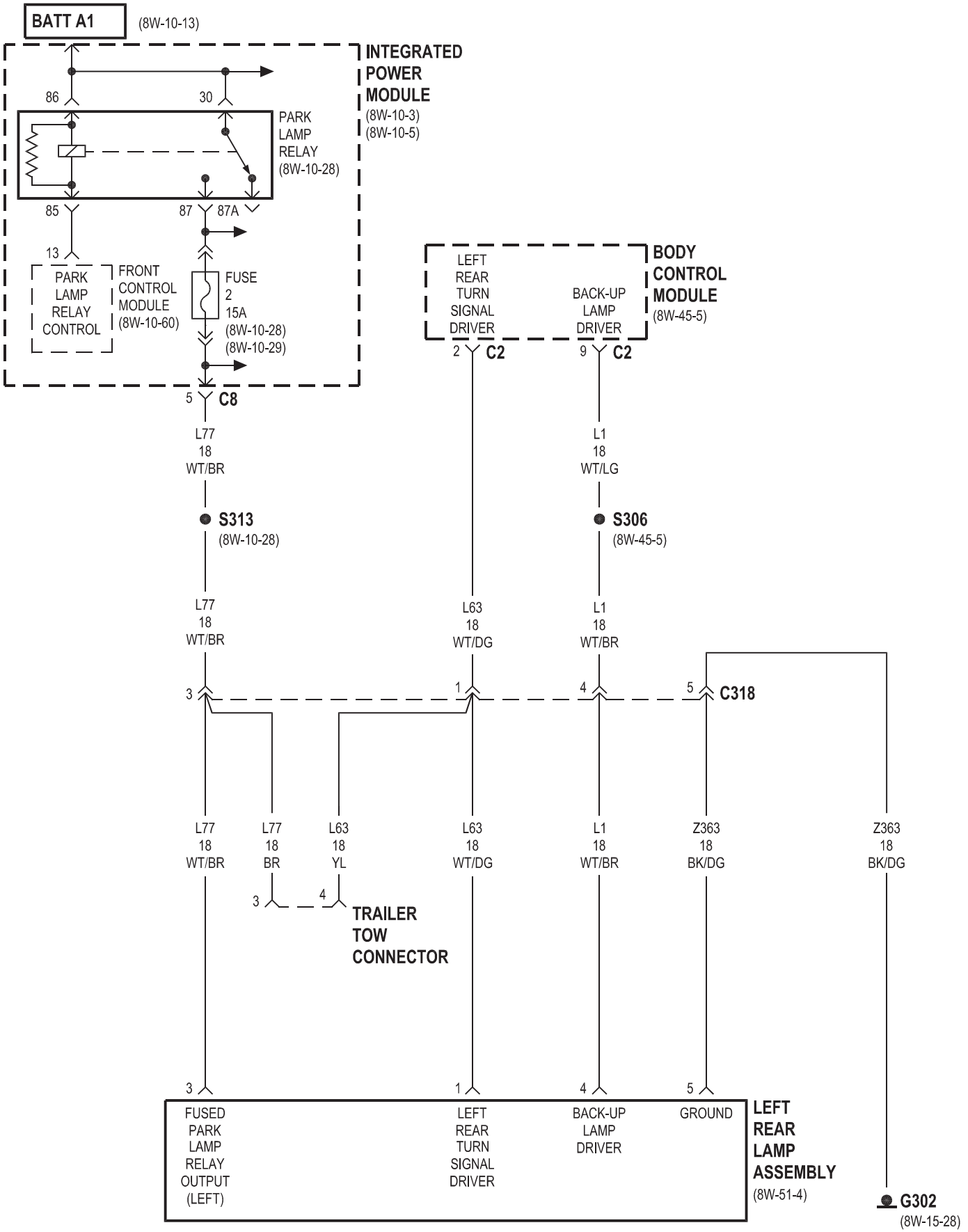
BATT A1
(8W-10-13)
INTEGRATED POWER MODULE
(8W-10-3)
(8W-10-5)
86
30
PARK LAMP RELAY
(8W-10-28)
85
87
87A
13
PARK LAMP RELAY CONTROL
FRONT CONTROL MODULE
(8W-10-60)
FUSE 2 15A
(8W-10-28)
(8W-10-29)
5
C8
L77 18 WT/BR
S313
(8W-10-28)
L77 18 WT/BR
3
LEFT REAR TURN SIGNAL DRIVER
BACK-UP LAMP DRIVER
BODY CONTROL MODULE
(8W-45-5)
2
C2
9
C2
L63 18 WT/DG
1
L1 18 WT/LG
S306
(8W-45-5)
L1 18 WT/BR
4
5
C318
L77 18 WT/BR
L77 18 BR
L63 18 YL
L63 18 WT/DG
L1 18 WT/BR
Z363 18 BK/DG
Z363 18 BK/DG
3
4
TRAILER TOW CONNECTOR
3
1
4
5
FUSED PARK LAMP RELAY OUTPUT (LEFT)
LEFT REAR TURN SIGNAL DRIVER
BACK-UP LAMP DRIVER
GROUND
LEFT REAR LAMP ASSEMBLY
(8W-51-4)
G302
(8W-15-28)

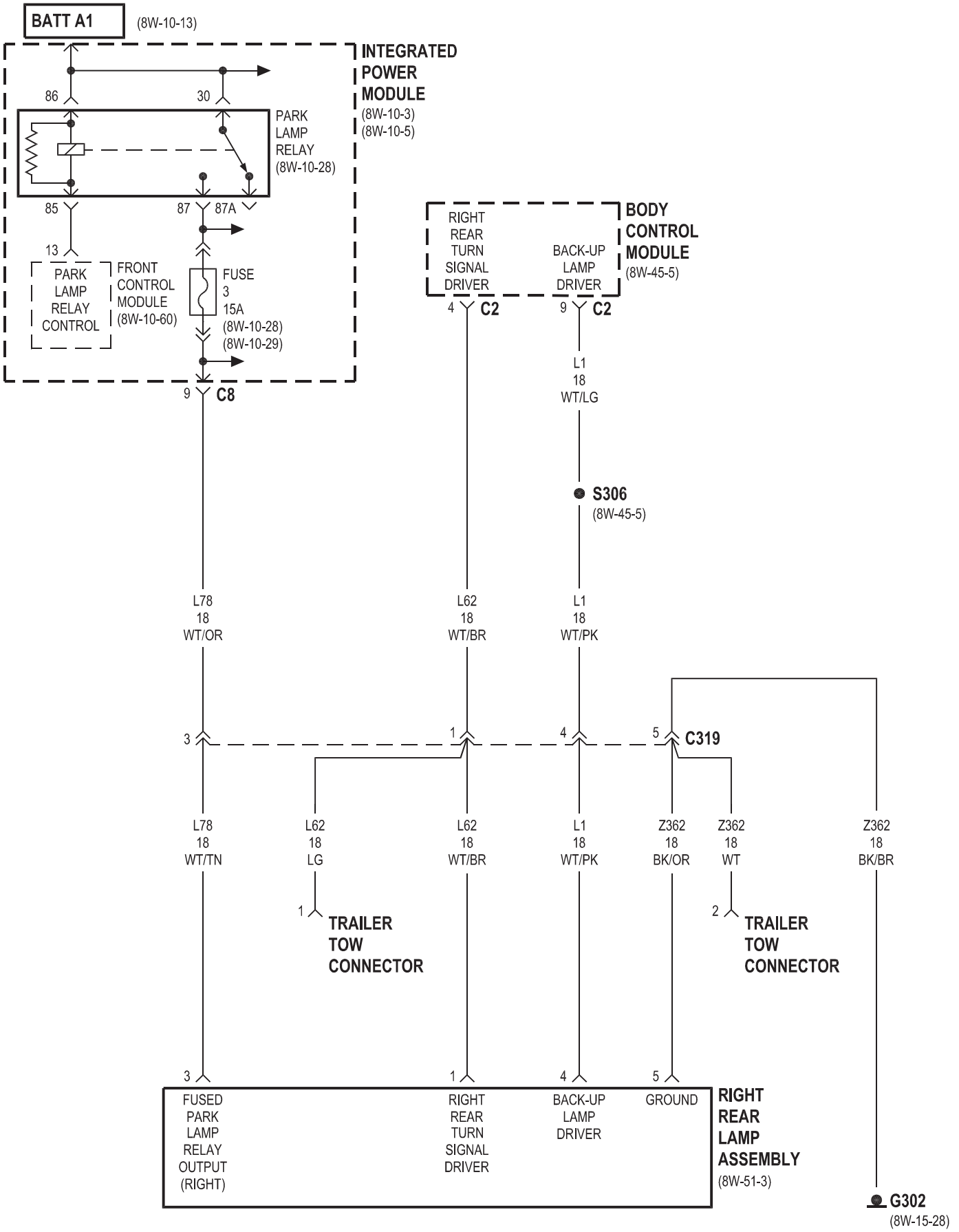
BATT A1
(8W-10-13)
INTEGRATED POWER MODULE
(8W-10-3)
(8W-10-5)
86
30
PARK LAMP RELAY
(8W-10-28)
85
87
87A
13
PARK LAMP RELAY CONTROL
FRONT CONTROL MODULE
(8W-10-60)
FUSE 3 15A
(8W-10-28)
(8W-10-29)
9
C8
RIGHT REAR TURN SIGNAL DRIVER
BACK-UP LAMP DRIVER
BODY CONTROL MODULE
(8W-45-5)
4
C2
9
C2
L1 18 WT/LG
S306
(8W-45-5)
L78 18 WT/OR
L62 18 WT/BR
L1 18 WT/PK
3
1
4
5
C319
L78 18 WT/TN
L62 18 LG
L62 18 WT/BR
L1 18 WT/PK
Z362 18 BK/OR
Z362 18 WT
Z362 18 BK/BR
1
TRAILER TOW CONNECTOR
2
TRAILER TOW CONNECTOR
3
1
4
5
FUSED PARK LAMP RELAY OUTPUT (RIGHT)
RIGHT REAR TURN SIGNAL DRIVER
BACK-UP LAMP DRIVER
GROUND
RIGHT REAR LAMP ASSEMBLY
(8W-51-3)
G302
(8W-15-28)

8W-55 NAVIGATION/TELECOMMUNICATIONS

Component	Page
CD Changer	8W-55-5
DVD/CD Changer	8W-55-2, 4
Fuse 14	8W-55-2
G200	8W-55-2
Hands Free Module	8W-55-2, 3, 4, 5
Integrated Power Module	8W-55-2
Radio	8W-55-4, 5
Rear View Mirror	8W-55-2, 3

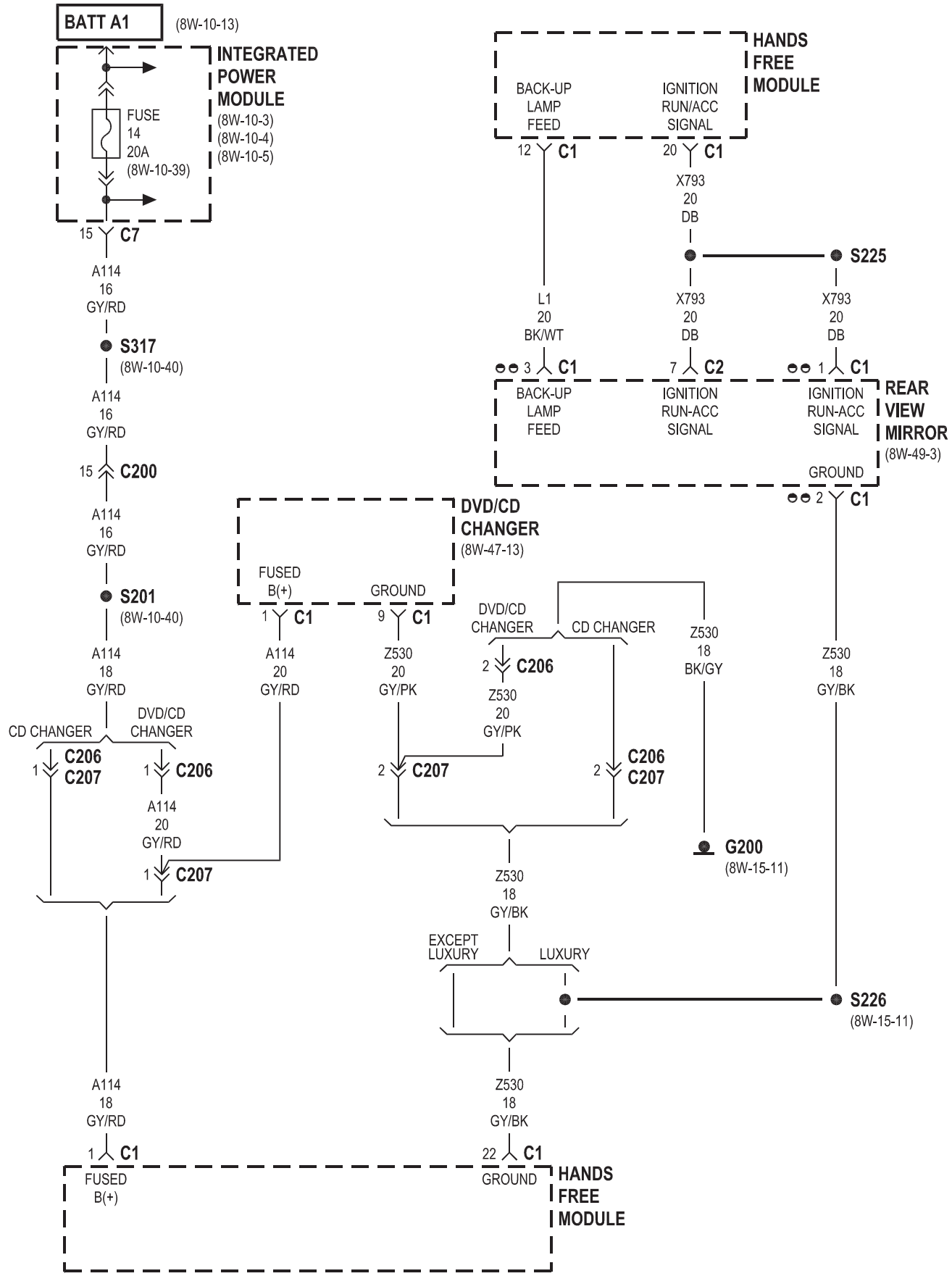
BATT A1
(8W-10-13)
INTEGRATED POWER MODULE
(8W-10-3)
(8W-10-4)
(8W-10-5)
FUSE 14 20A
(8W-10-39)
15 C7
A114 16 GY/RD
S317
(8W-10-40)
A114 16 GY/RD
15 C200
A114 16 GY/RD
S201
(8W-10-40)
A114 18 GY/RD
CD CHANGER
DVD/CD CHANGER
1 C206 C207
1 C206
A114 20 GY/RD
1 C207
A114 18 GY/RD
1 C1
FUSED B(+)
HANDS FREE MODULE
DVD/CD CHANGER
(8W-47-13)
FUSED B(+)
1 C1
A114 20 GY/RD
GROUND
9 C1
Z530 20 GY/PK
DVD/CD CHANGER
CD CHANGER
2 C206
Z530 20 GY/PK
2 C207
Z530 18 GY/BK
22 C1
GROUND
HANDS FREE MODULE
BACK-UP LAMP FEED
12 C1
IGNITION RUN/ACC SIGNAL
20 C1
X793 20 DB
S225
L1 20 BK/WT
3 C1
X793 20 DB
7 C2
X793 20 DB
1 C1
REAR VIEW MIRROR
(8W-49-3)
BACK-UP LAMP FEED
IGNITION RUN-ACC SIGNAL
IGNITION RUN-ACC SIGNAL
GROUND
2 C1
Z530 18 BK/GY
2 C206 C207
G200
(8W-15-11)
Z530 18 GY/BK
EXCEPT LUXURY
LUXURY
S226
(8W-15-11)
Z530 18 GY/BK
EXCEPT AUTO HEADLAMP

HANDS FREE

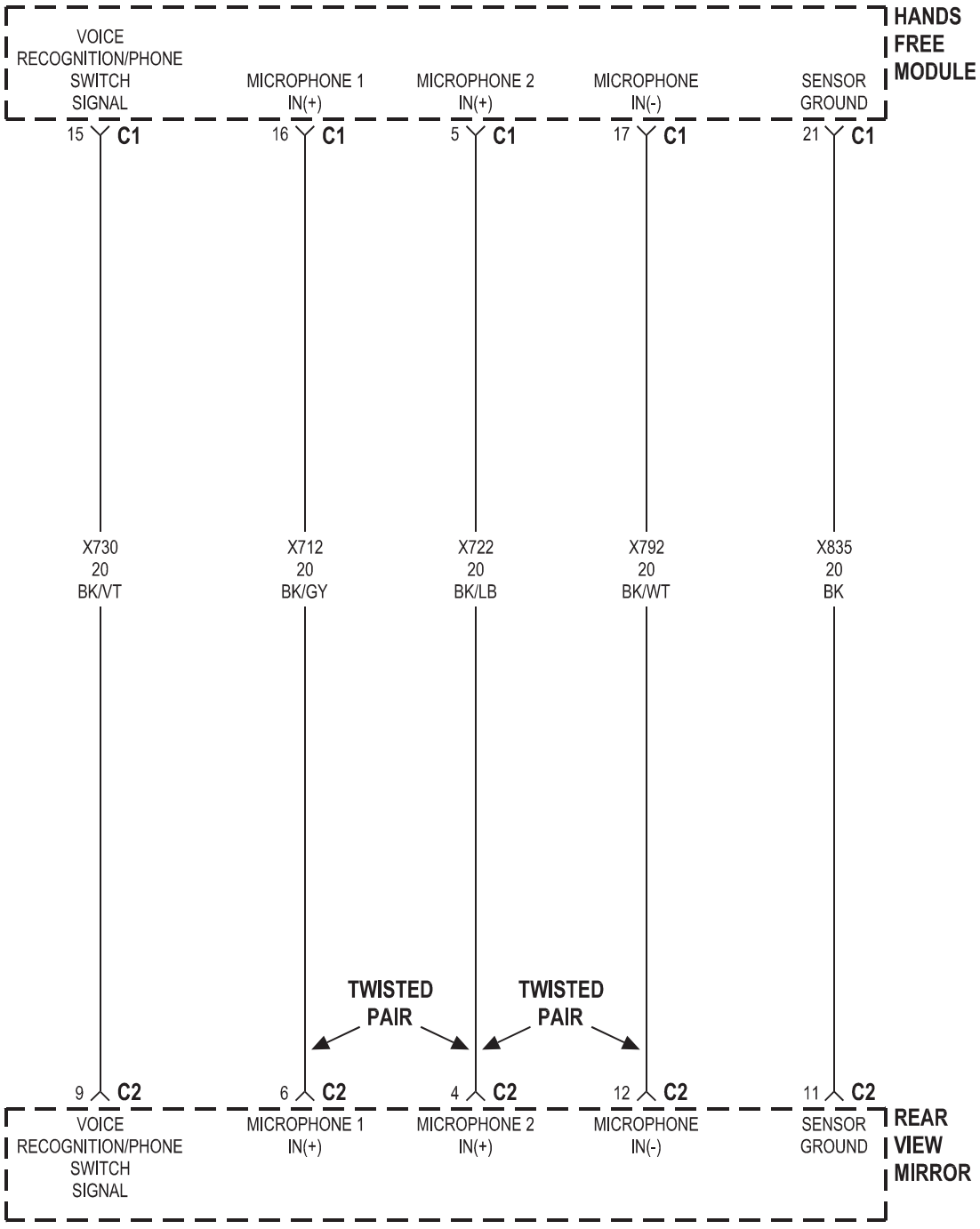
HANDS FREE MODULE
VOICE RECOGNITION/PHONE SWITCH SIGNAL
MICROPHONE 1 IN(+)
MICROPHONE 2 IN(+)
MICROPHONE IN(-)
SENSOR GROUND
15 C1
16 C1
5 C1
17 C1
21 C1
X730 20 BK/VT
X712 20 BK/GY
X722 20 BK/LB
X792 20 BK/WT
X835 20 BK
TWISTED PAIR
TWISTED PAIR
9 C2
6 C2
4 C2
12 C2
11 C2
VOICE RECOGNITION/PHONE SWITCH SIGNAL
MICROPHONE 1 IN(+)
MICROPHONE 2 IN(+)
MICROPHONE IN(-)
SENSOR GROUND
REAR VIEW MIRROR

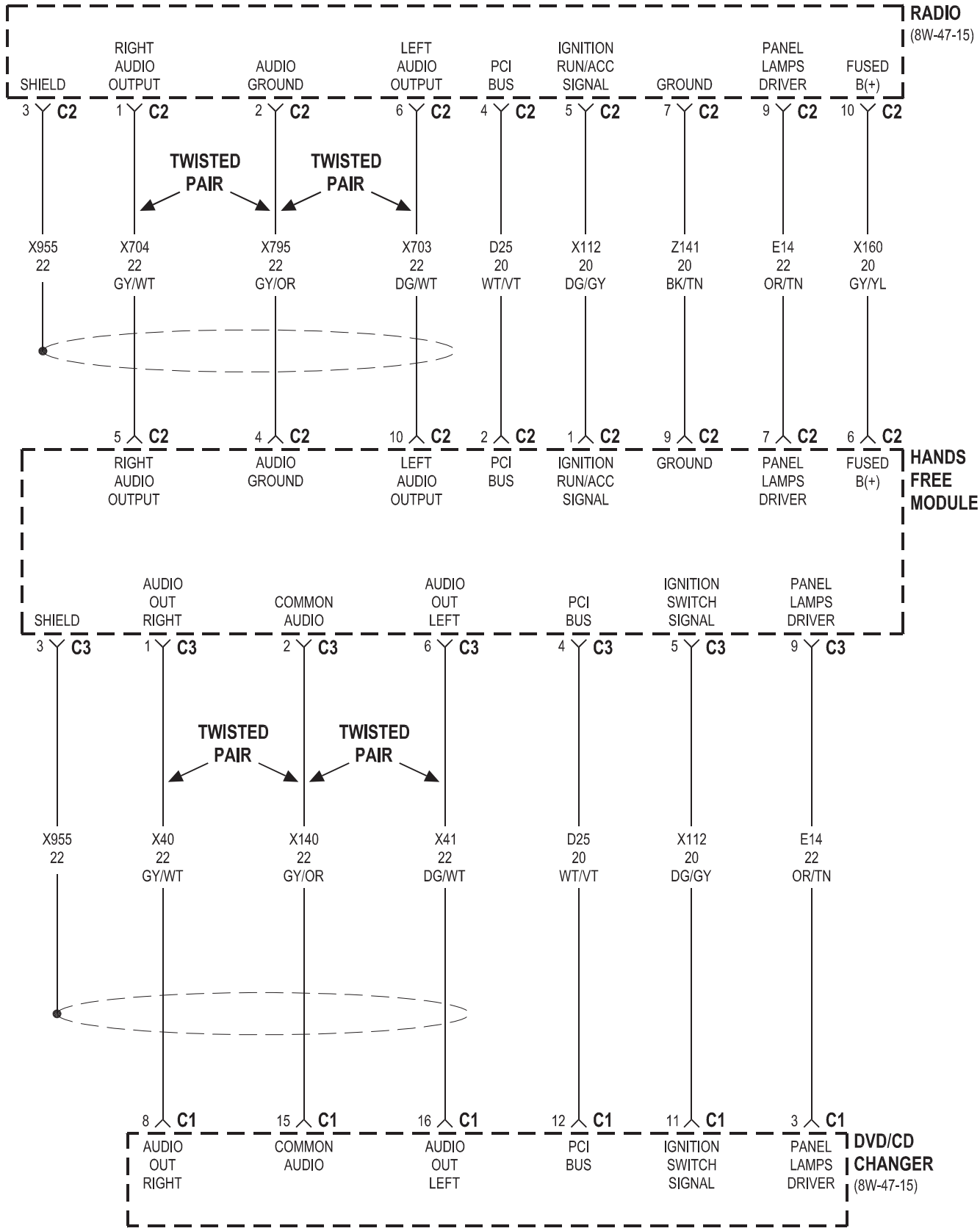
RADIO
(8W-47-15)
SHIELD
RIGHT AUDIO OUTPUT
AUDIO GROUND
LEFT AUDIO OUTPUT
PCI BUS
IGNITION RUN/ACC SIGNAL
GROUND
PANEL LAMPS DRIVER
FUSED B(+)
3 C2
1 C2
2 C2
6 C2
4 C2
5 C2
7 C2
9 C2
10 C2
TWISTED PAIR
TWISTED PAIR
X955 22
X704 22 GY/WT
X795 22 GY/OR
X703 22 DG/WT
D25 20 WT/VT
X112 20 DG/GY
Z141 20 BK/TN
E14 22 OR/TN
X160 20 GY/YL
5 C2
4 C2
10 C2
2 C2
1 C2
9 C2
7 C2
6 C2
RIGHT AUDIO OUTPUT
AUDIO GROUND
LEFT AUDIO OUTPUT
PCI BUS
IGNITION RUN/ACC SIGNAL
GROUND
PANEL LAMPS DRIVER
FUSED B(+)
HANDS FREE MODULE
SHIELD
AUDIO OUT RIGHT
COMMON AUDIO
AUDIO OUT LEFT
PCI BUS
IGNITION SWITCH SIGNAL
PANEL LAMPS DRIVER
3 C3
1 C3
2 C3
6 C3
4 C3
5 C3
9 C3
TWISTED PAIR
TWISTED PAIR
X955 22
X40 22 GY/WT
X140 22 GY/OR
X41 22 DG/WT
D25 20 WT/VT
X112 20 DG/GY
E14 22 OR/TN
8 C1
15 C1
16 C1
12 C1
11 C1
3 C1
AUDIO OUT RIGHT
COMMON AUDIO
AUDIO OUT LEFT
PCI BUS
IGNITION SWITCH SIGNAL
PANEL LAMPS DRIVER
DVD/CD CHANGER
(8W-47-15)

HANDS FREE/CD CHANGER

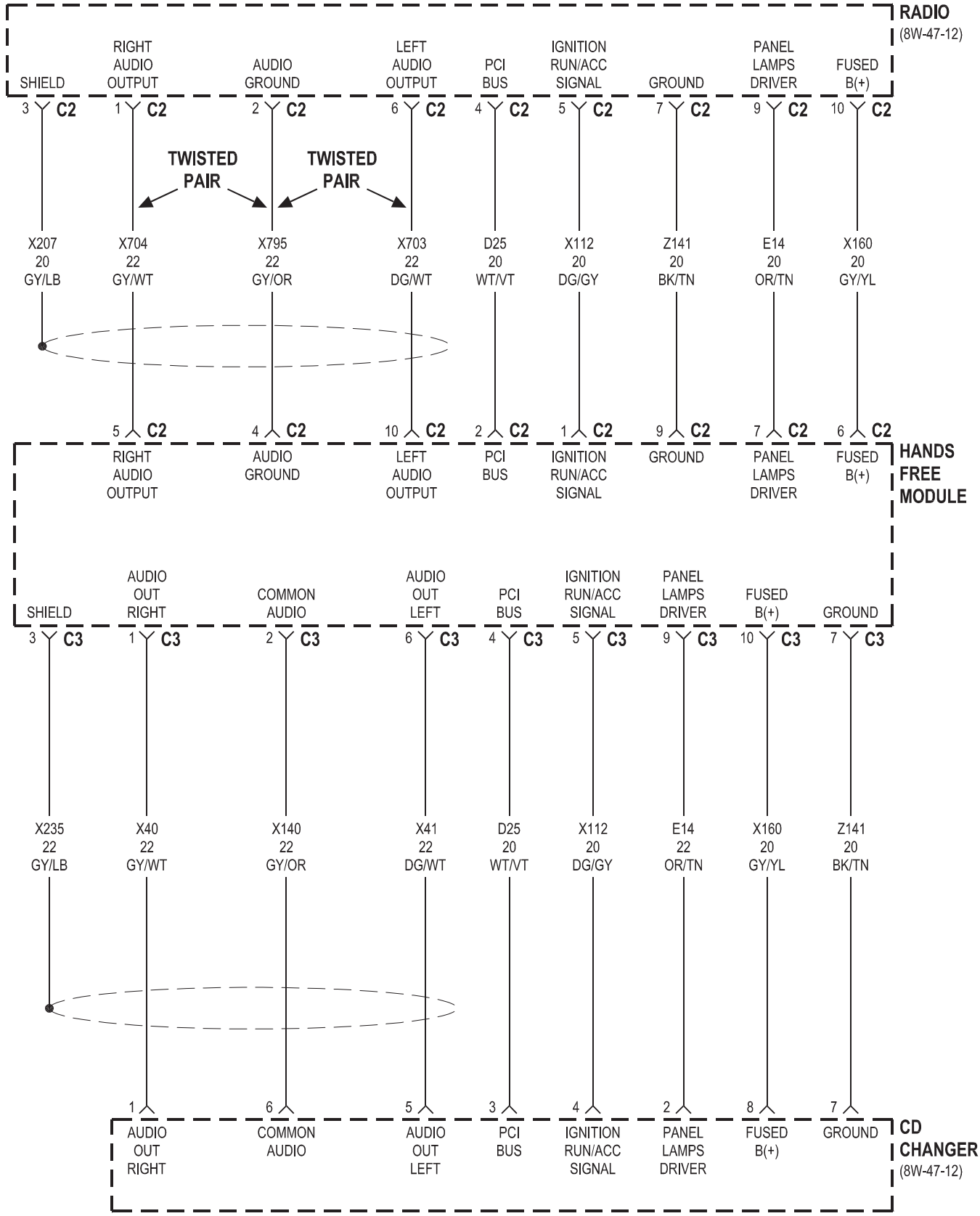

8W-56 CONVENIENCE SYSTEMS

Component	Page
Adjustable Pedals Motor	8W-56-2, 3
Adjustable Pedals Relay	8W-56-2
Adjustable Pedals Sensor	8W-56-3
Adjustable Pedals Switch	8W-56-2
Driver Heated Seat Module	8W-56-3
Front Control Module	8W-56-2, 4
Fuse 14	8W-56-2
Fuse 18	8W-56-2
Fuse 22	8W-56-3
G200	8W-56-2
G300	8W-56-3
G302	8W-56-4
Ignition Switch	8W-56-4
Integrated Power Module	8W-56-2, 3, 4
Left Sliding Door Control Module	8W-56-2
Memory Seat/Mirror/Adjustable Pedals Module	8W-56-2, 3
Park Assist Display	8W-56-4
Park Assist Module	8W-56-4, 5, 6
Park Assist Sensor No. 1	8W-56-5, 6
Park Assist Sensor No. 2	8W-56-5, 6
Park Assist Sensor No. 3	8W-56-5, 6
Park Assist Sensor No. 4	8W-56-5, 6
Power Seat Circuit Breaker	8W-56-3
Sentry Key Remote Entry Module	8W-56-4

ADJUSTABLE PEDALS/EXCEPT EXPORT

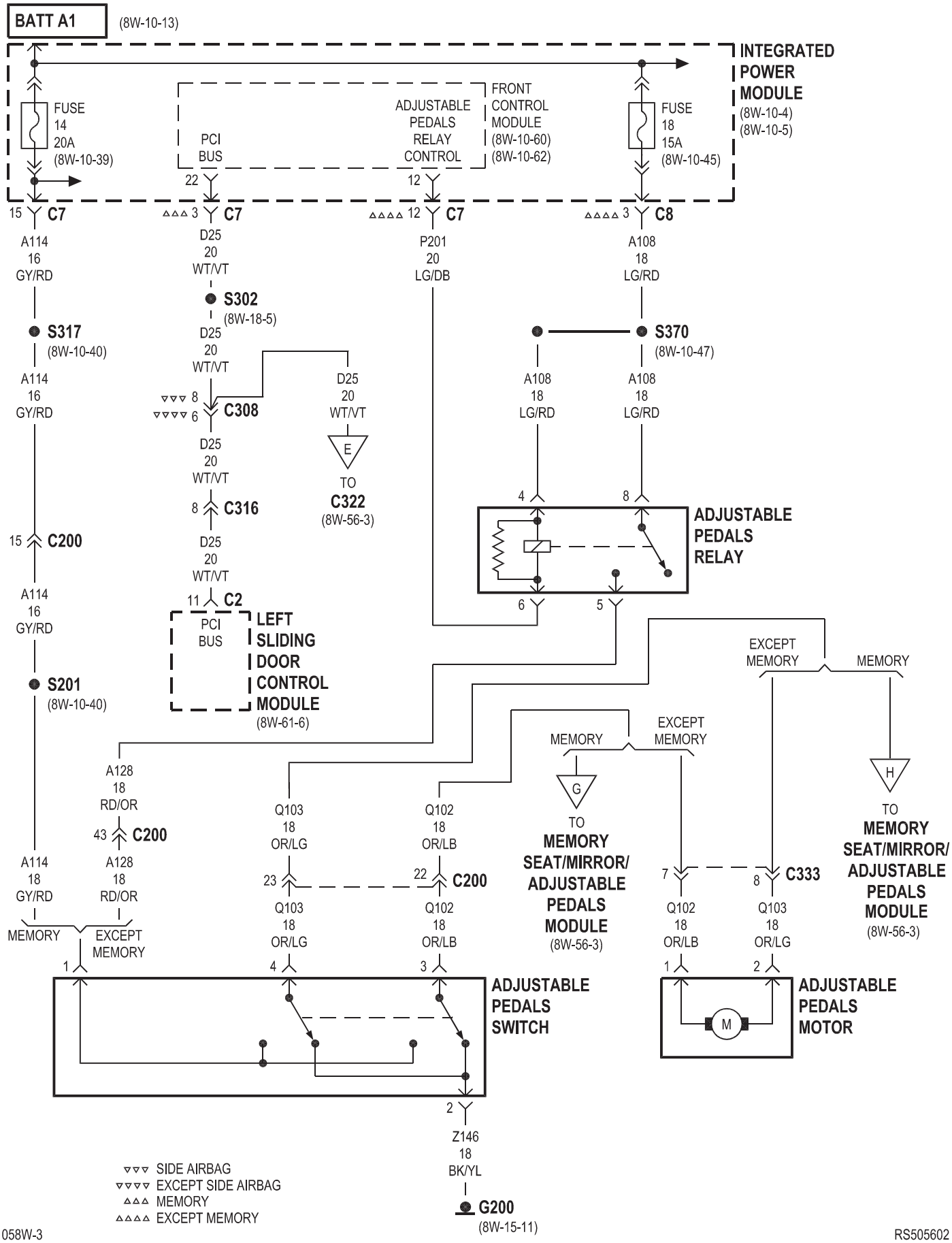

ADJUSTABLE PEDALS/MEMORY/EXCEPT EXPORT

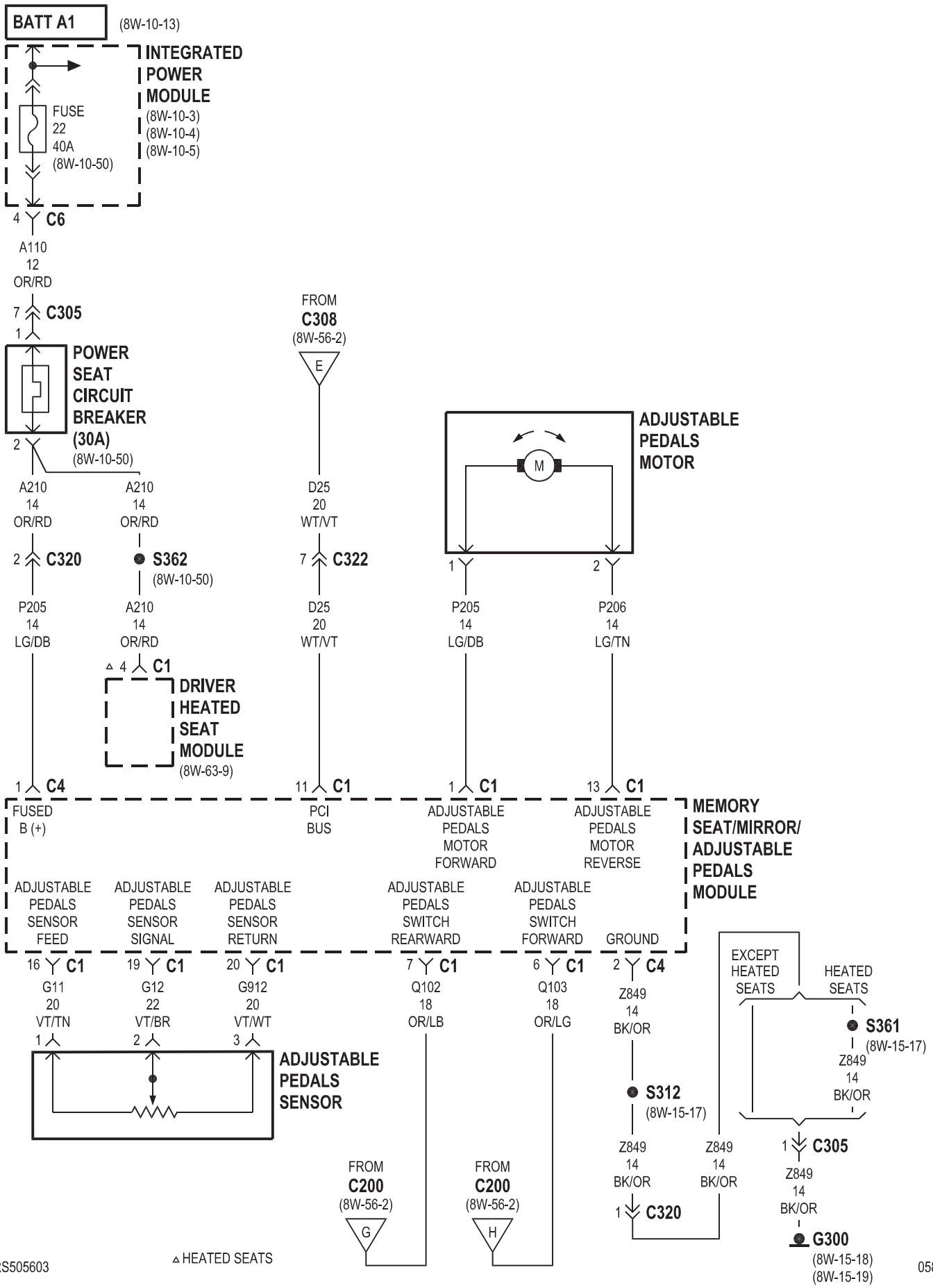

△ HEATED SEATS

RS505603

058W-3

PARK ASSIST

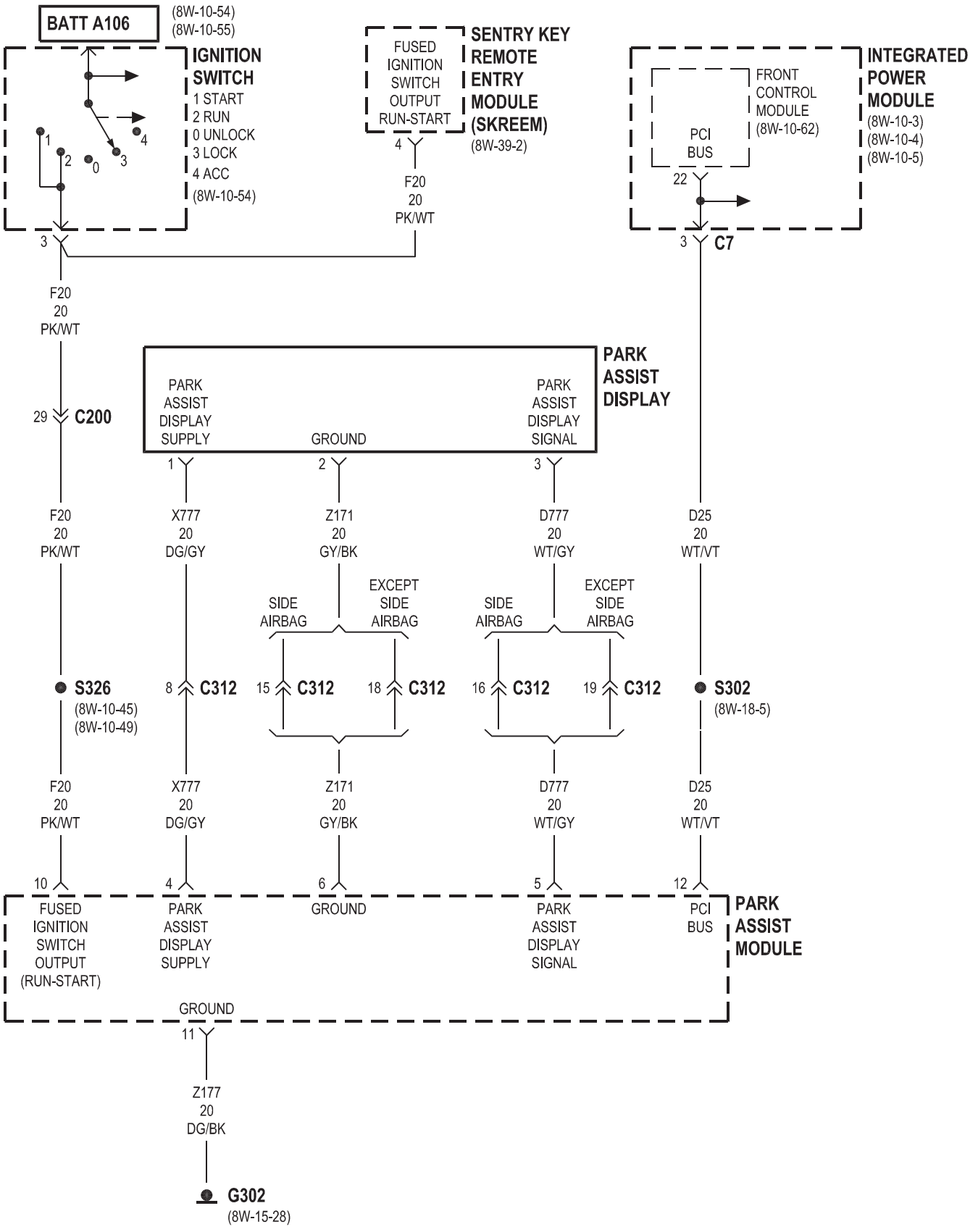
BATT A106
(8W-10-54)
(8W-10-55)
IGNITION SWITCH
1 START
2 RUN
0 UNLOCK
3 LOCK
4 ACC
(8W-10-54)
FUSED IGNITION SWITCH OUTPUT RUN-START
SENTRY KEY REMOTE ENTRY MODULE (SKREEM)
(8W-39-2)
F20 20 PK/WT
INTEGRATED POWER MODULE
(8W-10-3)
(8W-10-4)
(8W-10-5)
FRONT CONTROL MODULE
(8W-10-62)
PCI BUS
C7
C200
PARK ASSIST DISPLAY
PARK ASSIST DISPLAY SUPPLY
GROUND
PARK ASSIST DISPLAY SIGNAL
X777 20 DG/GY
Z171 20 GY/BK
D777 20 WT/GY
D25 20 WT/VT
SIDE AIRBAG
EXCEPT SIDE AIRBAG
S326
(8W-10-45)
(8W-10-49)
C312
S302
(8W-18-5)
FUSED IGNITION SWITCH OUTPUT (RUN-START)
PARK ASSIST DISPLAY SUPPLY
GROUND
PARK ASSIST DISPLAY SIGNAL
PCI BUS
PARK ASSIST MODULE
Z177 20 DG/BK
G302
(8W-15-28)

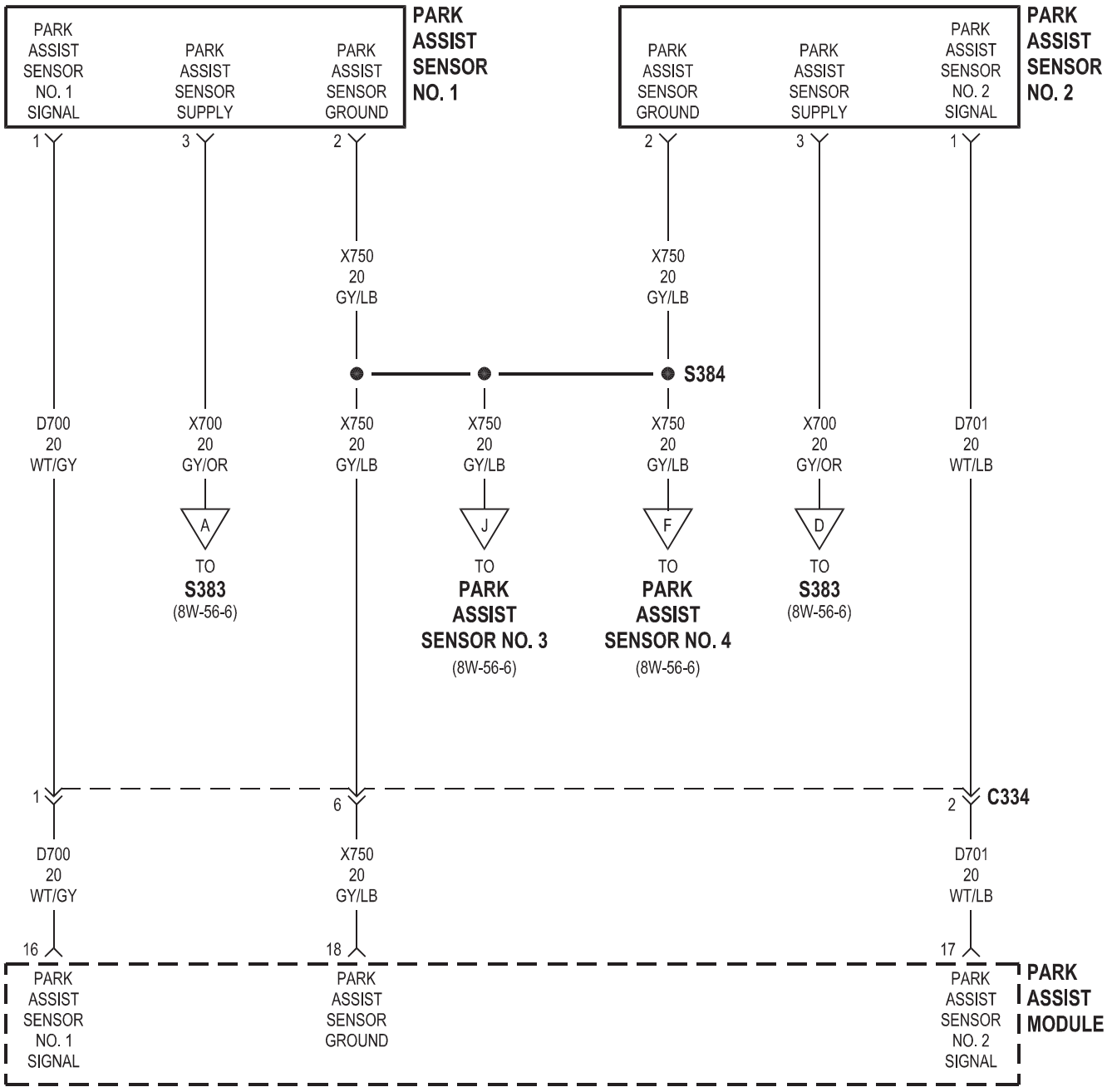
PARK ASSIST SENSOR NO. 1
PARK ASSIST SENSOR NO. 1 SIGNAL
PARK ASSIST SENSOR SUPPLY
PARK ASSIST SENSOR GROUND
PARK ASSIST SENSOR NO. 2
PARK ASSIST SENSOR NO. 2 SIGNAL
PARK ASSIST SENSOR SUPPLY
PARK ASSIST SENSOR GROUND
1
3
2
2
3
1
X750 20 GY/LB
X750 20 GY/LB
S384
D700 20 WT/GY
X700 20 GY/OR
X750 20 GY/LB
X750 20 GY/LB
X750 20 GY/LB
X700 20 GY/OR
D701 20 WT/LB
A
J
F
D
TO S383 (8W-56-6)
TO PARK ASSIST SENSOR NO. 3 (8W-56-6)
TO PARK ASSIST SENSOR NO. 4 (8W-56-6)
TO S383 (8W-56-6)
C334
1
6
2
D700 20 WT/GY
X750 20 GY/LB
D701 20 WT/LB
16
18
17
PARK ASSIST SENSOR NO. 1 SIGNAL
PARK ASSIST SENSOR GROUND
PARK ASSIST SENSOR NO. 2 SIGNAL
PARK ASSIST MODULE

PARK ASSIST

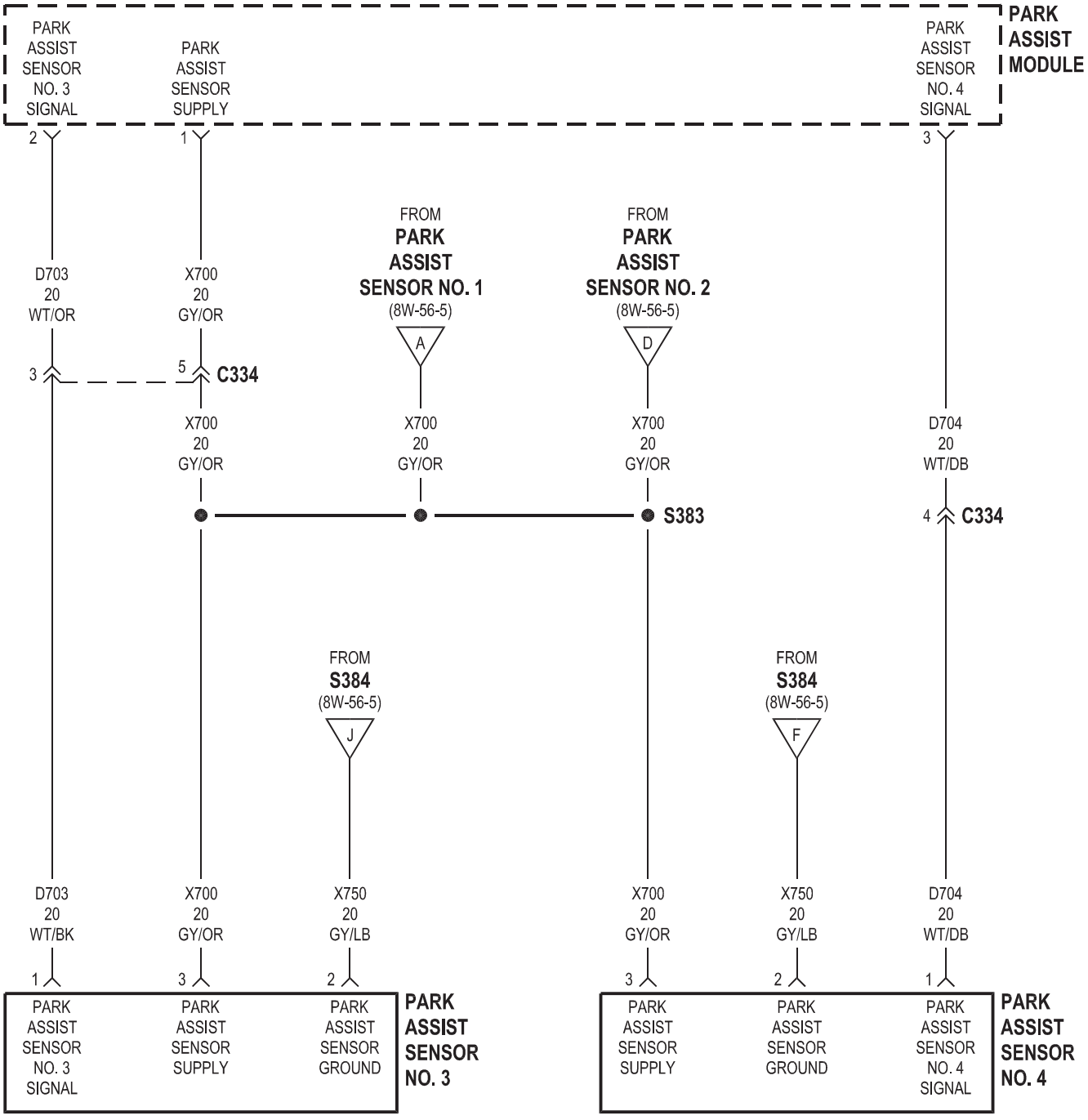
PARK ASSIST MODULE
PARK ASSIST SENSOR NO. 3 SIGNAL
PARK ASSIST SENSOR SUPPLY
PARK ASSIST SENSOR NO. 4 SIGNAL
2
1
3
D703 20 WT/OR
X700 20 GY/OR
3
5
C334
FROM PARK ASSIST SENSOR NO. 1 (8W-56-5)
A
FROM PARK ASSIST SENSOR NO. 2 (8W-56-5)
D
X700 20 GY/OR
X700 20 GY/OR
X700 20 GY/OR
D704 20 WT/DB
4
C334
S383
FROM S384 (8W-56-5)
J
FROM S384 (8W-56-5)
F
D703 20 WT/BK
X700 20 GY/OR
X750 20 GY/LB
X700 20 GY/OR
X750 20 GY/LB
D704 20 WT/DB
1
3
2
3
2
1
PARK ASSIST SENSOR NO. 3 SIGNAL
PARK ASSIST SENSOR SUPPLY
PARK ASSIST SENSOR GROUND
PARK ASSIST SENSOR NO. 3
PARK ASSIST SENSOR SUPPLY
PARK ASSIST SENSOR GROUND
PARK ASSIST SENSOR NO. 4 SIGNAL
PARK ASSIST SENSOR NO. 4

8W-60 POWER WINDOWS

Component	Page
Accessory Relay	8W-60-2
Driver Power Window Motor	8W-60-3, 4, 6
Driver Power Window Switch	8W-60-3, 4, 5, 6, 7
Front Control Module	8W-60-2
Fuse 28	8W-60-2
G300	8W-60-3, 4
G301	8W-60-6
Integrated Power Module	8W-60-2
Left Rear Vent Motor	8W-60-3, 6
Passenger Power Window Motor	8W-60-5, 7
Passenger Power Window Switch	8W-60-2, 5, 7
Power Window Circuit Breaker	8W-60-2
Power Window Switch	8W-60-4, 5
Right Rear Vent Motor	8W-60-3, 6

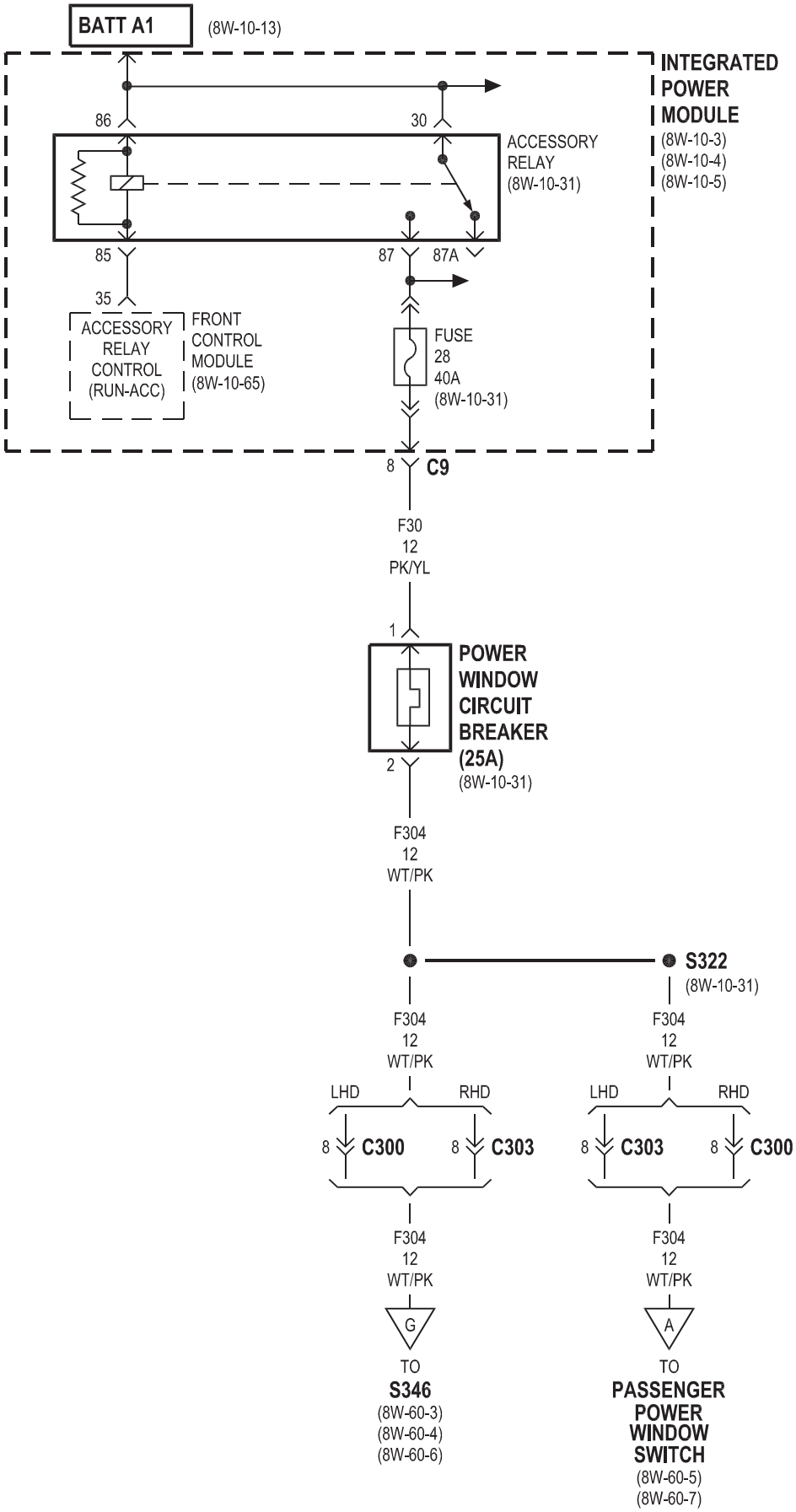
BATT A1
(8W-10-13)
INTEGRATED POWER MODULE
(8W-10-3)
(8W-10-4)
(8W-10-5)
86
30
ACCESSORY RELAY
(8W-10-31)
85
87
87A
35
ACCESSORY RELAY CONTROL (RUN-ACC)
FRONT CONTROL MODULE
(8W-10-65)
FUSE 28 40A
(8W-10-31)
8
C9
F30
12
PK/YL
1
POWER WINDOW CIRCUIT BREAKER (25A)
(8W-10-31)
2
F304
12
WT/PK
S322
(8W-10-31)
F304
12
WT/PK
LHD
RHD
8
C300
8
C303
F304
12
WT/PK
G
TO
S346
(8W-60-3)
(8W-60-4)
(8W-60-6)
F304
12
WT/PK
LHD
RHD
8
C303
8
C300
F304
12
WT/PK
A
TO
PASSENGER POWER WINDOW SWITCH
(8W-60-5)
(8W-60-7)

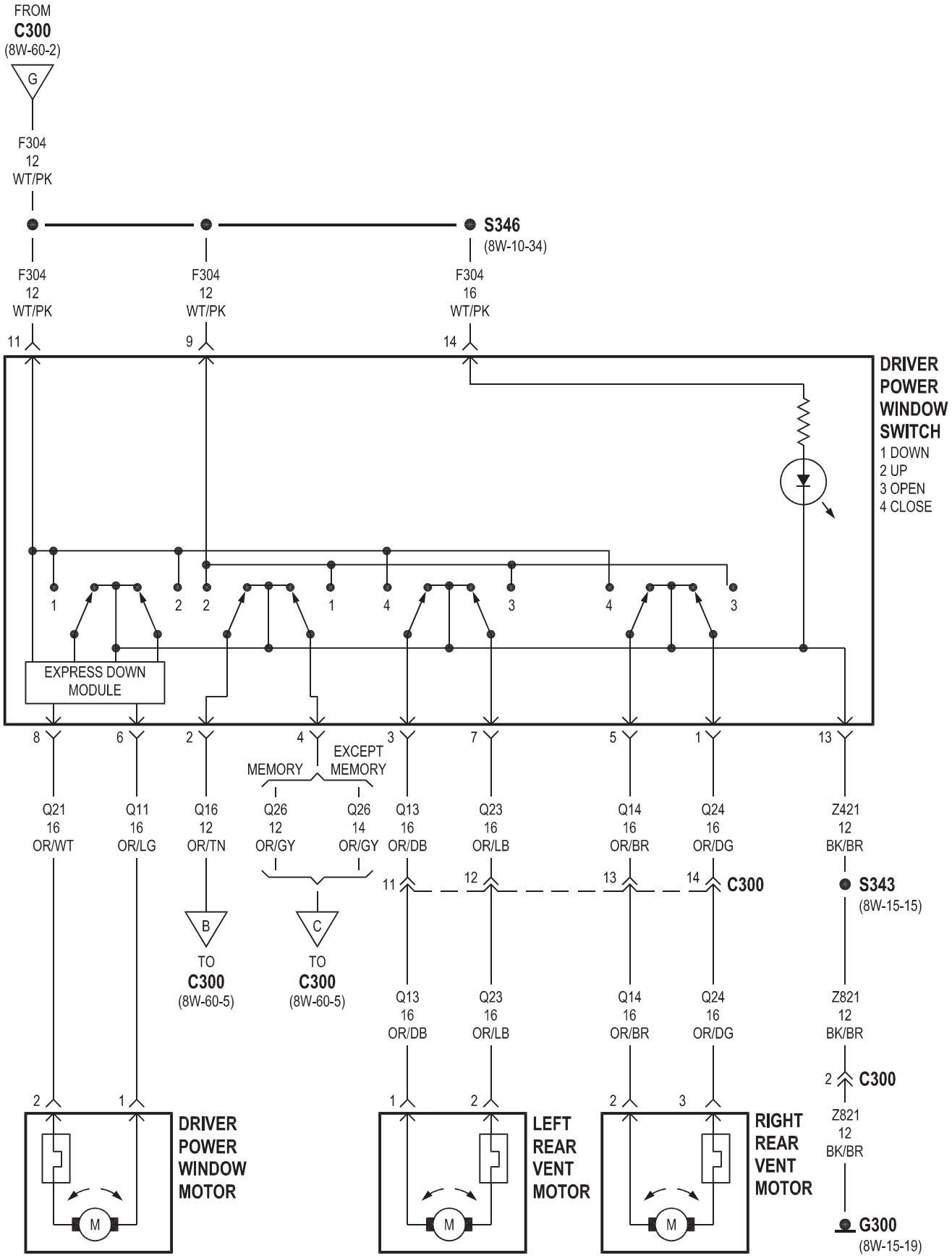
FROM
C300
(8W-60-2)
G
F304
12
WT/PK
S346
(8W-10-34)
F304
12
WT/PK
F304
12
WT/PK
F304
16
WT/PK
11
9
14
DRIVER
POWER
WINDOW
SWITCH
1 DOWN
2 UP
3 OPEN
4 CLOSE
EXPRESS DOWN
MODULE
8
6
2
4
3
7
5
1
13
MEMORY
EXCEPT
MEMORY
Q21
16
OR/WT
Q11
16
OR/LG
Q16
12
OR/TN
Q26
12
OR/GY
Q26
14
OR/GY
Q13
16
OR/DB
Q23
16
OR/LB
Q14
16
OR/BR
Q24
16
OR/DG
Z421
12
BK/BR
11
12
13
14
C300
S343
(8W-15-15)
B
C
TO
C300
(8W-60-5)
TO
C300
(8W-60-5)
Q13
16
OR/DB
Q23
16
OR/LB
Q14
16
OR/BR
Q24
16
OR/DG
Z821
12
BK/BR
2
C300
Z821
12
BK/BR
G300
(8W-15-19)
2
1
1
2
2
3
M
M
M
DRIVER
POWER
WINDOW
MOTOR
LEFT
REAR
VENT
MOTOR
RIGHT
REAR
VENT
MOTOR

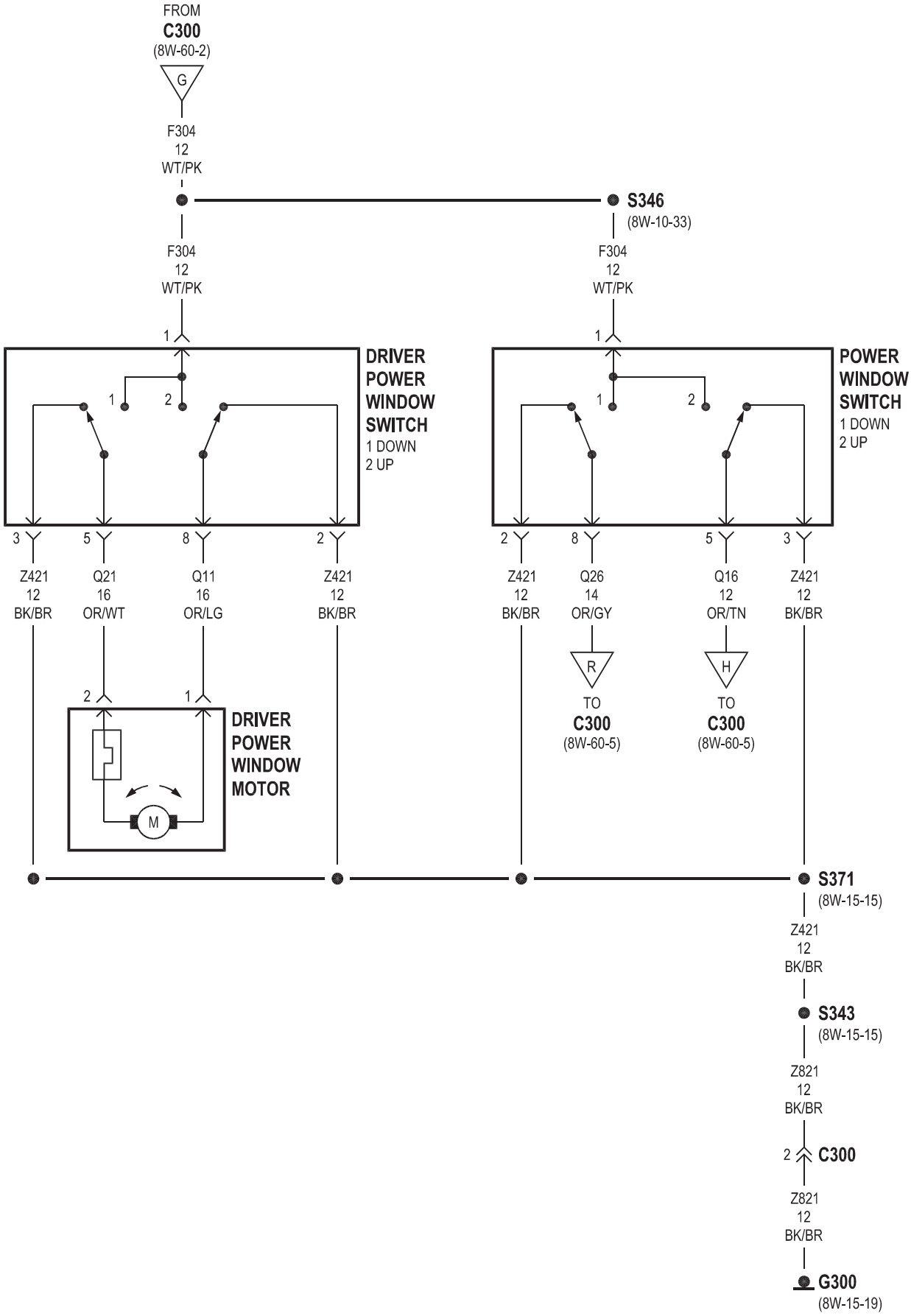
FROM
C300
(8W-60-2)
G
F304
12
WT/PK
S346
(8W-10-33)
F304
12
WT/PK
F304
12
WT/PK
1
1
2
DRIVER
POWER
WINDOW
SWITCH
1 DOWN
2 UP
1
1
2
POWER
WINDOW
SWITCH
1 DOWN
2 UP
3
5
8
2
2
8
5
3
Z421
12
BK/BR
Q21
16
OR/WT
Q11
16
OR/LG
Z421
12
BK/BR
Z421
12
BK/BR
Q26
14
OR/GY
Q16
12
OR/TN
Z421
12
BK/BR
R
H
TO
C300
(8W-60-5)
TO
C300
(8W-60-5)
2
1
DRIVER
POWER
WINDOW
MOTOR
M
S371
(8W-15-15)
Z421
12
BK/BR
S343
(8W-15-15)
Z821
12
BK/BR
2
C300
Z821
12
BK/BR
G300
(8W-15-19)

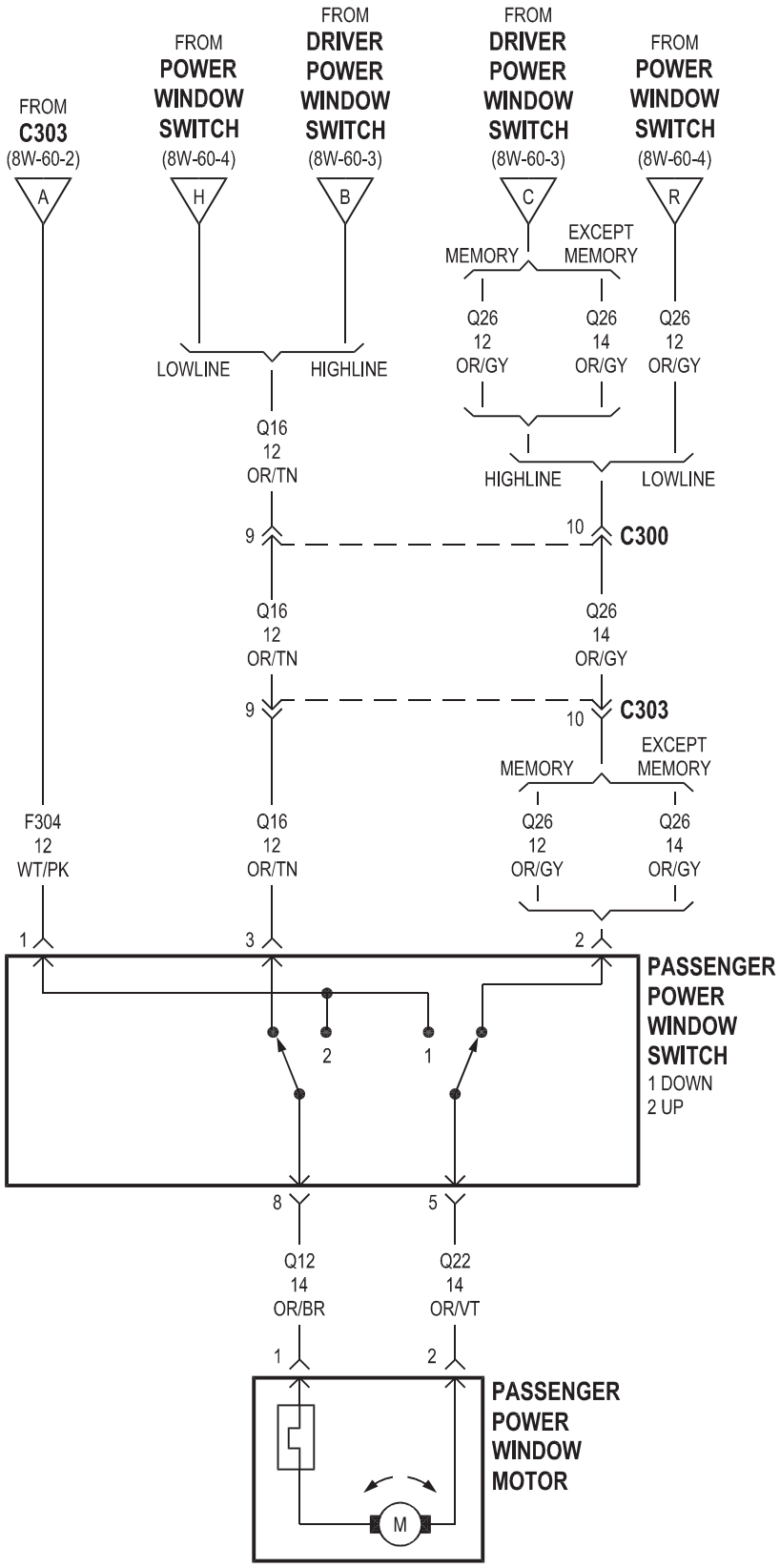
FROM
C303
(8W-60-2)
A
FROM
POWER
WINDOW
SWITCH
(8W-60-4)
H
FROM
DRIVER
POWER
WINDOW
SWITCH
(8W-60-3)
B
FROM
DRIVER
POWER
WINDOW
SWITCH
(8W-60-3)
C
FROM
POWER
WINDOW
SWITCH
(8W-60-4)
R
MEMORY
EXCEPT MEMORY
LOWLINE
HIGHLINE
Q26
12
OR/GY
Q26
14
OR/GY
Q16
12
OR/TN
HIGHLINE
LOWLINE
9
10
C300
C303
F304
12
WT/PK
1
3
2
PASSENGER
POWER
WINDOW
SWITCH
1 DOWN
2 UP
8
5
Q12
14
OR/BR
Q22
14
OR/VT
PASSENGER
POWER
WINDOW
MOTOR
M

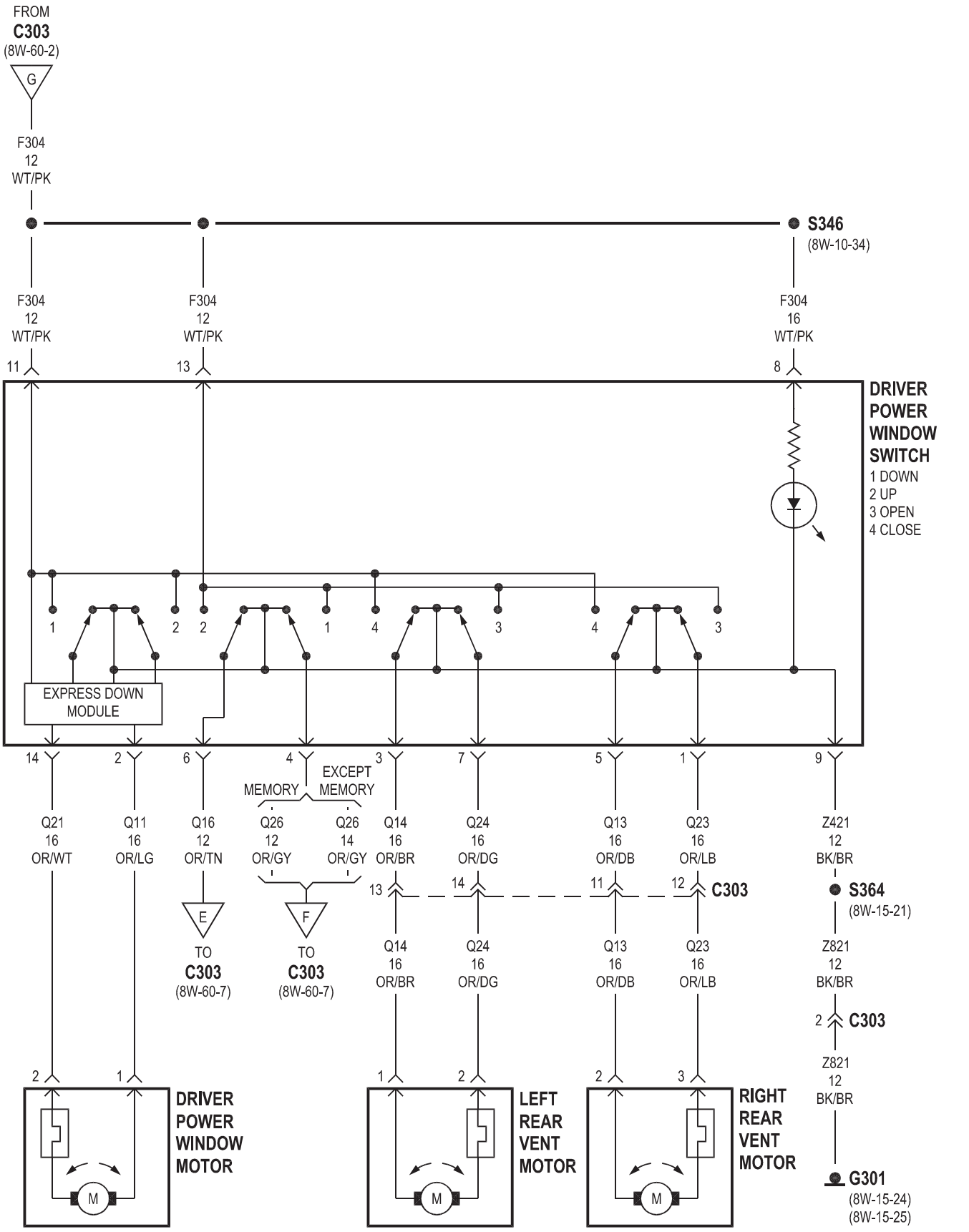
FROM
C303
(8W-60-2)
G
F304
12
WT/PK
S346
(8W-10-34)
F304
12
WT/PK
F304
12
WT/PK
F304
16
WT/PK
11
13
8
DRIVER
POWER
WINDOW
SWITCH
1 DOWN
2 UP
3 OPEN
4 CLOSE
1
2
2
1
4
3
4
3
EXPRESS DOWN
MODULE
14
2
6
4
3
7
5
1
9
MEMORY
EXCEPT
MEMORY
Q21
16
OR/WT
Q11
16
OR/LG
Q16
12
OR/TN
Q26
12
OR/GY
Q26
14
OR/GY
Q14
16
OR/BR
Q24
16
OR/DG
Q13
16
OR/DB
Q23
16
OR/LB
Z421
12
BK/BR
13
14
11
12
C303
S364
(8W-15-21)
E
F
TO
C303
(8W-60-7)
TO
C303
(8W-60-7)
Q14
16
OR/BR
Q24
16
OR/DG
Q13
16
OR/DB
Q23
16
OR/LB
Z821
12
BK/BR
2
C303
Z821
12
BK/BR
2
1
1
2
2
3
DRIVER
POWER
WINDOW
MOTOR
LEFT
REAR
VENT
MOTOR
RIGHT
REAR
VENT
MOTOR
M
M
M
G301
(8W-15-24)
(8W-15-25)

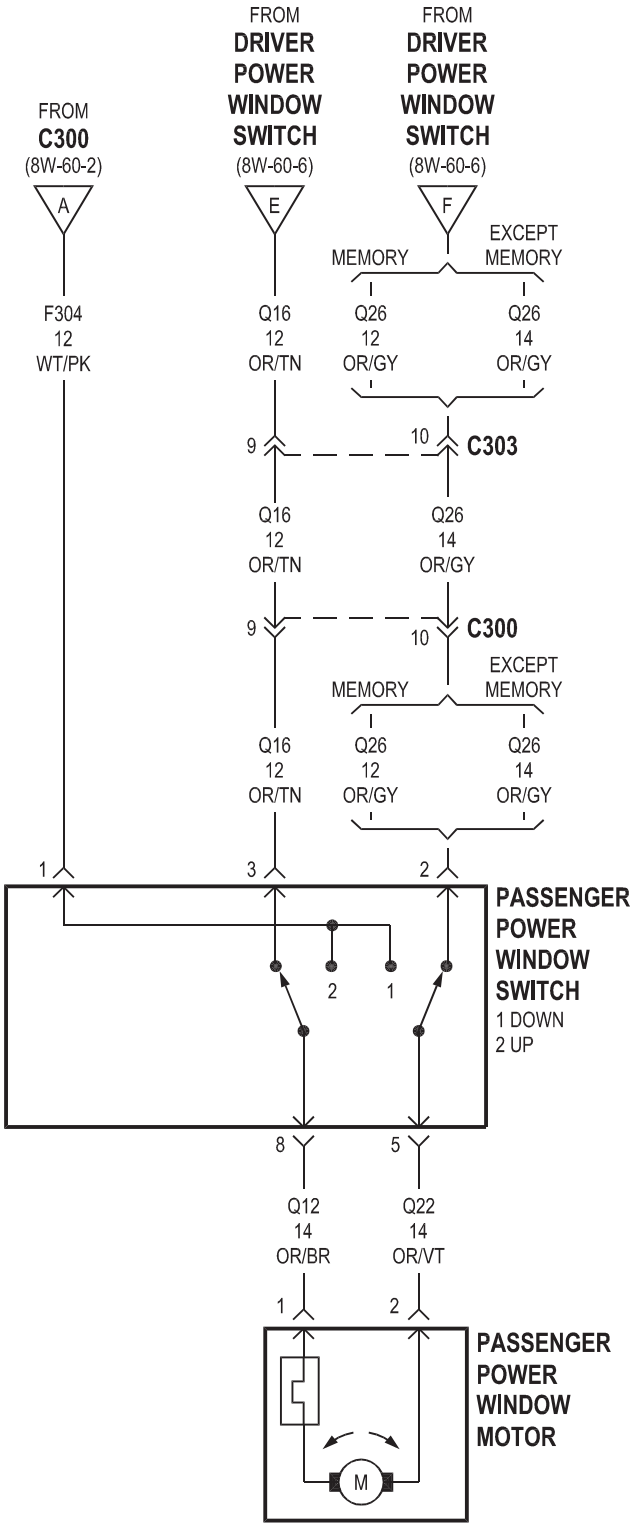
FROM
C300
(8W-60-2)
A
F304
12
WT/PK
FROM
DRIVER
POWER
WINDOW
SWITCH
(8W-60-6)
E
Q16
12
OR/TN
9
C303
10
Q16
12
OR/TN
9
C300
10
Q16
12
OR/TN
3
FROM
DRIVER
POWER
WINDOW
SWITCH
(8W-60-6)
F
MEMORY
EXCEPT
MEMORY
Q26
12
OR/GY
Q26
14
OR/GY
Q26
14
OR/GY
MEMORY
EXCEPT
MEMORY
Q26
12
OR/GY
Q26
14
OR/GY
1
2
2
1
PASSENGER
POWER
WINDOW
SWITCH
1 DOWN
2 UP
8
5
Q12
14
OR/BR
Q22
14
OR/VT
1
2
M
PASSENGER
POWER
WINDOW
MOTOR

8W-61 POWER DOOR LOCKS

Component	Page
Amplifier	8W-61-7
Body Control Module	8W-61-2, 3, 4, 5, 8, 11, 14, 15, 16, 17, 20
Driver Door Lock Switch	8W-61-2, 3
Front Control Module	8W-61-6, 17
Fuse 14	8W-61-5
Fuse 19	8W-61-2, 3, 4, 15
Fuse 31	8W-61-8
Fuse 32	8W-61-17
G200	8W-61-5
G300	8W-61-2, 3, 4, 8, 9, 10, 15
G301	8W-61-2, 3, 4, 11, 12, 13, 15
G302	8W-61-17
G303	8W-61-16, 19, 20
Integrated Power Module	8W-61-2, 3, 4, 5, 6, 8, 11, 15, 17
Left B-Pillar Switch	8W-61-8
Left Cinch/Release Motor	8W-61-9
Left Front Door Lock Motor/Ajar Switch	8W-61-4
Left Full Open Switch	8W-61-9
Left Sliding Door Control Module	8W-61-6, 8, 9, 10, 14
Left Sliding Door Latch Sensing Switch	8W-61-8, 10
Left Sliding Door Lock Motor	8W-61-14
Left Sliding Door Lock Motor/Ajar Switch	8W-61-15
Left Sliding Door Motor	8W-61-9
License Lamp	8W-61-19, 20
Liftgate Ajar Switch	8W-61-16
Liftgate Cinch/Release Motor	8W-61-19
Liftgate Left Pinch Sensor	8W-61-19
Liftgate Right Pinch Sensor	8W-61-19
Memory Seat/Mirror/Adjustable Pedals Module	8W-61-6
Overhead Console	8W-61-7
Passenger Door Lock Switch	8W-61-2, 3
Power Liftgate Module	8W-61-17, 18, 19, 20
Power Liftgate Motor	8W-61-18
Right B-Pillar Switch	8W-61-11
Right Cinch/Release Motor	8W-61-12
Right Front Door Lock Motor/Ajar Switch	8W-61-4
Right Full Open Switch	8W-61-12
Right Sliding Door Control Module	8W-61-7, 11, 12, 13, 14
Right Sliding Door Latch Sensing Switch	8W-61-11, 13
Right Sliding Door Lock Motor	8W-61-14
Right Sliding Door Lock Motor/Ajar Switch	8W-61-15
Right Sliding Door Motor	8W-61-12
Sentry Key Remote Entry Module	8W-61-5

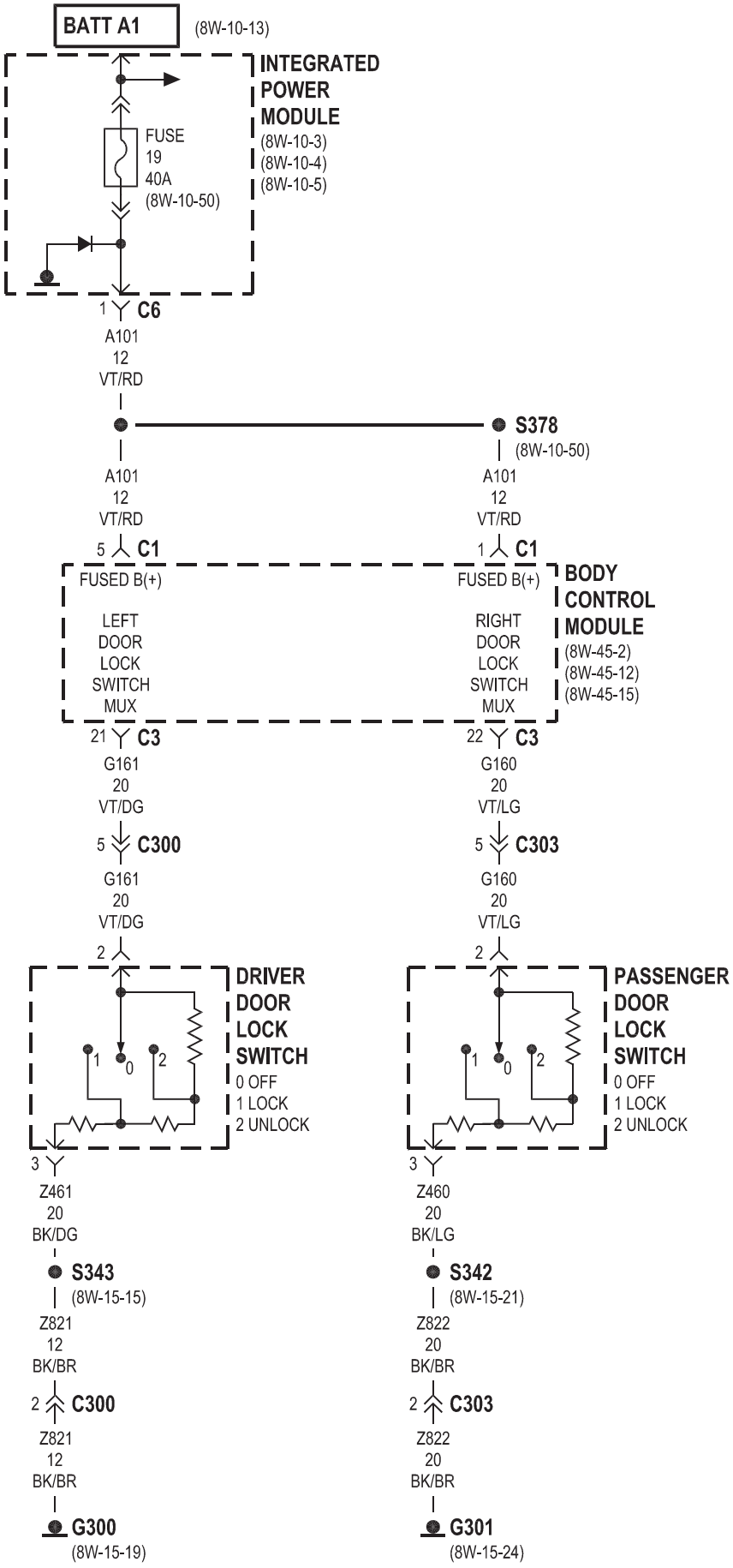
BATT A1
(8W-10-13)
INTEGRATED POWER MODULE
(8W-10-3)
(8W-10-4)
(8W-10-5)
FUSE 19 40A
(8W-10-50)
1 C6
A101 12 VT/RD
S378
(8W-10-50)
A101 12 VT/RD
5 C1
FUSED B(+)
LEFT DOOR LOCK SWITCH MUX
1 C1
FUSED B(+)
RIGHT DOOR LOCK SWITCH MUX
BODY CONTROL MODULE
(8W-45-2)
(8W-45-12)
(8W-45-15)
21 C3
G161 20 VT/DG
22 C3
G160 20 VT/LG
5 C300
G161 20 VT/DG
5 C303
G160 20 VT/LG
2
DRIVER DOOR LOCK SWITCH
0 OFF
1 LOCK
2 UNLOCK
PASSENGER DOOR LOCK SWITCH
0 OFF
1 LOCK
2 UNLOCK
3
Z461 20 BK/DG
Z460 20 BK/LG
S343
(8W-15-15)
S342
(8W-15-21)
Z821 12 BK/BR
Z822 20 BK/BR
2 C300
2 C303
Z821 12 BK/BR
Z822 20 BK/BR
G300
(8W-15-19)
G301
(8W-15-24)

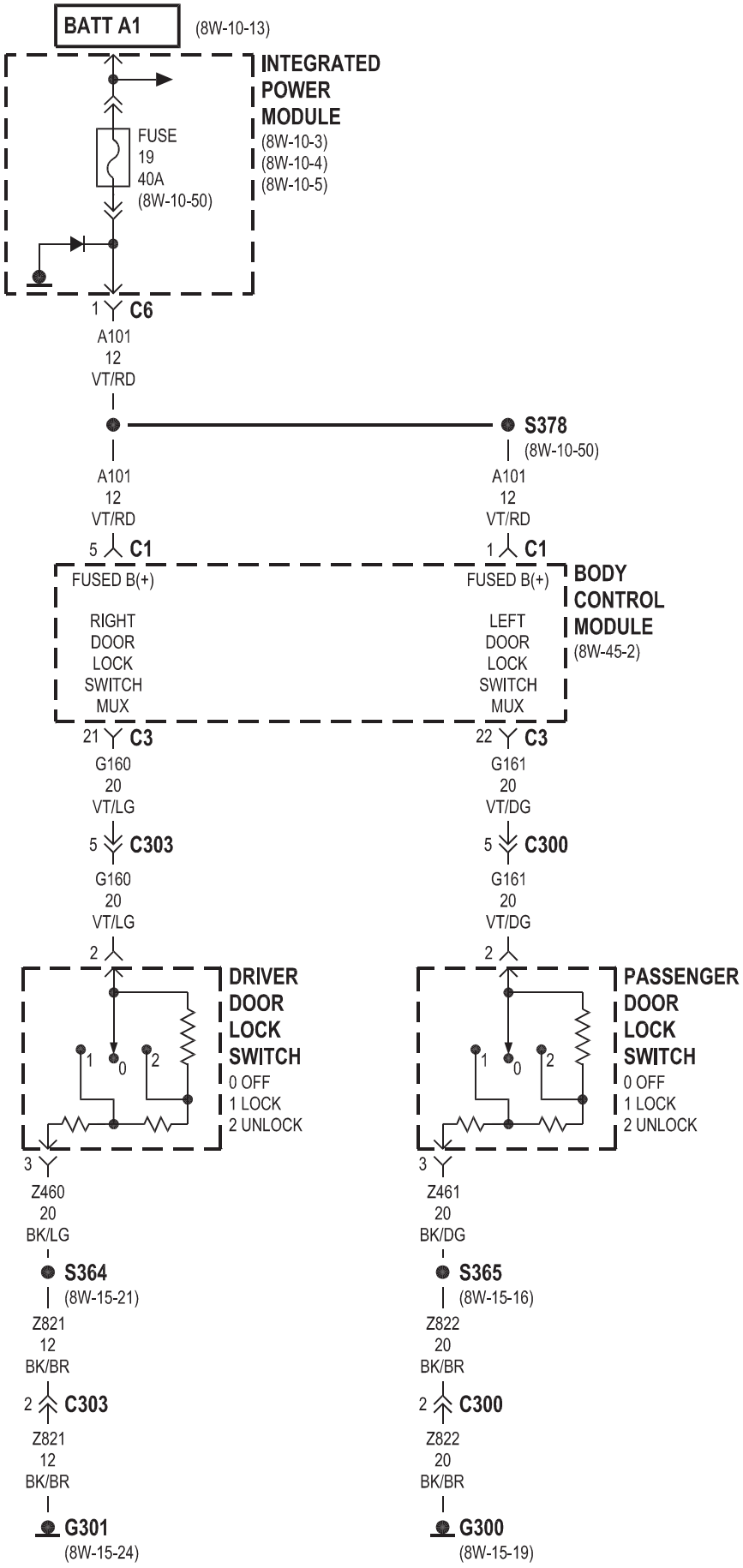
BATT A1
(8W-10-13)
INTEGRATED POWER MODULE
(8W-10-3)
(8W-10-4)
(8W-10-5)
FUSE 19 40A
(8W-10-50)
1 C6
A101 12 VT/RD
S378
(8W-10-50)
A101 12 VT/RD
5 C1
FUSED B(+)
RIGHT DOOR LOCK SWITCH MUX
A101 12 VT/RD
1 C1
FUSED B(+)
LEFT DOOR LOCK SWITCH MUX
BODY CONTROL MODULE
(8W-45-2)
21 C3
G160 20 VT/LG
22 C3
G161 20 VT/DG
5 C303
G160 20 VT/LG
5 C300
G161 20 VT/DG
2
DRIVER DOOR LOCK SWITCH
0 OFF
1 LOCK
2 UNLOCK
2
PASSENGER DOOR LOCK SWITCH
0 OFF
1 LOCK
2 UNLOCK
3
Z460 20 BK/LG
3
Z461 20 BK/DG
S364
(8W-15-21)
S365
(8W-15-16)
Z821 12 BK/BR
Z822 20 BK/BR
2 C303
2 C300
Z821 12 BK/BR
Z822 20 BK/BR
G301
(8W-15-24)
G300
(8W-15-19)

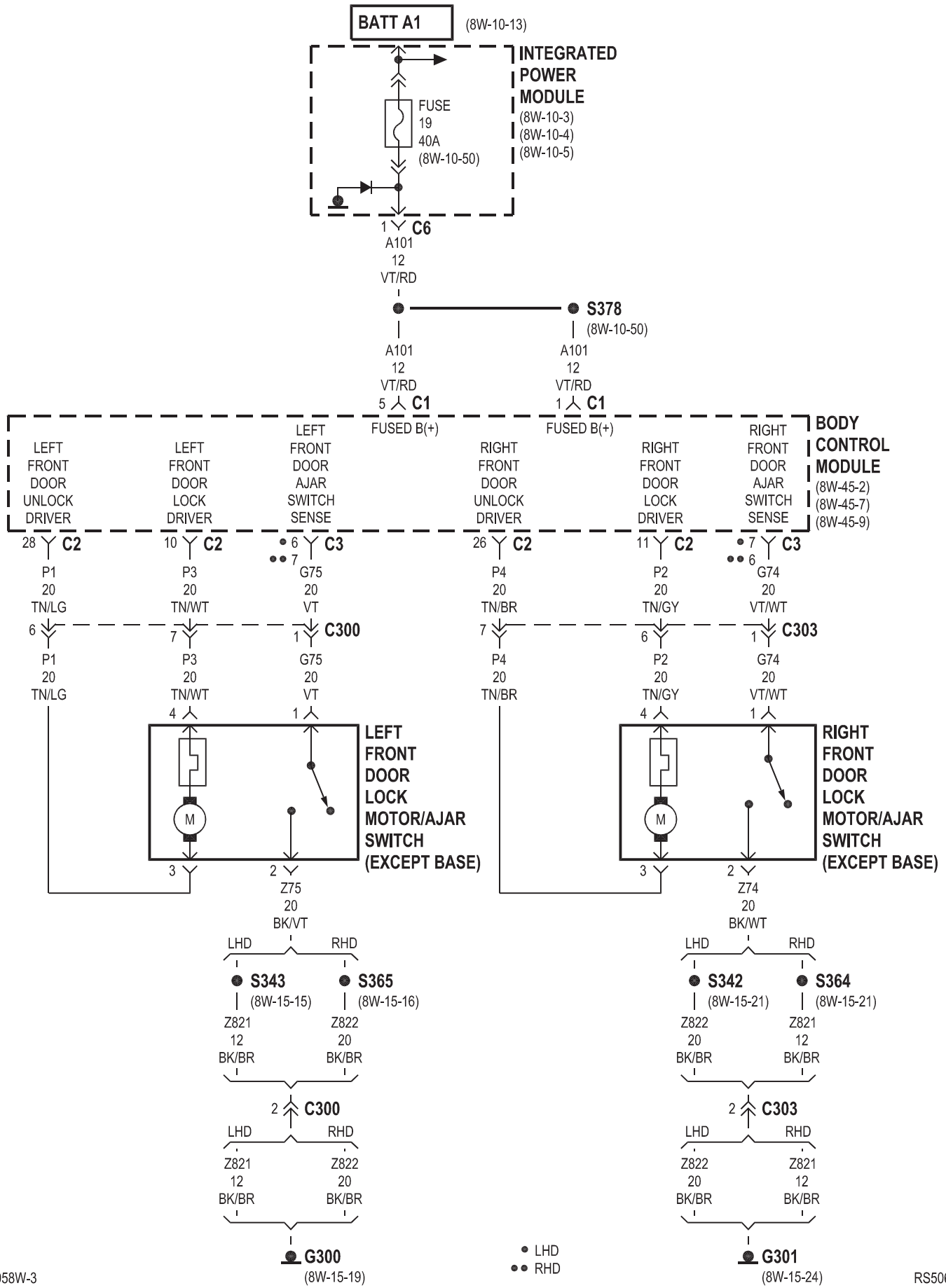
BATT A1
(8W-10-13)
INTEGRATED POWER MODULE
(8W-10-3)
(8W-10-4)
(8W-10-5)
FUSE 19 40A
(8W-10-50)
1 C6
A101 12 VT/RD
S378
(8W-10-50)
A101 12 VT/RD
5 C1
FUSED B(+)
A101 12 VT/RD
1 C1
FUSED B(+)
BODY CONTROL MODULE
(8W-45-2)
(8W-45-7)
(8W-45-9)
LEFT FRONT DOOR UNLOCK DRIVER
LEFT FRONT DOOR LOCK DRIVER
LEFT FRONT DOOR AJAR SWITCH SENSE
RIGHT FRONT DOOR UNLOCK DRIVER
RIGHT FRONT DOOR LOCK DRIVER
RIGHT FRONT DOOR AJAR SWITCH SENSE
28 C2
10 C2
6 7 C3
26 C2
11 C2
7 6 C3
P1 20 TN/LG
P3 20 TN/WT
G75 20 VT
P4 20 TN/BR
P2 20 TN/GY
G74 20 VT/WT
6 C300
7
1
7 C303
6
1
LEFT FRONT DOOR LOCK MOTOR/AJAR SWITCH (EXCEPT BASE)
RIGHT FRONT DOOR LOCK MOTOR/AJAR SWITCH (EXCEPT BASE)
M
4
1
3
2
Z75 20 BK/VT
Z74 20 BK/WT
LHD
RHD
S343
(8W-15-15)
S365
(8W-15-16)
S342
(8W-15-21)
S364
(8W-15-21)
Z821 12 BK/BR
Z822 20 BK/BR
2 C300
2 C303
G300
(8W-15-19)
G301
(8W-15-24)
LHD
RHD

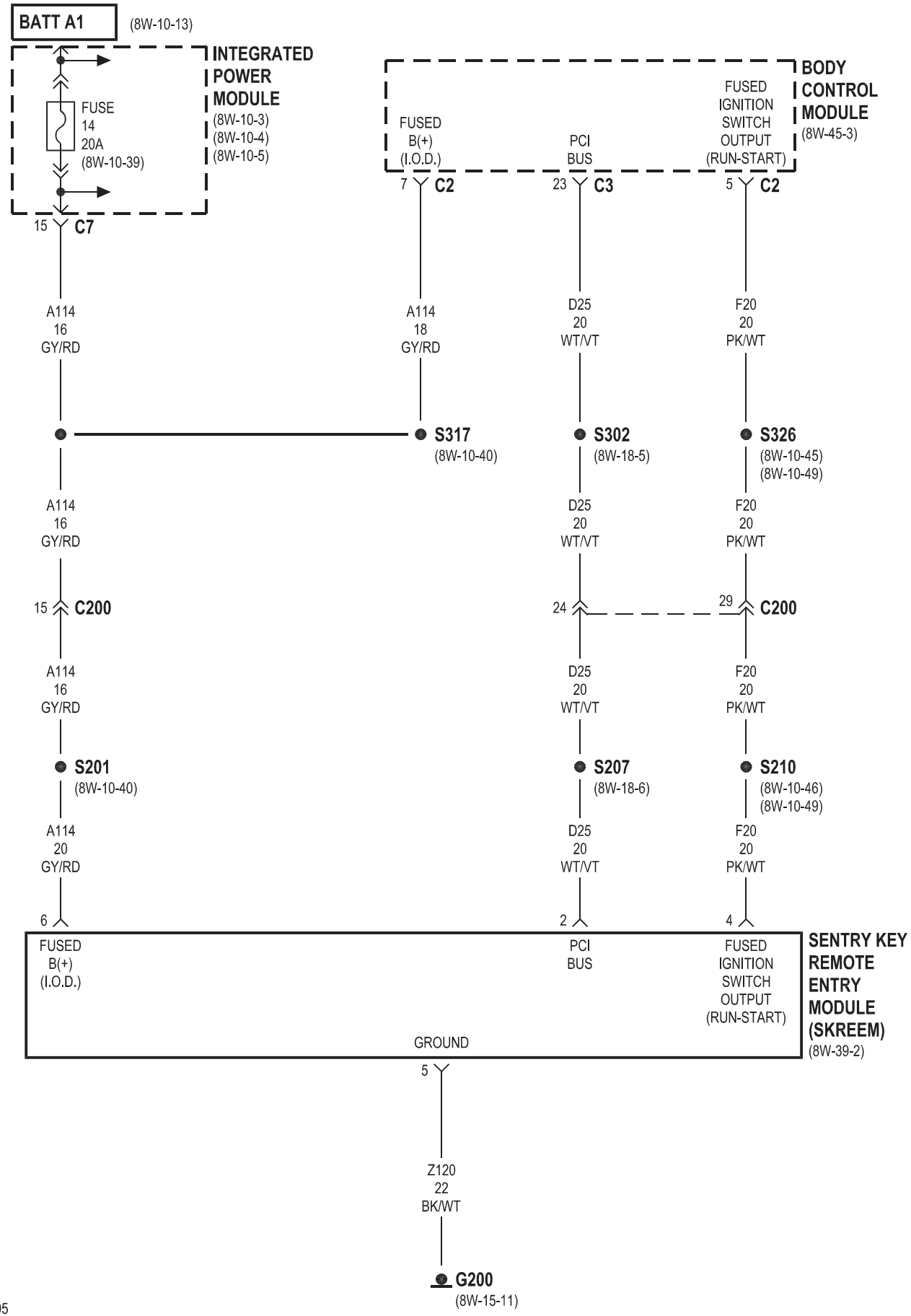
BATT A1
(8W-10-13)
INTEGRATED POWER MODULE
(8W-10-3)
(8W-10-4)
(8W-10-5)
FUSE 14 20A
(8W-10-39)
15 C7
BODY CONTROL MODULE
(8W-45-3)
FUSED B(+) (I.O.D.)
PCI BUS
FUSED IGNITION SWITCH OUTPUT (RUN-START)
7 C2
23 C3
5 C2
A114 16 GY/RD
A114 18 GY/RD
D25 20 WT/VT
F20 20 PK/WT
S317
(8W-10-40)
S302
(8W-18-5)
S326
(8W-10-45)
(8W-10-49)
A114 16 GY/RD
D25 20 WT/VT
F20 20 PK/WT
15 C200
24
29 C200
A114 16 GY/RD
D25 20 WT/VT
F20 20 PK/WT
S201
(8W-10-40)
S207
(8W-18-6)
S210
(8W-10-46)
(8W-10-49)
A114 20 GY/RD
D25 20 WT/VT
F20 20 PK/WT
6
2
4
FUSED B(+) (I.O.D.)
PCI BUS
FUSED IGNITION SWITCH OUTPUT (RUN-START)
SENTRY KEY REMOTE ENTRY MODULE (SKREEM)
(8W-39-2)
GROUND
5
Z120 22 BK/WT
G200
(8W-15-11)

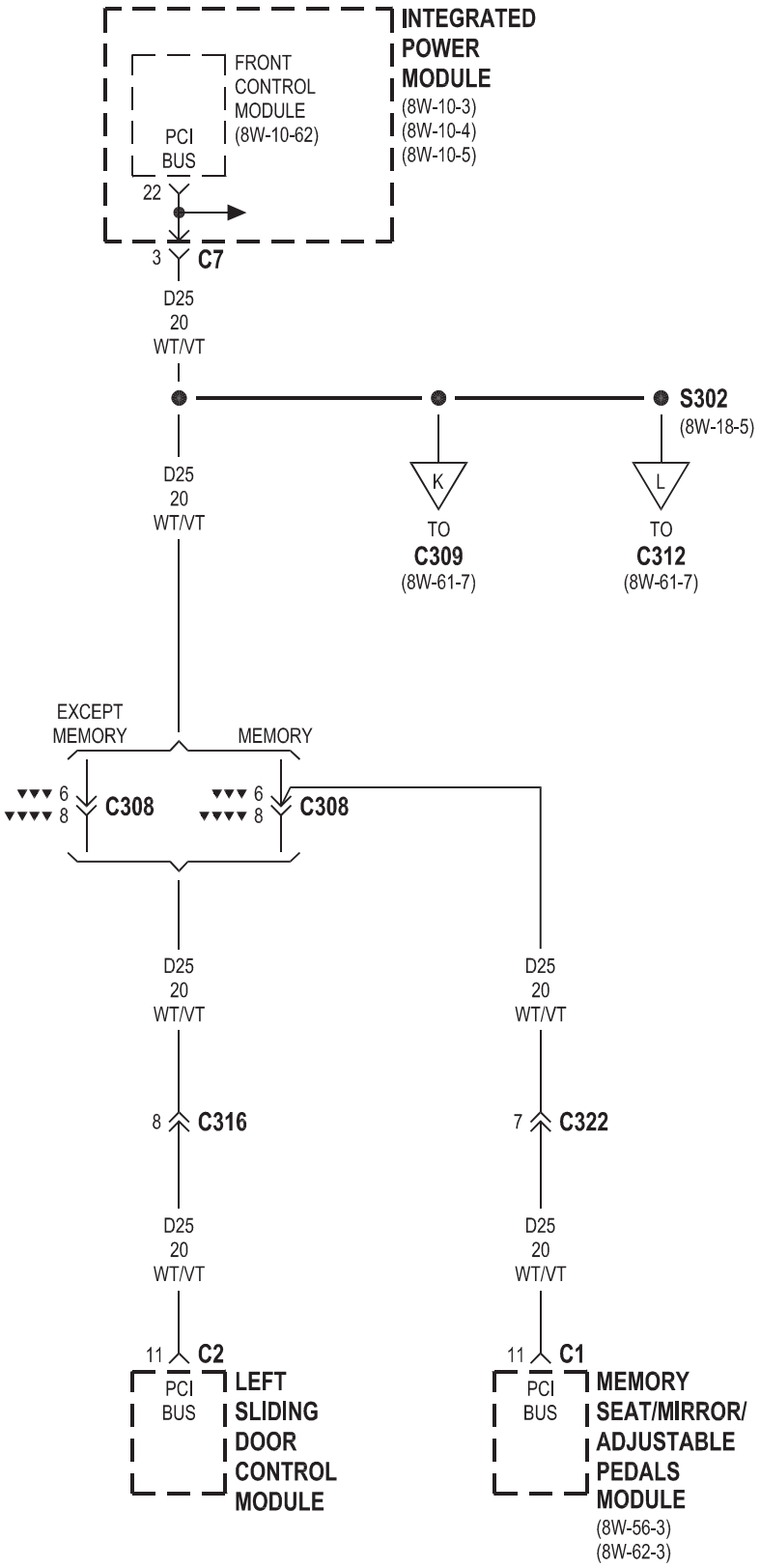
INTEGRATED POWER MODULE
(8W-10-3)
(8W-10-4)
(8W-10-5)
FRONT CONTROL MODULE (8W-10-62)
PCI BUS
22
3 C7
D25
20
WT/VT
S302
(8W-18-5)
K
TO
C309
(8W-61-7)
L
TO
C312
(8W-61-7)
EXCEPT MEMORY
MEMORY
▼▼▼ 6
▼▼▼▼ 8
C308
C308
8 C316
7 C322
11 C2
11 C1
PCI BUS
LEFT SLIDING DOOR CONTROL MODULE
MEMORY SEAT/MIRROR/ ADJUSTABLE PEDALS MODULE
(8W-56-3)
(8W-62-3)
▼▼▼ SIDE AIRBAG
▼▼▼▼ EXCEPT SIDE AIRBAG

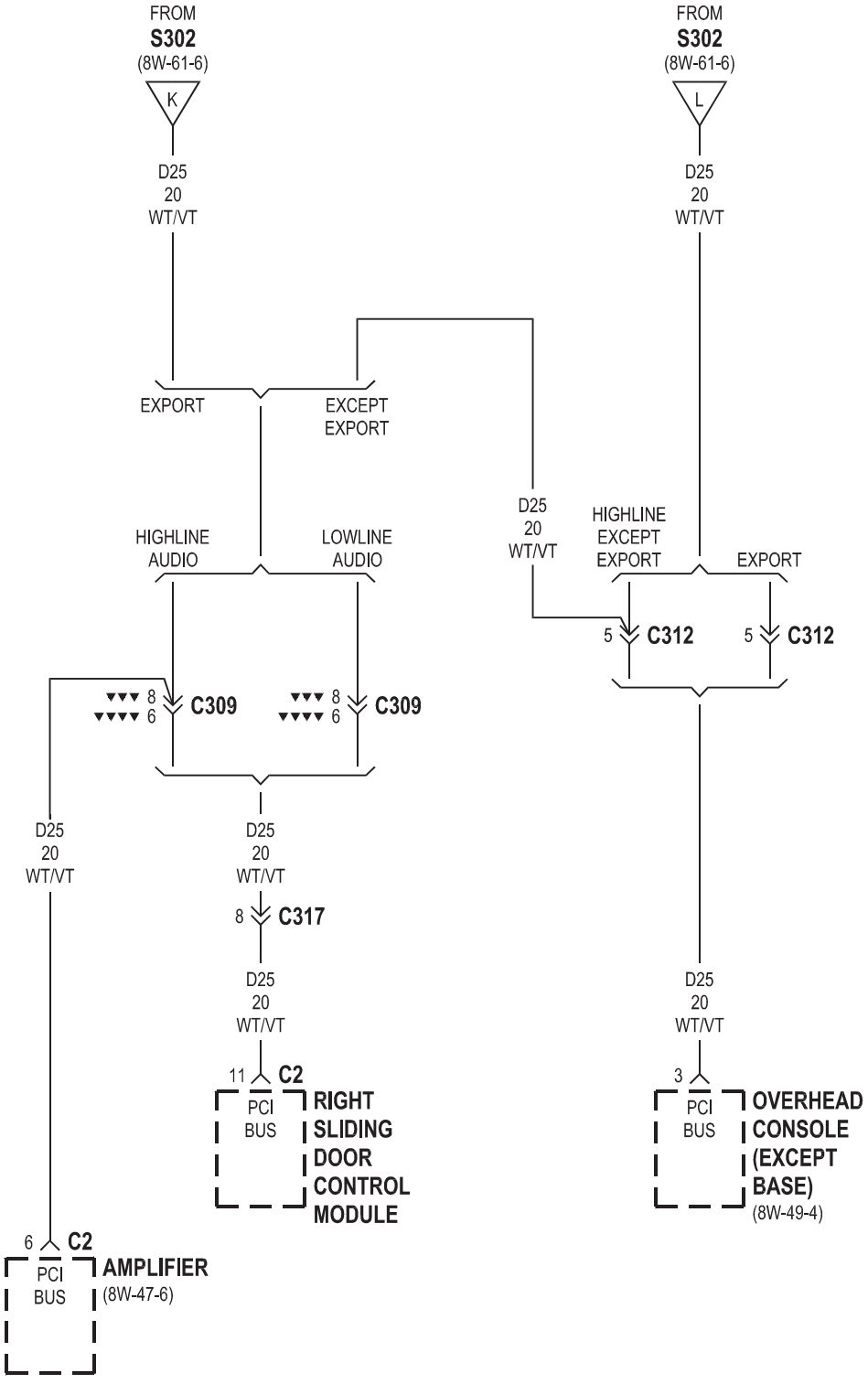

▼▼▼ SIDE AIRBAG
▼▼▼▼ EXCEPT SIDE AIRBAG

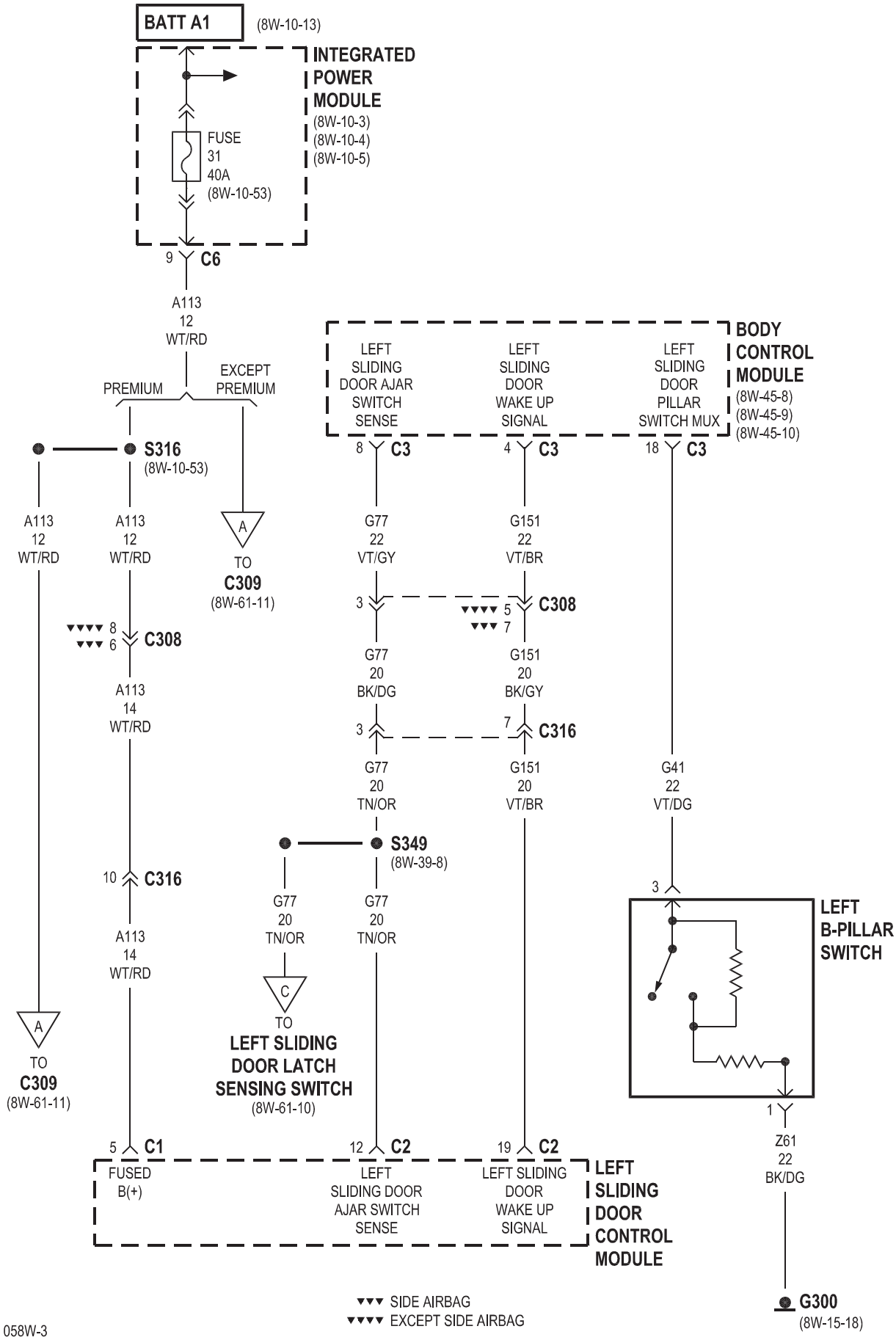
BATT A1
(8W-10-13)
INTEGRATED POWER MODULE
(8W-10-3)
(8W-10-4)
(8W-10-5)
FUSE 31 40A
(8W-10-53)
9 C6
A113 12 WT/RD
PREMIUM
EXCEPT PREMIUM
S316
(8W-10-53)
A113 12 WT/RD
A113 12 WT/RD
A
TO C309
(8W-61-11)
8 6 C308
A113 14 WT/RD
10 C316
A113 14 WT/RD
A
TO C309
(8W-61-11)
BODY CONTROL MODULE
(8W-45-8)
(8W-45-9)
(8W-45-10)
LEFT SLIDING DOOR AJAR SWITCH SENSE
LEFT SLIDING DOOR WAKE UP SIGNAL
LEFT SLIDING DOOR PILLAR SWITCH MUX
8 C3
4 C3
18 C3
G77 22 VT/GY
G151 22 VT/BR
3 5 7 C308
G77 20 BK/DG
G151 20 BK/GY
3 7 C316
G77 20 TN/OR
G151 20 VT/BR
G41 22 VT/DG
S349
(8W-39-8)
G77 20 TN/OR
G77 20 TN/OR
C
TO LEFT SLIDING DOOR LATCH SENSING SWITCH
(8W-61-10)
3
LEFT B-PILLAR SWITCH
1
Z61 22 BK/DG
5 C1
12 C2
19 C2
FUSED B(+)
LEFT SLIDING DOOR AJAR SWITCH SENSE
LEFT SLIDING DOOR WAKE UP SIGNAL
LEFT SLIDING DOOR CONTROL MODULE
▼▼▼ SIDE AIRBAG
▼▼▼▼ EXCEPT SIDE AIRBAG
G300
(8W-15-18)

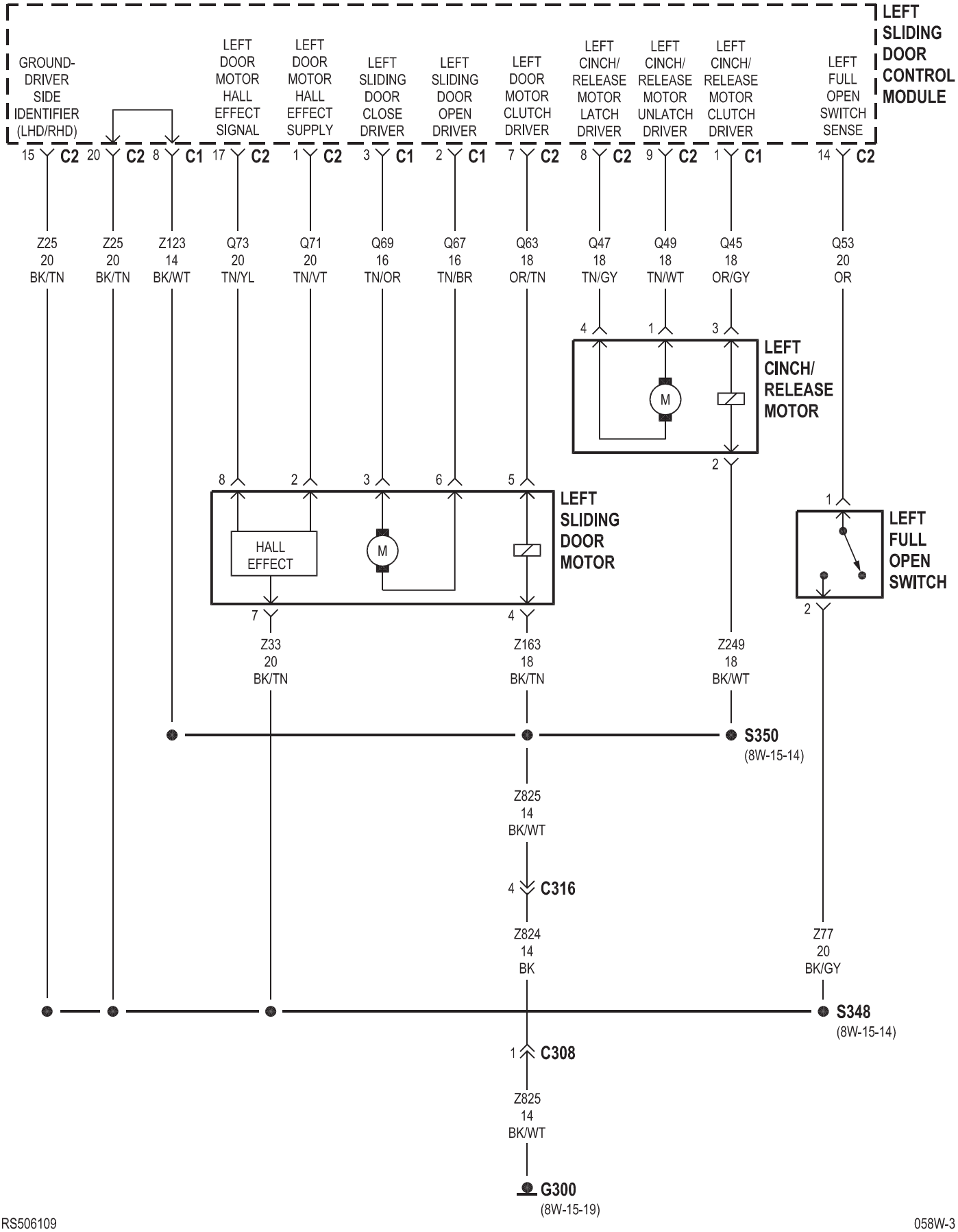
LEFT SLIDING DOOR CONTROL MODULE
GROUND- DRIVER SIDE IDENTIFIER (LHD/RHD)
LEFT DOOR MOTOR HALL EFFECT SIGNAL
LEFT DOOR MOTOR HALL EFFECT SUPPLY
LEFT SLIDING DOOR CLOSE DRIVER
LEFT SLIDING DOOR OPEN DRIVER
LEFT DOOR MOTOR CLUTCH DRIVER
LEFT CINCH/ RELEASE MOTOR LATCH DRIVER
LEFT CINCH/ RELEASE MOTOR UNLATCH DRIVER
LEFT CINCH/ RELEASE MOTOR CLUTCH DRIVER
LEFT FULL OPEN SWITCH SENSE
15 C2
20 C2
8 C1
17 C2
1 C2
3 C1
2 C1
7 C2
8 C2
9 C2
1 C1
14 C2
Z25 20 BK/TN
Z25 20 BK/TN
Z123 14 BK/WT
Q73 20 TN/YL
Q71 20 TN/VT
Q69 16 TN/OR
Q67 16 TN/BR
Q63 18 OR/TN
Q47 18 TN/GY
Q49 18 TN/WT
Q45 18 OR/GY
Q53 20 OR
LEFT CINCH/ RELEASE MOTOR
M
LEFT SLIDING DOOR MOTOR
HALL EFFECT
LEFT FULL OPEN SWITCH
Z33 20 BK/TN
Z163 18 BK/TN
Z249 18 BK/WT
S350
(8W-15-14)
Z825 14 BK/WT
C316
Z824 14 BK
Z77 20 BK/GY
S348
(8W-15-14)
C308
Z825 14 BK/WT
G300
(8W-15-19)

POWER SLIDING DOOR

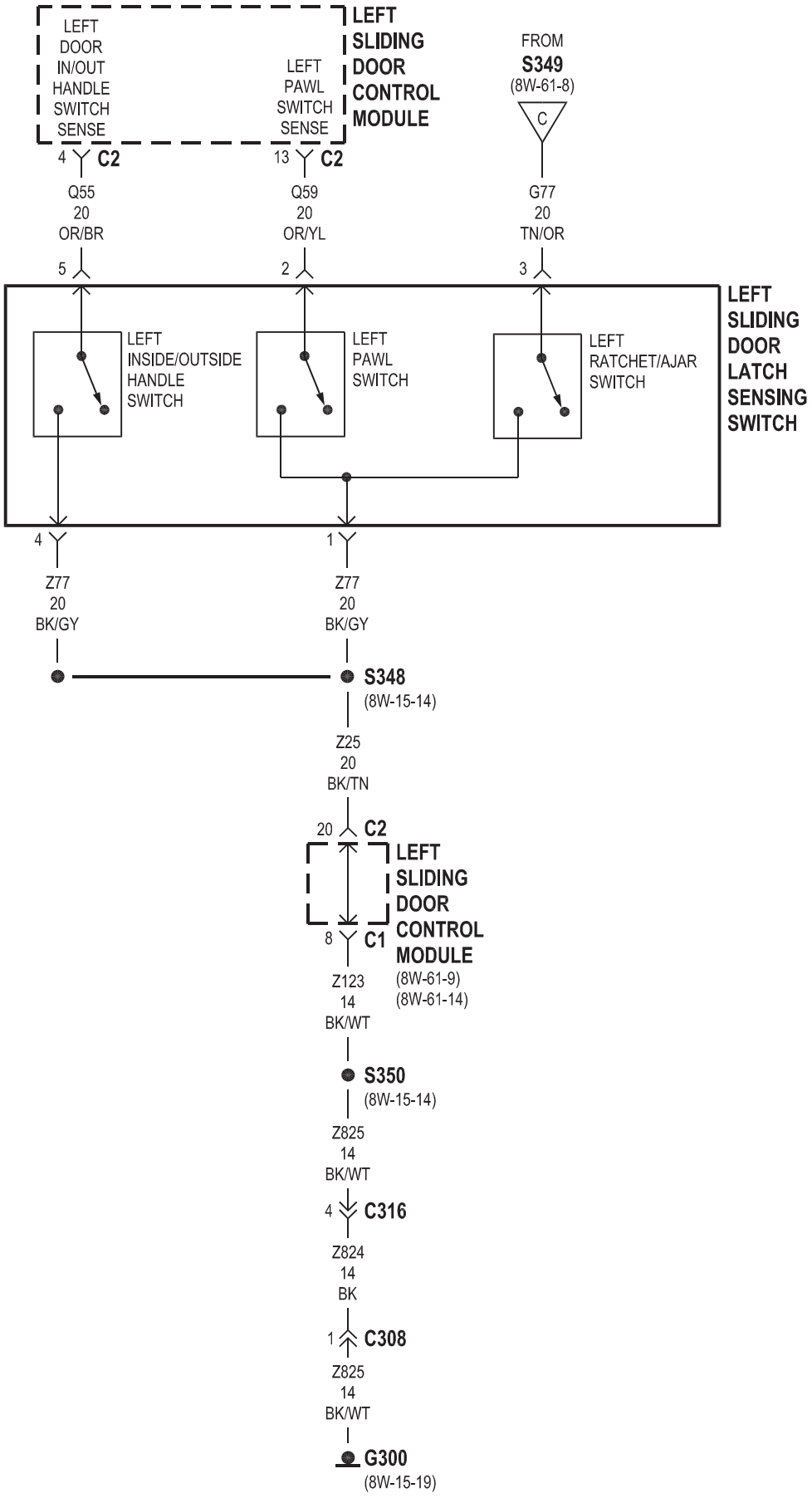

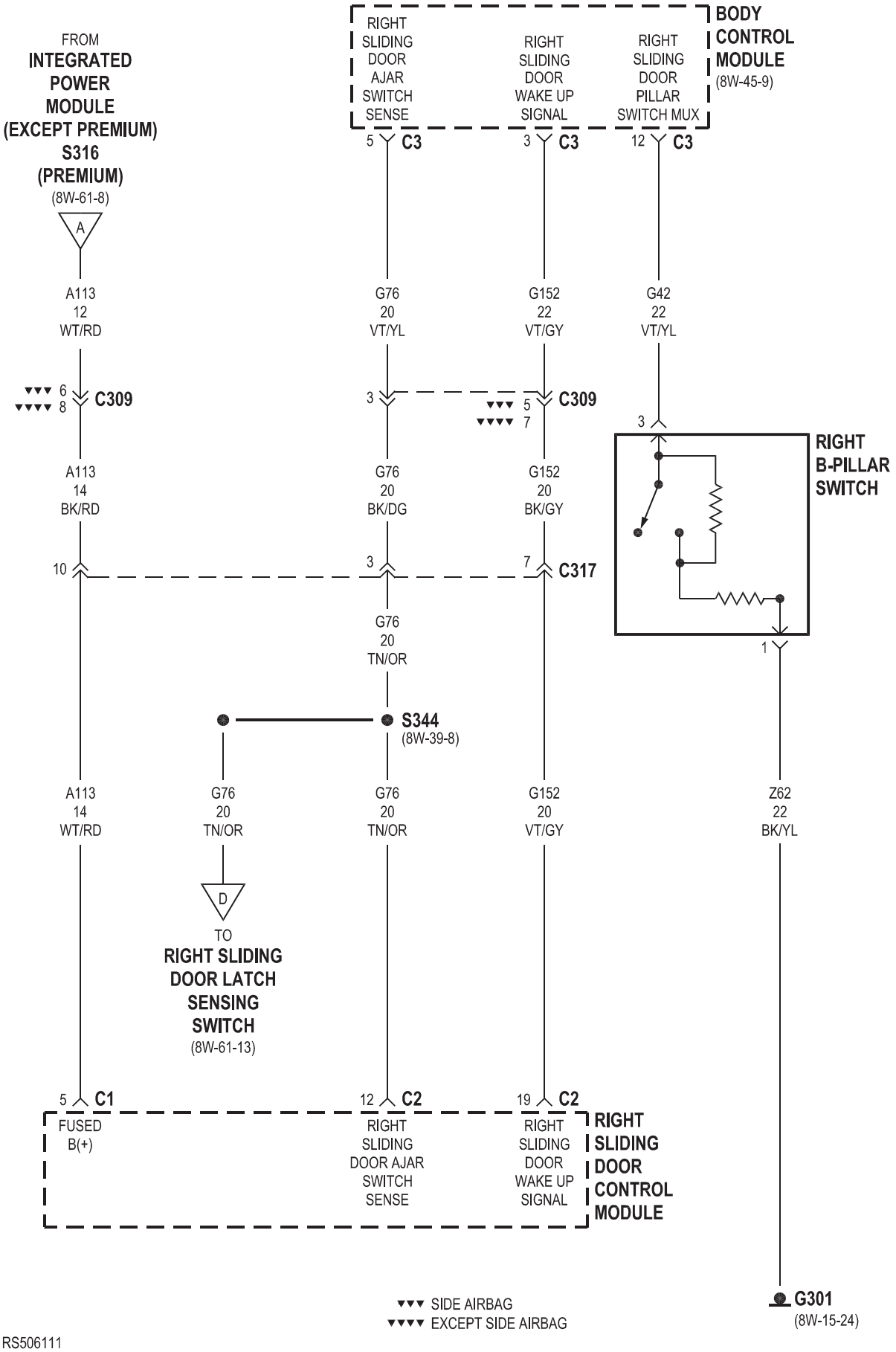
FROM
INTEGRATED POWER MODULE (EXCEPT PREMIUM) S316 (PREMIUM)
(8W-61-8)
A
A113
12
WT/RD
▼▼▼ 6
▼▼▼▼ 8
C309
A113
14
BK/RD
10
A113
14
WT/RD
5
C1
FUSED
B(+)
BODY CONTROL MODULE
(8W-45-9)
RIGHT SLIDING DOOR AJAR SWITCH SENSE
RIGHT SLIDING DOOR WAKE UP SIGNAL
RIGHT SLIDING DOOR PILLAR SWITCH MUX
5
C3
3
C3
12
C3
G76
20
VT/YL
3
G76
20
BK/DG
3
G76
20
TN/OR
G152
22
VT/GY
▼▼▼ 5
▼▼▼▼ 7
C309
G152
20
BK/GY
7
C317
G42
22
VT/YL
3
RIGHT B-PILLAR SWITCH
1
S344
(8W-39-8)
G76
20
TN/OR
G76
20
TN/OR
D
TO
RIGHT SLIDING DOOR LATCH SENSING SWITCH
(8W-61-13)
12
C2
RIGHT SLIDING DOOR AJAR SWITCH SENSE
G152
20
VT/GY
19
C2
RIGHT SLIDING DOOR WAKE UP SIGNAL
RIGHT SLIDING DOOR CONTROL MODULE
Z62
22
BK/YL
G301
(8W-15-24)
▼▼▼ SIDE AIRBAG
▼▼▼▼ EXCEPT SIDE AIRBAG

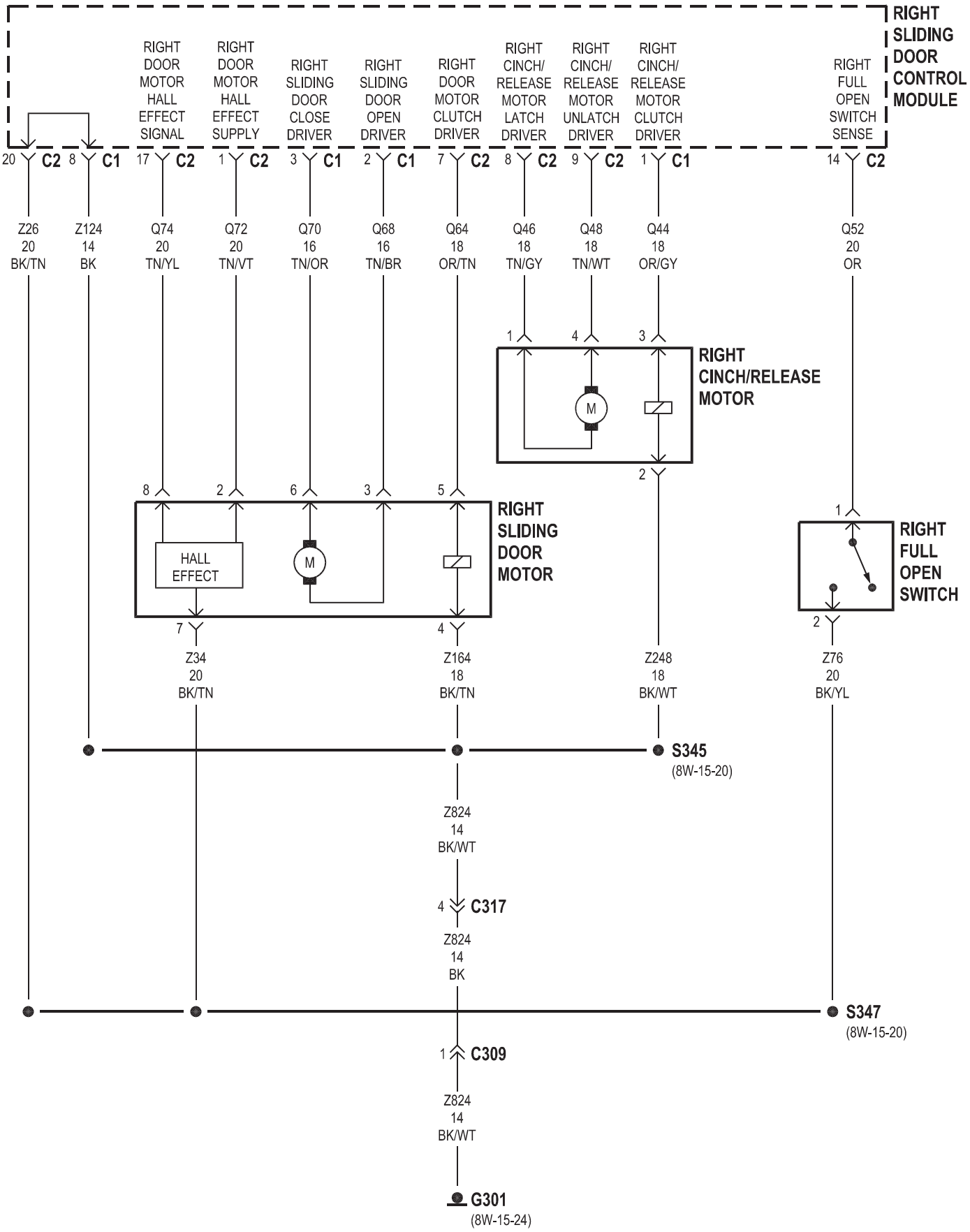
RIGHT SLIDING DOOR CONTROL MODULE
RIGHT DOOR MOTOR HALL EFFECT SIGNAL
RIGHT DOOR MOTOR HALL EFFECT SUPPLY
RIGHT SLIDING DOOR CLOSE DRIVER
RIGHT SLIDING DOOR OPEN DRIVER
RIGHT DOOR MOTOR CLUTCH DRIVER
RIGHT CINCH/ RELEASE MOTOR LATCH DRIVER
RIGHT CINCH/ RELEASE MOTOR UNLATCH DRIVER
RIGHT CINCH/ RELEASE MOTOR CLUTCH DRIVER
RIGHT FULL OPEN SWITCH SENSE
20 C2 8 C1 17 C2 1 C2 3 C1 2 C1 7 C2 8 C2 9 C2 1 C1 14 C2
Z26 20 BK/TN
Z124 14 BK
Q74 20 TN/YL
Q72 20 TN/VT
Q70 16 TN/OR
Q68 16 TN/BR
Q64 18 OR/TN
Q46 18 TN/GY
Q48 18 TN/WT
Q44 18 OR/GY
Q52 20 OR
RIGHT CINCH/RELEASE MOTOR
M
HALL EFFECT
RIGHT SLIDING DOOR MOTOR
RIGHT FULL OPEN SWITCH
Z34 20 BK/TN
Z164 18 BK/TN
Z248 18 BK/WT
Z76 20 BK/YL
S345
(8W-15-20)
Z824 14 BK/WT
4 C317
Z824 14 BK
S347
(8W-15-20)
1 C309
Z824 14 BK/WT
G301
(8W-15-24)

POWER SLIDING DOOR

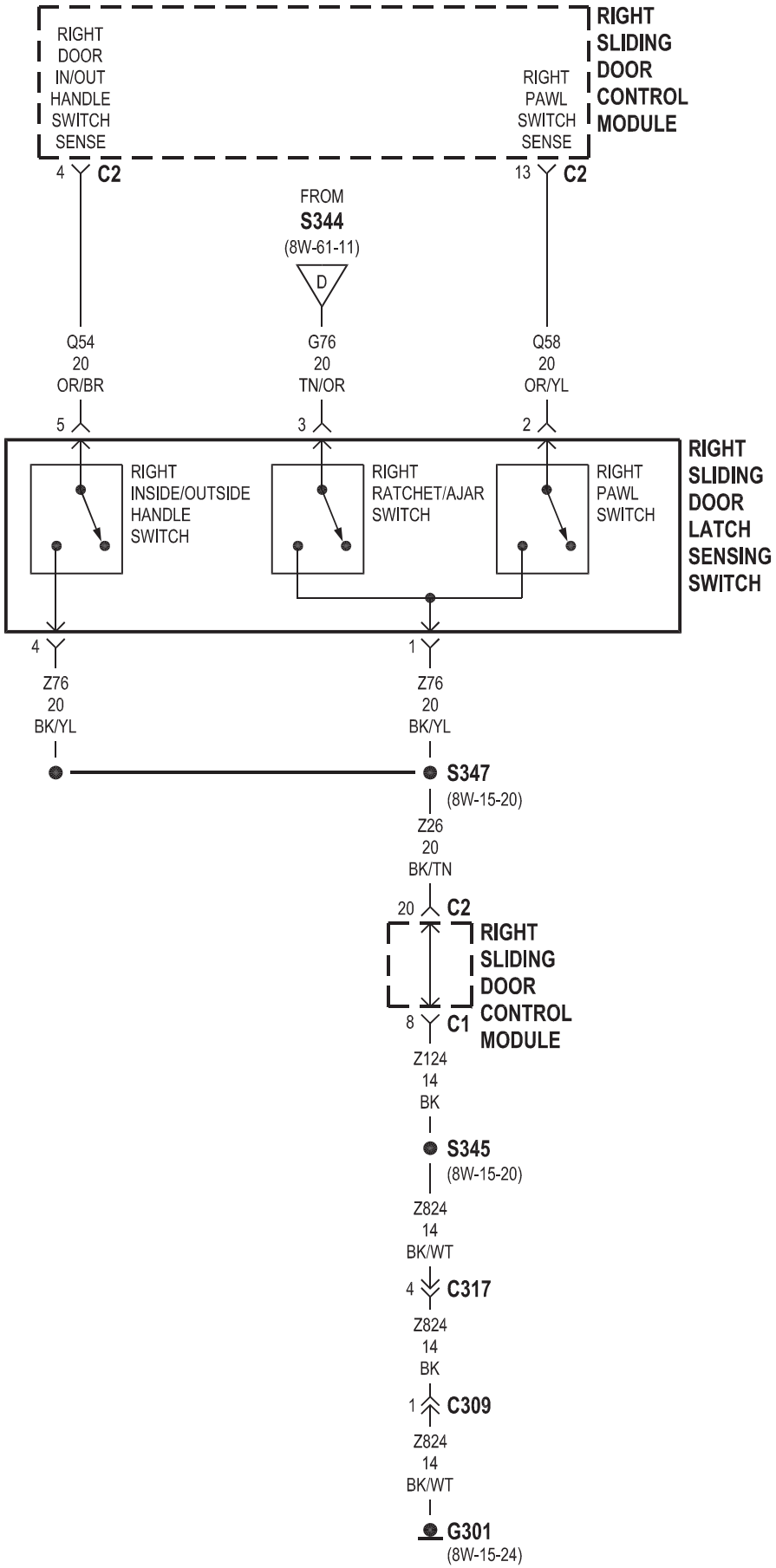

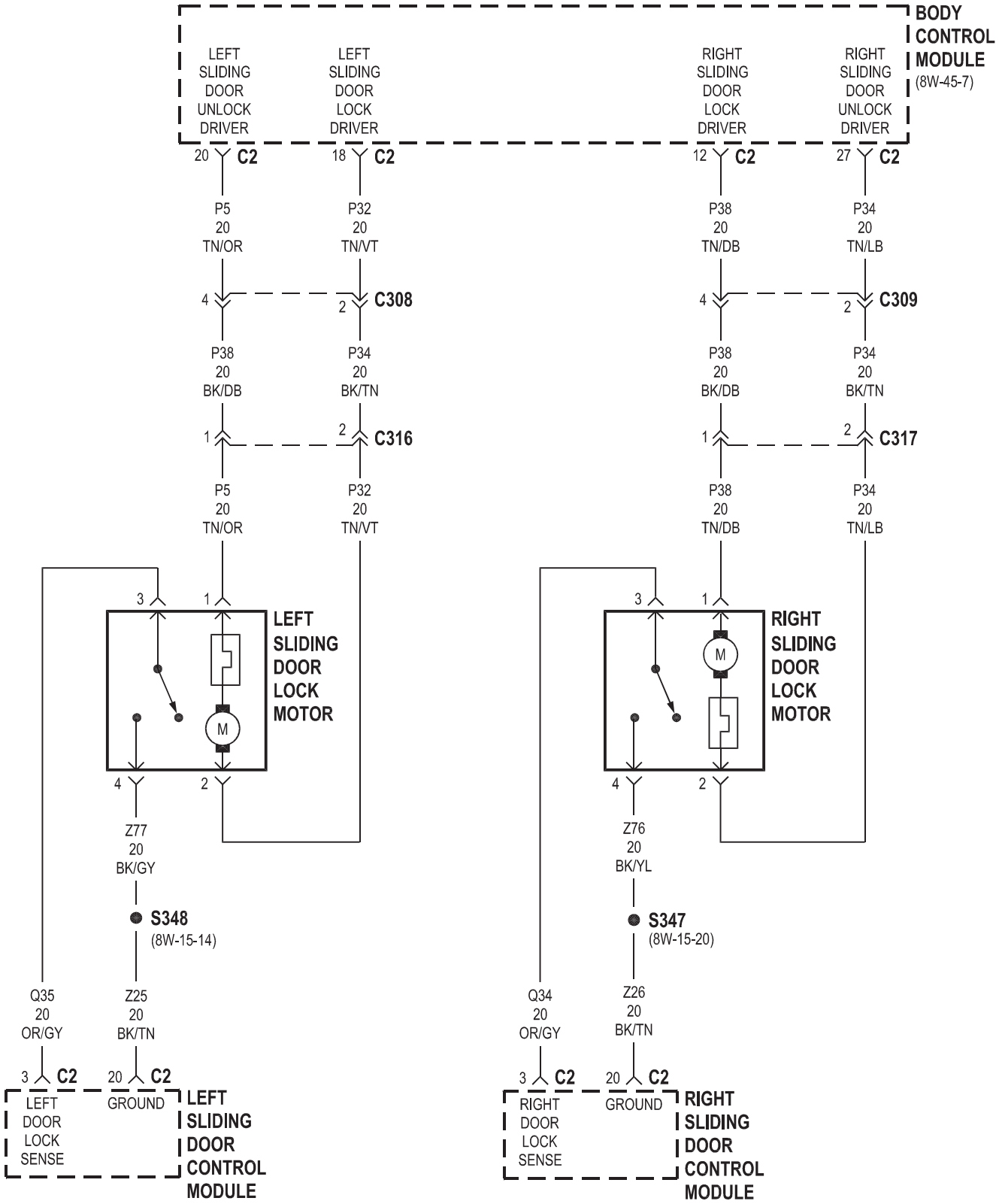
BODY CONTROL MODULE
(8W-45-7)
LEFT SLIDING DOOR UNLOCK DRIVER
LEFT SLIDING DOOR LOCK DRIVER
RIGHT SLIDING DOOR LOCK DRIVER
RIGHT SLIDING DOOR UNLOCK DRIVER
20 C2
18 C2
12 C2
27 C2
P5 20 TN/OR
P32 20 TN/VT
P38 20 TN/DB
P34 20 TN/LB
4
2 C308
4
2 C309
P38 20 BK/DB
P34 20 BK/TN
P38 20 BK/DB
P34 20 BK/TN
1
2 C316
1
2 C317
P5 20 TN/OR
P32 20 TN/VT
P38 20 TN/DB
P34 20 TN/LB
3
1
LEFT SLIDING DOOR LOCK MOTOR
M
4
2
Z77 20 BK/GY
S348
(8W-15-14)
Q35 20 OR/GY
Z25 20 BK/TN
3 C2
20 C2
LEFT DOOR LOCK SENSE
GROUND
LEFT SLIDING DOOR CONTROL MODULE
3
1
RIGHT SLIDING DOOR LOCK MOTOR
M
4
2
Z76 20 BK/YL
S347
(8W-15-20)
Q34 20 OR/GY
Z26 20 BK/TN
3 C2
20 C2
RIGHT DOOR LOCK SENSE
GROUND
RIGHT SLIDING DOOR CONTROL MODULE

POWER RELEASE

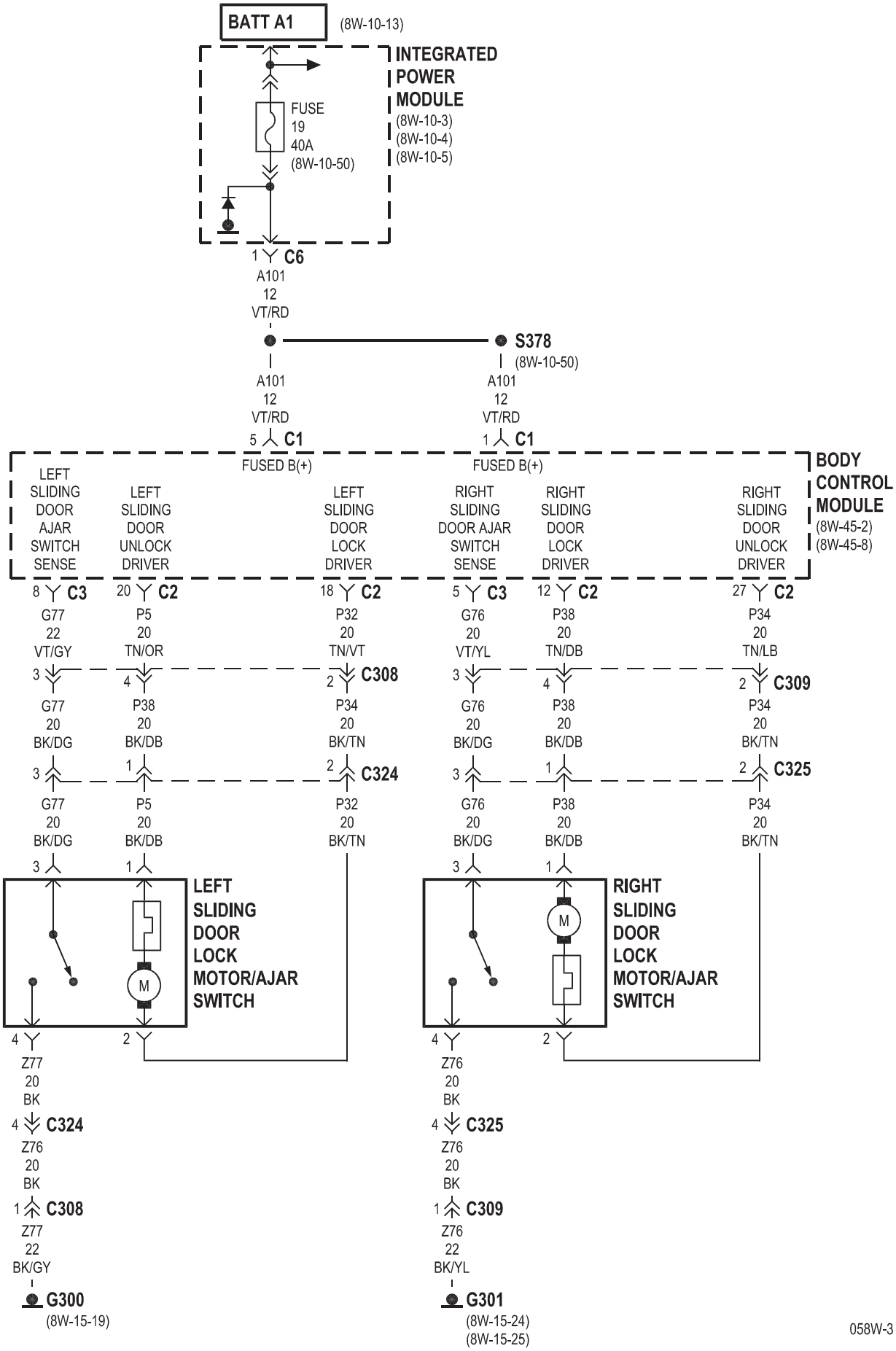

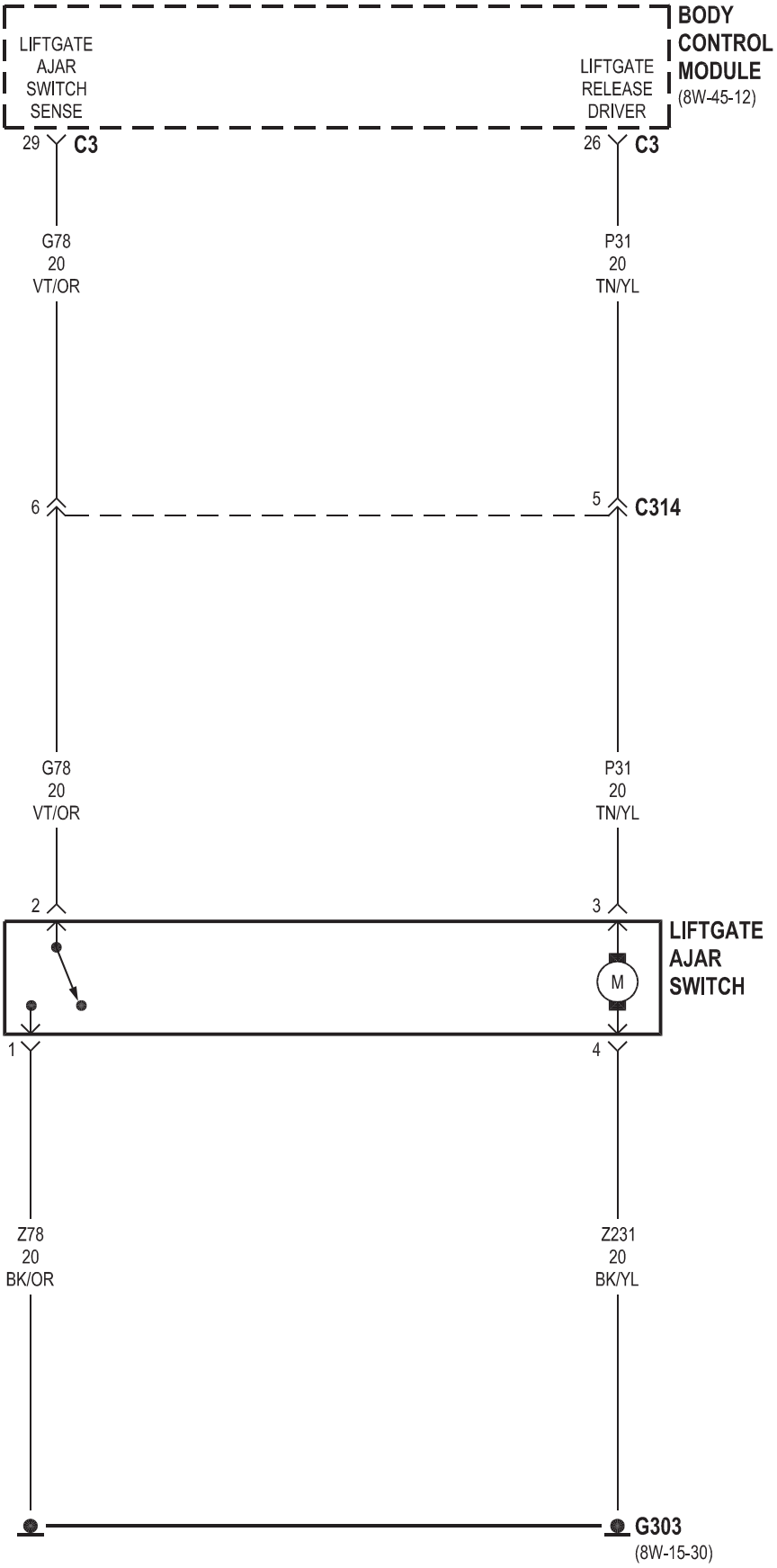
BODY CONTROL MODULE
(8W-45-12)
LIFTGATE AJAR SWITCH SENSE
LIFTGATE RELEASE DRIVER
29
C3
26
C3
G78
20
VT/OR
P31
20
TN/YL
6
5
C314
G78
20
VT/OR
P31
20
TN/YL
2
3
LIFTGATE AJAR SWITCH
M
1
4
Z78
20
BK/OR
Z231
20
BK/YL
G303
(8W-15-30)

POWER LIFTGATE

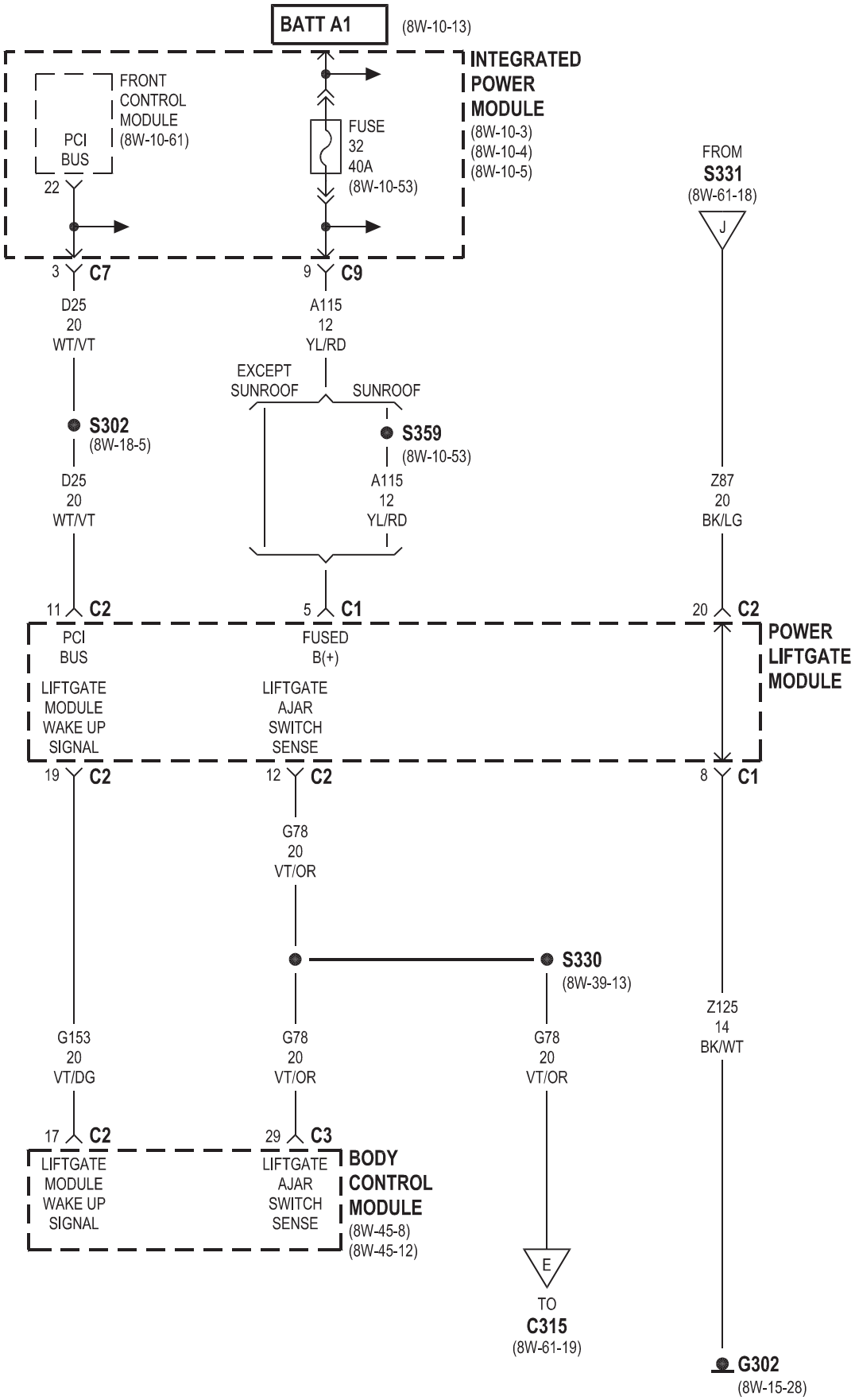

POWER LIFTGATE

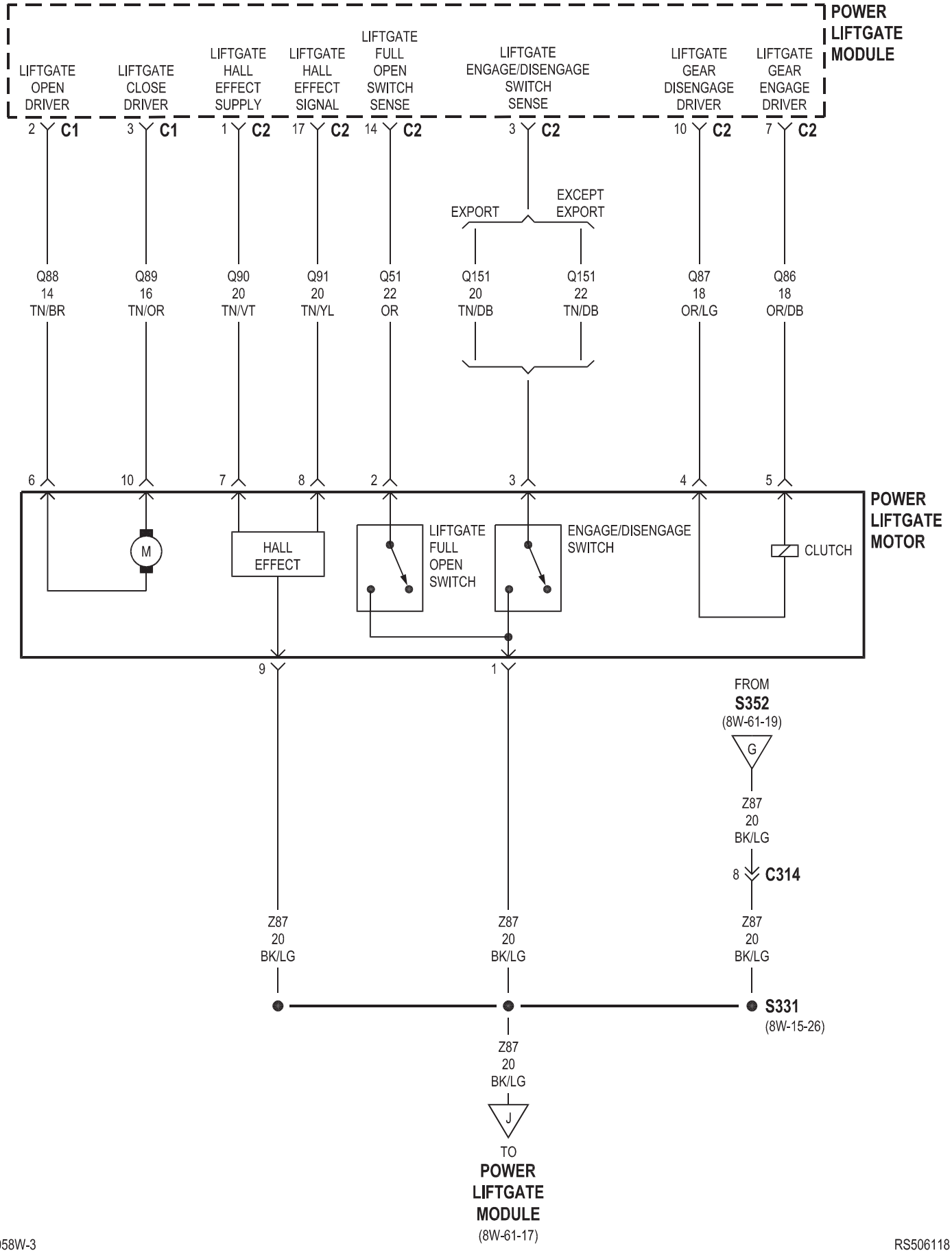

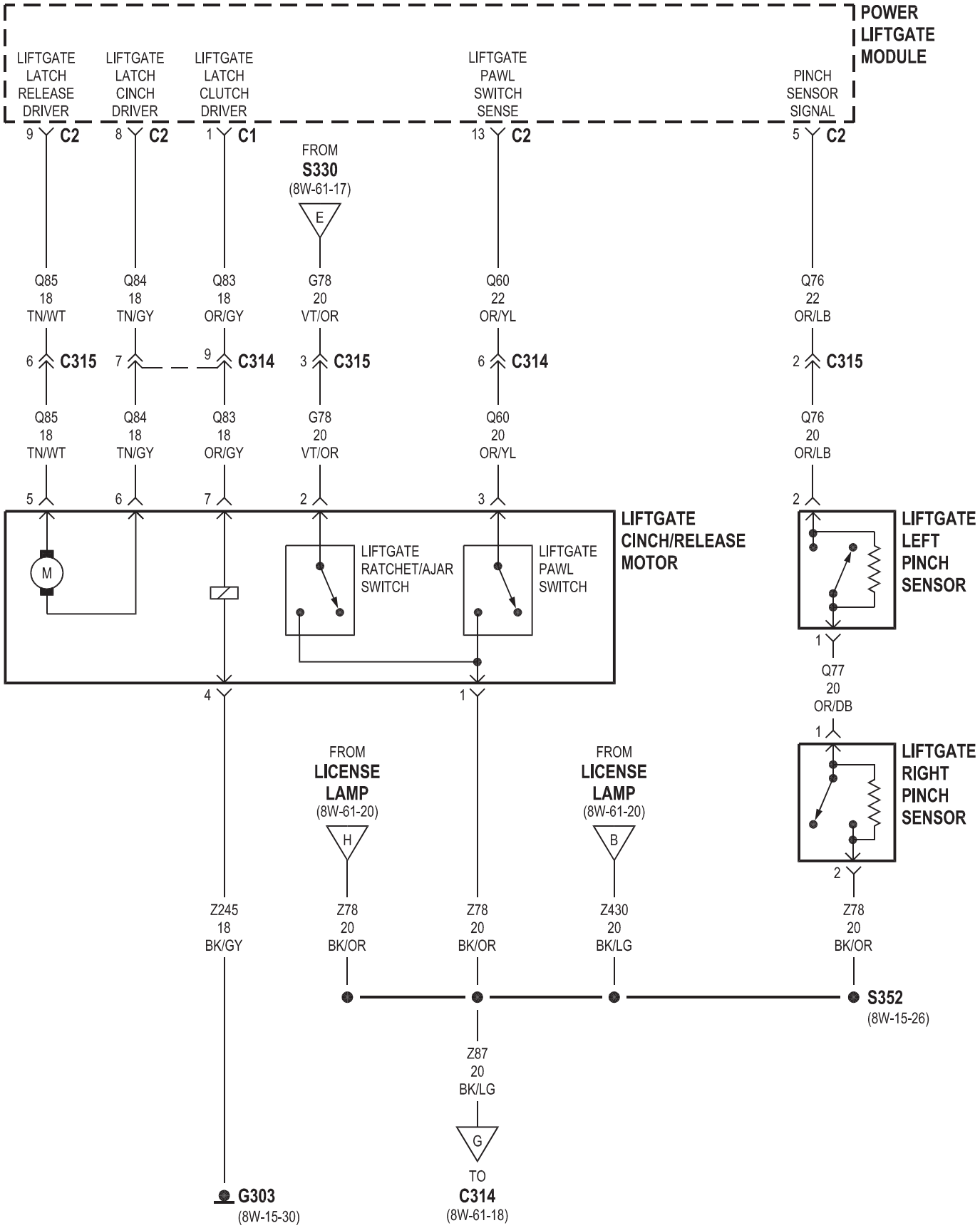
POWER LIFTGATE MODULE
LIFTGATE LATCH RELEASE DRIVER
LIFTGATE LATCH CINCH DRIVER
LIFTGATE LATCH CLUTCH DRIVER
LIFTGATE PAWL SWITCH SENSE
PINCH SENSOR SIGNAL
9 C2
8 C2
1 C1
13 C2
5 C2
FROM S330 (8W-61-17)
E
Q85 18 TN/WT
Q84 18 TN/GY
Q83 18 OR/GY
G78 20 VT/OR
Q60 22 OR/YL
Q76 22 OR/LB
6 C315
7
9 C314
3 C315
6 C314
2 C315
Q85 18 TN/WT
Q84 18 TN/GY
Q83 18 OR/GY
G78 20 VT/OR
Q60 20 OR/YL
Q76 20 OR/LB
5
6
7
2
3
2
M
LIFTGATE RATCHET/AJAR SWITCH
LIFTGATE PAWL SWITCH
LIFTGATE CINCH/RELEASE MOTOR
LIFTGATE LEFT PINCH SENSOR
1
Q77 20 OR/DB
1
LIFTGATE RIGHT PINCH SENSOR
2
4
1
FROM LICENSE LAMP (8W-61-20)
H
FROM LICENSE LAMP (8W-61-20)
B
Z245 18 BK/GY
Z78 20 BK/OR
Z78 20 BK/OR
Z430 20 BK/LG
Z78 20 BK/OR
S352 (8W-15-26)
Z87 20 BK/LG
G
TO C314 (8W-61-18)
G303 (8W-15-30)

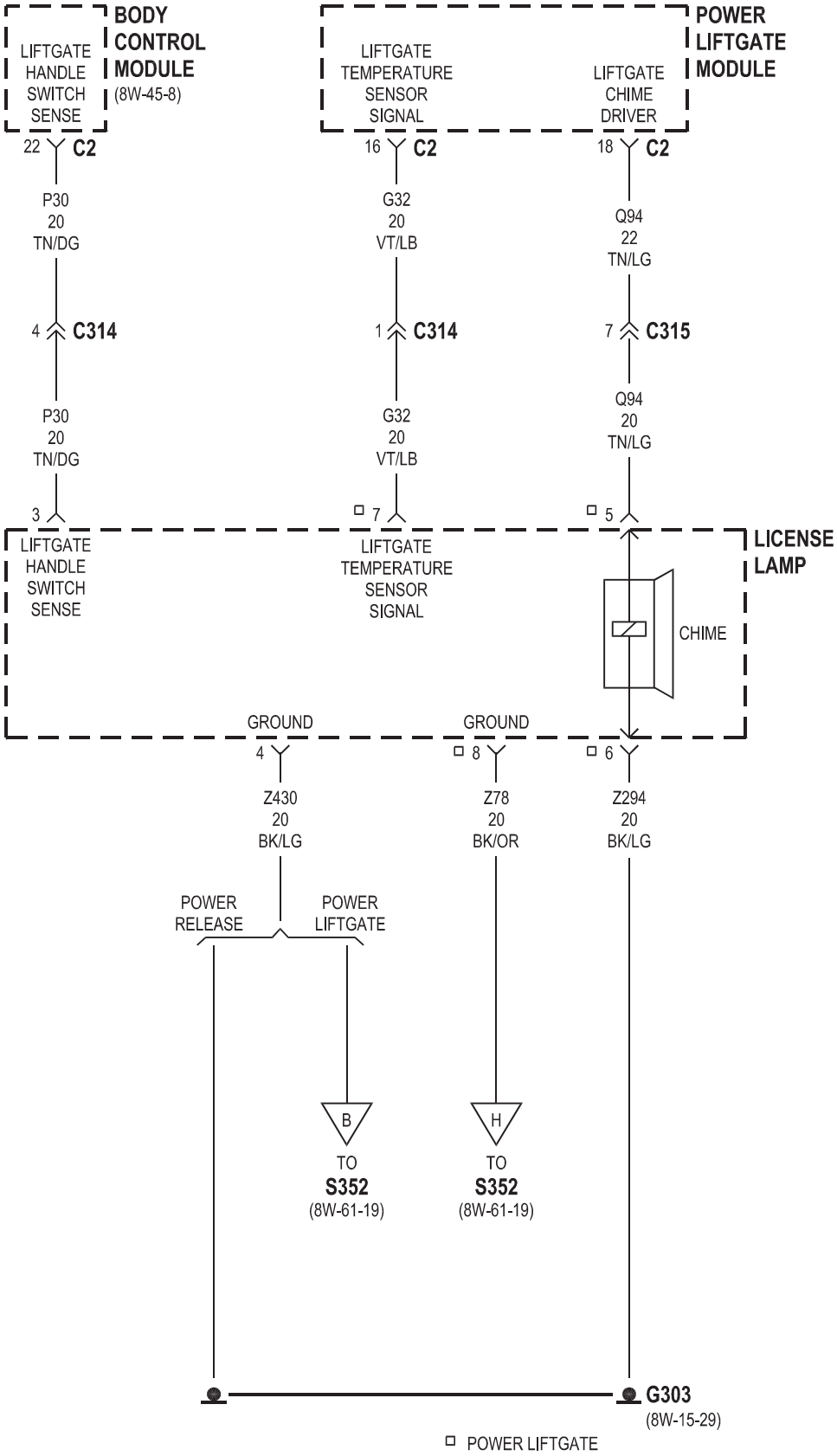
BODY CONTROL MODULE
(8W-45-8)
LIFTGATE HANDLE SWITCH SENSE
22 C2
POWER LIFTGATE MODULE
LIFTGATE TEMPERATURE SENSOR SIGNAL
16 C2
LIFTGATE CHIME DRIVER
18 C2
P30 20 TN/DG
4 C314
P30 20 TN/DG
3
G32 20 VT/LB
1 C314
G32 20 VT/LB
7
Q94 22 TN/LG
7 C315
Q94 20 TN/LG
5
LICENSE LAMP
LIFTGATE HANDLE SWITCH SENSE
LIFTGATE TEMPERATURE SENSOR SIGNAL
CHIME
GROUND
4
GROUND
8
6
Z430 20 BK/LG
Z78 20 BK/OR
Z294 20 BK/LG
POWER RELEASE
POWER LIFTGATE
B
H
TO S352
(8W-61-19)
TO S352
(8W-61-19)
G303
(8W-15-29)
POWER LIFTGATE

8W-62 POWER MIRRORS

Component	Page
Body Control Module	8W-62-2, 3, 9
Defogger Relay	8W-62-10
Front Control Module	8W-62-3
Fuse 18	8W-62-2, 4
Fuse 22	8W-62-3
G200	8W-62-2, 4, 10
G300	8W-62-3, 4
Integrated Power Module	8W-62-2, 3, 4, 9, 10
Left Power Mirror	8W-62-2, 4, 7, 8, 9, 10
Memory Seat/Mirror/Adjustable Pedals Module	8W-62-3, 6, 7, 8
Memory Set Switch	8W-62-3
Passenger Folding Mirror Relay	8W-62-2, 4, 9
Passenger Power Seat Switch	8W-62-3
Power Folding Mirror Switch	8W-62-2
Power Mirror Switch	8W-62-2, 4, 5, 6
Power Seat Circuit Breaker	8W-62-3
PTC 4	8W-62-10
Rear View Mirror	8W-62-8
Right Power Mirror	8W-62-2, 5, 7, 9, 10

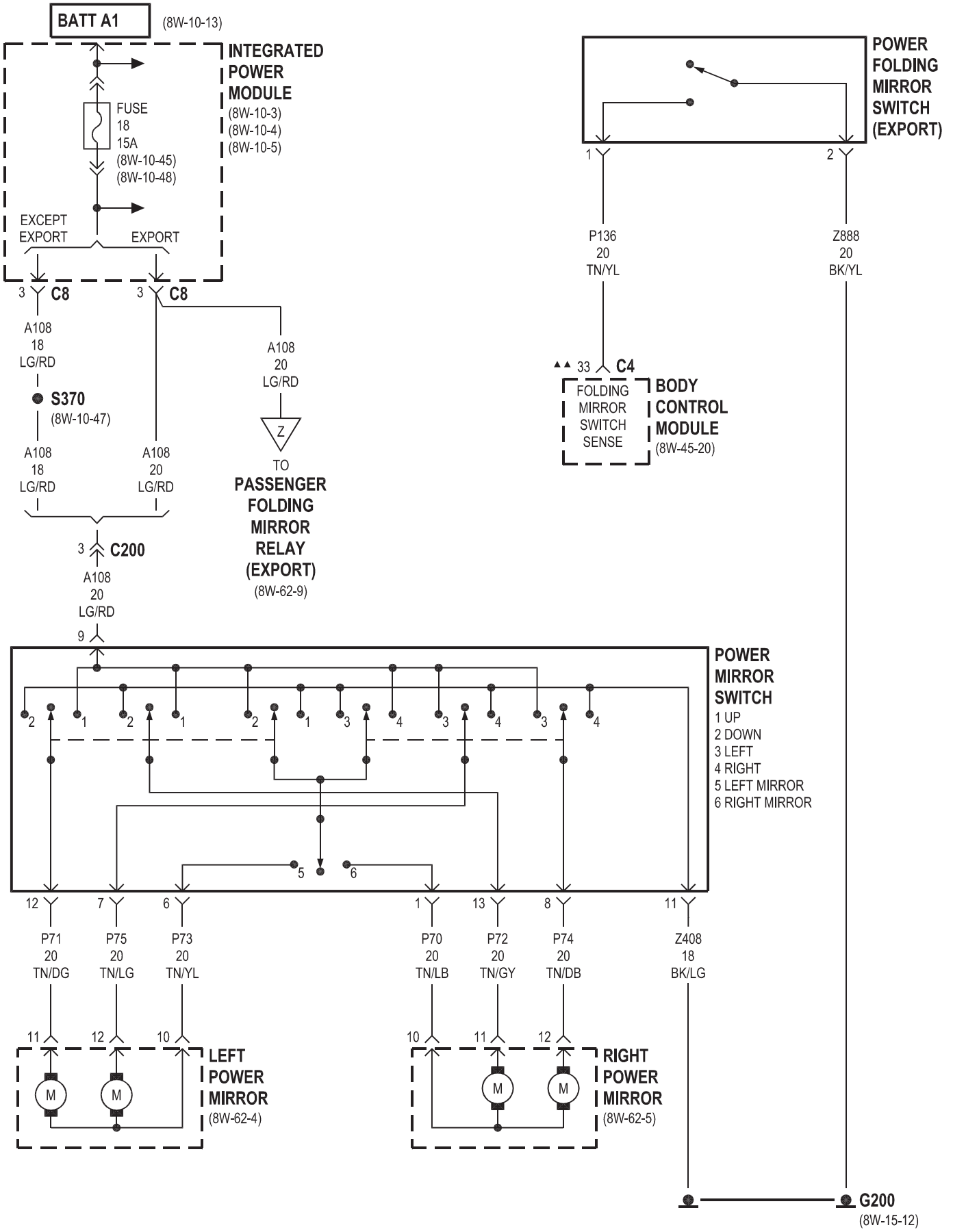
BATT A1
(8W-10-13)
INTEGRATED POWER MODULE
(8W-10-3)
(8W-10-4)
(8W-10-5)
FUSE 18 15A
(8W-10-45)
(8W-10-48)
EXCEPT EXPORT
EXPORT
3 C8
3 C8
A108 18 LG/RD
S370
(8W-10-47)
A108 18 LG/RD
A108 20 LG/RD
A108 20 LG/RD
Z
TO PASSENGER FOLDING MIRROR RELAY (EXPORT)
(8W-62-9)
3 C200
A108 20 LG/RD
9
POWER FOLDING MIRROR SWITCH (EXPORT)
1
2
P136 20 TN/YL
Z888 20 BK/YL
▲▲ 33 C4
FOLDING MIRROR SWITCH SENSE
BODY CONTROL MODULE
(8W-45-20)
POWER MIRROR SWITCH
1 UP
2 DOWN
3 LEFT
4 RIGHT
5 LEFT MIRROR
6 RIGHT MIRROR
12
7
6
1
13
8
11
P71 20 TN/DG
P75 20 TN/LG
P73 20 TN/YL
P70 20 TN/LB
P72 20 TN/GY
P74 20 TN/DB
Z408 18 BK/LG
11
12
10
10
11
12
M
M
LEFT POWER MIRROR
(8W-62-4)
M
M
RIGHT POWER MIRROR
(8W-62-5)
G200
(8W-15-12)

▲▲ EXPORT

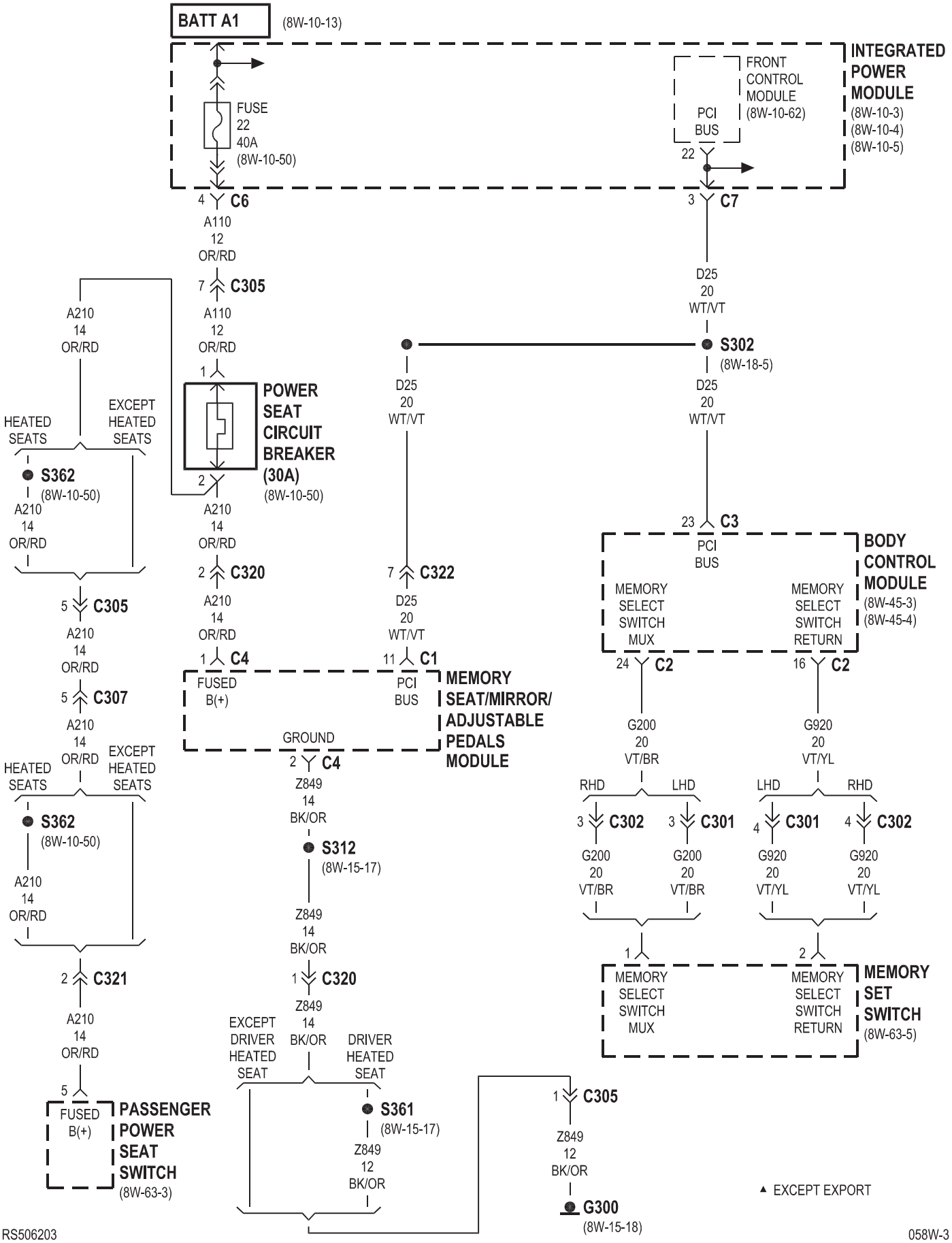
BATT A1
(8W-10-13)
FUSE 22 40A (8W-10-50)
INTEGRATED POWER MODULE (8W-10-3) (8W-10-4) (8W-10-5)
FRONT CONTROL MODULE (8W-10-62)
PCI BUS
4 C6
3 C7
A110 12 OR/RD
7 C305
D25 20 WT/VT
S302 (8W-18-5)
A210 14 OR/RD
HEATED SEATS
EXCEPT HEATED SEATS
S362 (8W-10-50)
POWER SEAT CIRCUIT BREAKER (30A) (8W-10-50)
1
2
2 C320
7 C322
5 C305
5 C307
23 C3
BODY CONTROL MODULE (8W-45-3) (8W-45-4)
MEMORY SELECT SWITCH MUX
MEMORY SELECT SWITCH RETURN
24 C2
16 C2
1 C4
11 C1
FUSED B(+)
MEMORY SEAT/MIRROR/ ADJUSTABLE PEDALS MODULE
GROUND
2 C4
Z849 14 BK/OR
S312 (8W-15-17)
G200 20 VT/BR
G920 20 VT/YL
RHD
LHD
3 C302
3 C301
4 C301
4 C302
1
2
MEMORY SET SWITCH (8W-63-5)
2 C321
1 C320
EXCEPT DRIVER HEATED SEAT
DRIVER HEATED SEAT
S361 (8W-15-17)
1 C305
G300 (8W-15-18)
5
FUSED B(+)
PASSENGER POWER SEAT SWITCH (8W-63-3)
▲ EXCEPT EXPORT

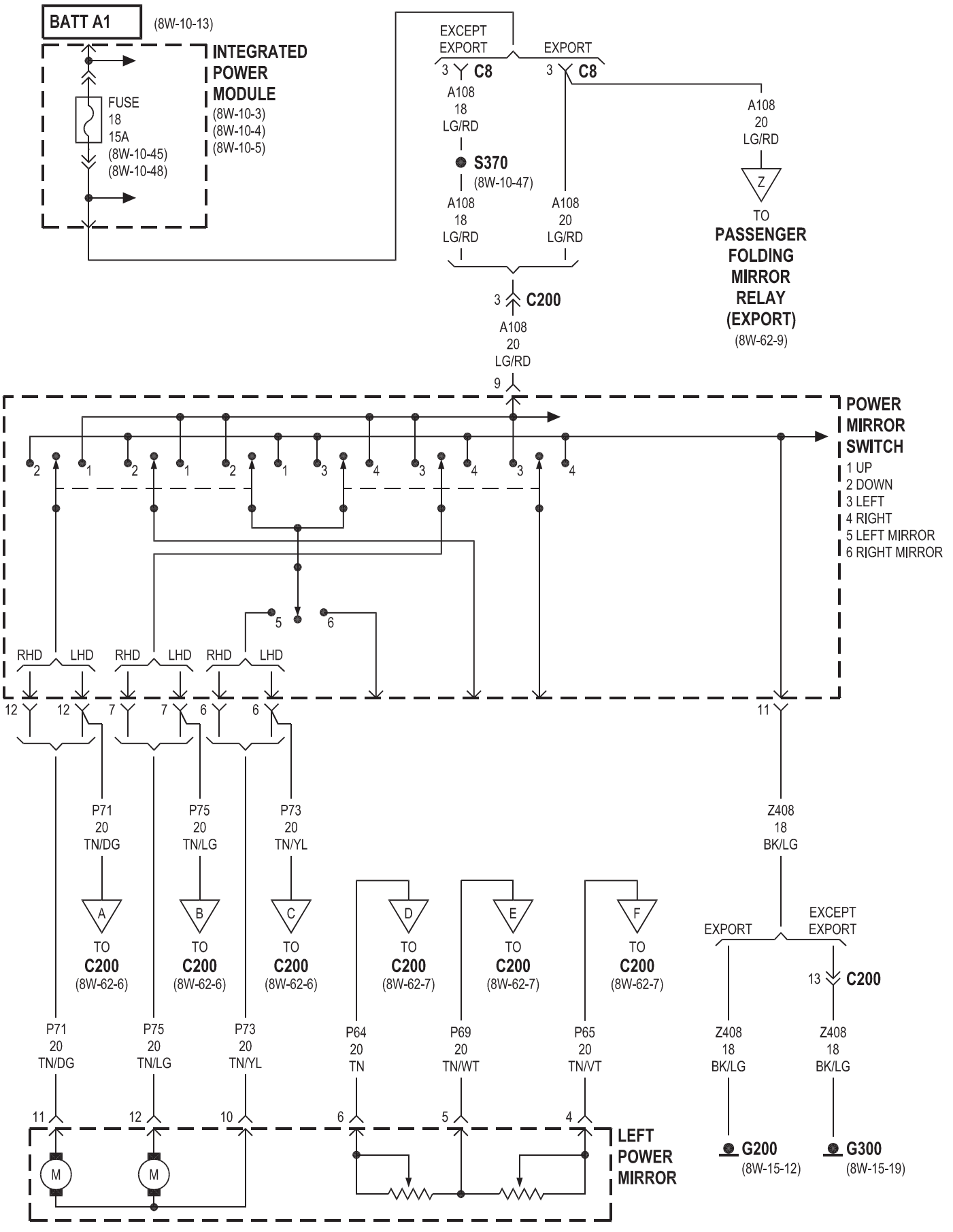
BATT A1
(8W-10-13)
INTEGRATED POWER MODULE
(8W-10-3)
(8W-10-4)
(8W-10-5)
FUSE 18 15A
(8W-10-45)
(8W-10-48)
EXCEPT EXPORT
EXPORT
3 C8
3 C8
A108 18 LG/RD
S370
(8W-10-47)
A108 18 LG/RD
A108 20 LG/RD
A108 20 LG/RD
Z
TO PASSENGER FOLDING MIRROR RELAY (EXPORT)
(8W-62-9)
3 C200
A108 20 LG/RD
9
POWER MIRROR SWITCH
1 UP
2 DOWN
3 LEFT
4 RIGHT
5 LEFT MIRROR
6 RIGHT MIRROR
RHD LHD RHD LHD RHD LHD
12 12 7 7 6 6
11
P71 20 TN/DG
P75 20 TN/LG
P73 20 TN/YL
Z408 18 BK/LG
A
B
C
D
E
F
TO C200 (8W-62-6)
TO C200 (8W-62-6)
TO C200 (8W-62-6)
TO C200 (8W-62-7)
TO C200 (8W-62-7)
TO C200 (8W-62-7)
EXPORT
EXCEPT EXPORT
13 C200
P71 20 TN/DG
P75 20 TN/LG
P73 20 TN/YL
P64 20 TN
P69 20 TN/WT
P65 20 TN/VT
Z408 18 BK/LG
Z408 18 BK/LG
11 12 10 6 5 4
M
M
LEFT POWER MIRROR
G200
(8W-15-12)
G300
(8W-15-19)

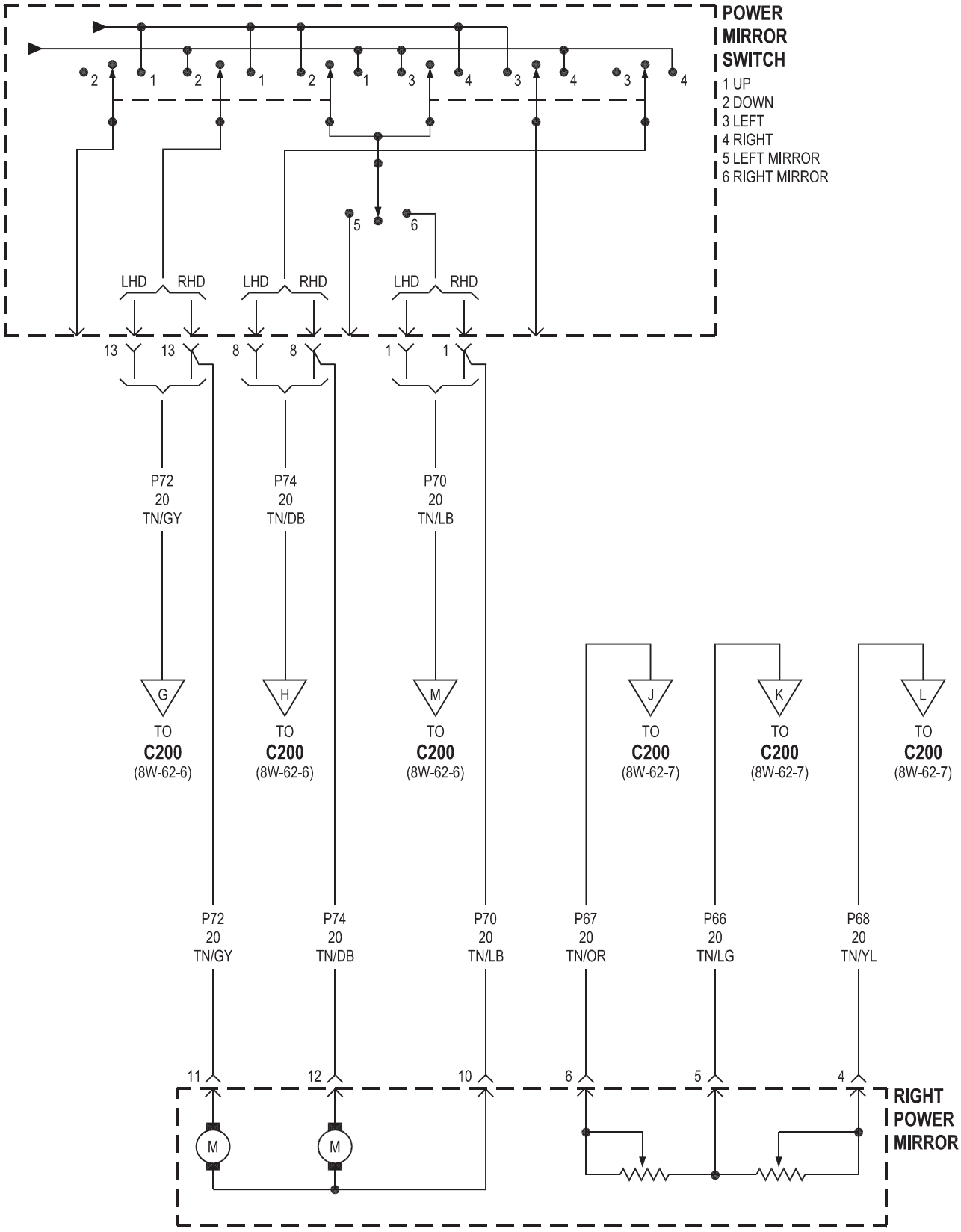
POWER
MIRROR
SWITCH
1 UP
2 DOWN
3 LEFT
4 RIGHT
5 LEFT MIRROR
6 RIGHT MIRROR
LHD
RHD
P72
20
TN/GY
P74
20
TN/DB
P70
20
TN/LB
P67
20
TN/OR
P66
20
TN/LG
P68
20
TN/YL
TO
C200
(8W-62-6)
(8W-62-7)
RIGHT
POWER
MIRROR

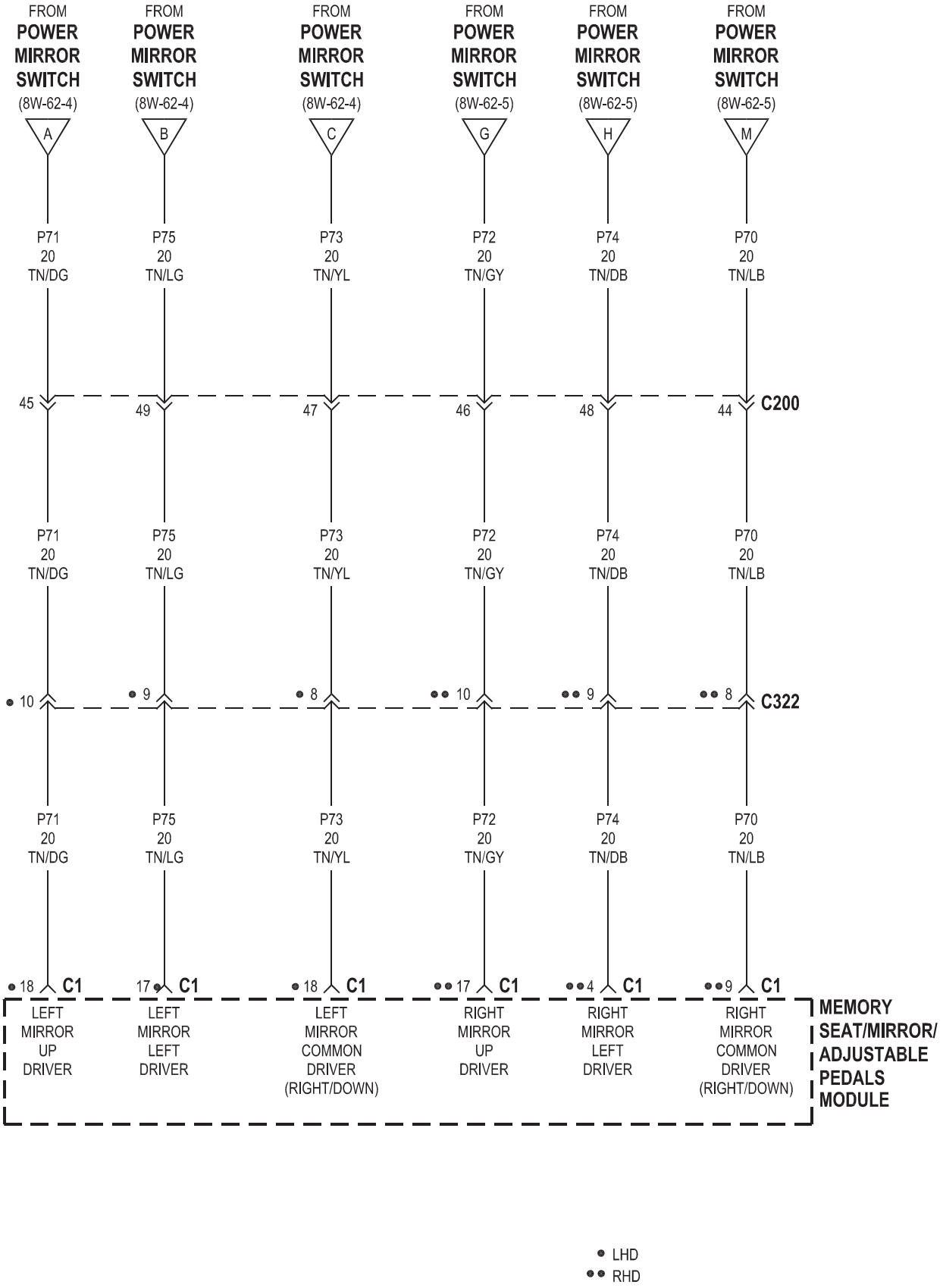
FROM POWER MIRROR SWITCH (8W-62-4) A
FROM POWER MIRROR SWITCH (8W-62-4) B
FROM POWER MIRROR SWITCH (8W-62-4) C
FROM POWER MIRROR SWITCH (8W-62-5) G
FROM POWER MIRROR SWITCH (8W-62-5) H
FROM POWER MIRROR SWITCH (8W-62-5) M
P71 20 TN/DG
P75 20 TN/LG
P73 20 TN/YL
P72 20 TN/GY
P74 20 TN/DB
P70 20 TN/LB
45
49
47
46
48
44
C200
10
9
8
10
9
8
C322
18 C1
17 C1
18 C1
17 C1
4 C1
9 C1
LEFT MIRROR UP DRIVER
LEFT MIRROR LEFT DRIVER
LEFT MIRROR COMMON DRIVER (RIGHT/DOWN)
RIGHT MIRROR UP DRIVER
RIGHT MIRROR LEFT DRIVER
RIGHT MIRROR COMMON DRIVER (RIGHT/DOWN)
MEMORY SEAT/MIRROR/ ADJUSTABLE PEDALS MODULE
LHD
RHD

MEMORY

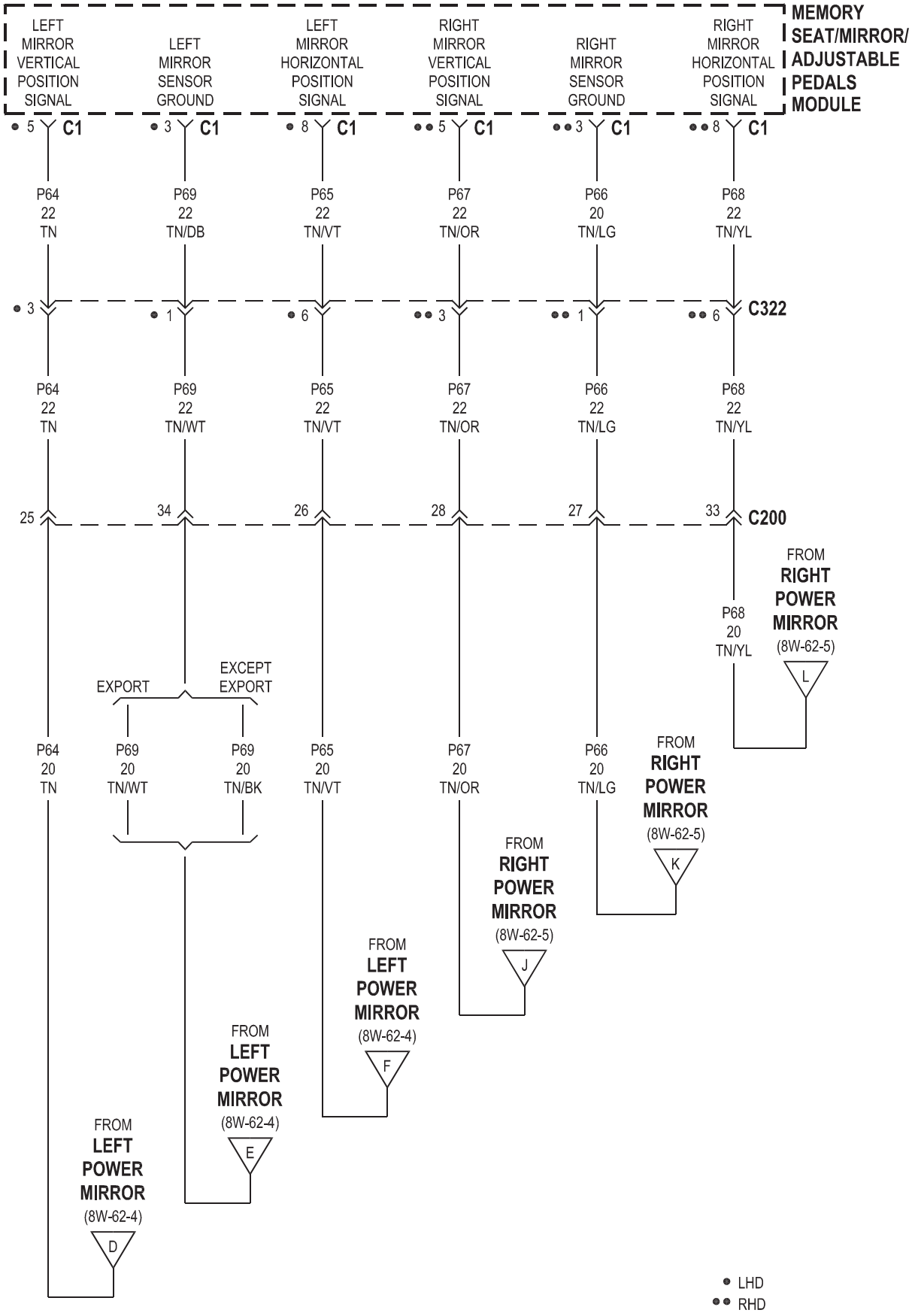
MEMORY SEAT/MIRROR/ ADJUSTABLE PEDALS MODULE
LEFT MIRROR VERTICAL POSITION SIGNAL
LEFT MIRROR SENSOR GROUND
LEFT MIRROR HORIZONTAL POSITION SIGNAL
RIGHT MIRROR VERTICAL POSITION SIGNAL
RIGHT MIRROR SENSOR GROUND
RIGHT MIRROR HORIZONTAL POSITION SIGNAL
C1
C322
C200
P64 22 TN
P69 22 TN/DB
P65 22 TN/VT
P67 22 TN/OR
P66 20 TN/LG
P68 22 TN/YL
P64 22 TN
P69 22 TN/WT
P65 22 TN/VT
P67 22 TN/OR
P66 22 TN/LG
P68 22 TN/YL
P68 20 TN/YL
FROM RIGHT POWER MIRROR (8W-62-5)
L
EXPORT
EXCEPT EXPORT
P64 20 TN
P69 20 TN/WT
P69 20 TN/BK
P65 20 TN/VT
P67 20 TN/OR
P66 20 TN/LG
FROM RIGHT POWER MIRROR (8W-62-5)
K
FROM RIGHT POWER MIRROR (8W-62-5)
J
FROM LEFT POWER MIRROR (8W-62-4)
F
FROM LEFT POWER MIRROR (8W-62-4)
E
FROM LEFT POWER MIRROR (8W-62-4)
D
LHD
RHD

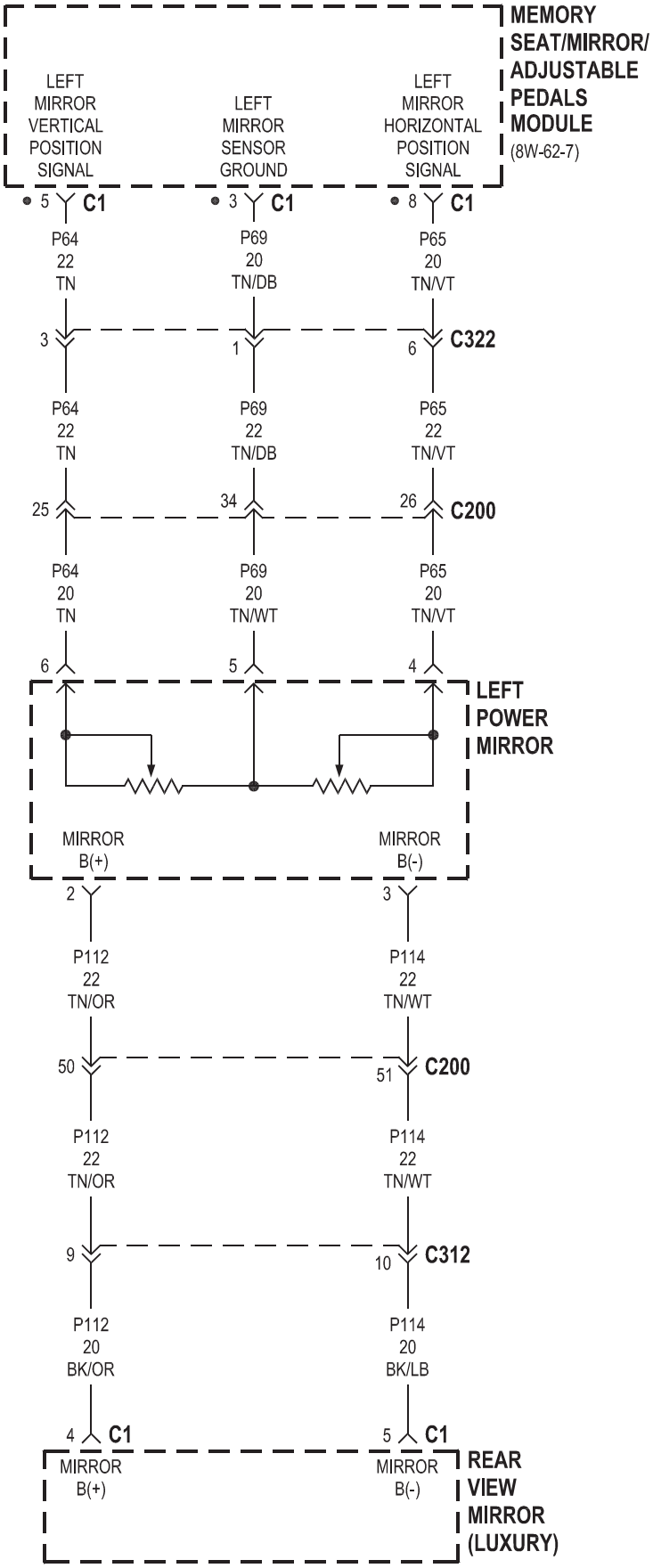
MEMORY SEAT/MIRROR/ ADJUSTABLE PEDALS MODULE
(8W-62-7)
LEFT MIRROR VERTICAL POSITION SIGNAL
LEFT MIRROR SENSOR GROUND
LEFT MIRROR HORIZONTAL POSITION SIGNAL
5 C1
3 C1
8 C1
P64 22 TN
P69 20 TN/DB
P65 20 TN/VT
3
1
6
C322
P64 22 TN
P69 22 TN/DB
P65 22 TN/VT
25
34
26
C200
P64 20 TN
P69 20 TN/WT
P65 20 TN/VT
6
5
4
LEFT POWER MIRROR
MIRROR B(+)
MIRROR B(-)
2
3
P112 22 TN/OR
P114 22 TN/WT
50
51
C200
P112 22 TN/OR
P114 22 TN/WT
9
10
C312
P112 20 BK/OR
P114 20 BK/LB
4 C1
5 C1
MIRROR B(+)
MIRROR B(-)
REAR VIEW MIRROR (LUXURY)

• LHD

EXPORT FOLDING MIRRORS

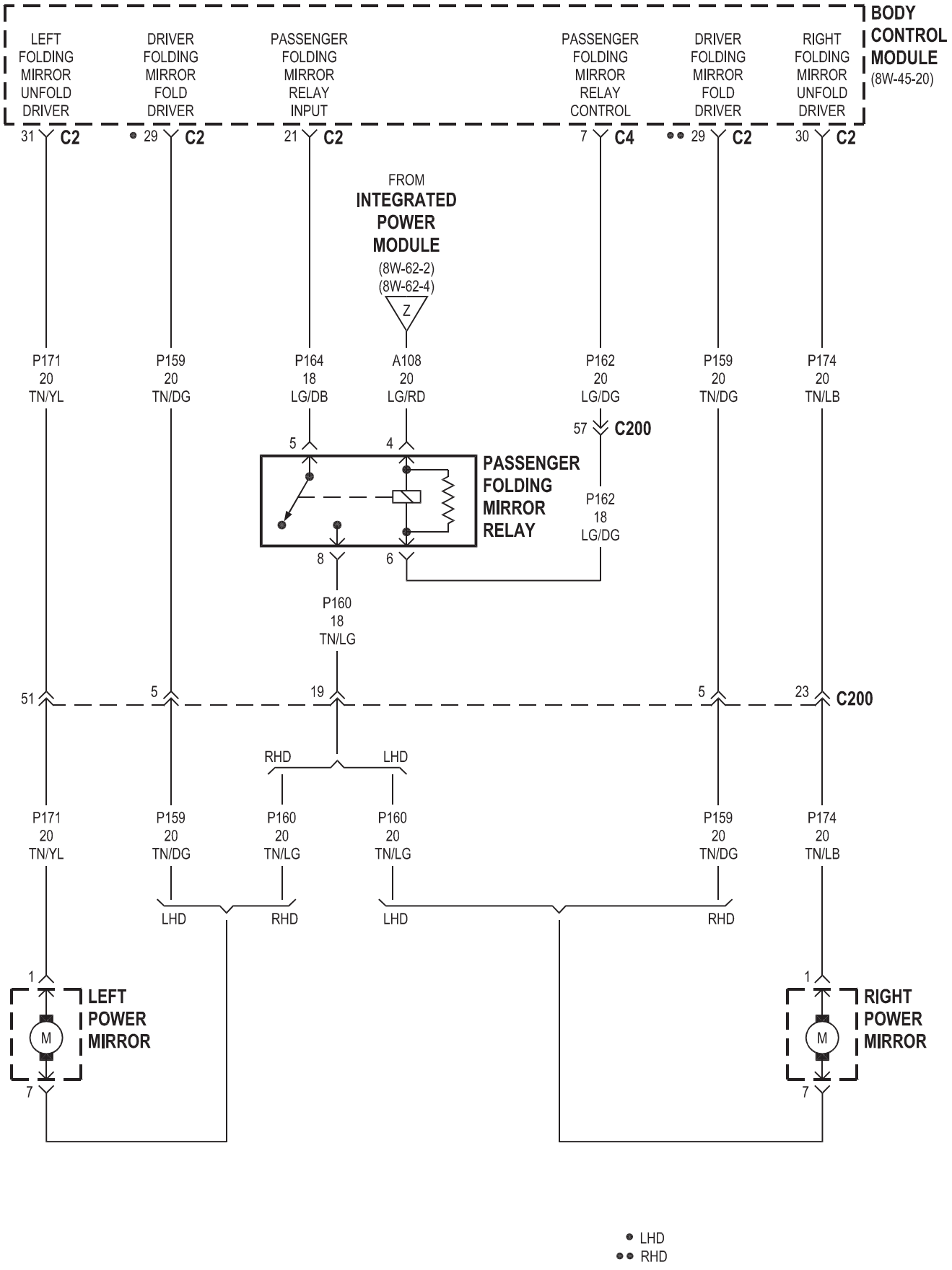

• LHD
•• RHD

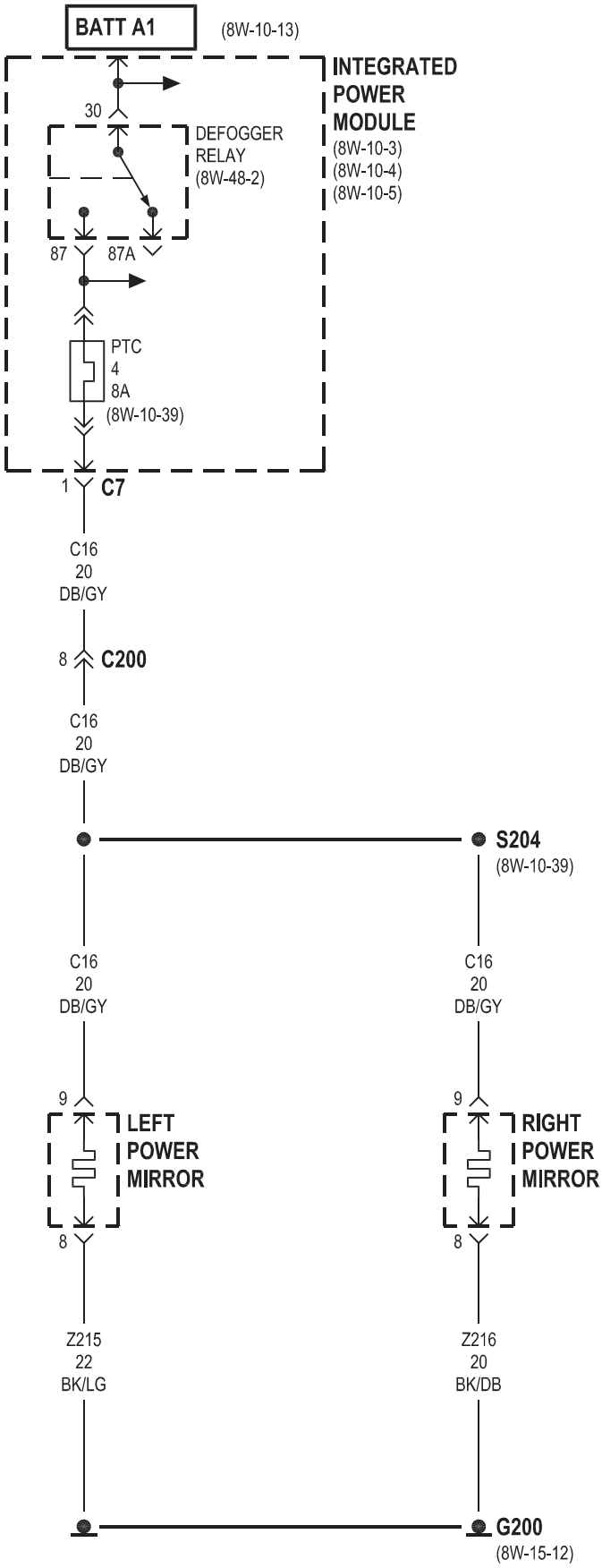
BATT A1
(8W-10-13)
INTEGRATED POWER MODULE
(8W-10-3)
(8W-10-4)
(8W-10-5)
30
DEFOGGER RELAY
(8W-48-2)
87
87A
PTC
4
8A
(8W-10-39)
1
C7
C16
20
DB/GY
8
C200
C16
20
DB/GY
S204
(8W-10-39)
C16
20
DB/GY
C16
20
DB/GY
9
9
LEFT POWER MIRROR
RIGHT POWER MIRROR
8
8
Z215
22
BK/LG
Z216
20
BK/DB
G200
(8W-15-12)

8W-63 POWER SEATS

Component	Page
Body Control Module	8W-63-5, 9
Driver Heated Seat Back	8W-63-9
Driver Heated Seat Cushion	8W-63-9
Driver Heated Seat Module	8W-63-3, 4, 9
Driver Power Seat Front Riser Motor	8W-63-2, 7
Driver Power Seat Front Riser Position Sensor	8W-63-8
Driver Power Seat Horizontal Motor	8W-63-2, 7
Driver Power Seat Horizontal Position Sensor	8W-63-8
Driver Power Seat Rear Riser Motor	8W-63-2, 7
Driver Power Seat Rear Riser Position Sensor	8W-63-8
Driver Power Seat Recliner Motor	8W-63-2, 7
Driver Power Seat Recliner Position Sensor	8W-63-8
Driver Power Seat Switch	8W-63-2, 6
Front Control Module	8W-63-5
Fuse 22	8W-63-2, 4
G300	8W-63-2, 4, 6, 9
G301	8W-63-3, 10, 11
Instrument Panel Switch Bank	8W-63-9
Integrated Power Module	8W-63-2, 4, 5
Left Sliding Door Control Module	8W-63-5
Memory Seat/Mirror/Adjustable Pedals Module	8W-63-4, 5, 6, 7, 8
Memory Set Switch	8W-63-5
Passenger Heated Seat Back	8W-63-10, 11
Passenger Heated Seat Cushion	8W-63-10, 11
Passenger Heated Seat Module	8W-63-10, 11
Passenger Power Seat Front Riser Motor	8W-63-3
Passenger Power Seat Horizontal Motor	8W-63-3
Passenger Power Seat Rear Riser Motor	8W-63-3
Passenger Power Seat Recliner Motor	8W-63-3
Passenger Power Seat Switch	8W-63-3
Power Seat Circuit Breaker	8W-63-2, 3, 4

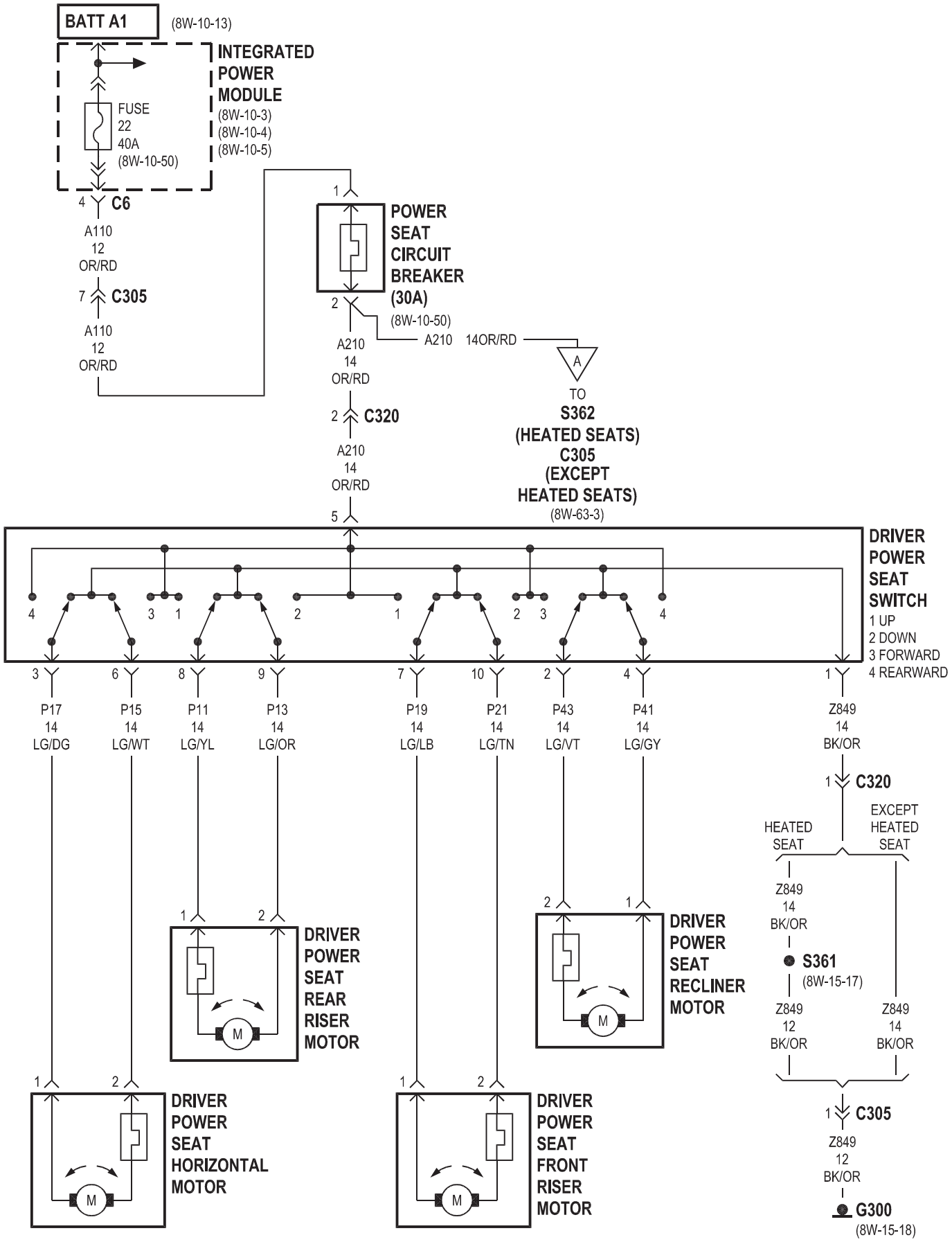
BATT A1
(8W-10-13)
INTEGRATED POWER MODULE
(8W-10-3)
(8W-10-4)
(8W-10-5)
FUSE 22 40A
(8W-10-50)
4 C6
A110 12 OR/RD
7 C305
A110 12 OR/RD
1
POWER SEAT CIRCUIT BREAKER (30A)
2
(8W-10-50)
A210 14OR/RD
A
TO S362 (HEATED SEATS) C305 (EXCEPT HEATED SEATS)
(8W-63-3)
A210 14 OR/RD
2 C320
A210 14 OR/RD
5
DRIVER POWER SEAT SWITCH
1 UP
2 DOWN
3 FORWARD
4 REARWARD
3 P17 14 LG/DG
6 P15 14 LG/WT
8 P11 14 LG/YL
9 P13 14 LG/OR
7 P19 14 LG/LB
10 P21 14 LG/TN
2 P43 14 LG/VT
4 P41 14 LG/GY
1 Z849 14 BK/OR
1 C320
HEATED SEAT
EXCEPT HEATED SEAT
Z849 14 BK/OR
S361
(8W-15-17)
Z849 12 BK/OR
Z849 14 BK/OR
1 C305
Z849 12 BK/OR
G300
(8W-15-18)
DRIVER POWER SEAT REAR RISER MOTOR
DRIVER POWER SEAT RECLINER MOTOR
DRIVER POWER SEAT HORIZONTAL MOTOR
DRIVER POWER SEAT FRONT RISER MOTOR
M

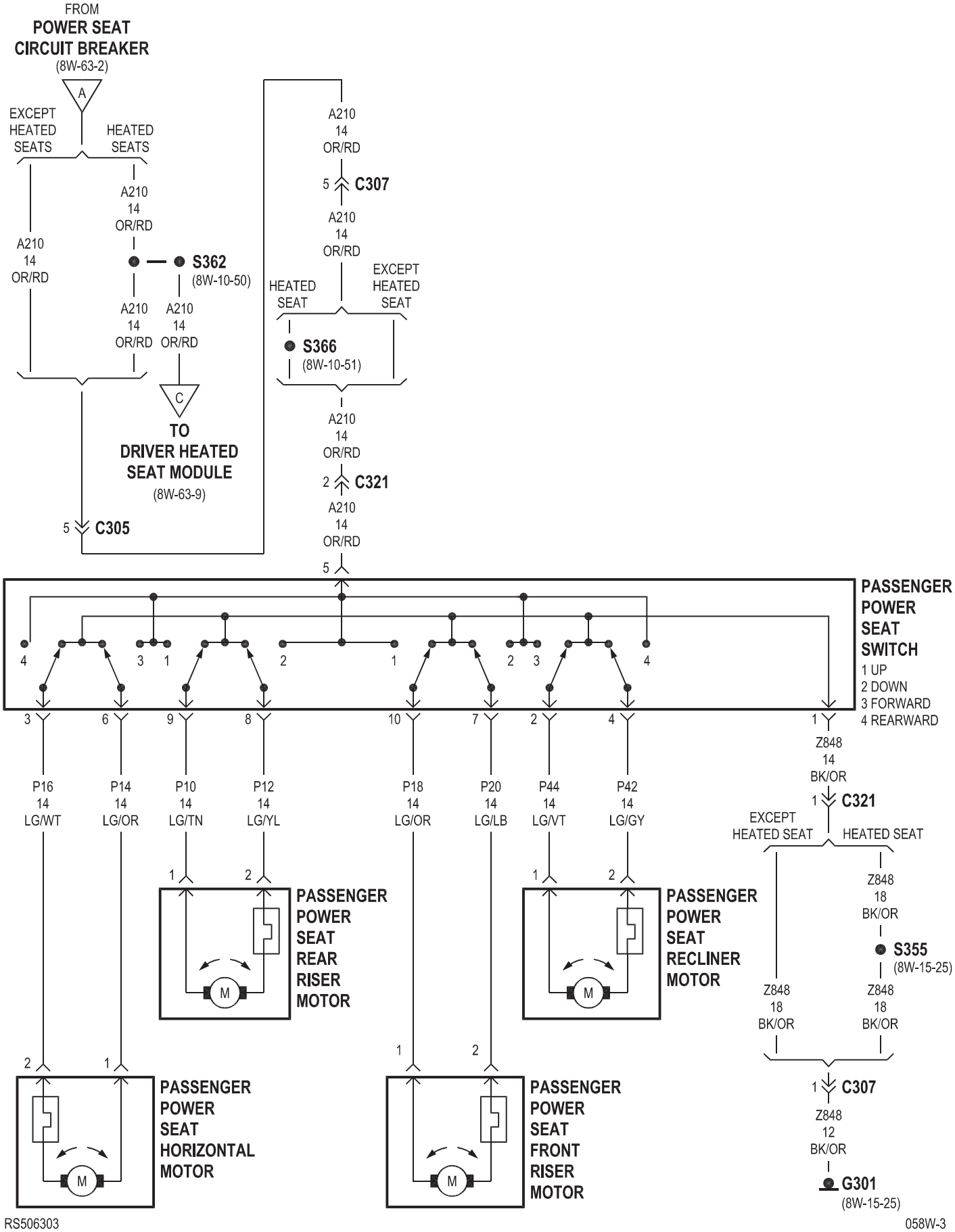

RS506303

058W-3

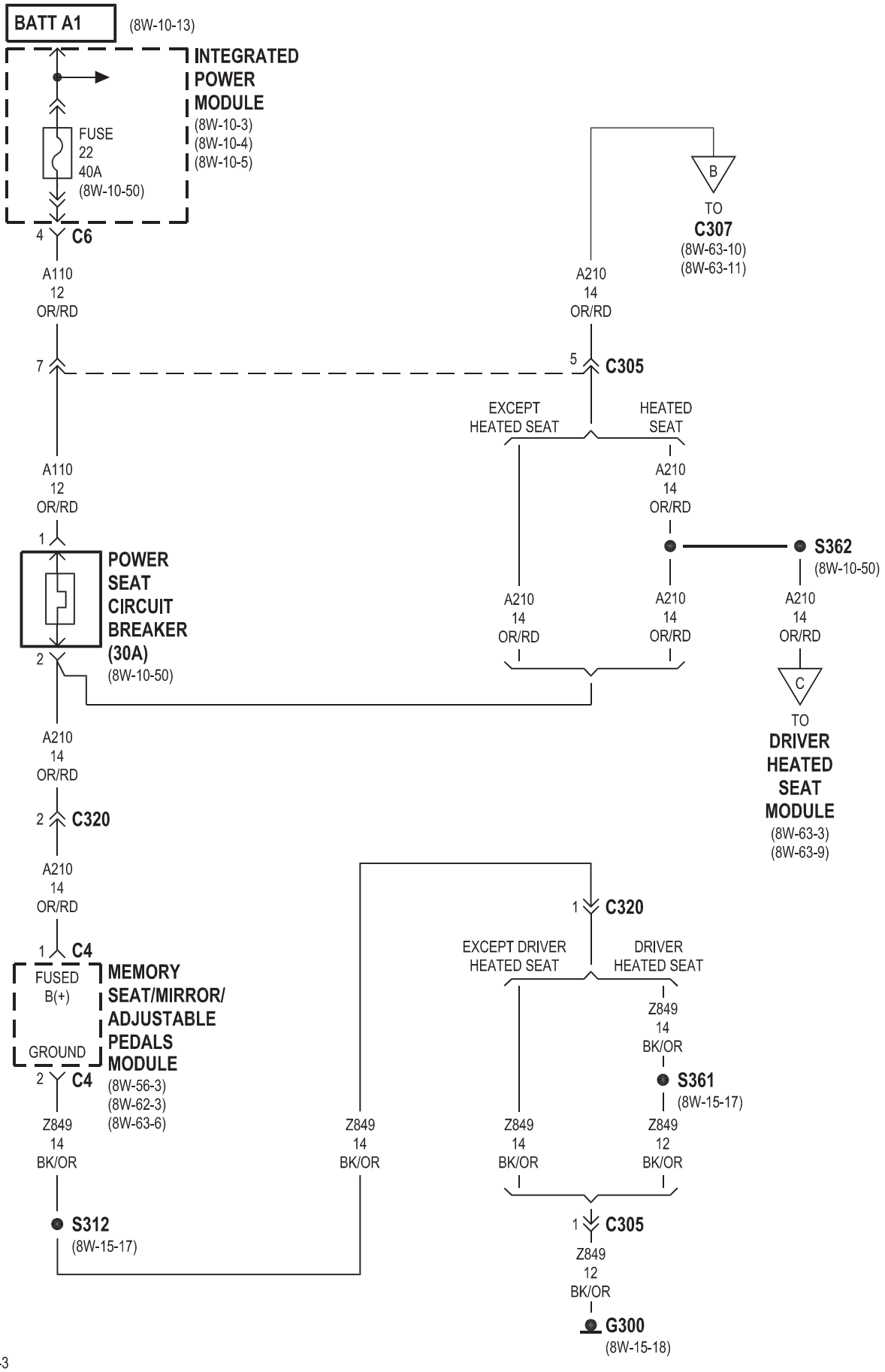
BATT A1
(8W-10-13)
INTEGRATED POWER MODULE
(8W-10-3)
(8W-10-4)
(8W-10-5)
FUSE
22
40A
(8W-10-50)
4 C6
A110
12
OR/RD
7
B
TO
C307
(8W-63-10)
(8W-63-11)
A210
14
OR/RD
5 C305
EXCEPT HEATED SEAT
HEATED SEAT
A110
12
OR/RD
1
POWER SEAT CIRCUIT BREAKER (30A)
(8W-10-50)
2
A210
14
OR/RD
S362
(8W-10-50)
A210
14
OR/RD
A210
14
OR/RD
A210
14
OR/RD
C
TO
DRIVER HEATED SEAT MODULE
(8W-63-3)
(8W-63-9)
A210
14
OR/RD
2 C320
A210
14
OR/RD
1 C4
FUSED B(+)
GROUND
MEMORY SEAT/MIRROR/ ADJUSTABLE PEDALS MODULE
2 C4
(8W-56-3)
(8W-62-3)
(8W-63-6)
1 C320
EXCEPT DRIVER HEATED SEAT
DRIVER HEATED SEAT
Z849
14
BK/OR
S361
(8W-15-17)
Z849
14
BK/OR
Z849
14
BK/OR
Z849
14
BK/OR
Z849
12
BK/OR
S312
(8W-15-17)
1 C305
Z849
12
BK/OR
G300
(8W-15-18)

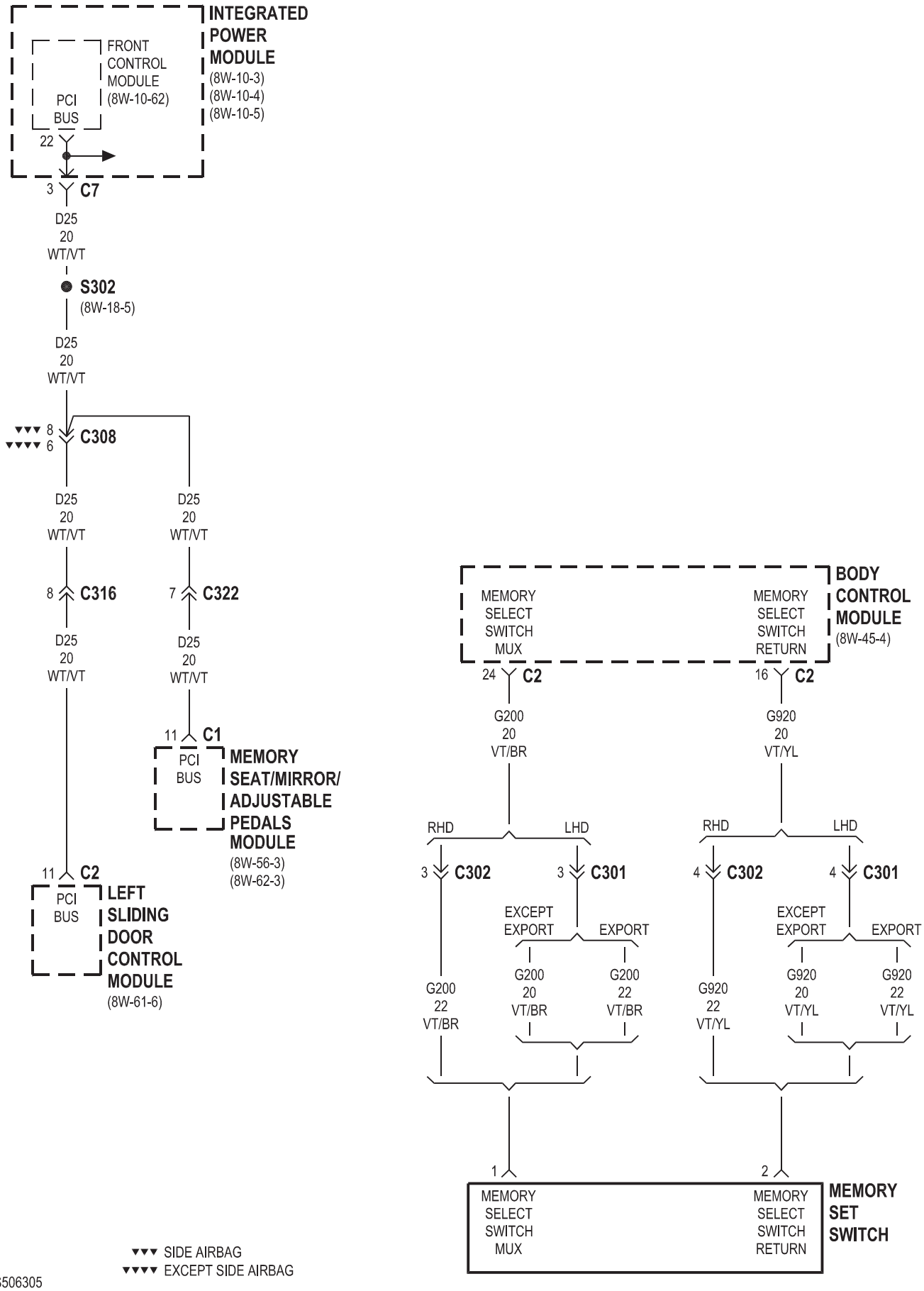
INTEGRATED POWER MODULE
(8W-10-3)
(8W-10-4)
(8W-10-5)
FRONT CONTROL MODULE (8W-10-62)
PCI BUS
22
3 C7
D25 20 WT/VT
S302
(8W-18-5)
D25 20 WT/VT
8 C308
6
D25 20 WT/VT
D25 20 WT/VT
8 C316
7 C322
D25 20 WT/VT
D25 20 WT/VT
11 C1
PCI BUS
MEMORY SEAT/MIRROR/ ADJUSTABLE PEDALS MODULE
(8W-56-3)
(8W-62-3)
11 C2
PCI BUS
LEFT SLIDING DOOR CONTROL MODULE
(8W-61-6)
BODY CONTROL MODULE
(8W-45-4)
MEMORY SELECT SWITCH MUX
MEMORY SELECT SWITCH RETURN
24 C2
16 C2
G200 20 VT/BR
G920 20 VT/YL
RHD
LHD
RHD
LHD
3 C302
3 C301
4 C302
4 C301
EXCEPT EXPORT
EXPORT
EXCEPT EXPORT
EXPORT
G200 22 VT/BR
G200 20 VT/BR
G200 22 VT/BR
G920 22 VT/YL
G920 20 VT/YL
G920 22 VT/YL
1
2
MEMORY SELECT SWITCH MUX
MEMORY SELECT SWITCH RETURN
MEMORY SET SWITCH
▼▼▼ SIDE AIRBAG
▼▼▼▼ EXCEPT SIDE AIRBAG

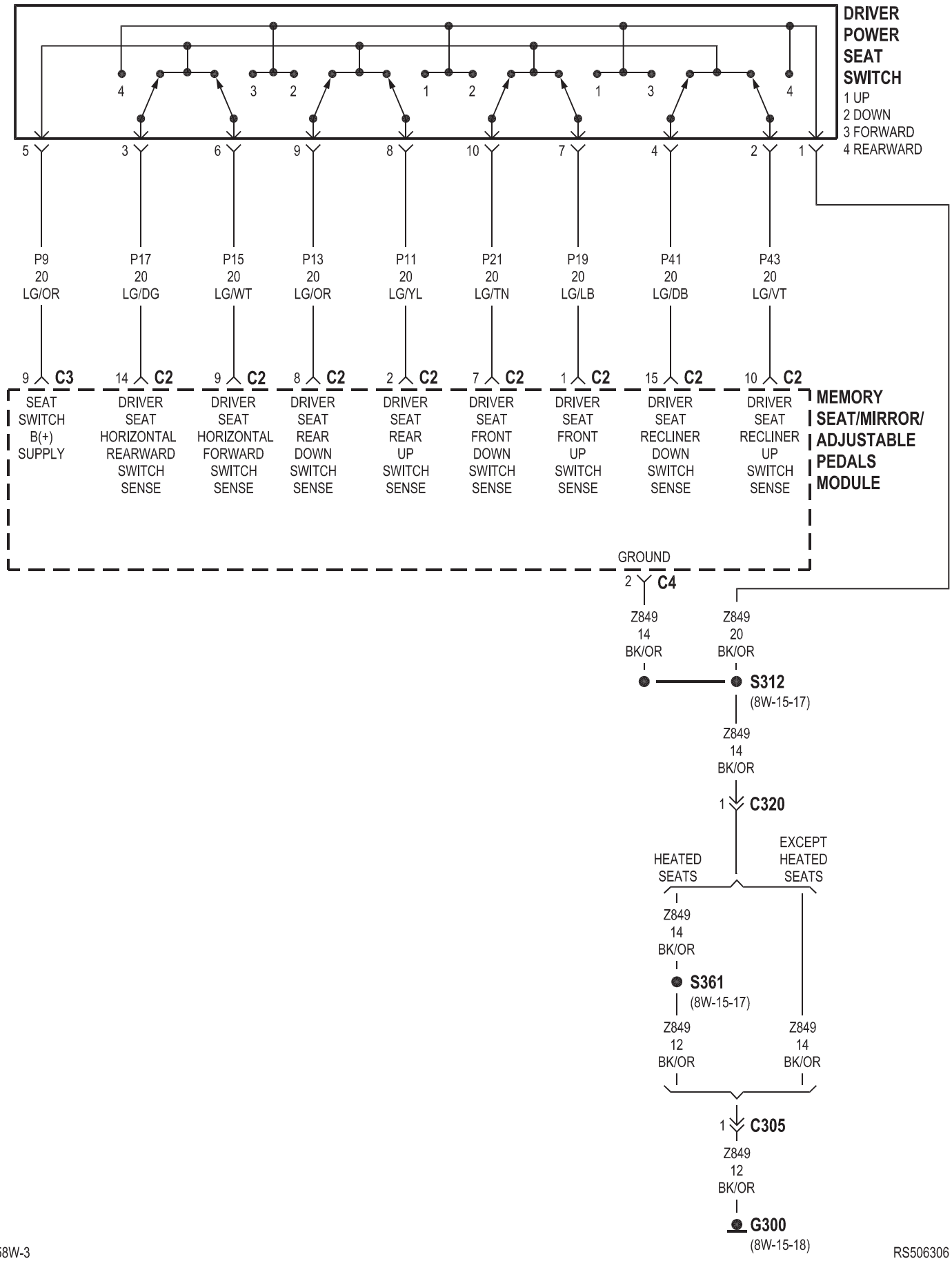
DRIVER POWER SEAT SWITCH
1 UP
2 DOWN
3 FORWARD
4 REARWARD
4 3 2 1 2 1 3 4
5 3 6 9 8 10 7 4 2 1
P9 20 LG/OR
P17 20 LG/DG
P15 20 LG/WT
P13 20 LG/OR
P11 20 LG/YL
P21 20 LG/TN
P19 20 LG/LB
P41 20 LG/DB
P43 20 LG/VT
9 C3
14 C2
9 C2
8 C2
2 C2
7 C2
1 C2
15 C2
10 C2
SEAT SWITCH B(+) SUPPLY
DRIVER SEAT HORIZONTAL REARWARD SWITCH SENSE
DRIVER SEAT HORIZONTAL FORWARD SWITCH SENSE
DRIVER SEAT REAR DOWN SWITCH SENSE
DRIVER SEAT REAR UP SWITCH SENSE
DRIVER SEAT FRONT DOWN SWITCH SENSE
DRIVER SEAT FRONT UP SWITCH SENSE
DRIVER SEAT RECLINER DOWN SWITCH SENSE
DRIVER SEAT RECLINER UP SWITCH SENSE
MEMORY SEAT/MIRROR/ ADJUSTABLE PEDALS MODULE
GROUND
2 C4
Z849 14 BK/OR
Z849 20 BK/OR
S312
(8W-15-17)
Z849 14 BK/OR
1 C320
HEATED SEATS
EXCEPT HEATED SEATS
Z849 14 BK/OR
S361
(8W-15-17)
Z849 12 BK/OR
Z849 14 BK/OR
1 C305
Z849 12 BK/OR
G300
(8W-15-18)

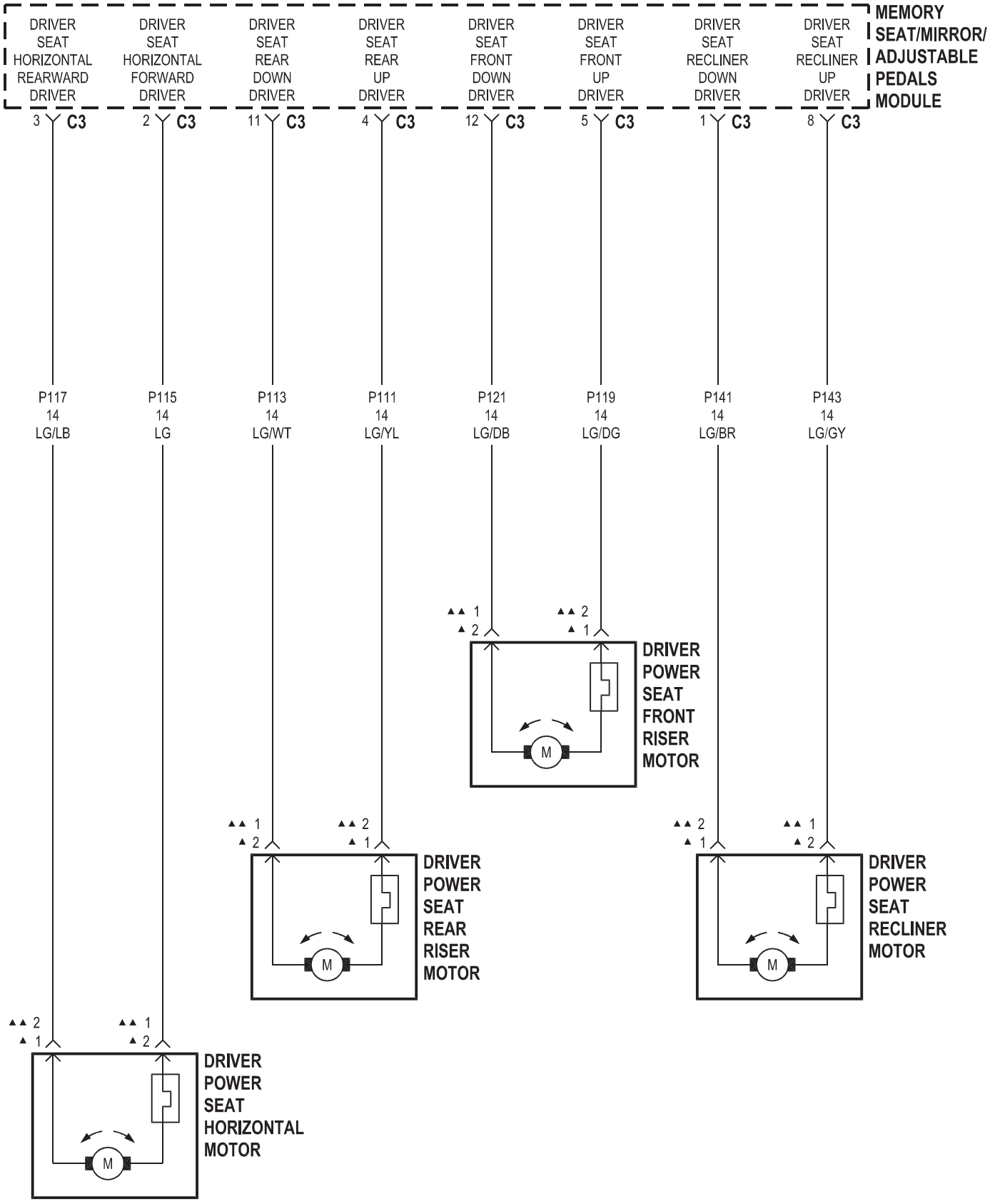
MEMORY SEAT/MIRROR/ ADJUSTABLE PEDALS MODULE
DRIVER SEAT HORIZONTAL REARWARD DRIVER
DRIVER SEAT HORIZONTAL FORWARD DRIVER
DRIVER SEAT REAR DOWN DRIVER
DRIVER SEAT REAR UP DRIVER
DRIVER SEAT FRONT DOWN DRIVER
DRIVER SEAT FRONT UP DRIVER
DRIVER SEAT RECLINER DOWN DRIVER
DRIVER SEAT RECLINER UP DRIVER
3 C3
2 C3
11 C3
4 C3
12 C3
5 C3
1 C3
8 C3
P117 14 LG/LB
P115 14 LG
P113 14 LG/WT
P111 14 LG/YL
P121 14 LG/DB
P119 14 LG/DG
P141 14 LG/BR
P143 14 LG/GY
▲▲ 1 ▲ 2
▲▲ 2 ▲ 1
DRIVER POWER SEAT FRONT RISER MOTOR
DRIVER POWER SEAT REAR RISER MOTOR
DRIVER POWER SEAT RECLINER MOTOR
DRIVER POWER SEAT HORIZONTAL MOTOR
M
▲ EXCEPT EXPORT
▲▲ EXPORT

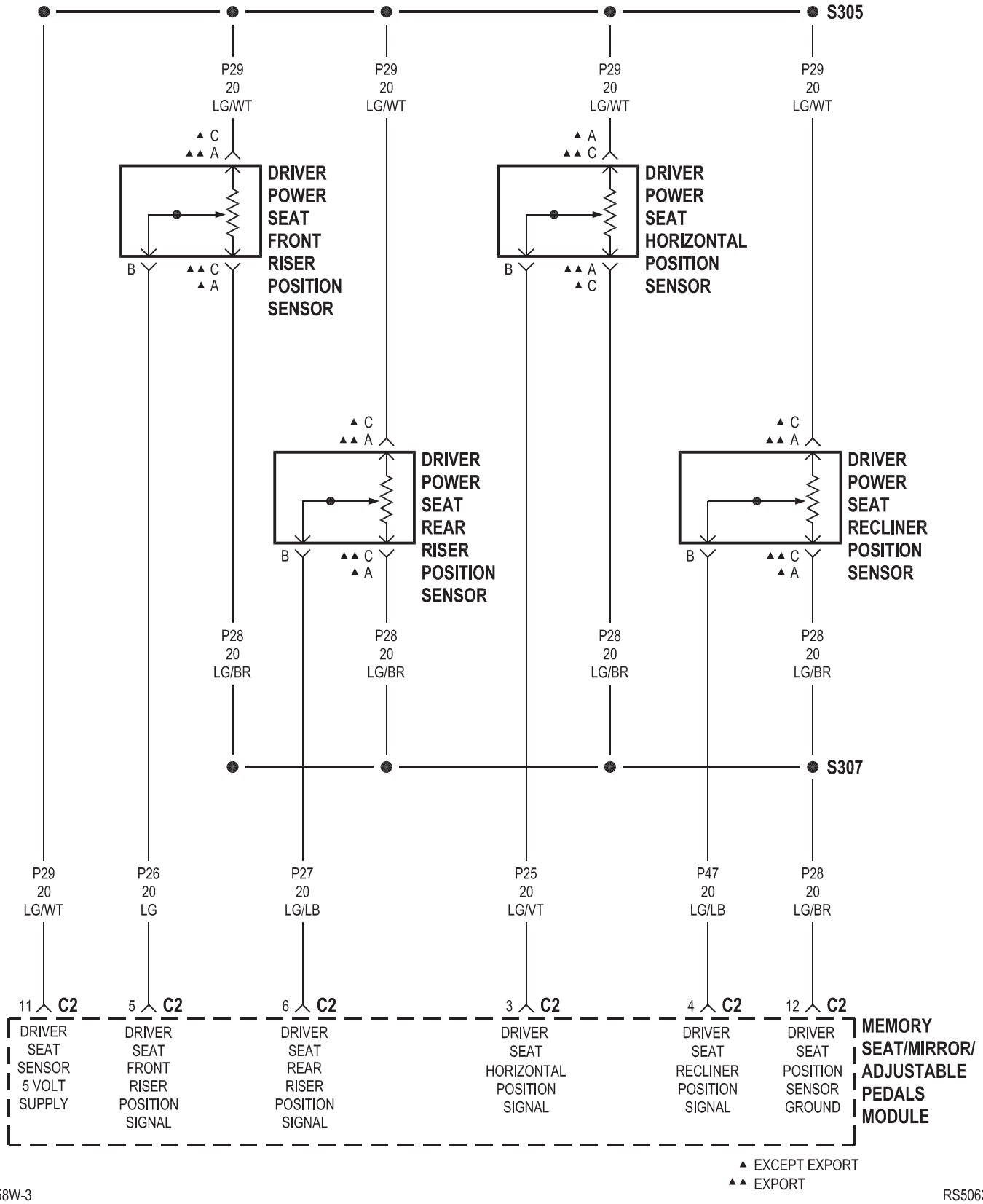
S305
P29
20
LG/WT
P29
20
LG/WT
P29
20
LG/WT
P29
20
LG/WT
▲ C
▲▲ A
DRIVER
POWER
SEAT
FRONT
RISER
POSITION
SENSOR
B
▲▲ C
▲ A
▲ A
▲▲ C
DRIVER
POWER
SEAT
HORIZONTAL
POSITION
SENSOR
B
▲▲ A
▲ C
▲ C
▲▲ A
DRIVER
POWER
SEAT
REAR
RISER
POSITION
SENSOR
B
▲▲ C
▲ A
▲ C
▲▲ A
DRIVER
POWER
SEAT
RECLINER
POSITION
SENSOR
B
▲▲ C
▲ A
P28
20
LG/BR
P28
20
LG/BR
P28
20
LG/BR
P28
20
LG/BR
S307
P29
20
LG/WT
P26
20
LG
P27
20
LG/LB
P25
20
LG/VT
P47
20
LG/LB
P28
20
LG/BR
11 C2
5 C2
6 C2
3 C2
4 C2
12 C2
DRIVER SEAT SENSOR 5 VOLT SUPPLY
DRIVER SEAT FRONT RISER POSITION SIGNAL
DRIVER SEAT REAR RISER POSITION SIGNAL
DRIVER SEAT HORIZONTAL POSITION SIGNAL
DRIVER SEAT RECLINER POSITION SIGNAL
DRIVER SEAT POSITION SENSOR GROUND
MEMORY SEAT/MIRROR/ ADJUSTABLE PEDALS MODULE
▲ EXCEPT EXPORT
▲▲ EXPORT

HEATED SEATS

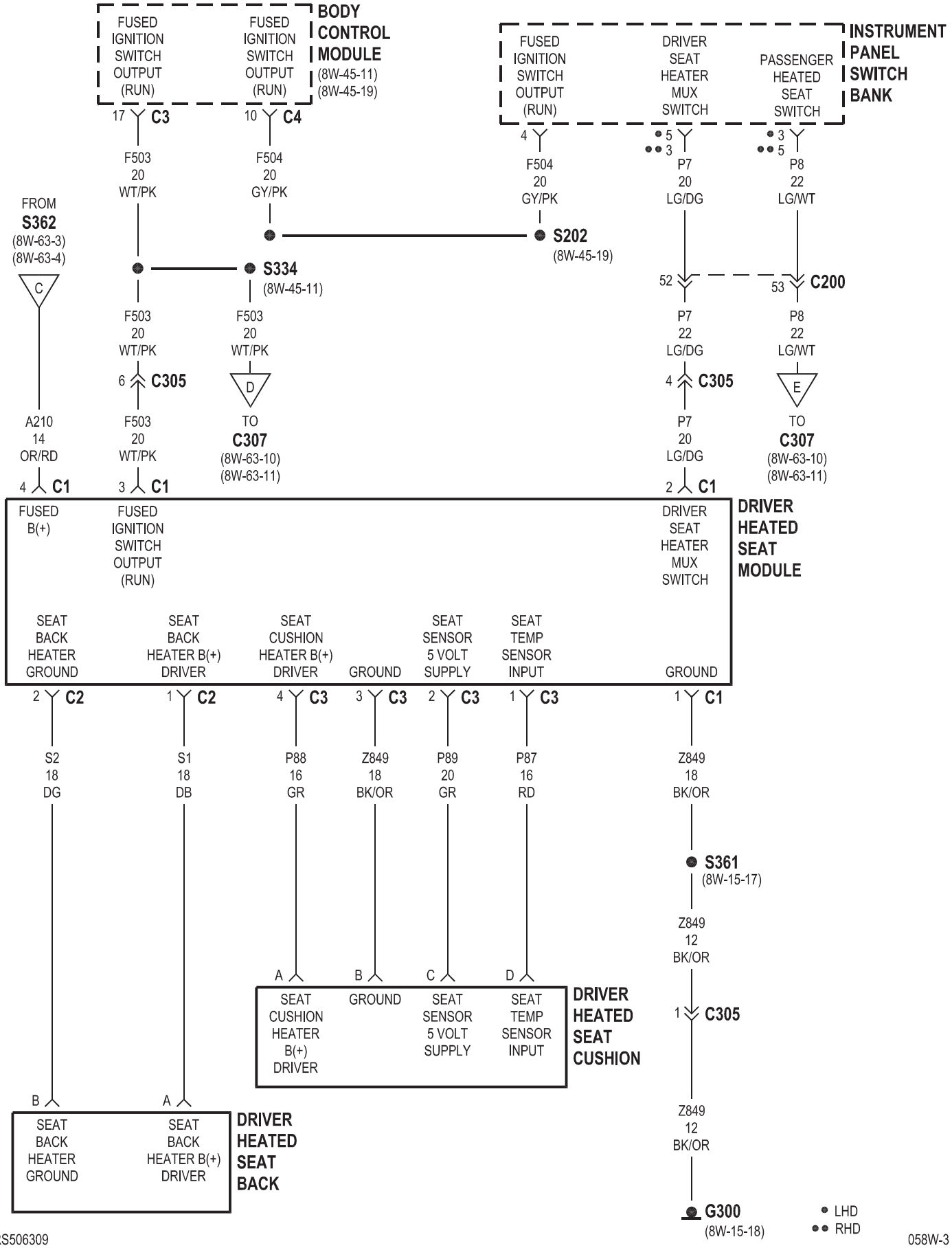

HEATED SEATS/EXCEPT EXPORT

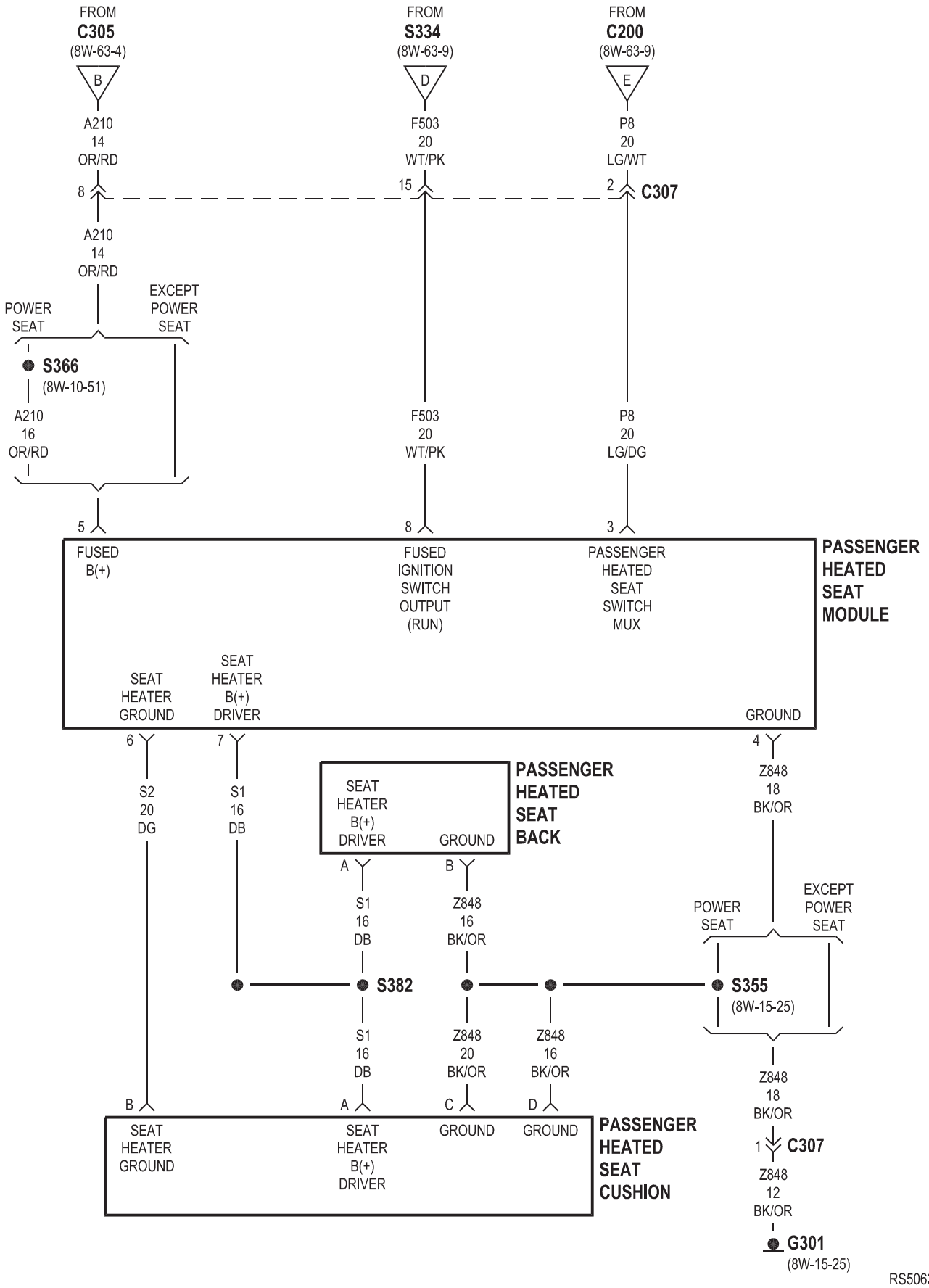

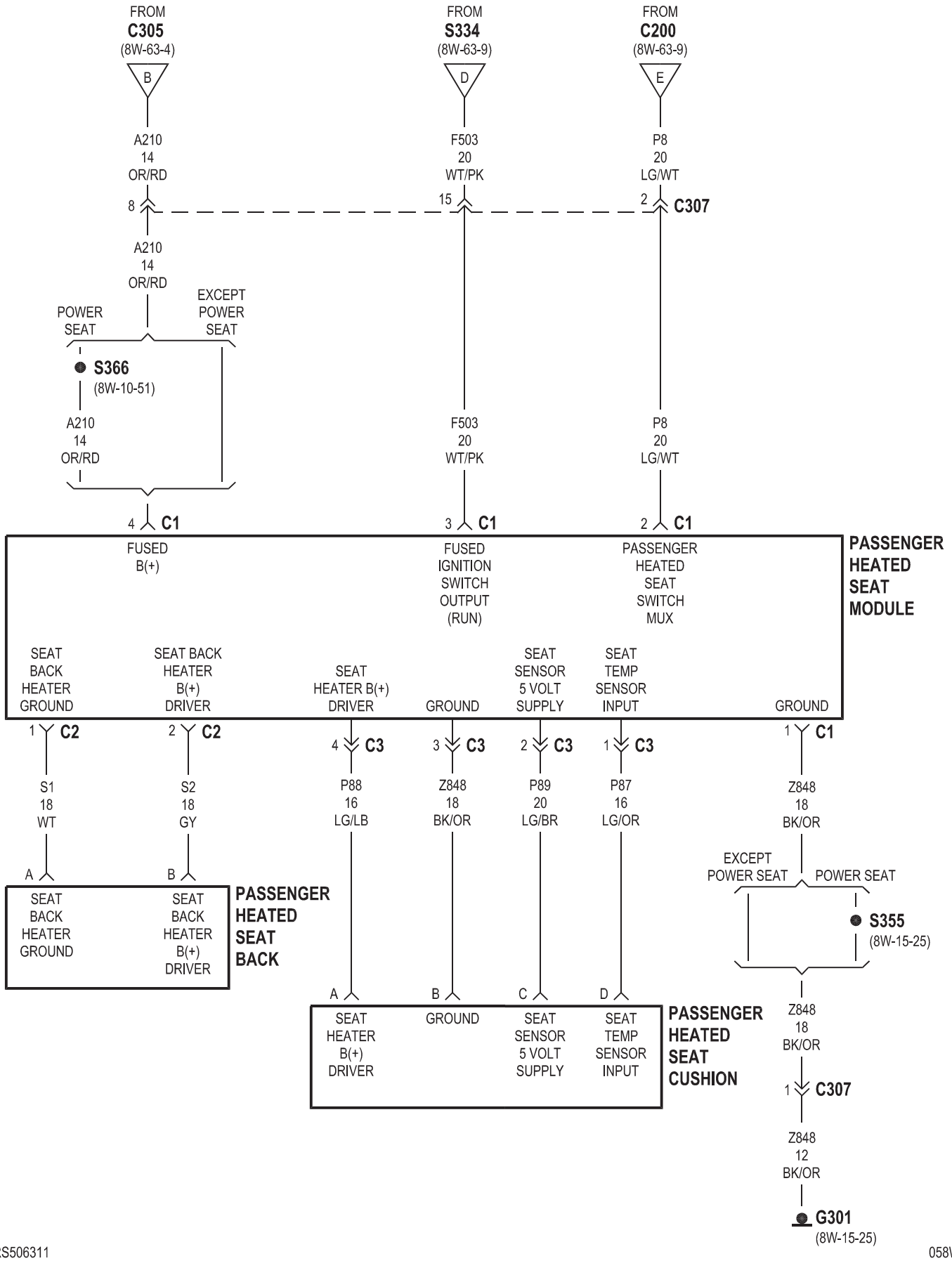
FROM C305 (8W-63-4)
B
A210 14 OR/RD
8
A210 14 OR/RD
POWER SEAT
EXCEPT POWER SEAT
S366 (8W-10-51)
A210 14 OR/RD
4 C1
FUSED B(+)
FROM S334 (8W-63-9)
D
F503 20 WT/PK
15
F503 20 WT/PK
3 C1
FUSED IGNITION SWITCH OUTPUT (RUN)
FROM C200 (8W-63-9)
E
P8 20 LG/WT
2
C307
P8 20 LG/WT
2 C1
PASSENGER HEATED SEAT SWITCH MUX
PASSENGER HEATED SEAT MODULE
SEAT BACK HEATER GROUND
SEAT BACK HEATER B(+) DRIVER
SEAT HEATER B(+) DRIVER
GROUND
SEAT SENSOR 5 VOLT SUPPLY
SEAT TEMP SENSOR INPUT
GROUND
1 C2
2 C2
4 C3
3 C3
2 C3
1 C3
1 C1
S1 18 WT
S2 18 GY
P88 16 LG/LB
Z848 18 BK/OR
P89 20 LG/BR
P87 16 LG/OR
Z848 18 BK/OR
EXCEPT POWER SEAT
POWER SEAT
S355 (8W-15-25)
A
B
SEAT BACK HEATER GROUND
SEAT BACK HEATER B(+) DRIVER
PASSENGER HEATED SEAT BACK
A
B
C
D
SEAT HEATER B(+) DRIVER
GROUND
SEAT SENSOR 5 VOLT SUPPLY
SEAT TEMP SENSOR INPUT
PASSENGER HEATED SEAT CUSHION
Z848 18 BK/OR
1 C307
Z848 12 BK/OR
G301 (8W-15-25)

8W-64 POWER SUNROOF

Component	Page
Accessory Relay	8W-64-2
Electronic Control Unit	8W-64-3
Fuse 11	8W-64-2
Fuse 32	8W-64-2
G301	8W-64-3
G302	8W-64-3
Integrated Power Module	8W-64-2
Sunroof Module	8W-64-2, 3
Sunroof Switch	8W-64-3

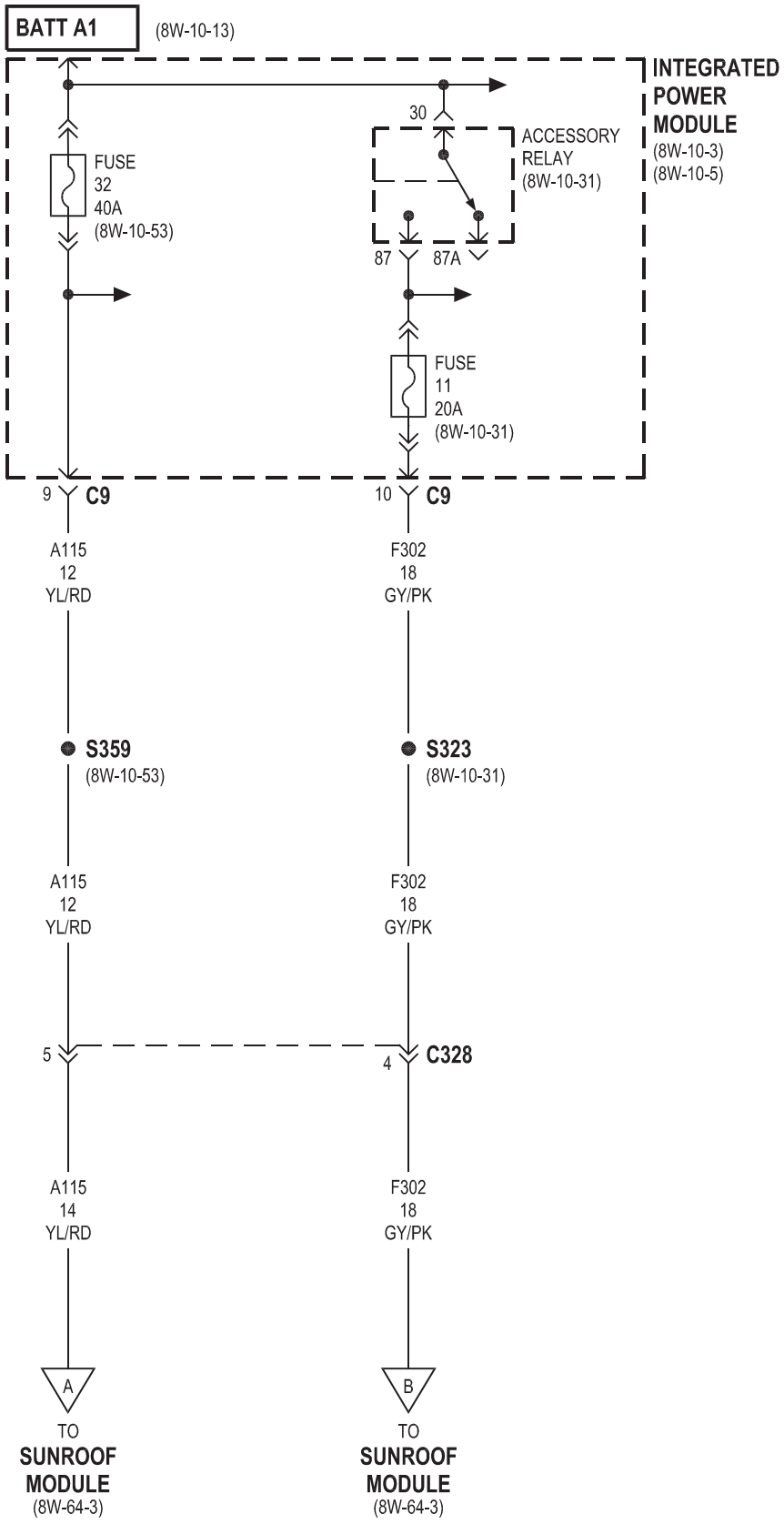
BATT A1
(8W-10-13)
INTEGRATED POWER MODULE
(8W-10-3)
(8W-10-5)
30
ACCESSORY RELAY
(8W-10-31)
FUSE
32
40A
(8W-10-53)
87
87A
FUSE
11
20A
(8W-10-31)
9
C9
10
C9
A115
12
YL/RD
F302
18
GY/PK
S359
(8W-10-53)
S323
(8W-10-31)
A115
12
YL/RD
F302
18
GY/PK
5
4
C328
A115
14
YL/RD
F302
18
GY/PK
A
B
TO
SUNROOF MODULE
(8W-64-3)
TO
SUNROOF MODULE
(8W-64-3)

EXCEPT EXPORT

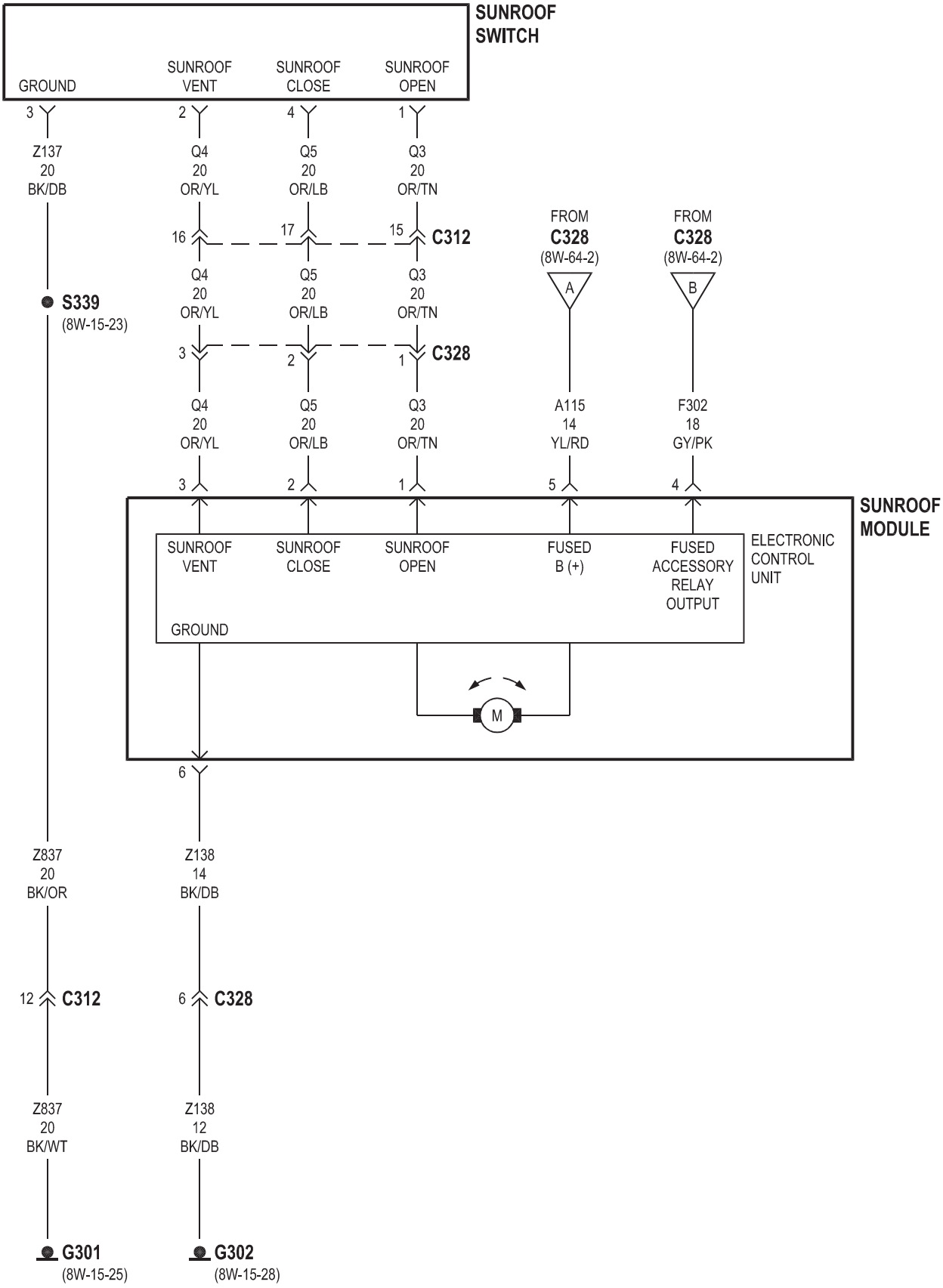

8W-70 SPLICE INFORMATION

Component	Page
S101	8W-42-20
S103	8W-18-4
S106	8W-15-2
S107	8W-10-43, 45
S111	8W-15-3, 4
S112	8W-10-42
S113	8W-70-3
S114	8W-10-41
S115	8W-31-4
S116	8W-70-2, 6
S118	8W-70-3
S119	8W-15-9
S121	8W-70-4
S122	8W-10-14
S124	8W-10-42
S125	8W-70-3
S126	8W-10-29
S127	8W-10-13
S128	8W-10-29
S129	8W-10-13
S130	8W-10-13
S131	8W-10-56
S132	8W-10-13
S134	8W-30-29
S135	8W-30-30
S136	8W-42-18
S137	8W-30-28
S139	8W-10-44
S141	8W-15-2, 4
S142	8W-70-4
S144	8W-10-44
S148	8W-70-6
S150	8W-10-67
S151	8W-42-18
S152	8W-10-63
S157	8W-30-27
S177	8W-15-19
S179	8W-15-19
S187	8W-30-22
S188	8W-10-44
S190	8W-10-13
S191	8W-31-8
S192	8W-31-9
S193	8W-31-7
S201	8W-10-40
S202	8W-45-19
S203	8W-45-17
S204	8W-10-39
S205	8W-42-9
S206	8W-10-52
S207	8W-18-6
S208	8W-45-10
S209	8W-42-7
S210	8W-10-46, 49
S211	8W-47-9
S212	8W-47-9
S222	8W-47-14
S223	8W-10-69
S224	8W-15-11
S225	8W-55-2
S226	8W-15-11
S302	8W-18-5
S303	8W-10-35
S304	8W-10-67
S305	8W-63-8
S306	8W-45-5, 6
S307	8W-63-8
S310	8W-44-2
S311	8W-42-8
S312	8W-15-17
S313	8W-10-28, 29
S316	8W-10-53
S317	8W-10-40
S318	8W-30-32
S319	8W-45-6
S321	8W-18-3, 4
S322	8W-10-31
S323	8W-10-31
S324	8W-15-28
S325	8W-10-32
S326	8W-10-45, 49
S330	8W-39-13
S331	8W-15-26
S332	8W-42-8
S333	8W-42-8
S334	8W-45-11
S335	8W-45-9
S336	8W-44-3
S337	8W-15-23
S338	8W-45-13
S339	8W-15-23
S342	8W-15-21
S343	8W-15-15
S344	8W-39-8
S345	8W-15-20
S346	8W-10-33, 34
S347	8W-15-20
S348	8W-15-14
S349	8W-39-8
S350	8W-15-14
S352	8W-15-26
S354	8W-10-29
S355	8W-15-25
S356	8W-10-52
S359	8W-10-53
S361	8W-15-17
S362	8W-10-50
S363	8W-15-9
S364	8W-15-21
S365	8W-15-16
S366	8W-10-51
S367	8W-10-67
S368	8W-10-49
S370	8W-10-47
S371	8W-15-15
S373	8W-10-69
S374	8W-70-3, 5
S376	8W-10-32
S378	8W-10-50
S380	8W-10-50
S381	8W-15-27
S382	8W-63-10
S383	8W-56-6
S384	8W-56-5

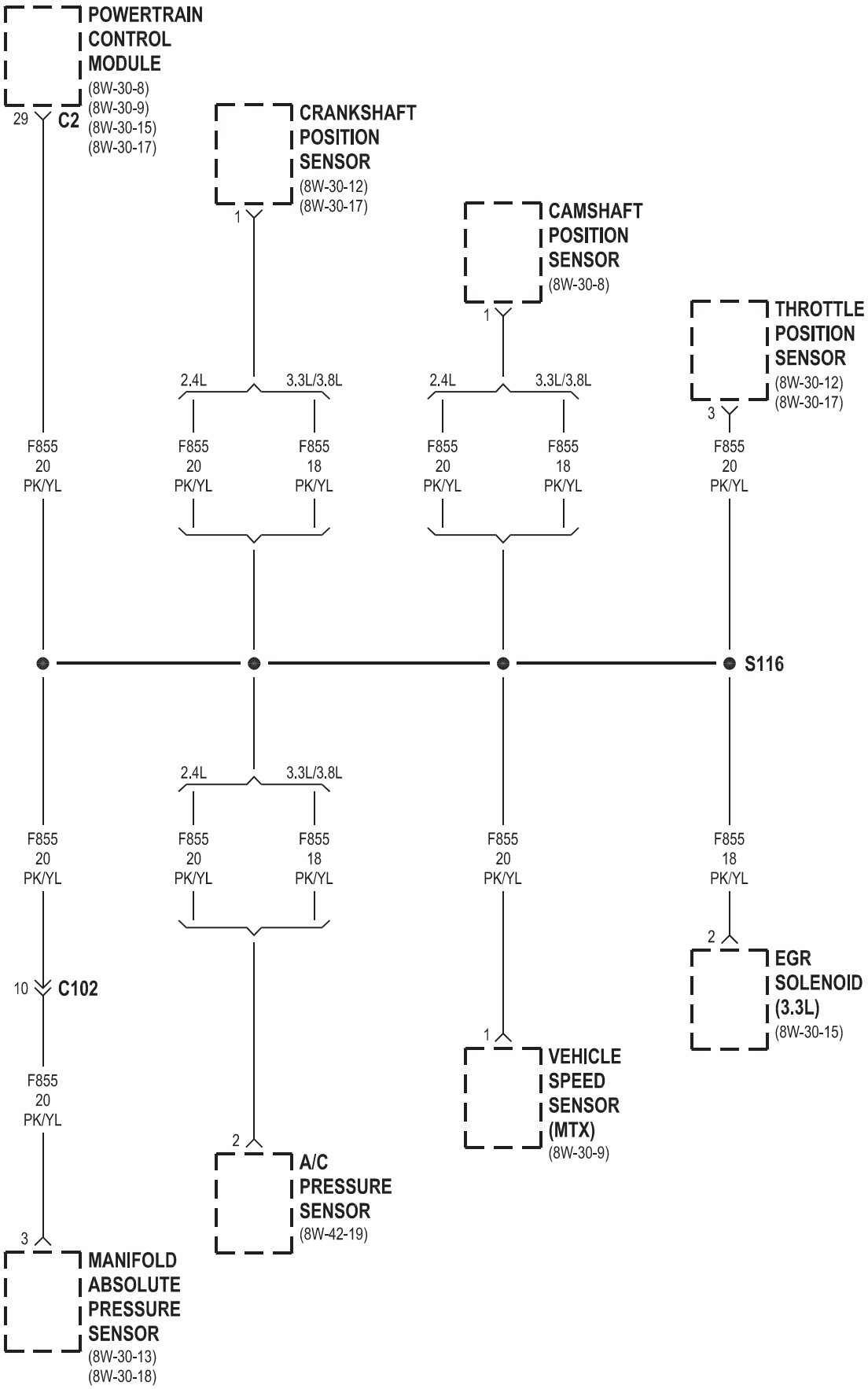
POWERTRAIN CONTROL MODULE
(8W-30-8)
(8W-30-9)
(8W-30-15)
(8W-30-17)
29 C2
CRANKSHAFT POSITION SENSOR
(8W-30-12)
(8W-30-17)
1
CAMSHAFT POSITION SENSOR
(8W-30-8)
1
THROTTLE POSITION SENSOR
(8W-30-12)
(8W-30-17)
3
2.4L
3.3L/3.8L
F855 20 PK/YL
F855 18 PK/YL
S116
10 C102
2 A/C PRESSURE SENSOR
(8W-42-19)
3 MANIFOLD ABSOLUTE PRESSURE SENSOR
(8W-30-13)
(8W-30-18)
1 VEHICLE SPEED SENSOR (MTX)
(8W-30-9)
2 EGR SOLENOID (3.3L)
(8W-30-15)

2.4L

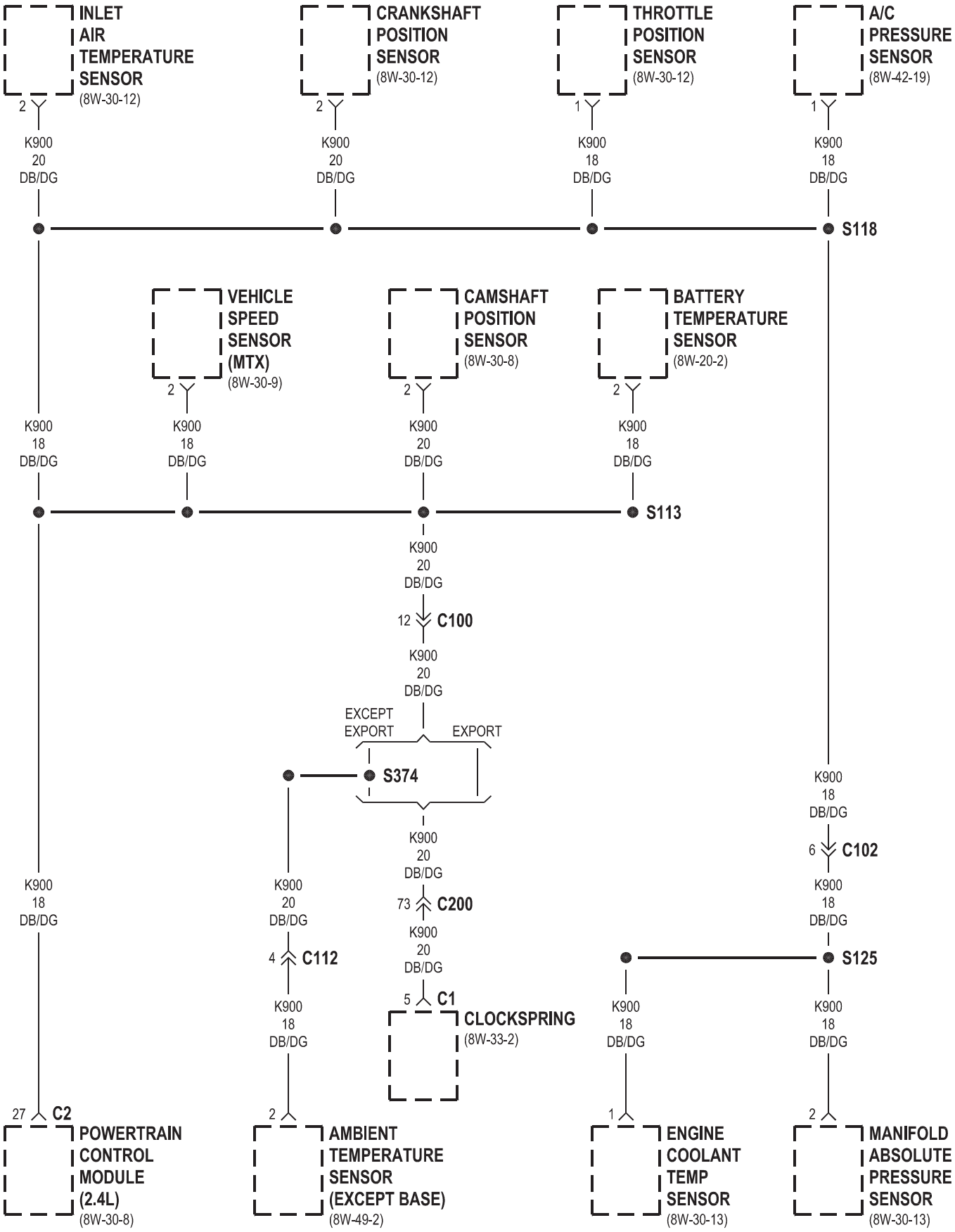
INLET AIR TEMPERATURE SENSOR (8W-30-12)
2
K900 20 DB/DG
CRANKSHAFT POSITION SENSOR (8W-30-12)
2
K900 20 DB/DG
THROTTLE POSITION SENSOR (8W-30-12)
1
K900 18 DB/DG
A/C PRESSURE SENSOR (8W-42-19)
1
K900 18 DB/DG
S118
VEHICLE SPEED SENSOR (MTX) (8W-30-9)
2
K900 18 DB/DG
CAMSHAFT POSITION SENSOR (8W-30-8)
2
K900 20 DB/DG
BATTERY TEMPERATURE SENSOR (8W-20-2)
2
K900 18 DB/DG
S113
K900 18 DB/DG
K900 20 DB/DG
12 C100
K900 20 DB/DG
EXCEPT EXPORT
EXPORT
S374
K900 20 DB/DG
73 C200
K900 20 DB/DG
5 C1
CLOCKSPRING (8W-33-2)
K900 18 DB/DG
6 C102
K900 18 DB/DG
S125
K900 18 DB/DG
K900 20 DB/DG
4 C112
K900 18 DB/DG
K900 18 DB/DG
K900 18 DB/DG
27 C2
POWERTRAIN CONTROL MODULE (2.4L) (8W-30-8)
2
AMBIENT TEMPERATURE SENSOR (EXCEPT BASE) (8W-49-2)
1
ENGINE COOLANT TEMP SENSOR (8W-30-13)
2
MANIFOLD ABSOLUTE PRESSURE SENSOR (8W-30-13)

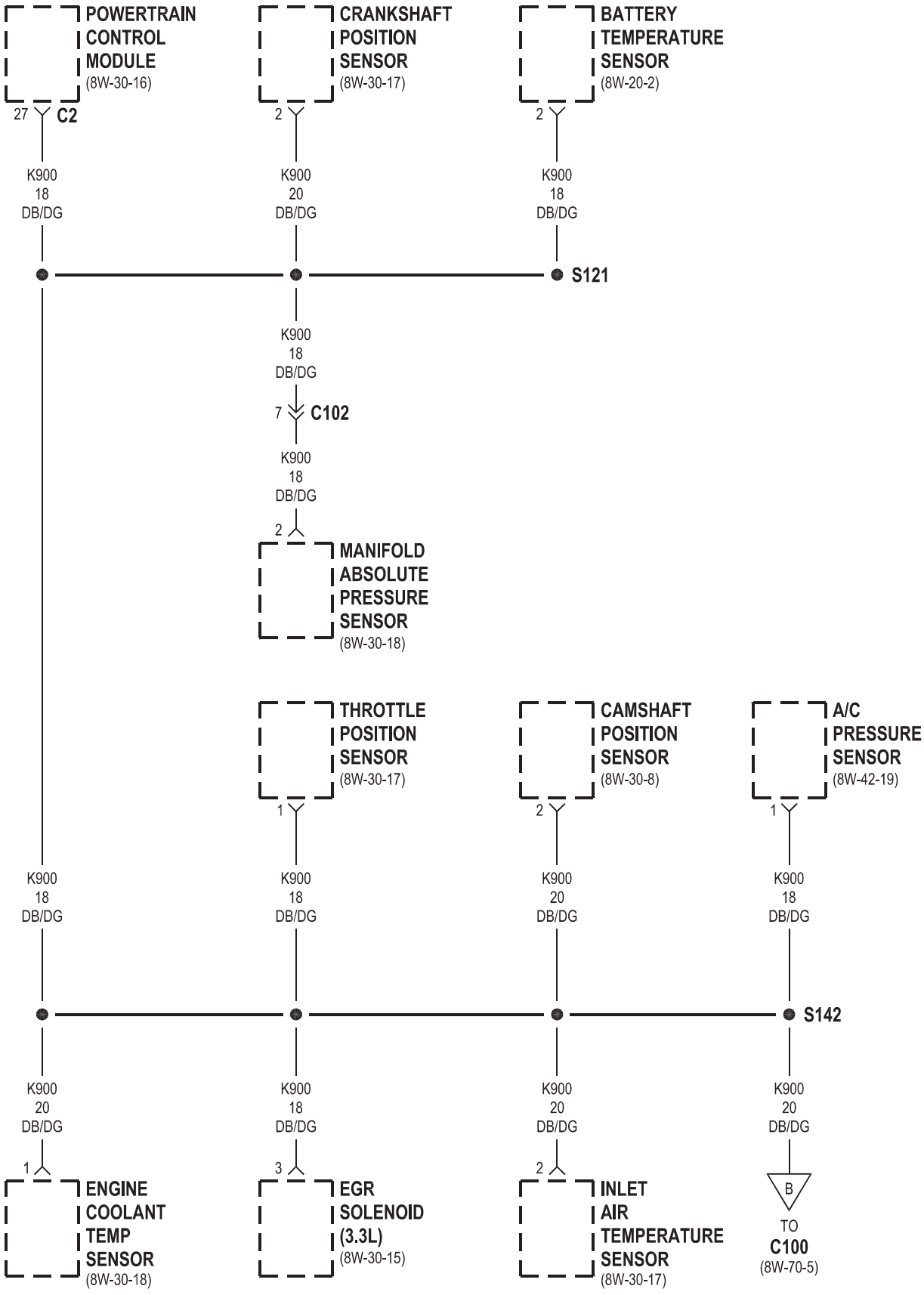
POWERTRAIN CONTROL MODULE
(8W-30-16)
27 C2
CRANKSHAFT POSITION SENSOR
(8W-30-17)
2
BATTERY TEMPERATURE SENSOR
(8W-20-2)
2
K900 18 DB/DG
K900 20 DB/DG
K900 18 DB/DG
S121
K900 18 DB/DG
7 C102
K900 18 DB/DG
2
MANIFOLD ABSOLUTE PRESSURE SENSOR
(8W-30-18)
THROTTLE POSITION SENSOR
(8W-30-17)
1
CAMSHAFT POSITION SENSOR
(8W-30-8)
2
A/C PRESSURE SENSOR
(8W-42-19)
1
K900 18 DB/DG
K900 18 DB/DG
K900 20 DB/DG
K900 18 DB/DG
S142
K900 20 DB/DG
K900 18 DB/DG
K900 20 DB/DG
K900 20 DB/DG
1
3
2
B
ENGINE COOLANT TEMP SENSOR
(8W-30-18)
EGR SOLENOID (3.3L)
(8W-30-15)
INLET AIR TEMPERATURE SENSOR
(8W-30-17)
TO C100
(8W-70-5)

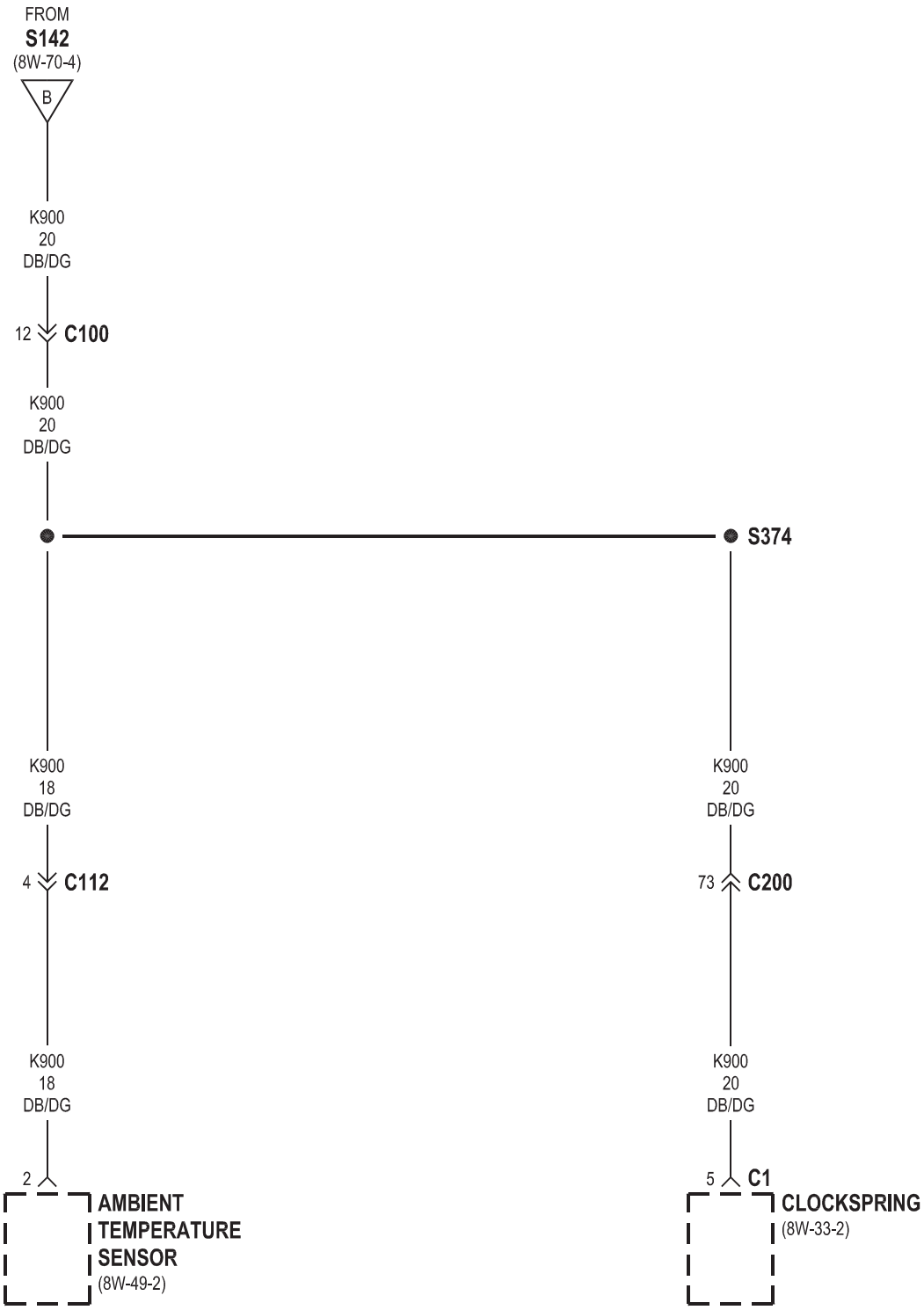
FROM
S142
(8W-70-4)
B
K900
20
DB/DG
12
C100
K900
20
DB/DG
S374
K900
18
DB/DG
4
C112
K900
18
DB/DG
2
AMBIENT
TEMPERATURE
SENSOR
(8W-49-2)
K900
20
DB/DG
73
C200
K900
20
DB/DG
5
C1
CLOCKSPRING
(8W-33-2)

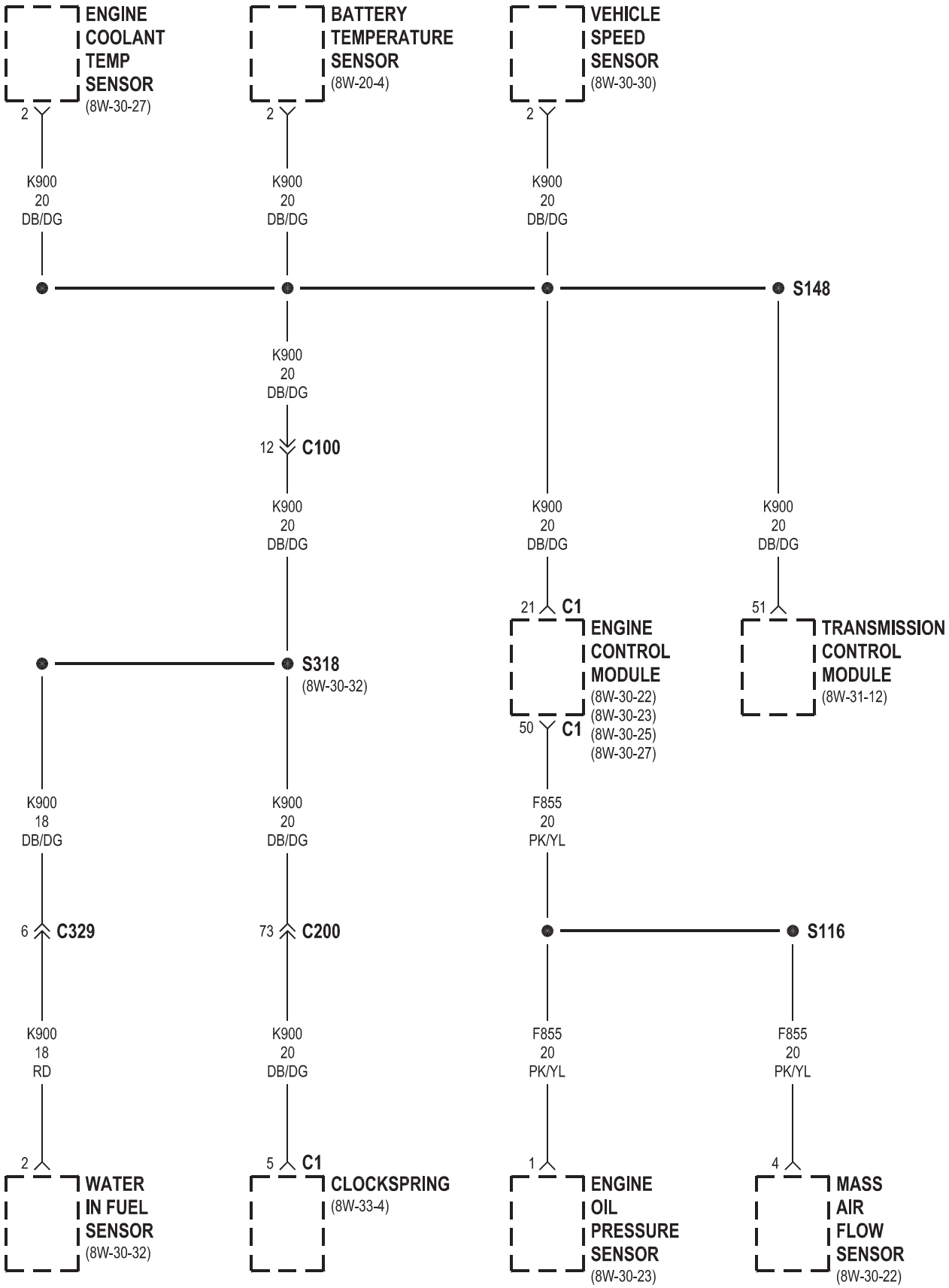
ENGINE COOLANT TEMP SENSOR (8W-30-27)
BATTERY TEMPERATURE SENSOR (8W-20-4)
VEHICLE SPEED SENSOR (8W-30-30)
2
K900 20 DB/DG
S148
12 C100
21 C1
ENGINE CONTROL MODULE (8W-30-22) (8W-30-23) (8W-30-25) (8W-30-27)
50 C1
51
TRANSMISSION CONTROL MODULE (8W-31-12)
S318 (8W-30-32)
K900 18 DB/DG
F855 20 PK/YL
6 C329
73 C200
S116
K900 18 RD
1
4
WATER IN FUEL SENSOR (8W-30-32)
5 C1
CLOCKSPRING (8W-33-4)
ENGINE OIL PRESSURE SENSOR (8W-30-23)
MASS AIR FLOW SENSOR (8W-30-22)

8W-80 CONNECTOR PIN-OUTS

Component	Page
A/C Compressor Clutch	8W-80-6
A/C Pressure Sensor	8W-80-6
A/C-Heater Control C1 (MTC)	8W-80-6
A/C-Heater Control C2 (MTC)	8W-80-7
Accelerator Pedal Position Sensor (Diesel)	8W-80-7
Adjustable Pedals Motor (Except Export)	8W-80-7
Adjustable Pedals Relay (Except Export/Except Memory)	8W-80-8
Adjustable Pedals Sensor (Except Export)	8W-80-8
Adjustable Pedals Switch (Except Export)	8W-80-8
Ambient Temperature Sensor	8W-80-8
Amplifier C1 (Highline Audio)	8W-80-9
Amplifier C2 (Highline Audio)	8W-80-9
ATC Remote Sensor (ATC)	8W-80-10
Auto Temp Control C1	8W-80-10
Auto Temp Control C2	8W-80-10
Auto Temp Control C3	8W-80-11
Back-Up Lamp Switch (MTX)	8W-80-11
Battery Temperature Sensor	8W-80-11
Belt Tension Sensor (Occupant Sensing)	8W-80-11
Blower Motor Resistor C1 (MTC)	8W-80-12
Blower Motor Resistor C2 (MTC)	8W-80-12
Body Control Module C1	8W-80-12
Body Control Module C2	8W-80-13
Body Control Module C3	8W-80-14
Body Control Module C4	8W-80-15
Body Control Module C5	8W-80-16
Boost Pressure Sensor (Diesel)	8W-80-16
Brake Fluid Level Switch	8W-80-17
Brake Lamp Switch	8W-80-17
Brake Transmission Shift Interlock Solenoid	8W-80-17
C100	8W-80-17
C100	8W-80-18
C101 (Diesel)	8W-80-18
C101 (Diesel)	8W-80-19
C101 (Gas)	8W-80-19
C101 (Gas)	8W-80-19
C102 (Gas)	8W-80-19
C102 (Gas)	8W-80-20
C103 (Diesel)	8W-80-20
C103 (Diesel)	8W-80-20
C104 (Except Export)	8W-80-20
C104 (Except Export)	8W-80-21
C106 (Export)	8W-80-21
C106 (Export)	8W-80-21
C107 (Export)	8W-80-21
C107 (Export)	8W-80-22
C111 (EATX)	8W-80-22
C111 (EATX)	8W-80-22
C112 (Gas)	8W-80-22
C112 (Gas)	8W-80-22
C200	8W-80-23
C200	8W-80-25
C202	8W-80-27
C202	8W-80-27
C204 (Premium)	8W-80-27
C204 (Premium)	8W-80-28
C206 (Except Base)	8W-80-28
C206 (Except Base)	8W-80-28
C207 (DVD)	8W-80-28
C207 (Hands Free)	8W-80-29
C300 (LHD)	8W-80-29
C300 (LHD)	8W-80-29
C300 (RHD)	8W-80-30
C300 (RHD)	8W-80-30
C301 (Luxury/Export)	8W-80-30
C301 (Luxury/Export)	8W-80-30
C302 (Export)	8W-80-31
C302 (Export)	8W-80-31
C302 (Luxury/Except Export)	8W-80-31
C302 (Luxury/Except Export)	8W-80-31
C303 (LHD)	8W-80-32
C303 (LHD)	8W-80-32
C303 (RHD)	8W-80-32
C303 (RHD)	8W-80-33
C304 (LHD)	8W-80-33
C304 (LHD)	8W-80-33
C305	8W-80-33
C305	8W-80-34
C306 (RHD)	8W-80-34
C306 (RHD)	8W-80-34
C307	8W-80-34
C307	8W-80-35
C308 (Except Side Airbag)	8W-80-35
C308 (Side Airbag)	8W-80-35
C308 (Except Side Airbag)	8W-80-36
C308 (Side Airbag)	8W-80-36
C309 (Side Airbag)	8W-80-36
C309 (Side Airbag)	8W-80-37
C309 (Except Side Airbag)	8W-80-37
C309 (Except Side Airbag)	8W-80-37
C310 (Front Console)	8W-80-38
C310 (Front Console)	8W-80-38
C311 (3 Zone HVAC/Except Side Airbag)	8W-80-38
C311 (3 Zone HVAC/Except Side Airbag)	8W-80-38
C311 (3 Zone HVAC/Side Airbag)	8W-80-39

Component	Page
C311 (3 Zone HVAC/Side Airbag)	8W-80-39
C312 (Side Airbag)	8W-80-40
C312 (Except Side Airbag)	8W-80-40
C312 (Except Side Airbag)	8W-80-41
C312 (Side Airbag)	8W-80-41
C313 (Rear Console)	8W-80-42
C313 (Rear Console)	8W-80-42
C314	8W-80-42
C314	8W-80-43
C315 (Power Liftgate)	8W-80-43
C315 (Power Liftgate)	8W-80-43
C316 (Power Sliding Door)	8W-80-44
C316 (Power Sliding Door)	8W-80-44
C317 (Power Sliding Door)	8W-80-44
C317 (Power Sliding Door)	8W-80-45
C318 (Trailer Tow)	8W-80-45
C318 (Trailer Tow)	8W-80-45
C319 (Trailer Tow)	8W-80-46
C319 (Trailer Tow)	8W-80-46
C320	8W-80-46
C320	8W-80-46
C321	8W-80-47
C321	8W-80-47
C322 (Memory)	8W-80-47
C322 (Memory)	8W-80-48
C324 (Manual Sliding Door)	8W-80-48
C324 (Manual Sliding Door)	8W-80-48
C325 (Manual Sliding Door)	8W-80-49
C325 (Manual Sliding Door)	8W-80-49
C328 (Sunroof)	8W-80-49
C328 (Sunroof)	8W-80-49
C329 (Diesel)	8W-80-50
C329 (Diesel)	8W-80-50
C330 (Diesel)	8W-80-50
C330 (Diesel)	8W-80-50
C331 (Diesel)	8W-80-51
C331 (Diesel)	8W-80-51
C332 (3 Zone ATC)	8W-80-51
C332 (3 Zone ATC)	8W-80-51
C333 (Except Export/Except Memory)	8W-80-52
C333 (Except Export/Except Memory)	8W-80-52
C334	8W-80-52
C334	8W-80-52
C335 (Fold-In-Floor)	8W-80-53
C335 (Fold-In-Floor)	8W-80-53
Cabin Heater Assist C1 (Diesel)	8W-80-53
Cabin Heater Assist C2 (Diesel)	8W-80-53
Camshaft Position Sensor (Diesel)	8W-80-53
Camshaft Position Sensor (Gas)	8W-80-54
CD Changer	8W-80-54
Center High Mounted Stop Lamp	8W-80-54
Clockspring C1	8W-80-54
Clockspring C2	8W-80-55
Clockspring C3	8W-80-55
Clockspring C4 (Remote Audio)	8W-80-55
Clutch Pedal Interlock Switch (MTX)	8W-80-55
Clutch Pedal Upstop Switch (Diesel)	8W-80-56
Controller Antilock Brake	8W-80-56
Crank Case Ventilation Heater (Diesel)	8W-80-57
Crankshaft Position Sensor (Diesel)	8W-80-57
Crankshaft Position Sensor (Gas)	8W-80-57
Data Link Connector	8W-80-57
Dosing Pump (Diesel)	8W-80-58
Driver Airbag Squib 1	8W-80-58
Driver Airbag Squib 2	8W-80-58
Driver Blend Door Actuator	8W-80-58
Driver Door Courtesy Lamp (Luxury/ Export)	8W-80-59
Driver Door Lock Switch	8W-80-59
Driver Heated Seat Back	8W-80-59
Driver Heated Seat Cushion	8W-80-59
Driver Heated Seat Module C1	8W-80-59
Driver Heated Seat Module C2	8W-80-60
Driver Heated Seat Module C3	8W-80-60
Driver Knee Blocker Airbag Squib (LHD)	8W-80-60
Driver Power Seat Front Riser Motor	8W-80-60
Driver Power Seat Front Riser Position Sensor	8W-80-61
Driver Power Seat Horizontal Motor	8W-80-61
Driver Power Seat Horizontal Position Sensor	8W-80-61
Driver Power Seat Rear Riser Motor	8W-80-61
Driver Power Seat Rear Riser Position Sensor	8W-80-62
Driver Power Seat Recliner Motor	8W-80-62
Driver Power Seat Recliner Position Sensor	8W-80-62
Driver Power Seat Switch	8W-80-62
Driver Power Window Motor	8W-80-63
Driver Power Window Switch (LHD Except Lowline)	8W-80-63
Driver Power Window Switch (LHD Lowline)	8W-80-63
Driver Power Window Switch (RHD)	8W-80-64
Driver Seat Belt Switch	8W-80-64
Driver Seat Belt Tensioner	8W-80-64
DVD Screen	8W-80-65
DVD/CD Changer C1	8W-80-65
DVD/CD Changer C2	8W-80-65
EGR Solenoid (3.3L)	8W-80-66
EGR Solenoid (Diesel)	8W-80-66
Engine Control Module C1 (Diesel)	8W-80-66
Engine Control Module C2 (Diesel)	8W-80-68
Engine Coolant Temp Sensor (Diesel)	8W-80-69
Engine Coolant Temp Sensor (Gas)	8W-80-69
Engine Oil Pressure Sensor (Diesel)	8W-80-69
Engine Oil Pressure Switch (Gas)	8W-80-69
EVAP/Purge Solenoid (Gas)	8W-80-70

Component	Page
Evaporator Temperature Sensor	8W-80-70
Floor Console Lamp	8W-80-70
Floor Console Power Outlet (Export)	8W-80-70
Front Blower Module C1 (ATC)	8W-80-71
Front Blower Module C2 (ATC)	8W-80-71
Front Cigar Lighter	8W-80-71
Front Control Module	8W-80-72
Front Intrusion Sensor (United Kingdom)	8W-80-73
Front Reading Lamps/Switch	8W-80-73
Fuel Heater (Diesel)	8W-80-73
Fuel Injector No. 1 (2.4L/3.3L/3.8L)	8W-80-73
Fuel Injector No. 1 (Diesel)	8W-80-73
Fuel Injector No. 2 (2.4L/3.3L/3.8L)	8W-80-74
Fuel Injector No. 2 (Diesel)	8W-80-74
Fuel Injector No. 3 (2.4L/3.3L/3.8L)	8W-80-74
Fuel Injector No. 3 (Diesel)	8W-80-74
Fuel Injector No. 4 (2.4L/3.3L/3.8L)	8W-80-75
Fuel Injector No. 4 (Diesel)	8W-80-75
Fuel Injector No. 5 (3.3L/3.8L)	8W-80-75
Fuel Injector No. 6 (3.3L/3.8L)	8W-80-75
Fuel Pressure Sensor (Diesel)	8W-80-76
Fuel Pressure Solenoid (Diesel)	8W-80-76
Fuel Pump Module	8W-80-76
Generator	8W-80-76
Glow Plug Relay (Diesel)	8W-80-77
Hands Free Module C1	8W-80-77
Hands Free Module C2	8W-80-77
Hands Free Module C3	8W-80-78
Headlamp Switch	8W-80-78
Headlamp Washer Pump Motor (Export)	8W-80-78
High Note Horn	8W-80-79
Hood Ajar Switch (Export)	8W-80-79
Idle Air Control Motor (Gas)	8W-80-79
Ignition Coil (2.4L)	8W-80-79
Ignition Coil (3.3L/3.8L)	8W-80-80
Ignition Switch	8W-80-80
Inlet Air Temperature Sensor	8W-80-80
Input Speed Sensor	8W-80-80
Instrument Cluster	8W-80-81
Instrument Panel Switch Bank (Except Heated Seats)	8W-80-81
Instrument Panel Switch Bank (Heated Seats)	8W-80-81
Integrated Power Module C1	8W-80-82
Integrated Power Module C2	8W-80-82
Integrated Power Module C3	8W-80-83
Integrated Power Module C4	8W-80-83
Integrated Power Module C5	8W-80-84
Integrated Power Module C6	8W-80-84
Integrated Power Module C7	8W-80-84
Integrated Power Module C8	8W-80-85
Integrated Power Module C9	8W-80-85
Knock Sensor (Except Export)	8W-80-85
Left B-Pillar Switch (Power Sliding Door)	8W-80-86
Left Cinch/Release Motor (Power Sliding Door)	8W-80-86
Left Curtain Airbag Squib	8W-80-86
Left Cylinder Lock Switch (Export)	8W-80-86
Left Door Speaker	8W-80-87
Left Fog Lamp	8W-80-87
Left Front Door Ajar Switch (Base)	8W-80-87
Left Front Door Lock Motor/Ajar Switch (Except Base)	8W-80-87
Left Front Impact Sensor (Export)	8W-80-87
Left Front Impact Sensor (Except Export)	8W-80-88
Left Front Park/Turn Signal Lamp	8W-80-88
Left Front Wheel Speed Sensor	8W-80-88
Left Full Open Switch (Power Sliding Door)	8W-80-88
Left Headlamp (Caravan/Voyager Except Export)	8W-80-89
Left Headlamp (Town And Country)	8W-80-89
Left Headlamp Leveling Motor (Export)	8W-80-89
Left High Beam Lamp (Export)	8W-80-89
Left Instrument Panel Speaker	8W-80-90
Left Liftgate Flood Lamp (Export)	8W-80-90
Left Low Beam Lamp (Export)	8W-80-90
Left Mid Reading Lamp (Premium/ Luxury)	8W-80-90
Left Park Lamp (Export)	8W-80-91
Left Power Mirror	8W-80-91
Left Rear Lamp Assembly	8W-80-91
Left Rear Pillar Speaker (Highline Audio)	8W-80-92
Left Rear Reading Lamp (Luxury)	8W-80-92
Left Rear Speaker	8W-80-92
Left Rear Vent Motor	8W-80-92
Left Rear Wheel Speed Sensor	8W-80-93
Left Remote Radio Switch	8W-80-93
Left Repeater Lamp (Export)	8W-80-93
Left Side Impact Sensor 1 (Export)	8W-80-93
Left Side Impact Sensor 1 (Except Export)	8W-80-94
Left Side Impact Sensor 2	8W-80-94
Left Side Impact Sensor 3	8W-80-94
Left Sliding Door Control Module C1 (Power Sliding Door)	8W-80-94
Left Sliding Door Control Module C2 (Power Sliding Door)	8W-80-95
Left Sliding Door Latch Sensing Switch (Power Sliding Door)	8W-80-95
Left Sliding Door Lock Motor (Power Sliding Door)	8W-80-95
Left Sliding Door Lock Motor/Ajar Switch (Manual Sliding Door)	8W-80-96

Component	Page
Left Sliding Door Motor (Power Sliding Door)	8W-80-96
Left Speed Control Switch	8W-80-96
Left Turn Signal Lamp (Export)	8W-80-96
Left Visor/Vanity Lamp (Premium/Luxury Except Export)	8W-80-97
License Lamp (Manual Release)	8W-80-97
License Lamp (Power Liftgate)	8W-80-97
License Lamp (Power Release)	8W-80-97
Lift Pump Motor (Diesel)	8W-80-98
Liftgate Ajar Switch (Manual Release)	8W-80-98
Liftgate Ajar Switch (Power Release)	8W-80-98
Liftgate Cinch/Release Motor (Power Liftgate)	8W-80-98
Liftgate Left Pinch Sensor (Power Liftgate)	8W-80-99
Liftgate Right Pinch Sensor (Power Liftgate)	8W-80-99
Manifold ABSolute Pressure Sensor (Gas)	8W-80-99
Mass Air Flow Sensor (Diesel)	8W-80-99
Memory Seat/Mirror/Adjustable Pedals Module C1	8W-80-100
Memory Seat/Mirror/Adjustable Pedals Module C2	8W-80-100
Memory Seat/Mirror/Adjustable Pedals Module C3	8W-80-101
Memory Seat/Mirror/Adjustable Pedals Module C4	8W-80-101
Memory Set Switch	8W-80-101
Message Center (Export)	8W-80-101
Mode Door Actuator	8W-80-102
Multi-Function Switch	8W-80-102
Natural Vacuum Leak Detection Assembly (Except Export)	8W-80-102
Occupant Classification Module	8W-80-102
Occupant Restraint Controller C1	8W-80-103
Occupant Restraint Controller C2	8W-80-104
Output Speed Sensor	8W-80-104
Overhead Console (Except Base)	8W-80-105
Oxygen Sensor 1/1 Upstream (Gas)	8W-80-105
Oxygen Sensor 1/2 Downstream (Gas)	8W-80-105
Park Assist Display	8W-80-105
Park Assist Module	8W-80-106
Park Assist Sensor No. 1	8W-80-106
Park Assist Sensor No. 2	8W-80-106
Park Assist Sensor No. 3	8W-80-107
Park Assist Sensor No. 4	8W-80-107
Passenger Airbag	8W-80-107
Passenger Airbag On/Off Indicator Lamp	8W-80-107
Passenger Blend Door Actuator	8W-80-107
Passenger Door Courtesy Lamp (Luxury/Export)	8W-80-108
Passenger Door Lock Switch	8W-80-108
Passenger Folding Mirror Relay (Export)	8W-80-108
Passenger Heated Seat Back	8W-80-108
Passenger Heated Seat Cushion	8W-80-109
Passenger Heated Seat Module (Except Export)	8W-80-109
Passenger Heated Seat Module C1 (Export)	8W-80-109
Passenger Heated Seat Module C2 (Export)	8W-80-109
Passenger Heated Seat Module C3 (Export)	8W-80-110
Passenger Power Seat Front Riser Motor	8W-80-110
Passenger Power Seat Horizontal Motor	8W-80-110
Passenger Power Seat Rear Riser Motor	8W-80-110
Passenger Power Seat Recliner Motor	8W-80-111
Passenger Power Seat Switch	8W-80-111
Passenger Power Window Motor	8W-80-111
Passenger Power Window Switch	8W-80-111
Passenger Seat Belt Switch (Occupant Sensing)	8W-80-112
Passenger Seat Belt Tensioner	8W-80-112
Passenger Seat Weight Sensor	8W-80-112
Power Folding Mirror Switch (Export)	8W-80-113
Power Liftgate Module C1	8W-80-113
Power Liftgate Module C2	8W-80-113
Power Liftgate Motor	8W-80-114
Power Mirror Switch	8W-80-114
Power Outlet (Except Lowline)	8W-80-114
Power Seat Circuit Breaker (30A)	8W-80-115
Power Window Circuit Breaker (25A)	8W-80-115
Power Window Switch (LHD Lowline)	8W-80-115
Powertrain Control Module C1	8W-80-116
Powertrain Control Module C2	8W-80-117
Powertrain Control Module C3	8W-80-118
Powertrain Control Module C4	8W-80-119
Radiator Fan No. 1 (Diesel)	8W-80-120
Radiator Fan No. 1 (Gas)	8W-80-120
Radiator Fan No. 2 (Diesel)	8W-80-120
Radiator Fan No. 2 (Gas)	8W-80-120
Radiator Fan Relay (Gas)	8W-80-121
Radiator Fan Relay No. 1 (Diesel)	8W-80-121
Radiator Fan Relay No. 2 (Diesel)	8W-80-121
Radiator Fan Relay No. 3 (Diesel)	8W-80-122
Radio C1	8W-80-122
Radio C2 (CD Changer)	8W-80-123
Radio C2 (DVD/CD Changer)	8W-80-123
Radio C2 (Hands Free)	8W-80-123
Rear A/C-Heater Unit (3 Zone MTC)	8W-80-124
Rear Auto Temp Control Switch (3 Zone ATC)	8W-80-124

Component	Page
Rear Blower Front Control Switch (3 Zone MTC)	8W-80-124
Rear Blower Motor Power Module C1 (3 Zone ATC)	8W-80-125
Rear Blower Motor Power Module C2 (3 Zone ATC)	8W-80-125
Rear Blower Rear Control Switch C1 (3 Zone MTC)	8W-80-125
Rear Blower Rear Control Switch C2 (3 Zone MTC)	8W-80-125
Rear Dome Lamp (Except Luxury)	8W-80-126
Rear Intrusion Sensor (United Kingdom)	8W-80-126
Rear Mode Motor (3 Zone ATC)	8W-80-126
Rear Power Outlet	8W-80-126
Rear Temperature Motor (3 Zone ATC)	8W-80-127
Rear View Mirror C1 (Luxury)	8W-80-127
Rear View Mirror C2 (Hands Free)	8W-80-127
Rear Wiper Motor	8W-80-128
Recirculation Door Actuator	8W-80-128
Right B-Pillar Switch (Power Sliding Door)	8W-80-128
Right Cinch/Release Motor (Power Sliding Door)	8W-80-128
Right Curtain Airbag Squib	8W-80-129
Right Cylinder Lock Switch (Export)	8W-80-129
Right Door Speaker	8W-80-129
Right Fog Lamp	8W-80-129
Right Front Door Ajar Switch (Base)	8W-80-130
Right Front Door Lock Motor/Ajar Switch (Except Base)	8W-80-130
Right Front Impact Sensor	8W-80-130
Right Front Park/Turn Signal Lamp	8W-80-130
Right Front Wheel Speed Sensor	8W-80-131
Right Full Open Switch (Power Sliding Door)	8W-80-131
Right Headlamp (Caravan/Voyager Except Export)	8W-80-131
Right Headlamp (Town And Country)	8W-80-131
Right Headlamp Leveling Motor (Export)	8W-80-132
Right High Beam Lamp (Export)	8W-80-132
Right Instrument Panel Speaker	8W-80-132
Right Liftgate Flood Lamp	8W-80-132
Right Low Beam Lamp (Export)	8W-80-133
Right Mid Reading Lamp (Premium/ Luxury)	8W-80-133
Right Park Lamp (Export)	8W-80-133
Right Power Mirror	8W-80-133
Right Rear Lamp Assembly	8W-80-134
Right Rear Pillar Speaker (Highline Audio)	8W-80-134
Right Rear Reading Lamp (Luxury)	8W-80-134
Right Rear Speaker	8W-80-134
Right Rear Vent Motor	8W-80-135
Right Rear Wheel Speed Sensor	8W-80-135
Right Remote Radio Switch	8W-80-135
Right Repeater Lamp (Export)	8W-80-135
Right Side Impact Sensor 1 (Export)	8W-80-135
Right Side Impact Sensor 1 (Except Export)	8W-80-136
Right Side Impact Sensor 2	8W-80-136
Right Side Impact Sensor 3	8W-80-136
Right Sliding Door Control Module C1 (Power Sliding Door)	8W-80-136
Right Sliding Door Control Module C2 (Power Sliding Door)	8W-80-137
Right Sliding Door Latch Sensing Switch (Power Sliding Door)	8W-80-137
Right Sliding Door Lock Motor (Power Sliding Door)	8W-80-137
Right Sliding Door Lock Motor/Ajar Switch (Manual Sliding Door)	8W-80-138
Right Sliding Door Motor (Power Sliding Door)	8W-80-138
Right Speed Control Switch	8W-80-138
Right Turn Signal Lamp (Export)	8W-80-138
Right Visor/Vanity Lamp (Except Base/ Export)	8W-80-139
Sentry Key Remote Entry Module (SKREEM)	8W-80-139
Siren (United Kingdom)	8W-80-139
Speed Control Servo (Gas)	8W-80-139
Sunroof Module (Except Export)	8W-80-140
Sunroof Switch (Except Export)	8W-80-140
Thatcham Alarm Module (United Kingdom)	8W-80-140
Throttle Position Sensor (Gas)	8W-80-141
Traction Control Switch	8W-80-141
Trailer Tow Connector (Except Export)	8W-80-141
Transmission Control Module (Diesel)	8W-80-141
Transmission Control Relay (Diesel)	8W-80-143
Transmission Range Sensor	8W-80-143
Transmission Solenoid/Pressure Switch Assembly	8W-80-143
Vehicle Speed Sensor (MTX)	8W-80-144
Washer Fluid Level Switch	8W-80-144
Washer Pump Motor	8W-80-144
Water In Fuel Sensor (Diesel)	8W-80-144
Wiper Module	8W-80-144

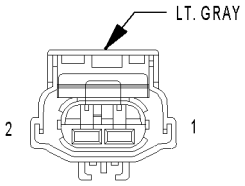

A/C COMPRESSOR CLUTCH

A/C COMPRESSOR CLUTCH - LT. GRAY 2 WAY

CAV	CIRCUIT	FUNCTION
1	C3 20DB/YL (DIESEL)	A/C COMPRESSOR CLUTCH RELAY OUTPUT
1	C3 20DB/YL (GAS)	A/C CLUTCH RELAY OUTPUT
2	Z153 18BK/GY	GROUND

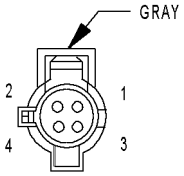

A/C PRESSURE SENSOR

A/C PRESSURE SENSOR - GRAY 4 WAY

CAV	CIRCUIT	FUNCTION
1	C918 20BK/LB (DIESEL)	A/C PRESSURE SENSOR GROUND
1	K900 18DB/DG (GAS)	SENSOR GROUND
2	F855 20PK/YL (2.4L)	5 VOLT SUPPLY
2	F855 18PK/YL (3.3L/3.8L)	5 VOLT SUPPLY
2	F851 20LB/PK (DIESEL)	SENSOR REFERENCE VOLTAGE B
3	C18 20LB/BR (DIESEL)	A/C PRESSURE SENSOR SIGNAL
3	C18 18LB/BR (GAS)	A/C PRESSURE SIGNAL
4	-	-

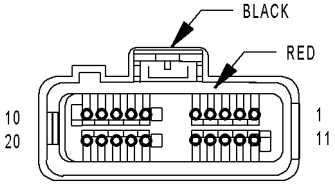

A/C-HEATER CONTROL C1 (MTC)

A/C-HEATER CONTROL C1 (MTC) - BLACK/RED 20 WAY

CAV	CIRCUIT	FUNCTION
1	Z24 18BK/OR	GROUND
2	C121 20DB/DG	SENSOR GROUND
3	C22 20LB/WT (3 ZONE)	REAR TEMPERATURE FEEDBACK SIGNAL
4	-	-
5	F850 20LB/PK (3 ZONE)	5 VOLT SUPPLY
6	-	-
7	C32 22DB/TN	RECIRCULATION DOOR DRIVER (A)
8	C54 22LB/YL (3 ZONE)	REAR BLEND DOOR DRIVER
9	C34 22DB/LB	COMMON DOOR DRIVER (B)
10	D25 20WT/VT	PCI BUS
11	-	-
12	C121 20DB/DG (3 ZONE)	REAR TEMPERATURE RETURN
13	F504 20GY/PK	IGNITION SWITCH OUTPUT (RUN)
14	E12 20OR/GY	PANEL LAMPS DRIVER
15	C21 22LB	EVAPORATOR TEMPERATURE SENSOR SIGNAL
16	C33 22LB/BR	PASSENGER BLEND DOOR DRIVER (A)
17	C61 22DB/LG (EXCEPT BASE)	DRIVER BLEND DOOR DRIVER (A)
18	C35 22LB/LG	MODE DOOR DRIVER (A)
19	C53 22LB (3 ZONE)	REAR MODE DOOR DRIVER
20	C154 20LB/OR (3 ZONE)	REAR COMMON DOOR DRIVER

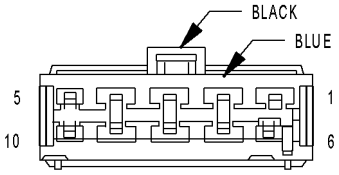

A/C-HEATER CONTROL C2 (MTC)

A/C-HEATER CONTROL C2 (MTC) - BLACK/BLUE 10 WAY

CAV	CIRCUIT	FUNCTION
1	-	-
2	C75 12DB/GY	BLOWER MOTOR HIGH DRIVER
3	C73 14DB/VT (EXCEPT EXPORT)	BLOWER MOTOR M2 DRIVER
3	C74 12DB/WT (EXPORT)	BLOWER MOTOR M3 DRIVER
4	Z134 12BK/LG	GROUND
5	C71 16DB/BR (EXPORT)	BLOWER MOTOR LOW DRIVER
6	-	-
7	-	-
8	-	-
9	C72 16DB/OR (EXCEPT EXPORT)	BLOWER MOTOR M1 DRIVER
9	C73 14DB/VT (EXPORT)	BLOWER MOTOR M2 DRIVER
10	C71 16DB/BR (EXCEPT EXPORT)	BLOWER MOTOR LOW DRIVER
10	C72 16DB/OR (EXPORT)	BLOWER MOTOR M1 DRIVER

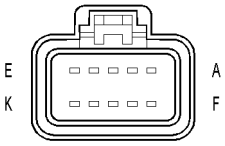

ACCELERATOR PEDAL POSITION SENSOR (DIESEL)

ACCELERATOR PEDAL POSITION SENSOR (DIESEL) - 10 WAY

CAV	CIRCUIT	FUNCTION
A	-	-
B	-	-
C	-	-
D	K4 20BK/LB	SENSOR GROUND
E	K151 20WT	LOW IDLE POSITION SWITCH SENSE
F	-	-
G	K22 20OR/DB	ACCELERATOR PEDAL POSITION SENSOR SIGNAL NO.1
H	K23 20BR/WT	ACCELERATOR PEDAL POSITION SENSOR SIGNAL NO.2
J	K900 20DB/DG	SENSOR GROUND
K	F852 20VT/PK	ACCELERATOR PEDAL POSITION SENSOR 5 VOLT SUPPLY

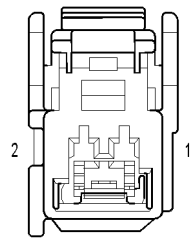

ADJUSTABLE PEDALS MOTOR (EXCEPT EXPORT)

ADJUSTABLE PEDALS MOTOR (EXCEPT EXPORT) - 2 WAY

CAV	CIRCUIT	FUNCTION
1	P205 18LG/DB	ADJUSTABLE PEDALS MOTOR FORWARD
2	P206 18LG/TN	ADJUSTABLE PEDALS MOTOR REARWARD

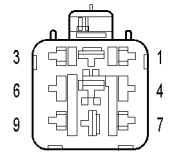

ADJUSTABLE PEDALS RELAY (EXCEPT EXPORT/EXCEPT MEMORY)

ADJUSTABLE PEDALS RELAY (EXCEPT EXPORT/EXCEPT MEMORY) - 9 WAY

CAV	CIRCUIT	FUNCTION
1	-	-
2	-	-
3	-	-
4	A108 18LG/RD	FUSED B(+)
5	A128 18RD/OR	ADJUSTABLE PEDALS RELAY OUTPUT
6	P201 20LG/DB	ADJUSTABLE PEDALS RELAY CONTROL
7	-	-
8	A108 18LG/RD	FUSED B(+)
9	-	-

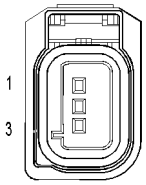

ADJUSTABLE PEDALS SENSOR (EXCEPT EXPORT)

ADJUSTABLE PEDALS SENSOR (EXCEPT EXPORT) - 3 WAY

CAV	CIRCUIT	FUNCTION
1	G11 18VT/TN (EXCEPT MEMORY)	ADJUSTABLE PEDALS SENSOR FEED
1	G11 20VT/TN (MEMORY)	ADJUSTABLE PEDALS SENSOR FEED
2	G12 18VT/BR (EXCEPT MEMORY)	ADJUSTABLE PEDALS SENSOR SIGNAL
2	G12 22VT/BR (MEMORY)	ADJUSTABLE PEDALS SENSOR SIGNAL
3	G912 18VT/WT (EXCEPT MEMORY)	ADJUSTABLE PEDALS SENSOR RETURN
3	G912 20VT/WT (MEMORY)	ADJUSTABLE PEDALS SENSOR RETURN

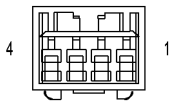

ADJUSTABLE PEDALS SWITCH (EXCEPT EXPORT)

ADJUSTABLE PEDALS SWITCH (EXCEPT EXPORT) - 4 WAY

CAV	CIRCUIT	FUNCTION
1	A128 18RD/OR (EXCEPT MEMORY)	ADJUSTABLE PEDALS RELAY OUTPUT
1	A114 18GY/RD (MEMORY)	FUSED B(+) (I.O.D.)
2	Z146 18BK/YL	GROUND
3	Q102 18OR/LB	ADJUSTABLE PEDALS SWITCH REARWARD
4	Q103 18OR/LG	ADJUSTABLE PEDALS SWITCH FORWARD

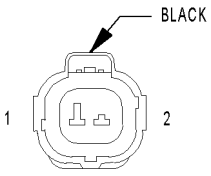

AMBIENT TEMPERATURE SENSOR

AMBIENT TEMPERATURE SENSOR - BLACK 2 WAY

CAV	CIRCUIT	FUNCTION
1	G31 18VT/LG (DIESEL)	AMBIENT TEMPERATURE SENSOR SIGNAL
1	G31 18VT/LG (GAS)	AAT SIGNAL
2	G931 18VT/BR (DIESEL)	AMBIENT TEMPERATURE SENSOR RETURN
2	K900 18DB/DG (GAS)	SENSOR GROUND

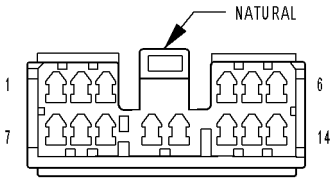

AMPLIFIER C1
(HIGHLINE AUDIO)

AMPLIFIER C1 (HIGHLINE AUDIO) - NATURAL 14 WAY

CAV	CIRCUIT	FUNCTION
1	X201 18DG (EXCEPT EXPORT)	AMPLIFIED LEFT FRONT DOOR SPEAKER (+)
1	X201 20DG (EXPORT)	AMPLIFIED LEFT FRONT DOOR SPEAKER (+)
2	X202 18GY (EXCEPT EXPORT)	AMPLIFIED RIGHT FRONT DOOR SPEAKER (+)
2	X202 20GY (EXPORT)	AMPLIFIED RIGHT FRONT DOOR SPEAKER (+)
3	X205 18GY/LG (EXCEPT EXPORT)	AMPLIFIED LEFT REAR SPEAKER (+)
3	X205 20GY/LG (EXPORT)	AMPLIFIED LEFT REAR SPEAKER (+)
4	X206 18DG/LG (EXCEPT EXPORT)	AMPLIFIED RIGHT REAR SPEAKER (+)
4	X206 20DG/LG (EXPORT)	AMPLIFIED RIGHT REAR SPEAKER (+)
5	X214 18DG/DB (EXCEPT EXPORT)	AMPLIFIED LEFT REAR TWEETER (+)
5	X214 20DG/DB (EXPORT)	AMPLIFIED LEFT REAR TWEETER (+)
6	X212 18GY/DB (EXCEPT EXPORT)	AMPLIFIED RIGHT REAR TWEETER (+)
6	X212 20GY/DB (EXPORT)	AMPLIFIED RIGHT REAR TWEETER (+)
7	X291 18DG/BR (EXCEPT EXPORT)	AMPLIFIED LEFT FRONT DOOR SPEAKER (-)
7	X291 20DG/BR (EXPORT)	AMPLIFIED LEFT FRONT DOOR SPEAKER (-)
8	X292 18GY/BR (EXCEPT EXPORT)	AMPLIFIED RIGHT FRONT DOOR SPEAKER (-)
8	X292 20GY/BR (EXPORT)	AMPLIFIED RIGHT FRONT DOOR SPEAKER (-)
9	X295 18GY/DG (EXCEPT EXPORT)	AMPLIFIED LEFT REAR SPEAKER (-)
9	X295 20GY/DG (EXPORT)	AMPLIFIED LEFT REAR SPEAKER (-)
10	-	-
11	-	-
12	X296 18DG/GY (EXCEPT EXPORT)	AMPLIFIED RIGHT REAR SPEAKER (-)
12	X296 20DG/GY (EXPORT)	AMPLIFIED RIGHT REAR SPEAKER (-)
13	X284 18DG/TN (EXCEPT EXPORT)	AMPLIFIED LEFT REAR TWEETER (-)
13	X284 20DG/TN (EXPORT)	AMPLIFIED LEFT REAR TWEETER (-)
14	X282 18GY/TN (EXCEPT EXPORT)	AMPLIFIED RIGHT REAR TWEETER (-)
14	X282 20GY/TN (EXPORT)	AMPLIFIED RIGHT REAR TWEETER (-)

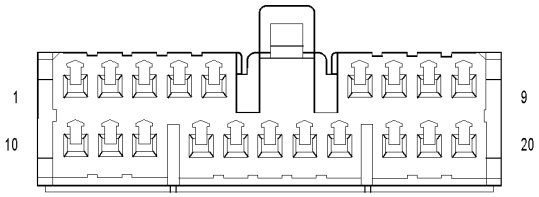

AMPLIFIER C2
(HIGHLINE AUDIO)

AMPLIFIER C2 (HIGHLINE AUDIO) - 20 WAY

CAV	CIRCUIT	FUNCTION
1	X153 18DG/YL (EXCEPT EXPORT)	LEFT INSTRUMENT PANEL SPEAKER (+)
1	X153 20DG/YL (EXPORT)	LEFT INSTRUMENT PANEL SPEAKER (+)
2	X154 18GY/YL (EXCEPT EXPORT)	RIGHT INSTRUMENT PANEL SPEAKER (+)
2	X154 20GY/YL (EXPORT)	RIGHT INSTRUMENT PANEL SPEAKER (+)
3	-	-
4	A116 16YL/RD	FUSED B (+)
5	-	-
6	D25 20WT/VT	PCI BUS
7	X51 20DG/DB	LEFT REAR SPEAKER (+)
8	X52 20GY/DB	RIGHT REAR SPEAKER (+)
9	Z513 16BK	GROUND
10	X155 18DG/LB (EXCEPT EXPORT)	LEFT INSTRUMENT PANEL SPEAKER (-)
10	X155 20DG/LB (EXPORT)	LEFT INSTRUMENT PANEL SPEAKER (-)
11	X156 18GY/LB (EXCEPT EXPORT)	RIGHT INSTRUMENT PANEL SPEAKER (-)
11	X156 20GY/LB (EXPORT)	RIGHT INSTRUMENT PANEL SPEAKER (-)
12	-	-
13	A116 16YL/RD	FUSED B (+)
14	-	-
15	-	-
16	-	-
17	F306 20DB/PK	FUSED ACCESSORY RELAY OUTPUT
18	X57 20DG/OR	LEFT REAR SPEAKER (-)
19	X58 20GY/OR	RIGHT REAR SPEAKER (-)
20	Z513 16BK	GROUND

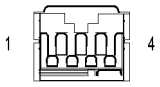

ATC REMOTE SENSOR (ATC)

ATC REMOTE SENSOR (ATC) - 4 WAY

CAV	CIRCUIT	FUNCTION
1	F600 20LB/PK	PROTECTED IGNITION
2	D40 20WT/LB	KDB NO. 2 CLOCK
3	C905 20BR/LB	SENSOR RETURN
4	D18 20WT/YL	KDB NO. 2 DATA

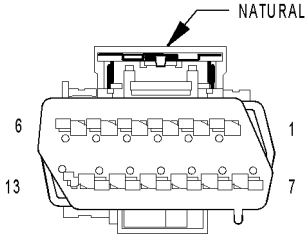

AUTO TEMP CONTROL C1

AUTO TEMP CONTROL C1 - NATURAL 13 WAY

CAV	CIRCUIT	FUNCTION
1	C161 22LB/WT	DRIVER BLEND DOOR DRIVER (B)
2	C61 22DB/LG	DRIVER BLEND DOOR DRIVER (A)
3	C133 22DB/WT	PASSENGER BLEND DOOR DRIVER (B)
4	C33 22LB/BR	PASSENGER BLEND DOOR DRIVER (A)
5	C132 22DB/YL	RECIRCULATION DOOR DRIVER (B)
6	C32 22DB/TN	RECIRCULATION DOOR DRIVER (A)
7	C135 22DB/GY	MODE DOOR DRIVER (B)
8	C35 22LB/LG	MODE DOOR DRIVER (A)
9	C53 22LB	REAR MODE DOOR DRIVER (A)
10	C154 22LB/OR	REAR MODE DOOR DRIVER (B)
11	C54 22LB/YL	REAR BLEND DOOR DRIVER (A)
12	C169 22DB/OR	REAR BLEND DOOR DRIVER (B)
13	-	-

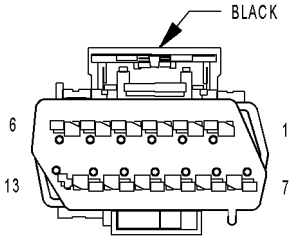

AUTO TEMP CONTROL C2

AUTO TEMP CONTROL C2 - BLACK 13 WAY

CAV	CIRCUIT	FUNCTION
1	C21 22LB	EVAPORATOR TEMPERATURE SENSOR SIGNAL
2	C121 20DB/DG (LHD)	SENSOR GROUND
2	C121 22DB/DG (RHD)	SENSOR GROUND
3	E12 20OR/GY	PANEL LAMPS DRIVER
4	A114 18GY/RD	FUSED B(+) (I.O.D.)
5	F504 20GY/PK	FUSED IGNITION SWITCH OUTPUT (RUN)
6	D25 20WT/VT	PCI BUS
7	C56 22DB/VT (LHD)	BLOWER MOTOR CONTROL
7	C56 22DB/LB (RHD)	BLOWER MOTOR CONTROL
8	C59 22DB/LB	REAR BLOWER MOTOR CONTROL
9	D22 20WT/TN (3 ZONE)	KDB CLOCK
10	D17 22WT/DG	KDB DATA
11	Z24 18BK/OR	GROUND
12	-	-
13	-	-

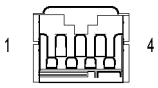

AUTO TEMP CONTROL C3

AUTO TEMP CONTROL C3 - 4 WAY

CAV	CIRCUIT	FUNCTION
1	F600 20LB/PK	PROTECTED IGNITION
2	D40 20WT/LB	KDB NO. 2 CLOCK
3	C905 20BR/LB	SENSOR RETURN
4	D18 20WT/YL	KDB NO. 2 DATA

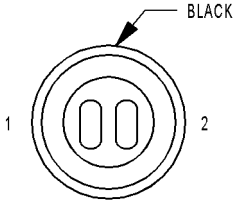

BACK-UP LAMP SWITCH (MTX)

BACK-UP LAMP SWITCH (MTX) - BLACK 2 WAY

CAV	CIRCUIT	FUNCTION
1	T2 18DG/WT	TRS REVERSE SENSE
2	Z252 18BK/WT	GROUND

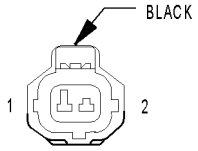

BATTERY TEMPERATURE SENSOR

BATTERY TEMPERATURE SENSOR - BLACK 2 WAY

CAV	CIRCUIT	FUNCTION
1	K25 20BR/TN (DIESEL)	BATTERY TEMPERATURE SENSOR SIGNAL
1	K91 18DB/YL (GAS)	BATTERY TEMP SIGNAL
2	K900 20DB/DG (DIESEL)	SENSOR GROUND
2	K900 18DB/DG (GAS)	SENSOR GROUND

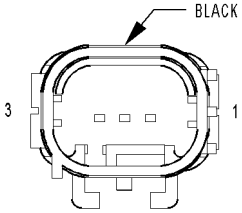

BELT TENSION SENSOR (OCCUPANT SENSING)

BELT TENSION SENSOR (OCCUPANT SENSING) - BLACK 3 WAY

CAV	CIRCUIT	FUNCTION
1	R86 20LG/LB	BELT TENSION SENSOR FEED
2	R986 20LG/BR	BELT TENSION SENSOR GROUND
3	D105 20WT/OR	BELT TENSION SENSOR SIGNAL

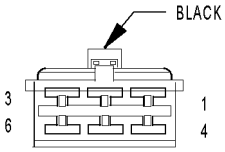

BLOWER MOTOR RESISTOR C1 (MTC)

BLOWER MOTOR RESISTOR C1 (MTC) - BLACK 6 WAY

CAV	CIRCUIT	FUNCTION
1	C75 12DB/GY (EXPORT)	BLOWER MOTOR HIGH DRIVER
2	C75 12DB/GY (EXCEPT EXPORT)	BLOWER MOTOR HIGH DRIVER
2	C74 12DB/WT (EXPORT)	BLOWER MOTOR M3 DRIVER
3	C73 14DB/VT	BLOWER MOTOR M2 DRIVER
4	C7 12DB	FUSED FRONT BLOWER MOTOR RELAY OUTPUT
5	C72 16DB/OR	BLOWER MOTOR M1 DRIVER
6	C71 16DB/BR	BLOWER MOTOR LOW DRIVER

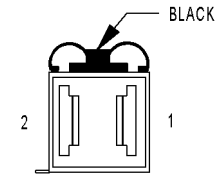

BLOWER MOTOR RESISTOR C2 (MTC)

BLOWER MOTOR RESISTOR C2 (MTC) - BLACK 2 WAY

CAV	CIRCUIT	FUNCTION
1	C70 12DG	REAR BLOWER HIGH SPEED
2	C7 12BK	HIGH SPEED BLOWER MOTOR

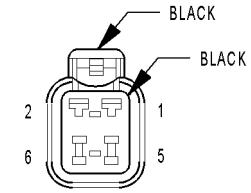

BODY CONTROL MODULE C1

BODY CONTROL MODULE C1 - BLACK/BLACK 6 WAY

CAV	CIRCUIT	FUNCTION
1	A101 12VT/RD	FUSED B(+)
2	A701 16BR/RD	FUSED B(+) (HAZARD)
3	Z100 12BK/TN	GROUND
4	-	-
5	A101 12VT/RD	FUSED B(+)
6	-	-

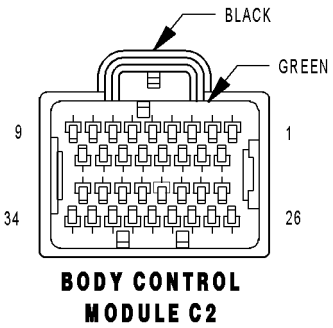

BODY CONTROL MODULE C2

BODY CONTROL MODULE C2 - BLACK/GREEN 34 WAY

CAV	CIRCUIT	FUNCTION
1	L61 20WT/LB	LEFT FRONT TURN SIGNAL DRIVER
2	L63 18WT/DG	LEFT REAR TURN SIGNAL DRIVER
3	L60 18WT/TN	RIGHT FRONT TURN SIGNAL DRIVER
4	L62 18WT/BR	RIGHT REAR TURN SIGNAL DRIVER
5	F20 20PK/WT	FUSED IGNITION SWITCH OUTPUT (RUN-START)
6	G25 22VT/TN	LIFTGATE SWITCH MUX
7	A114 18GY/RD	FUSED B(+) (I.O.D.)
8	-	-
9	L1 18WT/LG	BACK-UP LAMP FEED
10	P3 20TN/WT	LEFT FRONT DOOR LOCK DRIVER
11	P2 20TN/GY	RIGHT FRONT DOOR LOCK DRIVER
12	P38 20TN/DB	RIGHT SLIDING DOOR LOCK DRIVER
13	-	-
14	-	-
15	Z15 18BK/TN	GROUND
16	G920 20VT/YL (MEMORY)	MEMORY SELECT SWITCH RETURN
17	G153 20VT/DG (POWER LIFTGATE)	LIFTGATE MODULE WAKE UP SIGNAL
18	P32 20TN/VT	LEFT SLIDING DOOR LOCK DRIVER
19	Z10 18BK/TN	GROUND
20	P5 20TN/OR	LEFT SLIDING DOOR UNLOCK DRIVER
21	P164 18LG/DB (EXPORT)	PASSENGER FOLDING MIRROR RELAY INPUT
22	P30 20TN/DG	LIFTGATE HANDLE SWITCH SENSE
23	-	-
24	G200 20VT/BR (MEMORY)	MEMORY SELECT SWITCH MUX
25	M22 20YL/OR	COURTESY LAMPS DRIVER
26	P4 20TN/BR	RIGHT FRONT DOOR UNLOCK DRIVER
27	P34 20TN/LB	RIGHT SLIDING DOOR UNLOCK DRIVER
28	P1 20TN/LG	LEFT FRONT DOOR UNLOCK DRIVER
29	P159 20TN/DG (EXPORT)	DRIVER FOLDING MIRROR FOLD DRIVER
30	P174 20TN/LB (EXPORT)	RIGHT FOLDING MIRROR UNFOLD DRIVER
31	P171 20TN/YL (EXPORT)	LEFT FOLDING MIRROR UNFOLD DRIVER
32	W13 18BR/LG	REAR WIPER MOTOR CONTROL
33	-	-
34	L38 20WT/YL (EXPORT)	REAR FOG LAMP SWITCH OUTPUT

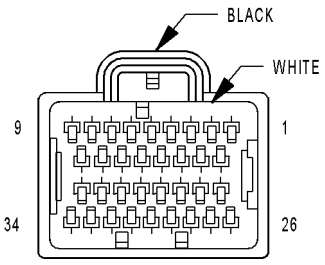

BODY CONTROL MODULE C3

BODY CONTROL MODULE C3 - BLACK/WHITE 34 WAY

CAV	CIRCUIT	FUNCTION
1	G23 22VT/DB (POWER SLIDING DOOR)	SLIDING DOORS OVERHEAD SWITCH MUX
2	D123 20WT/BR	FLASH PROGRAM ENABLE
3	G152 22VT/GY (POWER SLIDING DOOR)	RIGHT SLIDING DOOR WAKE UP SIGNAL
4	G151 22VT/BR (POWER SLIDING DOOR)	LEFT SLIDING DOOR WAKE UP SIGNAL
5	G76 20VT/YL	RIGHT SLIDING DOOR AJAR SWITCH SENSE
6	G75 20VT (LHD)	LEFT FRONT DOOR AJAR SWITCH SENSE
6	G74 20VT/WT (RHD)	RIGHT FRONT DOOR AJAR SWITCH SENSE
7	G74 20VT/WT (LHD)	RIGHT FRONT DOOR AJAR SWITCH SENSE
7	G75 20VT (RHD)	LEFT FRONT DOOR AJAR SWITCH SENSE
8	G77 22VT/GY	LEFT SLIDING DOOR AJAR SWITCH SENSE
9	E10 20OR/DG (3 ZONE HVAC)	PANEL LAMPS DRIVER
10	-	-
11	L162 20WT/VT (EXPORT)	RIGHT SIDE REPEATER LAMP FEED
12	G42 22VT/YL (POWER SLIDING DOOR)	RIGHT SLIDING DOOR PILLAR SWITCH MUX
13	-	-
14	G163 20VT/LB (EXPORT)	LEFT CYLINDER LOCK SWITCH MUX
15	G162 20VT/TN (EXPORT)	RIGHT CYLINDER LOCK SWITCH MUX
16	L50 18WT/TN (EXCEPT EXPORT)	BRAKE LAMP SWITCH OUTPUT
17	F503 20WT/PK (EXCEPT BASE)	FUSED IGNITION SWITCH OUTPUT (RUN)
18	G41 22VT/DG (POWER SLIDING DOOR)	LEFT SLIDING DOOR PILLAR SWITCH MUX
19	L163 20WT/BR (EXPORT)	LEFT SIDE REPEATER LAMP FEED
20	N4 20DB/WT	FUEL LEVEL SENSOR SIGNAL
21	G161 20VT/DG (LHD)	LEFT DOOR LOCK SWITCH MUX
21	G160 20VT/LG (RHD)	RIGHT DOOR LOCK SWITCH MUX
22	G160 20VT/LG (LHD)	RIGHT DOOR LOCK SWITCH MUX
22	G161 20VT/DG (RHD)	LEFT DOOR LOCK SWITCH MUX
23	D25 20WT/VT	PCI BUS
24	-	-
25	M11 20YL/VT	COURTESY LAMPS DRIVER
26	P31 20TN/YL (POWER RELEASE)	LIFTGATE RELEASE DRIVER
27	-	-
28	-	-
29	G78 20VT/OR	LIFTGATE AJAR SWITCH SENSE
30	G70 22VT/LB (EXPORT)	HOOD AJAR SWITCH SENSE
31	F500 18DG/PK (ABS)	FUSED IGNITION SWITCH OUTPUT (RUN)
32	-	-
33	M21 20YL/BR	COURTESY LAMPS DRIVER
34	M27 20YL/LB	READING LAMPS DRIVER

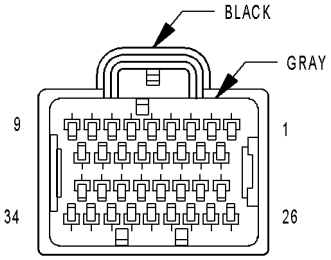

BODY CONTROL MODULE C4

BODY CONTROL MODULE C4 - BLACK/GRAY 34 WAY

CAV	CIRCUIT	FUNCTION
1	-	-
2	E12 20OR/GY	PANEL LAMPS DRIVER
3	E19 20OR/BR (AUTOMATIC HEAD-LAMPS)	HEADLAMP SWITCH DIMMER SIGNAL
4	-	-
5	G150 22VT/BR	INSTRUMENT CLUSTER WAKE UP SENSE
6	-	-
7	P162 20LG/DG (EXPORT)	PASSENGER FOLDING MIRROR RELAY CONTROL
8	-	-
9	L161 20WT/LG	LEFT TURN INDICATOR DRIVER
10	F504 20GY/PK	FUSED IGNITION SWITCH OUTPUT (RUN)
11	E14 20OR/TN	PANEL LAMPS DRIVER
12	E13 20OR/WT	PANEL LAMPS DRIVER
13	X920 22GY/OR (REMOTE AUDIO)	RADIO CONTROL MUX RETURN
14	G900 20VT/DB	IGNITION SWITCH SENSE RETURN
15	-	-
16	-	-
17	L160 20WT/TN	RIGHT TURN INDICATOR DRIVER
18	-	-
19	-	-
20	-	-
21	-	-
22	G902 22VT/LB	MULTI-FUNCTION SWITCH MUX RETURN
23	-	-
24	-	-
25	-	-
26	-	-
27	-	-
28	-	-
29	-	-
30	-	-
31	-	-
32	B27 20DG/WT (TRACTION CONTROL)	TRACTION CONTROL SWITCH SENSE
33	P136 20TN/YL (EXPORT)	FOLDING MIRROR SWITCH SENSE
34	G26 22VT/OR	CHIME DRIVER

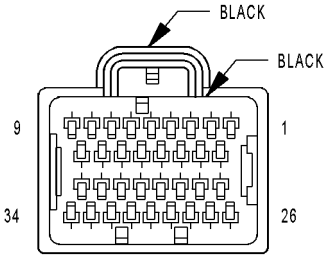

BODY CONTROL MODULE C5

BODY CONTROL MODULE C5 - BLACK/BLACK 34 WAY

CAV	CIRCUIT	FUNCTION
1	L91 22WT/DB (LHD)	HAZARD SWITCH SENSE
1	L91 20WT/DB (RHD)	HAZARD SWITCH SENSE
2	-	-
3	-	-
4	-	-
5	-	-
6	-	-
7	-	-
8	-	-
9	-	-
10	G20 20VT/BR	IGNITION SWITCH SENSE
11	-	-
12	-	-
13	-	-
14	-	-
15	-	-
16	G926 22VT/WT (ATC/EXPORT MTC)	REAR WIPER SWITCH MUX RETURN
17	L900 22WT/YL	HEADLAMP SWITCH MUX RETURN
18	L307 20WT/BR	HEADLAMP SWITCH MUX
19	-	-
20	-	-
21	-	-
22	-	-
23	-	-
24	-	-
25	L36 20WT/DB (EXPORT)	REAR FOG LAMP INDICATOR DRIVER
26	X20 22GY/WT (REMOTE AUDIO)	RADIO CONTROL MUX
27	G194 22VT/LG	HIGH BEAM/FRONT WASHER SWITCH MUX
28	W26 22BR/DB (PREMIUM/LUXURY/ EXPORT)	REAR WIPER SWITCH MUX
29	W52 22BR/YL	FRONT WIPER SWITCH MUX
30	E2 22OR/BR	PANEL LAMPS DIMMER SIGNAL
31	L305 20WT/LB	TURN SIGNAL SWITCH MUX
32	-	-
33	-	-
34	L39 22WT/OR (HIGHLINE)	FRONT FOG LAMP INDICATOR DRIVER

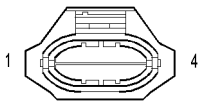

BOOST PRESSURE SENSOR (DIESEL)

BOOST PRESSURE SENSOR (DIESEL) - 4 WAY

CAV	CIRCUIT	FUNCTION
1	K121 20DB	BOOST PRESSURE SENSOR GROUND
2	K21 20DB/LG	INTAKE AIR TEMPERATURE SENSOR SIGNAL
3	F851 20LB/PK	SENSOR REFERENCE VOLTAGE B
4	K37 20DB/YL	BOOST PRESSURE SENSOR SIGNAL



BRAKE FLUID LEVEL SWITCH

BRAKE FLUID LEVEL SWITCH - 2 WAY

CAV	CIRCUIT	FUNCTION
1	B20 20DG/OR	BRAKE FLUID LEVEL SWITCH SENSE
2	Z420 20BK/OR	GROUND

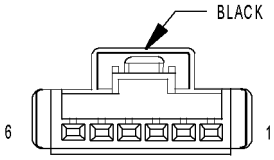

BRAKE LAMP SWITCH

BRAKE LAMP SWITCH - BLACK 6 WAY

CAV	CIRCUIT	FUNCTION
1	A103 18GY/RD	FUSED B(+)
2	L50 18WT/TN (DIESEL)	PRIMARY BRAKE SWITCH SIGNAL
2	L50 18WT/TN (GAS)	BRAKE LAMP SWITCH OUTPUT
3	V30 20VT/WT (GAS)	S/C BRAKE SWITCH OUTPUT
4	V32 20VT/YL (GAS)	SPEED CONTROL SUPPLY
5	Z429 20BK/OR	GROUND
6	B29 20DG/WT	SECONDARY BRAKE SWITCH SIGNAL

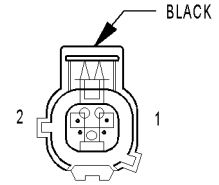

BRAKE TRANSMISSION SHIFT INTERLOCK SOLENOID

BRAKE TRANSMISSION SHIFT INTERLOCK SOLENOID - BLACK 2 WAY

CAV	CIRCUIT	FUNCTION
1	K32 18DB/YL	BRAKE TRANSMISSION SHIFT INTERLOCK SOLENOID CONTROL
2	F2 18PK/YL	FCM OUTPUT (UNLOCK-RUN-START)

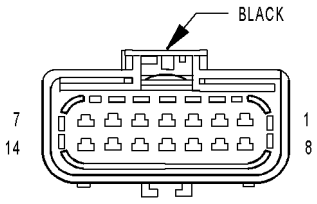

C100

C100 - BLACK (BODY SIDE)

CAV	CIRCUIT
1	D21 20WT/DG
2	D123 20WT/BR
3	D15 20DG/YL (DIESEL)
3	D20 20WT/LG (GAS)
4	R80 20VT/LB (DIESEL)
4	T141 20YL/OR (GAS MTX EXPORT)
5	Z111 20BK/WT
6	N1 16DB/OR (DIESEL)
6	G31 18VT/LG (GAS/EXCEPT SIDE AIRBAG)
6	G31 18WT/LG (GAS/SIDE AIRBAG)
7	N2 18DB/YL (DIESEL)
7	D15 20DG/YL (GAS)
8	K22 20OR/DB (DIESEL)
8	V32 20VT/YL (GAS)
9	B29 20DG/WT
10	V37 20VT
11	R82 20WT/LB (DIESEL)
11	V30 20VT/WT (GAS)
12	K900 20DB/DG
13	B1 18DG/OR (ABS)
14	B2 18DG/LB (ABS)

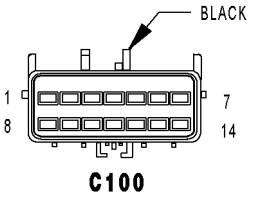

C100

C100 - BLACK (POWERTRAIN SIDE)

CAV	CIRCUIT
1	D21 20WT/DG (2.4L/DIESEL)
1	D21 20WT/BR (3.3L/3.8L)
2	D123 20WT/BR (2.4L EATX)
2	D123 20WT/OR (3.3L/3.8L)
3	D15 20DG/YL (DIESEL EATX)
3	D20 20WT/LG (GAS)
4	R80 18VT/LB (DIESEL)
4	T141 18YL (GAS MTX EXPORT)
5	Z111 20BK/WT
6	N1 18DB/OR (DIESEL)
6	G31 18VT/LG (GAS)
7	N2 18DB/YL (DIESEL)
7	D15 18DG/YL (GAS EATX)
8	K22 20OR/DB (DIESEL)
8	V32 18VT/YL (GAS)
9	B29 20DG/WT (DIESEL)
9	B29 18DG/WT (GAS)
10	V37 20VT/TN (DIESEL)
10	V37 18VT (GAS)
11	R82 18WT/LB (DIESEL)
11	V30 20VT/WT (GAS)
12	K900 20DB/DG
13	B1 18DG/OR (ABS)
14	B2 18DG/LB (ABS)

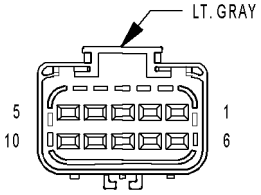

C101
(DIESEL)

C101 (DIESEL) - LT. GRAY (BODY SIDE)

CAV	CIRCUIT
1	L50 18WT/TN
2	K23 20BR/WT (EATX)
3	F853 20LG/PK
4	K119 20DB/LG (MTX)
5	B4 18DG/GY (ANTILOCK BRAKES)
6	B3 18DG/YL (ANTILOCK BRAKES)
7	F500 18DG/PK
8	K4 20BK/LB
9	F852 20VT/PK
10	K151 20WT

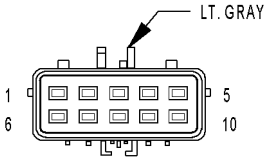

C101 (DIESEL)

C101 (DIESEL) - LT. GRAY (POWERTRAIN SIDE)

CAV	CIRCUIT
1	L50 20WT/TN
2	K23 20BR/OR (EATX)
3	F853 20LG/PK
4	K119 20DB/LG (MTX)
5	B4 18DG/GY (ANTILOCK BRAKES)
6	B3 18DG/YL (ANTILOCK BRAKES)
7	F500 18DG/PK
8	K4 20BK/LB
9	F852 20VT/PK
10	K151 20WT

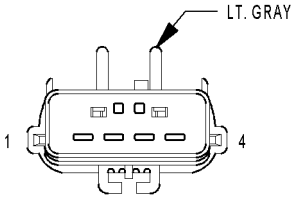

C101 (GAS)

C101 (GAS) - LT. GRAY (BODY SIDE)

CAV	CIRCUIT
1	L50 18WT/TN
2	B4 18DG/GY
3	B3 18DG/YL
4	F500 18DG/PK

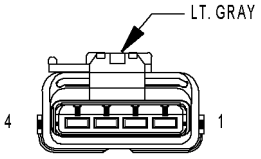

C101 (GAS)

C101 (GAS) - LT. GRAY (POWERTRAIN SIDE)

CAV	CIRCUIT
1	L50 18WT/TN
2	B4 18DG/GY
3	B3 18DG/YL
4	F500 18DG/PK

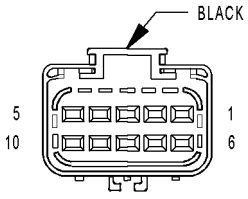

C102 (GAS)

C102 (GAS) - BLACK (FUEL RAIL SIDE)

CAV	CIRCUIT
1	K11 16BR/YL (2.4L)
1	K342 16BR/WT (3.3L/3.8L)
2	K12 16BR/DB (2.4L)
2	K1 18VT/BR (3.3L/3.8L)
3	K13 16BR/LB (2.4L)
3	K11 16BR/YL (3.3L/3.8L)
4	K14 16BR/TN (2.4L)
4	K12 16BR/DB (3.3L/3.8L)
5	K342 16BR/WT (2.4L)
5	K13 16BR/LB (3.3L/3.8L)
6	K900 18DB/DG (2.4L)
6	K14 16BR/TN (3.3L/3.8L)
7	K2 18VT/OR (2.4L)
7	K900 18DB/DG (3.3L/3.8L)
8	K1 18VT/BR (2.4L)
8	K38 16BR/OR (3.3L/3.8L)
9	K58 16BR/VT (3.3L/3.8L)
10	F855 18PK/YL

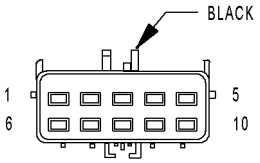

C102
(GAS)

C102 (GAS) - BLACK (POWERTRAIN SIDE)

CAV	CIRCUIT
1	K11 16BR/YL (2.4L)
1	K342 16BR/WT (3.3L/3.8L)
2	K12 16BR/DB (2.4L)
2	K1 18VT/BR (3.3L/3.8L)
3	K13 16BR/LB (2.4L)
3	K11 16BR/YL (3.3L/3.8L)
4	K14 16BR/TN (2.4L)
4	K12 16BR/DB (3.3L/3.8L)
5	K342 16BR/WT (2.4L)
5	K13 16BR/LB (3.3L/3.8L)
6	K900 18DB/DG (2.4L)
6	K14 16BR/TN (3.3L/3.8L)
7	K2 18VT/OR (2.4L)
7	K900 18DB/DG (3.3L/3.8L)
8	K1 18VT/BR (2.4L)
8	K38 16BR/OR (3.3L/3.8L)
9	K58 16BR/VT (3.3L/3.8L)
10	F855 20PK/YL

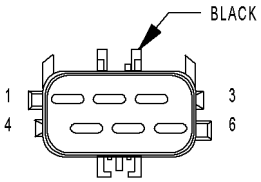

C103
(DIESEL)

C103 (DIESEL) - BLACK (FRONT END LIGHTING SIDE)

CAV	CIRCUIT
1	K342 16BR/WT
2	R80 18VT/LB
3	N122 20DB/YL
4	N210 18DB/DG
5	A201 12RD/LG
6	R82 18WT/LB

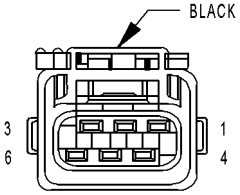

C103
(DIESEL)

C103 (DIESEL) - BLACK (POWERTRAIN SIDE)

CAV	CIRCUIT
1	K342 16BR/WT
2	R80 18VT/LB
3	N122 20DB/YL
4	N210 20DB/DG
5	A201 12RD/LG
6	R82 18WT/LB

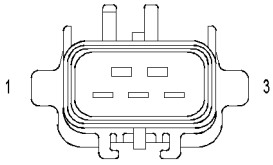

C104
(EXCEPT EXPORT)

C104 (EXCEPT EXPORT) - (ENGINE SIDE)

CAV	CIRCUIT
1	Z166 18BK/WT
2	K107 20VT/WT
3	K106 20VT/LB

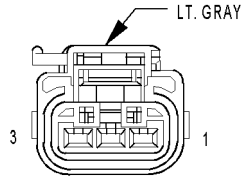

C104
(EXCEPT EXPORT)

C104 (EXCEPT EXPORT) - LT. GRAY (JUMPER SIDE)

CAV	CIRCUIT
1	Z166 18BK/WT
2	K107 18VT/WT
3	K106 18VT/GY

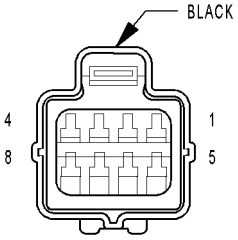

C106
(EXPORT)

C106 (EXPORT) - BLACK (FRONT END LIGHTING SIDE)

CAV	CIRCUIT
1	L43 18WT/DB
2	L33 18WT/LG
3	L77 18WT/BR
4	L61 18WT/LB
5	Z343 18BK/LG
6	L13 20WT/YL
7	Z203 20BK/YL
8	Z377 18BK/BR

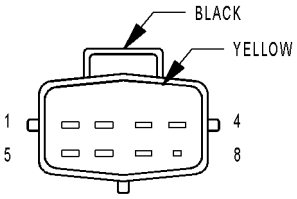

C106
(EXPORT)

C106 (EXPORT) - BLACK/YELLOW (COMPONENT SIDE)

CAV	CIRCUIT
1	L43 16WT
2	L33 16GY
3	L77 16BK
4	L61 16YL
5	Z343 16BR
6	L13 16RD
7	Z203 16BR
8	Z377 18BK/BR

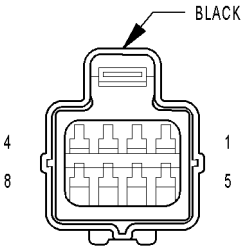

C107
(EXPORT)

C107 (EXPORT) - BLACK (FRONT END LIGHTING SIDE)

CAV	CIRCUIT
1	L44 16WT/TN
2	L34 16WT/GY
3	L78 18WT/OR
4	L60 18WT/TN
5	Z344 16BK/TN
6	L13 20WT/YL
7	Z203 20BK/YL
8	Z378 18BK/TN

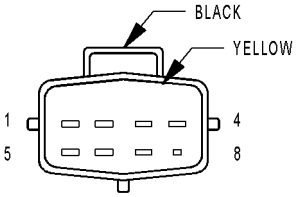

C107 (EXPORT)

C107 (EXPORT) - BLACK/YELLOW (COMPONENT SIDE)

CAV	CIRCUIT
1	L44 16WT
2	L34 16GY
3	L78 16BK
4	L60 16YL
5	Z344 16BR
6	L13 16RD
7	Z203 16BR
8	Z378 18BK/TN

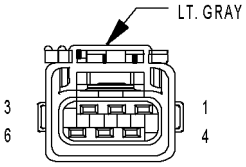

C111 (EATX)

C111 (EATX) - LT. GRAY (ENGINE SIDE)

CAV	CIRCUIT
1	Z133 16BK/LG
2	T15 18YL/BR
3	-
4	Z133 16BK/LG
5	T16 18YL/OR
6	-

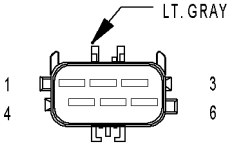

C111 (EATX)

C111 (EATX) - LT. GRAY (TRANSMISSION SIDE)

CAV	CIRCUIT
1	Z133 16BK/LG
2	T15 18YL/BR
3	-
4	Z133 16BK/LG
5	T16 18YL/OR
6	-

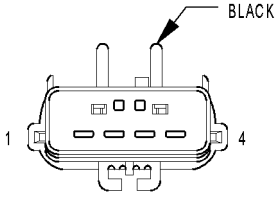

C112 (GAS)

C112 (GAS) - BLACK (BODY SIDE)

CAV	CIRCUIT
1	R80 20VT/LB
2	R82 20WT/LB
3	G31 18VT/LG (EXCEPT OCCUPANT SENSING)
3	G31 18WT/LG (OCCUPANT SENSING)
4	K900 20DB/DG

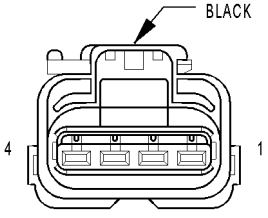

C112 (GAS)

C112 (GAS) - BLACK (FRONT END LIGHTING SIDE)

CAV	CIRCUIT
1	R80 18VT/LB
2	R82 18WT/LB
3	G31 18VT/LG
4	K900 18DB/DG

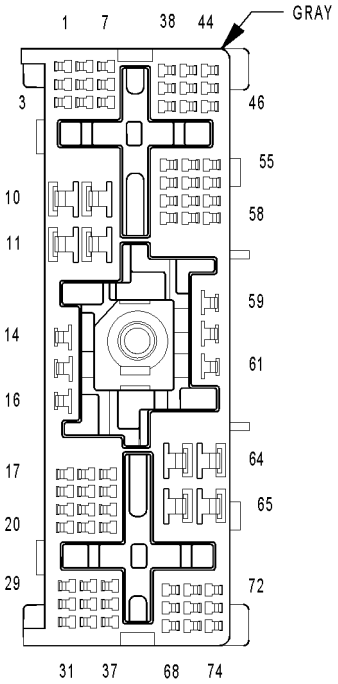

C200

C200 - GRAY (BODY SIDE)

CAV	CIRCUIT
1	C151 18LB/DG (3 ZONE MTC EXCEPT EXPORT)
1	B25 20DG/WT (EXPORT)
2	A106 20LB/RD
3	A108 18LG/RD (POWER MIRROR EXCEPT EXPORT)
3	A108 20LG/RD (POWER MIRROR EXPORT)
4	C59 20DB/LB (3 ZONE ATC)
4	C152 16LB/LG (3 ZONE MTC)
5	P159 20TN/DG (EXPORT)
6	K32 18DB/YL
7	C53 20LB (3 ZONE HVAC)
8	C16 20DB/GY
9	D17 20WT/DG (3 ZONE ATC)
9	C22 20LB/WT (3 ZONE MTC)
10	C50 12DB/OR (3 ZONE MTC)
10	L13 20WT/YL (EXPORT)
11	C7 12DB
12	C153 12DB/BR (3 ZONE MTC)
12	D123 20WT/BR (RHD)
13	Z849 12BK/OR (MEMORY DIESEL)
13	Z408 18BK/LG (MEMORY EXCEPT EXPORT)
14	A105 18DB/RD
15	A114 16GY/RD
16	F306 20DB/PK (HIGHLINE AUDIO/EXCEPT EXPORT)
16	F306 16DB/PK (LOWLINE AUDIO/EXPORT)
17	C169 20DB/OR (3 ZONE ATC)
17	C154 20LB/OR (3 ZONE MTC)
18	D22 20WT/TN (3 ZONE ATC)
18	C121 20DB/DG (3 ZONE MTC)
19	P160 18TN/LG (EXPORT)
20	-
21	F2 18PK/YL
22	Q102 18OR/LB (EXCEPT EXPORT)
22	L78 18WT/OR (EXPORT)
23	Q103 18OR/LG (EXCEPT EXPORT)
23	P174 20TN/LB (EXPORT)
24	D25 20WT/VT
25	P64 22TN (LHD MEMORY)
25	R79 20LB/VT (RHD)
26	P65 22TN/VT (LHD MEMORY)
26	R81 20LB/WT (RHD)
27	P66 22TN/LG (RHD MEMORY)
28	P67 22TN/OR (RHD MEMORY)
29	F20 20PK/WT
30	F100 18PK/VT
31	F201 20PK/OR (ORC)
32	F504 20GY/PK (3 ZONE ATC)
32	F850 20LB/PK (3 ZONE MTC)
33	P68 22TN/YL (RHD MEMORY)
34	P69 22TN/DB (LHD MEMORY)
35	R21 20LB/WT (SIDE AIRBAG)
36	R23 20LB/YL (SIDE AIRBAG)
37	R22 20WT/LB (SIDE AIRBAG)
38	R24 20YL/LB (SIDE AIRBAG)
39	R79 20LB/VT (LHD)

C200 - GRAY (BODY SIDE)

CAV	CIRCUIT
39	D96 18WT/LB (RHD)
40	R80 20VT/LB (LHD)
40	Z109 18BK/GY (RHD)
41	R81 20LB/WT (LHD)
41	A645 20RD/VT (RHD)
42	R82 20WT/LB (LHD)
42	G945 20VT/DG (RHD)
43	A128 18RD/OR (EXCEPT MEMORY/EXCEPT EXPORT)
44	P70 20TN/LB (RHD MEMORY)
45	P71 20TN/DG (LHD MEMORY)
46	P72 20TN/GY (RHD MEMORY)
47	P73 20TN/YL (LHD MEMORY)
48	P74 20TN/DB (RHD MEMORY)
49	P75 20TN/LG (LHD MEMORY)
49	R80 20VT/LB (RHD)
50	P112 22TN/OR (LUXURY EXCEPT HANDS FREE/EXCEPT EXPORT)
50	R82 20WT/LB (RHD)
51	P171 20TN/YL (EXPORT)
51	P114 22TN/WT (LUXURY EXCEPT HANDS FREE/EXCEPT EXPORT)
52	P7 22LG/DG (HEATED SEATS)
53	P8 22LG/WT (HEATED SEATS)
54	C154 20LB/OR (3 ZONE HVAC)
55	X156 20GY/LB (EXPORT)
55	X156 18GY/LB (HIGHLINE AUDIO EXCEPT EXPORT)
56	X154 20GY/YL (EXPORT)
56	X154 18GY/YL (HIGHLINE AUDIO EXCEPT EXPORT)
57	P162 18LG/DG (EXPORT)
58	T751 20YL
59	-
60	A701 18BR/RD
61	X3 20DG/VT
62	X153 20DG/YL (EXPORT LOWLINE AUDIO)
62	X53 20DG (LOWLINE AUDIO)
63	X154 20GY/YL (EXPORT LOWLINE AUDIO)
63	X54 20GY (LOWLINE AUDIO)
64	X155 20DG/LB (EXPORT LOWLINE AUDIO)
64	X55 20DG/BR (LOWLINE AUDIO)
65	X156 20GY/LB (EXPORT LOWLINE AUDIO)
65	X56 20GY/BR (LOWLINE AUDIO)
66	C54 20LB/YL (3 ZONE HVAC)
67	V37 20VT
68	X51 20DG/DB
69	X52 20GY/DB
70	X57 20DG/OR
71	X58 20GY/OR
72	X153 20DG/YL (EXPORT)
72	X153 18DG/YL (HIGHLINE AUDIO EXCEPT EXPORT)
73	K900 20DB/DG
74	X155 20DG/LB (EXPORT)
74	X155 18DG/LB (HIGHLINE AUDIO EXCEPT EXPORT)

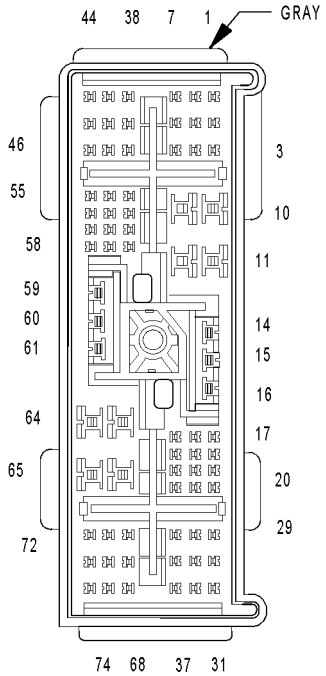

C200

C200 - GRAY (INSTRUMENT PANEL SIDE)

CAV	CIRCUIT
1	C151 18LB/DG (3 ZONE MTC EXCEPT EXPORT)
1	B25 20DG/WT (EXPORT)
2	A106 20LB/RD
3	A108 20LG/RD (POWER MIRROR)
4	C59 22DB/LB (3 ZONE ATC)
4	C152 16LB/LG (3 ZONE MTC)
5	P159 20TN/DG (EXPORT)
6	K32 18DB/YL
7	C53 22LB (3 ZONE HVAC)
8	C16 20DB/GY (HEATED MIRROR)
9	D17 22WT/DG (3 ZONE ATC)
9	C22 20LB/WT (3 ZONE MTC)
10	C50 12DB/OR (3 ZONE MTC)
10	L13 20WT/YL (EXPORT)
11	C7 12DB
12	C153 12DB/BR (3 ZONE MTC)
12	D23 20WT/BR (RHD)
13	Z408 18BK/LG (MEMORY EXCEPT EXPORT)
13	Z849 12BK/OR (MEMORY EXPORT)
14	A105 16DB/RD (EXCEPT LOWLINE)
15	A114 16GY/RD
16	F306 18DB/PK
17	C169 22DB/OR (3 ZONE ATC)
17	C154 20LB/OR (3 ZONE MTC)
18	D22 20WT/TN (3 ZONE ATC)
18	C121 20DB/DG (3 ZONE MTC)
19	P160 20TN/LG (EXPORT)
20	-
21	F2 18PK/YL
22	Q102 18OR/LB (EXCEPT EXPORT)
22	L78 20WT/OR (EXPORT)
23	Q103 18OR/LG (EXCEPT EXPORT)
23	P174 20TN/LB (EXPORT)
24	D25 20WT/VT
25	P64 20TN (LHD MEMORY)
25	R79 20LB/WT (RHD)
26	P65 20TN/VT (LHD MEMORY)
26	R81 20LB/WT (RHD)
27	P66 20TN/LG (RHD MEMORY)
28	P67 20TN/OR (RHD MEMORY)
29	F20 20PK/WT
30	F100 18PK/VT
31	F201 20PK/OR (ORC)
32	F504 20GY/PK (3 ZONE ATC)
32	F850 20LB/PK (3 ZONE MTC)
33	P68 20TN/YL (RHD MEMORY)
34	P69 20TN/WT (LHD MEMORY)
35	R21 20LB/WT (SAB)
36	R23 20LB/YL (SAB)
37	R22 20WT/LB (SAB)
38	R24 20YL/LB (SAB)
39	R79 20LB/VT (LHD)
39	D96 20WT/LB (RHD)
40	R80 20VT/LB (LHD)

C200 - GRAY (INSTRUMENT PANEL SIDE)

CAV	CIRCUIT
40	Z109 20BK/GY (RHD)
41	R81 20LB/WT (LHD)
41	A645 20RD/VT (RHD)
42	R82 20WT/LB (LHD)
42	G945 20VT/DG (RHD)
43	A128 18RD/OR (EXCEPT EXPORT/EXCEPT MEMORY)
44	P70 20/LB (RHD MEMORY)
45	P71 20TN/DG (LHD MEMORY)
46	P72 20TN/LG (RHD MEMORY)
47	P73 20TN/YL (LHD MEMORY)
48	P74 20TN/DB (RHD MEMORY)
49	P75 20TN/LG (LHD MEMORY)
49	R80 20VT/LB (RHD)
50	P112 22TN/OR (LUXURY/EXCEPT EXPORT)
50	R82 20WT/LB (RHD)
51	P171 20TN/YL (EXPORT)
51	P114 22TN/WT (LUXURY/EXCEPT EXPORT)
52	P7 20LG/DG (HEATED SEATS)
53	P8 20LG/WT (HEATED SEATS)
54	C154 22LB/OR (3 ZONE ATC)
54	C154 20LB/OR (3 ZONE MTC)
55	X156 20GY/LB (EXPORT)
55	X156 18GY/LB (HIGHLINE AUDIO EXCEPT EXPORT)
56	X154 20GY/YL (EXPORT)
56	X154 18GY/YL (HIGHLINE AUDIO EXCEPT EXPORT)
57	P162 20LG/DG (EXPORT)
58	T751 20YL
59	X15 16GY/DG (EXPORT)
60	A701 18BR/RD
61	X3 22DG/VT
62	X153 20DG/YL (LOWLINE AUDIO)
62	X53 20DG (LOWLINE AUDIO/EXPORT)
63	X154 20GY/YL (LOWLINE AUDIO)
63	X54 20GY (LOWLINE AUDIO/EXPORT)
64	X155 20DG/LB (LOWLINE AUDIO)
64	X55 20DG/BR (LOWLINE AUDIO/EXPORT)
65	X156 20GY/BR (LOWLINE AUDIO)
65	X56 20GY/BR (LOWLINE AUDIO/EXPORT)
66	C54 22LB/YL (3 ZONE HVAC)
67	V37 22VT
68	X51 22DG/DB
69	X52 22GY/DB
70	X57 22DG/OR
71	X58 22GY/OR
72	X153 20DG/YL (EXPORT)
72	X153 18DG/YL (HIGHLINE AUDIO EXCEPT EXPORT)
73	K900 20DB/DG
74	X155 20DG/LB (EXPORT)
74	X155 22DG/LB (HIGHLINE AUDIO EXCEPT EXPORT)

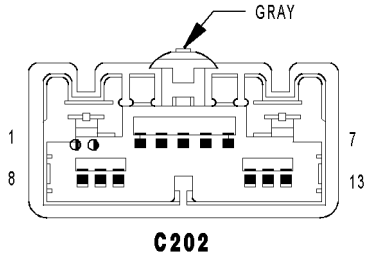

C202

C202 - GRAY (COMPONENT SIDE)

CAV	CIRCUIT
1	Z134 12BK/OR (ATC)
2	C56 20DB/LB (ATC)
2	C34 20DB/LB (MTC)
3	C32 20DB/TN
4	C33 20LB/BR
5	C61 20DB/LG (ATC)
5	C61 20LB/WT (MTC)
6	C35 20LB/OR
7	C7 12DB (ATC)
8	C132 20DB/YL (ATC)
9	C133 20DB/WT (ATC)
10	C161 20LB/WT (ATC)
11	C135 20DB/GY (ATC)
12	C21 20DB/LG
13	C121 20DB/DG

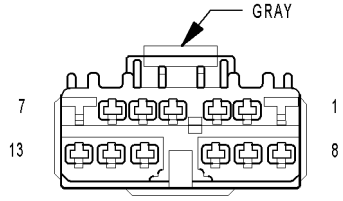

C202

C202 - GRAY (INSTRUMENT PANEL SIDE)

CAV	CIRCUIT
1	Z134 12BK/LG
2	C56 22DB/VT (ATC LHD)
2	C56 22DB/LB (ATC RHD)
2	C34 22DB/LB (MTC)
3	C32 22DB/TN
4	C33 22LB/BR
5	C61 22DB/LG
6	C35 22LB/LG
7	C7 12DB (ATC)
8	C132 22DB/YL (ATC)
9	C133 22DB/WT (ATC)
10	C161 22LB/WT (ATC)
11	C135 22DB/GY (ATC)
12	C21 22LB
13	C121 20DB/DG

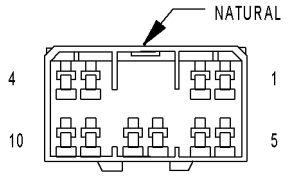

C204
(PREMIUM)

C204 (PREMIUM) - NATURAL (DVD SCREEN JUMPER SIDE)

CAV	CIRCUIT
1	X515 22GY/OR
2	X915 22GY/LB
3	-
4	-
5	X211 20YL/GY
6	X114 20GY/LB
7	X955 20BK/GY
8	-
9	X555 20VT/OR
10	X530 20GY/DB

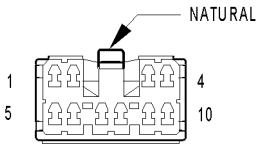

C204
(PREMIUM)

C204 (PREMIUM) - NATURAL (DVD/CD CHANGER SIDE)

CAV	CIRCUIT
1	X515 22GY/OR
2	X915 22GY/LB
3	-
4	-
5	X211 20YL/GY
6	X114 20GY/LB
7	X955 20BK/GY
8	-
9	X555 20VT/OR
10	X530 20GY/DB

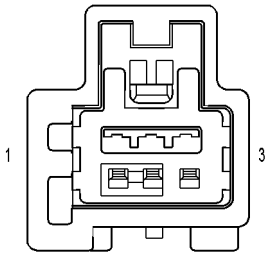

C206
(EXCEPT BASE)

C206 (EXCEPT BASE) - (INSTRUMENT PANEL JUMPER SIDE)

CAV	CIRCUIT
1	A114 20GY/RD
2	Z530 20GY/BK
3	-

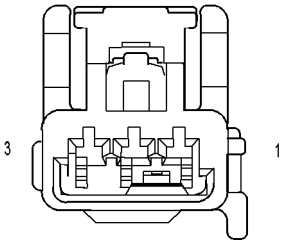

C206
(EXCEPT BASE)

C206 (EXCEPT BASE) - (INSTRUMENT PANEL SIDE)

CAV	CIRCUIT
1	A114 20GY/RD
2	Z530 20GY/BK
3	-

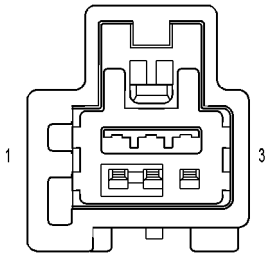

C207
(DVD)

C207 (DVD) - (INSTRUMENT PANEL JUMPER SIDE)

CAV	CIRCUIT
1	A114 20GY/RD
1	A114 20GY/RD
2	-
3	Z530 20GY/BK
3	Z530 20GY/BK

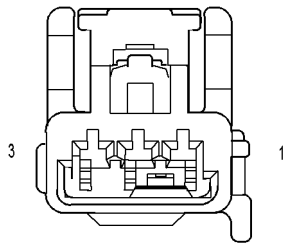

C207
(HANDS FREE)

C207 (HANDS FREE) - (HANDS FREE MODULE SIDE)

CAV	CIRCUIT
1	A114 20GY/RD
2	-
3	Z530 20GY/BK

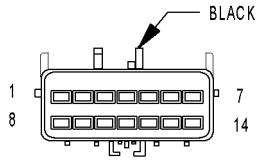

C300
(LHD)

C300 (LHD) - BLACK (BODY SIDE)

CAV	CIRCUIT
1	G75 20VT
2	Z821 12BK/BR
3	X201 18DG (HIGHLINE AUDIO EXCEPT EXPORT)
3	X201 20DG (HIGHLINE AUDIO EXPORT)
3	X53 20DG (LOWLINE AUDIO)
4	X291 18DG/BR (HIGHLINE AUDIO EXCEPT EXPORT)
4	X291 20DG/BR (HIGHLINE AUDIO EXPORT)
4	X55 20DG/BR (LOWLINE AUDIO)
5	G161 20VT/DG
6	P1 20TN/LG
7	P3 20TN/WT
8	F302 18GY/PK (EXCEPT POWER WINDOWS)
8	F304 12WT/PK (POWER WINDOWS)
9	Q16 12OR/TN (POWER WINDOWS)
10	Q26 14OR/GY (POWER WINDOWS)
11	Q13 16OR/DB (POWER WINDOWS)
12	Q23 16OR/LB (POWER WINDOWS)
13	Q14 16OR/BR
14	Q24 16OR/DG (POWER WINDOWS)

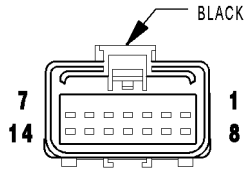

C300
(LHD)

C300 (LHD) - BLACK (LEFT DOOR SIDE)

CAV	CIRCUIT
1	G75 20VT
2	Z75 20BK/VT (BASE)
2	Z821 12BK/BR (EXCEPT BASE)
3	X53 20DG
4	X55 20DG/BR
5	G161 20VT/DG (POWER LOCKS)
6	P1 20TN/LG (POWER LOCKS)
7	P3 20TN/WT (POWER LOCKS)
8	F304 12WT/PK (POWER WINDOWS)
9	Q16 12OR/TN (POWER WINDOWS)
10	Q26 14OR/GY (POWER WINDOWS EXCEPT MEMORY)
10	Q26 12OR/GY (POWER WINDOWS MEMORY)
11	Q13 16OR/DB (POWER WINDOWS)
12	Q23 16OR/LB (POWER WINDOWS)
13	Q14 16OR/BR (POWER WINDOWS)
14	Q24 16OR/DG (POWER WINDOWS)

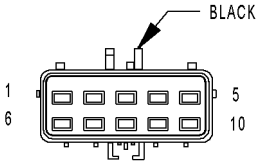

C300
(RHD)

C300 (RHD) - BLACK (BODY SIDE)

CAV	CIRCUIT
1	G75 20VT
2	Z822 20BK/BR
3	X53 20DG
4	X55 20DG/BR
5	G161 20VT/DG
6	P1 20TN/LG
7	P3 20TN/WT
8	F304 12WT/PK
9	Q16 12OR/TN (POWER WINDOWS)
10	Q26 14OR/GY (POWER WINDOWS)

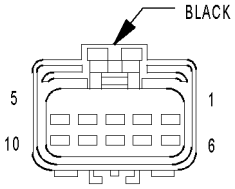

C300
(RHD)

C300 (RHD) - BLACK (LEFT DOOR SIDE)

CAV	CIRCUIT
1	G75 20VT
2	Z822 20BK/BR
3	X53 20DG
4	X55 20DG/BR
5	G161 20VT/DG
6	P1 20TN/LG
7	P3 20TN/WT
8	F304 12WT/PK
9	Q16 12OR/TN (POWER WINDOWS)
10	Q26 14OR/GY (POWER WINDOWS)

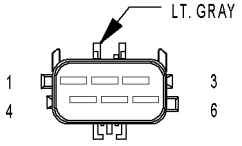

C301
(LUXURY/EXPORT)

C301 (LUXURY/EXPORT) - LT. GRAY (BODY SIDE)

CAV	CIRCUIT
1	M21 20YL/BR
2	-
3	G200 20VT/BR (MEMORY)
4	G920 20VT/YL (MEMORY)
5	-
6	G163 20VT/LB (EXPORT)

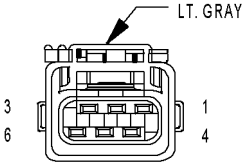

C301
(LUXURY/EXPORT)

C301 (LUXURY/EXPORT) - LT. GRAY (LEFT DOOR SIDE)

CAV	CIRCUIT
1	M21 20YL/BR
2	-
3	G200 20VT/BR (MEMORY EXCEPT EXPORT)
3	G200 22VT/BR (MEMORY EXPORT)
4	G920 20VT/YL (MEMORY EXCEPT EXPORT)
4	G920 22VT/YL (MEMORY EXPORT)
5	-
6	G163 20VT/LB (EXPORT)

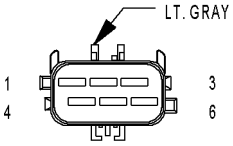

C302 (EXPORT)

C302 (EXPORT) - LT. GRAY (BODY SIDE)

CAV	CIRCUIT
1	M21 20YL/BR
2	-
3	G200 22VT/BR (MEMORY)
4	G920 22VT/YL (MEMORY)
5	-
6	G162 20VT/WT

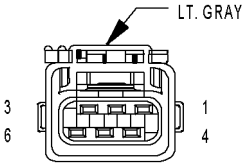

C302 (EXPORT)

C302 (EXPORT) - LT. GRAY (RIGHT DOOR SIDE)

CAV	CIRCUIT
1	M21 20YL/BR
2	-
3	G200 20VT/BR
4	G920 20VT/YL
5	-
6	G162 20VT/WT

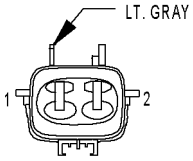

C302 (LUXURY/EXCEPT EXPORT)

C302 (LUXURY/EXCEPT EXPORT) - LT. GRAY (BODY SIDE)

CAV	CIRCUIT
1	M21 16YL/BR
2	-

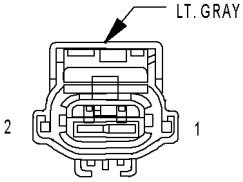

C302 (LUXURY/EXCEPT EXPORT)

C302 (LUXURY/EXCEPT EXPORT) - LT. GRAY (RIGHT DOOR SIDE)

CAV	CIRCUIT
1	M21 14YL/BR
2	-

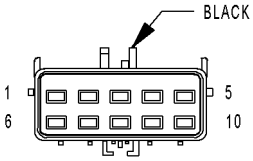

C303
(LHD)

C303 (LHD) - BLACK (BODY SIDE)

CAV	CIRCUIT
1	G74 20VT/WT
2	Z822 20BK/BR
3	X202 20GY (HIGHLINE AUDIO EXPORT)
3	X202 18GY (HIGHLINE AUDIO EXCEPT EXPORT)
3	X54 20GY (LOWLINE AUDIO)
4	X292 18GY/BR (HIGHLINE AUDIO EXCEPT EXPORT)
4	X292 20GY/BR (HIGHLINE AUDIO EXPORT)
4	X56 20GY/BR (LOWLINE AUDIO)
5	G160 20VT/LG
6	P2 20TN/GY
7	P4 20TN/BR
8	F304 18GY/PK (EXCEPT POWER WINDOWS)
8	F304 12WT/PK (POWER WINDOWS)
9	Q16 12OR/TN (POWER WINDOWS)
10	Q26 14OR/GY (POWER WINDOWS)

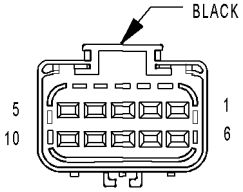

C303
(LHD)

C303 (LHD) - BLACK (RIGHT DOOR SIDE)

CAV	CIRCUIT
1	G74 20VT/WT
2	Z74 20BK/WT (BASE)
2	Z822 20BK/BR (EXCEPT BASE)
3	X54 20GY
4	X56 20GY/BR
5	G160 20VT/LG (POWER LOCKS)
6	P2 20TN/GY (POWER LOCKS)
7	P4 20TN/BR (POWER LOCKS)
8	F304 16WT/PK (EXCEPT POWER WINDOWS)
8	F304 12WT/PK (POWER WINDOWS)
9	Q16 12OR/TN (POWER WINDOWS)
10	Q26 14OR/GY (POWER WINDOWS EXCEPT MEMORY)
10	Q26 12OR/GY (POWER WINDOWS MEMORY)

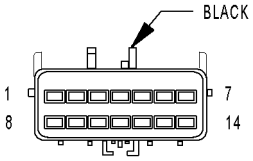

C303
(RHD)

C303 (RHD) - BLACK (BODY SIDE)

CAV	CIRCUIT
1	G74 20VT/WT
2	Z821 12BK/BR
3	X202 20GY
4	X292 20GY/BR
5	G160 20VT/LG
6	P2 20TN/GY
7	P4 20TN/BR
8	F304 12WT/PK
9	Q16 12OR/TN (POWER WINDOWS)
10	Q26 14OR/GY (POWER WINDOWS)
11	Q13 16OR/DB (POWER WINDOWS)
12	Q23 16OR/LB (POWER WINDOWS)
13	Q14 16OR/BR (POWER WINDOWS)
14	Q24 16OR/DG (POWER WINDOWS)

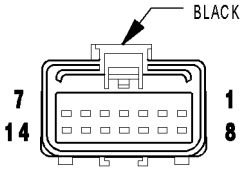

C303
(RHD)

C303 (RHD) - BLACK (RIGHT DOOR SIDE)

CAV	CIRCUIT
1	G74 20VT/WT
2	Z821 12BK/BR
3	X54 20GY
4	X56 20GY/BR
5	G160 20VT/LG
6	P2 20TN/GY
7	P4 20TN/BR
8	F304 12WT/PK
9	Q16 12OR/TN (POWER WINDOWS)
10	Q26 14OR/GY (POWER WINDOWS EXCEPT MEMORY)
10	Q26 12OR/GY (POWER WINDOWS MEMORY)
11	Q13 16OR/DB (POWER WINDOWS)
12	Q23 16OR/LB (POWER WINDOWS)
13	Q14 16OR/BR (POWER WINDOWS)
14	Q24 16OR/DG (POWER WINDOWS)

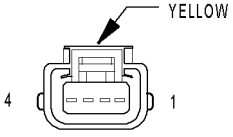

C304
(LHD)

C304 (LHD) - YELLOW (BODY SIDE)

CAV	CIRCUIT
1	R53 20LG/YL
2	R55 20LG/DG
3	-
4	-

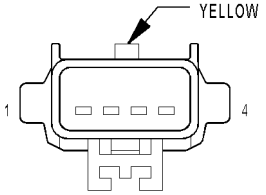

C304
(LHD)

C304 (LHD) - YELLOW (SEAT SIDE)

CAV	CIRCUIT
1	R53 18LG/YL
2	R55 18LG/DG
3	-
4	-

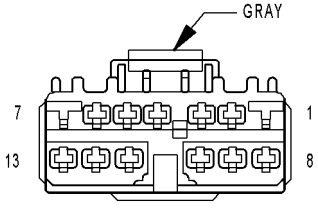

C305

C305 - GRAY (BODY SIDE)

CAV	CIRCUIT
1	Z849 12BK/OR (POWER SEAT)
2	R57 20LG/GY
3	R59 20LG/TN
4	P7 22LG/DG (HEATED SEATS)
5	A210 14OR/RD (HEATED SEATS)
6	F503 20WT/PK (HEATED SEATS)
7	A110 12OR/RD (POWER SEAT)
8	-
9	-
10	-
11	-
12	-
13	-

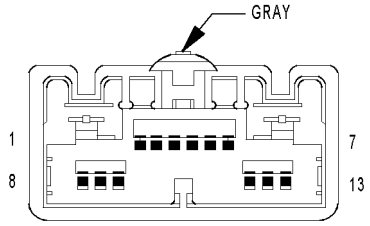

C305

C305 - GRAY (SEAT SIDE)

CAV	CIRCUIT
1	Z849 12BK/OR (POWER SEAT)
2	R57 18LG/GY
3	R59 18LG/TN
4	P7 20LG/DG (HEATED SEAT)
5	A210 14OR/RD (HEATED SEAT)
6	F503 20WT/PK (HEATED SEAT)
7	A110 12OR/RD (POWER SEAT)
8	-
9	-
10	-
11	-
12	-
13	-

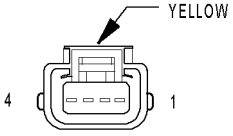

C306
(RHD)

C306 (RHD) - YELLOW (BODY SIDE)

CAV	CIRCUIT
1	R53 20LG/YL
2	R55 20LG/DG
3	-
4	-

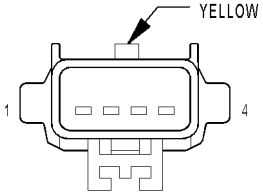

C306
(RHD)

C306 (RHD) - YELLOW (SEAT SIDE)

CAV	CIRCUIT
1	R53 18LG/YL
2	R55 18LG/DG
3	-
4	-

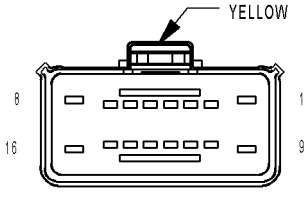

C307

C307 - YELLOW (BODY SIDE)

CAV	CIRCUIT
1	Z848 12BK/OR POWER SEAT)
2	P8 22LG/WT (HEATED SEAT)
3	F201 20PK/OR (EXCEPT EXPORT)
4	R54 20LB/YL
5	R56 20LB/DG
6	R986 20LG/BR (EXCEPT EXPORT)
7	D105 20WT/OR (EXCEPT EXPORT)
8	A210 16OR/RD (POWER SEAT/EXCEPT EXPORT)
8	A210 14OR/RD (POWER SEAT/EXPORT)
9	-
10	D25 20WT/VT (EXCEPT EXPORT)
11	Z104 18BK/LG (EXCEPT EXPORT)
12	-
13	-
14	R86 20LG/LB (EXCEPT EXPORT)
15	F503 20WT/PK (HEATED SEAT)
16	-

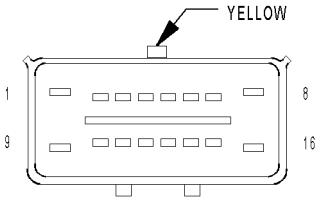

C307

C307 - YELLOW (SEAT SIDE)

CAV	CIRCUIT
1	Z848 14BK/OR (POWER SEAT)
2	P8 20LG/DG (HEATED SEAT)
3	F201 20PK/OR (OCCUPANT SENSING/EXCEPT EXPORT)
4	R54 18LB/YL
5	R56 18LB/DG
6	R986 20LG/BR (OCCUPANT SENSING/EXCEPT EXPORT)
7	D105 20LG/LB (OCCUPANT SENSING/EXCEPT EXPORT)
8	A210 14OR/RD
9	R60 16LB/TN
10	D25 20WT/VT (OCCUPANT SENSING/EXCEPT EXPORT)
11	Z104 20BK/LG (OCCUPANT SENSING/EXCEPT EXPORT)
12	-
13	-
14	R86 20LG/LB (OCCUPANT SENSING/EXCEPT EXPORT)
15	F503 20WT/PK (HEATED SEAT)
16	R58 16LB/GY

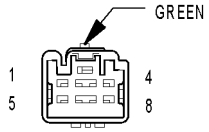

C308 (EXCEPT SIDE AIRBAG)

C308 (EXCEPT SIDE AIRBAG) - GREEN (BODY SIDE)

CAV	CIRCUIT
1	Z77 22BK/GY (MANUAL SLIDING DOOR)
1	Z825 14BK/WT (POWER SLIDING DOOR)
2	P32 20TN/VT
3	G77 22VT/GY
4	P5 20TN/OR
5	G151 22VT/BR (POWER SLIDING DOOR)
6	D25 20WT/VT (MEMORY)
6	D25 20WT/VT (POWER SLIDING DOOR)
7	-
8	A113 12WT/RD (POWER SLIDING DOOR)

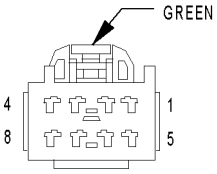

C308 (EXCEPT SIDE AIRBAG)

C308 (EXCEPT SIDE AIRBAG) - GREEN (LEFT DOOR WIRE TRACK ASSEMBLY SIDE)

CAV	CIRCUIT
1	Z76 20BK (MANUAL SLIDING DOOR)
1	Z824 14BK (POWER SLIDING DOOR)
2	P34 20BK/DB
3	G77 20BK/DG
4	P38 20BK/DB
5	G151 20BK/GY (POWER SLIDING DOOR)
6	D25 20BK/VT (MEMORY)
6	D25 20BK/VT (POWER SLIDING DOOR)
7	-
8	A113 14BK/RD (POWER SLIDING DOOR)

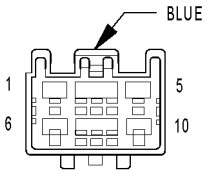

C308
(SIDE AIRBAG)

C308 (SIDE AIRBAG) - BLUE (BODY SIDE)

CAV	CIRCUIT
1	Z77 22BK/GY (MANUAL SLIDING DOOR)
1	Z825 14BK/ WT (POWER SLIDING DOOR)
2	P32 20TN/VT
3	G77 22VT/GY
4	P5 20TN/OR
5	R17 20LG
6	A113 12WT/RD (POWER SLIDING DOOR)
7	G151 22VT/BR (POWER SLIDING DOOR)
8	D25 20WT/VT (MEMORY)
8	D25 20WT/VT (POWER SLIDING DOOR)
9	-
10	R19 20LG/WT

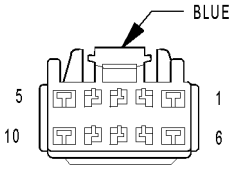

C308
(SIDE AIRBAG)

C308 (SIDE AIRBAG) - BLUE (LEFT DOOR WIRE TRACK ASSEMBLY SIDE)

CAV	CIRCUIT
1	Z76 20BK (MANUAL SLIDING DOOR)
1	Z824 14BK (POWER SLIDING DOOR)
2	P34 20BK/TN
3	G77 20BK/DG
4	P38 20BK/DB
5	R17 18LG
6	A113 14BK/RD (POWER SLIDING DOOR)
7	G151 20BK/GY (POWER SLIDING DOOR)
8	D25 20BK/VT (MEMORY)
8	D25 20BK/VT (POWER SLIDING DOOR)
9	-
10	R19 18LG/WT

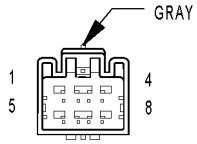

C309
(EXCEPT
SIDE AIRBAG)

C309 (EXCEPT SIDE AIRBAG) - GRAY (BODY SIDE)

CAV	CIRCUIT
1	Z76 22BK/YL (MANUAL SLIDING DOOR)
1	Z824 14BK/WT (POWER SLIDING DOOR)
2	P34 20TN/LB
3	G76 20VT/YL
4	P38 20TN/DB
5	G152 22VT/GY (POWER SLIDING DOOR)
6	D25 20WT/VT (HIGHLINE AUDIO POWER SLIDING DOOR)
6	D25 20WT/VT (POWER SLIDING DOOR)
7	-
8	A113 12WT/RD (POWER SLIDING DOOR)

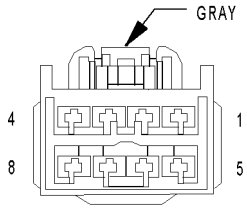

C309 (EXCEPT SIDE AIRBAG)

C309 (EXCEPT SIDE AIRBAG) - GRAY (RIGHT DOOR WIRE TRACK ASSEMBLY SIDE)

CAV	CIRCUIT
1	Z76 20BK (MANUAL SLIDING DOOR)
1	Z824 14BK (POWER SLIDING DOOR)
2	P34 20BK/TN
3	G76 20BK/DG
4	P38 20BK/DB
5	G152 20BK/GY (POWER SLIDING DOOR)
6	D25 20BK/VT (POWER SLIDING DOOR)
7	-
8	A113 14BK/RD (POWER SLIDING DOOR)

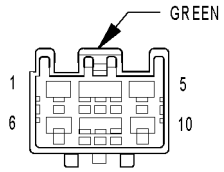

C309 (SIDE AIRBAG)

C309 (SIDE AIRBAG) - GREEN (BODY SIDE)

CAV	CIRCUIT
1	Z76 22BK/YL (MANUAL SLIDING DOOR)
1	Z824 14BK/WT (POWER SLIDING DOOR)
2	P34 20TN/LB
3	G76 20VT/YL
4	P38 20TN/DB
5	R18 20LB
6	A113 12WT/RD (POWER SLIDING DOOR)
7	G152 22VT/GY (POWER SLIDING DOOR)
8	D25 20WT/VT (HIGHLINE AUDIO POWER SLIDING DOOR)
8	D25 20WT/VT (POWER SLIDING DOOR)
10	R20 20WT/LG

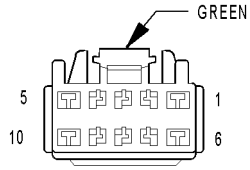

C309 (SIDE AIRBAG)

C309 (SIDE AIRBAG) - GREEN (RIGHT DOOR WIRE TRACK ASSEMBLY SIDE)

CAV	CIRCUIT
1	Z76 20BK (MANUAL SLIDING DOOR)
1	Z824 14BK (POWER SLIDING DOOR)
2	P34 20BK/TN
3	G76 20BK/DG
4	P38 20BK/DB
5	R18 18LB
6	A113 14BK/RD (POWER SLIDING DOOR)
7	G152 20BK/GY (POWER SLIDING DOOR)
8	D25 20BK/VT (POWER SLIDING DOOR)
9	-
10	R20 18WT/LG

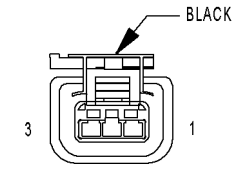

C310
(FRONT CONSOLE)

C310 (FRONT CONSOLE) - BLACK (BODY SIDE)

CAV	CIRCUIT
1	Z746 18BK/DB
2	M27 20YL/LB
3	A105 18DB/RD

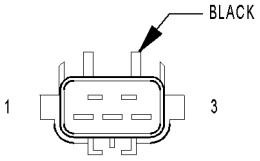

C310
(FRONT CONSOLE)

C310 (FRONT CONSOLE) - BLACK (FRONT CONSOLE SIDE)

CAV	CIRCUIT
1	Z746 16BK
1	Z746 16BK
2	M27 18OR
3	A105 16RD

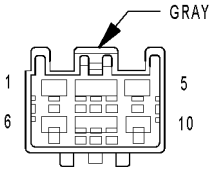

C311
(3 ZONE
HVAC/EXCEPT
SIDE AIRBAG)

C311 (3 ZONE HVAC/EXCEPT SIDE AIRBAG) - GRAY (BODY SIDE)

CAV	CIRCUIT
1	C153 12DB/BR (MTC)
2	F504 20GY/PK (ATC)
2	F850 20LB/PK (MTC)
3	D22 20WT/TN (ATC)
3	C121 20DB/DG (MTC)
4	D17 20WT/DG (ATC)
4	C22 20LB/WT (MTC)
5	C151 18LB/DG (MTC)
6	-
7	C152 16LB/LG (MTC)
8	E10 20OR/DG
9	Z27 18BK/DG (ATC)
9	Z409 20BK/OR (MTC)
10	C50 12DB/OR (MTC)

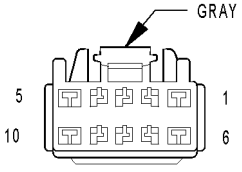

C311
(3 ZONE
HVAC/EXCEPT
SIDE AIRBAG)

C311 (3 ZONE HVAC/EXCEPT SIDE AIRBAG) - GRAY (REAR A/C JUMPER SIDE)

CAV	CIRCUIT
1	C153 12 DB/BR (MTC)
2	F504 20GY/PK (ATC)
2	F850 20LB/PK (MTC)
3	D22 22WT/TN (ATC)
3	C121 20DB/DG (MTC)
4	D17 22WT/DG (ATC)
4	C22 20LB/DB (MTC)
5	C151 18LB/DG (MTC)
6	-
7	C152 16LB/LG (MTC)
8	E10 20OR/DG
9	Z27 18BK/DG (ATC)
9	Z409 20BK/OR (MTC)
10	C50 12DB/OR (MTC)

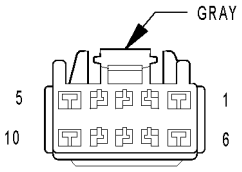

C311 (3 ZONE HVAC/SIDE AIRBAG)

C311 (3 ZONE HVAC/SIDE AIRBAG) - GRAY (BODY SIDE)

CAV	CIRCUIT
1	C153 12DB/BR (MTC)
2	F504 20GY/PK (ATC)
2	F850 20LB/PK (MTC)
3	D22 20WT/TN (ATC)
3	C121 20DB/DG (MTC)
4	D17 20WT/DG (ATC)
4	C22 20LB/WT (MTC)
5	C151 18LB/DG (MTC)
6	-
7	C152 16LB/LG (MTC)
8	E10 20OR/DG
9	Z27 18BK/DG (ATC)
9	Z409 20BK/OR (MTC)
10	C50 12DB/OR (MTC)

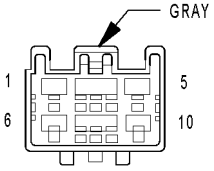

C311 (3 ZONE HVAC/SIDE AIRBAG)

C311 (3 ZONE HVAC/SIDE AIRBAG) - GRAY (REAR A/C JUMPER SIDE)

CAV	CIRCUIT
1	C153 12DB/BR (MTC)
2	F504 20GY/PK (ATC)
2	F850 20LB/PK (MTC)
3	D22 22WT/TN (ATC)
3	C121 20DB/DG (MTC)
4	D17 22WT/DG (ATC)
4	C22 20LB/DB (MTC)
5	C151 18LB/DG (MTC)
6	-
7	C152 16LB/LG (MTC)
8	E10 20OR/DG
9	Z27 18BK/DG (ATC)
9	Z409 20BK/OR (MTC)
10	C50 12DB/OR (MTC)

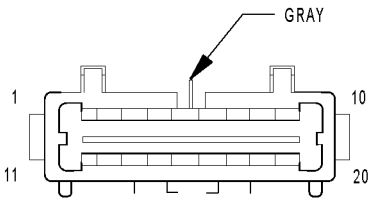

C312
(EXCEPT SIDE AIRBAG)

C312 (EXCEPT SIDE AIRBAG) - GRAY (BODY SIDE)

CAV	CIRCUIT
1	M27 20YL/LB
1	M27 20YL/LB (FRONT CONSOLE)
2	M22 20YL/OR
3	G23 22VT/DB (POWER SLIDING DOOR)
4	G25 22VT/TN (HIGHLINE)
5	D25 20WT/VT (DRIVER SIDE POWER SLIDING DOOR/EXCEPT EXPORT)
5	D25 20WT/VT (HIGHLINE)
6	A114 18GY/RD (HIGHLINE)
7	F503 20WT/PK (HIGHLINE)
8	X777 20DG/GY (REAR PARK ASSIST)
9	P112 22TN/OR (LUXURY)
10	P114 22TN/WT (LUXURY)
11	M21 20YL/BR
12	Z837 20BK/WT
12	Z113 20BK/WT (HIGHLINE)
13	Z13 20BK/WT
14	Z113 20BK/WT (HIGHLINE)
15	Q3 20OR/TN (SUNROOF)
16	Q4 20OR/YL (SUNROOF)
17	Q5 20OR/LB (SUNROOF)
18	Z171 20BK/GY (REAR PARK ASSIST)
19	D777 20WT/GY (REAR PARK ASSIST)
20	-

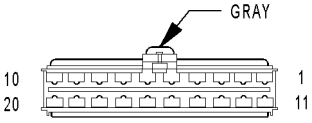

C312
(EXCEPT SIDE AIRBAG)

C312 (EXCEPT SIDE AIRBAG) - GRAY (HEADLINER SIDE)

CAV	CIRCUIT
1	M27 20YL/LB
1	M27 20YL/LB (EXCEPT BASE)
2	M22 20YL/OR
3	G23 22VT/DB
3	G23 20VT/DB (EXCEPT BASE)
4	G25 22VT/TN
4	G25 20VT/TN (EXCEPT BASE)
5	D25 20WT/VT (EXCEPT BASE)
6	A114 20GY/RD (EXCEPT BASE)
7	F503 20BK/PK
7	F503 20WT/PK (EXCEPT BASE)
8	X777 20DG/GY (REAR PARK ASSIST)
9	P112 22BK/OR (LUXURY)
10	P114 22BK/LB (LUXURY)
11	M21 20YL/BR
12	Z837 20BK/OR
12	Z327 20BK/OR
12	Z137 20BK/LB (EXCEPT BASE)
13	Z13 20BK/WT (EXCEPT BASE)
14	Z113 20BK/DB (EXCEPT BASE)
14	Z113 20BK/WT (EXPORT)
14	Z113 20BK (LUXURY)
15	Q3 20OR/TN
16	Q4 20OR/YL
17	Q5 20OR/LB
18	Z171 20BK/GY (REAR PARK ASSIST)
19	D777 20WT/GY (REAR PARK ASSIST)
20	-

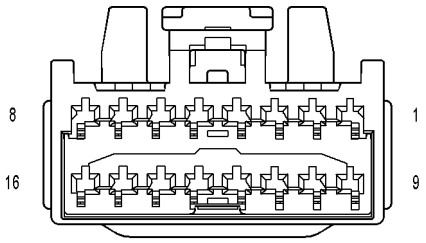

C312
(SIDE AIRBAG)

C312 (SIDE AIRBAG) - (BODY SIDE)

CAV	CIRCUIT
1	M27 20YL/LB
1	M27 20YL/LB (FRONT CONSOLE)
2	M22 20YL/OR
3	G23 22VT/DB (POWER SLIDING DOOR)
4	G25 22VT/TN (HIGHLINE)
5	D25 20WT/VT (DRIVER SIDE POWER SLIDING DOOR/EXCEPT EXPORT)
5	D25 20WT/VT (HIGHLINE)
6	A114 18GY/RD (HIGHLINE)
7	F503 20WT/PK (HIGHLINE)
8	X777 20DG/GY (REAR PARK ASSIST)
9	P112 22TN/OR (LUXURY)
10	P114 22TN/WT (LUXURY)
11	M21 20YL/BR
12	Z837 20BK/WT
12	Z113 20BK/WT (EXCEPT BASE)
13	Z13 20BK/WT
14	Z113 20BK/WT (EXCEPT BASE)
15	Z171 20BK/GY (REAR PARK ASSIST)
16	D777 20WT/GY (REAR PARK ASSIST)

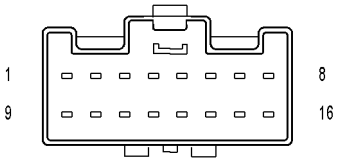

C312
(SIDE AIRBAG)

C312 (SIDE AIRBAG) - (HEADLINER SIDE)

CAV	CIRCUIT
1	M27 20YL/LB
1	M27 20YL/LB (EXCEPT BASE)
2	M22 20YL/OR
3	G23 20VT/DB (EXCEPT BASE)
3	G23 22VT/DB (PREMIUM/LUXURY)
4	G25 20VT/TN (EXCEPT BASE)
4	G25 22VT/TN (PREMIUM/LUXURY)
5	D25 20WT/VT (EXCEPT BASE)
6	A114 20GY/RD (EXCEPT BASE)
7	F503 20WT/PK (EXCEPT BASE)
7	F503 20BK/PK (PREMIUM/LUXURY)
8	X777 20DG/GY (REAR PARK ASSIST)
9	P112 22BK/OR (LUXURY)
10	P114 22BK/LB (LUXURY)
11	M21 20YL/BR
12	Z837 20BK/OR (EXCEPT BASE/EXCEPT EXPORT)
12	Z327 20BK/OR (EXCEPT BASE/EXCEPT EXPORT)
12	Z137 20BK/LB (EXPORT/BASE)
13	Z13 20BK/WT (EXCEPT BASE)
14	Z113 20BK/DB (EXCEPT BASE)
14	Z113 20BK/WT (EXPORT)
14	Z113 20BK (LUXURY)
15	Z171 20BK/GY (REAR PARK ASSIST)
16	D777 20WT/GY (REAR PARK ASSIST)

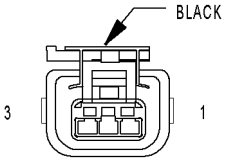

C313
(REAR CONSOLE)

C313 (REAR CONSOLE) - BLACK (BODY SIDE)

CAV	CIRCUIT
1	Z747 18BK/LB
2	F307 18LB/PK
3	F307 18LB/PK

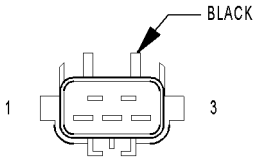

C313
(REAR CONSOLE)

C313 (REAR CONSOLE) - BLACK (REAR CONSOLE SIDE)

CAV	CIRCUIT
1	Z747 16BK
1	Z747 16BK
2	F307 18OR
3	F307 16RD

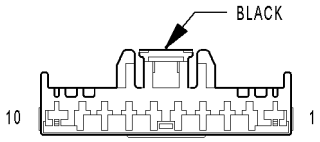

C314

C314 - BLACK (BODY SIDE)

CAV	CIRCUIT
1	C15 12DB/WT (EXCEPT POWER LIFTGATE/EXCEPT EXPORT)
1	G32 20VT/LB (POWER LIFTGATE)
2	L77 18WT/BR
3	L50 18WT/TN
4	P30 20TN/DG
5	P31 20TN/YL (POWER RELEASE)
6	G78 20VT/OR (EXCEPT POWER LIFTGATE)
6	Q60 22OR/YL (POWER LIFTGATE)
7	M11 20YL/VT (EXCEPT POWER LIFTGATE/EXCEPT EXPORT)
7	Q84 18TN/GY (POWER LIFTGATE)
8	W13 18BR/LG (EXCEPT POWER LIFTGATE)
8	Z87 20BK/LG (POWER LIFTGATE)
9	F302 18GY/PK (EXCEPT POWER LIFTGATE/EXCEPT EXPORT)
9	Q83 18OR/GY (POWER LIFTGATE)
10	Z800 12BK

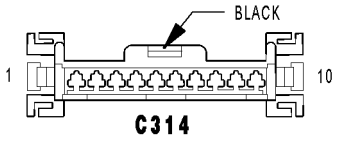

C314 - BLACK (LIFTGATE SIDE)

CAV	CIRCUIT
1	C15 12DB/WT (EXCEPT POWER LIFTGATE)
1	G32 20VT/LB (POWER LIFTGATE)
2	L77 18WT/BR
3	L50 18WT/TN
4	P30 20TN/DG
5	P31 20TN/YL (POWER RELEASE)
6	G78 20VT/OR (EXCEPT POWER LIFTGATE)
6	Q60 20OR/YL (POWER LIFTGATE)
7	M11 20YL/VT (EXCEPT POWER LIFTGATE)
7	Q84 18TN/GY (POWER LIFTGATE)
8	W13 18BR/LG (EXCEPT POWER LIFTGATE)
8	Z87 20BK/LG (POWER LIFTGATE)
9	F302 18GY/PK (EXCEPT POWER LIFTGATE)
9	Q83 18OR/GY (POWER LIFTGATE)
10	Z800 12BK

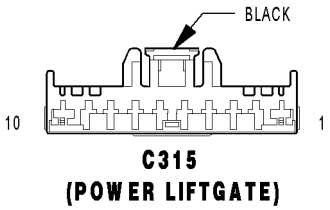

C315 (POWER LIFTGATE) - BLACK (BODY SIDE)

CAV	CIRCUIT
1	C15 12DB/WT
2	Q76 22OR/LB
3	G78 20VT/OR
4	M11 20YL/VT
5	-
6	Q85 18TN/WT
7	Q94 22TN/LG
8	W13 18BR/LG
9	F302 18GY/PK
10	-

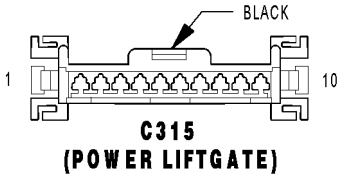

C315 (POWER LIFTGATE) - BLACK (LIFTGATE SIDE)

CAV	CIRCUIT
1	C15 12DB/WT
2	Q76 20OR/LB
3	G78 20VT/OR
4	M11 20YL/VT
5	-
6	Q85 18TN/WT
7	Q94 20TN/LG
8	W13 18BR/LG
9	F302 18GY/PK
10	-

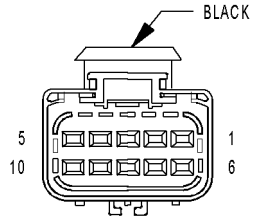

C316
(POWER SLIDING DOOR)

C316 (POWER SLIDING DOOR) - BLACK (LEFT DOOR WIRE TRACK ASSEMBLY SIDE)

CAV	CIRCUIT
1	P5 20BK/DB
2	P32 20BK/TN
3	G77 20BK/DG
4	Z825 14BK
5	-
6	-
7	G151 20BK/GY
8	D25 20WT/VT
9	-
10	A113 14BK/RD

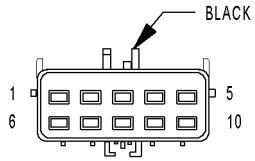

C316
(POWER SLIDING DOOR)

C316 (POWER SLIDING DOOR) - BLACK (LEFT SLIDING DOOR SIDE)

CAV	CIRCUIT
1	P5 20TN/OR
2	P32 20TN/VT
3	G77 20TN/OR
4	Z825 14BK/WT
5	-
6	-
7	G151 20VT/BR
8	D25 20WT/VT
9	-
10	A113 14WT/RD

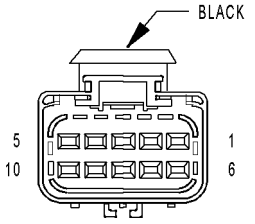

C317
(POWER SLIDING DOOR)

C317 (POWER SLIDING DOOR) - BLACK (RIGHT DOOR WIRE TRACK ASSEMBLY SIDE)

CAV	CIRCUIT
1	P38 20BK/DB
2	P34 20BK/TN
3	G76 20BK/DG
4	Z824 14BK
5	-
6	-
7	G152 20BK/GY
8	D25 20WT/VT
9	-
10	A113 14BK/RD

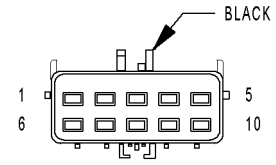

C317
(POWER SLIDING DOOR)

C317 (POWER SLIDING DOOR) - BLACK (RIGHT SLIDING DOOR SIDE)

CAV	CIRCUIT
1	P38 20TN/DB
2	P34 20TN/LB
3	G76 20TN/OR
4	Z824 14BK/WT
5	-
6	-
7	G152 20VT/GY
8	D25 20WT/VT
9	-
10	A113 14WT/RD

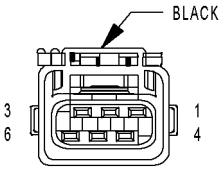

C318
(TRAILER TOW)

C318 (TRAILER TOW) - BLACK (BODY SIDE)

CAV	CIRCUIT
1	L63 18WT/DG
2	-
3	L77 18WT/BR
4	L1 18WT/LG
5	Z363 18BK/DG
6	-

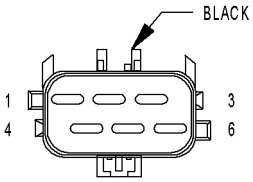

C318
(TRAILER TOW)

C318 (TRAILER TOW) - BLACK (LEFT HARNESS SIDE)

CAV	CIRCUIT
1	L63 18WT/DG
1	L63 18YL
2	-
3	L77 18BR
3	L77 18WT/BR
4	L1 18WT/BR
5	Z363 18BK/DG
6	-

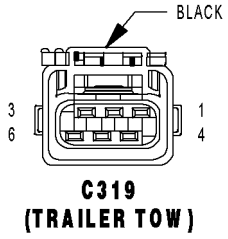

C319 (TRAILER TOW) - BLACK (BODY SIDE)

CAV	CIRCUIT
1	L62 18WT/BR
2	-
3	L78 18WT/TN
4	L1 18WT/LG
5	Z362 18BK/BR
6	-

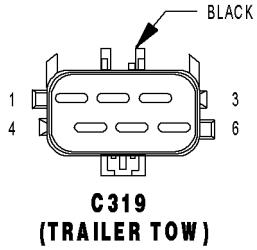

C319 (TRAILER TOW) - BLACK (RIGHT HARNESS SIDE)

CAV	CIRCUIT
1	L62 18LG
1	L62 18WT/BR
2	-
3	L78 18WT/TN
4	L1 18WT/PK
5	Z362 18WT
5	Z362 18BR/OR
6	-

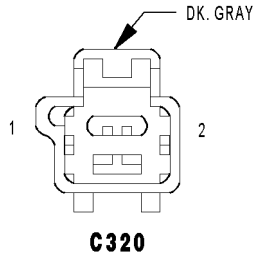

C320 - DK. GRAY (POWER SEAT SIDE)

CAV	CIRCUIT
1	Z849 14BK/OR
2	A210 14OR/RD

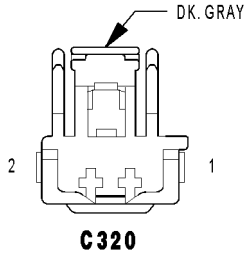

C320 - DK. GRAY (SEAT SIDE)

CAV	CIRCUIT
1	Z849 14BK/OR
2	A210 14OR/RD

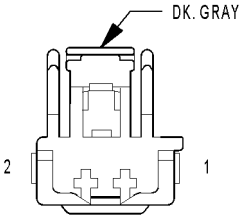

C321

C321 - DK. GRAY (SEAT SIDE)

CAV	CIRCUIT
1	Z848 18BK/OR
2	A210 14OR/RD

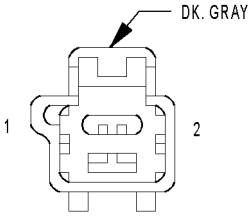

C321

C321 - DK. GRAY (POWER SEAT SIDE)

CAV	CIRCUIT
1	Z848 14BK/OR
2	A210 14OR/RD

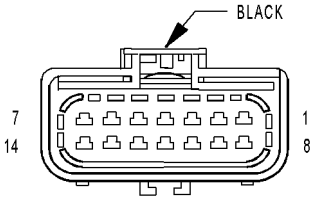

C322
(MEMORY)

C322 (MEMORY) - BLACK (BODY SIDE)

CAV	CIRCUIT
1	P69 22TN/DB (LHD)
1	P66 22TN/LG (RHD)
2	-
3	P64 22TN (LHD)
3	P67 22TN/OR (RHD)
4	-
5	-
6	P65 22TN/VT (LHD)
6	P68 22TN/YL (RHD)
7	D25 20WT/VT
8	P73 20TN/YL (LHD)
8	P70 20TN/LB (RHD)
9	P75 20TN/LG (LHD)
9	P74 20TN/DB (RHD)
10	P71 20TN/DG (LHD)
10	P72 20TN/GY (RHD)
11	-
12	-
13	-
14	-

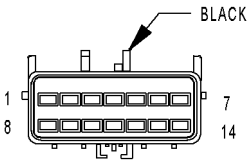

C322
(MEMORY)

C322 (MEMORY) - BLACK (POWER SEAT SIDE)

CAV	CIRCUIT
1	P69 22TN/WT (LHD)
1	P66 22WT (RHD)
2	-
3	P64 22TN/OR (LHD)
3	P67 22OR (RHD)
4	-
5	-
6	P65 22TN/YL (LHD)
6	P68 22YL (RHD)
7	D25 20WT/VT
8	P73 18TN/LB (LHD)
8	P70 18LB (RHD)
9	P75 18DB (LHD)
9	P74 18TN/DB (RHD)
10	P71 18TN/GY (LHD)
10	P72 18GY (RHD)
11	-
12	-
13	-
14	-

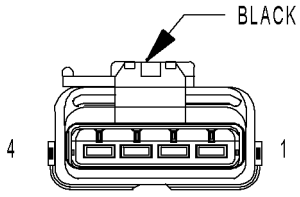

C324
(MANUAL SLIDING DOOR)

C324 (MANUAL SLIDING DOOR) - BLACK (LEFT DOOR WIRE TRACK ASSEMBLY SIDE)

CAV	CIRCUIT
1	P38 20BK/DB
2	P34 20BK/TN
3	G76 20BK/DG
4	Z76 20BK

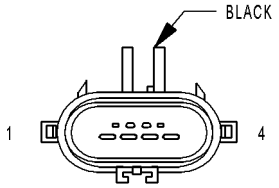

C324
(MANUAL SLIDING DOOR)

C324 (MANUAL SLIDING DOOR) - BLACK (LEFT MANUAL SLIDING DOOR SIDE)

CAV	CIRCUIT
1	P5 20BK/DB
2	P32 20BK/TN
3	G77 20BK/DG
4	Z77 20BK

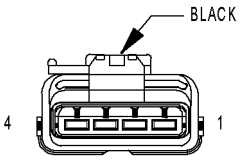

C325
(MANUAL SLIDING DOOR)

C325 (MANUAL SLIDING DOOR) - BLACK
(RIGHT DOOR WIRE TRACK ASSEMBLY SIDE)

CAV	CIRCUIT
1	P38 20BK/DB
2	P34 20BK/TN
3	G76 20BK/DG
4	Z76 20BK

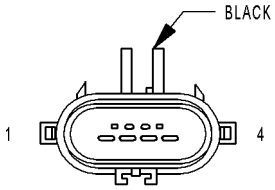

C325
(MANUAL SLIDING DOOR)

C325 (MANUAL SLIDING DOOR) - BLACK
(RIGHT MANUAL SLIDING DOOR SIDE)

CAV	CIRCUIT
1	P38 20BK/DB
2	P34 20BK/TN
3	G76 20BK/DG
4	Z76 20BK

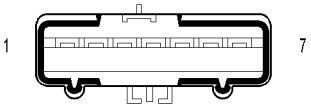

C328
(SUNROOF)

C328 (SUNROOF) - (BODY SIDE)

CAV	CIRCUIT
1	Q3 20OR/TN
2	Q5 20OR/LB
3	Q4 20OR/YL
4	F302 18GY/PK
5	A115 12YL/RD
6	Z138 12BK/DB
7	-

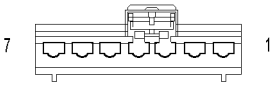

C328
(SUNROOF)

C328 (SUNROOF) - (SUNROOF SIDE)

CAV	CIRCUIT
1	Q3 20OR/TN
2	Q5 20OR/LB
3	Q4 20OR/YL
4	F302 18GY/PK
5	A115 14YL/RD
6	Z138 14BK/DB
7	-

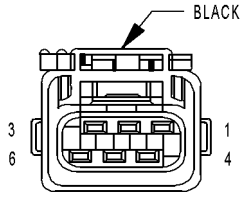

C329
(DIESEL)

C329 (DIESEL) - BLACK (BODY SIDE)

CAV	CIRCUIT
1	N2 18DB/YL
2	Z201 18BK/OR
3	N1 16DB/OR
4	Z201 18BK/OR
5	F853 20LG/PK
6	K900 18DB/DG

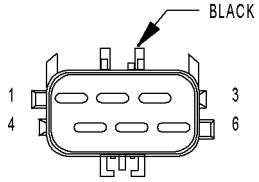

C329
(DIESEL)

C329 (DIESEL) - BLACK (LIFT PUMP SIDE)

CAV	CIRCUIT
1	N2 18OR
2	Z201 18OR
3	N1 16RD
4	Z201 18RD
5	F853 20RD
6	K900 18RD

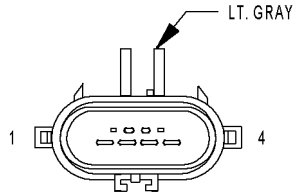

C330
(DIESEL)

C330 (DIESEL) - LT. GRAY (CABIN HEATER JUMPER SIDE)

CAV	CIRCUIT
1	A119 16RD/OR
2	C41 20LB/DG
3	D21 20WT
4	Z149 16BK/DB

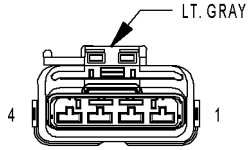

C330
(DIESEL)

C330 (DIESEL) - LT. GRAY (POWERTRAIN SIDE)

CAV	CIRCUIT
1	A119 16RD/OR
2	C41 20LB/DG
3	D21 20WT/DG
4	Z149 16BK/DB

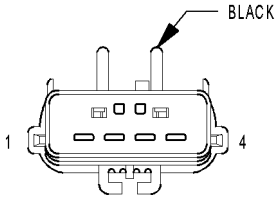

C331
(DIESEL)

C331 (DIESEL) - BLACK (CABIN HEATER COMPONENT SIDE)

CAV	CIRCUIT
1	A119 14RD/OR
2	C41 20DB/OR
3	D21 20WT/DB
4	Z149 14BK/DB

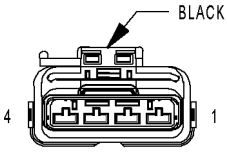

C331
(DIESEL)

C331 (DIESEL) - BLACK (CABIN HEATER JUMPER SIDE)

CAV	CIRCUIT
1	A119 16RD/OR
2	C41 20LB/DG
3	D21 20WT
4	Z149 16BK/DB

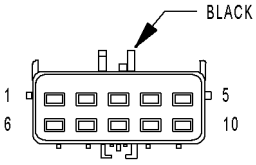

C332
(3 ZONE ATC)

C332 (3 ZONE ATC) - BLACK (COMPONENT SIDE)

CAV	CIRCUIT
1	C53 18LB
2	C169 18LB/TN
3	C51 12DB/BR
4	C59 18DB/LB
5	-
6	Z135 12BK/LB
7	C54 18LB/YL
8	C154 18LB/GY
9	-
10	-

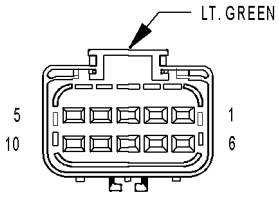

C332
(3 ZONE ATC)

C332 (3 ZONE ATC) - LT. GREEN (BODY SIDE)

CAV	CIRCUIT
1	C53 20LB
2	C169 20DB/OR
3	C51 12LB/BR
4	C59 20DB/LB
5	-
6	Z135 12BK/LB
7	C54 20LB/YL
8	C154 20LB/OR
9	-
10	-

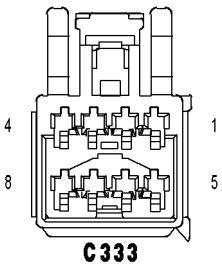

C333
(EXCEPT EXPORT/
EXCEPT MEMORY)

C333 (EXCEPT EXPORT/EXCEPT MEMORY) - (ASSEMBLY SIDE)

CAV	CIRCUIT
1	-
2	-
3	-
4	-
5	-
6	-
7	Q102 18OR/LB
8	Q103 18OR/LG

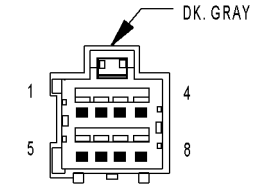

C333
(EXCEPT EXPORT/
EXCEPT MEMORY)

C333 (EXCEPT EXPORT/EXCEPT MEMORY) - DK. GRAY (BODY SIDE)

CAV	CIRCUIT
1	-
2	-
3	-
4	-
5	-
6	-
7	Q102 18OR/LB
8	Q103 18OR/LG

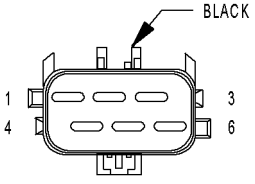

C334

C334 - BLACK (BODY SIDE)

CAV	CIRCUIT
1	D700 20WT/GY
2	D701 20WT/LB
3	D703 20WT/OR
4	D704 20WT/DB
5	X700 20GY/LB
6	X750 20GY/LB

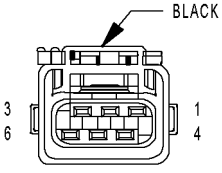

C334

C334 - BLACK (REAR FASCIA SIDE)

CAV	CIRCUIT
1	D700 20WT/GY
2	D701 20WT/LB
3	D703 20WT/OR
4	D704 20WT/DB
5	X700 20GY/LB
6	X750 20GY/LB

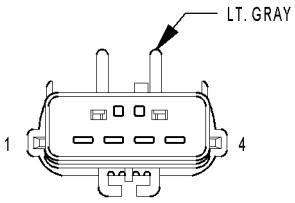

C335
(FOLD-IN-FLOOR)

C335 (FOLD-IN-FLOOR) - LT. GRAY (BODY SIDE)

CAV	CIRCUIT
1	Z201 18BK/OR
2	Z201 20BK/DB
3	N4 20DB/WT
4	N1 18DB/OR

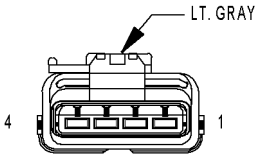

C335
(FOLD-IN-FLOOR)

C335 (FOLD-IN-FLOOR) - LT. GRAY (FUEL PUMP JUMPER SIDE)

CAV	CIRCUIT
1	Z201 18BK/OR
2	Z201 20BK/DB
3	N4 20DB/WT
4	N1 18DB/OR

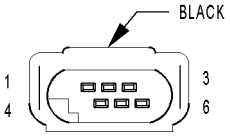

CABIN HEATER
ASSIST C1
(DIESEL)

CABIN HEATER ASSIST C1 (DIESEL) - BLACK 6 WAY

CAV	CIRCUIT	FUNCTION
1	-	-
2	D21 20WT/DB	SCI TRANSMIT
3	-	-
4	-	-
5	C41 20DB/OR	CABIN HEATER ASSIST CONTROL
6	18RD	DOSING PUMP CONTROL

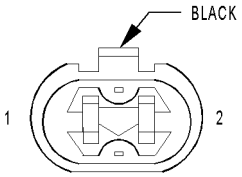

CABIN HEATER
ASSIST C2
(DIESEL)

CABIN HEATER ASSIST C2 (DIESEL) - BLACK 2 WAY

CAV	CIRCUIT	FUNCTION
1	A119 14RD/OR	FUSED B(+)
2	Z149 14BK/DB	GROUND

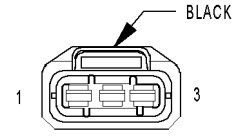

CAMSHAFT
POSITION SENSOR
(DIESEL)

CAMSHAFT POSITION SENSOR (DIESEL) - BLACK 3 WAY

CAV	CIRCUIT	FUNCTION
1	K944 20BK/GY	CAMSHAFT POSITION SENSOR GROUND
2	K44 20DB/GY	CAMSHAFT POSITION SENSOR SIGNAL
3	K342 16BR/WT	ECM/PCM RELAY OUTPUT

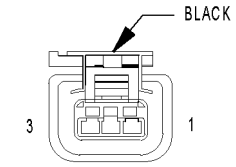

CAMSHAFT POSITION SENSOR (GAS)

CAMSHAFT POSITION SENSOR (GAS) - BLACK 3 WAY

CAV	CIRCUIT	FUNCTION
1	F855 20PK/YL (2.4L)	5 VOLT SUPPLY
1	F855 18PK/YL (3.3L/3.8L)	5 VOLT SUPPLY
2	K900 20DB/DG	SENSOR GROUND
3	K44 18DB/GY	CMP SIGNAL

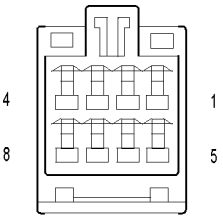

CD CHANGER

CD CHANGER - 8 WAY

CAV	CIRCUIT	FUNCTION
1	X40 22GY/WT (EXCEPT EXPORT)	AUDIO OUT RIGHT
1	X40 20GY/WT (EXPORT)	AUDIO OUT RIGHT
2	E14 22OR/TN (EXCEPT EXPORT)	PANEL LAMPS DRIVER
2	E14 18OR/TN (EXPORT)	PANEL LAMPS DRIVER
3	D25 20WT/VT (EXCEPT EXPORT)	PCI BUS
3	D25 20VT/YL (EXPORT)	PCI BUS
4	X112 20DG/GY (EXCEPT EXPORT)	IGNITION SWITCH SIGNAL
4	X112 20RD (EXPORT)	IGNITION SWITCH SIGNAL
5	X41 22DG/WT (EXCEPT EXPORT)	AUDIO OUT LEFT
5	X41 20DG/WT (EXPORT)	AUDIO OUT LEFT
6	X140 22GY/OR (EXCEPT EXPORT)	COMMON AUDIO
6	Z140 18BK/OR (EXPORT)	GROUND
7	Z141 20BK/TN (EXCEPT EXPORT)	GROUND
7	Z141 18BK/TN (EXPORT)	GROUND
8	X160 20GY/YL	FUSED B(+)

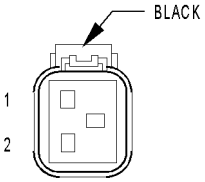

CENTER HIGH MOUNTED STOP LAMP

CENTER HIGH MOUNTED STOP LAMP - BLACK 2 WAY

CAV	CIRCUIT	FUNCTION
1	Z350 20BK/TN	GROUND
2	L50 18WT/TN (DIESEL)	PRIMARY BRAKE SWITCH SIGNAL
2	L50 18WT/TN (GAS)	BRAKE LAMP SWITCH OUTPUT

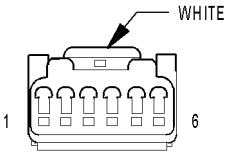

CLOCKSPRING C1

CLOCKSPRING C1 - WHITE 6 WAY

CAV	CIRCUIT	FUNCTION
1	X920 22GY/OR (REMOTE AUDIO)	RADIO CONTROL MUX RETURN
2	X20 22GY/WT (REMOTE AUDIO)	RADIO CONTROL MUX
3	X3 22DG/VT	HORN SWITCH SENSE
4	V37 22VT	SPEED CONTROL SWITCH SIGNAL
5	K900 20DB/DG	SENSOR GROUND
6	-	-

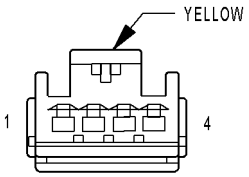

CLOCKSPRING C2

CLOCKSPRING C2 - YELLOW 4 WAY

CAV	CIRCUIT	FUNCTION
1	R61 20LG/VT (EXCEPT EXPORT)	DRIVER SQUIB 2 LINE 2
1	R61 20LB/VT (EXPORT)	DRIVER SQUIB 2 LINE 2
2	R63 20LG/WT	DRIVER SQUIB 2 LINE 1
3	R43 20LG/BR	DRIVER SQUIB 1 LINE 2
4	R45 20LG/OR	DRIVER SQUIB 1 LINE 1

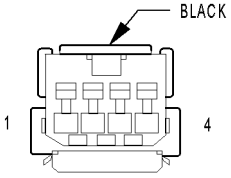

CLOCKSPRING C3

CLOCKSPRING C3 - BLACK 4 WAY

CAV	CIRCUIT	FUNCTION
1	-	-
2	Z23 20BK/VT	LEFT SPEED CONTROL SWITCH GROUND
2	Z23 20BK/VT	RIGHT SPEED CONTROL SWITCH GROUND
3	V37 20VT (DIESEL)	SPEED CONTROL SWITCH SIGNAL
3	V37 20VT (DIESEL)	SPEED CONTROL SWITCH SIGNAL
3	V37 20VT (GAS)	S/C SWITCH NO. 1 SIGNAL
3	V37 20VT (GAS)	S/C SWITCH NO. 1 SIGNAL
4	X3 20DG/VT	HORN SWITCH SENSE

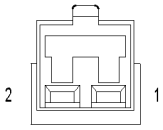

CLOCKSPRING C4 (REMOTE AUDIO)

CLOCKSPRING C4 (REMOTE AUDIO) - 2 WAY

CAV	CIRCUIT	FUNCTION
1	X10 20RD/DB	RADIO CONTROL MUX
2	X20 20RD/BK	RADIO CONTROL MUX RETURN

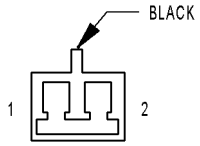

CLUTCH PEDAL INTERLOCK SWITCH (MTX)

CLUTCH PEDAL INTERLOCK SWITCH (MTX) - BLACK 2 WAY

CAV	CIRCUIT	FUNCTION
1	T141 20YL/OR	FUSED IGNITION SWITCH OUTPUT (START)
2	T751 20YL (DIESEL)	FUSED IGNITION SWITCH OUTPUT (START)
2	Z429 20BK/OR (GAS)	GROUND

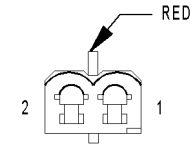

CLUTCH PEDAL UPSTOP SWITCH (DIESEL)

CLUTCH PEDAL UPSTOP SWITCH (DIESEL) - RED 2 WAY

CAV	CIRCUIT	FUNCTION
1	K119 20DB/LG	CLUTCH PEDAL UPSTOP SWITCH SENSE
2	Z150 20BK/LG	GROUND

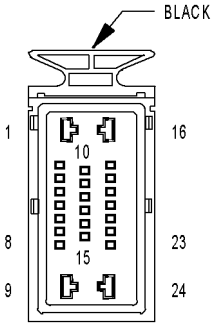

CONTROLLER ANTILOCK BRAKE

CONTROLLER ANTILOCK BRAKE - BLACK 24 WAY

CAV	CIRCUIT	FUNCTION
1	Z107 12BK/DG	GROUND
2	B1 18DG/OR	RIGHT REAR WHEEL SPEED SENSOR SIGNAL
3	B2 18DG/LB	RIGHT REAR WHEEL SPEED SENSOR 12 VOLT SUPPLY
4	-	-
5	D25 18WT/VT	PCI BUS
6	B6 18DG/WT	RIGHT FRONT WHEEL SPEED SENSOR SIGNAL
7	B7 18DG/VT	RIGHT FRONT WHEEL SPEED SENSOR 12 VOLT SUPPLY
8	-	-
9	A111 12DG/RD	FUSED B(+)
10	F500 18DG/PK	FUSED IGNITION SWITCH OUTPUT (RUN)
11	-	-
12	-	-
13	-	-
14	-	-
15	-	-
16	Z127 12BK/DG	GROUND
17	-	-
18	L50 18WT/TN (DIESEL)	PRIMARY BRAKE SWITCH SIGNAL
18	L50 18WT/TN (GAS)	BRAKE LAMP SWITCH OUTPUT
19	B3 18DG/YL	LEFT REAR WHEEL SPEED SENSOR SIGNAL
20	B4 18DG/GY	LEFT REAR WHEEL SPEED SENSOR 12 VOLT SUPPLY
21	-	-
22	B8 18DG/TN	LEFT FRONT WHEEL SPEED SENSOR SIGNAL
23	B9 18DG/WT (3.3L/3.8L)	LEFT FRONT WHEEL SPEED SENSOR 12 VOLT SUPPLY
23	B9 18DG/LG (EXCEPT 3.3L/3.8L)	LEFT FRONT WHEEL SPEED SENSOR 12 VOLT SUPPLY
24	A107 12TN/RD	FUSED B(+)

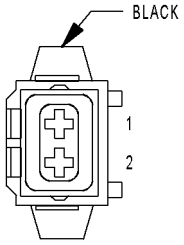

CRANK CASE VENTILATION HEATER (DIESEL)

CRANK CASE VENTILATION HEATER (DIESEL) - BLACK 2 WAY

CAV	CIRCUIT	FUNCTION
1	Z153 18BK/GY	GROUND
2	N1 18DB/OR	FUEL HEATER RELAY OUTPUT

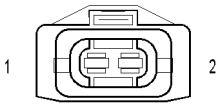

CRANKSHAFT POSITION SENSOR (DIESEL)

CRANKSHAFT POSITION SENSOR (DIESEL) - 2 WAY

CAV	CIRCUIT	FUNCTION
1	K3 20BR/OR	CRANKSHAFT POSITION SENSOR SIGNAL NO. 1
2	K24 20BR/LB	CRANKSHAFT POSITION SENSOR SIGNAL NO. 2

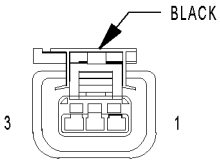

CRANKSHAFT POSITION SENSOR (GAS)

CRANKSHAFT POSITION SENSOR (GAS) - BLACK 3 WAY

CAV	CIRCUIT	FUNCTION
1	F855 20PK/YL (2.4L)	5 VOLT SUPPLY
1	F855 18PK/YL (3.3L/3.8L)	5 VOLT SUPPLY
2	K900 20DB/DG	SENSOR GROUND
3	K24 18BR/LB	CKP SIGNAL

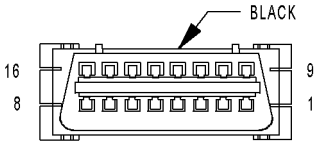

DATA LINK CONNECTOR

DATA LINK CONNECTOR - BLACK 16 WAY

CAV	CIRCUIT	FUNCTION
1	-	-
2	D25 20WT/VT	PCI BUS
3	-	-
4	Z11 20BK/LG	GROUND
5	Z111 20BK/WT	GROUND
6	-	-
7	D21 20WT/DG (DIESEL)	SCI TRANSMIT (ECM)
7	D21 20WT/DG (GAS)	SCI TRANSMIT (PCM)
8	-	-
9	D123 20WT/BR	FLASH PROGRAM ENABLE
10	-	-
11	-	-
12	D20 20WT/LG (GAS)	SCI RECEIVE (PCM)
13	-	-
14	-	-
15	D15 20DG/YL (EATX)	SCI TRANSMIT (TCM)
16	A105 20DB/RD	FUSED B(+)

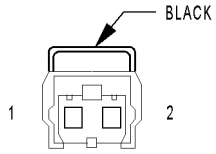

DOSING PUMP (DIESEL)

DOSING PUMP (DIESEL) - BLACK 2 WAY

CAV	CIRCUIT	FUNCTION
1	18RD	DOSING PUMP CONTROL
2	Z149 18BK/DB	GROUND

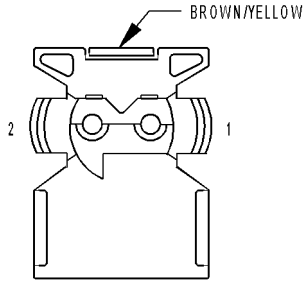

DRIVER AIRBAG SQUIB 1

DRIVER AIRBAG SQUIB 1 - BROWN/YELLOW 2 WAY

CAV	CIRCUIT	FUNCTION
1	R43 20OR/LB	DRIVER SQUIB 1 LINE 2
2	R45 20TN/LB	DRIVER SQUIB 1 LINE 1

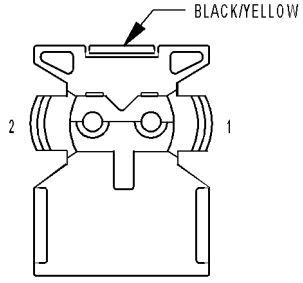

DRIVER AIRBAG SQUIB 2

DRIVER AIRBAG SQUIB 2 - BLACK/YELLOW 2 WAY

CAV	CIRCUIT	FUNCTION
1	R61 20LG/VT	DRIVER SQUIB 2 LINE 2
2	R63 20OR/LB	DRIVER SQUIB 2 LINE 1

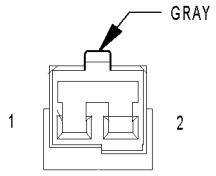

DRIVER BLEND DOOR ACTUATOR

DRIVER BLEND DOOR ACTUATOR - GRAY 2 WAY

CAV	CIRCUIT	FUNCTION
1	C61 20DB/LG (ATC)	DRIVER BLEND DOOR DRIVER (A)
1	C61 20LB/WT (LHD)	DRIVER BLEND DOOR DRIVER (A)
1	C34 20DB/LB (RHD)	COMMON DOOR DRIVER (B)
2	C161 20LB/WT (ATC)	DRIVER BLEND DOOR DRIVER (B)
2	C34 20DB/LB (LHD)	COMMON DOOR DRIVER (B)
2	C61 20LB/WT (RHD)	DRIVER BLEND DOOR DRIVER (A)

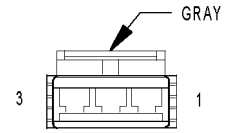

DRIVER DOOR COURTESY LAMP (LUXURY/EXPORT)

DRIVER DOOR COURTESY LAMP (LUXURY/EXPORT) - GRAY 3 WAY

CAV	CIRCUIT	FUNCTION
1	Z321 20BK/BR (LHD)	GROUND
1	Z322 20BK/BR (RHD)	GROUND
2	-	-
3	M21 20YL/BR	COURTESY LAMPS DRIVER

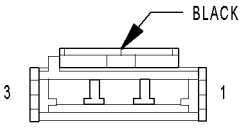

DRIVER DOOR LOCK SWITCH

DRIVER DOOR LOCK SWITCH - BLACK 3 WAY

CAV	CIRCUIT	FUNCTION
1	-	-
2	G161 20VT/DG (LHD)	LEFT DOOR LOCK SWITCH MUX
2	G160 20VT/LG (RHD)	RIGHT DOOR LOCK SWITCH MUX
3	Z461 20BK/DG (LHD)	GROUND
3	Z460 20BK/LG (RHD)	GROUND

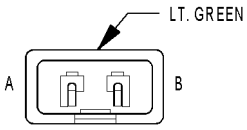

DRIVER HEATED SEAT BACK

DRIVER HEATED SEAT BACK - LT. GREEN 2 WAY

CAV	CIRCUIT	FUNCTION
A	S1 18DB (LHD)	SEAT BACK HEATER B(+) DRIVER
A	S1 18RD (RHD)	SEAT BACK HEATER B(+) DRIVER
B	S2 18DG (LHD)	SEAT BACK HEATER GROUND
B	S2 18BK (RHD)	SEAT BACK HEATER GROUND

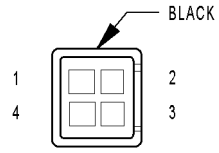

DRIVER HEATED SEAT CUSHION

DRIVER HEATED SEAT CUSHION - BLACK 4 WAY

CAV	CIRCUIT	FUNCTION
1	P87 16RD	SEAT TEMP SENSOR INPUT
2	P89 20GR	SEAT SENSOR 5 VOLT SUPPLY
3	Z849 18BK/OR	GROUND
4	P88 16GR	SEAT CUSHION HEATER B(+) DRIVER

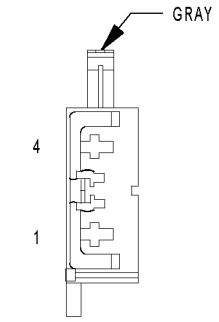

DRIVER HEATED SEAT MODULE C1

DRIVER HEATED SEAT MODULE C1 - GRAY 4 WAY

CAV	CIRCUIT	FUNCTION
1	Z849 18BK/OR	GROUND
2	P7 20LG/DG	DRIVER SEAT HEATER MUX SWITCH
3	F503 20WT/PK	FUSED IGNITION SWITCH OUTPUT (RUN)
4	A210 14OR/RD	FUSED B(+)

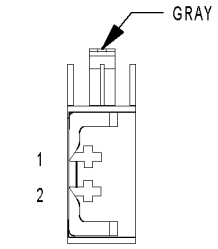

DRIVER HEATED SEAT MODULE C2

DRIVER HEATED SEAT MODULE C2 - GRAY 2 WAY

CAV	CIRCUIT	FUNCTION
1	S1 18DB (LHD)	SEAT BACK HEATER B(+) DRIVER
1	S1 18RD (RHD)	SEAT BACK HEATER B(+) DRIVER
2	S2 18DG (LHD)	SEAT BACK HEATER GROUND
2	S2 18BK (RHD)	SEAT BACK HEATER GROUND

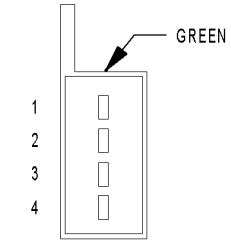

DRIVER HEATED SEAT MODULE C3

DRIVER HEATED SEAT MODULE C3 - GREEN 4 WAY

CAV	CIRCUIT	FUNCTION
1	P87 16RD	SEAT TEMP SENSOR INPUT
2	P89 20GR	SEAT SENSOR 5 VOLT SUPPLY
3	Z849 18BK/OR	GROUND
4	P88 16GR	SEAT CUSHION HEATER B(+) DRIVER

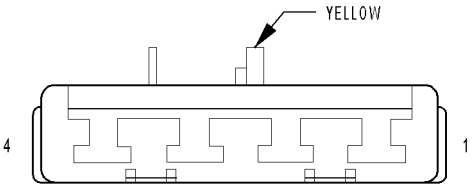

DRIVER KNEE BLOCKER AIRBAG SQUIB (LHD)

DRIVER KNEE BLOCKER AIRBAG SQUIB (LHD) - YELLOW 4 WAY

CAV	CIRCUIT	FUNCTION
1	-	
2	-	
3	R9 20LB/YL	DRIVER KNEE BLOCKER SQUIB LINE 1
4	R11 20LB/DB	DRIVER KNEE BLOCKER SQUIB LINE 2

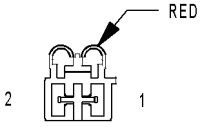

DRIVER POWER SEAT FRONT RISER MOTOR

DRIVER POWER SEAT FRONT RISER MOTOR - RED 2 WAY

CAV	CIRCUIT	FUNCTION
1	P19 14LG/LB (EXCEPT MEMORY)	DRIVER FRONT UP SWITCH SENSE
1	P121 14LG/DB (MEMORY EXCEPT EXPORT)	SEAT FRONT DOWN DRIVER
1	P119 14LG/DG (MEMORY EXPORT)	SEAT FRONT UP DRIVER
2	P21 14LG/TN (EXCEPT MEMORY)	DRIVER FRONT DOWN SWITCH SENSE
2	P121 14LG/DB (MEMORY EXCEPT EXPORT)	SEAT FRONT DOWN DRIVER
2	P119 14LG/DG (MEMORY EXPORT)	SEAT FRONT UP DRIVER

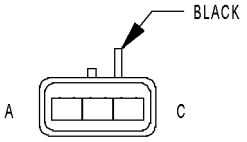

DRIVER POWER SEAT FRONT RISER POSITION SENSOR

DRIVER POWER SEAT FRONT RISER POSITION SENSOR - BLACK 3 WAY

CAV	CIRCUIT	FUNCTION
A	P28 20LG/BR	SEAT POSITION SENSOR GROUND
B	P26 20LG	FRONT RISER POSITION SIGNAL
C	P29 20LG/WT	SEAT SENSOR 5 VOLT SUPPLY

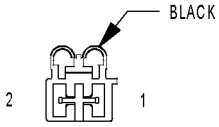

DRIVER POWER SEAT HORIZONTAL MOTOR

DRIVER POWER SEAT HORIZONTAL MOTOR - BLACK 2 WAY

CAV	CIRCUIT	FUNCTION
1	P17 14LG/DG (EXCEPT MEMORY)	DRIVER SEAT HORIZONTAL REARWARD SWITCH SENSE
1	P117 14LG/LB (MEMORY EXCEPT EXPORT)	SEAT HORIZONTAL REARWARD DRIVER
1	P115 14LG (MEMORY EXPORT)	SEAT HORIZONTAL FORWARD DRIVER
2	P15 14LG/WT (EXCEPT MEMORY)	DRIVER SEAT HORIZONTAL FORWARD SWITCH SENSE
2	P115 14LG/OR (MEMORY EXCEPT EXPORT)	SEAT HORIZONTAL FORWARD DRIVER
2	P117 14LG/LB (MEMORY EXPORT)	SEAT HORIZONTAL REARWARD DRIVER

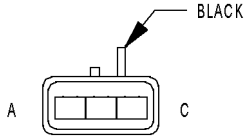

DRIVER POWER SEAT HORIZONTAL POSITION SENSOR

DRIVER POWER SEAT HORIZONTAL POSITION SENSOR - BLACK 3 WAY

CAV	CIRCUIT	FUNCTION
A	P29 20LG/WT	SEAT SENSOR 5 VOLT SUPPLY
B	P25 20LG/VT	SEAT HORIZONTAL POSITION SIGNAL
C	P28 20LG/BR	SEAT POSITION SENSOR GROUND

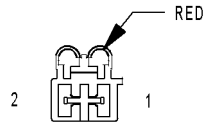

DRIVER POWER SEAT REAR RISER MOTOR

DRIVER POWER SEAT REAR RISER MOTOR - RED 2 WAY

CAV	CIRCUIT	FUNCTION
1	P11 14LG/YL (EXCEPT MEMORY)	DRIVER SEAT REAR UP SWITCH SENSE
1	P111 14LG/YL (MEMORY EXCEPT EXPORT)	SEAT REAR UP DRIVER
1	P113 14LG/WT (MEMORY EXPORT)	SEAT REAR DOWN DRIVER
2	P13 14LG/OR (EXCEPT MEMORY)	DRIVER SEAT REAR DOWN SWITCH SENSE
2	P113 14LG/VT (MEMORY EXCEPT EXPORT)	SEAT REAR DOWN DRIVER
2	P111 14LG/YL (MEMORY EXPORT)	SEAT REAR UP DRIVER

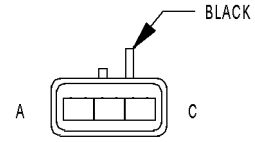

DRIVER POWER SEAT REAR RISER POSITION SENSOR

DRIVER POWER SEAT REAR RISER POSITION SENSOR - BLACK 3 WAY

CAV	CIRCUIT	FUNCTION
A	P28 20LG/BR	SEAT POSITION SENSOR GROUND
B	P27 20LG/LB	REAR RISER POSITION SIGNAL
C	P29 20LG/WT	SEAT SENSOR 5 VOLT SUPPLY

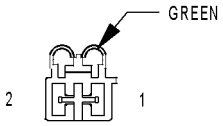

DRIVER POWER SEAT RECLINER MOTOR

DRIVER POWER SEAT RECLINER MOTOR - GREEN 2 WAY

CAV	CIRCUIT	FUNCTION
1	P41 14LG/GY (EXCEPT MEMORY)	DRIVER SEAT RECLINER DOWN SWITCH SENSE
1	P141 14LG/BR (MEMORY EXCEPT EXPORT)	SEAT RECLINER DOWN DRIVER
1	P143 14LG/GY (MEMORY EXPORT)	SEAT RECLINER UP DRIVER
2	P43 14LG/VT (EXCEPT MEMORY)	DRIVER SEAT RECLINER UP SWITCH SENSE
2	P143 14LG/GY (MEMORY EXCEPT EXPORT)	SEAT RECLINER UP DRIVER
2	P141 14LG/BR (MEMORY EXPORT)	SEAT RECLINER DOWN DRIVER

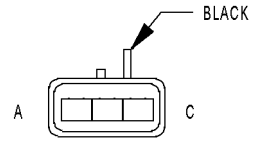

DRIVER POWER SEAT RECLINER POSITION SENSOR

DRIVER POWER SEAT RECLINER POSITION SENSOR - BLACK 3 WAY

CAV	CIRCUIT	FUNCTION
A	P29 20LG/WT	SEAT SENSOR 5 VOLT SUPPLY
B	P47 20LG/LB	RECLINER POSITION SIGNAL
C	P28 20LG/BR	SEAT POSITION SENSOR GROUND

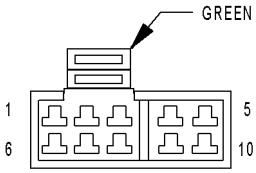

DRIVER POWER SEAT SWITCH

DRIVER POWER SEAT SWITCH - GREEN 10 WAY

CAV	CIRCUIT	FUNCTION
1	Z849 14BK/OR (EXCEPT MEMORY)	GROUND
1	Z849 20BK/OR (MEMORY)	GROUND
2	P43 14LG/VT (EXCEPT MEMORY)	DRIVER SEAT RECLINER UP SWITCH SENSE
2	P43 14LG/VT (MEMORY)	DRIVER SEAT RECLINER UP SWITCH SENSE
3	P17 14LG/DG (EXCEPT MEMORY)	DRIVER SEAT HORIZONTAL REARWARD SWITCH SENSE
3	P17 20LG/DG (MEMORY)	DRIVER SEAT HORIZONTAL REARWARD SWITCH SENSE
4	P41 14LG/GY (EXCEPT MEMORY)	DRIVER SEAT RECLINER DOWN SWITCH SENSE
4	P41 14LG/GY (MEMORY)	DRIVER SEAT RECLINER DOWN SWITCH SENSE
5	A210 14OR/RD (EXCEPT MEMORY)	FUSED SEAT SWITCH DRIVER
5	P9 20LG/OR (MEMORY)	SEAT SWITCH B(+) SUPPLY
6	P15 14LG/WT (EXCEPT MEMORY)	DRIVER SEAT HORIZONTAL FORWARD SWITCH SENSE
6	P15 20LG/WT (MEMORY)	DRIVER SEAT HORIZONTAL FORWARD SWITCH SENSE
7	P19 14LG/LB (EXCEPT MEMORY)	DRIVER SEAT FRONT UP SWITCH SENSE
7	P19 20LG/LB (MEMORY)	DRIVER SEAT FRONT UP SWITCH SENSE
8	P11 14LG/YL (EXCEPT MEMORY)	DRIVER SEAT REAR UP SWITCH SENSE
8	P11 20LG/YL (MEMORY)	DRIVER SEAT REAR UP SWITCH SENSE
9	P13 14LG/OR (EXCEPT MEMORY)	DRIVER SEAT REAR DOWN SWITCH SENSE
9	P13 20LG/OR (MEMORY)	DRIVER SEAT REAR DOWN SWITCH SENSE
10	P21 14LG/TN (EXCEPT MEMORY)	DRIVER SEAT FRONT DOWN SWITCH SENSE
10	P21 20LG/TN (MEMORY)	DRIVER SEAT FRONT DOWN SWITCH SENSE

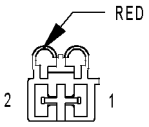

DRIVER POWER WINDOW MOTOR

DRIVER POWER WINDOW MOTOR - RED 2 WAY

CAV	CIRCUIT	FUNCTION
1	Q11 16OR/LG	DRIVER WINDOW SWITCH DRIVER (UP)
2	Q21 16OR/WT	DRIVER WINDOW SWITCH DRIVER (DOWN)

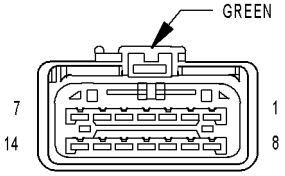

DRIVER POWER WINDOW SWITCH (LHD EXCEPT LOWLINE)

DRIVER POWER WINDOW SWITCH (LHD EXCEPT LOWLINE) - GREEN 14 WAY

CAV	CIRCUIT	FUNCTION
1	Q24 16OR/DG	PASSENGER SIDE REAR WINDOW OPEN
2	Q16 12OR/TN	MASTER WINDOW SWITCH PASSENGER (UP)
3	Q13 16OR/DB	DRIVER SIDE REAR WINDOW CLOSE
4	Q26 14OR/GY (EXCEPT MEMORY)	MASTER WINDOW SWITCH PASSENGER (DOWN)
4	Q26 12OR/GY (MEMORY)	MASTER WINDOW SWITCH PASSENGER (DOWN)
5	Q14 16OR/BR	PASSENGER SIDE REAR WINDOW CLOSE
6	Q11 16OR/LG	MASTER WINDOW SWITCH DRIVER (UP)
7	Q23 16OR/LB	DRIVER SIDE REAR WINDOW OPEN
8	Q21 16OR/WT	MASTER WINDOW SWITCH DRIVER (DOWN)
9	F304 12WT/PK	FUSED WINDOW CIRCUIT BREAKER OUTPUT
10	-	-
11	F304 12WT/PK	FUSED WINDOW CIRCUIT BREAKER OUTPUT
12	-	-
13	Z421 12BK/BR	GROUND
14	F304 16WT/PK	FUSED WINDOW CIRCUIT BREAKER OUTPUT

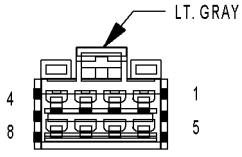

DRIVER POWER WINDOW SWITCH (LHD LOWLINE)

DRIVER POWER WINDOW SWITCH (LHD LOWLINE) - LT. GRAY 8 WAY

CAV	CIRCUIT	FUNCTION
1	F304 12WT/PK	FUSED WINDOW CIRCUIT BREAKER OUTPUT
2	Z421 12BK/BR	GROUND
3	Z421 12BK/BR	GROUND
4	-	-
5	Q21 16OR/WT	MASTER WINDOW SWITCH DRIVER (DOWN)
6	-	-
7	-	-
8	Q11 16OR/LG	MASTER WINDOW SWITCH DRIVER (UP)

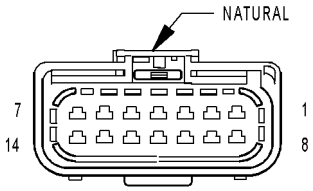

DRIVER POWER WINDOW SWITCH (RHD)

DRIVER POWER WINDOW SWITCH (RHD) - NATURAL 14 WAY

CAV	CIRCUIT	FUNCTION
1	Q23 16OR/LB	DRIVER SIDE REAR WINDOW OPEN
2	Q11 16OR/LG	MASTER WINDOW SWITCH DRIVER (UP)
3	Q14 16OR/BR	PASSENGER SIDE REAR WINDOW CLOSE
4	Q26 14OR/GY (EXCEPT MEMORY)	MASTER WINDOW SWITCH PASSENGER (DOWN)
4	Q26 12OR/GY (MEMORY)	MASTER WINDOW SWITCH PASSENGER (DOWN)
5	Q13 16OR/DB	DRIVER SIDE REAR WINDOW CLOSE
6	Q16 12OR/TN	MASTER WINDOW SWITCH PASSENGER (UP)
7	Q24 16OR/DG	PASSENGER SIDE REAR WINDOW OPEN
8	F304 16WT/PK	FUSED WINDOW CIRCUIT BREAKER OUTPUT
9	Z421 12BK/BR	GROUND
10	-	-
11	F304 12WT/PK	FUSED WINDOW CIRCUIT BREAKER OUTPUT
12	-	-
13	F304 12WT/PK	FUSED WINDOW CIRCUIT BREAKER OUTPUT
14	Q21 16OR/WT	MASTER WINDOW SWITCH DRIVER (DOWN)

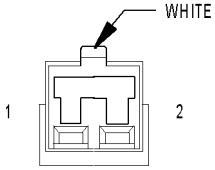

DRIVER SEAT BELT SWITCH

DRIVER SEAT BELT SWITCH - WHITE 2 WAY

CAV	CIRCUIT	FUNCTION
1	R57 18LG/GY	DRIVER SEAT BELT SWITCH SENSE
2	R59 18LG/TN	DRIVER SEAT BELT SWITCH GROUND

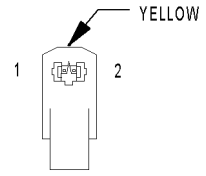

DRIVER SEAT BELT TENSIONER

DRIVER SEAT BELT TENSIONER - YELLOW 2 WAY

CAV	CIRCUIT	FUNCTION
1	R53 18LG/YL	DRIVER SEAT BELT TENSIONER LINE 2
2	R55 18LG/DG	DRIVER SEAT BELT TENSIONER LINE 1

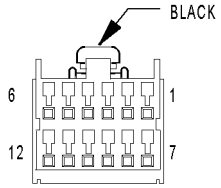

DVD SCREEN

DVD SCREEN - BLACK 12 WAY

CAV	CIRCUIT	FUNCTION
1	X114 20GY/LB	IGNITION RUN/ACC SIGNAL
2	X211 20YL/GY	IGNITION SWITCH SENSE
3	-	-
4	-	-
5	X915 22GY/LB	VIDEO RETURN
6	X515 22GY/OR	VIDEO SIGNAL
7	X530 20GY/DB	GROUND
8	-	-
9	X555 20VT/OR	VIDEO PLAY SIGNAL
10	-	-
11	-	-
12	-	-

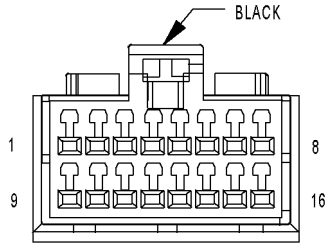

DVD/CD CHANGER C1

DVD/CD CHANGER C1 - BLACK 16 WAY

CAV	CIRCUIT	FUNCTION
1	-	-
2	-	-
3	E14 22OR/TN	PANEL LAMPS DRIVER
4	-	-
5	-	-
6	-	-
7	A114 20GY/RD	FUSED B(+) (I.O.D.)
8	X40 22GY/WT	AUDIO OUT RIGHT
9	Z530 20GY/BK	GROUND
10	-	-
11	X112 20DG/GY	IGNITION SWITCH SIGNAL
12	D25 20WT/VT	PCI BUS
13	-	-
14	-	-
15	X140 22GY/OR	COMMON AUDIO
16	X41 22DG/WT	AUDIO OUT LEFT

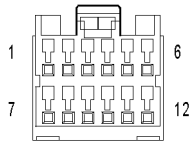

DVD/CD CHANGER C2

DVD/CD CHANGER C2 - 12 WAY

CAV	CIRCUIT	FUNCTION
1	X114 20GY/LB	IGNITION RUN/ACC SIGNAL
2	X211 20YL/GY	IGNITION SWITCH SENSE
3	-	-
4	-	-
5	X915 22GY/LB	VIDEO RETURN
6	X515 22GY/OR	VIDEO SIGNAL
7	X530 20GY/DB	GROUND
8	-	-
9	-	-
10	X555 20VT/OR	VIDEO PLAY SIGNAL
11	-	-
12	X955 20BK/GY	SHIELD

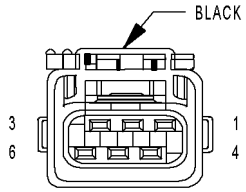

EGR SOLENOID (3.3L)

EGR SOLENOID (3.3L) - BLACK 6 WAY

CAV	CIRCUIT	FUNCTION
1	K34 18DB/LG	EGR SOLENOID SIGNAL
2	F855 18PK/YL	5 VOLT SUPPLY
3	K900 18DB/DG	SENSOR GROUND
4	Z335 18BK/DB	GROUND
5	-	-
6	K35 18DB/VT	EGR SOLENOID CONTROL

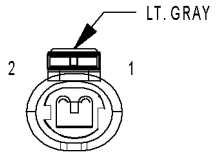

EGR SOLENOID (DIESEL)

EGR SOLENOID (DIESEL) - LT. GRAY 2 WAY

CAV	CIRCUIT	FUNCTION
1	K35 20GY/YL	EGR SOLENOID CONTROL
2	K342 16BR/WT	ECM/PCM RELAY OUTPUT

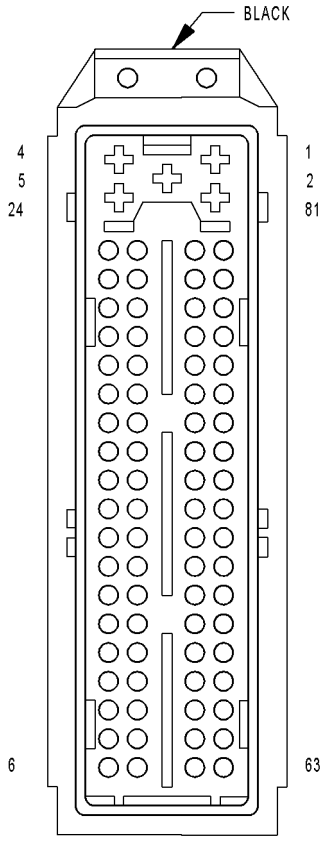

ENGINE CONTROL MODULE C1 (DIESEL)

ENGINE CONTROL MODULE C1 (DIESEL) - BLACK 81 WAY

CAV	CIRCUIT	FUNCTION
1	Z130 14BK/BR	GROUND
2	Z131 14BK/DG	GROUND
3	K20 14BR/GY	GENERATOR FIELD CONTROL
4	K342 14BR/WT	ECM/PCM RELAY OUTPUT
5	K342 14BR/WT	ECM/PCM RELAY OUTPUT
6	-	-
7	D25 20WT/VT	PCI BUS
8	K944 20BK/GY	CAMSHAFT POSITION SENSOR SHIELD GROUND
9	K44 20DB/GY	CAMSHAFT POSITION SENSOR SIGNAL
10	-	-
11	K37 20DB/YL	BOOST PRESSURE SENSOR SIGNAL
12	K55 20DB/OR	MASS AIR FLOW SENSOR SIGNAL
13	K78 20GY	FUEL PRESSURE SENSOR SIGNAL
14	-	-
15	K22 20OR/DB	ACCELERATOR PEDAL POSITION SENSOR SIGNAL NO. 1
16	K80 20DB/TN	FUEL PRESSURE SENSOR GROUND
17	-	-
18	-	-
19	K342 20BR/WT	ECM/PCM RELAY OUTPUT
20	Z138 20BK/OR	GROUND
21	K900 20DB/DG	SENSOR GROUND
22	F202 20PK/GY	FUSED IGNITION SWITCH OUTPUT (RUN-START)
23	F851 20LB/PK	SENSOR REFERENCE VOLTAGE B
24	K3 20BR/OR	CRANKSHAFT POSITION SENSOR SIGNAL NO. 1
25	-	-
26	-	-
27	-	-
28	-	-
29	-	-
30	G6 20VT/GY	ENGINE OIL PRESSURE SENSOR SIGNAL
31	F853 20LG/PK	WATER IN FUEL SENSOR SIGNAL
32	K25 20BR/TN	BATTERY TEMPERATURE SENSOR SIGNAL

ENGINE CONTROL MODULE C1 (DIESEL) - BLACK 81 WAY

CAV	CIRCUIT	FUNCTION
33	-	-
34	K4 20BK/LB	SENSOR GROUND
35	F852 20VT/PK	ACCELERATOR PEDAL POSITION SENSOR 5 VOLT SUPPLY
36	C18 20LB/BR	A/C PRESSURE SENSOR SIGNAL
37	-	-
38	V37 20VT/TN	SPEED CONTROL SWITCH SIGNAL
39	-	-
40	K2 20TN/BK	ENGINE COOLANT TEMPERATURE SENSOR SIGNAL
41	K21 20DB/LG	INTAKE AIR TEMPERATURE SENSOR SIGNAL
42	Z122 18WT	GROUND (DRAIN)
43	K24 20BR/LB	CRANKSHAFT POSITION SENSOR SIGNAL NO. 2
44	-	-
45	-	-
46	-	-
47	L50 20WT/TN	PRIMARY BRAKE SWITCH SIGNAL
48	B29 20DG/WT	SECONDARY BRAKE SWITCH SIGNAL
49	T751 20YL	FUSED IGNITION SWITCH OUTPUT (START)
50	F855 20PK/YL	SENSOR REFERENCE VOLTAGE A
51	-	-
52	K121 20DB	BOOST PRESSURE SENSOR GROUND
53	-	-
54	K957 20BK/OR	MASS AIR FLOW SENSOR GROUND
55	N7 20DB/OR	VEHICLE SPEED SENSOR SIGNAL
56	C918 20BK/LB	A/C PRESSURE SENSOR GROUND
57	T10 20DG/LG (EATX)	TORQUE MANAGEMENT REQUEST SENSE
58	-	-
59	-	-
60	K9 20LB	FUEL PRESSURE SENSOR 5 VOLT SUPPLY
61	K51 20BR/WT	ECM/PCM RELAY CONTROL
62	-	-
63	D21 20WT/DG	SCI TRANSMIT (ECM)
64	K151 20WT	LOW IDLE POSITION SWITCH SENSE
65	-	-
66	K936 20BR/YL	ENGINE OIL PRESSURE SENSOR GROUND
67	-	-
68	-	-
69	C13 20LB/OR	A/C COMPRESSOR CLUTCH RELAY CONTROL
70	N210 20DB/DG	LOW SPEED RADIATOR FAN RELAY CONTROL
71	-	-
72	N21 20DB/TN	LIFT PUMP RELAY CONTROL
73	-	-
74	T752 20DG/OR	STARTER MOTOR RELAY CONTROL
75	-	-
76	-	-
77	K152 20DB/WT	GLOW PLUG RELAY CONTROL
78	N122 20DB/YL	HIGH SPEED RADIATOR FAN DUAL RELAY CONTROL
79	-	-
80	K87 20BR	FUEL PRESSURE SOLENOID CONTROL
81	K87 20BR	FUEL PRESSURE SOLENOID CONTROL

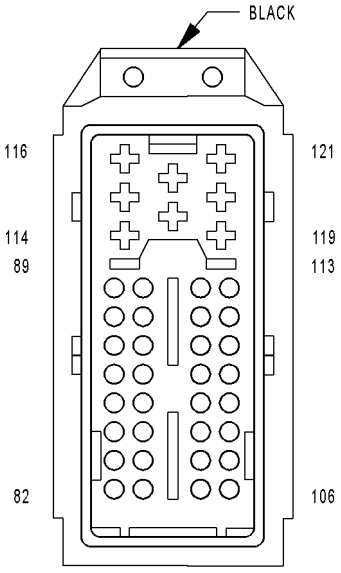

ENGINE CONTROL MODULE C2 (DIESEL)

ENGINE CONTROL MODULE C2 (DIESEL) - BLACK 40 WAY

CAV	CIRCUIT	FUNCTION
80	-	-
81	-	-
82	-	-
83	K24 20BR/LB (EATX)	CRANKSHAFT POSITION SENSOR SIGNAL NO. 2
84	-	-
85	-	-
86	-	-
87	-	-
88	K35 20GY/YL	EGR SOLENOID CONTROL
89	K35 20GY/YL	EGR SOLENOID CONTROL
90	-	-
91	-	-
92	-	-
93	-	-
94	-	-
95	-	-
96	-	-
97	-	-
98	-	-
99	-	-
100	-	-
101	-	-
102	-	-
103	-	-
104	-	-
105	-	-
106	-	-
107	-	-
108	-	-
109	-	-
110	-	-
111	-	-
112	T41 20DG/GY (EATX)	TRS T41 SENSE
112	K119 20DB/LG (MTX)	CLUTCH PEDAL UPSTOP SWITCH SENSE
113	-	-
114	-	-
115	K14 14LB/BR	FUEL INJECTOR NO. 4 CONTROL
116	K111 14DB/LB	COMMON INJECTOR DRIVER
117	-	-
118	K11 14WT/DB	FUEL INJECTOR NO. 1 CONTROL
119	K12 14TN	FUEL INJECTOR NO. 2 CONTROL
120	K13 14BR/LB	FUEL INJECTOR NO. 3 CONTROL
121	-	-

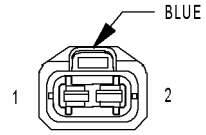

ENGINE COOLANT TEMP SENSOR (DIESEL)

ENGINE COOLANT TEMP SENSOR (DIESEL) - BLUE 2 WAY

CAV	CIRCUIT	FUNCTION
1	K2 20TN/BK	ENGINE COOLANT TEMPERATURE SENSOR SIGNAL
2	K900 20DB/DG	SENSOR GROUND

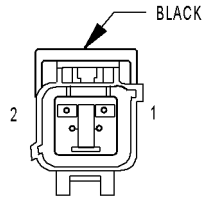

ENGINE COOLANT TEMP SENSOR (GAS)

ENGINE COOLANT TEMP SENSOR (GAS) - BLACK 2 WAY

CAV	CIRCUIT	FUNCTION
1	K900 20DB/DG	SENSOR GROUND
2	K2 18VT/OR	ECT SIGNAL

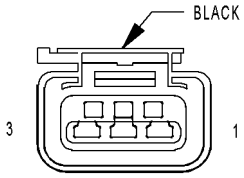

ENGINE OIL PRESSURE SENSOR (DIESEL)

ENGINE OIL PRESSURE SENSOR (DIESEL) - BLACK 3 WAY

CAV	CIRCUIT	FUNCTION
1	F855 20PK/YL	SENSOR REFERENCE VOLTAGE A
2	G6 20VT/GY	ENGINE OIL PRESSURE SENSOR SIGNAL
3	K936 20BR/YL	ENGINE OIL PRESSURE SENSOR GROUND

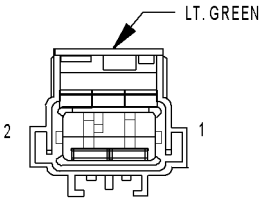

ENGINE OIL PRESSURE SWITCH (GAS)

ENGINE OIL PRESSURE SWITCH (GAS) - LT. GREEN 2 WAY

CAV	CIRCUIT	FUNCTION
1	G6 16VT/GY	OIL PRESSURE SIGNAL
2	-	-

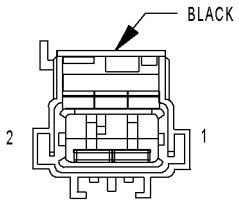

EVAP/PURGE SOLENOID (GAS)

EVAP/PURGE SOLENOID (GAS) - BLACK 2 WAY

CAV	CIRCUIT	FUNCTION
1	K52 18DB/WT	EVAP PURGE CONTROL
2	K70 18DB/BR	EVAP PURGE RETURN

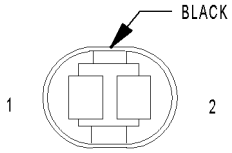

EVAPORATOR TEMPERATURE SENSOR

EVAPORATOR TEMPERATURE SENSOR - BLACK 2 WAY

CAV	CIRCUIT	FUNCTION
1	C21 20DB/LG	EVAPORATOR TEMPERATURE SENSOR SIGNAL
2	C121 20DB/DG	SENSOR GROUND

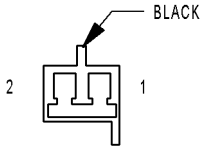

FLOOR CONSOLE LAMP

FLOOR CONSOLE LAMP - BLACK 2 WAY

CAV	CIRCUIT	FUNCTION
1	M27 18OR (FRONT POSITION)	READING LAMPS DRIVER
1	F307 18OR (REAR POSITION/ACCESSORY RELAY POSITION)	FUSED ACCESSORY RELAY OUTPUT
1	F307 18OR (REAR POSITION/BATTERY POSITION)	FUSED B(+)
2	Z746 16BK (FRONT POSITION)	GROUND
2	Z747 16BK (REAR POSITION)	GROUND

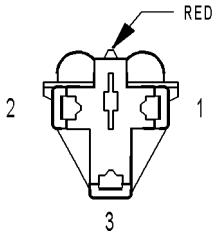

FLOOR CONSOLE POWER OUTLET (EXPORT)

FLOOR CONSOLE POWER OUTLET (EXPORT) - RED 3 WAY

CAV	CIRCUIT	FUNCTION
1	A105 16RD (FRONT POSITION)	FUSED B(+)
1	F307 16RD (REAR POSITION/ACCESSORY RELAY POSITION)	FUSED ACCESSORY RELAY OUTPUT
1	F307 16RD (REAR POSITION/BATTERY POSITION)	FUSED B(+)
2	-	-
3	Z746 16BK (FRONT POSITION)	GROUND
3	Z747 16BK (REAR POSITION)	GROUND

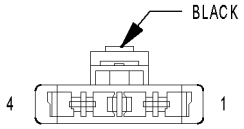

FRONT BLOWER MODULE C1 (ATC)

FRONT BLOWER MODULE C1 (ATC) - BLACK 4 WAY

CAV	CIRCUIT	FUNCTION
1	-	-
2	Z134 12BK/OR	GROUND
3	C56 20DB/LB	BLOWER MOTOR CONTROL
4	C7 12DB	FUSED FRONT BLOWER MOTOR RELAY OUTPUT

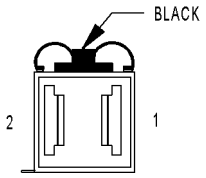

FRONT BLOWER MODULE C2 (ATC)

FRONT BLOWER MODULE C2 (ATC) - BLACK 2 WAY

CAV	CIRCUIT	FUNCTION
1	C7 12DB (EXCEPT EXPORT)	HIGH SPEED BLOWER MOTOR
1	C7 12DG (EXPORT)	HIGH SPEED BLOWER MOTOR
2	C70 12DB/YL (EXCEPT EXPORT)	BLOWER MOTOR DRIVER
2	C70 12BK (EXPORT)	BLOWER MOTOR DRIVER

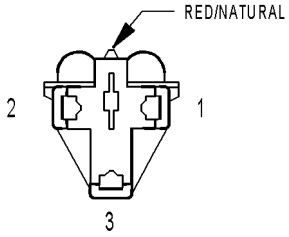

FRONT CIGAR LIGHTER

FRONT CIGAR LIGHTER - RED/NATURAL 3 WAY

CAV	CIRCUIT	FUNCTION
1	F306 18DB/PK	FUSED ACCESSORY RELAY OUTPUT
1	F306 18DB/PK	FUSED ACCESSORY RELAY OUTPUT
2	-	-
3	Z736 18BK/YL	GROUND

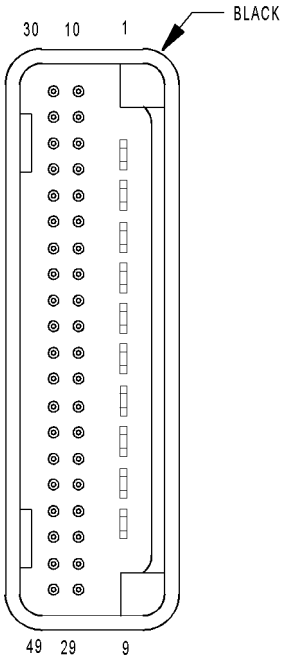

FRONT CONTROL MODULE

FRONT CONTROL MODULE - BLACK 49 WAY

CAV	CIRCUIT	FUNCTION
1	A1	B(+)
2	A1	B(+)
3	L43	LEFT LOW BEAM DRIVER
4	L34	RIGHT HIGH BEAM DRIVER
5	L33	LEFT HIGH BEAM DRIVER
6	L44	RIGHT LOW BEAM DRIVER
7	-	-
8	Z117, Z118, Z343, Z344	GROUND
9	A1	B(+)
10	FCM 10	HORN RELAY CONTROL
11	-	-
12	P201 (EXCEPT EXPORT)	ADJUSTABLE PEDALS RELAY CONTROL
13	FCM 13	PARK LAMP RELAY CONTROL
14	FCM 14	FRONT WIPER ON/OFF RELAY CONTROL
15	C41 (DIESEL)	CABIN HEATER ASSIST CONTROL
16	W7	FRONT WIPER PARK SWITCH SENSE
17	X3	HORN SWITCH SENSE
18	W1	WASHER FLUID LEVEL SWITCH SENSE
19	FCM 19	FUSED IGNITION SWITCH OUTPUT (START)
20	FCM 20	FUSED (+)
21	L78	FUSED PARK LAMP RELAY OUTPUT (RIGHT)
22	D25	PCI BUS
23	G931 (DIESEL)	AMBIENT TEMPERATURE SENSOR RETURN
24	-	NOT USED
25	G31 (DIESEL)	AMBIENT TEMPERATURE SENSOR SIGNAL
26	L13 (EXPORT)	HEADLAMP ADJUST SIGNAL
27	F1, F2	FCM OUTPUT (UNLOCK-RUN-START)
28	-	NOT USED
29	F100	ORC RUN ONLY DRIVER
30	FCM 30	FRONT/REAR BLOWER MOTOR RELAY CONTROL
31	FCM 31	DEFOGGER RELAY CONTROL
32	FCM 32 (EXPORT)	HEADLAMP WASHER RELAY CONTROL
33	FCM 33	FRONT FOG LAMP RELAY CONTROL
34	FCM 34	FRONT WIPER HIGH/LOW RELAY CONTROL
35	FCM 35	ACCESSORY RELAY CONTROL (RUN-ACC)
36	B20	BRAKE FLUID LEVEL SWITCH SENSE
37	F20	FUSED IGNITION SWITCH OUTPUT (RUN-START)
38	A1	B(+) (WHEN IPM C5 CPA IS NOT ENGAGED)
39	T2 (MTX)	TRS REVERSE SENSE
40	-	NOT USED
41	L77	FUSED PARK LAMP RELAY OUTPUT (LEFT)
42	D123	FLASH PROGRAM ENABLE
43	Z116	GROUND
44	L50 (DIESEL)	PRIMARY BRAKE SWITCH SIGNAL
44	L50 (GAS)	BRAKE LAMP SWITCH OUTPUT
45	W10	FRONT WASHER PUMP MOTOR CONTROL
46	W20	REAR WASHER PUMP MOTOR CONTROL
47	K32	BRAKE TRANSMISSION SHIFT INTERLOCK SOLENOID CONTROL
48	F201	ORC RUN-START DRIVER
49	-	-

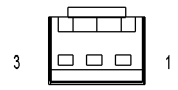

FRONT INTRUSION SENSOR (UNITED KINGDOM)

FRONT INTRUSION SENSOR (UNITED KINGDOM) - 3 WAY

CAV	CIRCUIT	FUNCTION
1	G460 20DG/VT	FRONT INTRUSION SENSOR SIGNAL
2	-	-
3	G946 20LG/VT	SENSOR GROUND

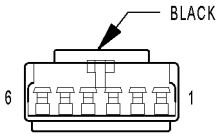

FRONT READING LAMPS/SWITCH

FRONT READING LAMPS/SWITCH - BLACK 6 WAY

CAV	CIRCUIT	FUNCTION
1	E15 20OR/DB (EXCEPT BASE)	ASH/RECEIVER LAMP FEED
2	Z137 20BK/LB	GROUND
3	-	-
4	M27 20YL/LB	READING LAMPS DRIVER
5	M21 20YL/BR	COURTESY LAMPS DRIVER
6	-	-

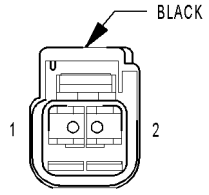

FUEL HEATER (DIESEL)

FUEL HEATER (DIESEL) - BLACK 2 WAY

CAV	CIRCUIT	FUNCTION
1	N1 16RD	FUEL HEATER RELAY OUTPUT
2	Z201 18RD	GROUND

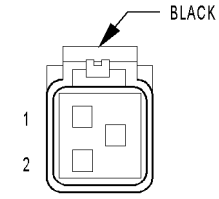

FUEL INJECTOR NO. 1 (2.4L/3.3L/3.8L)

FUEL INJECTOR NO. 1 (2.4L/3.3L/3.8L) - BLACK 2 WAY

CAV	CIRCUIT	FUNCTION
1	K342 16BR/WT	ASD RELAY OUTPUT
2	K11 16BR/YL	INJECTOR CONTROL NO. 1

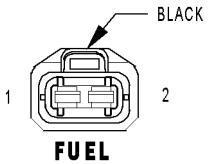

FUEL INJECTOR NO. 1 (DIESEL)

FUEL INJECTOR NO. 1 (DIESEL) - BLACK 2 WAY

CAV	CIRCUIT	FUNCTION
1	K111 14DB/LB	COMMON INJECTOR DRIVER
2	K11 14WT/DB	FUEL INJECTOR NO. 1 CONTROL

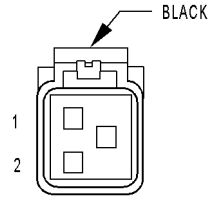

FUEL INJECTOR NO. 2 (2.4L/3.3L/3.8L)

FUEL INJECTOR NO. 2 (2.4L/3.3L/3.8L) - BLACK 2 WAY

CAV	CIRCUIT	FUNCTION
1	K342 16BR/WT	ASD RELAY OUTPUT
2	K12 16BR/DB	INJECTOR CONTROL NO. 2

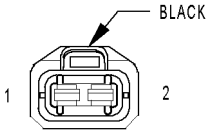

FUEL INJECTOR NO. 2 (DIESEL)

FUEL INJECTOR NO. 2 (DIESEL) - BLACK 2 WAY

CAV	CIRCUIT	FUNCTION
1	K111 14DB/LB	COMMON INJECTOR DRIVER
2	K12 14TN	FUEL INJECTOR NO. 2 CONTROL

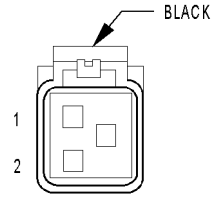

FUEL INJECTOR NO. 3 (2.4L/3.3L/3.8L)

FUEL INJECTOR NO. 3 (2.4L/3.3L/3.8L) - BLACK 2 WAY

CAV	CIRCUIT	FUNCTION
1	K342 16BR/WT	ASD RELAY OUTPUT
2	K13 16BR/LB	INJECTOR CONTROL NO. 3

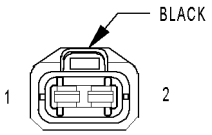

FUEL INJECTOR NO. 3 (DIESEL)

FUEL INJECTOR NO. 3 (DIESEL) - BLACK 2 WAY

CAV	CIRCUIT	FUNCTION
1	K111 14DB/LB	COMMON INJECTOR DRIVER
2	K13 14BR/LB	FUEL INJECTOR NO. 3 CONTROL

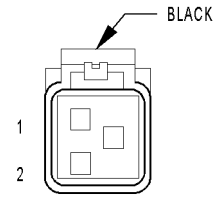

FUEL INJECTOR NO. 4 (2.4L/3.3L/3.8L)

FUEL INJECTOR NO. 4 (2.4L/3.3L/3.8L) - BLACK 2 WAY

CAV	CIRCUIT	FUNCTION
1	K342 16BR/WT	ASD RELAY OUTPUT
2	K14 16BR/TN	INJECTOR CONTROL NO. 4

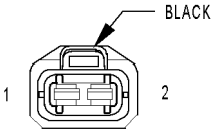

FUEL INJECTOR NO. 4 (DIESEL)

FUEL INJECTOR NO. 4 (DIESEL) - BLACK 2 WAY

CAV	CIRCUIT	FUNCTION
1	K111 14DB/LB	COMMON INJECTOR DRIVER
2	K14 14LB/BR	FUEL INJECTOR NO. 4 CONTROL

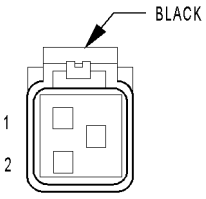

FUEL INJECTOR NO. 5 (3.3L/3.8L)

FUEL INJECTOR NO. 5 (3.3L/3.8L) - BLACK 2 WAY

CAV	CIRCUIT	FUNCTION
1	K342 16BR/WT	ASD RELAY OUTPUT
2	K38 16BR/OR	INJECTOR CONTROL NO. 5

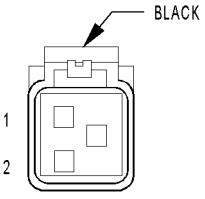

FUEL INJECTOR NO. 6 (3.3L/3.8L)

FUEL INJECTOR NO. 6 (3.3L/3.8L) - BLACK 2 WAY

CAV	CIRCUIT	FUNCTION
1	K342 16BR/WT	ASD RELAY OUTPUT
2	K58 16BR/VT	INJECTOR CONTROL NO. 6

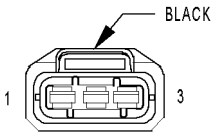

FUEL PRESSURE SENSOR (DIESEL)

FUEL PRESSURE SENSOR (DIESEL) - BLACK 3 WAY

CAV	CIRCUIT	FUNCTION
1	K80 20DB/TN	FUEL PRESSURE SENSOR GROUND
2	K78 20GY	FUEL PRESSURE SENSOR SIGNAL
3	K9 20LB	FUEL PRESSURE SENSOR 5 VOLT SUPPLY

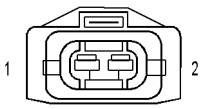

FUEL PRESSURE SOLENOID (DIESEL)

FUEL PRESSURE SOLENOID (DIESEL) - 2 WAY

CAV	CIRCUIT	FUNCTION
1	K342 16BR/WT	ECM/PCM RELAY OUTPUT
2	K87 16BR	FUEL PRESSURE SOLENOID CONTROL

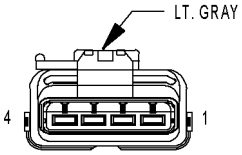

FUEL PUMP MODULE

FUEL PUMP MODULE - LT. GRAY 4 WAY

CAV	CIRCUIT	FUNCTION
1	Z201 18BK/OR (GAS)	GROUND
2	Z201 20BK/OR (DIESEL)	GROUND
2	Z201 20BK/DB (GAS)	GROUND
3	N4 20DB/WT	FUEL LEVEL SENSOR SIGNAL
4	N1 18DB/OR (GAS)	FUEL PUMP RELAY OUTPUT

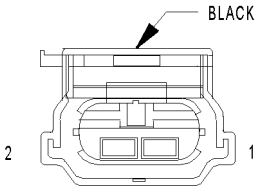

GENERATOR

GENERATOR - BLACK 2 WAY

CAV	CIRCUIT	FUNCTION
1	K342 16BR/WT (DIESEL)	ECM/PCM RELAY OUTPUT
1	Z20 18BK (GAS)	GROUND
2	K20 14BR/GY (DIESEL)	GENERATOR FIELD CONTROL
2	K20 18BR/GY (GAS)	GEN FIELD CONTROL

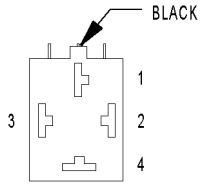

GLOW PLUG RELAY (DIESEL)

GLOW PLUG RELAY (DIESEL) - BLACK 4 WAY

CAV	CIRCUIT	FUNCTION
1	A202 10RD/WT	FUSED B(+)
2	K152 20DB/WT	GLOW PLUG RELAY CONTROL
3	K342 16BR/WT	ECM/PCM RELAY OUTPUT
4	K154 10BR/OR	GLOW PLUG RELAY OUTPUT

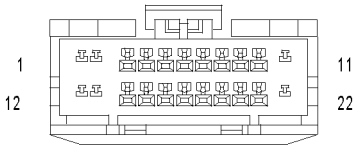

HANDS FREE MODULE C1

HANDS FREE MODULE C1 - 22 WAY

CAV	CIRCUIT	FUNCTION
1	A114 18GY/RD	FUSED(+) (I.O.D.)
2	-	-
3	-	-
4	-	-
5	X722 20BK/LB	MICROPHONE 2 IN (+)
6	-	-
7	-	-
8	-	-
9	-	-
10	-	-
11	-	-
12	L1 20BK/WT (AUTOMATIC DAY/NIGHT MIRROR)	BACK-UP LAMP FEED
13	-	-
14	-	-
15	X730 20BK/VT	VOICE RECOGNITION/PHONE SWITCH SIGNAL
16	X712 20BK/GY	MICROPHONE 1 IN (+)
17	X792 20BK/WT	MICROPHONE IN (-)
18	-	-
19	-	-
20	X793 20DB	IGNITION RUN/ACC SIGNAL
21	X835 20BK	SENSOR GROUND
22	Z530 18GY/BK (LUXURY)	GROUND

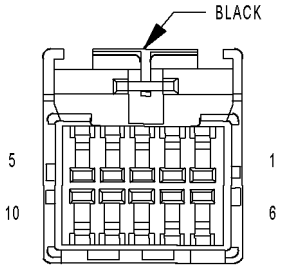

HANDS FREE MODULE C2

HANDS FREE MODULE C2 - BLACK 10 WAY

CAV	CIRCUIT	FUNCTION
1	X112 20DG/GY	IGNITION RUN/ACC SIGNAL
2	D25 20WT/VT	PCI BUS
3	-	-
4	X795 22GY/OR	AUDIO GROUND
5	X704 22GY/WT	RIGHT AUDIO OUTPUT
6	X160 20GY/YL	FUSED B(+)
7	E14 22OR/TN	PANEL LAMPS DRIVER
8	-	-
9	Z141 20BK/TN	GROUND
10	X703 22DG/WT	LEFT AUDIO OUTPUT

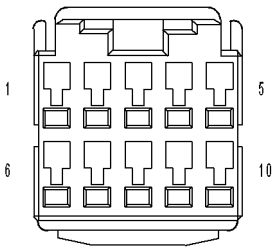

HANDS FREE MODULE C3

HANDS FREE MODULE C3 - 10 WAY

CAV	CIRCUIT	FUNCTION
1	X40 22GY/WT	AUDIO OUT RIGHT
2	X140 22GY/OR	COMMON AUDIO
3	X235 20GY/LB (CD CHANGER)	SHIELD
3	X955 22 (DVD/CD CHANGER)	SHIELD
4	D25 20WT/VT	PCI BUS
5	X112 20DG/GY	IGNITION SWITCH SIGNAL
6	X41 22DG/WT	AUDIO OUT LEFT
7	Z141 20BK/TN (CD CHANGER)	GROUND
8	-	-
9	E14 22OR/TN	PANEL LAMPS DRIVER
10	X160 20GY/YL (CD CHANGER)	FUSED B(+)

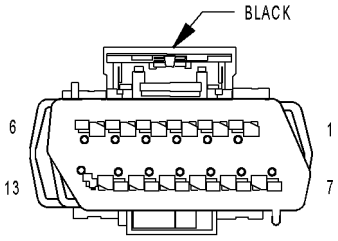

HEADLAMP SWITCH

HEADLAMP SWITCH - BLACK 13 WAY

CAV	CIRCUIT	FUNCTION
1	Z403 20BK/YL (EXPORT)	GROUND
2	L78 20WT/OR (EXPORT)	FUSED PARK LAMP RELAY OUTPUT (RIGHT)
3	-	-
4	Z407 22BK/OR	GROUND
5	L36 20WT/DB (EXPORT)	REAR FOG LAMP INDICATOR DRIVER
6	L900 22WT/YL	HEADLAMP SWITCH RETURN
7	L13 20WT/YL (EXPORT)	HEADLAMP ADJUST SIGNAL
8	E19 20OR/BR (AUTOMATIC HEAD-LAMPS)	HEADLAMP SWITCH DIMMER SIGNAL
9	-	-
10	L39 22WT/OR (HIGHLINE)	FRONT FOG LAMP INDICATOR DRIVER
11	L307 20WT/BR	HEADLAMP SWITCH MUX
12	E2 22OR/BR	PANEL LAMPS DIMMER SIGNAL
13	-	-

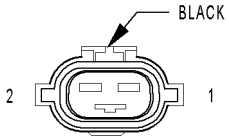

HEADLAMP WASHER PUMP MOTOR (EXPORT)

HEADLAMP WASHER PUMP MOTOR (EXPORT) - BLACK 2 WAY

CAV	CIRCUIT	FUNCTION
1	V53 12BR/OR	HEADLAMP WASHER RELAY OUTPUT
2	Z243 12BK/OR	GROUND

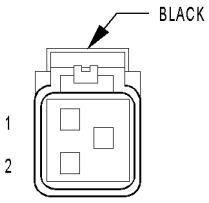

HIGH NOTE HORN

HIGH NOTE HORN - BLACK 2 WAY

CAV	CIRCUIT	FUNCTION
1	Z299 20BK/OR	GROUND
2	X2 18DG/OR	HORN RELAY OUTPUT

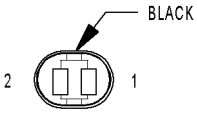

HOOD AJAR SWITCH (EXPORT)

HOOD AJAR SWITCH (EXPORT) - BLACK 2 WAY

CAV	CIRCUIT	FUNCTION
1	G70 22VT/LB	HOOD AJAR SWITCH SENSE
2	Z470 22BK/LB	GROUND

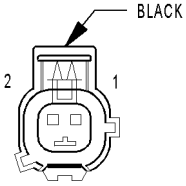

IDLE AIR CONTROL MOTOR (GAS)

IDLE AIR CONTROL MOTOR (GAS) - BLACK 2 WAY

CAV	CIRCUIT	FUNCTION
1	K61 18VT/GY	IAC MOTOR CONTROL
2	K961 18BR/VT	IAC RETURN

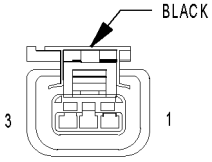

IGNITION COIL (2.4L)

IGNITION COIL (2.4L) - BLACK 3 WAY

CAV	CIRCUIT	FUNCTION
1	K17 16DB/TN	COIL CONTROL NO. 2
2	K342 16BR/WT	ASD RELAY OUTPUT
3	K19 16DB/DG	COIL CONTROL NO. 1

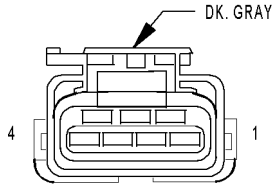

IGNITION COIL (3.3L/3.8L)

IGNITION COIL (3.3L/3.8L) - DK. GRAY 4 WAY

CAV	CIRCUIT	FUNCTION
1	K18 16BR/OR	COIL CONTROL NO. 3
2	K342 16BR/WT	ASD RELAY OUTPUT
3	K19 16DB/DG	COIL CONTROL NO. 1
4	K17 16DB/TN	COIL CONTROL NO. 2

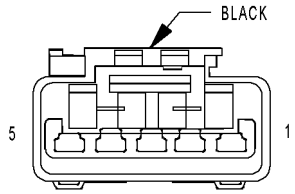

IGNITION SWITCH

IGNITION SWITCH - BLACK 5 WAY

CAV	CIRCUIT	FUNCTION
1	G900 20VT/DB	IGNITION SWITCH SENSE RETURN
2	G20 20VT/BR	IGNITION SWITCH SENSE
3	F20 20PK/WT	FUSED IGNITION SWITCH OUTPUT (RUN-START)
3	F20 20PK/WT (LHD)	FUSED IGNITION SWITCH OUTPUT (RUN-START)
4	T751 20YL	FUSED IGNITION SWITCH OUTPUT (START)
5	A106 20LB/RD	FUSED B(+)

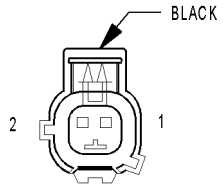

INLET AIR TEMPERATURE SENSOR

INLET AIR TEMPERATURE SENSOR - BLACK 2 WAY

CAV	CIRCUIT	FUNCTION
1	K21 18DB/LG	IAT SIGNAL
2	K900 20DB/DG	SENSOR GROUND

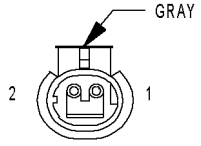

INPUT SPEED SENSOR

INPUT SPEED SENSOR - GRAY 2 WAY

CAV	CIRCUIT	FUNCTION
1	T13 18DG/VT	SPEED SENSOR GROUND
2	T52 18DG/WT	INPUT SPEED SENSOR SIGNAL

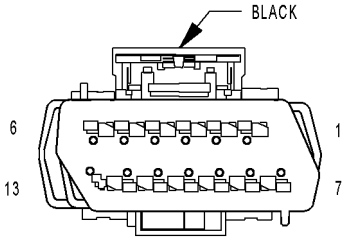

INSTRUMENT CLUSTER

INSTRUMENT CLUSTER - BLACK 13 WAY

CAV	CIRCUIT	FUNCTION
1	E13 20OR/WT	PANEL LAMPS DRIVER
2	L160 20WT/TN (EXCEPT EXPORT)	RIGHT TURN INDICATOR DRIVER
3	G7 20VT/GY (EXPORT)	LOW OIL PRESSURE INDICATOR DRIVER
4	G3 20VT/LB (EXPORT)	MALFUNCTION INDICATOR LAMP DRIVER
5	L134 20WT/GY (EXPORT)	HIGH BEAM INDICATOR DRIVER
6	A701 18BR/RD	FUSED B(+) (HAZARD)
7	Z108 18BK/LG	GROUND
8	G700 20VT/YL (DIESEL)	SUPPLEMENTAL HEAT INDICATOR SENSE
8	L161 20WT/LG (EXCEPT EXPORT)	LEFT TURN INDICATOR DRIVER
9	D25 20WT/VT	PCI BUS
10	B25 16DG/WT (EXCEPT EXPORT)	PARK BRAKE SWITCH SENSE
10	B25 18DG/WT (LHD EXPORT)	PARK BRAKE SWITCH SENSE
10	B25 20DG/WT (RHD)	PARK BRAKE SWITCH SENSE
11	G26 22VT/OR	CHIME DRIVER
12	G150 22VT/BR	INSTRUMENT CLUSTER WAKE UP SENSE
13	Z18 18BK/LB	GROUND

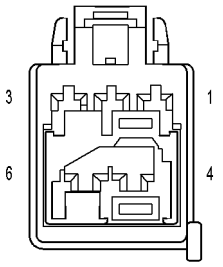

INSTRUMENT PANEL SWITCH BANK (EXCEPT HEATED SEATS)

INSTRUMENT PANEL SWITCH BANK (EXCEPT HEATED SEATS) - 6 WAY

CAV	CIRCUIT	FUNCTION
1	E14 20OR/TN	PANEL LAMPS DRIVER
2	G104 20VT/GY (OCCUPANT SENSING)	PASSENGER AIRBAG ON/OFF INDICATOR LAMP GROUND
3	F201 20PK/OR	ORC RUN-START DRIVER
4	L91 22WT/DB	HAZARD SWITCH SENSE
5	-	-
6	Z406 20BK/BR	GROUND

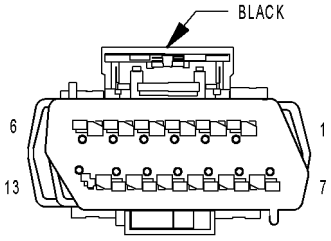

INSTRUMENT PANEL SWITCH BANK (HEATED SEATS)

INSTRUMENT PANEL SWITCH BANK (HEATED SEATS) - BLACK 13 WAY

CAV	CIRCUIT	FUNCTION
1	-	-
2	-	-
3	F201 20PK/OR (EXCEPT EXPORT)	ORC RUN-START DRIVER
3	P8 22LG/WT (LHD EXPORT)	PASSENGER HEATED SEAT SWITCH MUX
3	P7 20LG/DG (RHD)	DRIVER HEATED SEAT SWITCH MUX
4	F504 20GY/PK	FUSED IGNITION SWITCH OUTPUT (RUN)
5	P7 20LG/DG (LHD)	DRIVER HEATED SEAT SWITCH MUX
5	P8 22LG/WT (RHD)	PASSENGER HEATED SEAT SWITCH MUX
6	-	-
7	-	-
8	L91 22WT/DB (LHD)	HAZARD SWITCH SENSE
8	L91 20WT/DB (RHD)	HAZARD SWITCH SENSE
9	W26 22BR/DB	REAR WIPER SWITCH MUX
10	Z406 20BK/BR	GROUND
11	G926 22VT/WT	REAR WIPER SWITCH MUX RETURN
12	E14 20OR/TN	PANEL LAMPS DRIVER
13	-	-

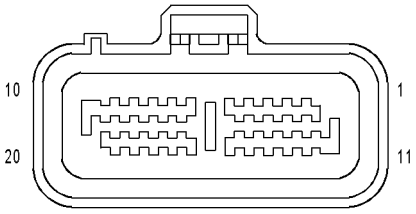

INTEGRATED POWER MODULE C1

INTEGRATED POWER MODULE C1 - 20 WAY

CAV	CIRCUIT	FUNCTION
1	-	-
2	-	-
3	-	-
4	L43 18WT/DB	LEFT LOW BEAM DRIVER
5	Z344 16BK/TN	GROUND
6	L34 16WT/GY	RIGHT HIGH BEAM DRIVER
7	W1 18BR/TN	WASHER FLUID LEVEL SWITCH SENSE
8	L33 18WT/LG	LEFT HIGH BEAM DRIVER
9	G31 18VT/LG (DIESEL)	AMBIENT TEMPERATURE SENSOR SIGNAL
10	L44 16WT/TN	RIGHT LOW BEAM DRIVER
11	-	-
12	-	-
13	Z343 18BK/LG	GROUND
14	-	-
15	L78 18WT/OR	FUSED PARK LAMP RELAY OUTPUT (RIGHT)
16	L77 18WT/BR	FUSED PARK LAMP RELAY OUTPUT (LEFT)
17	-	-
18	G931 18VT/BR (DIESEL)	AMBIENT TEMPERATURE SENSOR RETURN
19	W20 18BR/YL	REAR WASHER PUMP MOTOR CONTROL
20	W10 18BR	FRONT WASHER PUMP MOTOR CONTROL

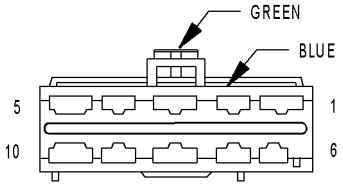

INTEGRATED POWER MODULE C2

INTEGRATED POWER MODULE C2 - GREEN/BLUE 10 WAY

CAV	CIRCUIT	FUNCTION
1	N173 18DB/VT (GAS)	RAD FAN RELAY CONTROL
2	V53 12BR/OR (EXPORT)	HEADLAMP WASHER RELAY OUTPUT
3	L60 18WT/TN	RIGHT FRONT TURN SIGNAL DRIVER
4	L13 18WT/YL (EXPORT)	HEADLAMP ADJUST SIGNAL
5	X2 18DG/OR	HORN RELAY OUTPUT
6	L90 18WT/OR (FOG LAMPS)	FRONT FOG LAMP RELAY OUTPUT
7	L61 18WT/LB	LEFT FRONT TURN SIGNAL DRIVER
8	-	-
9	A112 12OR/RD	FUSED B(+)
10	L89 18WT/YL (FOG LAMPS)	FRONT FOG LAMP RELAY OUTPUT

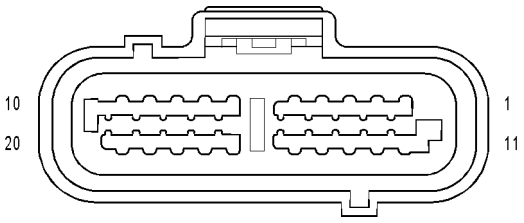

INTEGRATED POWER MODULE C3

INTEGRATED POWER MODULE C3 - 20 WAY

CAV	CIRCUIT	FUNCTION
1	N21 20DB/TN (DIESEL)	LIFT PUMP RELAY CONTROL
1	Z115 20BK/OR (GAS)	GROUND
2	F1 18PK/WT	FCM OUTPUT (UNLOCK-RUN-START)
3	T751 20YL (DIESEL)	FUSED IGNITION SWITCH OUTPUT (START)
3	T751 18YL (GAS)	FUSED IGNITION SWITCH OUTPUT (START)
4	T2 18DG/WT (MTX)	TRS REVERSE SENSE
5	N2 18DB/YL (DIESEL)	LIFT PUMP RELAY OUTPUT
5	T16 18YL/OR (GAS EATX)	TRANSMISSION CONTROL RELAY OUTPUT
6	F202 20PK/GY (DIESEL)	FUSED IGNITION SWITCH OUTPUT (RUN-START)
6	T15 18YL/BR (GAS EATX)	TRANSMISSION CONTROL RELAY CONTROL
7	C3 20DB/YL	A/C CLUTCH RELAY OUTPUT
8	Z114 18BK/LG (DIESEL)	GROUND
8	K31 18BR (GAS)	FUEL PUMP RELAY CONTROL
9	C13 20LB/OR (DIESEL)	A/C COMPRESSOR CLUTCH RELAY CONTROL
9	C13 18LB/OR (GAS)	A/C COMPRESSOR CLUTCH RELAY CONTROL
10	A119 16RD/OR (DIESEL)	FUSED B(+)
11	C41 20LB/DG (DIESEL)	CABIN HEATER ASSIST CONTROL
12	-	-
13	D25 20WT/VT (DIESEL MTX)	PCI BUS
13	D25 18WT/VT (GAS/DIESEL EATX)	PCI BUS
14	T752 20DG/OR (DIESEL)	STARTER MOTOR RELAY CONTROL
14	T752 18DG/OR (GAS)	STARTER RELAY CONTROL
15	Z116 18BK/VT	GROUND
16	K51 20BR/WT (DIESEL)	ECM/PCM RELAY CONTROL
16	K51 18BR/WT (GAS)	ASD RELAY CONTROL
17	F202 20PK/GY	FUSED IGNITION SWITCH OUTPUT (RUN-START)
18	K173 18BR/VT (GAS)	RAD FAN RELAY CONTROL
19	K342 16BR/WT (DIESEL)	ECM/PCM RELAY OUTPUT
19	F202 20PK/GY (GAS)	FUSED IGNITION SWITCH OUTPUT (RUN-START)
20	A109 18OR/RD (GAS)	FUSED B(+)

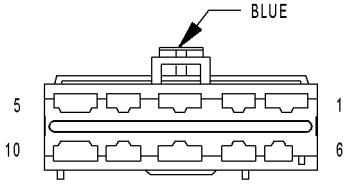

INTEGRATED POWER MODULE C4

INTEGRATED POWER MODULE C4 - BLUE 10 WAY

CAV	CIRCUIT	FUNCTION
1	Z127 12BK (ASSY. PLANT EVAC & FILL)	GROUND
2	T750 12YL/GY	STARTER MOTOR RELAY OUTPUT
3	K342 16BR/WT (DIESEL)	ECM/PCM RELAY OUTPUT
3	K342 16BR/WT (GAS)	ASD RELAY OUTPUT
4	F500 16DG/PK (ASSY. PLANT EVAC & FILL)	FUSED IGNITION SWITCH OUTPUT (RUN)
5	-	-
6	D25 18WT/VT (ABS)	PCI BUS
7	A107 12TN/RD (ABS)	FUSED B(+)
8	A111 12DG/RD (ABS)	FUSED B(+)
9	-	-
10	-	-

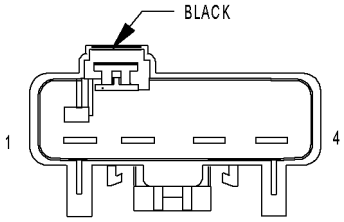

INTEGRATED POWER MODULE C5

INTEGRATED POWER MODULE C5 - BLACK 4 WAY

CAV	CIRCUIT	FUNCTION
1	A1 4RD	B(+)
2	-	-
3	-	-
4	-	-

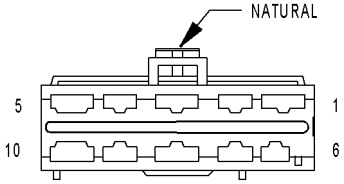

INTEGRATED POWER MODULE C6

INTEGRATED POWER MODULE C6 - NATURAL 10 WAY

CAV	CIRCUIT	FUNCTION
1	A101 12VT/RD	FUSED B(+)
2	Z117 16BK/WT	GROUND
3	Z118 16BK/WT (LWB/EXPORT)	GROUND
3	Z118 16BK/YL (SWB/EXCEPT EXPORT)	GROUND
4	A110 12OR/RD (POWER SEAT)	FUSED B(+)
5	-	-
6	-	-
7	C7 12DB	FUSED FRONT BLOWER MOTOR RELAY OUTPUT
8	F307 18LB/PK (ACCESSORY RELAY POSITION)	FUSED ACCESSORY RELAY OUTPUT
8	F307 18LB/PK (BATTERY POSITION)	FUSED B(+)
9	A113 12WT/RD (POWER SLIDING DOOR)	FUSED B(+)
10	-	-

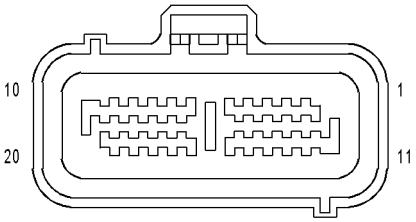

INTEGRATED POWER MODULE C7

INTEGRATED POWER MODULE C7 - 20 WAY

CAV	CIRCUIT	FUNCTION
1	C16 20DB/GY	FUSED DEFOGGER RELAY OUTPUT
2	T141 20YL/OR (DIESEL)	FUSED IGNITION SWITCH OUTPUT (START)
2	T751 20YL (GAS)	FUSED IGNITION SWITCH OUTPUT (START)
3	D25 20WT/VT	PCI BUS
4	L13 20WT/YL (EXPORT)	HEADLAMP ADJUST SIGNAL
5	K32 18DB/YL	BRAKE TRANSMISSION SHIFT INTERLOCK SOLENOID CONTROL
6	-	-
7	W7 20BR/GY	WIPER PARK SWITCH SENSE
8	B20 20DG/OR	BRAKE FLUID LEVEL SWITCH SENSE
9	F201 20PK/OR	ORC RUN-START DRIVER
10	-	-
11	A106 20LB/RD	FUSED B(+)
12	P201 20LG/DB (EXCEPT EXPORT/EX-CEPT MEMORY)	ADJUSTABLE PEDALS RELAY CONTROL
13	F2 18PK/YL	FCM OUTPUT (UNLOCK-RUN-START)
14	-	-
15	A114 16GY/RD	FUSED B(+) (I.O.D.)
16	D123 20WT/BR	FLASH PROGRAM ENABLE
17	L50 18WT/TN (DIESEL)	PRIMARY BRAKE SWITCH SIGNAL
17	L50 18WT/TN (GAS)	BRAKE LAMP SWITCH OUTPUT
18	-	-
19	X3 20DG/VT	HORN SWITCH SENSE
20	F100 18PK/VT	ORC RUN ONLY DRIVER

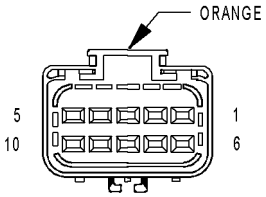

INTEGRATED POWER MODULE C8

INTEGRATED POWER MODULE C8 - ORANGE 10 WAY

CAV	CIRCUIT	FUNCTION
1	W3 14BR/WT	FRONT WIPER HIGH/LOW RELAY LOW SPEED OUTPUT
2	N1 16DB/OR (DIESEL)	FUEL HEATER RELAY OUTPUT
2	N1 18DB/OR (GAS)	FUEL PUMP RELAY OUTPUT
3	A108 18LG/RD (EXCEPT EXPORT)	FUSED B(+)
3	A108 20LG/RD (EXPORT)	FUSED B(+)
3	A108 20LG/RD (EXPORT)	FUSED B(+)
4	A103 18GY/RD	FUSED B(+)
5	L77 18WT/BR	FUSED PARK LAMP RELAY OUTPUT (LEFT)
6	W4 14BR/OR	FRONT WIPER HIGH/LOW RELAY HIGH SPEED OUTPUT
7	C51 12LB/BR (3 ZONE HVAC)	FUSED REAR BLOWER MOTOR RELAY OUTPUT
8	-	-
9	L78 18WT/OR	FUSED PARK LAMP RELAY OUTPUT (RIGHT)
10	L60 18WT/TN	RIGHT FRONT TURN SIGNAL DRIVER

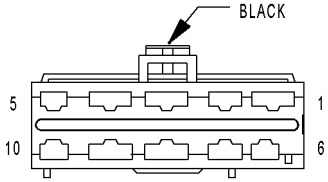

INTEGRATED POWER MODULE C9

INTEGRATED POWER MODULE C9 - BLACK 10 WAY

CAV	CIRCUIT	FUNCTION
1	A116 14YL/RD (HIGHLINE AUDIO)	FUSED B(+)
2	F20 18PK/WT	FUSED IGNITION SWITCH OUTPUT (RUN-START)
3	C15 12DB/WT	FUSED DEFOGGER RELAY OUTPUT
4	A105 18DB/RD	FUSED B(+)
5	L61 20WT/LB	LEFT FRONT TURN SIGNAL DIVER
6	A701 18BR/RD	FUSED B(+) (HAZARD)
6	A701 16BR/RD	FUSED B(+) (HAZARD)
7	F306 16DB/PK	FUSED ACCESSORY RELAY OUTPUT
8	F30 12PK/YL (POWER WINDOWS)	FUSED ACCESSORY RELAY OUTPUT
9	A115 12YL/RD	FUSED B(+)
10	F302 18GY/PK	FUSED ACCESSORY RELAY OUTPUT

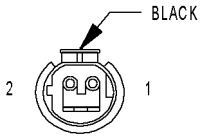

KNOCK SENSOR (EXCEPT EXPORT)

KNOCK SENSOR (EXCEPT EXPORT) - BLACK 2 WAY

CAV	CIRCUIT	FUNCTION
1	K42 18DB/YL	KS SIGNAL
2	K942 18BR/LG	KS RETURN

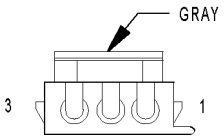

LEFT B-PILLAR SWITCH (POWER SLIDING DOOR)

LEFT B-PILLAR SWITCH (POWER SLIDING DOOR) - GRAY 3 WAY

CAV	CIRCUIT	FUNCTION
1	Z61 22BK/DG	GROUND
2	-	-
3	G41 22VT/DG	LEFT SLIDING DOOR PILLAR SWITCH MUX

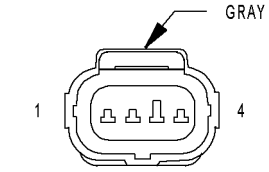

LEFT CINCH/ RELEASE MOTOR (POWER SLIDING DOOR)

LEFT CINCH/RELEASE MOTOR (POWER SLIDING DOOR) - GRAY 4 WAY

CAV	CIRCUIT	FUNCTION
1	Q49 18TN/WT	LEFT CINCH/RELEASE MOTOR UNLATCH DRIVER
2	Z249 18BK/WT	GROUND
3	Q45 18OR/GY	LEFT CINCH/RELEASE MOTOR CLUTCH DRIVER
4	Q47 18TN/GY	LEFT CINCH/RELEASE MOTOR LATCH DRIVER

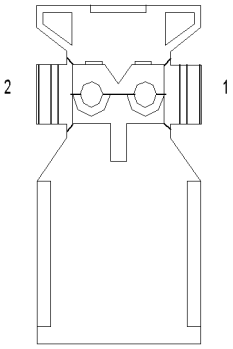

LEFT CURTAIN AIRBAG SQUIB

LEFT CURTAIN AIRBAG SQUIB - 2 WAY

CAV	CIRCUIT	FUNCTION
1	R1 20LB/WT	LEFT CURTAIN SQUIB LINE 2
2	R3 20LB/OR	LEFT CURTAIN SQUIB LINE 1

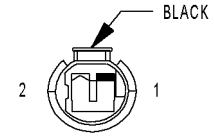

LEFT CYLINDER LOCK SWITCH (EXPORT)

LEFT CYLINDER LOCK SWITCH (EXPORT) - BLACK 2 WAY

CAV	CIRCUIT	FUNCTION
1	Z463 20BK/LB	GROUND
2	G163 20VT/LB	LEFT CYLINDER LOCK SWITCH MUX

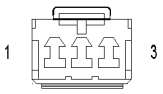

LEFT DOOR SPEAKER

LEFT DOOR SPEAKER - 3 WAY

CAV	CIRCUIT	FUNCTION
1	X291 18DG/BR (HIGHLINE)	AMPLIFIED LEFT FRONT SPEAKER (-)
1	X55 20DG/BR (LOWLINE)	LEFT FRONT SPEAKER (-)
2	-	-
3	X201 18DG (HIGHLINE)	AMPLIFIED LEFT FRONT SPEAKER (+)
3	X53 20DG (LOWLINE)	LEFT FRONT SPEAKER (+)

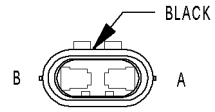

LEFT FOG LAMP

LEFT FOG LAMP - BLACK 2 WAY

CAV	CIRCUIT	FUNCTION
A	L89 18WT/YL	FRONT FOG LAMP RELAY OUTPUT
B	Z349 18BK/YL	GROUND

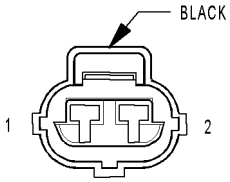

LEFT FRONT DOOR AJAR SWITCH (BASE)

LEFT FRONT DOOR AJAR SWITCH (BASE) - BLACK 2 WAY

CAV	CIRCUIT	FUNCTION
1	G75 20VT	LEFT FRONT DOOR AJAR SWITCH SENSE
2	Z75 20BK/VT	GROUND

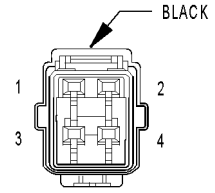

LEFT FRONT DOOR LOCK MOTOR/AJAR SWITCH (EXCEPT BASE)

LEFT FRONT DOOR LOCK MOTOR/AJAR SWITCH (EXCEPT BASE) - BLACK 4 WAY

CAV	CIRCUIT	FUNCTION
1	G75 20VT	LEFT FRONT DOOR AJAR SWITCH SENSE
2	Z75 20BK/VT	GROUND
3	P1 20TN/LG	LEFT FRONT DOOR UNLOCK DRIVER
4	P3 20TN/WT	LEFT FRONT DOOR LOCK DRIVER

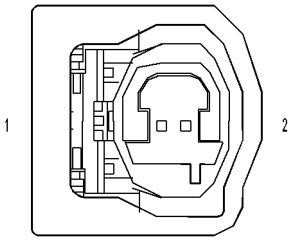

LEFT FRONT IMPACT SENSOR (EXCEPT EXPORT)

LEFT FRONT IMPACT SENSOR (EXCEPT EXPORT) - 2 WAY

CAV	CIRCUIT	FUNCTION
1	R81 20LB/WT	LEFT FRONT IMPACT SENSOR GROUND
2	R79 20LB/VT	LEFT FRONT IMPACT SENSOR SIGNAL

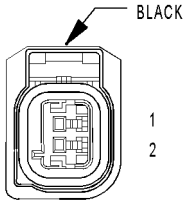

LEFT FRONT IMPACT SENSOR (EXPORT)

LEFT FRONT IMPACT SENSOR (EXPORT) - BLACK 2 WAY

CAV	CIRCUIT	FUNCTION
1	R81 20LB/WT	LEFT FRONT IMPACT SENSOR GROUND
2	R79 20LB/VT	LEFT FRONT IMPACT SENSOR SIGNAL

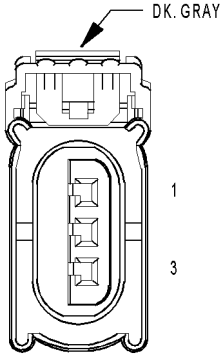

LEFT FRONT PARK/TURN SIGNAL LAMP

LEFT FRONT PARK/TURN SIGNAL LAMP - DK. GRAY 3 WAY

CAV	CIRCUIT	FUNCTION
1	L61 18WT/LB	LEFT FRONT TURN SIGNAL DRIVER
2	L77 18WT/BR	FUSED PARK LAMP RELAY OUTPUT (LEFT)
3	Z377 18BK/BR	GROUND

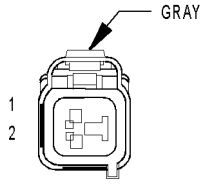

LEFT FRONT WHEEL SPEED SENSOR

LEFT FRONT WHEEL SPEED SENSOR - GRAY 2 WAY

CAV	CIRCUIT	FUNCTION
1	B9 18DG/WT (3.3L/3.8L)	LEFT FRONT WHEEL SPEED SENSOR 12 VOLT SUPPLY
1	B9 18DG/LG (EXCEPT 3.3L/3.8L)	LEFT FRONT WHEEL SPEED SENSOR 12 VOLT SUPPLY
2	B8 18DG/TN	LEFT FRONT WHEEL SPEED SENSOR SIGNAL

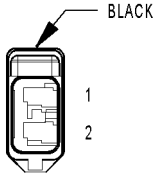

LEFT FULL OPEN SWITCH (POWER SLIDING DOOR)

LEFT FULL OPEN SWITCH (POWER SLIDING DOOR) - BLACK 2 WAY

CAV	CIRCUIT	FUNCTION
1	Q53 20OR	LEFT FULL OPEN SWITCH SENSE
2	Z77 20BK/GY	GROUND

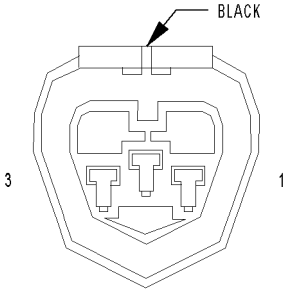

LEFT HEADLAMP (CARAVAN/VOYAGER EXCEPT EXPORT)

LEFT HEADLAMP (CARAVAN/VOYAGER EXCEPT EXPORT) - BLACK 3 WAY

CAV	CIRCUIT	FUNCTION
1	L43 18WT/DB	LEFT LOW BEAM DRIVER
2	Z343 18BK/LG	GROUND
3	L33 18WT/LG	LEFT HIGH BEAM DRIVER

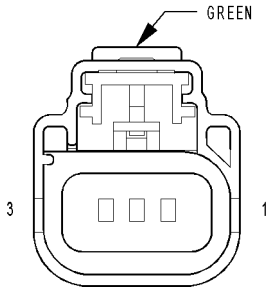

LEFT HEADLAMP (TOWN AND COUNTRY)

LEFT HEADLAMP (TOWN AND COUNTRY) - GREEN 3 WAY

CAV	CIRCUIT	FUNCTION
1	L43 18WT/DB	LEFT LOW BEAM DRIVER
2	Z343 18BK/LG	GROUND
3	L33 18WT/LG	LEFT HIGH BEAM DRIVER

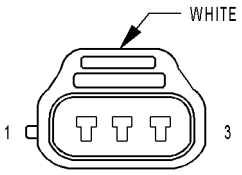

LEFT HEADLAMP LEVELING MOTOR (EXPORT)

LEFT HEADLAMP LEVELING MOTOR (EXPORT) - WHITE 3 WAY

CAV	CIRCUIT	FUNCTION
1	Z203 16BR	GROUND
2	L77 16BK	FUSED PARK LAMP RELAY OUTPUT (LEFT)
3	L13 16RD	HEADLAMP ADJUST SIGNAL

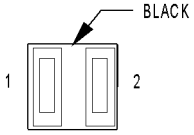

LEFT HIGH BEAM LAMP (EXPORT)

LEFT HIGH BEAM LAMP (EXPORT) - BLACK 2 WAY

CAV	CIRCUIT	FUNCTION
1	Z343 16BR	GROUND
1	Z343 16BR	GROUND
2	L33 16GY	LEFT HIGH BEAM DRIVER

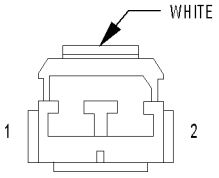

LEFT INSTRUMENT PANEL SPEAKER

LEFT INSTRUMENT PANEL SPEAKER - WHITE 2 WAY

CAV	CIRCUIT	FUNCTION
1	X153 18DG/YL (HIGHLINE EXCEPT EXPORT)	LEFT INSTRUMENT PANEL SPEAKER (+)
1	X153 20DG/YL (HIGHLINE EXPORT/ LOWLINE)	LEFT INSTRUMENT PANEL SPEAKER (+)
2	X155 18DG/LB (HIGHLINE EXCEPT EXPORT)	LEFT INSTRUMENT PANEL SPEAKER (+)
2	X155 20DG/LB (HIGHLINE EXPORT/ LOWLINE)	LEFT INSTRUMENT PANEL SPEAKER (-)

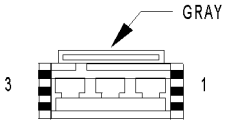

LEFT LIFTGATE FLOOD LAMP (EXPORT)

LEFT LIFTGATE FLOOD LAMP (EXPORT) - GRAY 3 WAY

CAV	CIRCUIT	FUNCTION
1	Z311 20BK/VT	GROUND
1	Z312 20BK/YL	GROUND
2	-	-
3	M11 20YL/VT	COURTESY LAMPS DRIVER
3	M11 20YL/VT (EXCEPT POWER LIFT-GATE)	COURTESY LAMPS DRIVER EXPORT

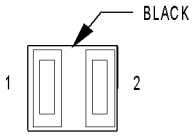

LEFT LOW BEAM LAMP (EXPORT)

LEFT LOW BEAM LAMP (EXPORT) - BLACK 2 WAY

CAV	CIRCUIT	FUNCTION
1	Z343 16BR	GROUND
2	L43 16WT	LEFT LOW BEAM DRIVER

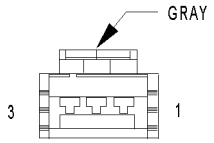

LEFT MID READING LAMP (PREMIUM/LUXURY)

LEFT MID READING LAMP (PREMIUM/LUXURY) - GRAY 3 WAY

CAV	CIRCUIT	FUNCTION
1	M22 20YL/OR	COURTESY LAMPS DRIVER
2	Z327 20BK/OR	GROUND
3	M27 20YL/LB	READING LAMPS DRIVER

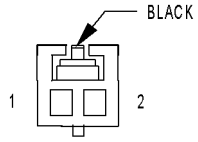

LEFT PARK LAMP (EXPORT)

LEFT PARK LAMP (EXPORT) - BLACK 2 WAY

CAV	CIRCUIT	FUNCTION
1	Z343 16BR	GROUND
2	L77 16BK	FUSED PARK LAMP RELAY OUTPUT (LEFT)

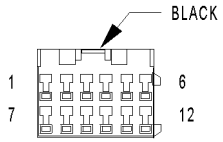

LEFT POWER MIRROR

LEFT POWER MIRROR - BLACK 12 WAY

CAV	CIRCUIT	FUNCTION
1	P171 20TN/YL (EXPORT)	LEFT FOLDING MIRROR UNFOLD DRIVER
2	P112 22TN/OR (AUTOMATIC DAY/ NIGHT MIRROR)	MIRROR B(+)
3	P114 22TN/WT (AUTOMATIC DAY/ NIGHT MIRROR)	MIRROR B(-)
4	P65 20TN/VT (MEMORY)	LEFT MIRROR HORIZONTAL POSITION SIGNAL
5	P69 20TN/WT (MEMORY)	LEFT MIRROR SENSOR GROUND
6	P64 20TN (MEMORY)	LEFT MIRROR VERTICAL POSITION SIGNAL
7	P159 20TN/DG (LHD EXPORT)	DRIVER FOLDING MIRROR FOLD DRIVER
7	P160 20TN/LG (RHD EXPORT)	PASSENGER FOLDING MIRROR RELAY OUTPUT
8	Z215 22BK/LG	GROUND
9	C16 20DB/GY (HEATED MIRRORS)	FUSED DEFOGGER RELAY OUTPUT
10	P73 20TN/YL	LEFT MIRROR COMMON DRIVER (RIGHT/DOWN)
11	P71 20TN/DG	LEFT MIRROR UP DRIVER
12	P75 20TN/LG	LEFT MIRROR LEFT DRIVER

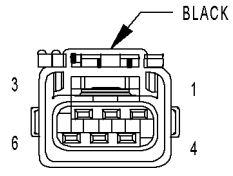

LEFT REAR LAMP ASSEMBLY

LEFT REAR LAMP ASSEMBLY - BLACK 6 WAY

CAV	CIRCUIT	FUNCTION
1	L63 18WT/DG (EXCEPT EXPORT)	LEFT REAR TURN SIGNAL DRIVER
1	Z363 18BK/DG (EXPORT)	GROUND
2	L63 18WT/DG (EXPORT)	LEFT REAR TURN SIGNAL DRIVER
3	L50 18WT/TN (DIESEL EXPORT)	PRIMARY BRAKE SWITCH SIGNAL
3	L77 18WT/BR (EXCEPT EXPORT)	FUSED PARK LAMP RELAY OUTPUT (LEFT)
3	L50 18WT/TN (GAS EXPORT)	BRAKE LAMP SWITCH OUTPUT
4	L1 18WT/LG (EXCEPT TRAILER TOW)	BACK-UP LAMP FEED
4	L1 18WT/BR (TRAILER TOW)	BACK-UP LAMP FEED
5	Z363 18BK/DG (EXCEPT EXPORT)	GROUND
5	L38 20WT/YL (EXPORT)	REAR FOG LAMP SWITCH OUTPUT
6	L77 18WT/BR (EXPORT)	FUSED PARK LAMP RELAY OUTPUT (LEFT)

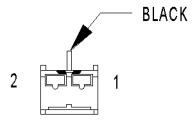

LEFT REAR PILLAR SPEAKER (HIGHLINE AUDIO)

LEFT REAR PILLAR SPEAKER (HIGHLINE AUDIO) - BLACK 2 WAY

CAV	CIRCUIT	FUNCTION
1	X214 18DG/DB (EXCEPT EXPORT)	AMPLIFIED LEFT REAR TWEETER (-)
1	X214 20DG/DB (EXPORT)	AMPLIFIED LEFT REAR TWEETER (-)
2	X284 18DG/TN (EXCEPT EXPORT)	AMPLIFIED LEFT REAR TWEETER (+)
2	X284 20DG/TN (EXPORT)	AMPLIFIED LEFT REAR TWEETER (+)

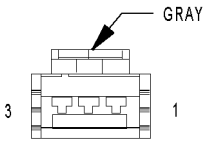

LEFT REAR READING LAMP (LUXURY)

LEFT REAR READING LAMP (LUXURY) - GRAY 3 WAY

CAV	CIRCUIT	FUNCTION
1	M22 20YL/OR	COURTESY LAMPS DRIVER
2	Z327 20BK/OR	GROUND
3	M27 20YL/LB	READING LAMPS DRIVER

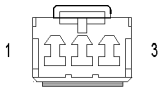

LEFT REAR SPEAKER

LEFT REAR SPEAKER - 3 WAY

CAV	CIRCUIT	FUNCTION
1	X295 18GY/DG (HIGHLINE EXCEPT EXPORT)	AMPLIFIED LEFT REAR SPEAKER (-)
1	X295 20GY/DG (HIGHLINE EXPORT)	AMPLIFIED LEFT REAR SPEAKER (-)
1	X57 20DG/OR (LOWLINE)	LEFT REAR SPEAKER (-)
2	-	-
3	X205 18GY/LG (HIGHLINE EXCEPT EXPORT)	AMPLIFIED LEFT REAR SPEAKER (+)
3	X205 20GY/LG (HIGHLINE EXPORT)	AMPLIFIED LEFT REAR SPEAKER (+)
3	X51 20DG/DB (LOWLINE)	LEFT REAR SPEAKER (+)

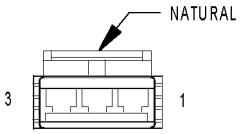

LEFT REAR VENT MOTOR

LEFT REAR VENT MOTOR - NATURAL 3 WAY

CAV	CIRCUIT	FUNCTION
1	Q13 16OR/DB (LHD)	DRIVER SIDE REAR WINDOW CLOSE
1	Q14 16OR/BR (RHD)	PASSENGER SIDE REAR WINDOW CLOSE
2	Q23 16OR/LB (LHD)	DRIVER SIDE REAR WINDOW OPEN
2	Q24 16OR/DG (RHD)	PASSENGER SIDE REAR WINDOW OPEN
3	-	-

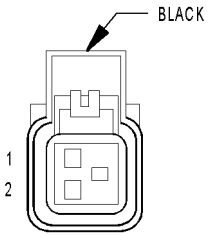

LEFT REAR WHEEL SPEED SENSOR

LEFT REAR WHEEL SPEED SENSOR - BLACK 2 WAY

CAV	CIRCUIT	FUNCTION
1	B4 18DG/GY	LEFT REAR WHEEL SPEED SENSOR 12 VOLT SUPPLY
2	B3 18DG/YL	LEFT REAR WHEEL SPEED SENSOR SIGNAL

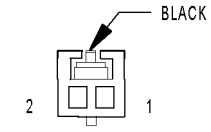

LEFT REMOTE RADIO SWITCH

LEFT REMOTE RADIO SWITCH - BLACK 2 WAY

CAV	CIRCUIT	FUNCTION
1	X10 22RD/DB	RADIO CONTROL MUX
2	X20 22RD/BK	RADIO CONTROL MUX RETURN

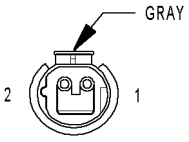

LEFT REPEATER LAMP (EXPORT)

LEFT REPEATER LAMP (EXPORT) - GRAY 2 WAY

CAV	CIRCUIT	FUNCTION
1	A701 18BR/RD	FUSED B(+)
2	L163 20WT/BR	LEFT SIDE REPEATER LAMP FEED

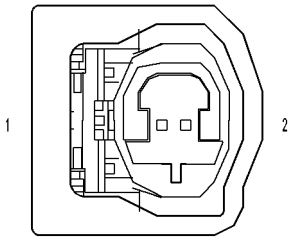

LEFT SIDE IMPACT SENSOR 1 (EXCEPT EXPORT)

LEFT SIDE IMPACT SENSOR 1 (EXCEPT EXPORT) - 2 WAY

CAV	CIRCUIT	FUNCTION
1	R15 20DB	LEFT SIDE IMPACT SENSOR 1 GROUND
2	R13 20LB	LEFT SIDE IMPACT SENSOR 1 SIGNAL

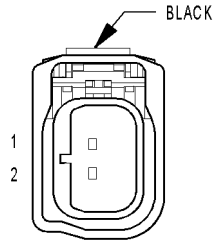

LEFT SIDE IMPACT SENSOR 1 (EXPORT)

LEFT SIDE IMPACT SENSOR 1 (EXPORT) - BLACK 2 WAY

CAV	CIRCUIT	FUNCTION
1	R15 20DB (EXCEPT RHD LWB)	LEFT SIDE IMPACT SENSOR 1 GROUND
1	R15 20LB (RHD LWB)	LEFT SIDE IMPACT SENSOR 1 GROUND
2	R13 20LB	LEFT SIDE IMPACT SENSOR 1 SIGNAL

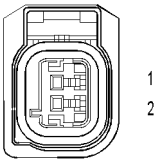

LEFT SIDE IMPACT SENSOR 2

LEFT SIDE IMPACT SENSOR 2 - 2 WAY

CAV	CIRCUIT	FUNCTION
1	R19 18LG/WT	LEFT SIDE IMPACT SENSOR 2 GROUND
2	R17 18LG	LEFT SIDE IMPACT SENSOR 2 SIGNAL

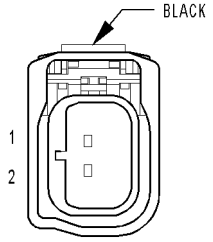

LEFT SIDE IMPACT SENSOR 3

LEFT SIDE IMPACT SENSOR 3 - BLACK 2 WAY

CAV	CIRCUIT	FUNCTION
1	R23 20LB/YL	LEFT SIDE IMPACT SENSOR 3 GROUND
2	R21 20LB/WT	LEFT SIDE IMPACT SENSOR 3 SIGNAL

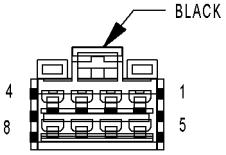

LEFT SLIDING DOOR CONTROL MODULE C1 (POWER SLIDING DOOR)

LEFT SLIDING DOOR CONTROL MODULE C1 (POWER SLIDING DOOR) - BLACK 8 WAY

CAV	CIRCUIT	FUNCTION
1	Q45 18OR/GY	LEFT CINCH/RELEASE MOTOR CLUTCH DRIVER
2	Q67 16TN/BR	LEFT SLIDING DOOR OPEN DRIVER
3	Q69 16TN/OR	LEFT SLIDING DOOR CLOSE DRIVER
4	-	-
5	A113 14WT/RD	FUSED B(+)
6	-	-
7	-	-
8	Z123 14BK/WT	GROUND

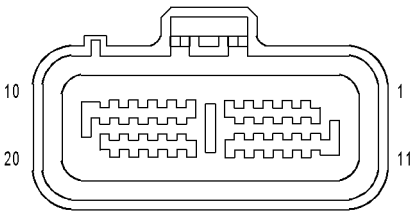

LEFT SLIDING DOOR CONTROL MODULE C2 (POWER SLIDING DOOR)

LEFT SLIDING DOOR CONTROL MODULE C2 (POWER SLIDING DOOR) - 20 WAY

CAV	CIRCUIT	FUNCTION
1	Q71 20TN/VT	LEFT DOOR MOTOR HALL EFFECT SUPPLY
2	-	-
3	Q35 20OR/GY	LEFT DOOR LOCK SENSE
4	Q55 20OR/BR	LEFT DOOR IN/OUT HANDLE SWITCH SENSE
5	-	-
6	-	-
7	Q63 18OR/TN	LEFT DOOR MOTOR CLUTCH DRIVER
8	Q47 18TN/GY	LEFT CINCH/RELEASE MOTOR LATCH DRIVER
9	Q49 18TN/WT	LEFT CINCH/RELEASE MOTOR UNLATCH DRIVER
10	-	-
11	D25 20WT/VT	PCI BUS
12	G77 20TN/OR	LEFT SLIDING DOOR AJAR SWITCH SENSE
13	Q59 20OR/YL	LEFT PAWL SWITCH SENSE
14	Q53 20OR	LEFT FULL OPEN SWITCH SENSE
15	Z25 20BK/TN	GROUND-DRIVER SIDE IDENTIFIER (LHD/RHD)
16	-	-
17	Q73 20TN/YL	LEFT DOOR MOTOR HALL EFFECT SIGNAL
18	-	-
19	G151 20VT/BR	LEFT SLIDING DOOR WAKE UP SIGNAL
20	Z25 20BK/TN	GROUND

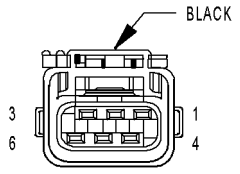

LEFT SLIDING DOOR LATCH SENSING SWITCH (POWER SLIDING DOOR)

LEFT SLIDING DOOR LATCH SENSING SWITCH (POWER SLIDING DOOR) - BLACK 6 WAY

CAV	CIRCUIT	FUNCTION
1	Z77 20BK/GY	GROUND
2	Q59 20OR/YL	LEFT PAWL SWITCH SENSE
3	G77 20TN/OR	LEFT SLIDING DOOR AJAR SWITCH SENSE
4	Z77 20BK/GY	GROUND
5	Q55 20OR/BR	LEFT DOOR IN/OUT HANDLE SWITCH SENSE
6	-	-

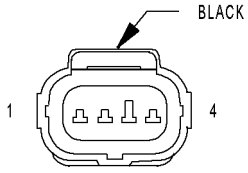

LEFT SLIDING DOOR LOCK MOTOR (POWER SLIDING DOOR)

LEFT SLIDING DOOR LOCK MOTOR (POWER SLIDING DOOR) - BLACK 4 WAY

CAV	CIRCUIT	FUNCTION
1	P5 20TN/OR	LEFT SLIDING DOOR LOCK UNLOCK DRIVER
2	P32 20TN/VT	LEFT SLIDING DOOR LOCK DRIVER
3	Q35 20OR/GY	LEFT DOOR LOCK SENSE
4	Z77 20BK/GY	GROUND

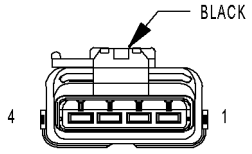

LEFT SLIDING DOOR LOCK MOTOR/AJAR SWITCH (MANUAL SLIDING DOOR)

LEFT SLIDING DOOR LOCK MOTOR/AJAR SWITCH (MANUAL SLIDING DOOR) - BLACK 4 WAY

CAV	CIRCUIT	FUNCTION
1	P5 20BK/DB	LEFT SLIDING DOOR UNLOCK DRIVER
2	P32 20BK/TN	LEFT SLIDING DOOR LOCK DRIVER
3	G77 20BK/DG	LEFT SLIDING DOOR AJAR SWITCH SENSE
4	Z77 20BK	GROUND

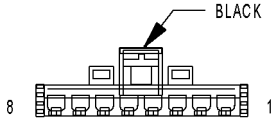

LEFT SLIDING DOOR MOTOR (POWER SLIDING DOOR)

LEFT SLIDING DOOR MOTOR (POWER SLIDING DOOR) - BLACK 8 WAY

CAV	CIRCUIT	FUNCTION
1	-	-
2	Q71 20TN/VT	LEFT DOOR MOTOR HALL EFFECT SUPPLY
3	Q69 16TN/OR	LEFT SLIDING DOOR CLOSE DRIVER
4	Z163 18BK/TN	GROUND
5	Q63 18OR/TN	LEFT DOOR MOTOR CLUTCH DRIVER
6	Q67 16TN/BR	LEFT SLIDING DOOR OPEN DRIVER
7	Z33 20BK/TN	GROUND
8	Q73 20TN/YL	LEFT DOOR MOTOR HALL EFFECT SIGNAL

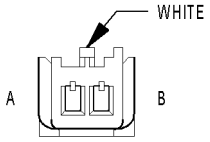

LEFT SPEED CONTROL SWITCH

LEFT SPEED CONTROL SWITCH - WHITE 2 WAY

CAV	CIRCUIT	FUNCTION
A	V37 20VT (DIESEL)	SPEED CONTROL SWITCH SIGNAL
A	V37 20VT (GAS)	S/C SWITCH NO. 1 SIGNAL
B	Z23 20BK/VT	LEFT SPEED CONTROL SWITCH GROUND

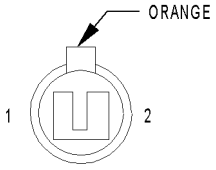

LEFT TURN SIGNAL LAMP (EXPORT)

LEFT TURN SIGNAL LAMP (EXPORT) - ORANGE 2 WAY

CAV	CIRCUIT	FUNCTION
1	Z343 16BR	GROUND
2	L61 16YL	LEFT FRONT TURN SIGNAL DRIVER

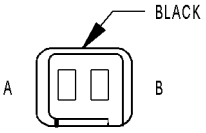

LEFT VISOR/VANITY LAMP (PREMIUM/LUXURY EXCEPT EXPORT)

LEFT VISOR/VANITY LAMP (PREMIUM/LUXURY EXCEPT EXPORT) - BLACK 2 WAY

CAV	CIRCUIT	FUNCTION
A	Z327 20BK/OR	GROUND
B	M27 20YL/LB	READING LAMP DRIVER

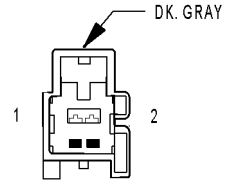

LICENSE LAMP (MANUAL RELEASE)

LICENSE LAMP (MANUAL RELEASE) - DK. GRAY 2 WAY

CAV	CIRCUIT	FUNCTION
1	L77 18WT/BR	FUSED PARK LAMP RELAY OUTPUT (LEFT)
2	Z367 20BK/BR	GROUND

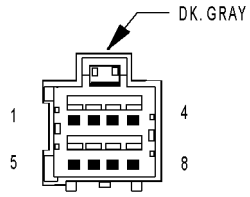

LICENSE LAMP (POWER LIFTGATE)

LICENSE LAMP (POWER LIFTGATE) - DK. GRAY 8 WAY

CAV	CIRCUIT	FUNCTION
1	L77 18WT/BR	FUSED PARK LAMP RELAY OUTPUT (LEFT)
2	Z367 20BK/BR	GROUND
3	P30 20TN/DG	LIFTGATE HANDLE SWITCH SENSE
4	Z430 20BK/LG	GROUND
5	Q94 20TN/LG	LIFTGATE CHIME DRIVER
6	Z294 20BK/LG	GROUND
7	G32 20VT/LB	LIFTGATE TEMPERATURE SENSOR SIGNAL
8	Z78 20BK/OR	GROUND

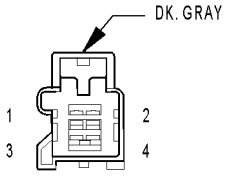

LICENSE LAMP (POWER RELEASE)

LICENSE LAMP (POWER RELEASE) - DK. GRAY 4 WAY

CAV	CIRCUIT	FUNCTION
1	L77 18WT/BR	FUSED PARK LAMP RELAY OUTPUT (LEFT)
2	Z367 20BK/BR	GROUND
3	P30 20TN/DG	LIFTGATE HANDLE SWITCH SENSE
4	Z430 20BK/LG	GROUND

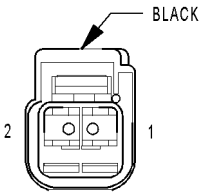

LIFT PUMP MOTOR (DIESEL)

LIFT PUMP MOTOR (DIESEL) - BLACK 2 WAY

CAV	CIRCUIT	FUNCTION
1	N2 18OR	LIFT PUMP RELAY OUTPUT
2	Z201 18OR	GROUND

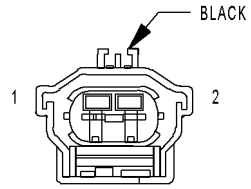

LIFTGATE AJAR SWITCH (MANUAL RELEASE)

LIFTGATE AJAR SWITCH (MANUAL RELEASE) - BLACK 2 WAY

CAV	CIRCUIT	FUNCTION
1	Z78 20BK/OR	GROUND
2	G78 20VT/OR	LIFTGATE AJAR SWITCH SENSE

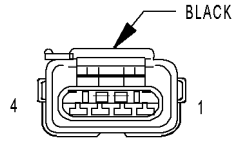

LIFTGATE AJAR SWITCH (POWER RELEASE)

LIFTGATE AJAR SWITCH (POWER RELEASE) - BLACK 4 WAY

CAV	CIRCUIT	FUNCTION
1	Z78 20BK/OR	GROUND
2	G78 20VT/OR	LIFTGATE AJAR SWITCH SENSE
3	P31 20TN/YL	LIFTGATE RELEASE DRIVER
4	Z231 20BK/YL	GROUND

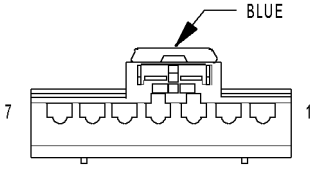

LIFTGATE CINCH/RELEASE MOTOR (POWER LIFTGATE)

LIFTGATE CINCH/RELEASE MOTOR (POWER LIFTGATE) - BLUE 7 WAY

CAV	CIRCUIT	FUNCTION
1	Z78 20BK/OR	GROUND
2	G78 20VT/OR	LIFTGATE AJAR SWITCH SENSE
3	Q60 20OR/YL	LIFTGATE PAWL SWITCH SENSE
4	Z245 18BK/GY	GROUND
5	Q85 18TN/WT	LIFTGATE LATCH RELEASE DRIVER
6	Q84 18TN/GY	LIFTGATE LATCH CINCH DRIVER
7	Q83 18OR/GY	LIFTGATE LATCH CLUTCH DRIVER

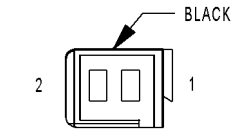

LIFTGATE LEFT PINCH SENSOR (POWER LIFTGATE)

LIFTGATE LEFT PINCH SENSOR (POWER LIFTGATE) - BLACK 2 WAY

CAV	CIRCUIT	FUNCTION
1	Q77 20OR/DB	RIGHT PINCH SENSOR SIGNAL
2	Q76 20OR/LB	PINCH SENSOR SIGNAL

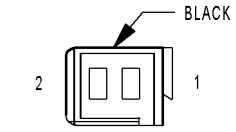

LIFTGATE RIGHT PINCH SENSOR (POWER LIFTGATE)

LIFTGATE RIGHT PINCH SENSOR (POWER LIFTGATE) - BLACK 2 WAY

CAV	CIRCUIT	FUNCTION
1	Q77 20OR/DB	RIGHT PINCH SENSOR SIGNAL
2	Z78 20BK/OR	GROUND

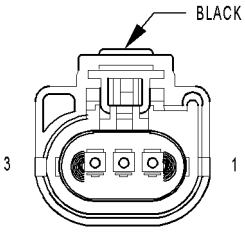

MANIFOLD ABSOLUTE PRESSURE SENSOR (GAS)

MANIFOLD ABSOLUTE PRESSURE SENSOR (GAS) - BLACK 3 WAY

CAV	CIRCUIT	FUNCTION
1	K1 18VT/BR	MAP SIGNAL
2	K900 18DB/DG	SENSOR GROUND
3	F855 18PK/YL	5 VOLT SUPPLY

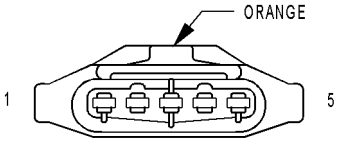

MASS AIR FLOW SENSOR (DIESEL)

MASS AIR FLOW SENSOR (DIESEL) - ORANGE 5 WAY

CAV	CIRCUIT	FUNCTION
1	-	-
2	K342 16BR/WT	ECM/PCM RELAY OUTPUT
3	K957 20BK/OR	MASS AIR FLOW SENSOR GROUND
4	F855 20PK/YL	SENSOR REFERENCE VOLTAGE A
5	K55 20DB/OR	MASS AIR FLOW SENSOR SIGNAL

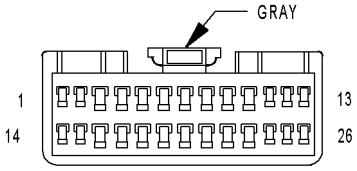

MEMORY SEAT/MIRROR/ADJUSTABLE PEDALS MODULE C1

MEMORY SEAT/MIRROR/ADJUSTABLE PEDALS MODULE C1 - GRAY 26 WAY

CAV	CIRCUIT	FUNCTION
1	P205 14LG/DB	ADJUSTABLE PEDALS MOTOR FORWARD
2	-	-
3	P69 22TN/DB (LHD)	LEFT MIRROR SENSOR GROUND
3	P66 20TN/LG (RHD)	RIGHT MIRROR SENSOR GROUND
4	-	-
5	P64 22TN (LHD)	LEFT MIRROR VERTICAL POSITION SIGNAL
5	P67 22TN/OR (RHD)	RIGHT MIRROR VERTICAL POSITION SIGNAL
6	Q103 18OR/LG (EXCEPT EXPORT)	ADJUSTABLE PEDALS SWITCH FORWARD
7	Q102 18OR/LB (EXCEPT EXPORT)	ADJUSTABLE PEDALS SWITCH REARWARD
8	P65 22TN/VT (LHD)	LEFT MIRROR HORIZONTAL POSITION SIGNAL
8	P68 20TN/YL (RHD)	RIGHT MIRROR HORIZONTAL POSITION SIGNAL
9	P73 20TN/YL (LHD)	LEFT MIRROR COMMON DRIVER (RIGHT/DOWN)
9	P70 20TN/LB (RHD)	RIGHT MIRROR COMMON DRIVER (RIGHT/DOWN)
10	-	-
11	D25 20WT/VT	PCI BUS
12	-	-
13	P206 14LG/TN (EXCEPT EXPORT)	ADJUSTABLE PEDALS MOTOR REARWARD
14	-	-
15	-	-
16	G11 20VT/TN (EXCEPT EXPORT)	ADJUSTABLE PEDALS SENSOR FEED
17	P75 20TN/LG (LHD)	LEFT MIRROR LEFT DRIVER
17	P74 20TN/DB (RHD)	RIGHT MIRROR LEFT DRIVER
18	P71 20TN/DG (LHD)	LEFT MIRROR UP DRIVER
18	P72 20TN/GY (RHD)	RIGHT MIRROR UP DRIVER
19	G12 22VT/BR (EXCEPT EXPORT)	ADJUSTABLE PEDALS SENSOR SIGNAL
20	G912 20VT/WT (EXCEPT EXPORT)	ADJUSTABLE PEDALS SENSOR RETURN
21	-	-
22	-	-
23	-	-
24	-	-
25	-	-
26	-	-

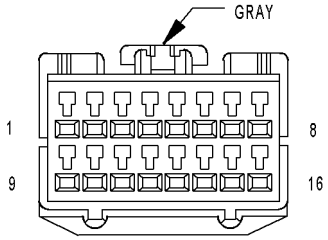

MEMORY SEAT/MIRROR/ADJUSTABLE PEDALS MODULE C2

MEMORY SEAT/MIRROR/ADJUSTABLE PEDALS MODULE C2 - GRAY 16 WAY

CAV	CIRCUIT	FUNCTION
1	P19 20LG/LB	DRIVER SEAT FRONT UP SWITCH SENSE
2	P11 20LG/YL	DRIVER SEAT REAR UP SWITCH SENSE
3	P25 20LG/VT	DRIVER SEAT HORIZONTAL POSITION SIGNAL
4	P47 20LG/LB	DRIVER SEAT RECLINER POSITION SIGNAL
5	P26 20LG	DRIVER SEAT FRONT RISER POSITION SIGNAL
6	P27 20LG/DB	DRIVER SEAT REAR RISER POSITION SIGNAL
7	P21 20LG/TN	DRIVER SEAT FRONT DOWN SWITCH SENSE
8	P13 20LG/OR	DRIVER SEAT REAR DOWN SWITCH SENSE
9	P15 20LG/WT	DRIVER SEAT HORIZONTAL FORWARD SWITCH SENSE
10	P43 20LG/VT	DRIVER SEAT RECLINER UP SWITCH SENSE
11	P29 20LG/WT	DRIVER SEAT SENSOR 5 VOLT SUPPLY
12	P28 20LG/BR	DRIVER SEAT POSITION SENSOR GROUND
13	-	-
14	P17 20LG/DG	DRIVER SEAT HORIZONTAL REARWARD SWITCH SENSE
15	P41 20LG/DB	DRIVER SEAT RECLINER DOWN SWITCH SENSE
16	-	-

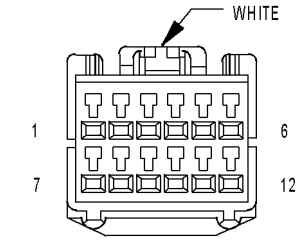

MEMORY SEAT/MIRROR/ADJUSTABLE PEDALS MODULE C3

MEMORY SEAT/MIRROR/ADJUSTABLE PEDALS MODULE C3 - WHITE 12 WAY

CAV	CIRCUIT	FUNCTION
1	P141 14LG/BR	DRIVER SEAT RECLINER DOWN DRIVER
2	P115 14LG	DRIVER SEAT HORIZONTAL FORWARD DRIVER
3	P117 14LG/LB	DRIVER SEAT HORIZONTAL REARWARD DRIVER
4	P111 14LG/YL	DRIVER SEAT REAR UP DRIVER
5	P119 14LG/DG	DRIVER SEAT FRONT UP DRIVER
6	-	-
7	-	-
8	P143 14LG/GY	DRIVER SEAT RECLINER UP DRIVER
9	P9 20LG/OR	DRIVER SEAT SWITCH B(+) SUPPLY
10	-	-
11	P113 14LG/WT	DRIVER SEAT REAR DOWN DRIVER
12	P121 14LG/DB	DRIVER SEAT FRONT DOWN DRIVER

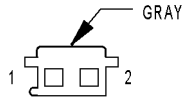

MEMORY SEAT/MIRROR/ADJUSTABLE PEDALS MODULE C4

MEMORY SEAT/MIRROR/ADJUSTABLE PEDALS MODULE C4 - GRAY 2 WAY

CAV	CIRCUIT	FUNCTION
1	A210 14OR/RD	FUSED B(+)
2	Z849 14BK/OR	GROUND

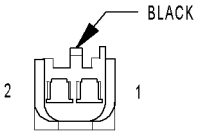

MEMORY SET SWITCH

MEMORY SET SWITCH - BLACK 2 WAY

CAV	CIRCUIT	FUNCTION
1	G200 20VT/BR (EXCEPT EXPORT)	MEMORY SELECT SWITCH MUX
1	G200 22VT/BR (EXPORT)	MEMORY SELECT SWITCH MUX
2	G920 20VT/YL (EXCEPT EXPORT)	MEMORY SELECT SWITCH RETURN
2	G920 22VT/YL (EXPORT)	MEMORY SELECT SWITCH RETURN

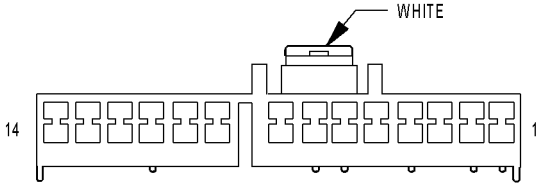

MESSAGE CENTER (EXPORT)

MESSAGE CENTER (EXPORT) - WHITE 14 WAY

CAV	CIRCUIT	FUNCTION
1	L160 20WT/TN (LHD)	RIGHT TURN INDICATOR DRIVER
1	G700 20VT/YL (RHD DIESEL)	SUPPLEMENTAL HEAT INDICATOR SENSE
2	G3 20VT/LB (LHD)	MALFUNCTION INDICATOR LAMP DRIVER
3	L134 20WT/GY (RHD)	HIGH BEAM INDICATOR DRIVER
4	L160 20WT/TN (RHD)	RIGHT TURN INDICATOR DRIVER
5	-	-
6	G7 20VT/GY (LHD)	LOW OIL PRESSURE INDICATOR DRIVER
7	A701 18BR/RD (LHD)	FUSED B(+) (HAZARD)
8	A701 18BR/RD (RHD)	FUSED B(+) (HAZARD)
9	G7 20VT/GY (RHD)	LOW OIL PRESSURE INDICATOR DRIVER
10	-	-
11	L161 20WT/LG (LHD)	LEFT TURN INDICATOR DRIVER
12	L134 20WT/GY (LHD)	HIGH BEAM INDICATOR DRIVER
13	G3 20VT/LB (RHD)	MALFUNCTION INDICATOR LAMP DRIVER
14	G700 20VT/YL (LHD DIESEL)	SUPPLEMENTAL HEAT INDICATOR SENSE
14	L161 20WT/LG (RHD)	LEFT TURN INDICATOR DRIVER

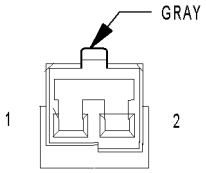

MODE DOOR ACTUATOR

MODE DOOR ACTUATOR - GRAY 2 WAY

CAV	CIRCUIT	FUNCTION
1	C135 20DB/GY (ATC)	MODE DOOR DRIVER (B)
1	C34 20DB/LB (MTC)	COMMON DOOR DRIVER (B)
2	C35 20LB/OR	MODE DOOR DRIVER (A)

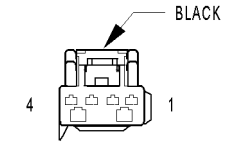

MULTI-FUNCTION SWITCH

MULTI-FUNCTION SWITCH - BLACK 4 WAY

CAV	CIRCUIT	FUNCTION
1	W52 22BR/YL	FRONT WIPER SWITCH MUX
2	G902 22VT/LB	MULTI-FUNCTION SWITCH MUX RETURN
3	L305 20WT/LB	TURN SIGNAL SWITCH MUX
4	G194 22VT/LG	HIGH BEAM/FRONT WASHER SWITCH MUX

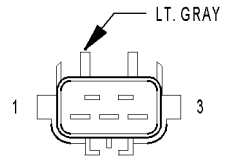

NATURAL VACUUM LEAK DETECTION ASSEMBLY (EXCEPT EXPORT)

NATURAL VACUUM LEAK DETECTION ASSEMBLY (EXCEPT EXPORT) - LT. GRAY 3 WAY

CAV	CIRCUIT	FUNCTION
1	Z166 18BK/WT	GROUND
2	K107 20VT/WT	NVLD SWITCH SIGNAL
3	K106 20VT/LB	NVLD SOL CONTROL

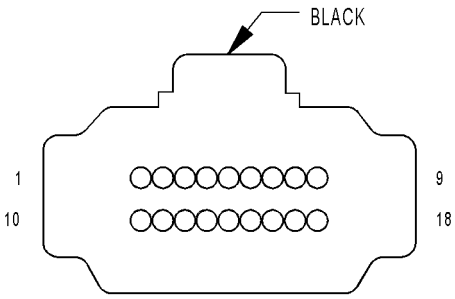

OCCUPANT CLASSIFICATION MODULE

OCCUPANT CLASSIFICATION MODULE - BLACK 18 WAY

CAV	CIRCUIT	FUNCTION
1	-	-
2	-	-
3	-	-
4	D105 20LG/LB	BELT TENSION SENSOR SIGNAL
5	Z104 20BK/LG	GROUND
6	R741 20LG/VT	PASSENGER BLADDER PRESSURE SENSOR SIGNAL
7	R740 20LG/OR	PASSENGER BLADDER PRESSURE SENSOR POWER
8	D25 20WT/VT	PCI BUS
9	F201 20PK/OR	ORC RUN-START DRIVER
10	-	-
11	-	-
12	-	-
13	-	-
14	R986 20LG/BR	BELT TENSION SENSOR GROUND
15	R941 20LG/DG	PASSENGER BLADDER PRESSURE SENSOR GROUND
16	R86 20LG/LB	BELT TENSION SENSOR FEED
17	-	-
18	-	-

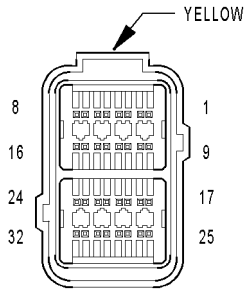

OCCUPANT RESTRAINT CONTROLLER C1

OCCUPANT RESTRAINT CONTROLLER C1 - YELLOW 32 WAY

CAV	CIRCUIT	FUNCTION
1	R53 20LG/YL	DRIVER SEAT BELT TENSIONER LINE 2
2	R55 20LG/DG	DRIVER SEAT BELT TENSIONER LINE 1
3	R56 20LB/DG (EXCEPT OCCUPANT SENSING)	PASSENGER SEAT BELT TENSIONER LINE 1
4	R54 20LB/YL (EXCEPT OCCUPANT SENSING)	PASSENGER SEAT BELT TENSIONER LINE 2
5	-	-
6	-	-
7	R4 20OR/LB (SIDE AIRBAG/OCCUPANT SENSING)	RIGHT CURTAIN SQUIB 1 LINE 1
8	R2 20WT/LB (SIDE AIRBAG/OCCUPANT SENSING)	RIGHT CURTAIN SQUIB 1 LINE 2
9	R57 20LG/GY	DRIVER SEAT BELT SWITCH SENSE
10	R58 20LB/GY (OCCUPANT SENSING)	PASSENGER SEAT BELT SWITCH SENSE
11	R59 20LG/TN	DRIVER SEAT BELT SWITCH GROUND
12	R60 20LG/TN (OCCUPANT SENSING)	PASSENGER SEAT BELT SWITCH GROUND
13	-	-
14	-	-
15	R13 20LB (SIDE AIRBAG)	LEFT SIDE IMPACT SENSOR 1 SIGNAL
16	R16 20BR/LG (SIDE AIRBAG)	RIGHT SIDE IMPACT SENSOR 1 GROUND
17	-	-
18	-	-
19	R15 20DB (EXCEPT RHD LWB/SIDE AIRBAG)	LEFT SIDE IMPACT SENSOR 1 GROUND
19	R15 20LB (RHD LWB/SIDE AIRBAG)	LEFT SIDE IMPACT SENSOR 1 GROUND
20	R19 20LG/WT (SIDE AIRBAG)	LEFT SIDE IMPACT SENSOR 2 GROUND
21	R20 20WT/LG (SIDE AIRBAG)	RIGHT SIDE IMPACT SENSOR 2 GROUND
22	R17 20LG (SIDE AIRBAG)	LEFT SIDE IMPACT SENSOR 2 SIGNAL
23	R18 20LB (SIDE AIRBAG)	RIGHT SIDE IMPACT SENSOR 2 SIGNAL
24	R14 20TN/LG (SIDE AIRBAG)	RIGHT SIDE IMPACT SENSOR 1 SIGNAL
25	R1 20LB/WT (SIDE AIRBAG)	LEFT CURTAIN SQUIB 1 LINE 2
26	R3 20LB/OR (SIDE AIRBAG)	LEFT CURTAIN SQUIB 1 LINE 1
27	R4 20OR/LB (SIDE AIRBAG/EXCEPT OCCUPANT SENSING)	RIGHT CURTAIN SQUIB 1 LINE 1
28	R2 20WT/LB (SIDE AIRBAG/EXCEPT OCCUPANT SENSING)	RIGHT CURTAIN SQUIB 1 LINE 2
29	-	-
30	-	-
31	R56 20LB/DG (OCCUPANT SENSING)	PASSENGER SEAT BELT TENSIONER LINE 1
32	R54 20LB/YL (OCCUPANT SENSING)	PASSENGER SEAT BELT TENSIONER LINE 2

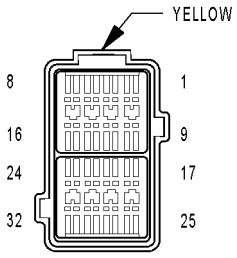

OCCUPANT RESTRAINT CONTROLLER C2

OCCUPANT RESTRAINT CONTROLLER C2 - YELLOW 32 WAY

CAV	CIRCUIT	FUNCTION
1	R43 20LG/BR	DRIVER SQUIB 1 LINE 2
2	R45 20LG/OR	DRIVER SQUIB 1 LINE 1
3	R63 20LG/WT	DRIVER SQUIB 2 LINE 1
4	R61 20LG/VT (EXCEPT EXPORT)	DRIVER SQUIB 2 LINE 2
4	R61 20LB/VT (EXPORT)	DRIVER SQUIB 2 LINE 1
5	R9 20LB/YL (LHD)	DRIVER KNEE BLOCKER SQUIB LINE 1
6	R11 20LB/DB (LHD)	DRIVER KNEE BLOCKER SQUIB LINE 2
7	-	-
8	-	-
9	G104 20VT/GY (OCCUPANT SENSING)	PASSENGER AIRBAG ON/OFF INDICATOR LAMP GROUND
10	R22 20WT/LB (SIDE AIRBAG)	RIGHT SIDE IMPACT SENSOR 3 SIGNAL
11	-	-
12	R82 20WT/LB	RIGHT FRONT IMPACT SENSOR GROUND
13	-	-
14	R23 20LB/YL (SIDE AIRBAG)	LEFT SIDE IMPACT SENSOR 3 GROUND
15	D25 20WT/VT	PCI BUS
16	F201 20PK/OR	ORC RUN-START DRIVER
17	-	-
18	-	-
19	R24 20YL/LB (SIDE AIRBAG)	RIGHT SIDE IMPACT SENSOR 3 GROUND
20	R81 20LB/WT	LEFT FRONT IMPACT SENSOR GROUND
21	-	-
22	Z12 18BK/OR	GROUND
23	-	-
24	F100 20PK/VT	ORC RUN ONLY DRIVER
25	R79 20LB/VT	LEFT FRONT IMPACT SENSOR SIGNAL
26	R80 20VT/LB	RIGHT FRONT IMPACT SENSOR SIGNAL
27	-	-
28	R21 20LB/WT (SIDE AIRBAG)	LEFT SIDE IMPACT SENSOR 3 SIGNAL
29	R42 20LB/BR	PASSENGER SQUIB 1 LINE 2
30	R44 20LB/OR	PASSENGER SQUIB 1 LINE 1
31	R64 20LB/WT	PASSENGER SQUIB 2 LINE 1
32	R62 20LB/VT	PASSENGER SQUIB 2 LINE 2

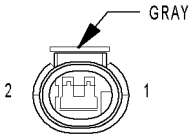

OUTPUT SPEED SENSOR

OUTPUT SPEED SENSOR - GRAY 2 WAY

CAV	CIRCUIT	FUNCTION
1	T13 18DG/VT	SPEED SENSOR GROUND
2	T14 18DG/BR	OUTPUT SPEED SENSOR SIGNAL

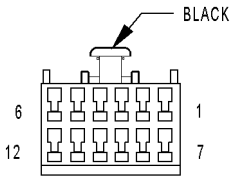

OVERHEAD CONSOLE (EXCEPT BASE)

OVERHEAD CONSOLE (EXCEPT BASE) - BLACK 12 WAY

CAV	CIRCUIT	FUNCTION
1	G23 22VT/DB	SLIDING DOORS OVERHEAD SWITCH MUX
2	G25 22VT/TN	LIFTGATE SWITCH MUX
3	D25 20WT/VT	PCI BUS
4	Z113 20BK/DB	GROUND
5	A114 20GY/RD	FUSED B(+) (I.O.D.)
6	F503 20WT/PK	FUSED IGNITION SWITCH OUTPUT (RUN)
7	Z13 20BK/WT	GROUND
8	E15 20OR/DB	ASH/RECEIVER LAMP FEED
9	-	-
10	-	-
11	L24 20BK/GY (EXCEPT EXPORT/PREMIUM/LUXURY)	AUTOMATIC HEADLAMP SWITCH SENSOR
12	L1 20BK/WT (PREMIUM/LUXURY)	BACK-UP LAMP FEED

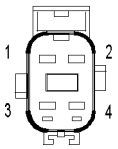

OXYGEN SENSOR 1/1 UPSTREAM (GAS)

OXYGEN SENSOR 1/1 UPSTREAM (GAS) - 4 WAY

CAV	CIRCUIT	FUNCTION
1	Z42 18BK/LG	GROUND
2	K99 18BR/LG	O2 1/1 HEATER CONTROL
3	K902 18BR/DG	O2 RETURN (UP)
4	K41 18DB/LB	O2 1/1 SIGNAL

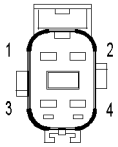

OXYGEN SENSOR 1/2 DOWNSTREAM (GAS)

OXYGEN SENSOR 1/2 DOWNSTREAM (GAS) - 4 WAY

CAV	CIRCUIT	FUNCTION
1	Z43 18BK/DB	GROUND
2	K299 18BR/WT	O2 1/2 HEATER CONTROL
3	K904 18DB/DG (2.4L)	O2 RETURN (DOWN)
3	K904 18BR/DG (3.3L/3.8L)	O2 RETURN (DOWN)
4	K141 18DB/YL	O2 1/2 SIGNAL

CONNECTOR NOT AVAILABLE

PARK ASSIST DISPLAY - 3 WAY

CAV	CIRCUIT	FUNCTION
1	X777 20DG/GY	PARK ASSIST DISPLAY SUPPLY
2	Z171 20GY/BK	GROUND
3	D777 20WT/GY	PARK ASSIST DISPLAY SIGNAL

CONNECTOR NOT AVAILABLE

PARK ASSIST MODULE - 18 WAY

CAV	CIRCUIT	FUNCTION
1	X700 20GY/OR	PARK ASSIST SENSOR SUPPLY
2	D703 20WT/OR	PARK ASSIST SENSOR NO. 3 SIGNAL
3	D704 20WT/DB	PARK ASSIST SENSOR NO. 4 SIGNAL
4	X777 20DG/GY	PARK ASSIST DISPLAY SUPPLY
5	D777 20WT/GY	PARK ASSIST DISPLAY SIGNAL
6	Z171 20GY/BK	GROUND
7	-	-
8	-	-
9	-	-
10	F20 20PK/WT	FUSED IGNITION SWITCH OUTPUT (RUN-START)
11	Z177 20DG/BK	GROUND
12	D25 20WT/VT	PCI BUS
13	-	-
14	-	-
15	-	-
16	D700 20WT/GY	PARK ASSIST SENSOR NO. 1 SIGNAL
17	D701 20WT/LB	PARK ASSIST SENSOR NO. 2 SIGNAL
18	X750 20GY/LB	PARK ASSIST SENSOR GROUND

CONNECTOR NOT AVAILABLE

PARK ASSIST SENSOR NO. 1 - 3 WAY

CAV	CIRCUIT	FUNCTION
1	D700 20WT/GY	PARK ASSIST SENSOR NO. 1 SIGNAL
2	X750 20GY/LB	PARK ASSIST SENSOR GROUND
3	X700 20GY/OR	PARK ASSIST SENSOR SUPPLY

CONNECTOR NOT AVAILABLE

PARK ASSIST SENSOR NO. 2 - 3 WAY

CAV	CIRCUIT	FUNCTION
1	D701 20WT/LB	PARK ASSIST SENSOR NO. 2 SIGNAL
2	X750 20GY/LB	PARK ASSIST SENSOR GROUND
3	X700 20GY/OR	PARK ASSIST SENSOR SUPPLY

CONNECTOR NOT AVAILABLE

PARK ASSIST SENSOR NO. 3 - 3 WAY

CAV	CIRCUIT	FUNCTION
1	D703 20WT/BK	PARK ASSIST SENSOR NO. 3 SIGNAL
2	X750 20GY/LB	PARK ASSIST SENSOR GROUND
3	X700 20GY/OR	PARK ASSIST SENSOR SUPPLY

CONNECTOR NOT AVAILABLE

PARK ASSIST SENSOR NO. 4 - 3 WAY

CAV	CIRCUIT	FUNCTION
1	D704 20WT/DB	PARK ASSIST SENSOR NO. 4 SIGNAL
2	X750 20GY/LB	PARK ASSIST SENSOR GROUND
3	X700 20GY/OR	PARK ASSIST SENSOR SUPPLY

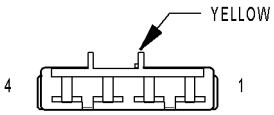

PASSENGER AIRBAG

PASSENGER AIRBAG - YELLOW 4 WAY

CAV	CIRCUIT	FUNCTION
1	R42 20LB/BR	PASSENGER SQUIB 1 LINE 2
2	R44 20LB/OR	PASSENGER SQUIB 1 LINE 1
3	R62 20LB/VT	PASSENGER SQUIB 2 LINE 2
4	R64 20LB/WT	PASSENGER SQUIB 2 LINE 1

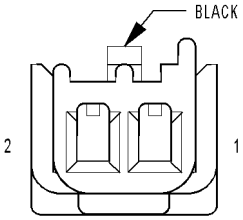

PASSENGER AIRBAG ON/OFF INDICATOR LAMP

PASSENGER AIRBAG ON/OFF INDICATOR LAMP - BLACK 2 WAY

CAV	CIRCUIT	FUNCTION
1	F201 20PK/OR	ORC RUN-START DRIVER
2	G104 20VT/GY	PASSENGER AIRBAG ON/OFF INDICATOR LAMP GROUND

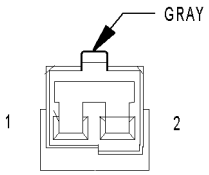

PASSENGER BLEND DOOR ACTUATOR

PASSENGER BLEND DOOR ACTUATOR - GRAY 2 WAY

CAV	CIRCUIT	FUNCTION
1	C133 20DB/WT (ATC)	PASSENGER BLEND DOOR DRIVER (B)
1	C34 20DB/LB (LHD MTC)	COMMON DOOR DRIVER (B)
1	C33 20LB/BR (RHD MTC)	PASSENGER BLEND DOOR DRIVER (A)
2	C33 20LB/BR (ATC/LHD MTC)	PASSENGER BLEND DOOR DRIVER (A)
2	C34 20DB/LB (RHD MTC)	COMMON DOOR DRIVER (B)

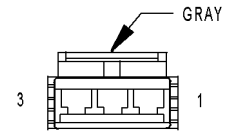

PASSENGER DOOR COURTESY LAMP (LUXURY/EXPORT)

PASSENGER DOOR COURTESY LAMP (LUXURY/EXPORT) - GRAY 3 WAY

CAV	CIRCUIT	FUNCTION
1	Z322 20BK/BR (LHD)	GROUND
1	Z321 20BK/BR (RHD)	GROUND
2	-	-
3	M21 14YL/BR (EXCEPT EXPORT)	COURTESY LAMPS DRIVER
3	M21 20YL/BR (EXPORT)	COURTESY LAMPS DRIVER

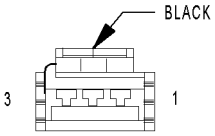

PASSENGER DOOR LOCK SWITCH

PASSENGER DOOR LOCK SWITCH - BLACK 3 WAY

CAV	CIRCUIT	FUNCTION
1	-	-
2	G160 20VT/LG (LHD)	RIGHT DOOR LOCK SWITCH MUX
2	G161 20VT/DG (RHD)	LEFT DOOR LOCK SWITCH MUX
3	Z460 20BK/LG (LHD)	GROUND
3	Z461 20BK/DG (RHD)	GROUND

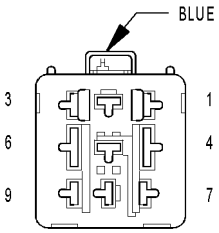

PASSENGER FOLDING MIRROR RELAY (EXPORT)

PASSENGER FOLDING MIRROR RELAY (EXPORT) - BLUE 9 WAY

CAV	CIRCUIT	FUNCTION
1	-	-
2	-	-
3	-	-
4	A108 20LG/RD	FUSED B(+)
5	P164 18LG/DB	PASSENGER FOLDING MIRROR RELAY INPUT
6	P162 18LG/DG	PASSENGER FOLDING MIRROR RELAY CONTROL
7	-	-
8	P160 18TN/LG	PASSENGER FOLDING MIRROR RELAY OUTPUT
9	-	-

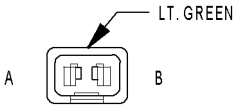

PASSENGER HEATED SEAT BACK

PASSENGER HEATED SEAT BACK - LT. GREEN 2 WAY

CAV	CIRCUIT	FUNCTION
A	S1 16DB (EXCEPT EXPORT)	SEAT HEATER B(+) DRIVER
A	S1 18WT (EXPORT)	SEAT HEATER B(+) DRIVER
B	Z848 16BK/OR (EXCEPT EXPORT)	GROUND
B	S2 18GY (EXPORT)	SEAT HEATER GROUND

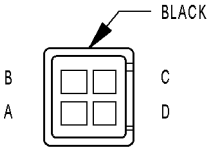

PASSENGER HEATED SEAT CUSHION

PASSENGER HEATED SEAT CUSHION - BLACK 4 WAY

CAV	CIRCUIT	FUNCTION
A	S1 16DB (EXCEPT EXPORT)	SEAT HEATER B(+) DRIVER
A	P88 16LG/LB (EXPORT)	SEAT HEATER B(+) DRIVER
B	S2 20DG (EXCEPT EXPORT)	SEAT HEATER GROUND
B	Z848 18BK/OR (EXPORT)	GROUND
C	Z848 20BK/OR (EXCEPT EXPORT)	GROUND
C	P89 20LG/BR (EXPORT)	SEAT SENSOR 5 VOLT SUPPLY
D	Z848 16BK/OR (EXCEPT EXPORT)	GROUND
D	P87 16LG/OR (EXPORT)	SEAT TEMP SENSOR INPUT

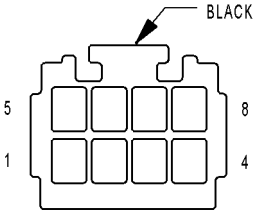

PASSENGER HEATED SEAT MODULE (EXCEPT EXPORT)

PASSENGER HEATED SEAT MODULE (EXCEPT EXPORT) - BLACK 8 WAY

CAV	CIRCUIT	FUNCTION
1	-	-
2	-	-
3	P8 20LG/DG	PASSENGER HEATED SEAT SWITCH MUX
4	Z848 16BK/OR	GROUND
5	A210 14OR/RD (EXCEPT POWER SEAT)	FUSED (+)
5	A210 16OR/RD (POWER SEAT)	FUSED B(+)
6	S2 20DG	SEAT HEATER GROUND
7	S1 16DB	SEAT HEATER B(+) DRIVER
8	F503 20WT/PK	FUSED IGNITION SWITCH OUTPUT (RUN)

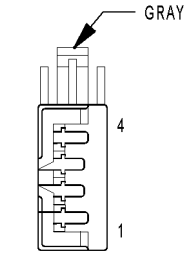

PASSENGER HEATED SEAT MODULE C1 (EXPORT)

PASSENGER HEATED SEAT MODULE C1 (EXPORT) - GRAY 4 WAY

CAV	CIRCUIT	FUNCTION
1	Z848 18BK/OR	GROUND
2	P8 20LG/WT	PASSENGER HEATED SEAT SWITCH MUX
3	F503 20WT/PK	FUSED IGNITION SWITCH OUTPUT (RUN)
4	A210 14OR/RD	FUSED (B+)

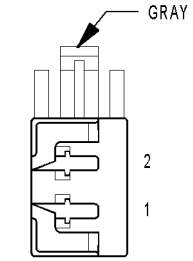

PASSENGER HEATED SEAT MODULE C2 (EXPORT)

PASSENGER HEATED SEAT MODULE C2 (EXPORT) - GRAY 2 WAY

CAV	CIRCUIT	FUNCTION
1	S1 18WT	SEAT BACK HEATER B(+) DRIVER
2	S2 18GY	SEAT BACK HEATER GROUND

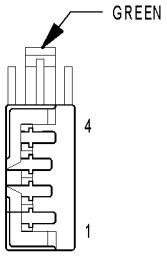

PASSENGER HEATED SEAT MODULE C3 (EXPORT)

PASSENGER HEATED SEAT MODULE C3 (EXPORT) - GREEN 4 WAY

CAV	CIRCUIT	FUNCTION
1	P87 16LG/OR	SEAT TEMP SENSOR INPUT
2	P89 20LG/BR	SEAT SENSOR 5 VOLT SUPPLY
3	Z848 18BK/OR	GROUND
4	P88 16LG/LB	SEAT CUSHION HEATER B(+) DRIVER

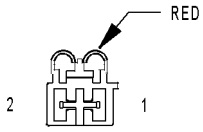

PASSENGER POWER SEAT FRONT RISER MOTOR

PASSENGER POWER SEAT FRONT RISER MOTOR - RED 2 WAY

CAV	CIRCUIT	FUNCTION
1	P18 14LG/OR	PASSENGER FRONT UP SWITCH SENSE
2	P20 14LG/LB	PASSENGER FRONT DOWN SWITCH SENSE

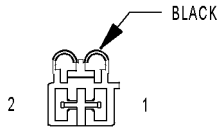

PASSENGER POWER SEAT HORIZONTAL MOTOR

PASSENGER POWER SEAT HORIZONTAL MOTOR - BLACK 2 WAY

CAV	CIRCUIT	FUNCTION
1	P14 14LG/OR	PASSENGER HORIZONTAL FORWARD SWITCH SENSE
2	P16 14LG/WT	PASSENGER HORIZONTAL REARWARD SWITCH SENSE

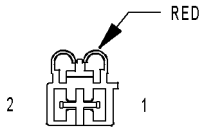

PASSENGER POWER SEAT REAR RISER MOTOR

PASSENGER POWER SEAT REAR RISER MOTOR - RED 2 WAY

CAV	CIRCUIT	FUNCTION
1	P10 14LG/TN	PASSENGER REAR UP SWITCH SENSE
2	P12 14LG/YL	PASSENGER REAR DOWN SWITCH SENSE

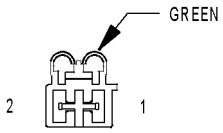

PASSENGER POWER SEAT RECLINER MOTOR

PASSENGER POWER SEAT RECLINER MOTOR - GREEN 2 WAY

CAV	CIRCUIT	FUNCTION
1	P44 14LG/VT	PASSENGER RECLINER UP SWITCH SENSE
2	P42 14LG/GY	PASSENGER RECLINER DOWN SWITCH SENSE

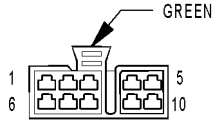

PASSENGER POWER SEAT SWITCH

PASSENGER POWER SEAT SWITCH - GREEN 10 WAY

CAV	CIRCUIT	FUNCTION
1	Z848 14BK/OR	GROUND
2	P44 14LG/VT	PASSENGER RECLINER UP SWITCH SENSE
3	P16 14LG/WT	PASSENGER HORIZONTAL REARWARD SWITCH SENSE
4	P42 14LG/GY	PASSENGER RECLINER DOWN SWITCH SENSE
5	A210 14OR/RD	FUSED B(+)
6	P14 14LG/OR	PASSENGER HORIZONTAL FORWARD SWITCH SENSE
7	P20 14LG/LB	PASSENGER FRONT DOWN SWITCH SENSE
8	P12 14LG/YL	PASSENGER REAR DOWN SWITCH SENSE
9	P10 14LG/TN	PASSENGER REAR UP SWITCH SENSE
10	P18 14LG/OR	PASSENGER FRONT UP SWITCH SENSE

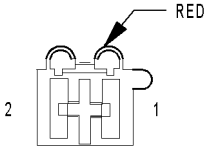

PASSENGER POWER WINDOW MOTOR

PASSENGER POWER WINDOW MOTOR - RED 2 WAY

CAV	CIRCUIT	FUNCTION
1	Q12 14OR/BR	PASSENGER WINDOW DRIVER (UP)
2	Q22 14OR/VT	PASSENGER WINDOW DRIVER (DOWN)

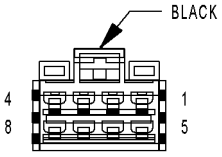

PASSENGER POWER WINDOW SWITCH

PASSENGER POWER WINDOW SWITCH - BLACK 8 WAY

CAV	CIRCUIT	FUNCTION
1	F304 12WT/PK	FUSED WINDOW CIRCUIT BREAKER OUTPUT
2	Q26 14OR/GY (EXCEPT MEMORY)	MASTER WINDOW SWITCH PASSENGER (DOWN)
2	Q26 12OR/GY (MEMORY)	MASTER WINDOW SWITCH PASSENGER (DOWN)
3	Q16 12OR/TN	MASTER WINDOW SWITCH RIGHT PASSENGER (UP)
4	-	-
5	Q22 14OR/VT (RHD)	RIGHT FRONT WINDOW DRIVER (DOWN)
6	-	-
7	-	-
8	Q12 14OR/BR (RHD)	RIGHT FRONT WINDOW DRIVER (UP)

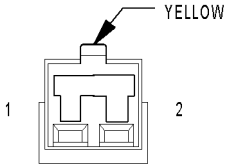

PASSENGER SEAT BELT SWITCH (OCCUPANT SENSING)

PASSENGER SEAT BELT SWITCH (OCCUPANT SENSING) - YELLOW 2 WAY

CAV	CIRCUIT	FUNCTION
1	R58 16LB/GY	PASSENGER SEAT BELT SWITCH SENSE
2	R60 16LB/TN	PASSENGER SEAT BELT SWITCH GROUND

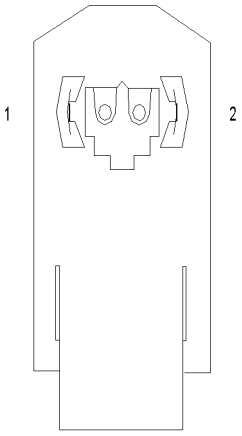

PASSENGER SEAT BELT TENSIONER

PASSENGER SEAT BELT TENSIONER - 2 WAY

CAV	CIRCUIT	FUNCTION
1	R56 18LB/DG (EXCEPT EXPORT)	PASSENGER SEAT BELT TENSIONER LINE 1
1	R54 18LB/YL (EXPORT)	PASSENGER SEAT BELT TENSIONER LINE 2
2	R54 18LB/YL (EXCEPT EXPORT)	PASSENGER SEAT BELT TENSIONER LINE 2
2	R56 18LB/DG (EXPORT)	PASSENGER SEAT BELT TENSIONER LINE 1

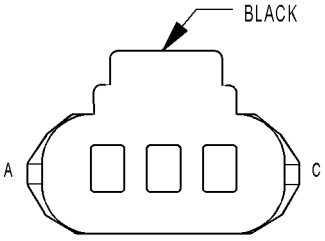

PASSENGER SEAT WEIGHT SENSOR

PASSENGER SEAT WEIGHT SENSOR - BLACK 3 WAY

CAV	CIRCUIT	FUNCTION
A	R941 20LG/DG	PASSENGER BLADDER PRESSURE SENSOR GROUND
B	R741 20LG/VT	PASSENGER BLADDER PRESSURE SENSOR SIGNAL
C	R740 20LG/OR	PASSENGER BLADDER PRESSURE SENSOR POWER

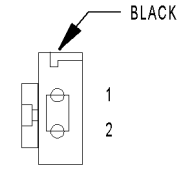

POWER FOLDING MIRROR SWITCH (EXPORT)

POWER FOLDING MIRROR SWITCH (EXPORT) - BLACK 2 WAY

CAV	CIRCUIT	FUNCTION
1	P136 20TN/YL	FOLDING MIRROR SWITCH SENSE
2	Z888 20BK/YL	GROUND

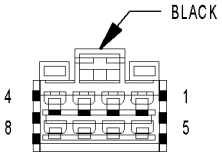

POWER LIFTGATE MODULE C1

POWER LIFTGATE MODULE C1 - BLACK 8 WAY

CAV	CIRCUIT	FUNCTION
1	Q83 18OR/GY	LIFTGATE LATCH CLUTCH DRIVER
2	Q88 16TN/BR	LIFTGATE OPEN DRIVER
3	Q89 16TN/OR	LIFTGATE CLOSE DRIVER
4	-	-
5	A115 12YL/RD	FUSED B(+)
6	-	-
7	-	-
8	Z125 14BK/WT	GROUND

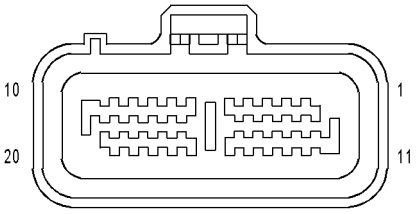

POWER LIFTGATE MODULE C2

POWER LIFTGATE MODULE C2 - 20 WAY

CAV	CIRCUIT	FUNCTION
1	Q90 20TN/VT	LIFTGATE HALL EFFECT SUPPLY
2	-	-
3	Q151 22TN/DB (EXCEPT EXPORT)	LIFTGATE ENGAGE/DISENGAGE SWITCH SENSE
3	Q151 20TN/DB (EXPORT)	LIFTGATE ENGAGE/DISENGAGE SWITCH SENSE
4	-	-
5	Q76 22OR/LB	PINCH SENSOR SIGNAL
6	-	-
7	Q86 18OR/DB	LIFTGATE GEAR ENGAGE DRIVER
8	Q84 18TN/GY	LIFTGATE LATCH CINCH DRIVER
9	Q85 18TN/WT	LIFTGATE LATCH RELEASE DRIVER
10	Q87 18OR/LG	LIFTGATE GEAR DISENGAGE DRIVER
11	D25 20WT/VT	PCI BUS
12	G78 20VT/OR	LIFTGATE AJAR SWITCH SENSE
13	Q60 22OR/YL	LIFTGATE PAWL SWITCH SENSE
14	Q51 22OR	LIFTGATE FULL OPEN SWITCH SENSE
15	-	-
16	G32 20VT/LB	LIFTGATE TEMPERATURE SENSOR SIGNAL
17	Q91 20TN/YL	LIFTGATE HALL EFFECT SIGNAL
18	Q94 22TN/LG	LIFTGATE CHIME DRIVER
19	G153 20VT/DG	LIFTGATE MODULE WAKE UP SIGNAL
20	Z87 20BK/LG	GROUND

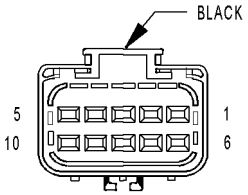

POWER LIFTGATE MOTOR

POWER LIFTGATE MOTOR - BLACK 10 WAY

CAV	CIRCUIT	FUNCTION
1	Z87 20BK/LG	GROUND
2	Q51 22OR	LIFTGATE FULL OPEN SWITCH SENSE
3	Q151 22TN/DB (EXCEPT EXPORT)	LIFTGATE ENGAGE/DISENGAGE SWITCH SENSE
3	Q151 20TN/DB (EXPORT)	LIFTGATE ENGAGE/DISENGAGE SWITCH SENSE
4	Q87 18OR/LG	LIFTGATE GEAR DISENGAGE DRIVER
5	Q86 18OR/DB	LIFTGATE GEAR ENGAGE DRIVER
6	Q88 16TN/BR	LIFTGATE OPEN DRIVER
7	Q90 20TN/VT	LIFTGATE HALL EFFECT SUPPLY
8	Q91 20TN/YL	LIFTGATE HALL EFFECT SIGNAL
9	Z87 20BK/LG	GROUND
10	Q89 16TN/OR	LIFTGATE CLOSE DRIVER

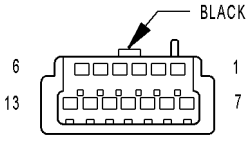

POWER MIRROR SWITCH

POWER MIRROR SWITCH - BLACK 13 WAY

CAV	CIRCUIT	FUNCTION
1	P70 20TN/LB	RIGHT MIRROR COMMON DRIVER (RIGHT/DOWN)
1	P70 20TN/LB (MEMORY)	RIGHT MIRROR COMMON DRIVER (RIGHT/DOWN)
2	-	-
3	-	-
4	-	-
5	-	-
6	P73 20TN/YL	LEFT MIRROR COMMON DRIVER (RIGHT/DOWN)
6	P73 20TN/YL (MEMORY)	LEFT MIRROR COMMON DRIVER (RIGHT/DOWN)
7	P75 20TN/LG	LEFT MIRROR LEFT DRIVER
7	P75 20TN/LG (MEMORY)	LEFT MIRROR LEFT DRIVER
8	P74 20TN/DB	RIGHT MIRROR LEFT DRIVER
8	P74 20TN/DB (MEMORY)	RIGHT MIRROR LEFT DRIVER
9	A108 20LG/RD	FUSED B(+)
10	-	-
11	Z408 18BK/LG	GROUND
12	P71 20TN/DG	LEFT MIRROR UP DRIVER
12	P71 20TN/DG (MEMORY)	LEFT MIRROR UP DRIVER
13	P72 20TN/GY	RIGHT MIRROR UP DRIVER
13	P72 20TN/GY (MEMORY)	RIGHT MIRROR UP DRIVER

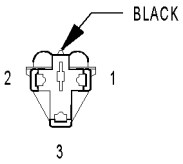

POWER OUTLET (EXCEPT LOWLINE)

POWER OUTLET (EXCEPT LOWLINE) - BLACK 3 WAY

CAV	CIRCUIT	FUNCTION
1	A105 16DB/RD	FUSED B(+)
2	-	-
3	Z738 16BK/WT	GROUND

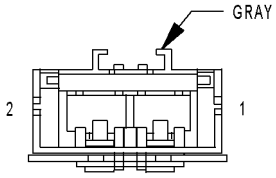

POWER SEAT CIRCUIT BREAKER (30A)

POWER SEAT CIRCUIT BREAKER (30A) - GRAY 2 WAY

CAV	CIRCUIT	FUNCTION
1	A110 12OR/RD	FUSED B(+)
2	A210 14OR/RD	FUSED SEAT SWITCH DRIVER
2	A210 14OR/RD	FUSED SEAT SWITCH DRIVER

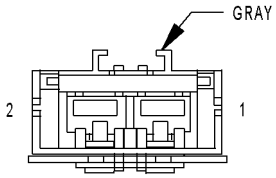

POWER WINDOW CIRCUIT BREAKER (25A)

POWER WINDOW CIRCUIT BREAKER (25A) - GRAY 2 WAY

CAV	CIRCUIT	FUNCTION
1	F30 12PK/YL	FUSED IGNITION SWITCH OUTPUT (RUN-ACC)
2	F304 12WT/PK	FUSED WINDOW CIRCUIT BREAKER OUTPUT

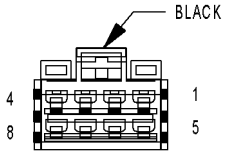

POWER WINDOW SWITCH (LHD LOWLINE)

POWER WINDOW SWITCH (LHD LOWLINE) - BLACK 8 WAY

CAV	CIRCUIT	FUNCTION
1	F304 16WT/PK	FUSED WINDOW CIRCUIT BREAKER OUTPUT
2	Z421 12BK/BR	GROUND
3	Z421 12BK/BR	GROUND
4	-	-
5	Q16 12OR/TN	MASTER WINDOW SWITCH PASSENGER (UP)
6	F304 16WT/PK	FUSED WINDOW CIRCUIT BREAKER OUTPUT
7	Z421 20BK/BR	GROUND
8	Q26 14OR/GY	MASTER WINDOW SWITCH PASSENGER (DOWN)

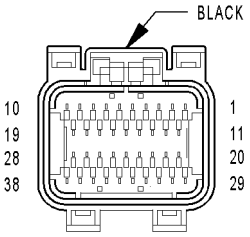

POWERTRAIN CONTROL MODULE C1

POWERTRAIN CONTROL MODULE C1 - BLACK 38 WAY

CAV	CIRCUIT	FUNCTION
1	-	-
2	-	-
3	-	-
4	-	-
5	-	-
6	-	-
7	-	-
8	-	-
9	Z130 18BK/BR	GROUND
10	-	-
11	F202 20PK/GY	FUSED IGNITION SWITCH OUTPUT (RUN-START)
12	F1 18PK/WT (EATX)	FCM OUTPUT (UNLOCK-RUN-START)
13	N7 18DB/OR (MTX)	VEHICLE SPEED SENSOR SIGNAL
14	-	-
15	-	-
16	-	-
17	-	-
18	Z131 18BK/DG	GROUND
19	-	-
20	G6 16VT/GY	ENGINE OIL PRESSURE SENSOR SIGNAL
21	-	-
22	G31 18VT/LG	AAT SIGNAL
23	-	-
24	-	-
25	D20 20WT/LG	SCI RECEIVE (PCM)
26	D123 20WT/BR (2.4L EATX)	SCI RECEIVE (TCM)
26	D123 20WT/OR (3.3L/3.8L)	SCI RECEIVE (TCM)
27	-	-
28	-	-
29	A109 18OR/RD	FUSED B(+)
30	T751 18YL	FUSED IGNITION SWITCH OUTPUT (START)
31	K141 18DB/YL	O2 1/2 SIGNAL
32	K904 18DB/DG (2.4L)	O2 RETURN (DOWN)
32	K904 18BR/DG (3.3L/3.8L)	O2 RETURN (DOWN)
33	-	-
34	-	-
35	-	-
36	D21 20WT/DG (2.4L)	SCI TRANSMIT (PCM)
36	D21 20WT/BR (3.3L/3.8L)	SCI TRANSMIT (PCM)
37	D15 18DG/YL (EATX)	SCI TRANSMIT (TCM)
38	D25 18WT/VT	PCI BUS

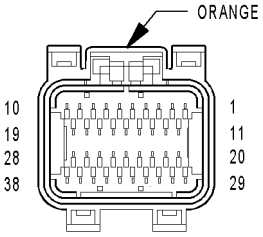

POWERTRAIN CONTROL MODULE C2

POWERTRAIN CONTROL MODULE C2 - ORANGE 38 WAY

CAV	CIRCUIT	FUNCTION
1	-	-
2	-	-
3	-	-
4	K58 16BR/VT (3.3L/3.8L)	INJECTOR CONTROL NO. 6
5	K38 16BR/OR (3.3L/3.8L)	INJECTOR CONTROL NO. 5
6	-	-
7	K18 16BR/OR (3.3L/3.8L)	COIL CONTROL NO. 3
8	K35 18DB/VT (3.3L)	EGR SOLENOID CONTROL
9	K17 16DB/TN	IGNITION COIL NO. 2 DRIVER
10	K19 16DB/DG	COIL CONTROL NO. 1
11	K14 16 BR/TN	INJECTOR CONTROL NO. 4
12	K13 16BR/LB	INJECTOR CONTROL NO. 3
13	K12 16BR/DB	INJECTOR CONTROL NO. 2
14	K11 16BR/YL	INJECTOR CONTROL NO. 1
15	-	-
16	-	-
17	-	-
18	K99 18BR/LG	O2 1/1 HEATER CONTROL
19	K20 18BR/GY	GEN FIELD CONTROL
20	K2 18VT/OR	ECT SIGNAL
21	K22 18BR/OR	TP SIGNAL
22	K34 18DB/LG (3.3L)	EGR SOLENOID SIGNAL
23	K1 18VT/BR	MAP SIGNAL
24	K942 18BR/LG (EXCEPT 3.3L)	KS RETURN
25	K42 18DB/YL (EXCEPT 3.3L)	KS SIGNAL
26	-	-
27	K900 18DB/DG	SENSOR GROUND
28	K961 18BR/VT	IAC RETURN
29	F855 20PK/YL	5 VOLT SUPPLY
30	K21 18DB/LG	IAT SIGNAL
31	K41 18DB/LB	O2 1/1 SIGNAL
32	K902 18BR/DG	O2 RETURN (UP)
33	-	-
34	K44 18DB/GY	CMP SIGNAL
35	K24 18BR/LB	CKP SIGNAL
36	-	-
37	-	-
38	K61 18VT/GY	IAC MOTOR CONTROL

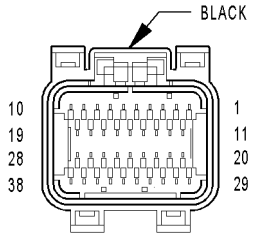

POWERTRAIN CONTROL MODULE C3

POWERTRAIN CONTROL MODULE C3 - NATURAL 38 WAY

CAV	CIRCUIT	FUNCTION
1	-	-
2	-	-
3	K51 18BR/WT	ASD RELAY CONTROL
4	-	-
5	V35 18VT/OR	S/C VENT CONTROL
6	K173 18BR/VT	RAD FAN RELAY CONTROL
7	V32 18VT/YL	SPEED CONTROL SUPPLY
8	K106 20VT/LB (EXCEPT EXPORT)	NVLD SOL CONTROL
9	K299 18BR/WT	O2 1/2 HEATER CONTROL
10	-	-
11	C13 18LB/OR	A/C CLUTCH RELAY CONTROL
12	V36 18VT/YL	S/C VACUUM CONTROL
13	-	-
14	-	-
15	-	-
16	-	-
17	-	-
18	-	-
19	K342 16BR/WT	ASD RELAY OUTPUT
20	K52 18DB/WT	EVAP PURGE CONTROL
21	T141 18YL (MTX EXPORT)	FUSED IGNITION SWITCH OUTPUT (START)
22	-	-
23	B29 18DG/WT	BRAKE SWITCH SIGNAL
24	-	-
25	-	-
26	-	-
27	-	-
28	K342 16BR/WT	ASD RELAY OUTPUT
29	K70 18DB/BR	EVAP PURGE SIGNAL
30	-	-
31	C18 18LB/BR	A/C PRESSURE SIGNAL
32	K91 18DB/YL	BATTERY TEMP SIGNAL
33	-	-
34	V37 18VT	S/C SWITCH NO. 1 SIGNAL
35	K107 20VT/WT (EXCEPT EXPORT)	NVLD SWITCH SIGNAL
36	-	-
37	K31 18BR	FUEL PUMP RELAY CONTROL
38	T752 18DG/OR	STARTER RELAY CONTROL

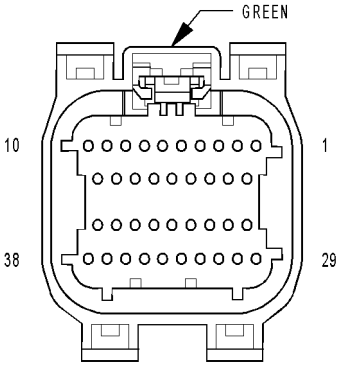

POWERTRAIN CONTROL MODULE C4

POWERTRAIN CONTROL MODULE C4 - GREEN 38 WAY

CAV	CIRCUIT	FUNCTION
1	T60 18YL/GY	OVERDRIVE SOLENOID CONTROL
2	T59 18DB/LB	UNDERDRIVE SOLENOID CONTROL
3	-	-
4	-	-
5	-	-
6	T19 18YL/DB	2-4 SOLENOID CONTROL
7	-	-
8	-	-
9	-	-
10	T20 18DG/WT	LOW/REVERSE SOLENOID CONTROL
11	-	-
12	-	-
13	Z133 16BK/LG	GROUND
14	Z133 16BK/LG	GROUND
15	T1 18DG/LB	TRS T1 SENSE
16	T3 18DG/DB	TRS T3 SENSE
17	-	-
18	T15 18YL/BR	TRANSMISSION CONTROL RELAY CONTROL
19	T16 18YL/OR	TRANSMISSION CONTROL RELAY OUTPUT
20	-	-
21	-	-
22	T9 18DG/TN	OVERDRIVE PRESSURE SWITCH SENSE
23	-	-
24	-	-
25	-	-
26	-	-
27	T41 18DG/GY	TRS T41 SENSE
28	T16 18YL/OR	TRANSMISSION CONTROL RELAY OUTPUT
29	T50 18YL/TN	LOW/REVERSE PRESSURE SWITCH SENSE
30	T47 18YL/DG	2-4 PRESSURE SWITCH SENSE
31	-	-
32	T14 18DG/BR	OUTPUT SPEED SENSOR SIGNAL
33	T52 18DG/WT	INPUT SPEED SENSOR SIGNAL
34	T13 18DG/VT	SPEED SENSOR GROUND
35	T54 18DG/OR	TRANSMISSION TEMPERATURE SENSOR SIGNAL
36	-	-
37	T42 18DG/YL	TRS T42 SENSE
38	T16 18YL/OR	TRANSMISSION CONTROL RELAY OUTPUT

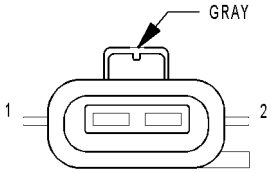

RADIATOR FAN NO. 1 (DIESEL)

RADIATOR FAN NO. 1 (DIESEL) - GRAY 2 WAY

CAV	CIRCUIT	FUNCTION
1	N201 12DB/LG	RADIATOR FAN RELAY NO. 1 OUTPUT
2	N202 12DB/OR	RADIATOR FAN NO. 1 CONTROL

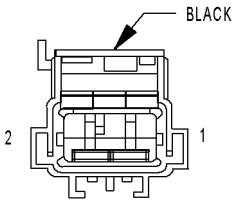

RADIATOR FAN NO. 1 (GAS)

RADIATOR FAN NO. 1 (GAS) - BLACK 2 WAY

CAV	CIRCUIT	FUNCTION
1	N23 12DB/DG	RADIATOR FAN RELAY OUTPUT
2	Z223 12BK/DG	GROUND

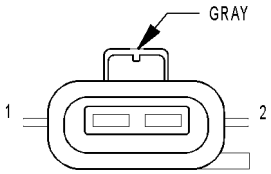

RADIATOR FAN NO. 2 (DIESEL)

RADIATOR FAN NO. 2 (DIESEL) - GRAY 2 WAY

CAV	CIRCUIT	FUNCTION
1	N112 12DB/OR	RADIATOR FAN RELAY NO. 2 AND NO. 3 COMMON OUTPUT
2	Z823 12BK/DG	GROUND

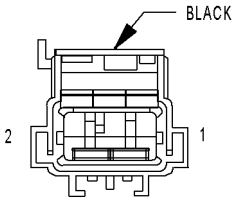

RADIATOR FAN NO. 2 (GAS)

RADIATOR FAN NO. 2 (GAS) - BLACK 2 WAY

CAV	CIRCUIT	FUNCTION
1	N23 12DB/DG	RADIATOR FAN RELAY OUTPUT
2	Z223 12BK/DG	GROUND

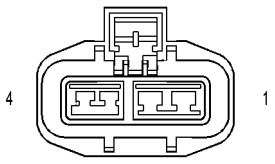

RADIATOR FAN RELAY (GAS)

RADIATOR FAN RELAY (GAS) - 4 WAY

CAV	CIRCUIT	FUNCTION
1	A112 12OR/RD	FUSED B(+)
2	N23 12DB/DG	RADIATOR FAN RELAY OUTPUT
3	Z723 18BK/DG	GROUND
4	N173 18DB/VT	RAD FAN RELAY CONTROL

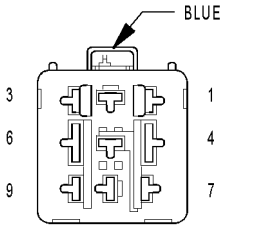

RADIATOR FAN RELAY NO. 1 (DIESEL)

RADIATOR FAN RELAY NO. 1 (DIESEL) - BLUE 9 WAY

CAV	CIRCUIT	FUNCTION
1	-	-
2	N201 12DB/LG	RADIATOR FAN RELAY NO. 1 OUTPUT
3	-	-
4	K342 16BR/WT	ECM/PCM RELAY OUTPUT
5	-	-
6	N210 18DB/DG	LOW SPEED RADIATOR FAN RELAY CONTROL
7	-	-
8	A201 12RD/LG	FUSED B(+)
9	-	-

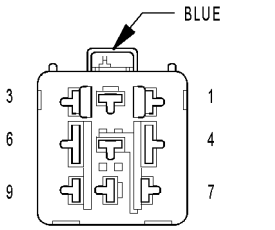

RADIATOR FAN RELAY NO. 2 (DIESEL)

RADIATOR FAN RELAY NO. 2 (DIESEL) - BLUE 9 WAY

CAV	CIRCUIT	FUNCTION
1	-	-
2	N112 12DB/OR	RADIATOR FAN RELAY NO. 2 AND NO. 3 COMMON OUTPUT
3	-	-
4	K342 16BR/WT	ECM/PCM RELAY OUTPUT
5	-	-
6	N122 18DB/YL	HIGH SPEED RADIATOR FAN DUAL RELAY CONTROL
7	-	-
8	A112 12OR/RD	FUSED B(+)
9	-	-

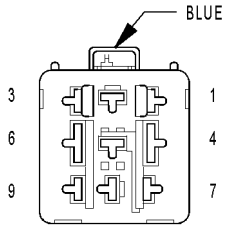

RADIATOR FAN RELAY NO. 3 (DIESEL)

RADIATOR FAN RELAY NO. 3 (DIESEL) - BLUE 9 WAY

CAV	CIRCUIT	FUNCTION
1	-	-
2	Z823 12BK/DG	GROUND
3	-	-
4	K342 16BR/WT	ECM/PCM RELAY OUTPUT
5	N112 12DB/OR	RADIATOR FAN RELAY NO. 2 AND NO. 3 COMMON OUTPUT
6	N122 18DB/YL	HIGH SPEED RADIATOR FAN DUAL RELAY CONTROL
7	-	-
8	N202 12DB/OR	RADIATOR FAN NO. 1 CONTROL
9	-	-

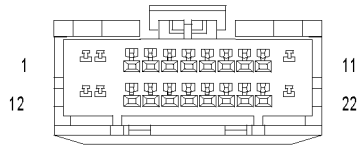

RADIO C1

RADIO C1 - 22 WAY

CAV	CIRCUIT	FUNCTION
1	A114 16GY/RD	FUSED B(+) (I.O.D.)
2	F306 18DB/PK	FUSED ACCESSORY RELAY OUTPUT
3	E14 20OR/TN	PANEL LAMPS DRIVER
4	-	-
5	-	-
6	-	-
7	X54 20GY (LOWLINE)	RIGHT FRONT SPEAKER (+)
8	X56 20GY/BR (LOWLINE)	RIGHT FRONT SPEAKER (-)
9	X55 20DG/BR (LOWLINE)	LEFT FRONT SPEAKER (-)
10	X53 20DG (LOWLINE)	LEFT FRONT SPEAKER (+)
11	Z514 16BK/LG	GROUND
12	A114 16GY/RD	FUSED B(+) (I.O.D.)
13	X60 20GY/YL (EXPORT)	RADIO 12 VOLT OUTPUT
14	D25 20WT/VT	PCI BUS
15	-	-
16	-	-
17	-	-
18	X51 22DG/DB	LEFT REAR SPEAKER (+)
19	X57 22DG/OR	LEFT REAR SPEAKER (-)
20	X58 22GY/OR	RIGHT REAR SPEAKER (-)
21	X52 22GY/DB	RIGHT REAR SPEAKER (+)
22	Z515 16BK	GROUND

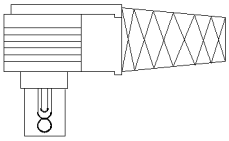

RADIO C2
(CD CHANGER)

RADIO C2 (CD CHANGER) - 10 WAY

CAV	CIRCUIT	FUNCTION
1	X40 22GY/WT (EXCEPT EXPORT)	AUDIO OUT RIGHT
1	X40 20GY/WT (EXPORT)	AUDIO OUT RIGHT
2	X140 22GY/OR (EXCEPT EXPORT)	COMMON AUDIO
2	Z140 18BK/OR (EXPORT)	GROUND
3	X235 20GY/LB (EXCEPT EXPORT)	SHIELD
4	D25 20WT/VT (EXCEPT EXPORT)	PCI BUS
4	D25 20VT/YL (EXPORT)	PCI BUS
5	X112 20DG/GY (EXCEPT EXPORT)	IGNITION SWITCH SIGNAL
5	X112 20RD (EXPORT)	IGNITION SWITCH SIGNAL
6	X41 22DG/WT (EXCEPT EXPORT)	AUDIO OUT LEFT
6	X41 20DG/WT (EXPORT)	AUDIO OUT LEFT
7	Z141 20BK/TN (EXCEPT EXPORT)	GROUND
7	Z141 18BK/TN (EXPORT)	GROUND
8	-	-
9	E14 22OR/TN (EXCEPT EXPORT)	PANEL LAMPS DRIVER
9	E14 18OR/TN (EXPORT)	PANEL LAMPS DRIVER
10	X160 20GY/YL	FUSED B(+)

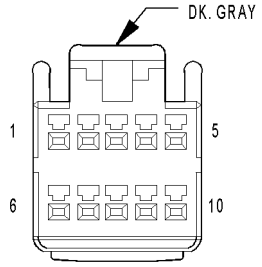

RADIO C2
(DVD/CD CHANGER)

RADIO C2 (DVD/CD CHANGER) - DK. GRAY 10 WAY

CAV	CIRCUIT	FUNCTION
1	X40 22GY/WT	AUDIO OUT RIGHT
2	X140 22GY/OR	COMMON AUDIO
3	X235 20GY/LB	SHIELD
4	D25 20WT/VT	PCI BUS
5	X112 20DG/GY	IGNITION SWITCH SIGNAL
6	X41 22DG/WT	AUDIO OUT LEFT
7	-	-
8	-	-
9	E14 22OR/TN	PANEL LAMPS DRIVER
10	-	-

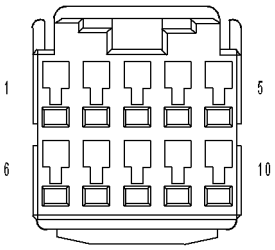

RADIO C2
(HANDS FREE)

RADIO C2 (HANDS FREE) - 10 WAY

CAV	CIRCUIT	FUNCTION
1	X704 22GY/WT	RIGHT AUDIO OUTPUT
2	X795 22GY/OR	AUDIO GROUND
3	X207 20GY/LB (CD CHANGER)	SHIELD
3	X955 22 (DVD/CD CHANGER)	SHIELD
4	D25 20WT/VT	PCI BUS
5	X112 20DG/GY	IGNITION RUN/ACC SIGNAL
6	X703 22DG/WT	LEFT AUDIO OUTPUT
7	Z141 20BK/TN	GROUND
8	-	-
9	E14 22OR/TN	PANEL LAMPS DRIVER
10	X160 20GY/YL	FUSED B(+)

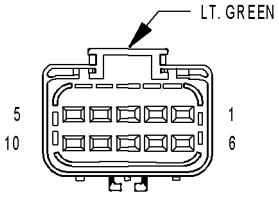

REAR A/C-HEATER UNIT (3 ZONE MTC)

REAR A/C-HEATER UNIT (3 ZONE MTC) - LT. GREEN 10 WAY

CAV	CIRCUIT	FUNCTION
1	C53 20LB	REAR MODE DOOR DRIVER
2	C154 20LB/OR	REAR COMMON DOOR DRIVER
3	C51 12LB/BR	FUSED REAR BLOWER MOTOR RELAY OUTPUT
4	C152 16LB/LG	REAR BLOWER MOTOR MED
5	C151 18LB/DG	REAR BLOWER MOTOR LOW
6	C153 12DB/BR	REAR BLOWER MOTOR HIGH
7	C54 20LB/YL	REAR BLEND DOOR DRIVER
8	C154 20LB/OR	REAR COMMON DOOR DRIVER
9	-	-
10	-	-

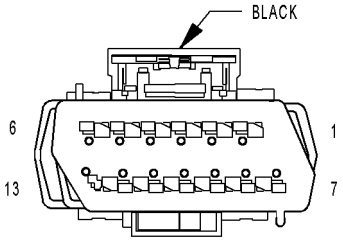

REAR AUTO TEMP CONTROL SWITCH (3 ZONE ATC)

REAR AUTO TEMP CONTROL SWITCH (3 ZONE ATC) - BLACK 13 WAY

CAV	CIRCUIT	FUNCTION
1	F504 20GY/PK	FUSED IGNITION SWITCH OUTPUT (RUN)
2	Z27 18BK/DG	GROUND
3	D22 22WT/TN	KDB CLOCK
4	D17 22WT/DG	KDB DATA
5	E10 20OR/DG	PANEL LAMPS DRIVER
6	-	-
7	-	-
8	-	-
9	-	-
10	-	-
11	-	-
12	-	-
13	-	-

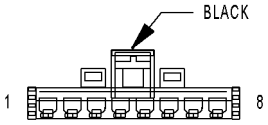

REAR BLOWER FRONT CONTROL SWITCH (3 ZONE MTC)

REAR BLOWER FRONT CONTROL SWITCH (3 ZONE MTC) - BLACK 8 WAY

CAV	CIRCUIT	FUNCTION
1	-	-
2	Z440 12BK/DG	GROUND
3	-	-
4	C153 12DB/BR	REAR BLOWER MOTOR HIGH
5	-	-
6	C152 16LB/LG	REAR BLOWER MOTOR MED
7	C151 18LB/DG	REAR BLOWER MOTOR LOW
8	C50 12DB/OR	REAR BLOWER FRONT CONTROL FEED

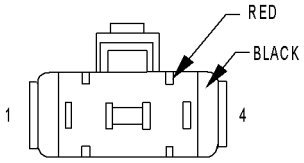

REAR BLOWER MOTOR POWER MODULE C1 (3 ZONE ATC)

REAR BLOWER MOTOR POWER MODULE C1 (3 ZONE ATC) - RED/BLACK 4 WAY

CAV	CIRCUIT	FUNCTION
1	C51 12DB/BR	FUSED REAR BLOWER MOTOR RELAY OUTPUT
2	C59 18DB/LB	BLOWER MOTOR CONTROL
3	Z135 12BK/LB	GROUND
4	-	-

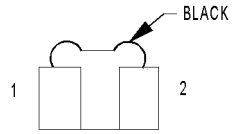

REAR BLOWER MOTOR POWER MODULE C2 (3 ZONE ATC)

REAR BLOWER MOTOR POWER MODULE C2 (3 ZONE ATC) - BLACK 2 WAY

CAV	CIRCUIT	FUNCTION
1	12BK	GROUND
2	12DG	POWER FEED

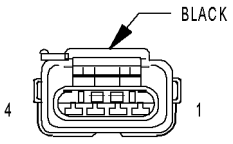

REAR BLOWER REAR CONTROL SWITCH C1 (3 ZONE MTC)

REAR BLOWER REAR CONTROL SWITCH C1 (3 ZONE MTC) - BLACK 4 WAY

CAV	CIRCUIT	FUNCTION
1	C153 12DB/BR	REAR BLOWER MOTOR HIGH
2	C152 16LB/LG	REAR BLOWER MOTOR MED
3	C151 18LB/DG	REAR BLOWER MOTOR LOW
4	C50 12DB/OR	REAR BLOWER FRONT CONTROL FEED

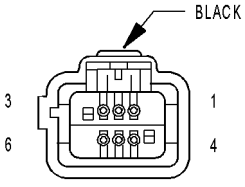

REAR BLOWER REAR CONTROL SWITCH C2 (3 ZONE MTC)

REAR BLOWER REAR CONTROL SWITCH C2 (3 ZONE MTC) - BLACK 6 WAY

CAV	CIRCUIT	FUNCTION
1	-	-
2	C22 20LB/DB	REAR TEMPERATURE FEEDBACK SIGNAL
3	E10 20OR/DG	PANEL LAMPS DRIVER
4	F850 20LB/PK	5 VOLT SUPPLY
5	C121 20DB/DG	REAR TEMPERATURE RETURN
6	Z409 20BK/OR	GROUND

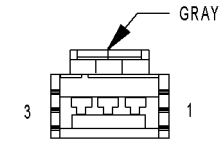

REAR DOME LAMP (EXCEPT LUXURY)

REAR DOME LAMP (EXCEPT LUXURY) - GRAY 3 WAY

CAV	CIRCUIT	FUNCTION
1	M22 20YL/OR	COURTESY LAMPS DRIVER
2	Z327 20BK/OR	GROUND
3	-	-

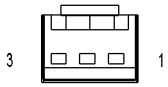

REAR INTRUSION SENSOR (UNITED KINGDOM)

REAR INTRUSION SENSOR (UNITED KINGDOM) - 3 WAY

CAV	CIRCUIT	FUNCTION
1	A645 20RD/VT	REAR INTRUSION SENSOR SIGNAL
2	-	-
3	G945 20VT/DG	SENSOR GROUND

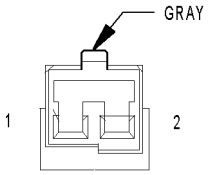

REAR MODE MOTOR (3 ZONE ATC)

REAR MODE MOTOR (3 ZONE ATC) - GRAY 2 WAY

CAV	CIRCUIT	FUNCTION
1	C154 18LB/GY	REAR MODE DOOR DRIVER (B)
2	C53 18LB	REAR MODE DOOR DRIVER (A)

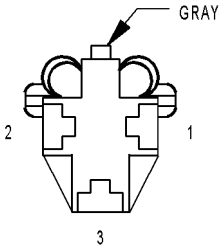

REAR POWER OUTLET

REAR POWER OUTLET - GRAY 3 WAY

CAV	CIRCUIT	FUNCTION
1	F307 18LB/PK (ACCESSORY RELAY POSITION)	FUSED ACCESSORY RELAY OUTPUT
1	F307 18LB/PK (BATTERY POSITION)	FUSED B(+)
2	-	-
3	Z737 18BK/LB	GROUND

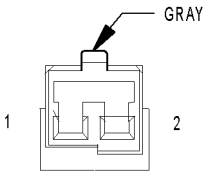

REAR TEMPERATURE MOTOR (3 ZONE ATC)

REAR TEMPERATURE MOTOR (3 ZONE ATC) - GRAY 2 WAY

CAV	CIRCUIT	FUNCTION
1	C54 18LB/YL	REAR BLEND DOOR DRIVER (A)
2	C169 18LB/TN	REAR BLEND DOOR DRIVER (B)

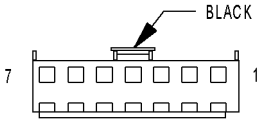

REAR VIEW MIRROR C1 (LUXURY)

REAR VIEW MIRROR C1 (LUXURY) - BLACK 7 WAY

CAV	CIRCUIT	FUNCTION
1	F503 20BK/PK (EXCEPT HANDS FREE)	FUSED IGNITION SWITCH OUTPUT (RUN)
1	X793 20DB (HANDS FREE)	IGNITION RUN/ACC SIGNAL
2	Z113 20BK (EXCEPT HANDS FREE)	GROUND
2	Z530 18GY/BK (HANDS FREE)	GROUND
3	L1 20BK/WT	BACK-UP LAMP FEED
4	P112 22BK/OR (EXCEPT HANDS FREE)	MIRROR B(+)
5	P114 22BK/LB (EXCEPT HANDS FREE)	MIRROR B(-)
6	-	-
7	L24 20BK/GY (EXCEPT HANDS FREE)	AUTOMATIC HEADLAMP SWITCH SENSOR

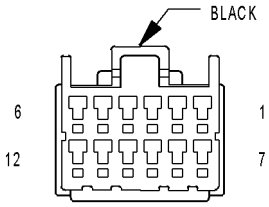

REAR VIEW MIRROR C2 (HANDS FREE)

REAR VIEW MIRROR C2 (HANDS FREE) - BLACK 12 WAY

CAV	CIRCUIT	FUNCTION
1	-	-
2	-	-
3	-	-
4	X722 20BK/LB	MICROPHONE 2 IN (+)
5	-	-
6	X712 20BK/GY	MICROPHONE 1 IN (+)
7	X793 20DB	IGNITION RUN/ACC SIGNAL
8	-	-
9	X730 20BK/VT	VOICE RECOGNITION/PHONE SWITCH SIGNAL
10	-	-
11	X835 20BK	SENSOR GROUND
12	X792 20BK/WT	MICROPHONE IN (-)

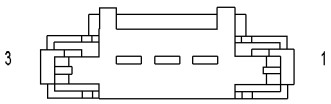

REAR WIPER MOTOR

REAR WIPER MOTOR - 3 WAY

CAV	CIRCUIT	FUNCTION
1	W13 18BR/LG	REAR WIPER MOTOR CONTROL
2	F302 18GY/PK	FUSED ACCESSORY RELAY OUTPUT
3	Z213 18BK/LG	GROUND

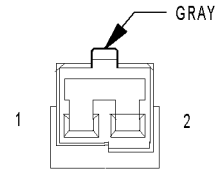

RECIRCULATION DOOR ACTUATOR

RECIRCULATION DOOR ACTUATOR - GRAY 2 WAY

CAV	CIRCUIT	FUNCTION
1	C132 20DB/YL (ATC)	RECIRCULATION DOOR DRIVER (B)
1	C34 20DB/LB (LHD)	COMMON DOOR DRIVER (B)
1	C32 20DB/TN (RHD)	RECIRCULATION DOOR DRIVER (A)
2	C32 20DB/TN (ATC)	RECIRCULATION DOOR DRIVER (A)
2	C32 20DB/TN (LHD)	RECIRCULATION DOOR DRIVER (A)
2	C34 20DB/LB (RHD)	COMMON DOOR DRIVER (B)

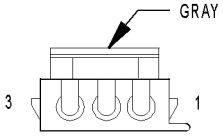

RIGHT B-PILLAR SWITCH (POWER SLIDING DOOR)

RIGHT B-PILLAR SWITCH (POWER SLIDING DOOR) - GRAY 3 WAY

CAV	CIRCUIT	FUNCTION
1	Z62 22BK/YL	GROUND
2	-	-
3	G42 22VT/YL	RIGHT SLIDING DOOR PILLAR SWITCH MUX

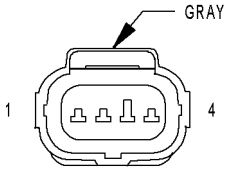

RIGHT CINCH/RELEASE MOTOR (POWER SLIDING DOOR)

RIGHT CINCH/RELEASE MOTOR (POWER SLIDING DOOR) - GRAY 4 WAY

CAV	CIRCUIT	FUNCTION
1	Q46 18TN/GY	RIGHT CINCH/RELEASE MOTOR LATCH DRIVER
2	Z248 18BK/WT	GROUND
3	Q44 18OR/GY	RIGHT CINCH/RELEASE MOTOR CLUTCH DRIVER
4	Q48 18TN/WT	RIGHT CINCH/RELEASE MOTOR UNLATCH DRIVER

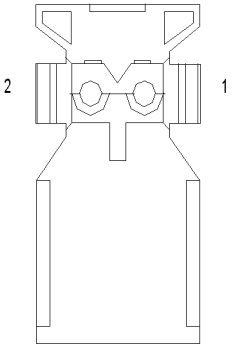

RIGHT CURTAIN AIRBAG SQUIB

RIGHT CURTAIN AIRBAG SQUIB - 2 WAY

CAV	CIRCUIT	FUNCTION
1	R2 20WT/LB	RIGHT CURTAIN SQUIB LINE 2
2	R4 20OR/LB	RIGHT CURTAIN SQUIB LINE 1

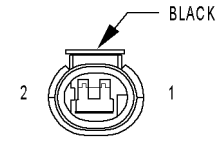

RIGHT CYLINDER LOCK SWITCH (EXPORT)

RIGHT CYLINDER LOCK SWITCH (EXPORT) - BLACK 2 WAY

CAV	CIRCUIT	FUNCTION
1	Z462 20BK/WT	GROUND
2	G162 20VT/WT	RIGHT CYLINDER LOCK SWITCH MUX

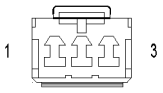

RIGHT DOOR SPEAKER

RIGHT DOOR SPEAKER - 3 WAY

CAV	CIRCUIT	FUNCTION
1	X292 18GY/BR (HIGHLINE)	AMPLIFIED RIGHT FRONT SPEAKER (-)
1	X56 20GY/BR (LOWLINE)	RIGHT FRONT SPEAKER (-)
2	-	-
3	X202 18GY (HIGHLINE)	AMPLIFIED RIGHT FRONT SPEAKER (+)
3	X54 20GY (LOWLINE)	RIGHT FRONT SPEAKER (+)

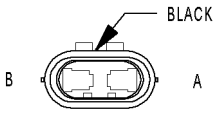

RIGHT FOG LAMP

RIGHT FOG LAMP - BLACK 2 WAY

CAV	CIRCUIT	FUNCTION
A	L90 18WT/OR	FRONT FOG LAMP RELAY OUTPUT
B	Z348 18BK/OR	GROUND

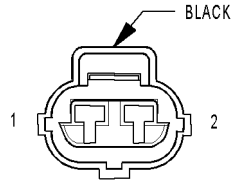

RIGHT FRONT DOOR AJAR SWITCH (BASE)

RIGHT FRONT DOOR AJAR SWITCH (BASE) - BLACK 2 WAY

CAV	CIRCUIT	FUNCTION
1	G74 20VT/WT	RIGHT FRONT DOOR AJAR SWITCH SENSE
2	Z74 20BK/WT	GROUND

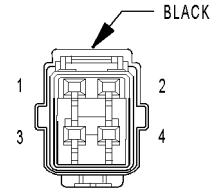

RIGHT FRONT DOOR LOCK MOTOR/AJAR SWITCH (EXCEPT BASE)

RIGHT FRONT DOOR LOCK MOTOR/AJAR SWITCH (EXCEPT BASE) - BLACK 4 WAY

CAV	CIRCUIT	FUNCTION
1	G74 20VT/WT	RIGHT FRONT DOOR AJAR SWITCH SENSE
2	Z74 20BK/WT	GROUND
3	P4 20TN/BR	RIGHT FRONT DOOR UNLOCK DRIVER
4	P2 20TN/GY	RIGHT FRONT DOOR LOCK DRIVER

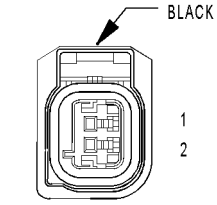

RIGHT FRONT IMPACT SENSOR

RIGHT FRONT IMPACT SENSOR - BLACK 2 WAY

CAV	CIRCUIT	FUNCTION
1	R82 18WT/LB	RIGHT FRONT IMPACT SENSOR GROUND
2	R80 18VT/LB	RIGHT FRONT IMPACT SENSOR SIGNAL

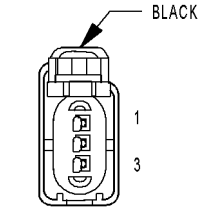

RIGHT FRONT PARK/TURN SIGNAL LAMP

RIGHT FRONT PARK/TURN SIGNAL LAMP - BLACK 3 WAY

CAV	CIRCUIT	FUNCTION
1	L60 18WT/TN	RIGHT FRONT TURN SIGNAL DRIVER
2	L78 18WT/OR	FUSED PARK LAMP RELAY OUTPUT (RIGHT)
3	Z378 18BK/TN	GROUND

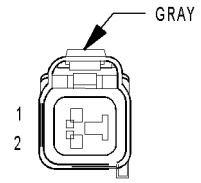

RIGHT FRONT WHEEL SPEED SENSOR

RIGHT FRONT WHEEL SPEED SENSOR - GRAY 2 WAY

CAV	CIRCUIT	FUNCTION
1	B7 18DG/VT	RIGHT FRONT WHEEL SPEED SENSOR 12 VOLT SUPPLY
2	B6 18DG/WT	RIGHT FRONT WHEEL SPEED SENSOR SIGNAL

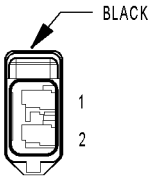

RIGHT FULL OPEN SWITCH (POWER SLIDING DOOR)

RIGHT FULL OPEN SWITCH (POWER SLIDING DOOR) - BLACK 2 WAY

CAV	CIRCUIT	FUNCTION
1	Q52 20OR	RIGHT FULL OPEN SWITCH SENSE
2	Z76 20BK/YL	GROUND

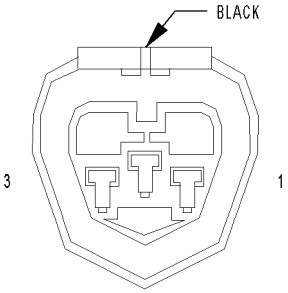

RIGHT HEADLAMP (CARAVAN/VOYAGER EXCEPT EXPORT)

RIGHT HEADLAMP (CARAVAN/VOYAGER EXCEPT EXPORT) - BLACK 3 WAY

CAV	CIRCUIT	FUNCTION
1	L44 16WT/TN	RIGHT LOW BEAM DRIVER
2	Z344 16BK/TN	GROUND
3	L34 16WT/GY	RIGHT HIGH BEAM DRIVER

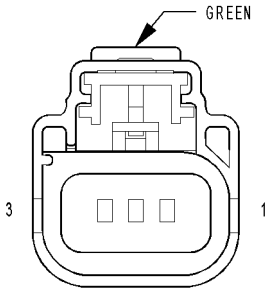

RIGHT HEADLAMP (TOWN AND COUNTRY)

RIGHT HEADLAMP (TOWN AND COUNTRY) - GREEN 3 WAY

CAV	CIRCUIT	FUNCTION
1	L44 16WT/TN	RIGHT LOW BEAM DRIVER
2	Z344 16BK/TN	GROUND
3	L34 16WT/GY	RIGHT HIGH BEAM DRIVER

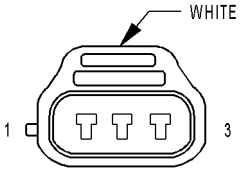

RIGHT HEADLAMP LEVELING MOTOR (EXPORT)

RIGHT HEADLAMP LEVELING MOTOR (EXPORT) - WHITE 3 WAY

CAV	CIRCUIT	FUNCTION
1	Z203 16BR	GROUND
2	L78 16BK	FUSED PARK LAMP RELAY OUTPUT (RIGHT)
3	L13 16RD	HEADLAMP ADJUST SIGNAL

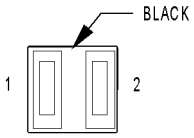

RIGHT HIGH BEAM LAMP (EXPORT)

RIGHT HIGH BEAM LAMP (EXPORT) - BLACK 2 WAY

CAV	CIRCUIT	FUNCTION
1	Z344 16BR	GROUND
1	Z344 16BR	GROUND
2	L34 16GY	RIGHT HIGH BEAM DRIVER

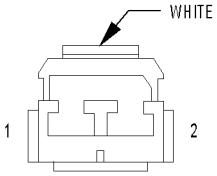

RIGHT INSTRUMENT PANEL SPEAKER

RIGHT INSTRUMENT PANEL SPEAKER - WHITE 2 WAY

CAV	CIRCUIT	FUNCTION
1	X154 20GY/YL (EXPORT/LOWLINE)	RIGHT INSTRUMENT PANEL SPEAKER (+)
1	X154 18GY/YL (HIGHLINE EXCEPT EXPORT)	RIGHT INSTRUMENT PANEL SPEAKER (+)
2	X156 20GY/LB (EXPORT/LOWLINE)	RIGHT INSTRUMENT PANEL SPEAKER (-)
2	X156 18GY/LB (HIGHLINE EXCEPT EXPORT)	RIGHT INSTRUMENT PANEL SPEAKER (-)

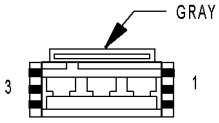

RIGHT LIFTGATE FLOOD LAMP

RIGHT LIFTGATE FLOOD LAMP - GRAY 3 WAY

CAV	CIRCUIT	FUNCTION
1	Z312 20BK/YL	GROUND
2	-	-
3	M11 20YL/VT	COURTESY LAMPS DRIVER
3	M11 20YL/VT (EXPORT POWER LIFT-GATE)	COURTESY LAMPS DRIVER

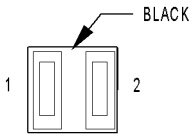

RIGHT LOW BEAM LAMP (EXPORT)

RIGHT LOW BEAM LAMP (EXPORT) - BLACK 2 WAY

CAV	CIRCUIT	FUNCTION
1	Z344 16BR	GROUND
2	L44 16WT	RIGHT LOW BEAM DRIVER

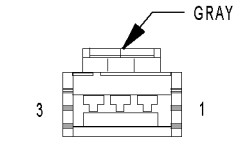

RIGHT MID READING LAMP (PREMIUM/LUXURY)

RIGHT MID READING LAMP (PREMIUM/LUXURY) - GRAY 3 WAY

CAV	CIRCUIT	FUNCTION
1	M22 20YL/OR	COURTESY LAMPS DRIVER
2	Z327 20BK/OR	GROUND
3	M27 20YL/LB	READING LAMPS DRIVER

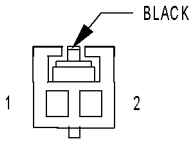

RIGHT PARK LAMP (EXPORT)

RIGHT PARK LAMP (EXPORT) - BLACK 2 WAY

CAV	CIRCUIT	FUNCTION
1	Z344 16BR	GROUND
2	L78 16BK	FUSED PARK LAMP RELAY OUTPUT (RIGHT)

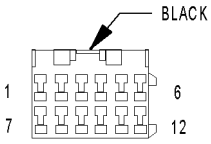

RIGHT POWER MIRROR

RIGHT POWER MIRROR - BLACK 12 WAY

CAV	CIRCUIT	FUNCTION
1	P174 20TN/LB (EXPORT)	RIGHT FOLDING MIRROR UNFOLD DRIVER
2	-	-
3	-	-
4	P68 20TN/YL (MEMORY)	RIGHT MIRROR HORIZONTAL POSITION SIGNAL
5	P66 20TN/LG (MEMORY)	RIGHT MIRROR SENSOR GROUND
6	P67 20TN/OR (MEMORY)	RIGHT MIRROR VERTICAL POSITION SIGNAL
7	P160 20TN/LG (LHD EXPORT)	PASSENGER FOLDING MIRROR RELAY OUTPUT
7	P159 20TN/DG (RHD)	DRIVER FOLDING MIRROR FOLD DRIVER
8	Z216 20BK/DB	GROUND
9	C16 20DB/GY (HEATED MIRRORS)	FUSED DEFOGGER RELAY OUTPUT
10	P70 20TN/LB	RIGHT MIRROR COMMON DRIVER (RIGHT/DOWN)
11	P72 20TN/GY	RIGHT MIRROR UP DRIVER
12	P74 20TN/DB	RIGHT MIRROR LEFT DRIVER

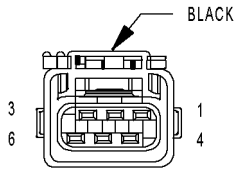

RIGHT REAR LAMP ASSEMBLY

RIGHT REAR LAMP ASSEMBLY - BLACK 6 WAY

CAV	CIRCUIT	FUNCTION
1	L62 18WT/BR (EXCEPT EXPORT)	RIGHT REAR TURN SIGNAL DRIVER
1	Z362 18BK/BR (EXPORT)	GROUND
2	L62 18WT/BR (EXPORT)	RIGHT REAR TURN SIGNAL DRIVER
3	L50 18WT/TN (DIESEL)	PRIMARY BRAKE SWITCH SIGNAL
3	L78 18WT/OR (EXCEPT EXPORT/EXCEPT TRAILER TOW)	FUSED PARK LAMP RELAY OUTPUT (RIGHT)
3	L50 18WT/TN (GAS EXPORT)	BRAKE LAMP SWITCH OUTPUT
3	L78 18WT/TN (TRAILER TOW)	FUSED PARK LAMP RELAY OUTPUT (RIGHT)
4	L1 18WT/LG (EXCEPT TRAILER TOW)	BACK-UP LAMP FEED
4	L1 18 WT/PK (TRAILER TOW)	BACK-UP LAMP FEED
5	Z362 18BK/BR (EXCEPT EXPORT/EXCEPT TRAILER TOW)	GROUND
5	L38 20WT/YL (EXPORT)	REAR FOG LAMP SWITCH OUTPUT
5	Z362 18BR/OR (TRAILER TOW)	GROUND
6	L78 18WT/OR (EXPORT)	FUSED PARK LAMP RELAY OUTPUT (RIGHT)

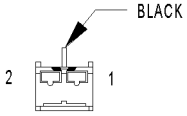

RIGHT REAR PILLAR SPEAKER (HIGHLINE AUDIO)

RIGHT REAR PILLAR SPEAKER (HIGHLINE AUDIO) - BLACK 2 WAY

CAV	CIRCUIT	FUNCTION
1	X212 18GY/DB (EXCEPT EXPORT)	AMPLIFIED RIGHT REAR TWEETER (-)
1	X212 20GY/DB (EXPORT)	AMPLIFIED RIGHT REAR TWEETER (-)
2	X282 18GY/TN (EXCEPT EXPORT)	AMPLIFIED RIGHT REAR TWEETER (+)
2	X282 20GY/TN (EXPORT)	AMPLIFIED RIGHT REAR TWEETER (+)

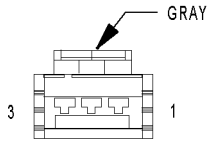

RIGHT REAR READING LAMP (LUXURY)

RIGHT REAR READING LAMP (LUXURY) - GRAY 3 WAY

CAV	CIRCUIT	FUNCTION
1	M22 20YL/OR	COURTESY LAMPS DRIVER
2	Z327 20BK/OR	GROUND
3	M27 20YL/LB	READING LAMPS DRIVER

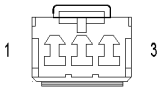

RIGHT REAR SPEAKER

RIGHT REAR SPEAKER - 3 WAY

CAV	CIRCUIT	FUNCTION
1	X296 18DG/GY (HIGHLINE EXCEPT EXPORT)	AMPLIFIED RIGHT REAR SPEAKER (-)
1	X296 20DG/GY (HIGHLINE EXPORT)	AMPLIFIED RIGHT REAR SPEAKER (-)
1	X58 20GY/OR (LOWLINE)	RIGHT REAR SPEAKER (-)
2	-	-
3	X206 18GY/DB (HIGHLINE EXCEPT EXPORT	AMPLIFIED RIGHT REAR SPEAKER (+)
3	X206 20GY/DB (HIGHLINE EXPORT)	AMPLIFIED RIGHT REAR SPEAKER (+)
3	X52 20GY/DB (LOWLINE)	RIGHT REAR SPEAKER (+)

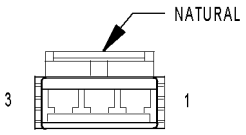

RIGHT REAR VENT MOTOR

RIGHT REAR VENT MOTOR - NATURAL 3 WAY

CAV	CIRCUIT	FUNCTION
1	-	-
2	Q14 16OR/BR (LHD)	PASSENGER SIDE REAR WINDOW CLOSE
2	Q13 16OR/DB (RHD)	DRIVER SIDE REAR WINDOW CLOSE
3	Q24 16OR/DG (LHD)	PASSENGER SIDE REAR WINDOW OPEN
3	Q23 16OR/LB (RHD)	DRIVER SIDE REAR WINDOW OPEN

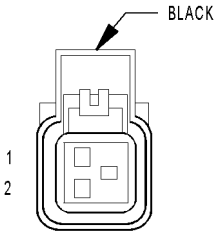

RIGHT REAR WHEEL SPEED SENSOR

RIGHT REAR WHEEL SPEED SENSOR - BLACK 2 WAY

CAV	CIRCUIT	FUNCTION
1	B2 18DG/LB	RIGHT REAR WHEEL SPEED SENSOR 12 VOLT SUPPLY
2	B1 18DG/OR	RIGHT REAR WHEEL SPEED SENSOR SIGNAL

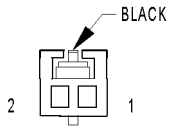

RIGHT REMOTE RADIO SWITCH

RIGHT REMOTE RADIO SWITCH - BLACK 2 WAY

CAV	CIRCUIT	FUNCTION
1	X10 22RD/DB	RADIO CONTROL MUX
2	X20 22RD/BK	RADIO CONTROL MUX RETURN

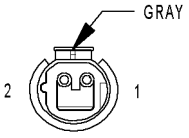

RIGHT REPEATER LAMP (EXPORT)

RIGHT REPEATER LAMP (EXPORT) - GRAY 2 WAY

CAV	CIRCUIT	FUNCTION
1	A701 18BR/RD	FUSED B(+) (HAZARD)
2	L162 20WT/VT	RIGHT SIDE REPEATER LAMP FEED

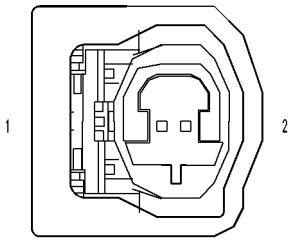

RIGHT SIDE IMPACT SENSOR 1 (EXCEPT EXPORT)

RIGHT SIDE IMPACT SENSOR 1 (EXCEPT EXPORT) - 2 WAY

CAV	CIRCUIT	FUNCTION
1	R16 20BR/LG	RIGHT SIDE IMPACT SENSOR 1 GROUND
2	R14 20TN/LG	RIGHT SIDE IMPACT SENSOR 1 SIGNAL

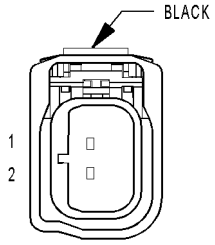

RIGHT SIDE IMPACT SENSOR 1 (EXPORT)

RIGHT SIDE IMPACT SENSOR 1 (EXPORT) - BLACK 2 WAY

CAV	CIRCUIT	FUNCTION
1	R16 20BR/LG	RIGHT SIDE IMPACT SENSOR 1 GROUND
2	R14 20TN/LG	RIGHT SIDE IMPACT SENSOR 1 SIGNAL

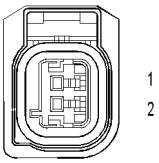

RIGHT SIDE IMPACT SENSOR 2

RIGHT SIDE IMPACT SENSOR 2 - 2 WAY

CAV	CIRCUIT	FUNCTION
1	R20 18WT/LG	RIGHT SIDE IMPACT SENSOR 2 GROUND
2	R18 18LB	RIGHT SIDE IMPACT SENSOR 2 SIGNAL

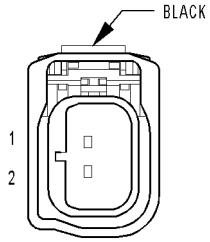

RIGHT SIDE IMPACT SENSOR 3

RIGHT SIDE IMPACT SENSOR 3 - BLACK 2 WAY

CAV	CIRCUIT	FUNCTION
1	R24 20YL/LB	RIGHT SIDE IMPACT SENSOR 3 GROUND
2	R22 20WT/LB	RIGHT SIDE IMPACT SENSOR 3 SIGNAL

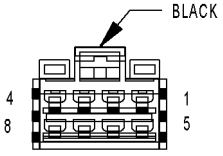

RIGHT SLIDING DOOR CONTROL MODULE C1 (POWER SLIDING DOOR)

RIGHT SLIDING DOOR CONTROL MODULE C1 (POWER SLIDING DOOR) - BLACK 8 WAY

CAV	CIRCUIT	FUNCTION
1	Q44 18OR/GY	RIGHT CINCH/RELEASE MOTOR CLUTCH DRIVER
2	Q68 16TN/BR	RIGHT SLIDING DOOR OPEN DRIVER
3	Q70 16TN/OR	RIGHT SLIDING DOOR CLOSE DRIVER
4	-	-
5	A113 14WT/RD	FUSED B(+)
6	-	-
7	-	-
8	Z124 14BK	GROUND

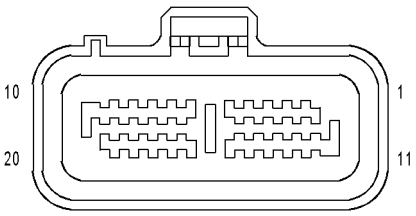

RIGHT SLIDING DOOR CONTROL MODULE C2 (POWER SLIDING DOOR)

RIGHT SLIDING DOOR CONTROL MODULE C2 (POWER SLIDING DOOR) - 20 WAY

CAV	CIRCUIT	FUNCTION
1	Q72 20TN/VT	RIGHT DOOR MOTOR HALL EFFECT SUPPLY
2	-	-
3	Q34 20OR/GY	RIGHT DOOR LOCK SENSE
4	Q54 20OR/BR	RIGHT DOOR IN/OUT HANDLE SWITCH SENSE
5	-	-
6	-	-
7	Q64 18OR/TN	RIGHT DOOR MOTOR CLUTCH DRIVER
8	Q46 18TN/GY	RIGHT CINCH/RELEASE MOTOR LATCH DRIVER
9	Q48 18TN/WT	RIGHT CINCH/RELEASE MOTOR UNLATCH DRIVER
10	-	-
11	D25 20WT/VT	PCI BUS
12	G76 20TN/OR	RIGHT SLIDING DOOR AJAR SWITCH SENSE
13	Q58 20OR/YL	RIGHT PAWL SWITCH SENSE
14	Q52 20OR	RIGHT FULL OPEN SWITCH SENSE
15	-	GROUND-DRIVER SIDE IDENTIFIER (LHD/RHD)
16	-	-
17	Q74 20TN/YL	RIGHT DOOR MOTOR HALL EFFECT SIGNAL
18	-	-
19	G152 20VT/GY	RIGHT SLIDING DOOR WAKE UP SIGNAL
20	Z26 20BK/TN	GROUND

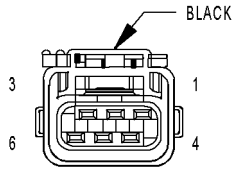

RIGHT SLIDING DOOR LATCH SENSING SWITCH (POWER SLIDING DOOR)

RIGHT SLIDING DOOR LATCH SENSING SWITCH (POWER SLIDING DOOR) - BLACK 6 WAY

CAV	CIRCUIT	FUNCTION
1	Z76 20BK/YL	GROUND
2	Q58 20OR/YL	RIGHT PAWL SWITCH SENSE
3	G76 20TN/OR	RIGHT SLIDING DOOR AJAR SWITCH SENSE
4	Z76 20BK/YL	GROUND
5	Q54 20OR/BR	RIGHT DOOR IN/OUT HANDLE SWITCH SENSE
6	-	-

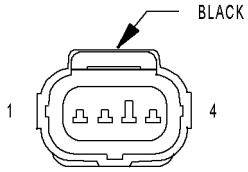

RIGHT SLIDING DOOR LOCK MOTOR (POWER SLIDING DOOR)

RIGHT SLIDING DOOR LOCK MOTOR (POWER SLIDING DOOR) - BLACK 4 WAY

CAV	CIRCUIT	FUNCTION
1	P38 20TN/DB	RIGHT SLIDING DOOR LOCK DRIVER
2	P34 20TN/LB	RIGHT SLIDING DOOR UNLOCK DRIVER
3	Q34 20OR/GY	RIGHT DOOR LOCK SENSE
4	Z76 20BK/YL	GROUND

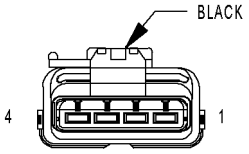

RIGHT SLIDING DOOR LOCK MOTOR/AJAR SWITCH (MANUAL SLIDING DOOR)

RIGHT SLIDING DOOR LOCK MOTOR/AJAR SWITCH (MANUAL SLIDING DOOR) - BLACK 4 WAY

CAV	CIRCUIT	FUNCTION
1	P38 20BK/DB	RIGHT SLIDING DOOR LOCK DRIVER
2	P34 20BK/TN	RIGHT SLIDING DOOR UNLOCK DRIVER
3	G76 20BK/DG	RIGHT SLIDING DOOR AJAR SWITCH SENSE
4	Z76 20BK	GROUND

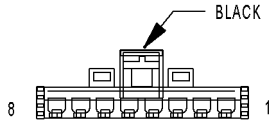

RIGHT SLIDING DOOR MOTOR (POWER SLIDING DOOR)

RIGHT SLIDING DOOR MOTOR (POWER SLIDING DOOR) - BLACK 8 WAY

CAV	CIRCUIT	FUNCTION
1	-	-
2	Q72 20TN/VT	RIGHT DOOR MOTOR HALL EFFECT SUPPLY
3	Q68 16TN/BR	RIGHT SLIDING DOOR OPEN DRIVER
4	Z164 18BK/TN	GROUND
5	Q64 18OR/TN	RIGHT DOOR MOTOR CLUTCH DRIVER
6	Q70 16TN/OR	RIGHT SLIDING DOOR CLOSE DRIVER
7	Z34 20BK/TN	GROUND
8	Q74 20TN/YL	RIGHT DOOR MOTOR HALL EFFECT SIGNAL

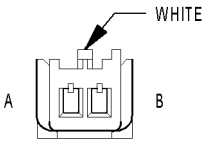

RIGHT SPEED CONTROL SWITCH

RIGHT SPEED CONTROL SWITCH - WHITE 2 WAY

CAV	CIRCUIT	FUNCTION
A	V37 20VT (DIESEL)	SPEED CONTROL SWITCH SIGNAL
A	V37 20VT (GAS)	S/C SWITCH NO. 1 SIGNAL
B	Z23 20BK/VT	RIGHT SPEED CONTROL SWITCH GROUND

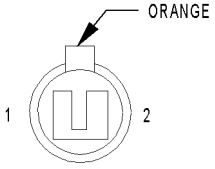

RIGHT TURN SIGNAL LAMP (EXPORT)

RIGHT TURN SIGNAL LAMP (EXPORT) - ORANGE 2 WAY

CAV	CIRCUIT	FUNCTION
1	Z344 16BR	GROUND
2	L60 16YL	RIGHT FRONT TURN SIGNAL DRIVER

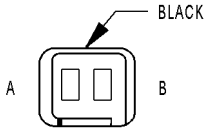

RIGHT VISOR/VANITY LAMP (EXCEPT BASE/EXPORT)

RIGHT VISOR/VANITY LAMP (EXCEPT BASE/EXPORT) - BLACK 2 WAY

CAV	CIRCUIT	FUNCTION
A	Z327 20BK/OR	GROUND
B	M27 20YL/LB	READING LAMPS DRIVER

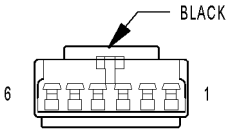

SENTRY KEY REMOTE ENTRY MODULE (SKREEM)

SENTRY KEY REMOTE ENTRY MODULE (SKREEM) - BLACK 6 WAY

CAV	CIRCUIT	FUNCTION
1	-	-
2	D25 20WT/VT	PCI BUS
3	-	-
4	F20 20PK/WT	FUSED IGNITION SWITCH OUTPUT (RUN-START)
5	Z120 22BK/WT	GROUND
6	A114 20GY/RD	FUSED B(+) (I.O.D.)

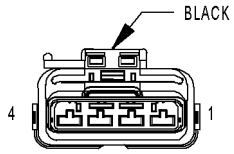

SIREN (UNITED KINGDOM)

SIREN (UNITED KINGDOM) - BLACK 4 WAY

CAV	CIRCUIT	FUNCTION
1	-	-
2	D96 18WT/LB	SIREN SIGNAL CONTROL
3	A114 18GY/RD	FUSED B(+) (I.O.D.)
4	Z109 18BK/GY	GROUND

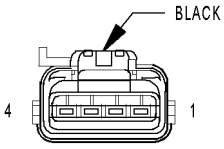

SPEED CONTROL SERVO (GAS)

SPEED CONTROL SERVO (GAS) - BLACK 4 WAY

CAV	CIRCUIT	FUNCTION
1	V36 18VT/YL	S/C VACUUM CONTROL
2	V35 18VT/OR	S/C VENT CONTROL
3	V30 20VT/WT	S/C BRAKE SWITCH OUTPUT
4	Z155 18BK/LG	GROUND

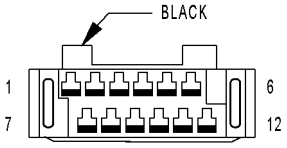

SUNROOF MODULE (EXCEPT EXPORT)

SUNROOF MODULE (EXCEPT EXPORT) - BLACK 12 WAY

CAV	CIRCUIT	FUNCTION
1	Q3 20OR/TN	SUNROOF OPEN
2	Q5 20OR/LB	SUNROOF CLOSE
3	Q4 20OR/YL	SUNROOF VENT
4	F302 18GY/PK	FUSED ACCESSORY RELAY OUTPUT
5	A115 14YL/RD	FUSED B(+)
6	Z138 14BK/DB	GROUND
7	-	-
8	-	-
9	-	-
10	-	-
11	-	-
12	-	-

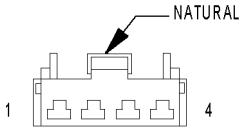

SUNROOF SWITCH (EXCEPT EXPORT)

SUNROOF SWITCH (EXCEPT EXPORT) - NATURAL 4 WAY

CAV	CIRCUIT	FUNCTION
1	Q3 20OR/TN	SUNROOF OPEN
2	Q4 20OR/YL	SUNROOF VENT
3	Z137 20BK/DB	GROUND
4	Q5 20OR/LB	SUNROOF CLOSE

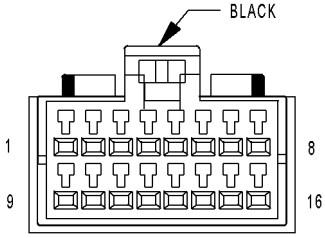

THATCHAM ALARM MODULE (UNITED KINGDOM)

THATCHAM ALARM MODULE (UNITED KINGDOM) - BLACK 16 WAY

CAV	CIRCUIT	FUNCTION
1	A645 20RD/VT	REAR INTRUSION SENSOR SIGNAL
2	G460 20DG/VT	FRONT INTRUSION SENSOR SIGNAL
3	G22 20YL	VTSS INDICATOR SUPPLY
4	D23 20WT/BR	FLASH PROGRAM ENABLE
5	-	-
6	D96 20WT/LB	SIREN SIGNAL CONTROL
7	F20 20PK/WT	FUSED IGNITION SWITCH OUTPUT (RUN-START)
8	Z109 20BK/GY	GROUND
9	G945 20VT/DG	SENSOR GROUND
10	G946 20LG/VT	SENSOR GROUND
11	G922 20GY	VTSS INDICATOR DRIVER
12	-	-
13	D25 20WT/VT	PCI BUS
14	-	-
15	L91 20WT/DB	HAZARD SWITCH SENSE
16	A114 18GY/RD	FUSED B(+) (I.O.D.)

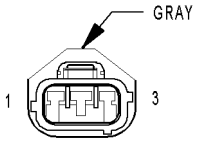

THROTTLE POSITION SENSOR (GAS)

THROTTLE POSITION SENSOR (GAS) - GRAY 3 WAY

CAV	CIRCUIT	FUNCTION
1	K900 18DB/DG	SENSOR GROUND
2	K22 18BR/OR	TP SIGNAL
3	F855 20PK/YL	5 VOLT SUPPLY

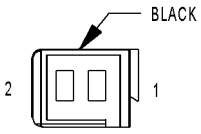

TRACTION CONTROL SWITCH

TRACTION CONTROL SWITCH - BLACK 2 WAY

CAV	CIRCUIT	FUNCTION
1	B27 20DG/WT	TRACTION CONTROL SWITCH SENSE
2	Z427 20BK/WT	GROUND

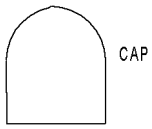

TRAILER TOW CONNECTOR (EXCEPT EXPORT)

TRAILER TOW CONNECTOR (EXCEPT EXPORT) - 4 WAY

CAV	CIRCUIT	FUNCTION
1	L62 18LG	RIGHT REAR TURN SIGNAL DRIVER
2	Z362 18WT	GROUND
3	L77 18BR	FUSED PARK LAMP RELAY OUTPUT (LEFT)
4	L63 18YL	LEFT REAR TURN SIGNAL DRIVER

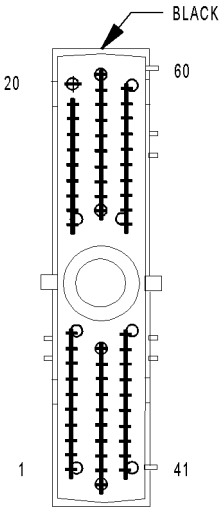

TRANSMISSION CONTROL MODULE (DIESEL)

TRANSMISSION CONTROL MODULE (DIESEL) - BLACK

CAV	CIRCUIT	FUNCTION
1	T1 18DG/LB	TRS T1 SENSE
2	-	-
3	T3 18DG/DB	TRS T3 SENSE
4	-	-
5	-	-
6	K24 20BR/LB	CRANKSHAFT POSITION SENSOR SIGNAL NO.2
7	D15 20DG/YL	SCI TRANSMIT (TCM)
8	T751 20YL	FUSED IGNITION SWITCH OUTPUT (START)
9	T9 18DG/TN	OVERDRIVE PRESSURE SWITCH SENSE
10	T10 20DG/LG	TORQUE MANAGEMENT REQUEST SENSE
11	F1 18PK/WT	FCM OUTPUT (UNLOCK-RUN-START)
12	K23 20BR/OR	ACCELERATOR PEDAL POSITION SENSOR SIGNAL NO.2
13	T13 18DG/VT	SPEED SENSOR GROUND
14	T14 18DG/BR	OUTPUT SPEED SENSOR SIGNAL
15	T15 18YL/BR	TRANSMISSION CONTROL RELAY CONTROL
16	T16 18YL/OR	TRANSMISSION CONTROL RELAY OUTPUT
17	T16 18YL/OR	TRANSMISSION CONTROL RELAY OUTPUT
18	-	-
19	T19 18YL/DB	2-4 SOLENOID CONTROL
20	T20 18DG/WT	L/R SOLENOID CONTROL
21	-	-
22	-	-

TRANSMISSION CONTROL MODULE (DIESEL) - BLACK

CAV	CIRCUIT	FUNCTION
23	-	-
24	-	-
25	-	-
26	-	-
27	-	-
28	-	-
29	-	-
30	-	-
31	-	-
32	-	-
33	-	-
34	-	-
35	-	-
36	-	-
37	-	-
38	-	-
39	-	-
40	-	-
41	T41 18DG/GY	TRS T41 SENSE
42	T42 18DG/YL	TRS T42 SENSE
43	D25 18WT/VT	PCI BUS
44	-	
45	-	
46	D123 20WT/OR	SCI RECIEVE (TCM)
47	T47 18YL/DG	2-4 PRESSURE SWITCH SENSE
48	-	-
49	-	-
50	T50 18YL/TN	LOW/REVERSE PRESSURE SWITCH SENSE
51	K900 20DB/DG	SENSOR GROUND
52	T52 18DG/WT	INPUT SPEED SENSOR SIGNAL
53	Z132 16BK/YL	GROUND
54	T54 18DG/OR	TRANSMISSION TEMPERATURE SENSOR SIGNAL
55	-	-
56	A104 18YL/RD	FUSED B(+)
57	Z133 16BK/LG	GROUND
58	N7 20DB/OR	VEHICLE SPEED SENSOR SIGNAL
59	T59 18YL/LB	UNDERDRIVE SOLENOID CONTROL
60	T60 18YL/GY	OVERDRIVE SOLENOID CONTROL

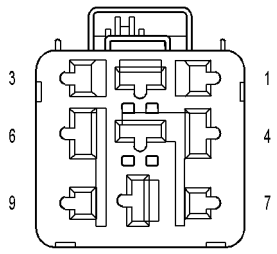

TRANSMISSION CONTROL RELAY (DIESEL)

TRANSMISSION CONTROL RELAY (DIESEL) - 9 WAY

CAV	CIRCUIT	FUNCTION
1	-	-
2	T16 18YL/OR	TRANSMISSION CONTROL RELAY OUTPUT
3	-	-
4	T15 18YL/BR	TRANSMISSION CONTROL RELAY CONTROL
5	-	-
6	Z115 18BK/OR	GROUND
7	-	-
8	A104 18YL/RD	FUSED B(+)
9	-	-

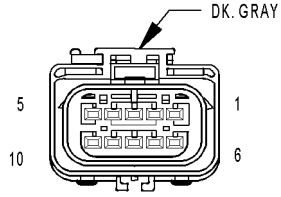

TRANSMISSION RANGE SENSOR

TRANSMISSION RANGE SENSOR - DK. GRAY 10 WAY

CAV	CIRCUIT	FUNCTION
1	-	-
2	-	-
3	T13 18DG/VT	SPEED SENSOR GROUND
4	T54 18DG/OR	TRANSMISSION TEMPERATURE SENSOR SIGNAL
5	T41 18DG/GY (DIESEL)	TRS T41 SENSE
6	-	-
7	T1 18DG/LB	TRS T1 SENSE
8	T3 18DG/DB	TRS T3 SENSE
9	T42 18DG/YL	TRS T42 SENSE
10	T41 20DG/GY (DIESEL)	TRS T41 SENSE
10	T41 18DG/GY (GAS)	TRS T41 SENSE

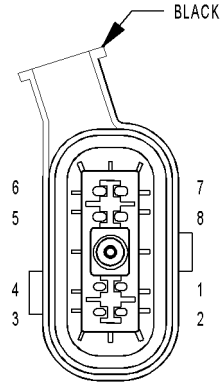

TRANSMISSION SOLENOID/PRESSURE SWITCH ASSEMBLY

TRANSMISSION SOLENOID/PRESSURE SWITCH ASSEMBLY - BLACK 8 WAY

CAV	CIRCUIT	FUNCTION
1	T47 18YL/DG	2-4 PRESSURE SWITCH SENSE
2	T50 18YL/TN	LOW/REVERSE PRESSURE SWITCH SENSE
3	T9 18DG/TN	OVERDRIVE PRESSURE SWITCH SENSE
4	T16 18YL/OR	TRANSMISSION CONTROL RELAY OUTPUT
5	T59 18DB/LB	UNDERDRIVE SOLENOID CONTROL
6	T60 18YL/GY	OVERDRIVE SOLENOID CONTROL
7	T20 18DG/WT	LOW/REVERSE SOLENOID CONTROL
8	T19 18YL/DB	2-4 SOLENOID CONTROL

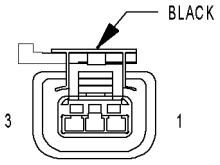

VEHICLE SPEED SENSOR (MTX)

VEHICLE SPEED SENSOR (MTX) - BLACK 3 WAY

CAV	CIRCUIT	FUNCTION
1	F855 20PK/YL (2.4L)	5 VOLT SUPPLY
1	F202 18PK/GY (DIESEL)	FUSED IGNITION SWITCH OUTPUT (RUN-START)
2	K900 18DB/DG (2.4L)	SENSOR GROUND
2	K900 20DB/DG (DIESEL)	SENSOR GROUND
3	N7 18DB/OR (2.4L)	VEHICLE SPEED SIGNAL
3	N7 20DB/OR (DIESEL)	VEHICLE SPEED SENSOR SIGNAL

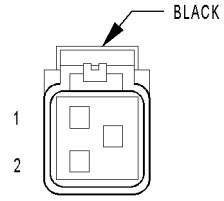

WASHER FLUID LEVEL SWITCH

WASHER FLUID LEVEL SWITCH - BLACK 2 WAY

CAV	CIRCUIT	FUNCTION
1	Z401 18BK/LB (EXCEPT EXPORT)	GROUND
1	Z401 20BK/LB (EXPORT)	GROUND
2	W1 18BR/TN	WASHER FLUID LEVEL SWITCH SENSE

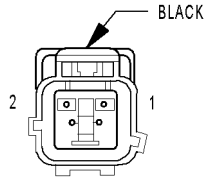

WASHER PUMP MOTOR

WASHER PUMP MOTOR - BLACK 2 WAY

CAV	CIRCUIT	FUNCTION
1	W20 18BR/YL	REAR WASHER PUMP MOTOR CONTROL
2	W10 18BR	FRONT WASHER PUMP MOTOR CONTROL

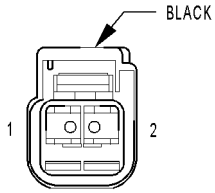

WATER IN FUEL SENSOR (DIESEL)

WATER IN FUEL SENSOR (DIESEL) - BLACK 2 WAY

CAV	CIRCUIT	FUNCTION
1	F853 20LG/RD	WATER IN FUEL SENSOR SIGNAL
2	K900 18RD	SENSOR GROUND

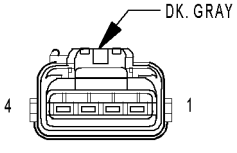

WIPER MODULE

WIPER MODULE - DK. GRAY 4 WAY

CAV	CIRCUIT	FUNCTION
1	W3 14BR/WT	FRONT WIPER HIGH/LOW RELAY LOW SPEED OUTPUT
2	W7 20BR/GY	WIPER PARK SWITCH SENSE
3	W4 14BR/OR	FRONT WIPER HIGH/LOW RELAY HIGH SPEED OUTPUT
4	Z103 14BK/WT	GROUND

8W-91 CONNECTOR/GROUND/SPLICE LOCATION

TABLE OF CONTENTS

page

CONNECTOR/GROUND/SPLICE LOCATION
DESCRIPTION 1

CONNECTOR/GROUND/SPLICE LOCATION

DESCRIPTION

This section provides illustrations identifying connector, ground, and splice locations in the vehicle. Connector, ground, and splice indexes are provided. Use the wiring diagrams in each section for connector, ground, and splice identification. Refer to the appropriate index for the proper figure number. For items that are not shown in this section N/S is placed in the Fig. column.

CONNECTORS

CONNECTOR NAME/NUMBER	COLOR	LOCATION	FIG.
A/C Compressor Clutch	LTGY	Top of A/C Compressor	10, 11, 15, 17, 18
A/C Pressure Sensor	GY	At Throttle Body	9, 10, 15, 16, 17
A/C-Heater Control C1 (MTC)	BK/RD	Rear of Control	20, 23, 25
A/C-Heater Control C2 (MTC)	BK/BL	Rear of Control	20, 23, 25
Accelerator Pedal Position Sensor (Diesel)		At Accelerator Pedal	42
Adjustable Pedals Module (Except Export)		Near Brake Lamp Switch	N/S
Adjustable Pedals Motor		On Pedal Support	N/S
Adjustable Pedals Relay (Except Export)		Left Side Engine Compartment	6
Adjustable Pedals Sensor		On Adjustable Pedals Motor	N/S
Adjustable Pedals Switch (Except Export)		Left Side Kick Panel	41
Ambient Temperature Sensor (Except Base)	BK	On Radiator Closure Panel	1
Amplifier C1	NAT	Right Quarter Panel	48
Amplifier C2	NAT	Right Quarter Panel	48
ATC Remote Sensor		Above ATC Control	N/S
Auto Temp Control C1	NAT	Rear of Control	20
Auto Temp Control C2	BK	Rear of Control	20
Auto Temp Control C3 (MTX)		Rear of Control	N/S
Back-Up Lamp Switch	BK	On Transmission	16
Battery Temperature Sensor	BK	At Battery	N/S
Blower Motor Resistor C1 (MTC)	BK	Right Side of HVAC	N/S
Blower Motor Resistor C2 (MTC)	BK	Right Side of HVAC	N/S
Body Control Module C1	BK	Under Left Instrument Panel	41, 42

CONNECTOR/GROUND/SPLICE LOCATION (Continued)

CONNECTOR NAME/NUMBER	COLOR	LOCATION	FIG.
Body Control Module C2	BK/GN	Under Left Instrument Panel	41, 42
Body Control Module C3	BK/WT	Under Left Instrument Panel	41, 42
Body Control Module C4	BK/GY	Under Left Instrument Panel	20, 21, 30
Body Control Module C5	BK	Under Left Instrument Panel	20, 21, 30
Boost Pressure Sensor (Diesel)	BK	Top Left of Engine	15
Brake Fuid Level Switch	BK	On Master Cylinder	6
Brake Lamp Switch	BK	At Top Of Brake Pedal	41, 42
Brake Transmission Shift Interlock Solenoid (EATX)	BK	Near Steering Column	20, 21, 22, 31
C100	BK	Left Fender Shield	5, 11
C101	LTGY	Left Fender Shield	5
C102 (Gas)	BK	At Fuel Rail	11, 17
C103 (Diesel)	BK	Left Side Engine Compartment	N/S
C104 (Except Export	LTGY	Near Controller Antilock Brake	18
C106 (Export)	BK/YL	Near Left Headlamp Leveling Motor	N/S
C107 (Export)	BK/YL	Near Right Headlamp Leveling Motor	N/S
C111 (EATX)	LTGY	Left Front Engine	11
C112 (Gas)	BK	Near T/O for C101	N/S
C200	GY	Left Side Instrument Panel	20, 21, 30, 41, 42
C202	GY	Right Side Instrument Panel A/C Heater Unit	20, 24, 29
C204 (Premium	NAT	Rear of Radio	50
C206	BK	Near Radio	20
C207		Near Radio	N/S
C300 (LHD)	BK	Left Front Door Lower	36, 43
C300 (RHD)	BK	Right Front Door Lower	N/S
C301	LTGY	Left Front Door Upper	36, 43
C302	LTGY	Right Front Door Upper	8, 39, 44
C303	BK	Right Front Door Lower	8, 39, 44
C304 (LHD)	YL	Left Wire Track Seat to Body	32
C305	GY	Left Wire Track Seat to Body	32 33
C306 (RHD)	YL	Right Wire Track Seat to Body	33
C307	YL	Right Wire Track Seat to Body	N/S
C308 (Except Side Airbags)	GN	Left Rear Sliding Door	40
C309 (Except Side Airbags)	GN/GY	Right Rear Sliding Door	32, 33, 39
C310 (Front Console)	BK	At Front Console	34
C311 (3 Zone HVAC)	GY	Rear A/C Switch	40
C312	GY	Right B Pillar	33, 39, 50
C313 (Rear Console/Export)	BK	At Rear Console	34
C314	BK	Left Side Liftgate	49
C315 (Power Liftgate)	BK	Right Side Liftgate	49
C316 (Power Sliding Door)	BK	Wire Track to Sliding Door	N/S

CONNECTOR/GROUND/SPLICE LOCATION (Continued)

CONNECTOR NAME/NUMBER	COLOR	LOCATION	FIG.
C317 (Power Sliding Door)	BK	Right Sliding Door	32, 45
C318 (Trailer Tow)	BK	Left Quarter	N/S
C319 (Trailer Tow)			
C320	DKGY	Driver Power Seat on Seat Harness	N/S
C321	DKGY	Under Passenger Seat	N/S
C322 (Memory)	BK	On Seat Harness to Body	32
C324 (Manual Sliding Door)	BK	Left Sliding Door	N/S
C325 (Manual Sliding Door)	BK	Right Sliding Door	32
C328 (Sunroof)		Left Quarter Panel	47
C329 (Diesel)	BK	Near Fuel Tank	N/S
C330 (Diesel)	LTGY	Near Throttle Body	15, 16
C331 (Diesel)	BK	Left Rear Engine Compartment	N/S
C332 (3 Zone ATC)	BK/LTGN	Near T/O for Right Rear Lamp Assembly	48
C333 (Except Export	DKGY	Left Side Instrument Panel	21
C334	BK	Right Quarter Panel	48
C335	LTGY	Near Fuel Tank	34
Cabin Heater Assist C1 (Diesel)	BK	Top of Engine	N/S
Cabin Heater Assist C2 (Diesel)	BK	Top of Engine	N/S
Camshaft Position Sensor (Gas)	BK	Rear of Cylinder Head Right Side of Engine	11, 17
Camshaft Position Sensor (Diesel)	BK	Rear of Cylinder Head	15, 16
CD Changer		Behind CD Changer	N/S
Center High Mounted Stop Lamp	BK	At Lamp	49
Clockspring - C1	WT	Steering Column	20, 21, 22, 23, 31
Clockspring - C2	YL	Steering Column	20, 21, 22, 23, 31
Clockspring - C3	BK	Steering Column	N/S
Clockspring - C4		Steering Column	N/S
Clutch Pedal Interlock Switch (MTX)	BK	At Switch/Driver Side	42
Clutch Pedal Upstop Switch (Diesel)	RD	At Switch/Driver Side	42
Controller Anti-Lock Brake	BK	Right Side of Engine Compartment	11, 16, 17, 18
Crank Case Ventilation Heater (Diesel)	BK	Top of Cylinder Head	15
Crankshaft Position Sensor (Diesel)	BK	Rear of Engine	16
Crankshaft Position Sensor (Gas)	BK	Rear of Engine	13, 17
Data Link Connector	BK	Lower Instrument Panel Near Steering Column	41, 42
Dosing Pump (Diesel)	BK	Top of Engine	N/S
Driver Airbag Squib1	BN/YL	Steering Column	N/S
Driver Airbag Squib2	BK/YL	Steering Column	N/S

CONNECTOR/GROUND/SPLICE LOCATION (Continued)

CONNECTOR NAME/NUMBER	COLOR	LOCATION	FIG.
Driver Blend Door Actuator	GY	On HVAC	N/S
Driver Door Courtesy Lamp	GY	At Lamp	43
Driver Door Lock Switch	BK	At Switch	43
Driver Heated Seat Back	LTGN	At Seat	N/S
Driver Heated Seat Cushion	BK	At Seat	N/S
Driver Heated Seat Module C1	GY	Driver Heated Seat	N/S
Driver Heated Seat Module C2	GY	Driver Heated Seat Back	N/S
Driver Heated Seat Module C3	GN	At Seat	N/S
Driver Knee Blocker Airbag Squib	YL	Below Steering Column	20
Driver Power Seat Front Riser Motor	RD	At Seat	N/S
Driver Power Seat Front Riser Position Sensor	BK	At Seat	N/S
Driver Power Seat Horizontal Motor	BK	At Seat	N/S
Driver Power Seat Horizontal Position Sensor	BK	At Seat	N/S
Driver Power Seat Rear Riser Motor	RD	At Seat	N/S
Driver Power Seat Rear Riser Position Sensor	BK	At Seat	N/S
Driver Power Seat Recliner Motor	GN	At Seat	N/S
Driver Power Seat Recliner Position Sensor	BK	At Seat	N/S
Driver Power Seat Switch	GN	At Switch	N/S
Driver Power Window Motor	RD	At Motor	43
Driver Power Window Switch (LHD Low Line)	LTGY	At Switch	43
Driver Power Window Switch (LHD Except Low Line)	LTGN	At Switch	N/S
Driver Power Window Switch (RHD)	NAT	At Switch	N/S
Driver Seat Belt Switch	WT	At Switch on Seat Harness	N/S
Driver Seat Belt Tensioner	YL	On Seat Harness	N/S
DVD Screen	BK	Headliner	50
DVD/CD Changer C1	BK	Below Radio	N/S
DVD/CD Changer C2		Below Radio	N/S
EGR Solenoid (Diesel)	LTGY	Above Transmission Right Side of Engine	15
EGR Solenoid (3.3L)	BK	Above A/C Compressor Right Side of Engine	18
Engine Control Module C1 (Diesel)	BK	Right Side of Engine	N/S
Engine Control Module C2 (Diesel)	BK	Right Side of Engine	N/S

CONNECTOR/GROUND/SPLICE LOCATION (Continued)

CONNECTOR NAME/NUMBER	COLOR	LOCATION	FIG.
Engine Coolant Temp Sensor (Gas)	BK	On Cylinder Block	N/S
Engine Oil Pressure Sensor (Diesel)	BK	Rear of Engine	16
Engine Coolant Temp Sensor (Diesel)	BL	On Cylinder Block	15
Engine Oil Pressure Switch (Gas)	LTGN	On Cylinder Block	12, 18
Engine Starter Motor		At Starter Motor	13, 15, 18
EVAP/Purge Solenoid (Gas)	BK	Right Motor Mount	10, 17
Evaporator Temperature Sensor	BK	Right Side of HVAC	N/S
Floor Console Lamp	BK	At Lamp	N/S
Floor Console Power Outlet	RD	At Front Console	N/S
Front Blower Module C1 (ATC)	BK	On HVAC	N/S
Front Blower Module C2 (ATC)	BK	On HVAC	N/S
Front Cigar Lighter	RD/NAT	Rear of Lighter	20, 23, 25
Front Control Module	BK	In Integrated Power Module	N/S
Front Intrusion Sensor (United Kingdom)	BK	At Sensor	N/S
Front Reading Lamps/Switch	BK	At Switch	N/S
Fuel Heater (Diesel)	BK	Left Rear Engine Compartment	N/S
Fuel Injector No.1 (2.4L/3.3L/ 3.8L)	BK	At Fuel Injector	N/S
Fuel Injector No.1 (Diesel)	BK	At Fuel Injector	15
Fuel Injector No.2 (2.4L/3.3L/ 3.8L)	BK	At Fuel Injector	N/S
Fuel Injector No.2 (Diesel)	BK	At Fuel Injector	15
Fuel Injector No.3 (2.4L/3.3L/ 3.8L)	BK	At Fuel Injector	N/S
Fuel Injector No.3 (Diesel)	BK	At Fuel Injector	15
Fuel Injector No.4 (2.4L/3.3L/ 3.8L)	BK	At Fuel Injector	N/S
Fuel Injector No.4 (Diesel)	BK	At Fuel Injector	15
Fuel Injector No.5 (3.3L/3.8L)	BK	At Fuel Injector	N/S
Fuel Injector No.6 (3.3L/3.8L)	BK	At Fuel Injector	N/S
Fuel Pressure Sensor (Diesel)	BK	Top Left of Engine	15
Fuel Pressure Solenoid (Diesel)		Right Front Engine	15
Fuel Pump Module	LTGY	Side of Fuel Tank	34
Generator	BK	Rear of Generator	11, 15, 17, 18
Glow Plug No.1 (Diesel)		Top of Engine	N/S
Glow Plug No.2 (Diesel)		Top of Engine	15
Glow Plug No.3 (Diesel)		Top of Engine	15
Glow Plug No.4 (Diesel)		Top of Engine	15
Glow Plug Relay (Diesel)	BK	Near Transmission	15, 16
Hands Free Module C1		Instrument Panel	N/S

CONNECTOR/GROUND/SPLICE LOCATION (Continued)

CONNECTOR NAME/NUMBER	COLOR	LOCATION	FIG.
Hands Free Module C2	BK	Instrument Panel	N/S
Hands Free Module C3		Instrument Panel	N/S
Headlamp Switch	BK	Rear of Switch	20, 21, 30
Headlamp Washer Pump Motor (Export)	BK	At Motor	3
High Note Horn	BK	Left Frame Rail	5
Hood Ajar Switch (Export)	BK	Left Fender	6
Idle Air Control Motor (Gas)	BK	On Throttle Body	10, 11 17
Ignition Coil (2.4L)	BK	Top of Valve Cover	10, 11
Ignition Coil (3.3L/ 3.8L)	DKGY	Top of Engine	17, 18
Ignition Switch	BK	Rear of Switch at Steering Column	20, 21, 22, 23, 31
Inlet Air Temperature Sensor	BK	Top Left of Engine	9, 10, 11, 17
Input Speed Sensor	GY	Front of Transmission	14, 19
Instrument Cluster	BK	Rear of Cluster	20, 21, 28
Instrument Panel Switch Bank (Heated Seats)	BK	Right Center of Instrument Panel	20, 23, 25
Instrument Panel Switch Bank (Except Heated Seats)		Right Center of Instrument Panel	20, 23, 25
Integrated Power Module C1		Left Fender Shield	7
Integrated Power Module C2	GN/BL	Left Fender Shield	7
Integrated Power Module C3		Left Fender Shield	7, 11
Integrated Power Module C4	BL	Left Fender Shield	7, 11
Integrated Power Module C5	BK	Left Fender Shield	7
Integrated Power Module C6	NAT	Left Fender Shield	7
Integrated Power Module C7		Left Fender Shield	7
Integrated Power Module C8	OR	Left Fender Shield	7
Integrated Power Module C9	BK	Left Fender Shield	7
Knock Sensor (Except Export)	BK	At Engine Block	11
Left B Pillar Switch (Power Sliding Door)	GY	Left B Pillar	40
Left Cinch/Release Motor (Power Sliding Door)	GY	Left Sliding Door	N/S
Left Curtain Airbag Squib		Rear of Left Roof Rail	47
Left Cylinder Lock Switch	BK	At Switch	43
Left Door Speaker	BK	At Speaker	43
Left Fog Lamp	BK	At Lamp	5
Left Front Door Ajar Switch (Base)	BK	At Switch	N/S
Left Front Door Lock Motor/Ajar Switch (Except Base)	BK	Left Door	43
Left Front Impact Sensor	BK	Near T/O for C101	5
Left Front Park/Turn Signal Lamp (Except Export)	DKGY	At Lamp	1
Left Front Wheel Speed Sensor	GY	Left Fender Side Shield	5, 11

CONNECTOR/GROUND/SPLICE LOCATION (Continued)

CONNECTOR NAME/NUMBER	COLOR	LOCATION	FIG.
Left Full Open Switch (Power Sliding Door)	BK	Left Sliding Door	N/S
Left Headlamp Caravan/Voyager (Except Export)	BK	At Lamp	1
Left Headlamp (Town & Country)	GN	At Lamp	1
Left Headlamp Leveling Motor (Export)	WT	At Motor	N/S
Left High Beam Lamp (Export)	BK	At Lamp	N/S
Left Instrument Panel Speaker	WT	At Speaker	20, 21, 27
Left Liftgate Flood Lamp (Power Liftgate)	GY	At Lamp	49
Left Low Beam Lamp (Export)	BK	At Lamp	N/S
Left Mid Reading Lamp (Premium/Luxury)	GY	At Lamp	N/S
Left Park Lamp (Export)	BK	At Lamp	NS
Left Power Mirror	BK	At Mirror	27
Left Rear Lamp Assembly	BK	At Lamp	47
Left Rear Pillar Speaker (Highline Audio)	BK	Left of Liftgate	47
Left Rear Reading Lamp (Luxury)	GY	At Lamp	N/S
Left Rear Speaker (Highline)	BK/RD	At Speaker	47
Left Rear Speaker (Lowline)		At Speaker	N/S
Left Rear Vent Motor	NAT	At Motor	46, 47
Left Rear Wheel Speed Sensor	BK	Center Rear of Floor Pan	47
Left Remote Radio Switch	BK	Steering Wheel	N/S
Left Repeater Lamp (Export)	GY	Left Front Fender	4, 36
Left Side Impact Sensor 1	DKGY	Left B Pillar	40
Left Side Impact Sensor 2		Left Sliding Door	N/S
Left Side Impact Sensor 3	BK	Left Quarter Panel	47
Left Sliding Door Control Module C1	BK	Left Sliding Door	N/S
Left Sliding Door Control Module C2		Left Sliding Door	N/S
Left Sliding Door Latch Sensing Switch	BK	Left Sliding Door	N/S
Left Sliding Door Lock Motor	BK	Left Sliding Door	N/S
Left Sliding Door Lock Motor/Ajar Switch (Manual Sliding Door)	BK	Left Sliding Door	N/S
Left Sliding Door Motor	BK	Left Sliding Door	N/S
Left Speed Control Switch	WT	Steering Wheel	N/S
Left Turn Signal Lamp (Export)	OR	AT Lamp	N/S
Left Visor/Vanity Lamp	BK	At Lamp	N/S
License Lamp	DKGY	At Lamp	49
Lift Pump Motor (Diesel)	BK	Left Rear Engine Compartment	N/S

CONNECTOR/GROUND/SPLICE LOCATION (Continued)

CONNECTOR NAME/NUMBER	COLOR	LOCATION	FIG.
Liftgate Ajar Switch (Manual Release)	BK	At Latch	49
Liftgate Ajar Switch (Power Release)	BK	Lower Liftgate	49
Liftgate Cinch/Release Motor (Power Liftgate)	BL	Liftgate	49
Liftgate Left Pinch Sensor (Power Liftgate)	BK	Left Side of Liftgate	49
Liftgate Right Pinch Sensor (Power Liftgate)	BK	Right Side of Liftgate	49
Manifold Absolute Pressure Sensor (Gas)	BK	On Intake	N/S
Mass Air Flow Sensor (Diesel)	OR	Top of Engine	15, 16
Memory Seat/Mirror/Adjustable Pedals Module C1	GY	Under Driver Seat	N/S
Memory Seat/Mirror/ Adjustable Pedals Module C2	GY	Under Driver Seat	N/S
Memory Seat/Mirror/ Adjustable Pedals Module C3	WT	Under Driver Seat	N/S
Memory Seat/Mirror/ Adjustable Pedals Module C4	GY	Under Driver Seat	N/S
Memory Set Switch	BK	At Switch Driver Door	43
Message Center (Highline)	WT	Rear of Message Center	20, 21, 28
Mode Door Actuator	GY	Left Side of HVAC	N/S
Multi Function Switch	BK	At Steering Column	20, 21, 22, 23, 31
Natural Vacuum Leak Detection Assembly (Except Export)	LTGY	Top of Engine	12
Occupant Classification Module	BK	Passenger Seat	N/S
Occupant Restraint Controller C1	YL	Right Side Instrument Panel	
Occupant Restraint Controller C2	YL	Right Side Instrument Panel	20, 24, 25
Output Speed Sensor	GY	Front of Transmission	14, 19
Overhead Console (Except Base)	BK	Front of Console	N/S
Oxygen Sensor 1/1 Upstream (Gas)		Rear of Engine	11, 12, 18
Oxygen Sensor 1/2 Downstream (Gas)		Rear of Engine	11, 12,18
Park Brake Switck		Bottoom Left Side of Instrument Panel	20, 21
Park Sensor No.1 (Parktronics)		Rear Fascia	N/S
Park Sensor No.2 (Parktronics)		Rear Fascia	N/S
Park Sensor No.3 (Parktronics)		Rear Fascia	N/S
Park Sensor No.4 (Parktronics)		Rear Fascia	N/S
Passenger Airbag	YL	Passenger Side of Instrument Panel	20, 23, 24, 29
Passenger Airbag On/Off Indicator Lamp		Right Center of Instrument Panel	20, 23, 25
Passenger Blend Door Actuator	GY	On HVAC	N/S

CONNECTOR/GROUND/SPLICE LOCATION (Continued)

CONNECTOR NAME/NUMBER	COLOR	LOCATION	FIG.
Passenger Door Courtesy Lamp	GY	At Lamp	44
Passenger Door Lock Switch	BK	At Switch	44
Passenger Folding Mirror Relay (Export)	BL	Left Kick Panel	7
Passenger Heated Seat Back	GN	At Seat	N/S
Passenger Heated Seat Cushion	BK	At Seat	N/S
Passenger Heated Seat Module	GY	At Heated Seat	N/S
Passenger Power Seat Front Riser Motor	RD	Under Seat	N/S
Passenger Power Seat Horizontal Motor	BK	Under Seat	N/S
Passenger Power Seat Rear Riser Motor	RD	Under Seat	N/S
Passenger Power Seat Recliner Motor	GN	Under Seat	N/S
Passenger Power Seat Switch	GN	At Switch	N/S
Passenger Power Window Motor	RD	At Motor	44
Passenger Power Window Switch	BK	At Switch	44
Passenger Seat Belt Switch (Occupant Sensing)	YL	On Seat Harness	N/S
Passenger Seat Belt Tensioner		On Seat Harness	N/S
Passenger Seat Weight Sensor	BK	Passenger Seat	N/S
Power Folding Mirror Switch (Export)	BK	Near Steering Column	31
Power Liftgate Module C1	BK	Left Quarter	46, 47
Power Liftgate Module C2		Left Quarter	46, 47
Power Liftgate Motor	BK	Left Quarter	47
Power Mirror Switch	BK	Rear of Switch	30
Power Outlet (Except Lowline)	BK	Instrument Panel	20, 23, 25
Power Seat Circuit Breaker	GY	Under Seat	N/S
Powertrain Control Module C1	BK	Left Front Engine Compartment	11
Powertrain Control Module C2	OR	Left Front Engine Compartment	11
Powertrain Control Module C3	NAT	Left Front Engine Compartment	11
Powertrain Control Module C4	GN	Left Front Engine Compartment	11
Power Window Circuit Breaker	GY	Left Side Kick Panel	41 42
Radiator Fan No.1 (Gas)	BK	Left Side At Motor	1
Radiator Fan No.1 (Diesel)	GY	Left Side At Motor	1
Radiator Fan No.2 (Gas)	BK	Right Side At Motor	1, 2
Radiator Fan No.2 (Diesel)	GY	Right Side At Motor	1, 2
Radiator Fan Relay (Gas)		Top of Left Front Frame Rail	1
Radiator Fan Relay No. 1 (Diesel)	BL	Left Front Engine Compartment	2
Radiator Fan Relay No. 2 (Diesel)	BL	Left Front Engine Compartment	2

CONNECTOR/GROUND/SPLICE LOCATION (Continued)

CONNECTOR NAME/NUMBER	COLOR	LOCATION	FIG.
Radiator Fan Relay No. 3 (Diesel)	BL	Left Front Engine Compartment	2
Radio C1		Rear of Radio	20
Radio C2 (CD Changer)		Rear of Radio	20
Radio C2 (DVD/CD Changer)		Rear of Radio	20
Radio C2 (Hands Free)		Rear of Radio	20
Rear A/C-Heater Unit (3 Zone MTC)	LTGN	Right Quarter Panel	NS
Rear Auto Temp Control Switch (3 Zone ATC)	BK	Rear of Switch	50
Rear Blower Front Control Switch (3 Zone MTC)	BK	Rear of Switch	N/S
Rear Blower Motor Power Module C1 (3 Zone ATC)	RD/BK	Right Quarter	N/S
Rear Blower Motor Power Module C2 (3 Zone ATC)	BK	Right Quarter	N/S
Rear Blower Rear Control Switch C1 (3 Zone MTC)	BK	Overhead	50
Rear Blower Rear Control Switch C2 (3 Zone MTC)	BK	Overhead	50
Rear Dome Lamp (Except Luxury)	GY	At Lamp	N/S
Rear Intrusion Sensor (United Kingdom)		At Sensor	N/S
Rear Mode Motor (3 Zone ATC)	GY	At Motor	N/S
Rear Park Assist Display Module		Overhead Console	N/S
Rear Park Assist Module		Left Quarter Panel	47
Rear Power Outlet	GY	Left Quarter Panel	47
Rear Temperature Motor (3 Zone ATC)	GY	Right Quarter	N/S
Rear View Mirror C1	BK	At Mirror	NS
Rear View Mirror C2		At Mirror	N/S
Rear Window Defogger C1		Right Side of Liftgate	49
Rear Window Defogger C2		Left Side of Liftgate	49
Rear Wiper Motor		At Motor	49
Recirculation Door Actuator	GY	Right Side of HVAC	N/S
Right B-Pillar Switch (Power Sliding Door)	GY	Right B Pillar	39
Right Cinch/Release Motor (Power Sliding Door)	GY	Right Sliding Door	45
Right Curtain Airbag Squib		Rear of Right Roof Rail	48
Right Cylinder Lock Switch (Export)	BK	Right Front Door	44
Right Door Speaker		At Speaker	N/S
Right Fog Lamp	WT	At Lamp	3

CONNECTOR/GROUND/SPLICE LOCATION (Continued)

CONNECTOR NAME/NUMBER	COLOR	LOCATION	FIG.
Right Front Door Ajar Switch (Base)	BK	At B Pillar	N/S
Right Front Door Lock Motor/Ajar Switch (Except Base)	BK	Right Front Door	44
Right Front Impact Sensor	BK	Near T/O for C303	N/S
Right Front Park/Turn Signal Lamp (Except Export)	BK	At Lamp	1, 3
Right Front Wheel Speed Sensor	GY	Right Fender Side Shield	3,10, 16, 17
Right Full Open Switch (Power Sliding Door)	BK	Right Sliding Door	45
Right Headlamp (Caravan/ Voyager Except Export)	BK	At Lamp	1, 3
Right Headlamp Leveling Motor (Export)	WT	At Right Headlamp	N/S
Right High Beam Lamp (Export)	BK	At Right Headlamp	N/S
Right Instrument Panel Speaker	WT	At Speaker	20, 23, 24
Right Liftgate Flood Lamp (Power Liftgate)	GY	At Lamp	49
Right Low Beam Lamp (Export)	BK	At Right Headlamp	N/S
Right Mid Reading Lamp (Premium/ Luxury)	GY	At Lamp	N/S
Right Park Lamp (Export)	BK	AT Lamp	N/S
Right Power Mirror	BK	At Mirror	20, 24, 28
Right Rear Lamp Assembly	BK	At Lamp	48
Right Rear Pillar Speaker (Highline Audio)	BK	At Speaker	48
Right Rear Reading Lamp (Luxury)	GY	At Lamp	N/S
Right Rear Speaker)		At Speaker	48
Right Rear Vent Motor	NAT	At Motor	48
Right Rear Wheel Speed Sensor	BK	Right Rear of Floor Pan	48
Right Remote Radio Switch	BK	At Steering Wheel	N/S
Right Repeater Lamp (Export)	GY	Right Front Fender	39
Right Side Impact Sensor 1		Right B Pillar	39
Right Side Impact Sensor 2		Right Sliding Door	32
Right Side Impact Sensor 3	BK	Right Quarter Panel	48
Right Sliding Door Control Module C1	BK	Right Sliding Door	45, 46
Right Sliding Door Control Module C2		Right Sliding Door	45, 46
Right Sliding Door Latch Sensing Switch	BK	Right Sliding Door	45
Right Sliding Door Lock Motor	BK	Right Sliding Door	45
Right Sliding Door Lock Motor/Ajar Switch (Manual Sliding Door)	BK	Right Sliding Door	N/S

CONNECTOR/GROUND/SPLICE LOCATION (Continued)

CONNECTOR NAME/NUMBER	COLOR	LOCATION	FIG.
Right Sliding Door Motor	BK	At Sliding Door	45
Right Speed Control Switch	WT	At Steering Wheel	N/S
Right Turn Signal Lamp (Export)	OR	At Lamp	N/S
Right Visor/Vanity Lamp	BK	At Lamp	N/S
Sentry Key Remote Entry Module (SKREEM)	BK	At Steering Column	20, 21, 22, 23, 31
Siren (United Kingdom)	BK	Left Front Body	N/S
Speed Control Servo (Gas)	BK	Near Controller Antilock Brake	11, 17, 18
Sunroof Module (Except Export)	BK	At Sunroof	N/S
Sunroof Switch (Except Export)	NAT	Near Overhead Console	N/S
Thatcham Alarm Module (United Kingdom)	BK	Top Right Side of Instrument Panel Near Speaker	N/S
Throttle Position Sensor (Gas)	GY	On Throttle Body	10, 11, 17
Traction Control Switch	BK	Rear of Swtich	21, 22, 31
Trailer Tow Connector (Except Export)		Left Quarter Panel	N/S
Transmission Control Relay (Diesel)		Near Transmission	16
Transmission Range Sensor	DKGY	Top of Transmission	14, 19
Transmission Solenoid/Pressure Switch Assembly	BK	Side of Transmission	14, 19
Vehicle Speed Sensor (MTX)	BK	Rear of Transmission	16
Washer Fluid Level Switch	BK	Bottom of Reservoir	3
Washer Pump Motor	BK	Right Fender Well	3
Water in Fuel Sensor (Diesel)	BK	Left Rear Engine Compartment	N/S
Wiper Module	DKGY	Left Side Cowl	6

GROUNDS

GROUND NUMBER	LOCATION	FIG.
G100	Body Ground Near Powertrain Control Module	N/S
G101	Above Starter	13, 15, 18
G102	Left Headlamp Area	1
G103	Above Starter	15
G200	Left Side of Instrument Panel	20, 21 29
G201	Right Side of Instrument Panel	20, 24, 29
G202	Near Radio	N/S
G300	Left B Pillar	32
G301	Right B Pillar	33, 39
G302	Left Rear Quarter	47
G303	Liftgate Ground	49

CONNECTOR/GROUND/SPLICE LOCATION (Continued)

SPLICES

SPLICE NUMBER	LOCATION	FIG.
S101 (Gas)	Near T/O for Radiator Fan No.1	1
S103 (Diesel)	Between T/O for Battery Temperature Sensor and T/O for C102	15
S106 (2.5L)	Near T/O for Battery Temperature Sensor	15
S106 (3.3L/3.8L)	Near T/O for G103	18
S107 (Gas)	Near T/O for Integrated Power Module C3	11
S107 (Diesel)	In T/O for Integrated Power Module C3	7
S111 (2.4L)	Near T/O for C101	11
S111 (Diesel)	In T/O for Battery (-)	N/S
S111 (3.3L/3.8L)	Near T/O for Battery Temperature Sensor	N/S
S112 (Gas)	Near T/O for Integrated Power Module - C3	19, 5, 11
S113 (2.4L)	Near T/O for Park/Neutral Position Switch	11
S114 (2.4L)	Near T/O for Powertrain Control Module C4	11
S114 (3.3L/3.8L)	In T/O to Transmission Control Module	N/S
S115 (2.4L)	Near T/O for Powertrain Control Module C4	11
S115 (3.3L/3.8L)	In T/O to Transmission Control Module	N/S
S116 (2.4L)	180mm from T/O for Torque Converter Clutch Solenoid	11, 13
S116 (Diesel)	Near T/O for Mass Air Flow Sensor	16
S116 (3.3L/3.8L)	Near T/O for G103	18
S118 (2.4L)	Near T/O for Knock Sensor	11, 13
S119 (Diesel)	Near T/O for Engine Starter Motor	15
S121 (3.3L/3.8L)	Near T/O for Output Speed Sensor	18
S122 (2.4L)	In T/O to Engine Starter Motor	13
S122 (3.3L/3.8L)	In T/O to Engine Starter Motor	18
S124 (2.4L)	Near T/O for Fuel Injector No.2	N/S
S124 (3.3L/3.8L)	Near T/O for Fuel Injector No.5 and No.6	N/S
S125 (2.4L)	In T/O for Manifold Absolute Pressure Sensor	N/S
S126	In Right Headlamp Leveling Assembly	N/S
S127 (Diesel)	In T/O for Engine Starter Motor	N/S
S128 (Diesel)	Near T/O for Engine Starter Motor	N/S
S129 (Diesel)	Near T/O for Battery (+)	N/S
S130 (Diesel)	Near T/O for Battery (+)	N/S
S131 (2.4L)	Near T/O for Transmission Control Module	11
S131 (3.3L/3.8L)	Near T/O for C110	N/S
S132 (Diesel)	Near T/O for Battery (+)	N/S
S134 (Diesel)	IN T/O for Engine Control Module	N/S
S135 (Diesel)	Near T/O for Glow Plug No.2	N/S
S136 (Diesel)	In T/O for Radiator Fan Relays	2
S137 (Diesel)	Above Starter	15
S138 (Diesel)	Between T/O for Radiator Fan No.2 and T/O for G102	N/S

CONNECTOR/GROUND/SPLICE LOCATION (Continued)

SPLICE NUMBER	LOCATION	FIG.
S139 (Diesel)	Between T/O for Engine Starter Motor and T/O for Engine Control Module C1	15, 16
S141 (2.4L)	Near T/O for Controller Anti-Lock Brake	11
S141 (3.3L/3.8L ABS Except Export)	Near T/O for G100	N/S
S141 (Diesel)	Near T/O for G100	N/S
S141 (3.3L/3.8L)	Near T/O for Powertrain Control Module	N/S
S142 (3.3L/3.8L)	Near T/O for A/C Compressor Clutch	18
S144 (Diesel)	Between T/O for Battery Temperature Sensor and T/O for C103	N/S
S148 (Diesel)	Near T/O for Engine Starter Motor	5
S150 (Diesel)	Near T/O for Controller Anti-Lock Brake	N/S
S151 (Diesel)	Near T/O for Radiator Fan Relays	2
S152 (Diesel)	Near T/O for Radiator Fan No.1	N/S
S157 (Diesel)	Near T/O for Glow Plug No.4	15
S177	In Right Headlamp Wiring Assembly	N/S
S179	In Left Headlamp Wiring Assembly	N/S
S187 (Diesel)	In T/O for Engine Control Module C1	15
S188 (Diesel)	Near T/O for Radiator Fan Relays	2
S189 (Diesel EATX)	Near T/O for Battery (+)	N/S
S190 (Diesel EATX)	Near T/O for Transmission Control Module	N/S
S191 (Diesel EATX)	Near T/O for Transmission Control Module	N/S
S192 (Diesel EATX)	In T/O for Transmission Control Module	N/S
S193 (Diesel EATX)	In T/O for Transmission Control Module	N/S
S201	In T/O to Instrument Panel Speaker	20, 26
S202	Near T/O for Instrument Panel Switch Bank	20, 26
S203	Near T/O for Instrument Panel Switch Bank	20, 26
S204	Near T/O to Instrument Panel Speaker	20, 26
S205	Near T/O for C201	N/S
S206	Near T/O for Instrument Cluster	20
S207	Near T/O for A/C Heater Control	20, 26
S208 (RHD)	Between T/O for Antenna Connector and T/O for Front Cigar Lighter	26
S209	Near T/O for Evaporator Temperature Sensor	N/S
S210 (RHD)	Near T/O for C203	26
S211	In Steering Column Wiring Assembly	N/S
S212	In Steering Column Wiring Assembly	N/S
S222	Near T/O for C204	N/S
S223	Near T/O for Multi-Function Switch	20
S224	Near T/O for Siren	N/S
S225 (Hands Free)	Near T/O for Rear View Mirror	N/S
S226 (Hands Free)	In T/O for C207	N/S
S302	In Floor Pan Track Wiring	37

CONNECTOR/GROUND/SPLICE LOCATION (Continued)

SPLICE NUMBER	LOCATION	FIG.
S303	In T/O to Data Link Connector	37, 41, 42
S304 (Export)	In Floor Pan Track Wiring	38
S305	Near T/O for Memory Seat/Mirror Module - C2	N/S
S306	In Floor Pan Track Wiring	38
S307	Near T/O for Memory Power Seat Switch	N/S
S309	In Floor Pan Track Wiring	N/S
S310	Near T/O for C301	35, 36, 37
S311	In Floor Pan Track Wiring	N/S
S312	Near T/O for C320	N/S
S313	Near T/O for Power Liftgate Module	47
S316	In Floor Pan Track Wiring	34
S317	Near T/O for Body Control Module	42
S318	Near T/O for Power Seat Circuit Breaker	34
S319 (Export)	In Floor Pan Track Wiring	38
S321	Ner T/O for C301	35, 36, 37
S322	Near T/O for C301	37
S323	In Floor Pan Track Wiring	34
S324	In Floor Pan Track Wiring	34
S325 (Export)	In Floor Pan Track Wiring	34
S326	Near T/O for C101	35, 36
S330	Near T/O for Power Liftgate Module	47
S331	Near T/O for Power Liftgate Motor	47
S332	In Floor Pan Track Wiring	N/S
S333 (3 Zone MTC)	In Floor Pan Track Wiring	37
S334	Near T/O to G301	34
S335	Near T/O for Left Rear Reading Lamp	N/S
S336	Near T/O for Left Rear Reading Lamp	N/S
S337	Near T/O for Right Mid Reading Lamp	N/S
S338	Near T/O for Right Visor/Vanity Lamp	N/S
S339	Near T/O for C312	N/S
S342 (LHD)	Near T/O for Passenger Power Window Motor	44
S343 (LHD)	Near T/O for Driver Power Window Motor	43
S344	In T/O to Right Sliding Door Control Module C2	45, 46
S345	Near T/O for Right Sliding Door Motor	45, 46
S346	Near T/O for Driver Power Window Switch	43
S347	Near T/O for Right Sliding Door Lock Motor	45, 46
S348	Near T/O for Left Sliding Door Lock Motor	46
S349	In T/O to Left Sliding Door Control Module - C2	46
S350	Near T/O for Left Sliding Door Motor	46
S352	Near T/O for Liftgate Cinch/Release Motor	49
S354 (Export)	Near T/O for C301	36, 37
S354 (Except Export)	Near T/O for C101	37

CONNECTOR/GROUND/SPLICE LOCATION (Continued)

SPLICE NUMBER	LOCATION	FIG.
S355	In T/O for C307	N/S
S356 (Export)	In Floor Pan Track Wiring	37
S356 (Except Export)	Near T/O for Passenger Heated Seat Back	N/S
S359	Left Quarter Panel	47
S361	Near T/O for C304	N/S
S362	Near T/O for C304	N/S
S363	Near T/O for C331	N/S
S364 (RHD)	Near T/O for Passenger Power Window Window	44
S365 (LHD)	Near T/O for Driver Power Window Window	N/S
S366	In Passenger Power Heated Seat Wiring Assembly	N/S
S367	Near T/O for C301	37
S368 (Diesel)	Near T/O for C101	35, 36
S370 (Except Export)	In T/O for Integrated Power Module C6	7
S371	In T/O to Power Window Switch	N/S
S372	Near T/O for Data Link Connector	41
S373 (Except Export	In Floor Pan Track Wiring	37
S374	Near T/O for Body Control Module	N/S
S376 (Highline Audio)	In Floor Pan Track Wiring	34
S378	Near T/O for C301	35, 36, 37
S380 (Highline Audio)	Right Quarter Panel	48
S381 (Highline Audio)	Right Quarter Panel	48
S382 (Passenger Heated Seat)	Near T/O for Passenger Seat Weight Sensor	N/S
S383 (Parktronics)	Rear Fascia	N/S
S384 (Parktronics)	Rear Fascia	N/S

CONNECTOR/GROUND/SPLICE LOCATION (Continued)

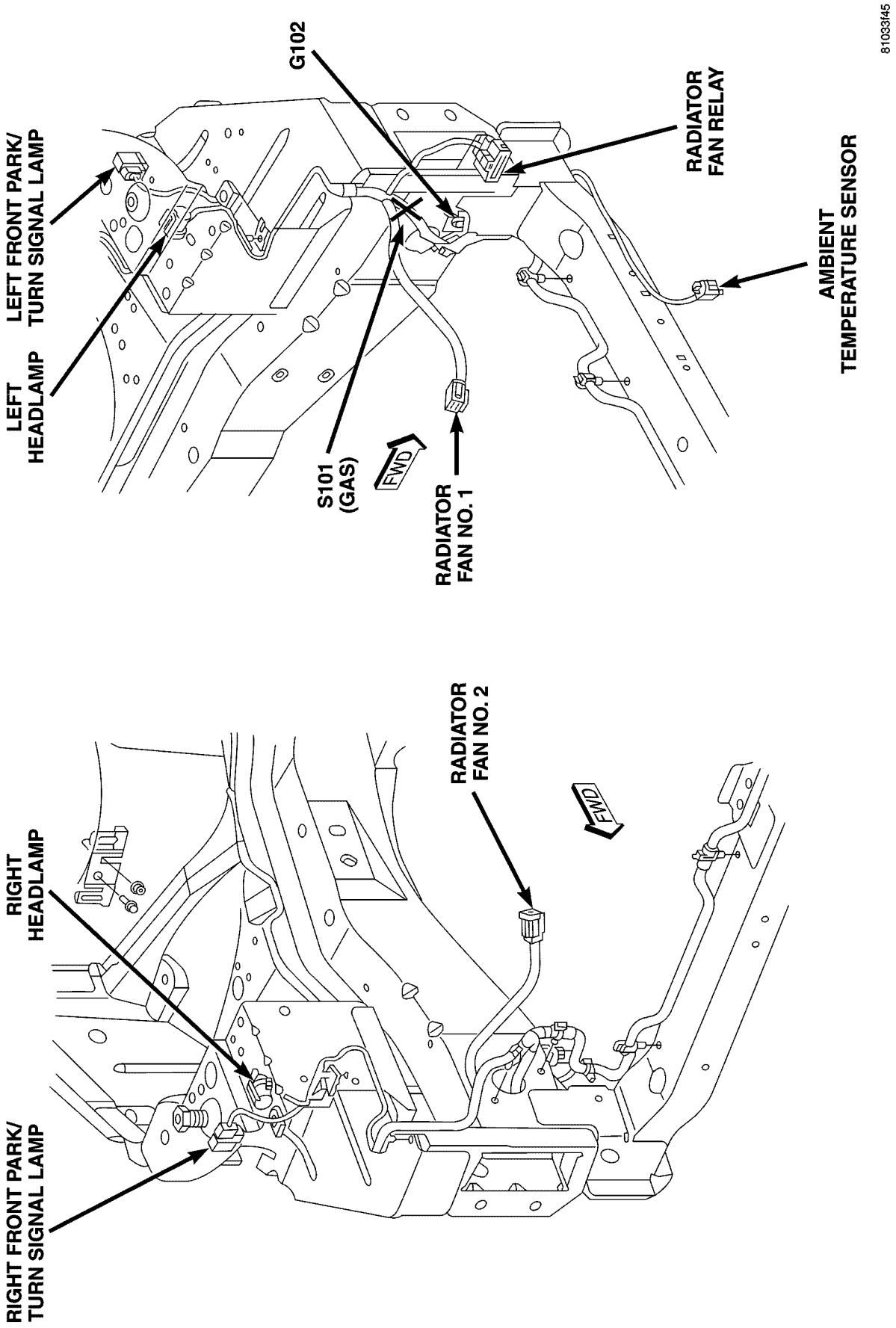

Fig. 1 HEADLAMP CONNECTORS

CONNECTOR/GROUND/SPLICE LOCATION (Continued)

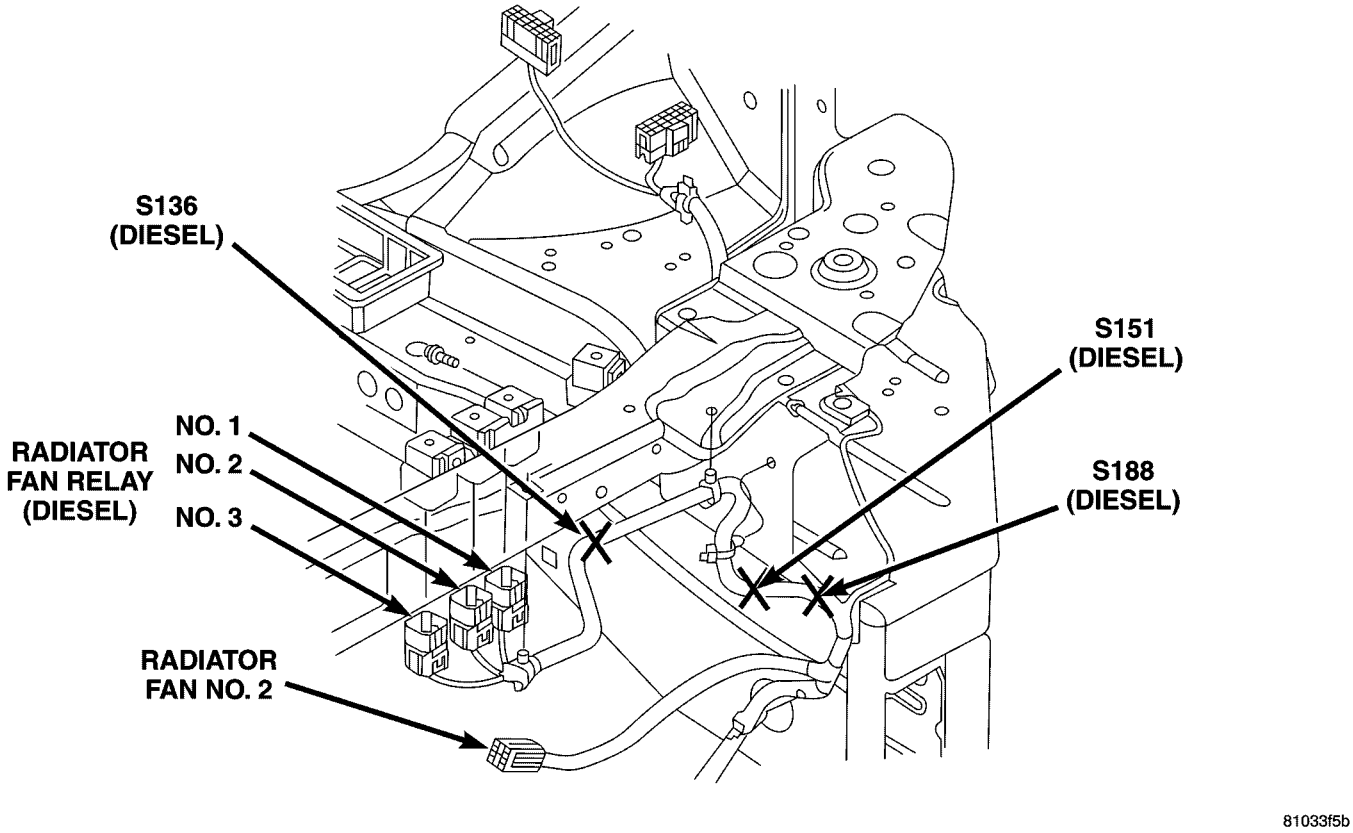

Fig. 2 LEFT FRONT ENGINE COMPARTMENT

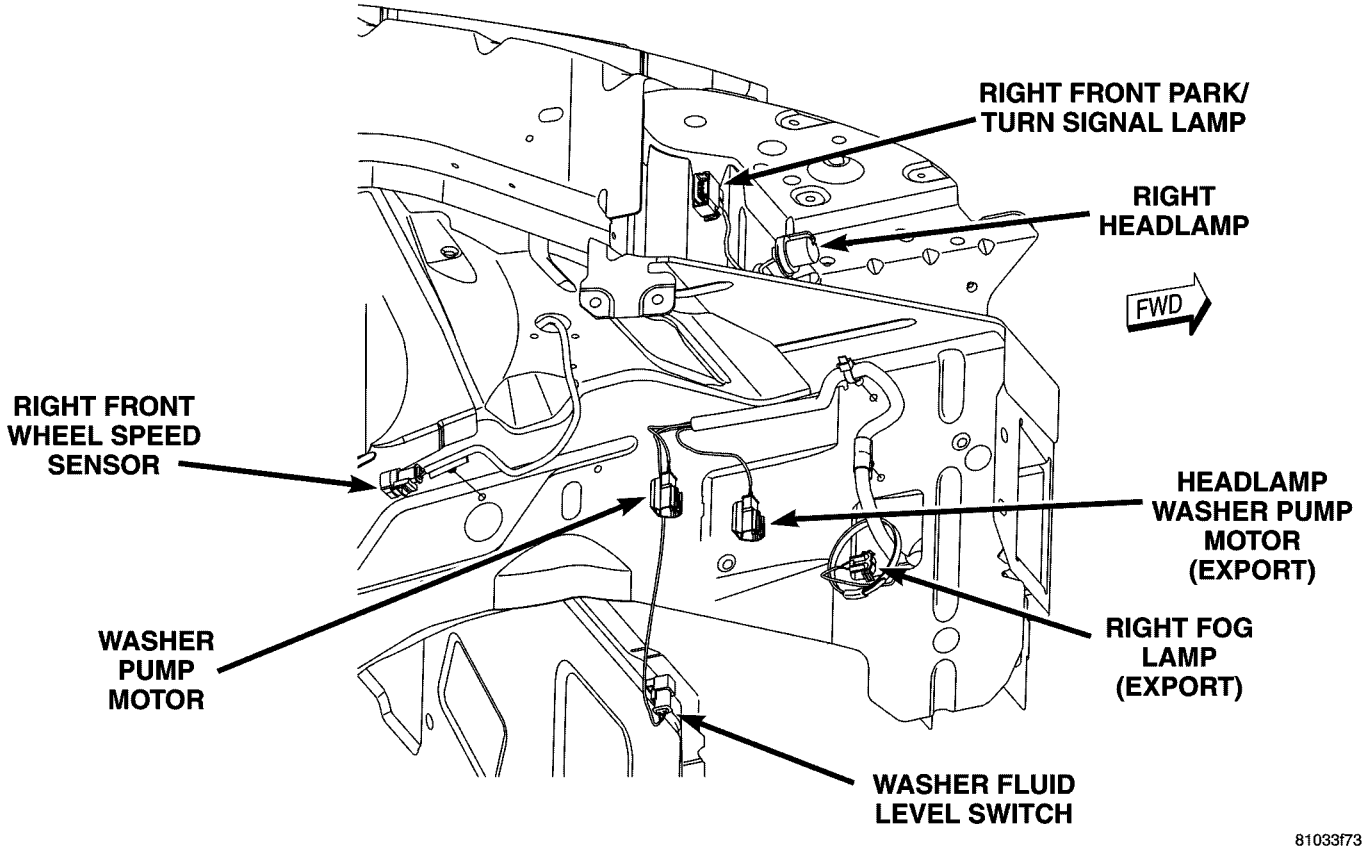

Fig. 3 WASHER PUMP CONNECTORS

CONNECTOR/GROUND/SPLICE LOCATION (Continued)

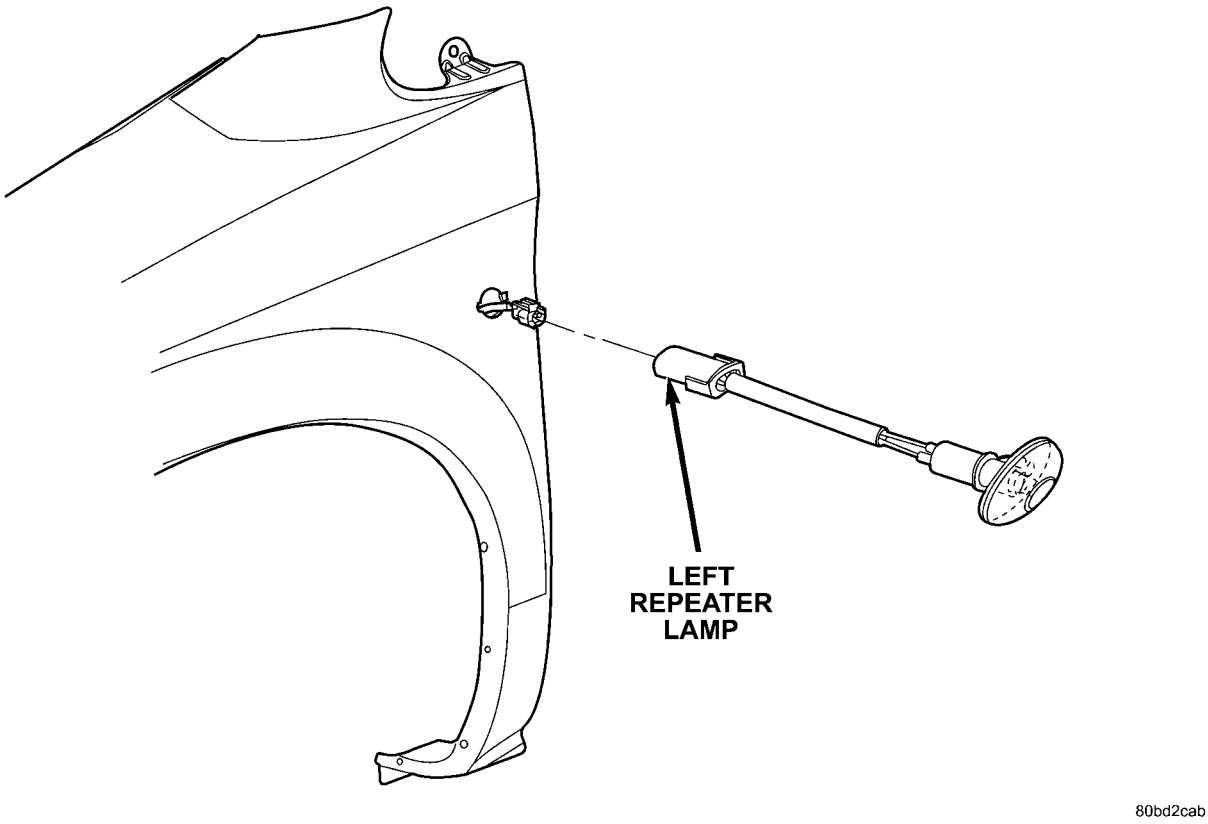

Fig. 4 LEFT REPEATER LAMP

CONNECTOR/GROUND/SPLICE LOCATION (Continued)

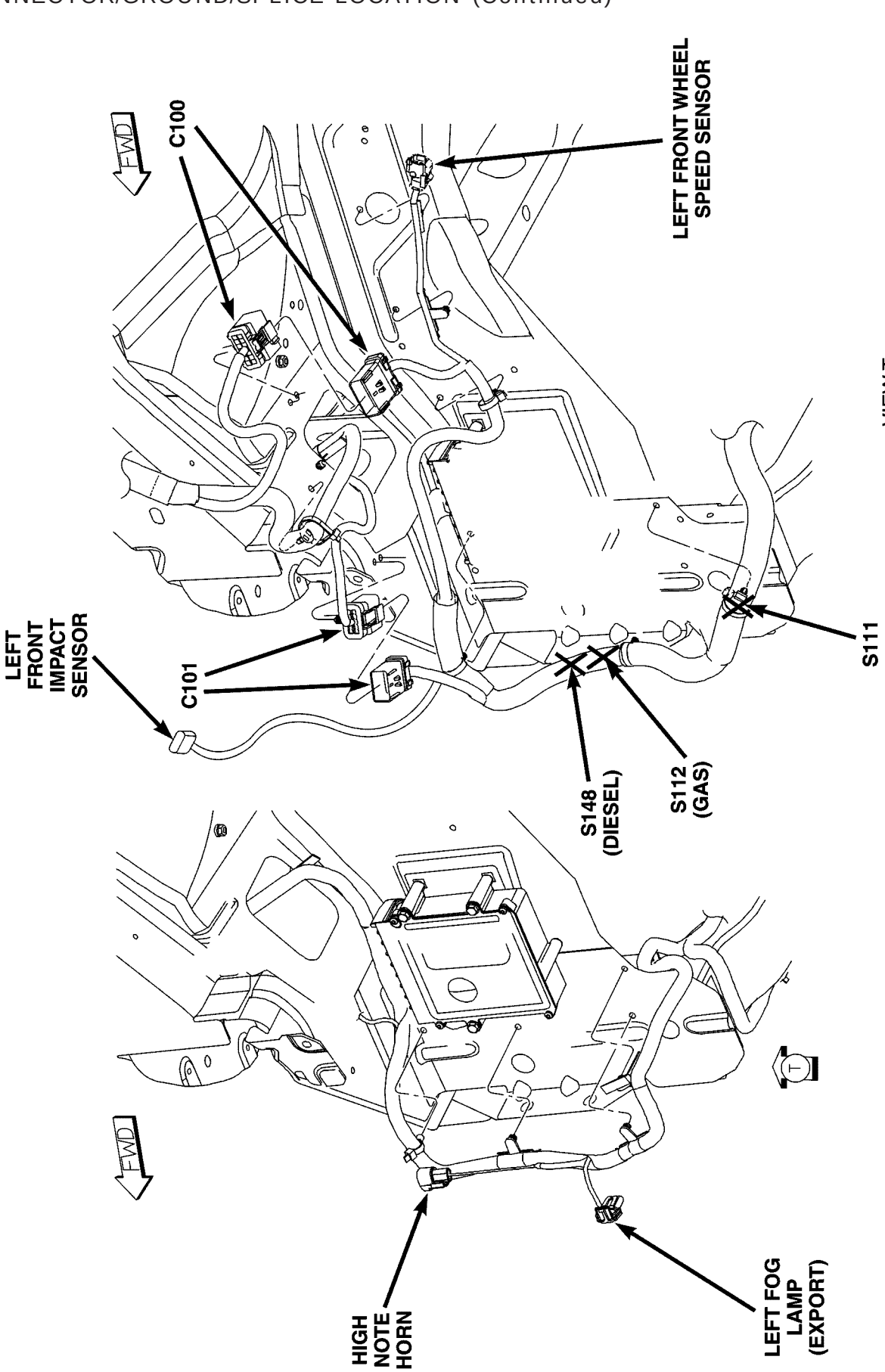

Fig. 5 LEFT FENDER SHIELD

CONNECTOR/GROUND/SPLICE LOCATION (Continued)

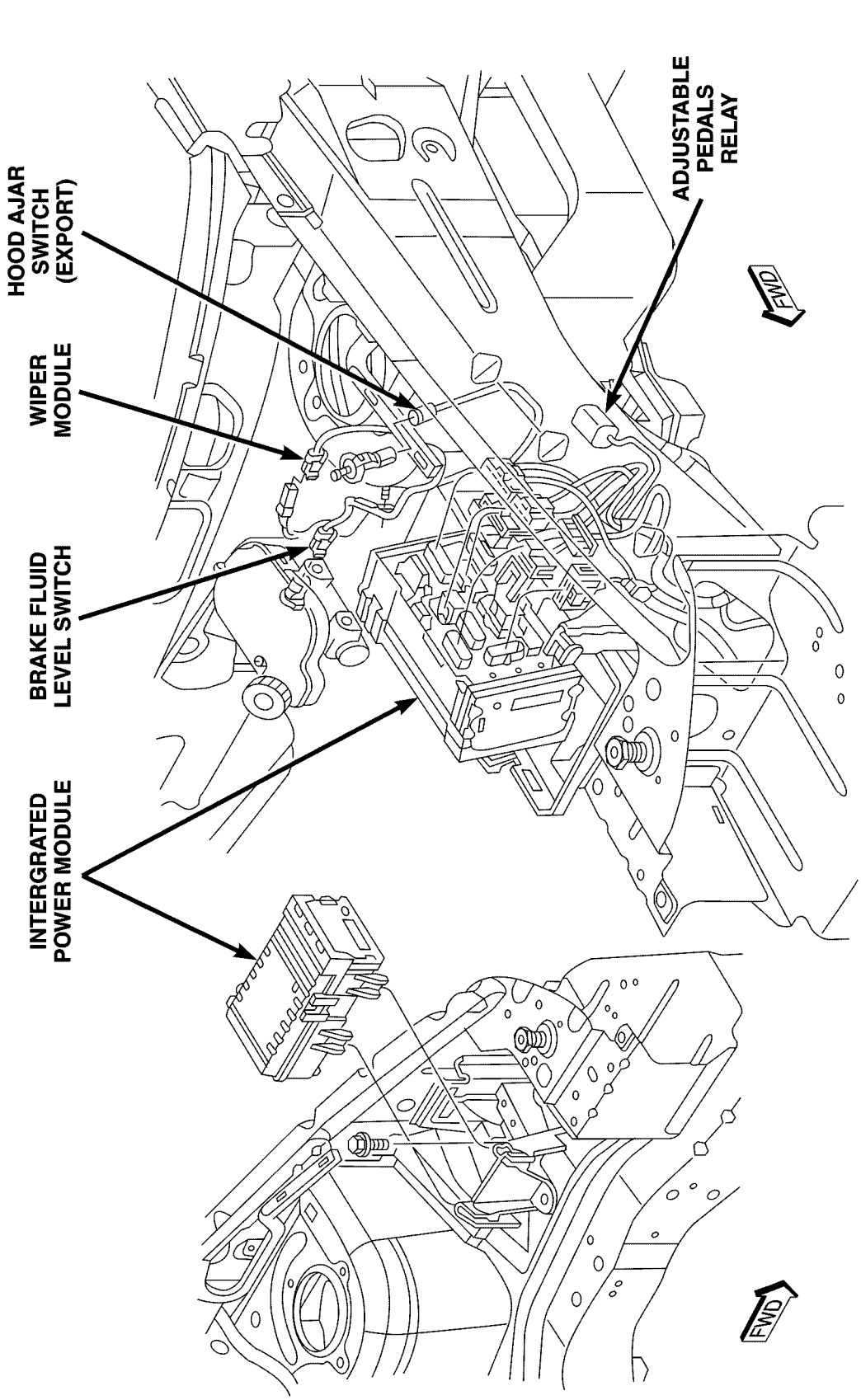

Fig. 6 LEFT SIDE ENGINE COMPARTMENT

CONNECTOR/GROUND/SPLICE LOCATION (Continued)

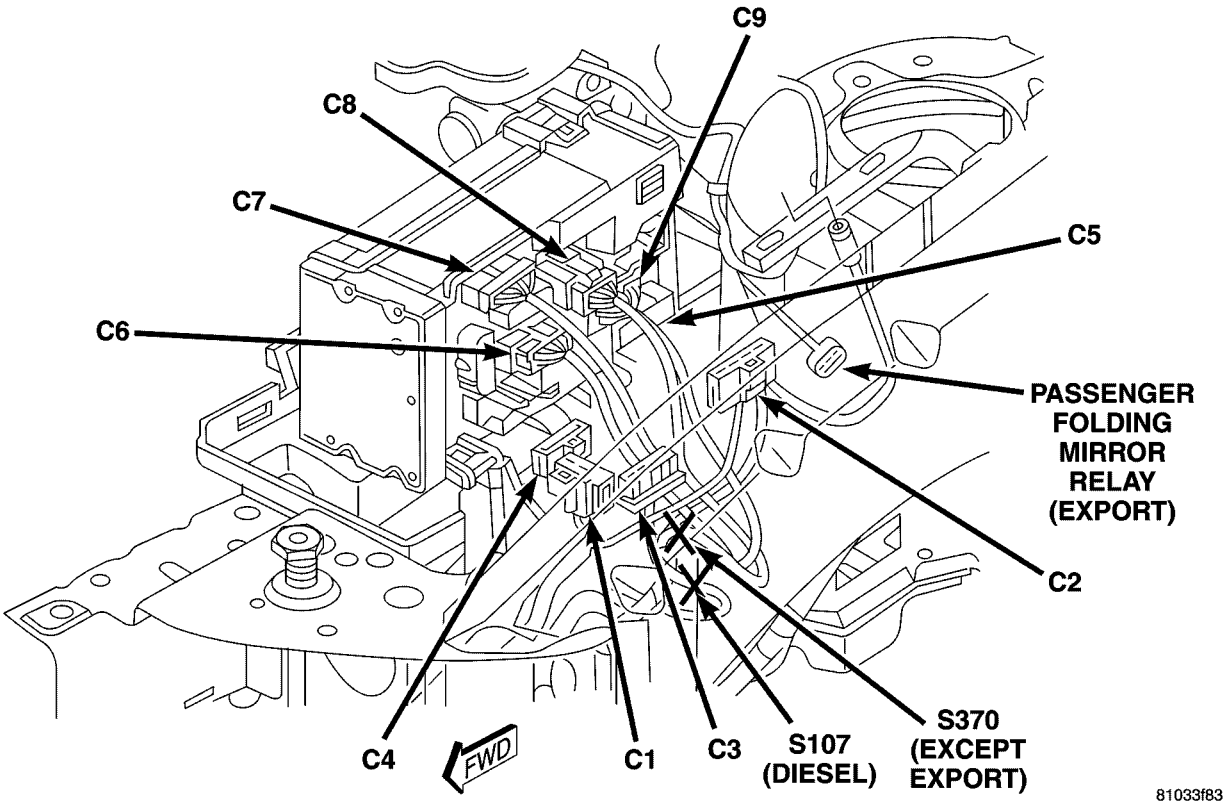

Fig. 7 INTEGRATED POWER MODULE

CONNECTOR/GROUND/SPLICE LOCATION (Continued)

80bd2f82

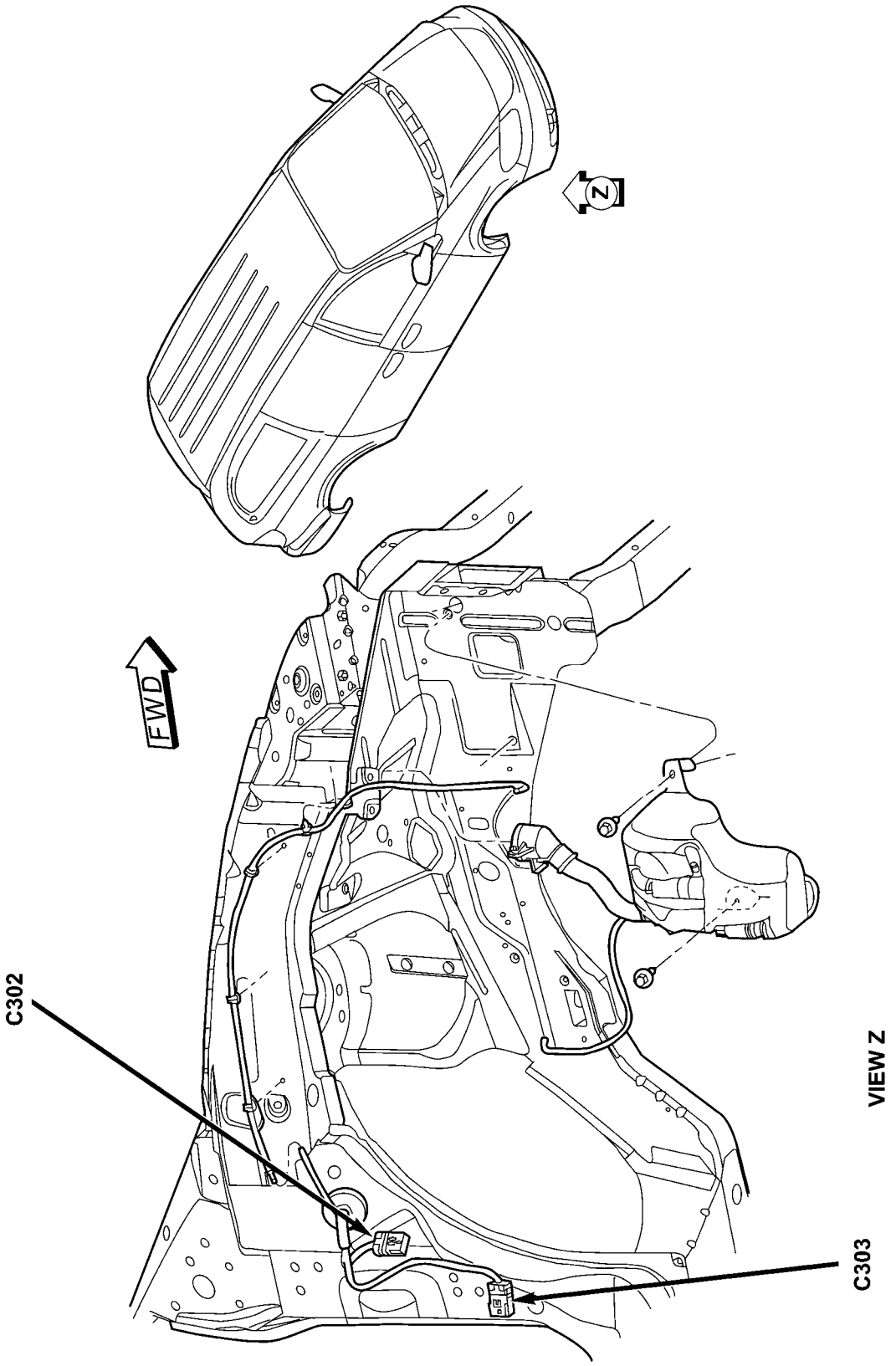

Fig. 8 RIGHT FRONT WHEEL HOUSING

CONNECTOR/GROUND/SPLICE LOCATION (Continued)

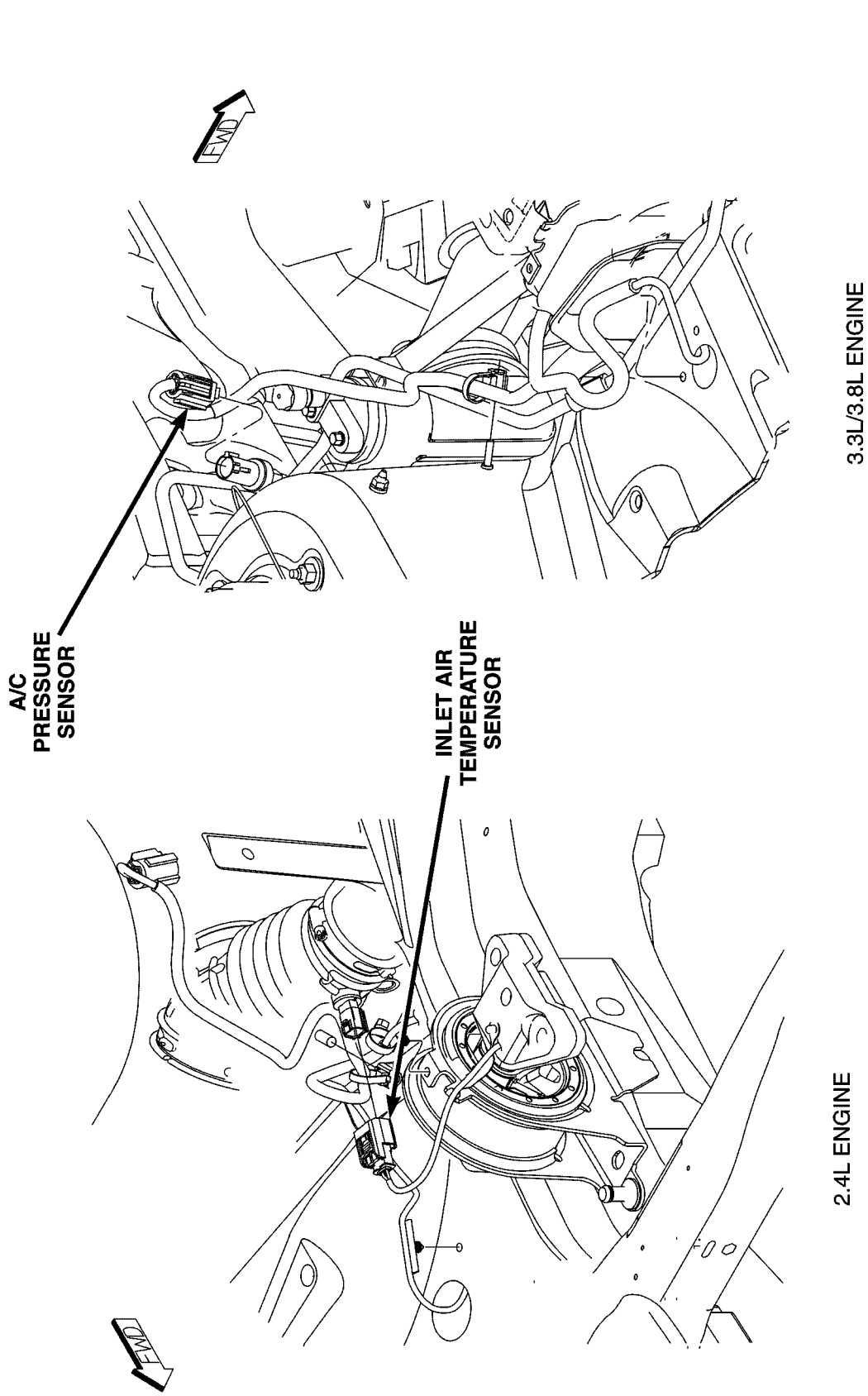

Fig. 9 INLET AIR SENSORS

CONNECTOR/GROUND/SPLICE LOCATION (Continued)

81033fc5

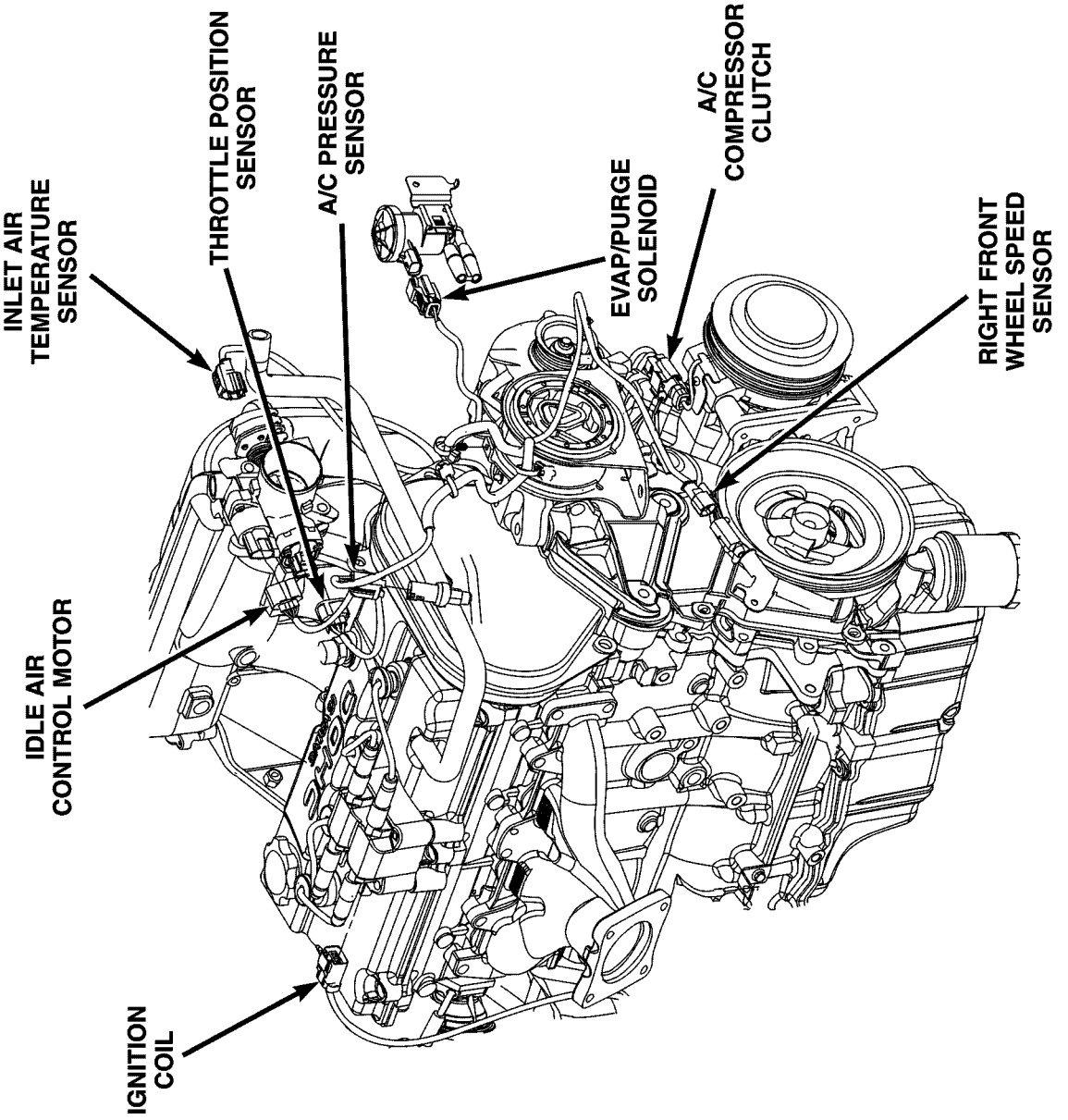

Fig. 10 2.4 LITER ENGINE CONNECTORS REAR

CONNECTOR/GROUND/SPLICE LOCATION (Continued)

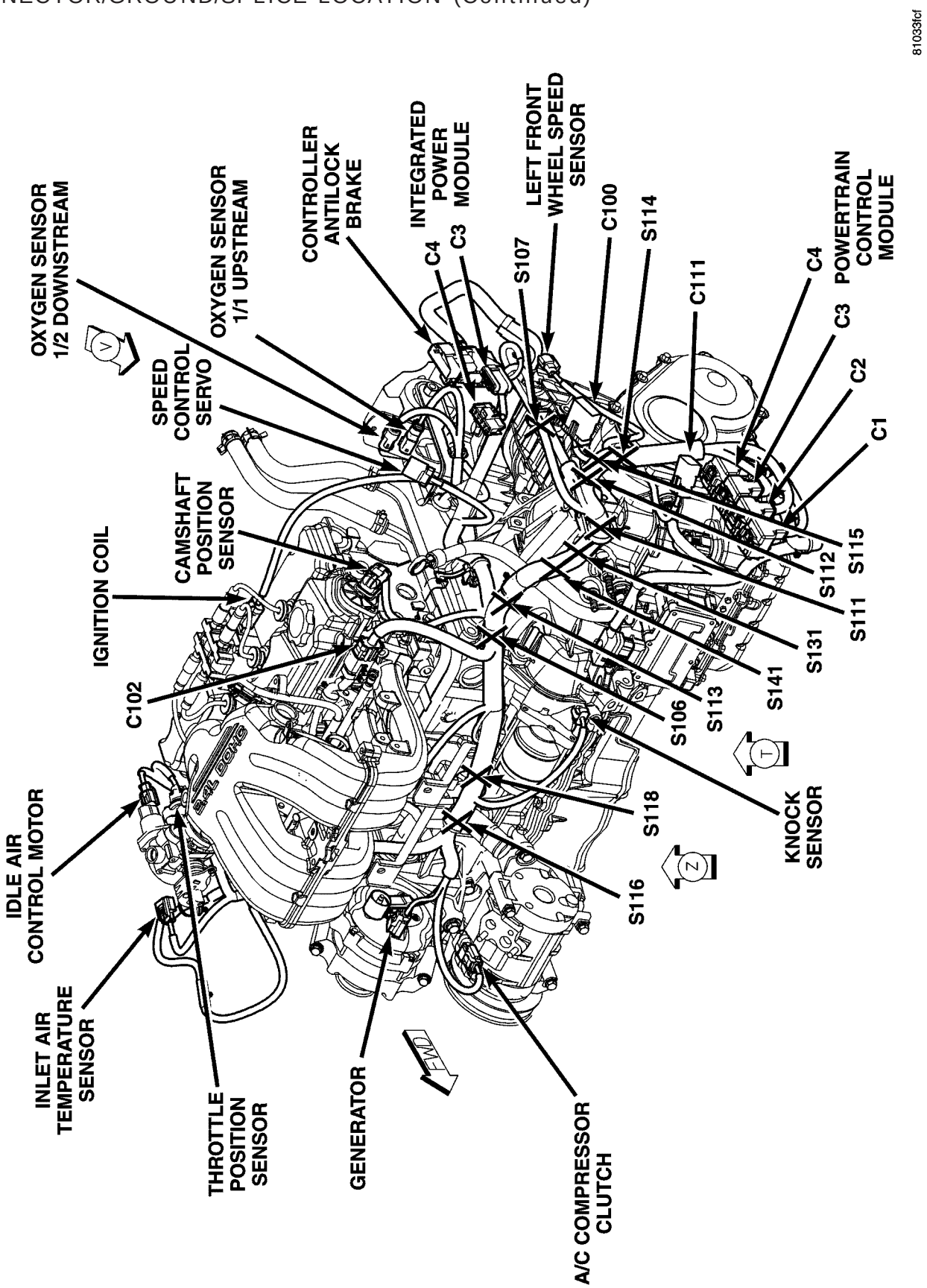

Fig. 11 2.4 LITER ENGINE FRONT

CONNECTOR/GROUND/SPLICE LOCATION (Continued)

8103426c

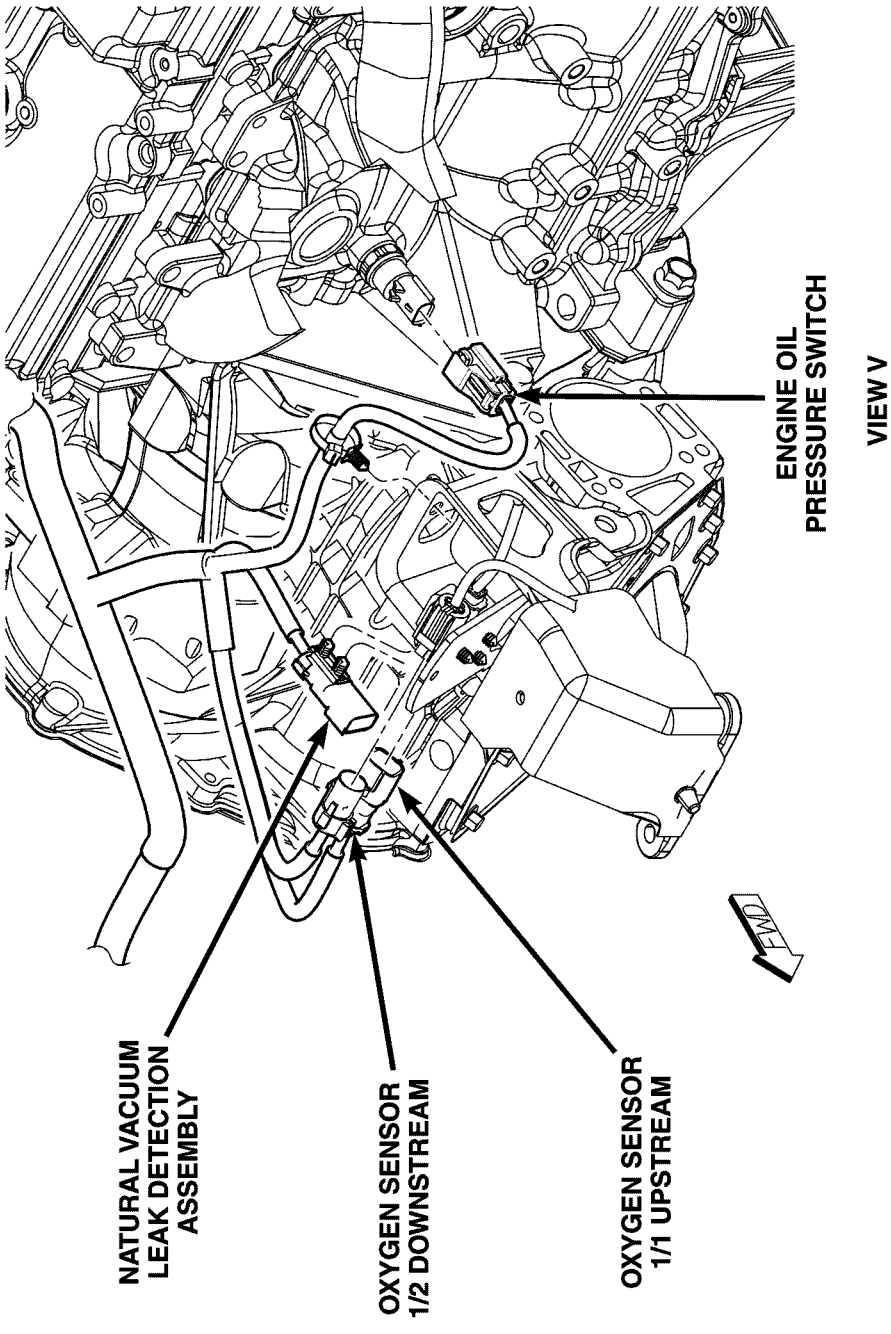

Fig. 12 OXYGEN SENSORS

CONNECTOR/GROUND/SPLICE LOCATION (Continued)

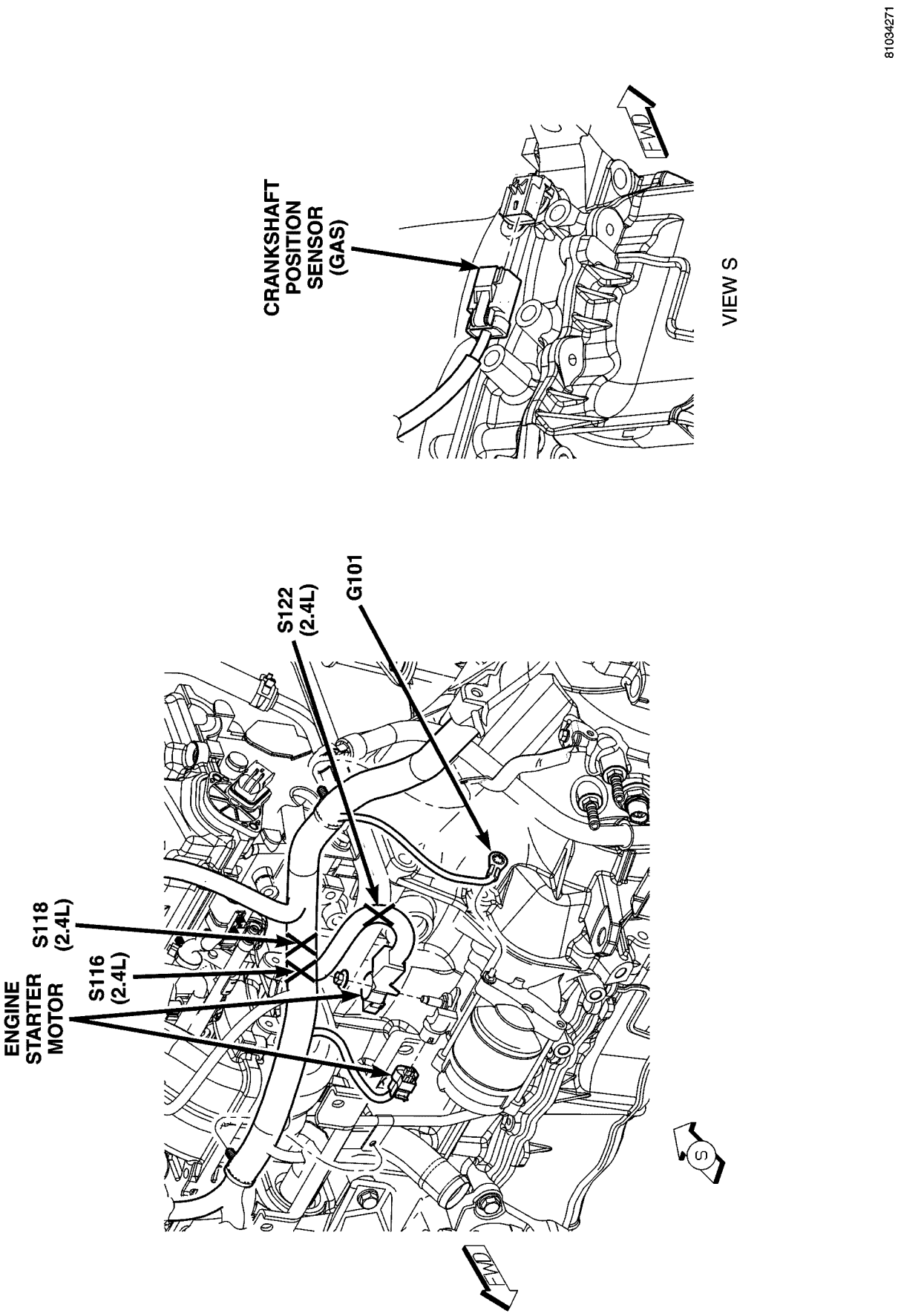

Fig. 13 STARTER CONNECTORS

CONNECTOR/GROUND/SPLICE LOCATION (Continued)

81034278

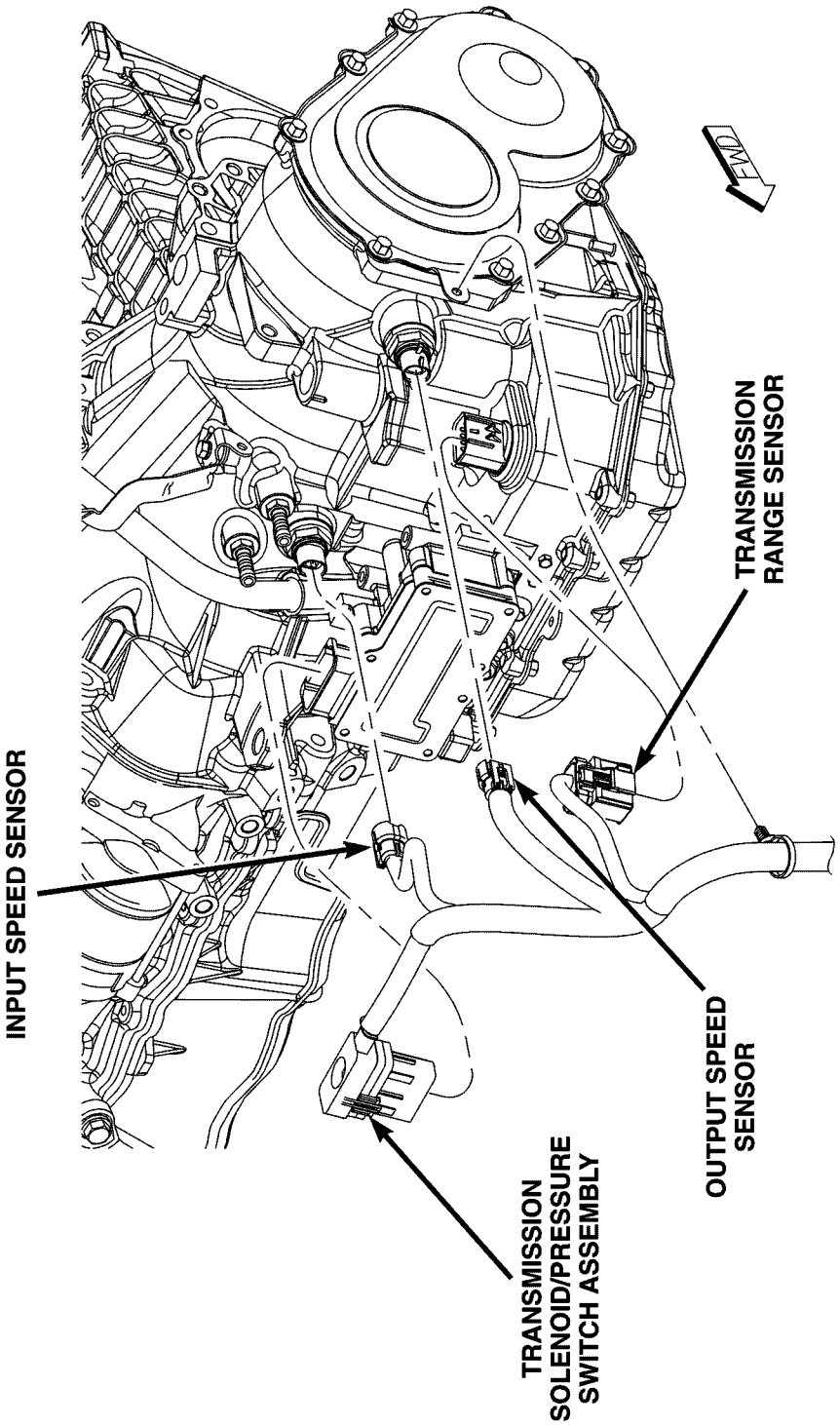

Fig. 14 TRANSMISSION CONNECTORS

CONNECTOR/GROUND/SPLICE LOCATION (Continued)

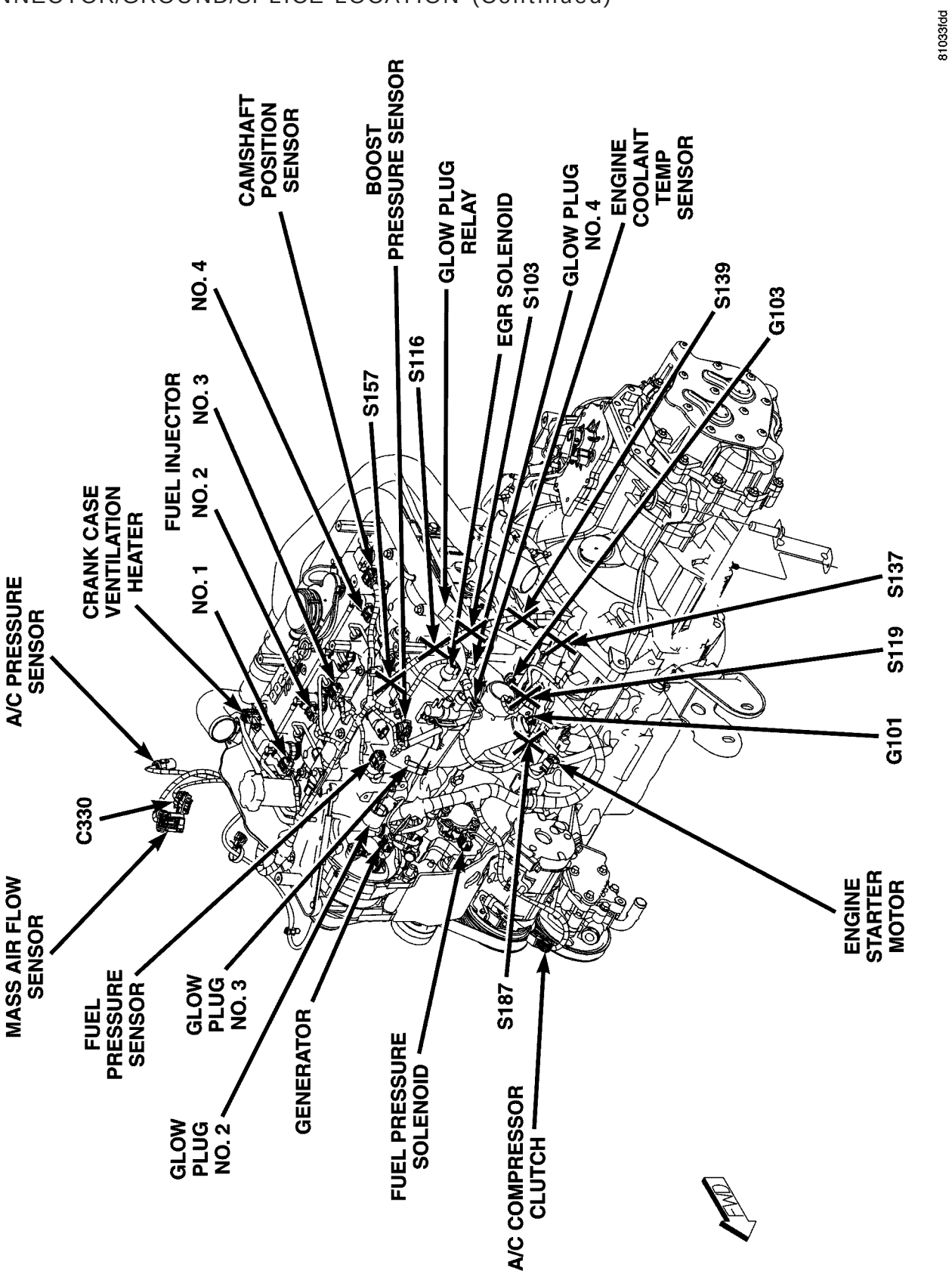

Fig. 15 2.5 LITER DIESEL ENGINE FRONT

CONNECTOR/GROUND/SPLICE LOCATION (Continued)

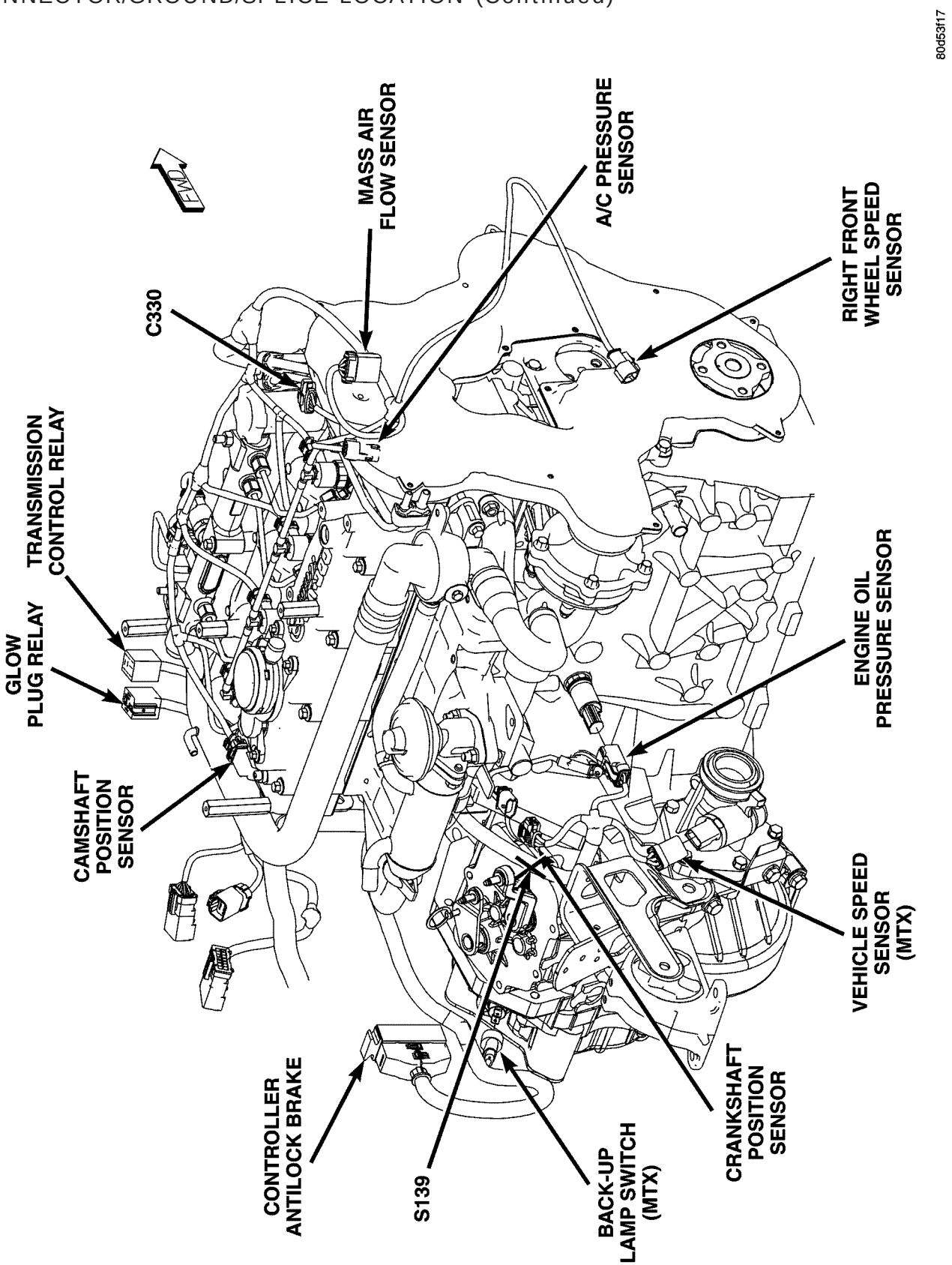

Fig. 16 2.5 LITER DIESEL ENGINE REAR

CONNECTOR/GROUND/SPLICE LOCATION (Continued)

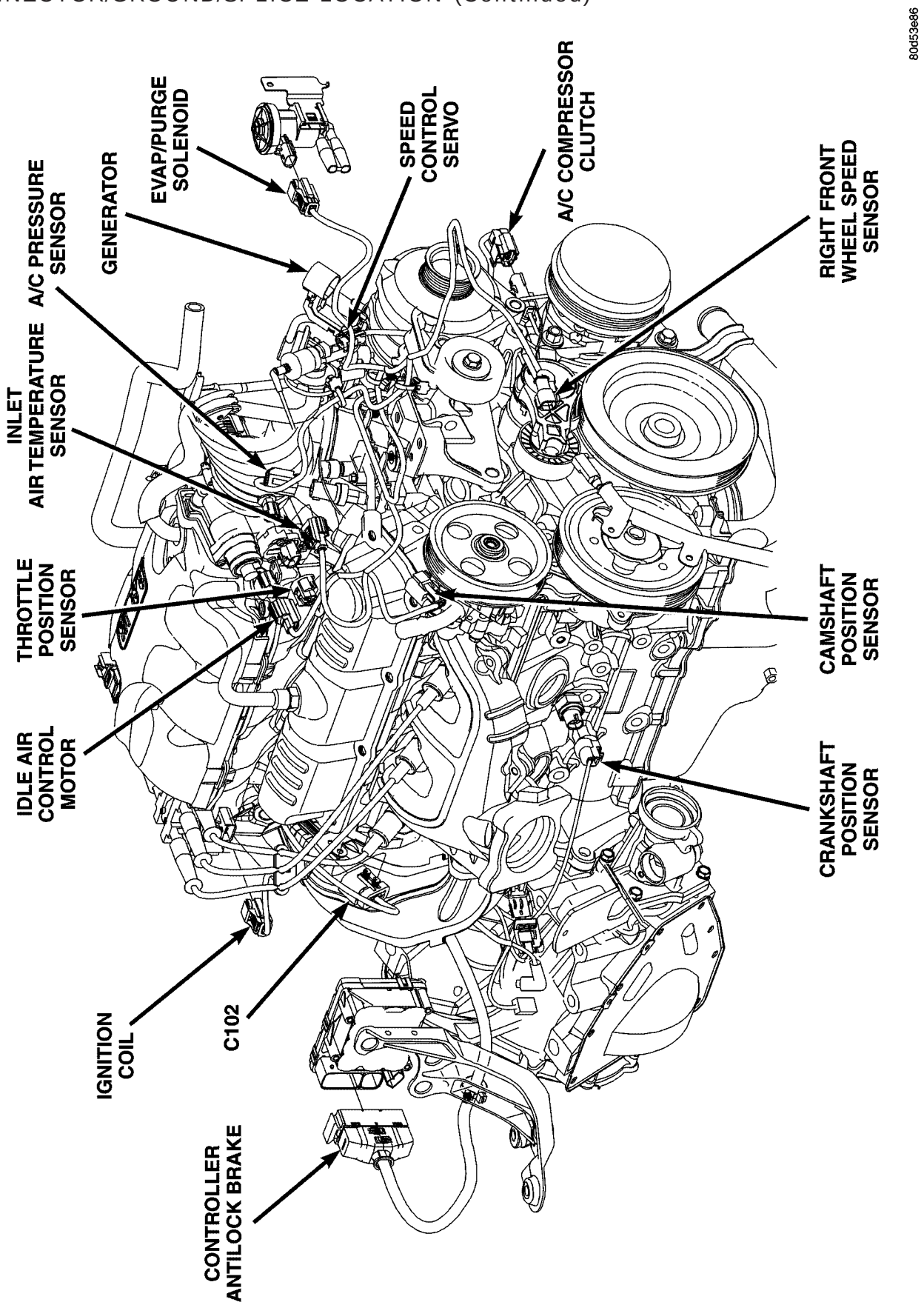

Fig. 17 3.3-3.8 LITER ENGINE REAR

CONNECTOR/GROUND/SPLICE LOCATION (Continued)

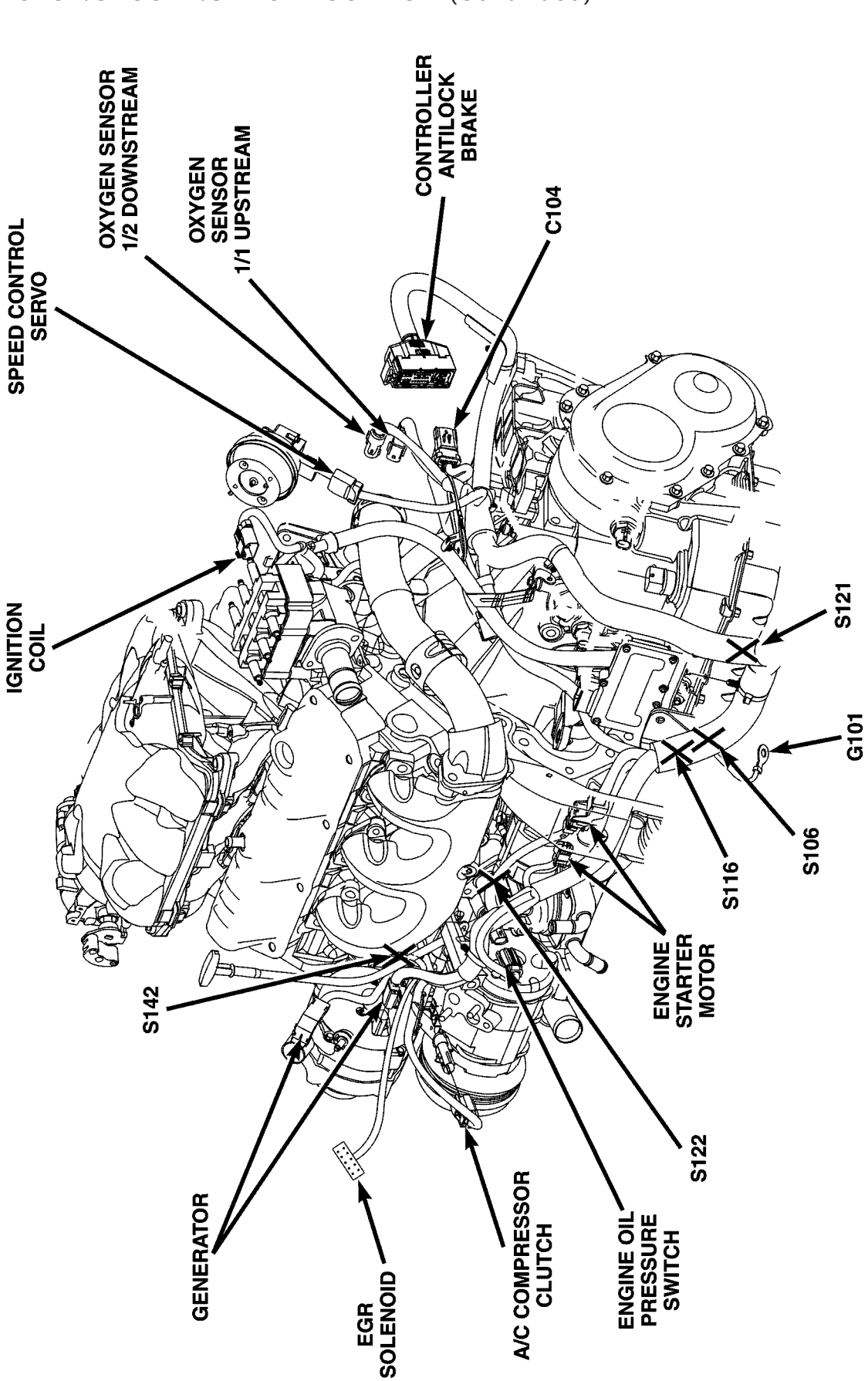

Fig. 18 3.3-3.8 LITER ENGINE FRONT

CONNECTOR/GROUND/SPLICE LOCATION (Continued)

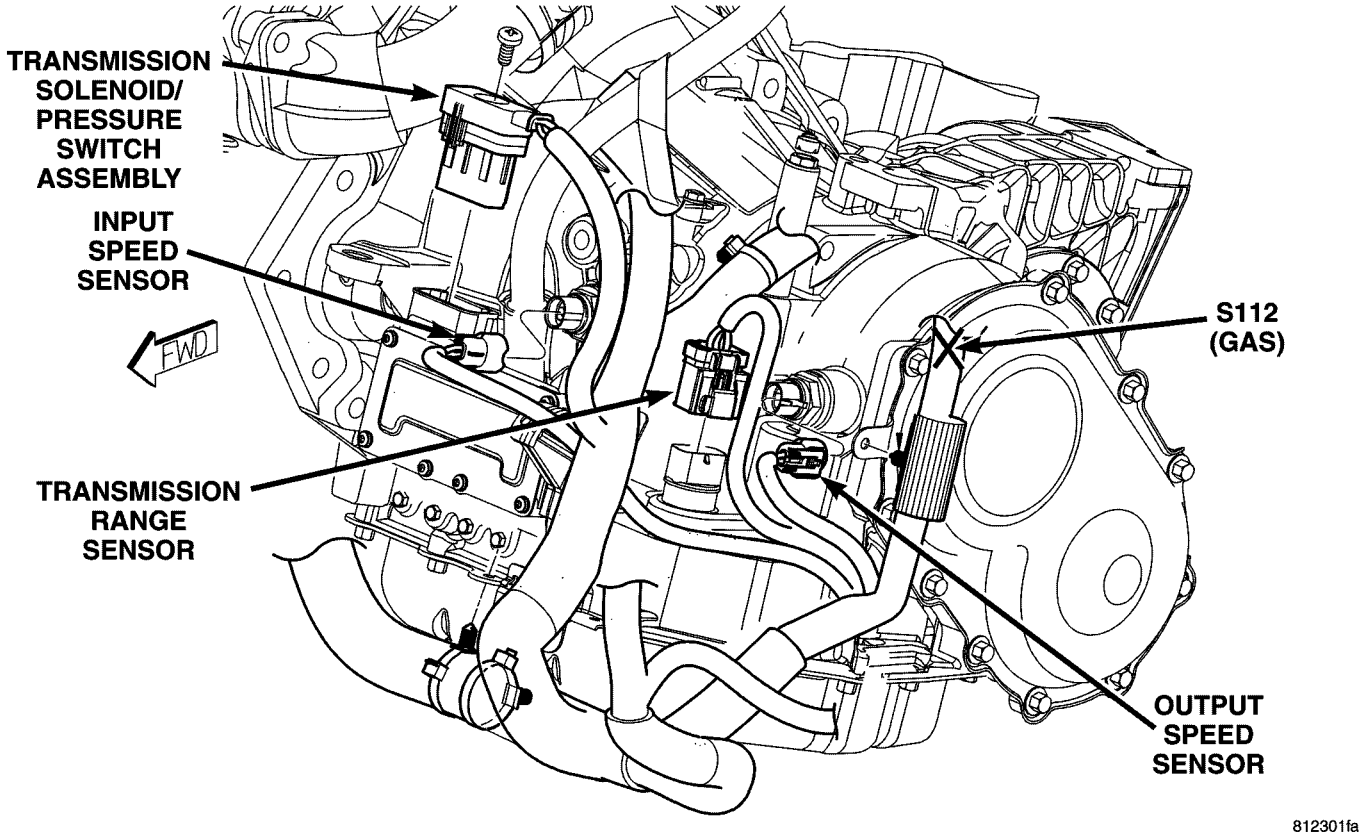

Fig. 19 AUTOMATIC TRANSMISSION

CONNECTOR/GROUND/SPLICE LOCATION (Continued)

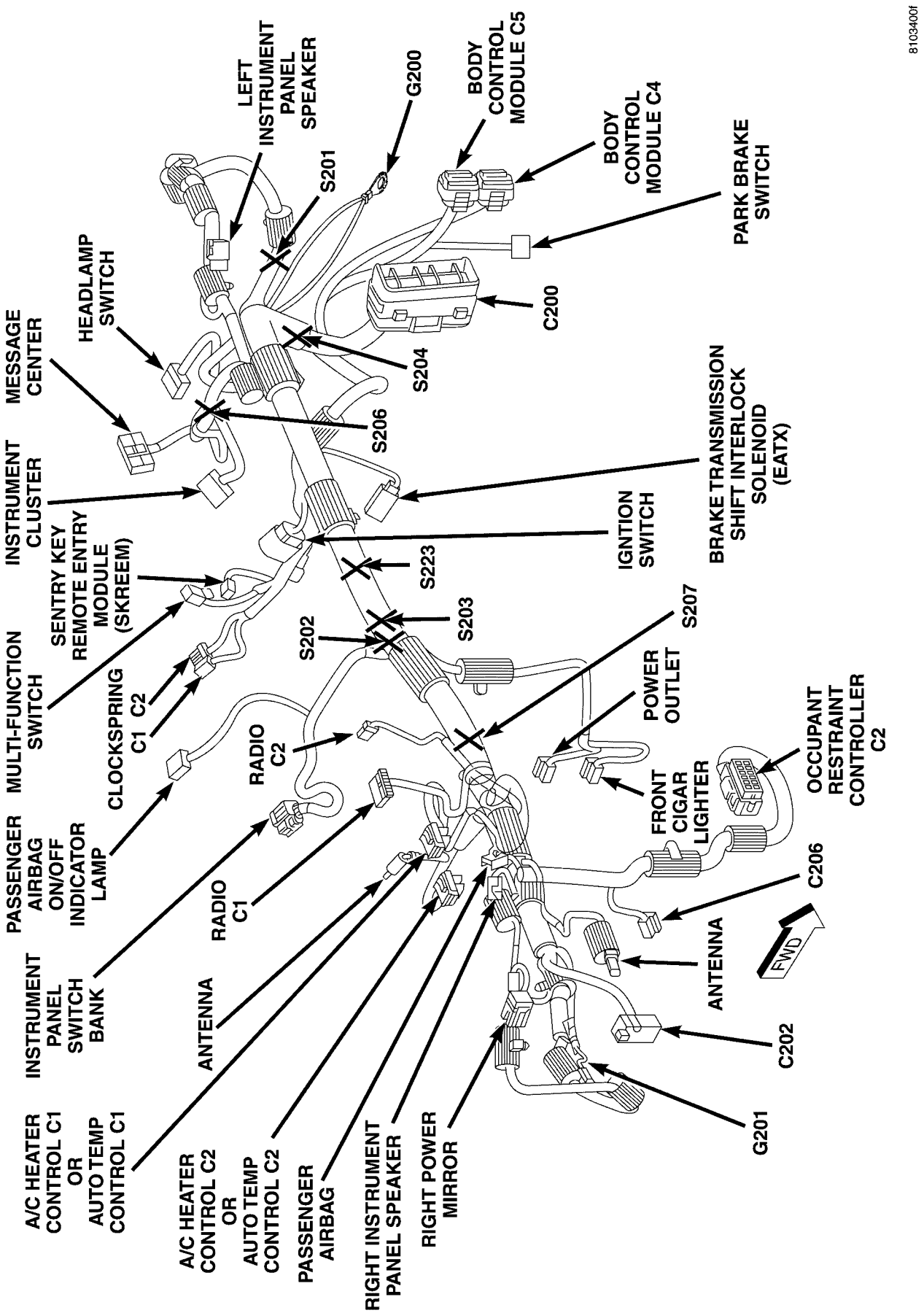

Fig. 20 INSTRUMENT PANEL HARNESS LHD

CONNECTOR/GROUND/SPLICE LOCATION (Continued)

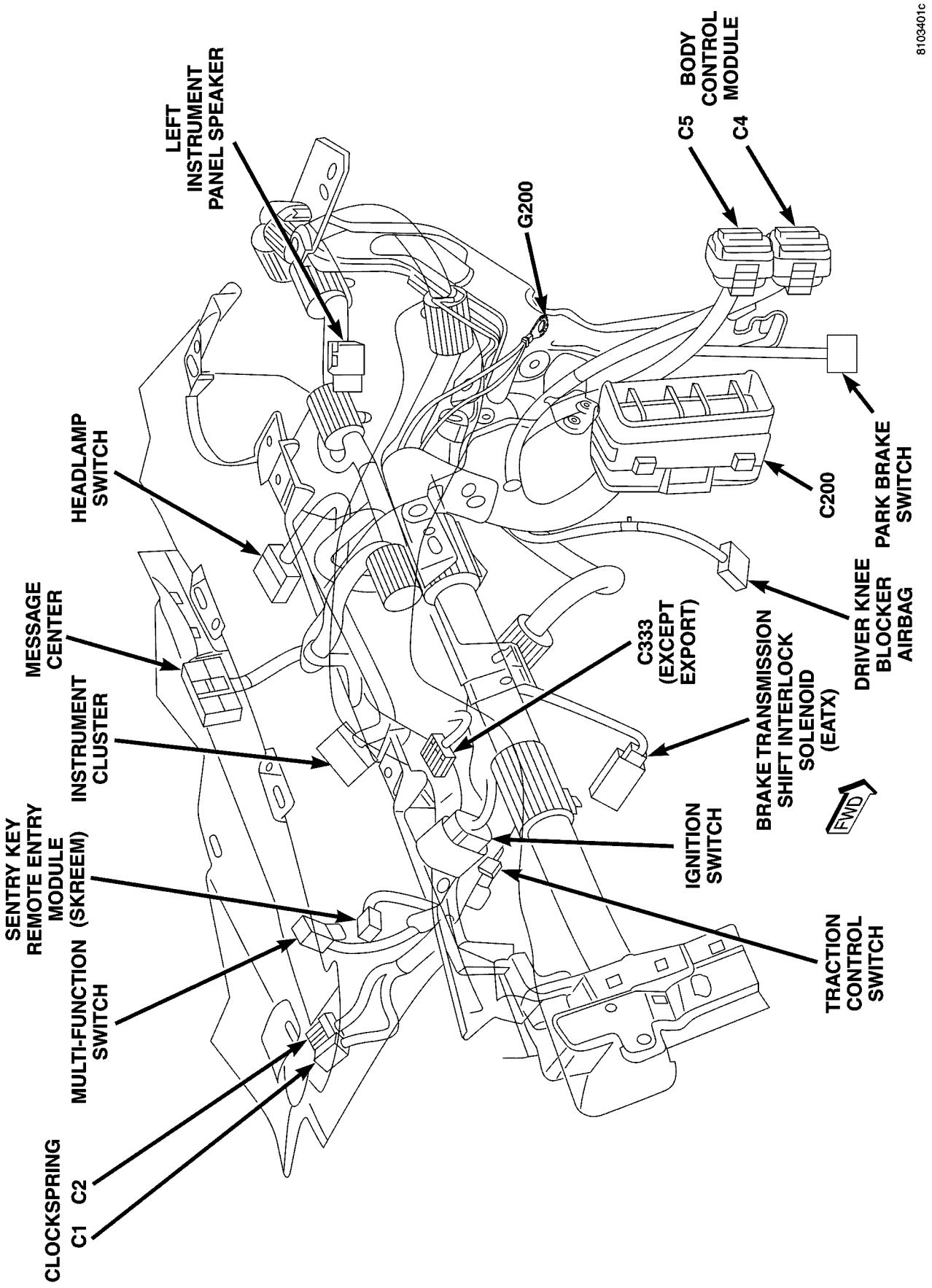

Fig. 21 LEFT SIDE INSTRUMENT PANEL LHD

CONNECTOR/GROUND/SPLICE LOCATION (Continued)

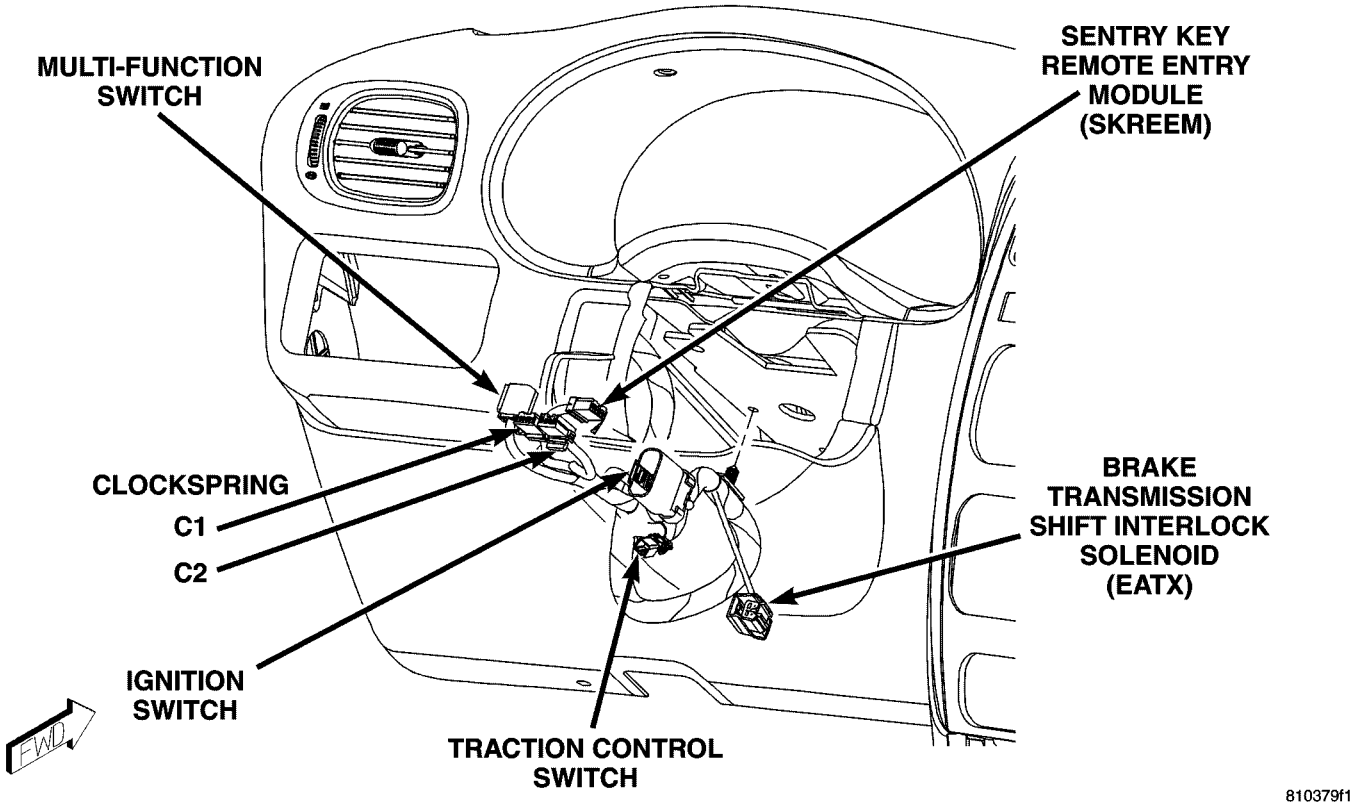

Fig. 22 STEERING COLUMN

CONNECTOR/GROUND/SPLICE LOCATION (Continued)

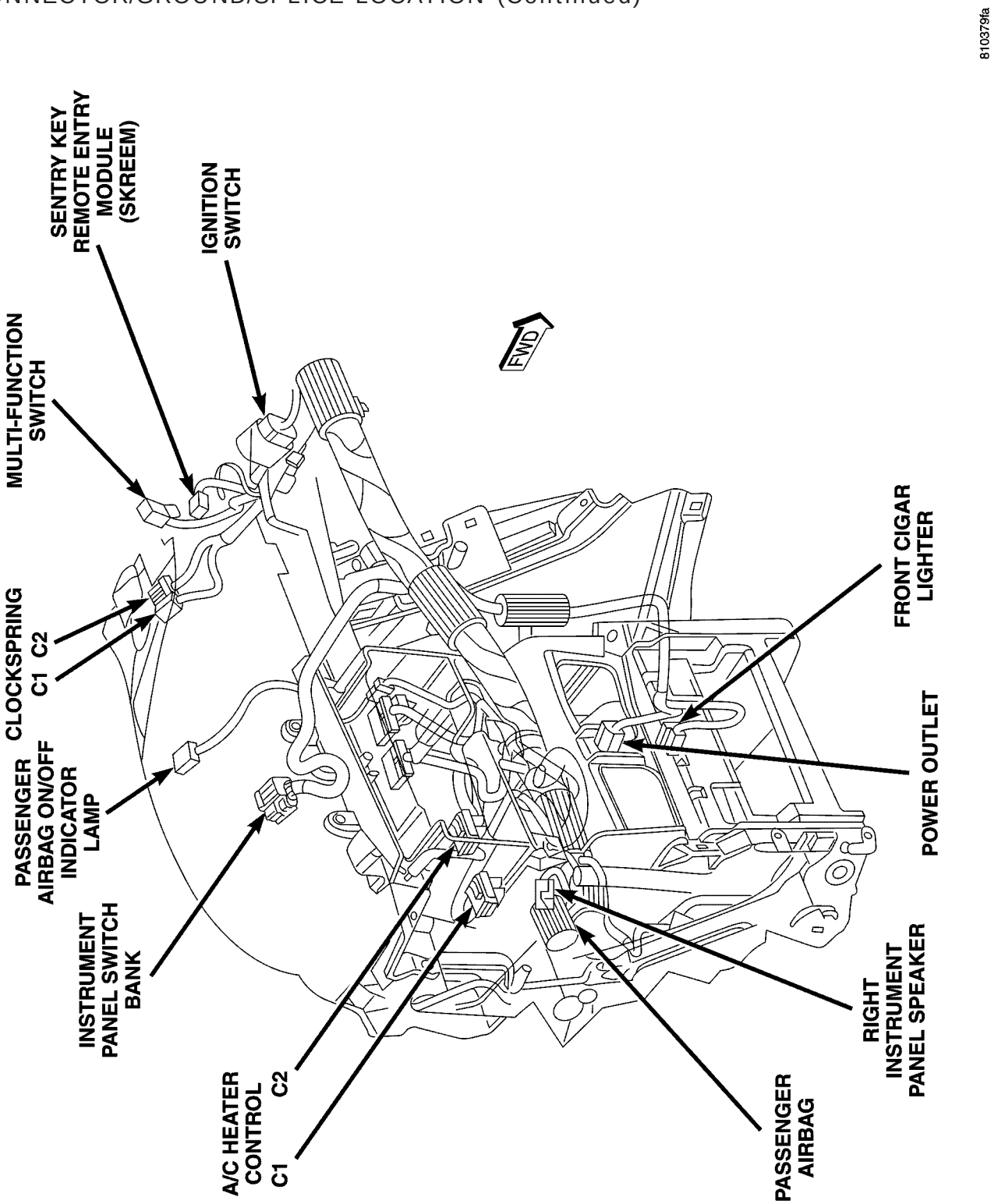

Fig. 23 CENTER INSTRUMENT PANEL

CONNECTOR/GROUND/SPLICE LOCATION (Continued)

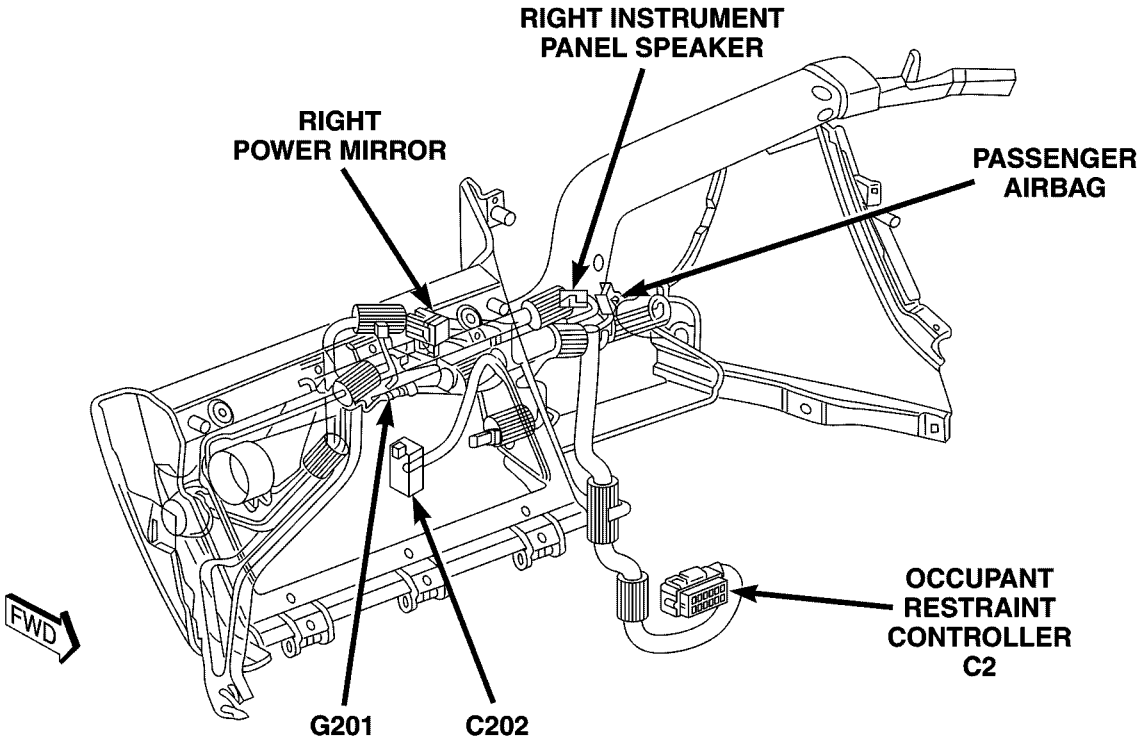

Fig. 24 RIGHT SIDE INSTRUMENT PANEL

CONNECTOR/GROUND/SPLICE LOCATION (Continued)

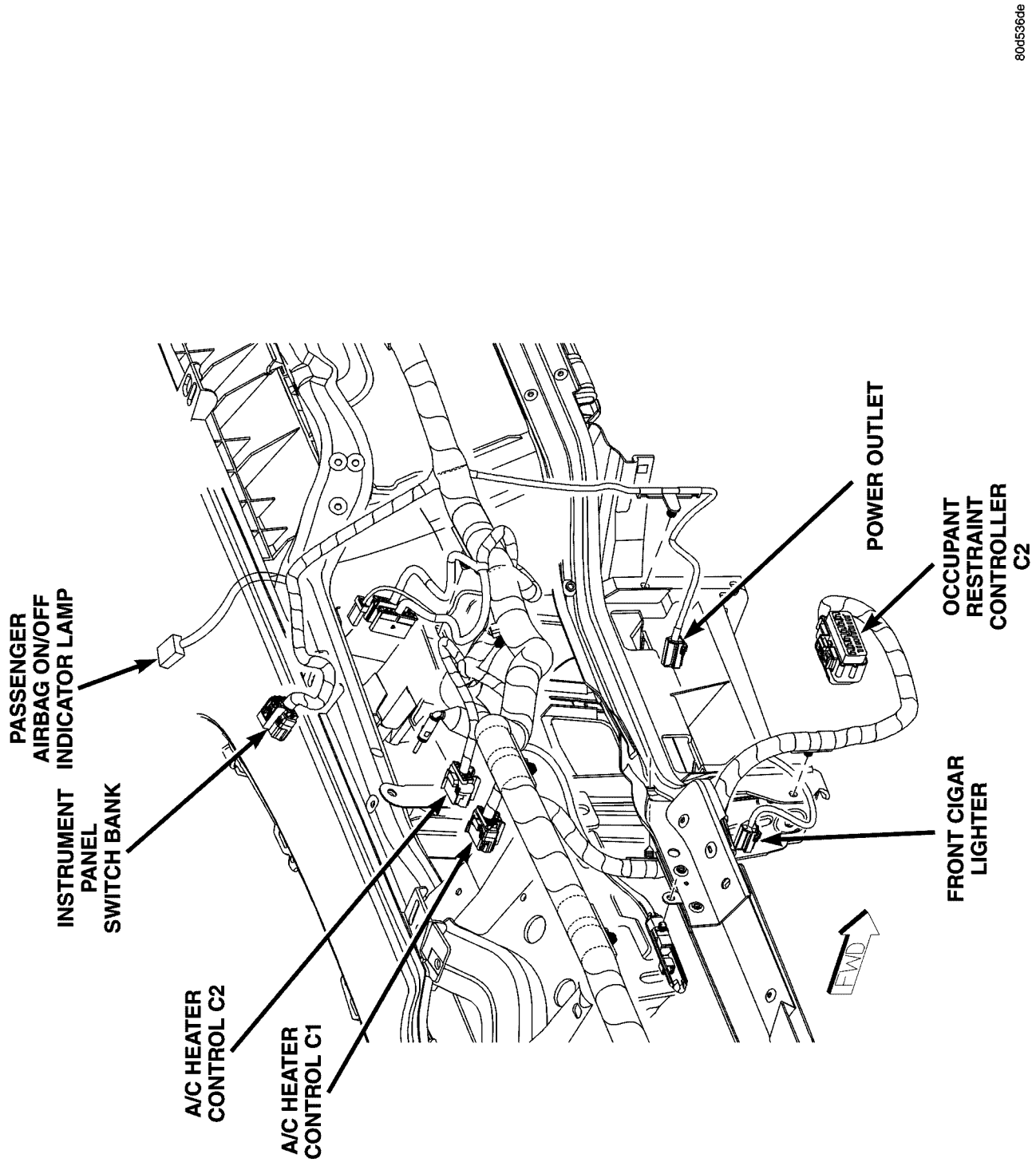

Fig. 25 CENTER INSTRUMENT PANEL RHD

CONNECTOR/GROUND/SPLICE LOCATION (Continued)

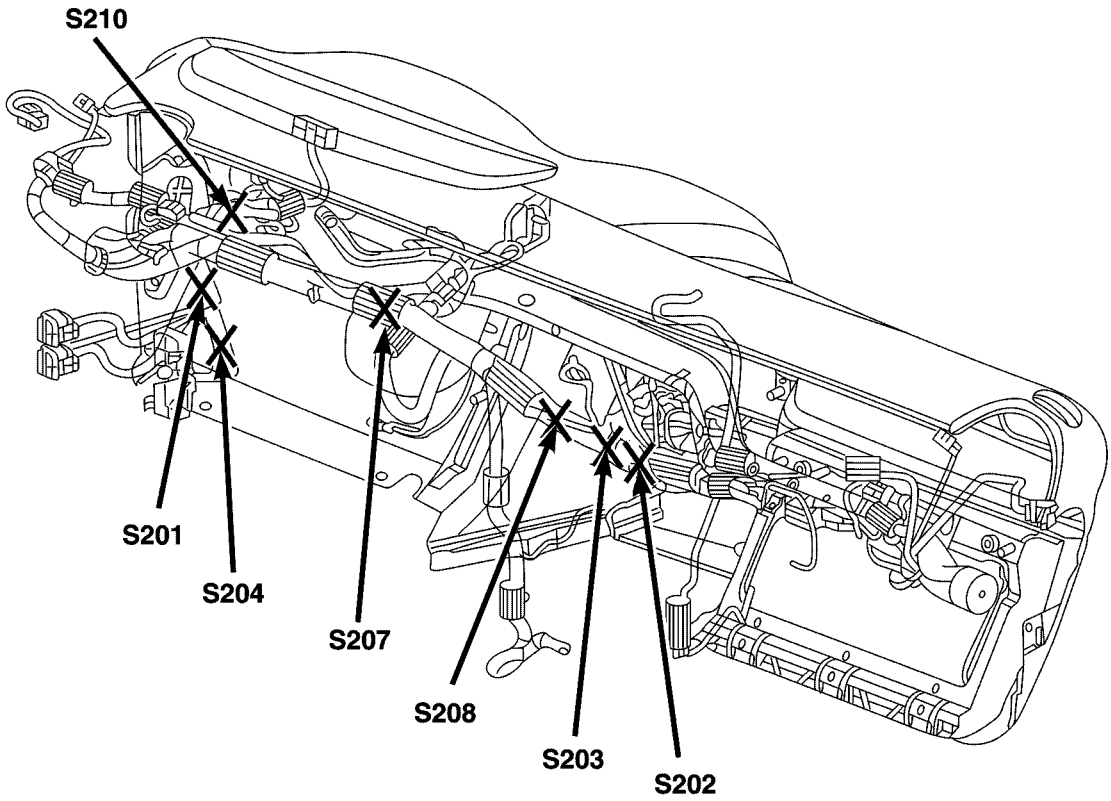

Fig. 26 INSTRUMENT PANEL RHD

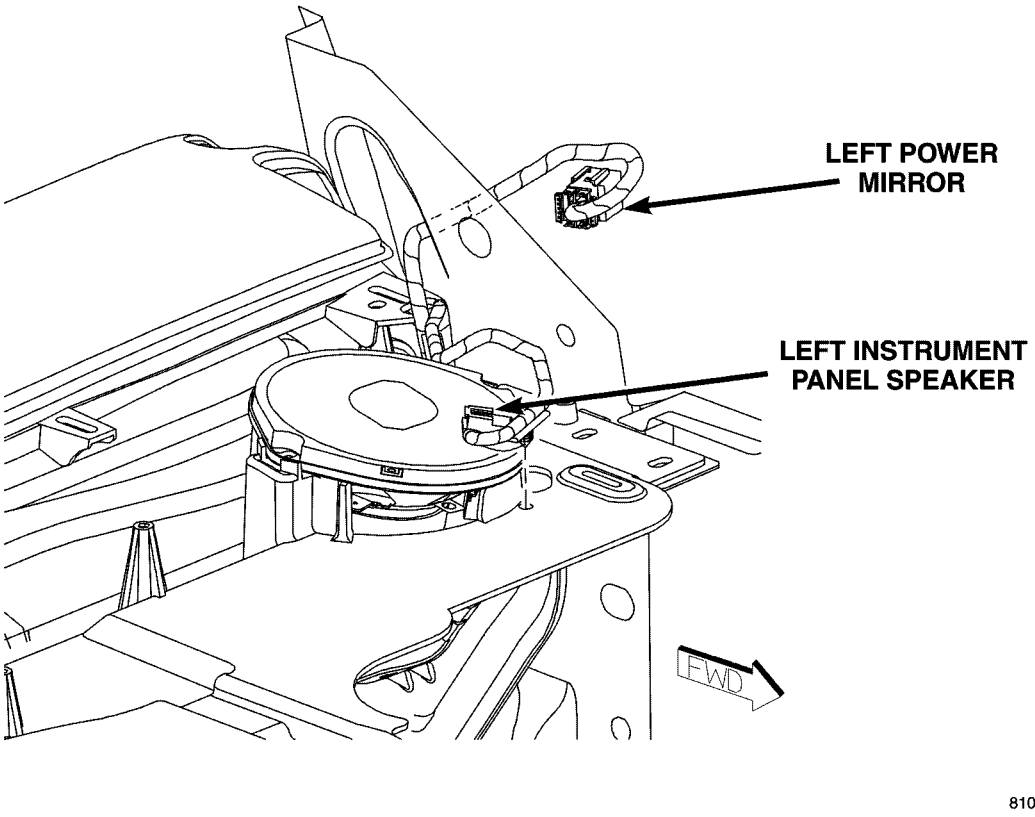

Fig. 27 LEFT SIDE INSTRUMENT PANEL UPPER RHD

CONNECTOR/GROUND/SPLICE LOCATION (Continued)

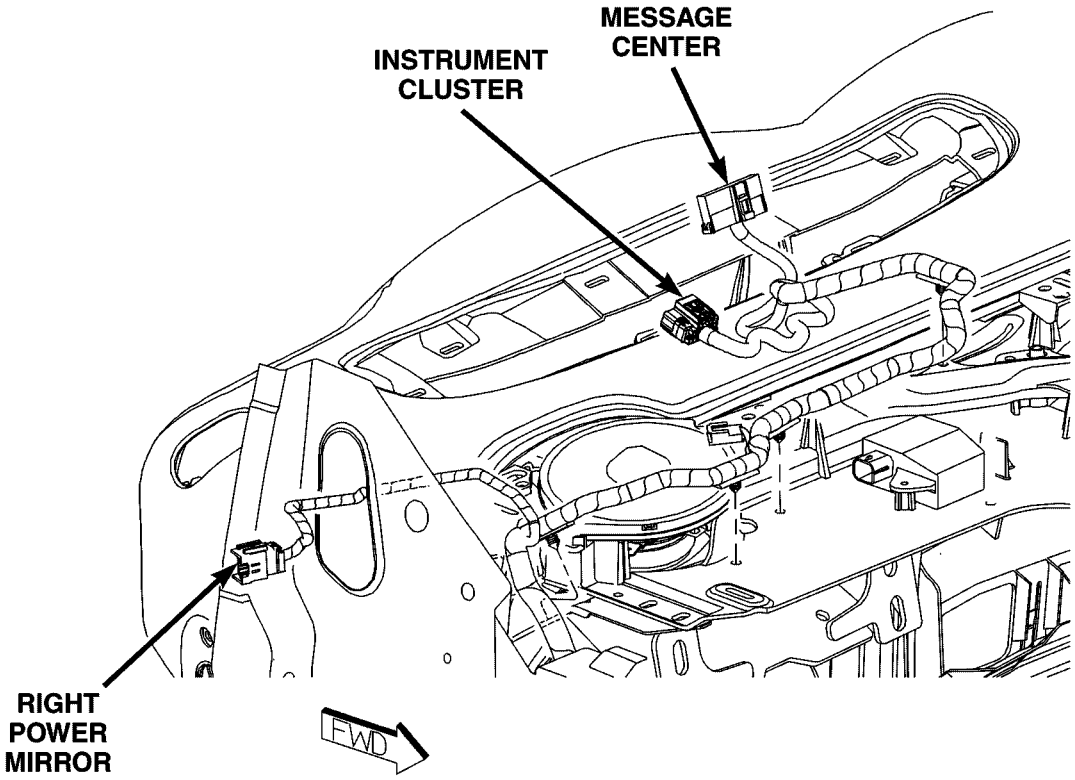

Fig. 28 RIGHT SIDE INSTRUMENT PANEL UPPER RHD

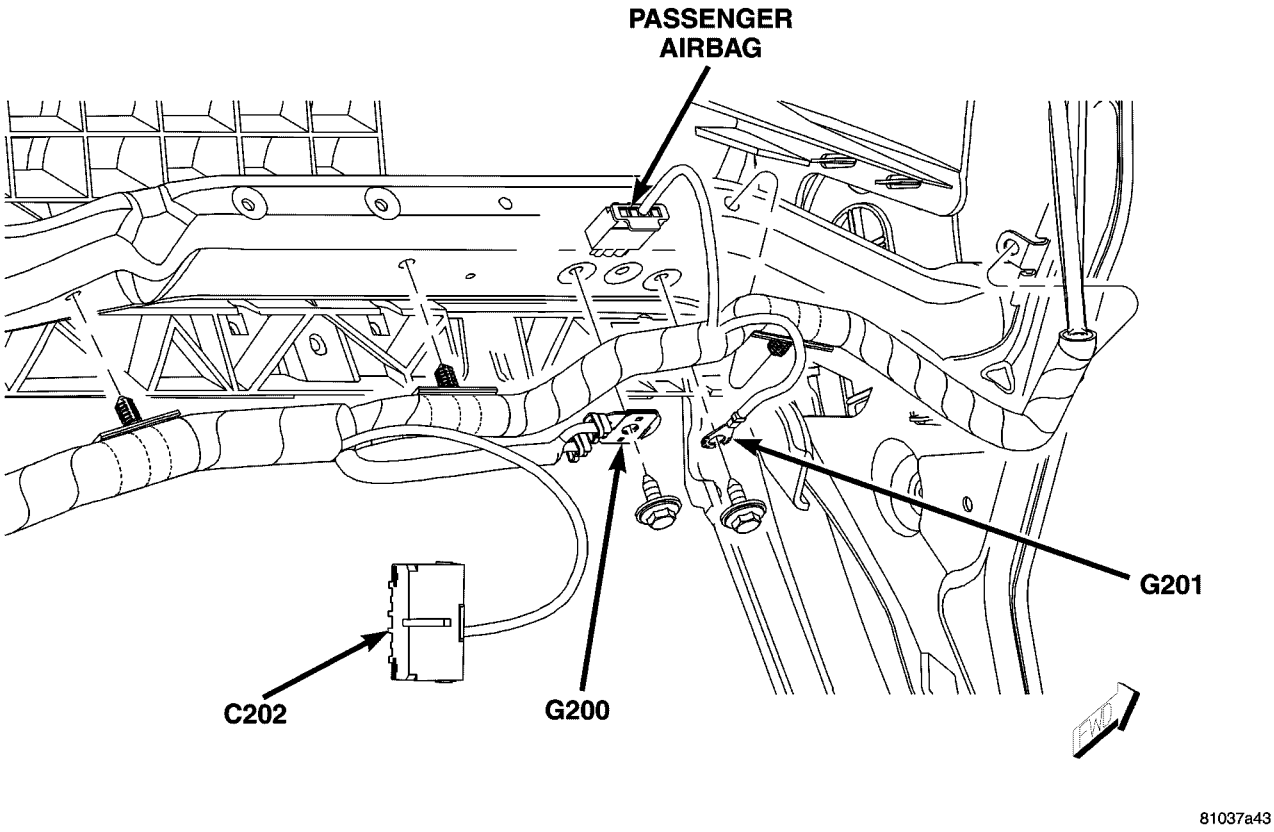

Fig. 29 LEFT SIDE INSTRUMENT PANEL LOWER RHD

CONNECTOR/GROUND/SPLICE LOCATION (Continued)

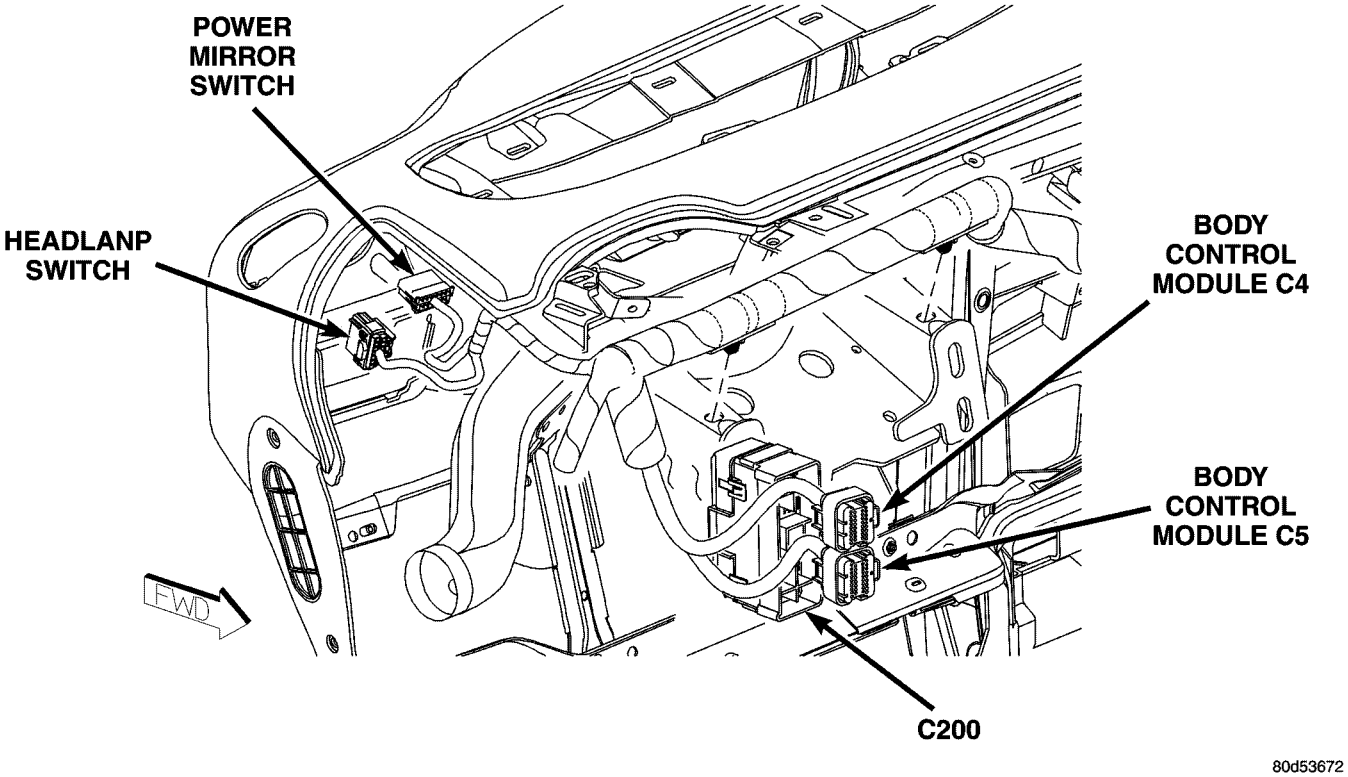

Fig. 30 RIGHT SIDE INSTRUMENT PANEL LOWER RHD

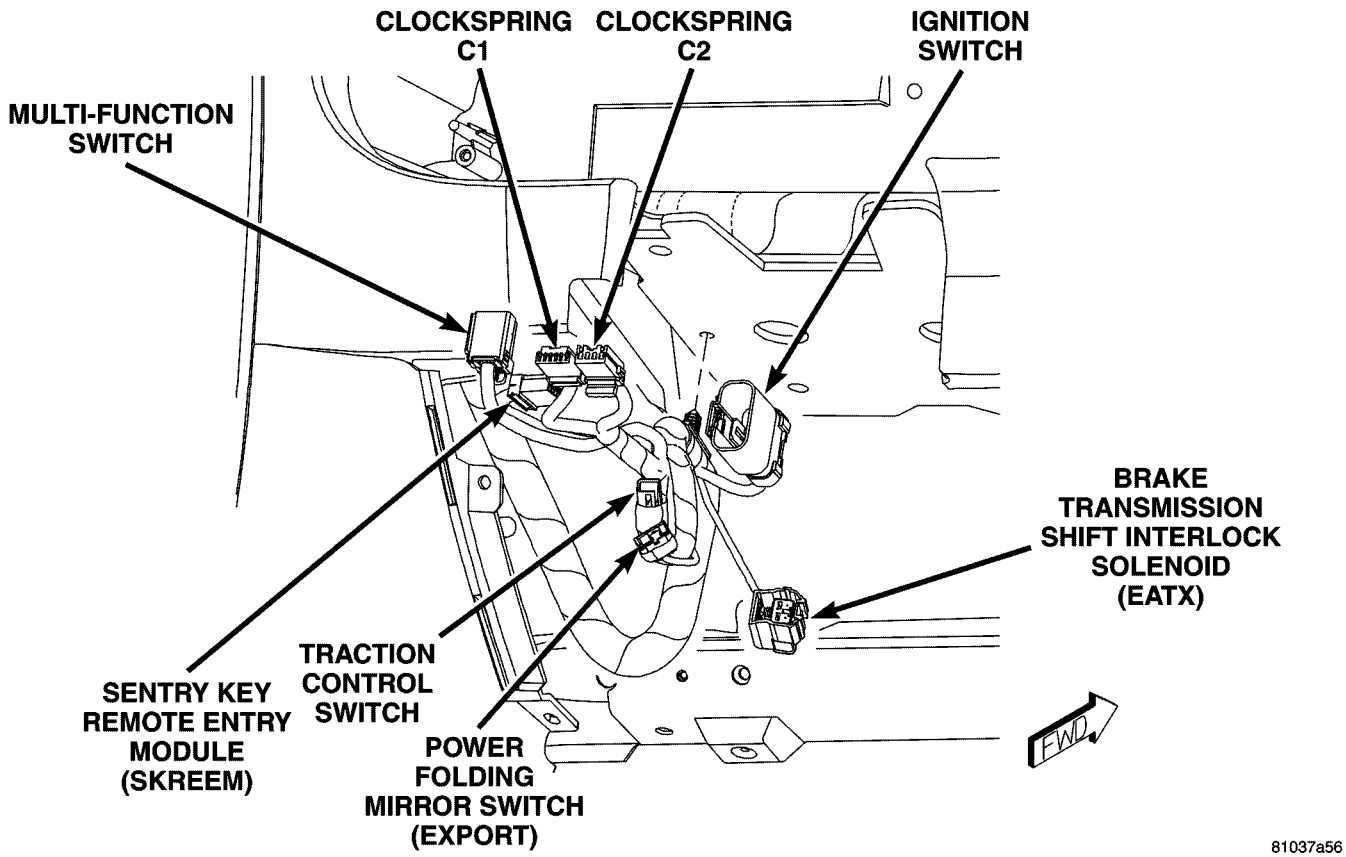

Fig. 31 STEERING COLUMN CONNECTORS RHD

CONNECTOR/GROUND/SPLICE LOCATION (Continued)

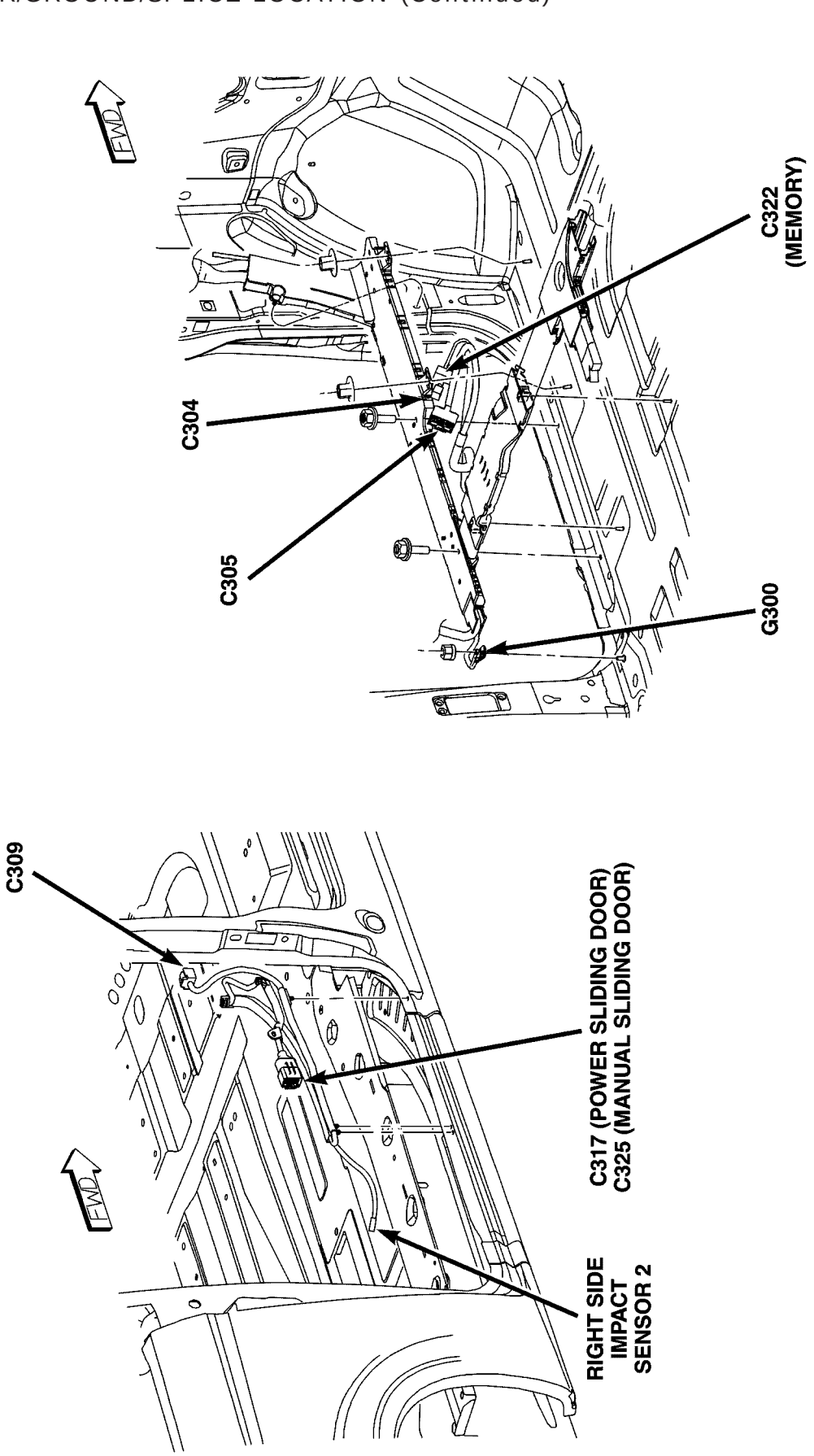

Fig. 32 LEFT SIDE BODY LHD

CONNECTOR/GROUND/SPLICE LOCATION (Continued)

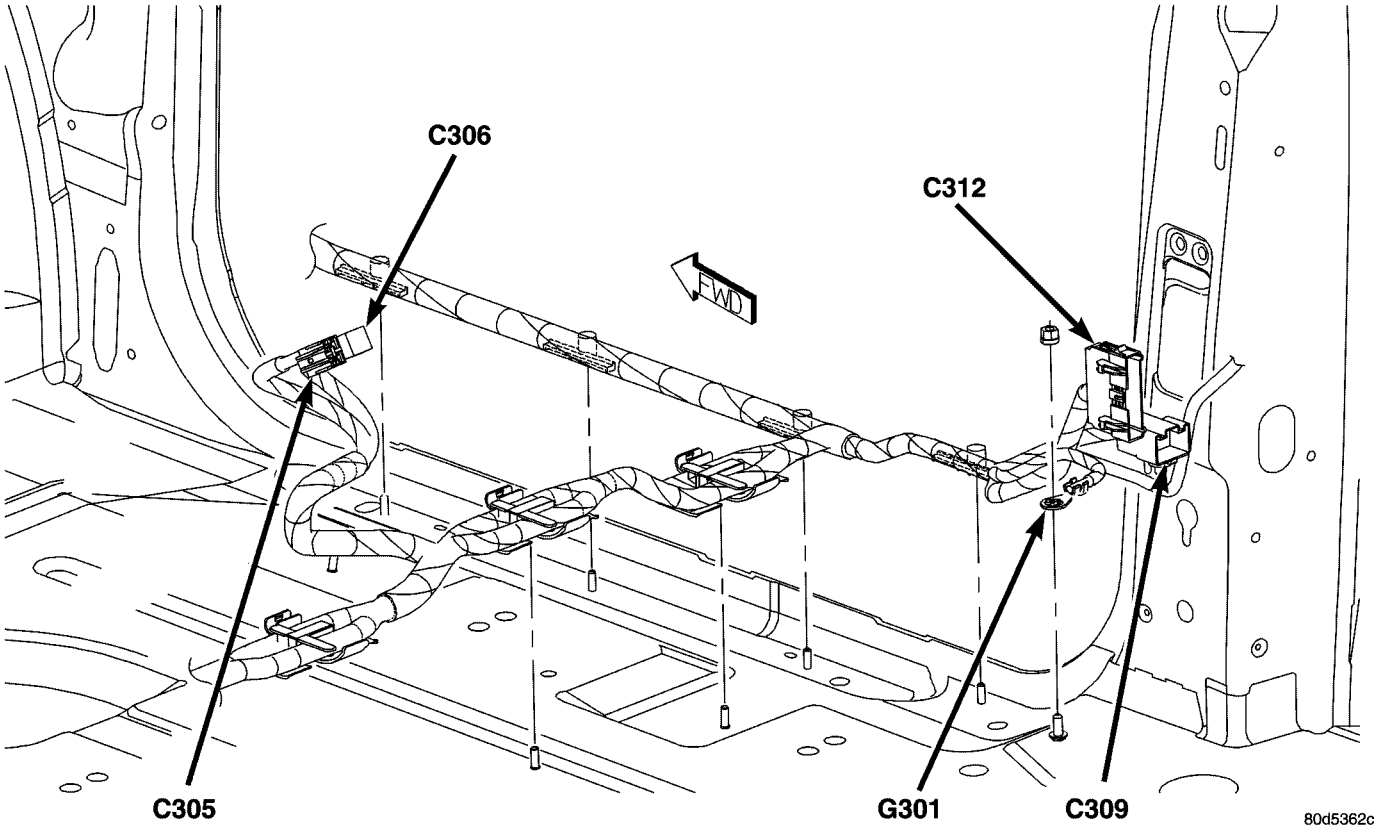

Fig. 33 RIGHT SIDE BODY RHD

CONNECTOR/GROUND/SPLICE LOCATION (Continued)

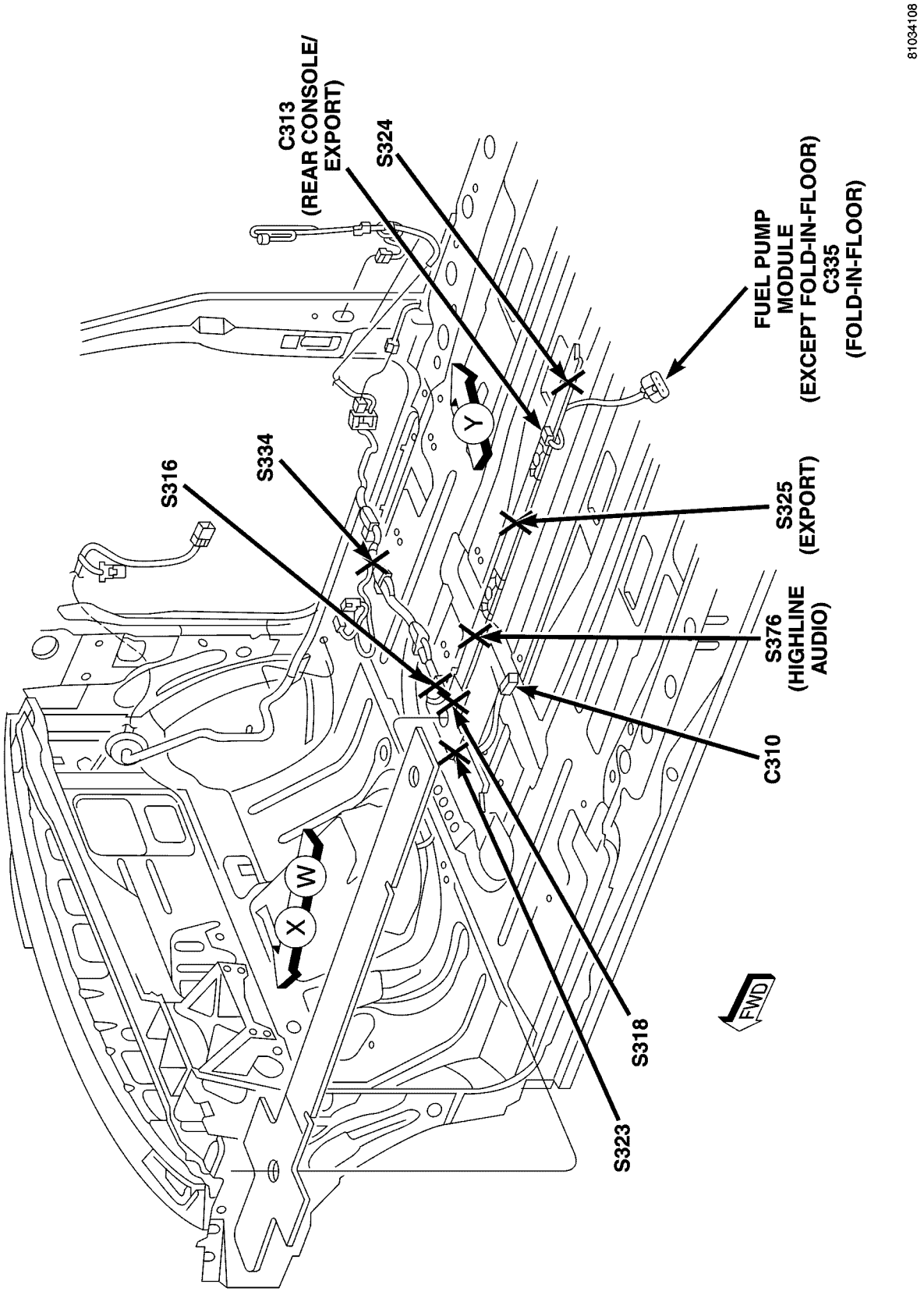

Fig. 34 BODY HARNESS SPLICES

CONNECTOR/GROUND/SPLICE LOCATION (Continued)

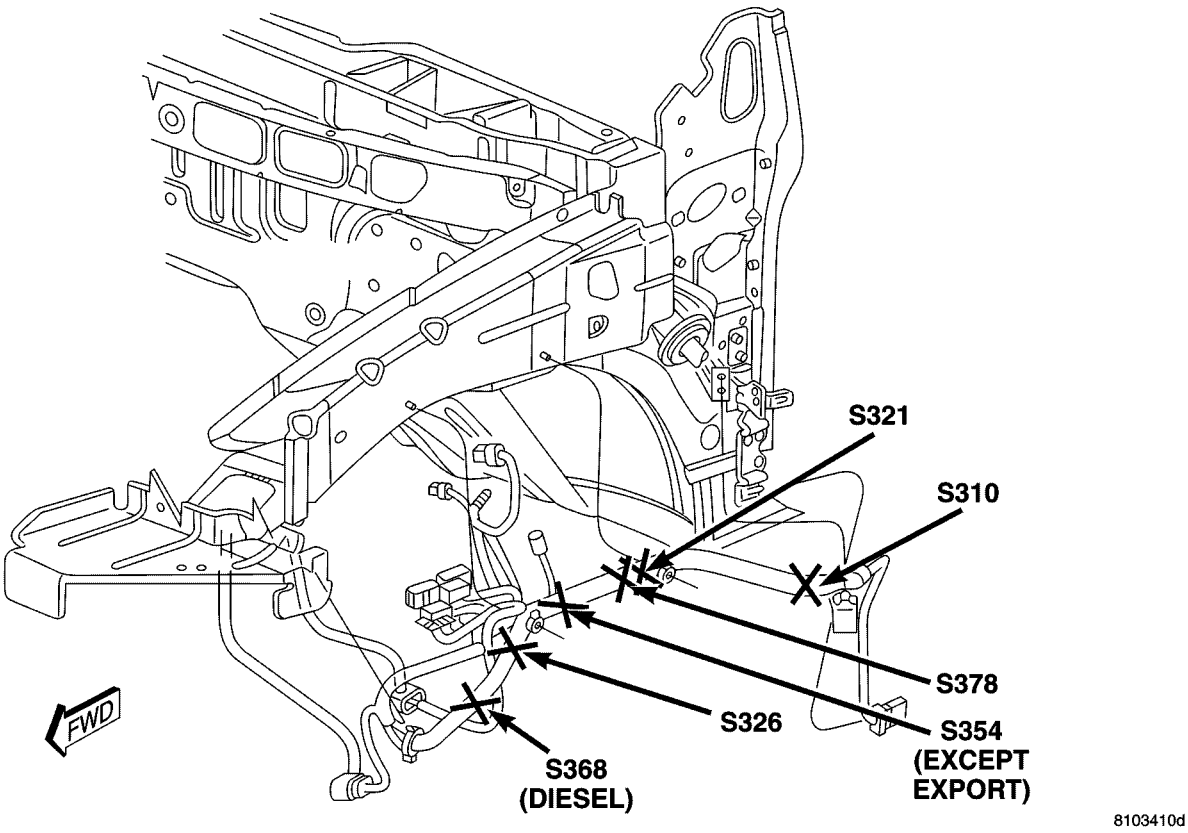

Fig. 35 BODY HARNESS SPLICES

CONNECTOR/GROUND/SPLICE LOCATION (Continued)

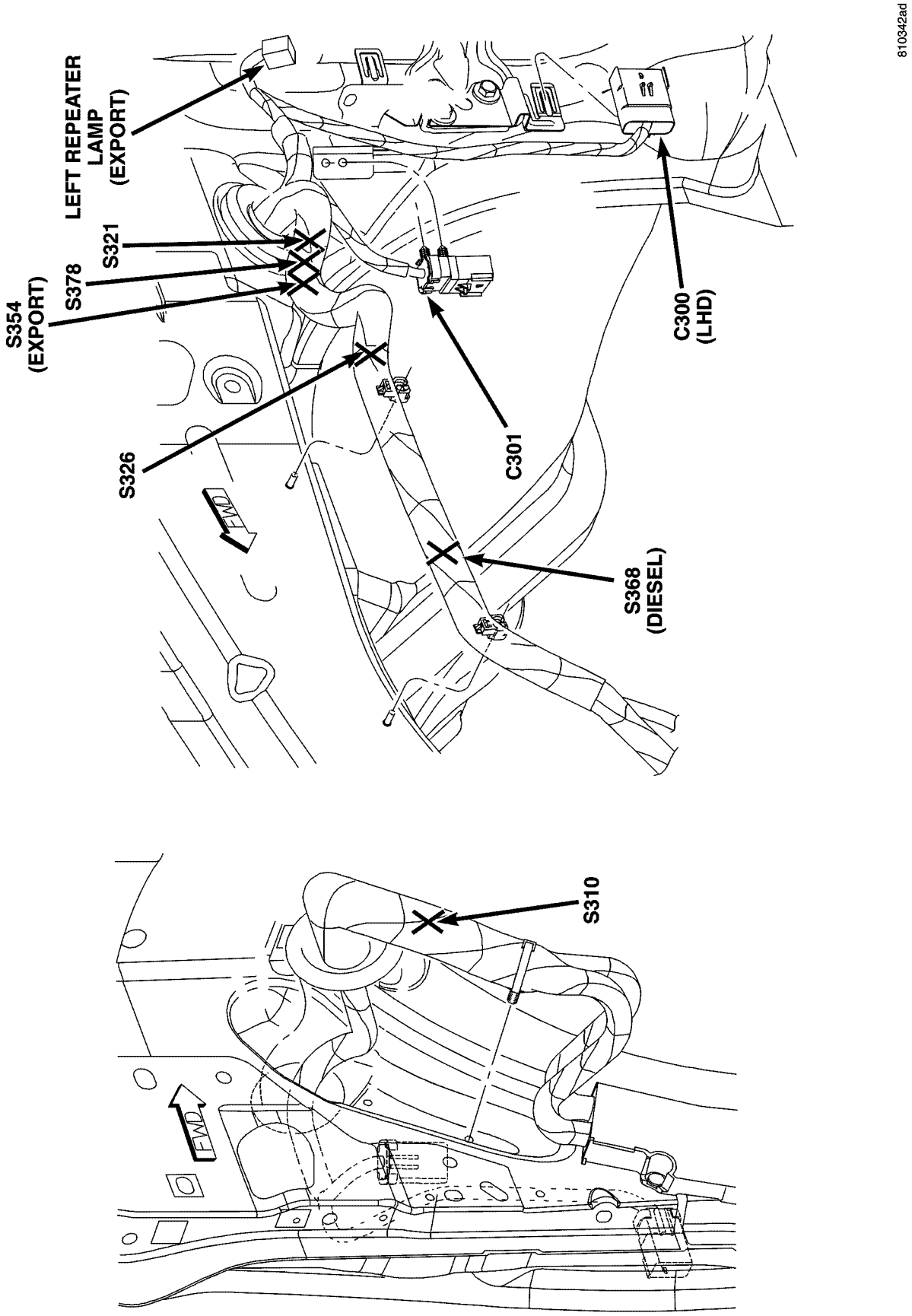

Fig. 36 LEFT FRONT LAMP SPLICES

CONNECTOR/GROUND/SPLICE LOCATION (Continued)

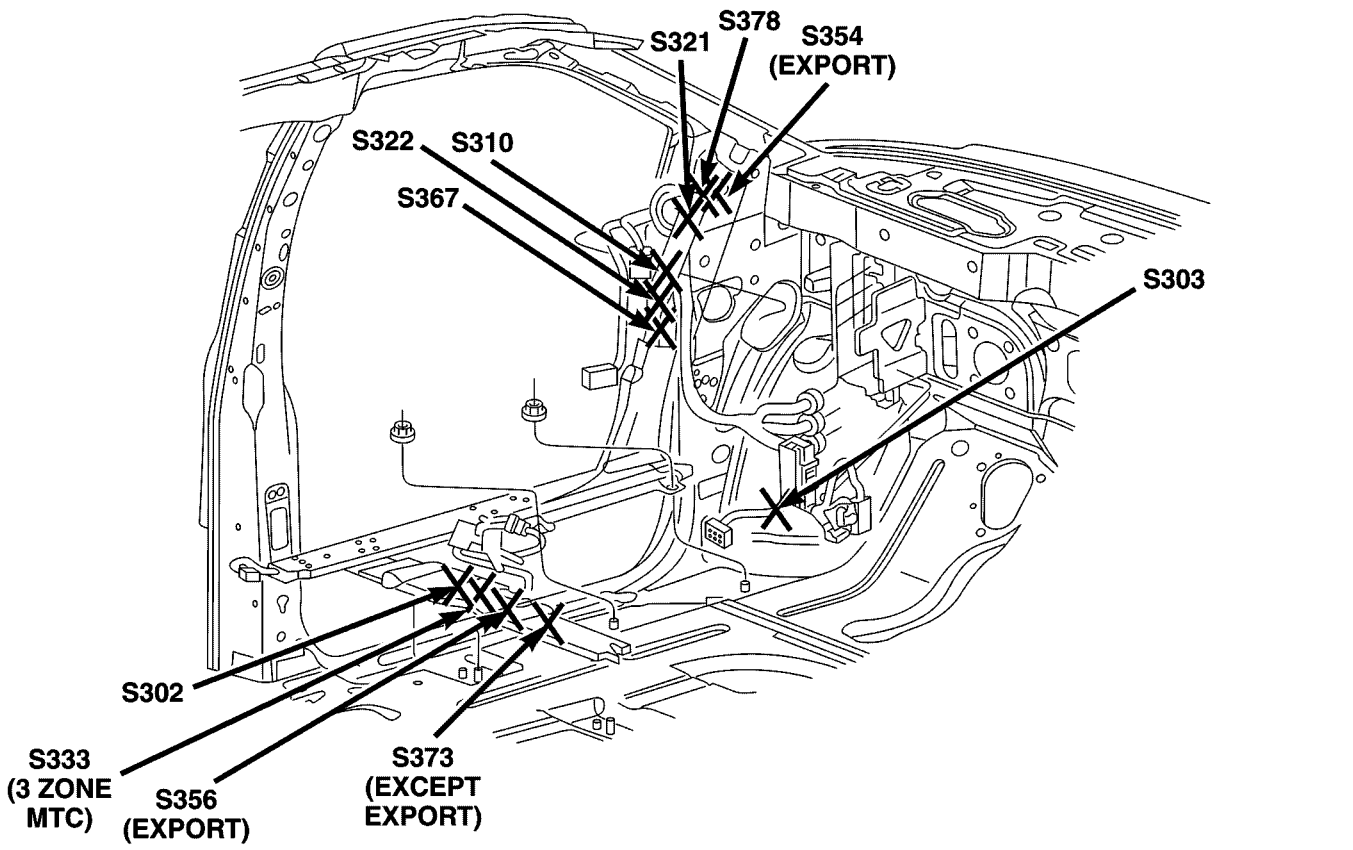

Fig. 37 LEFT FRONT BODY SPLICES

CONNECTOR/GROUND/SPLICE LOCATION (Continued)

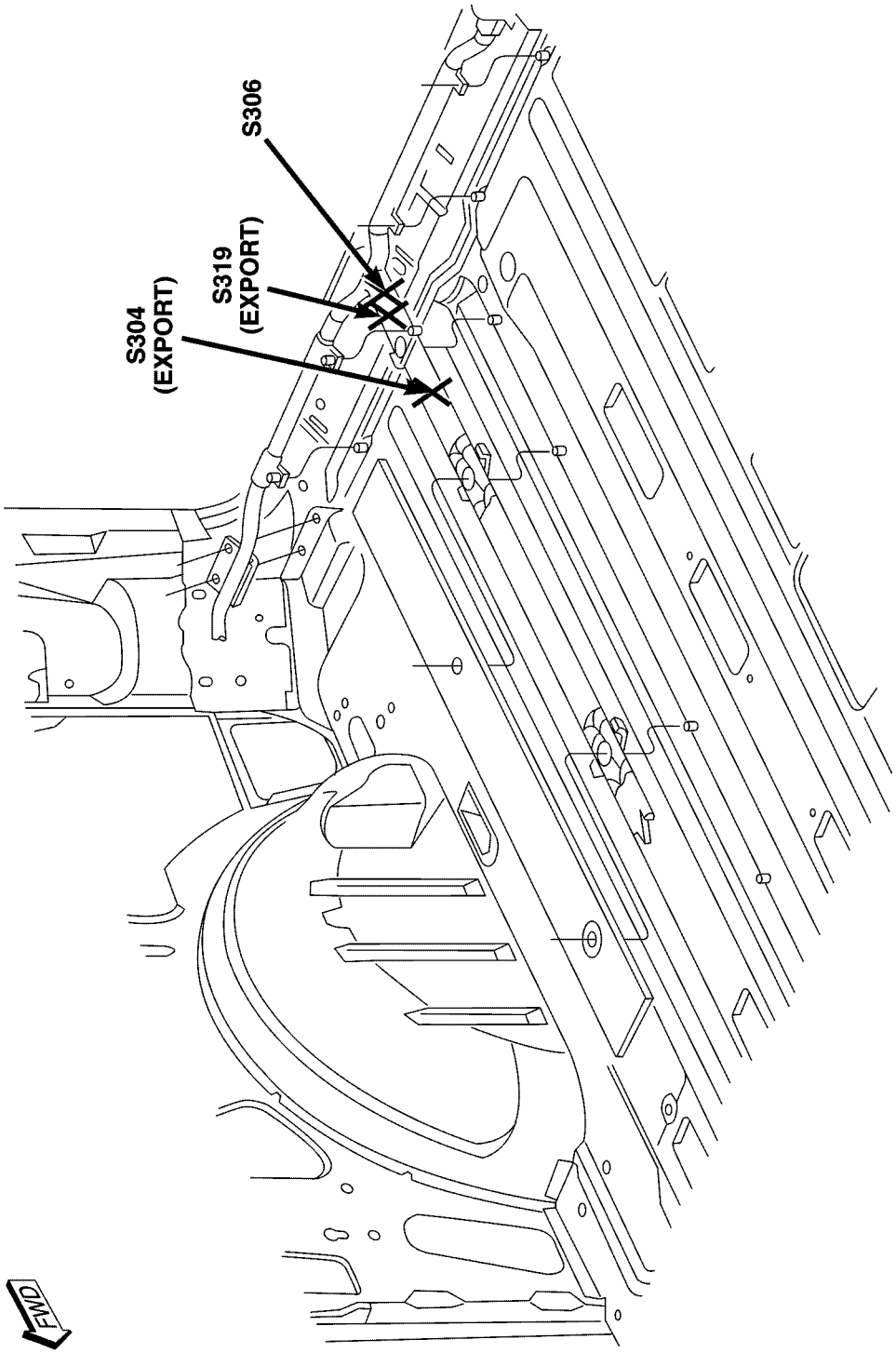

Fig. 38 REAR BODY SPLICES

CONNECTOR/GROUND/SPLICE LOCATION (Continued)

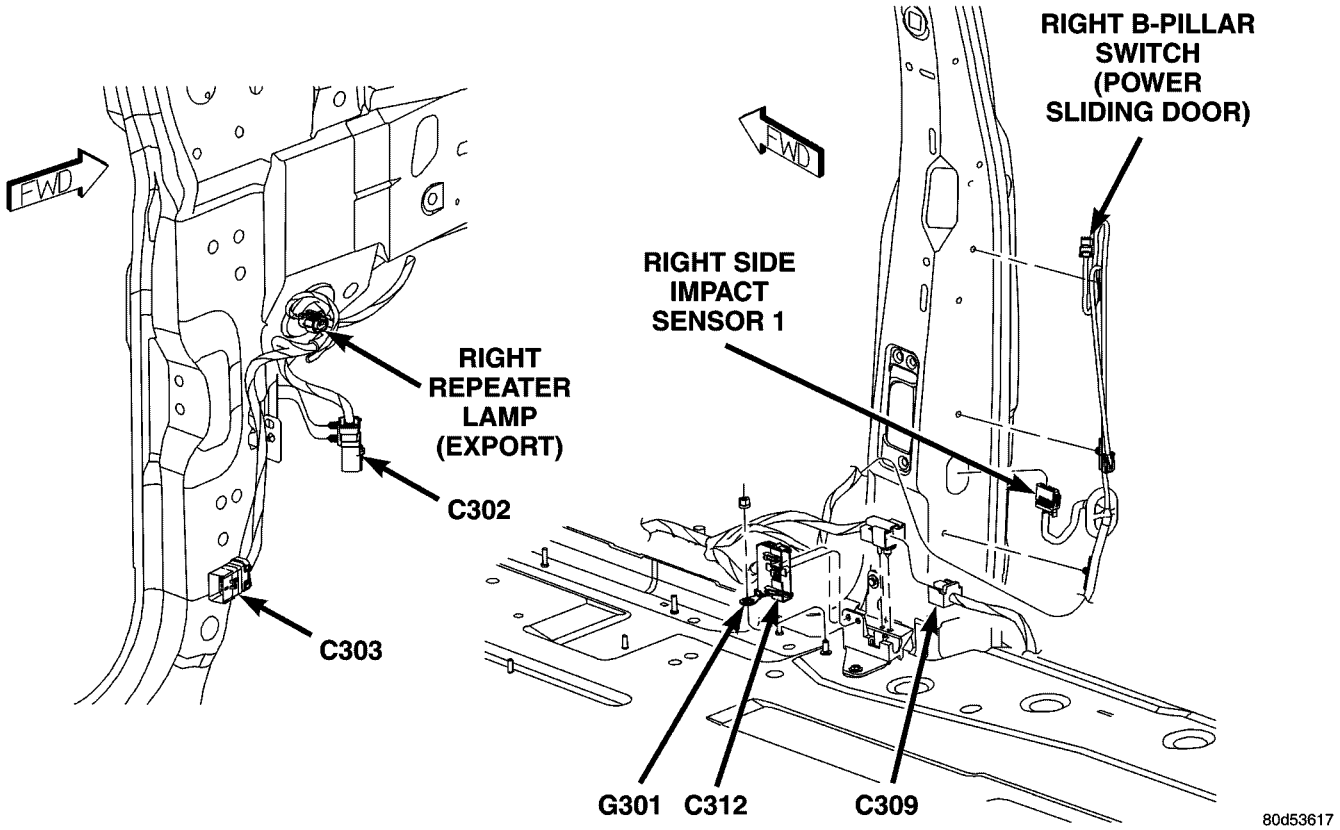

Fig. 39 RIGHT B PILLAR

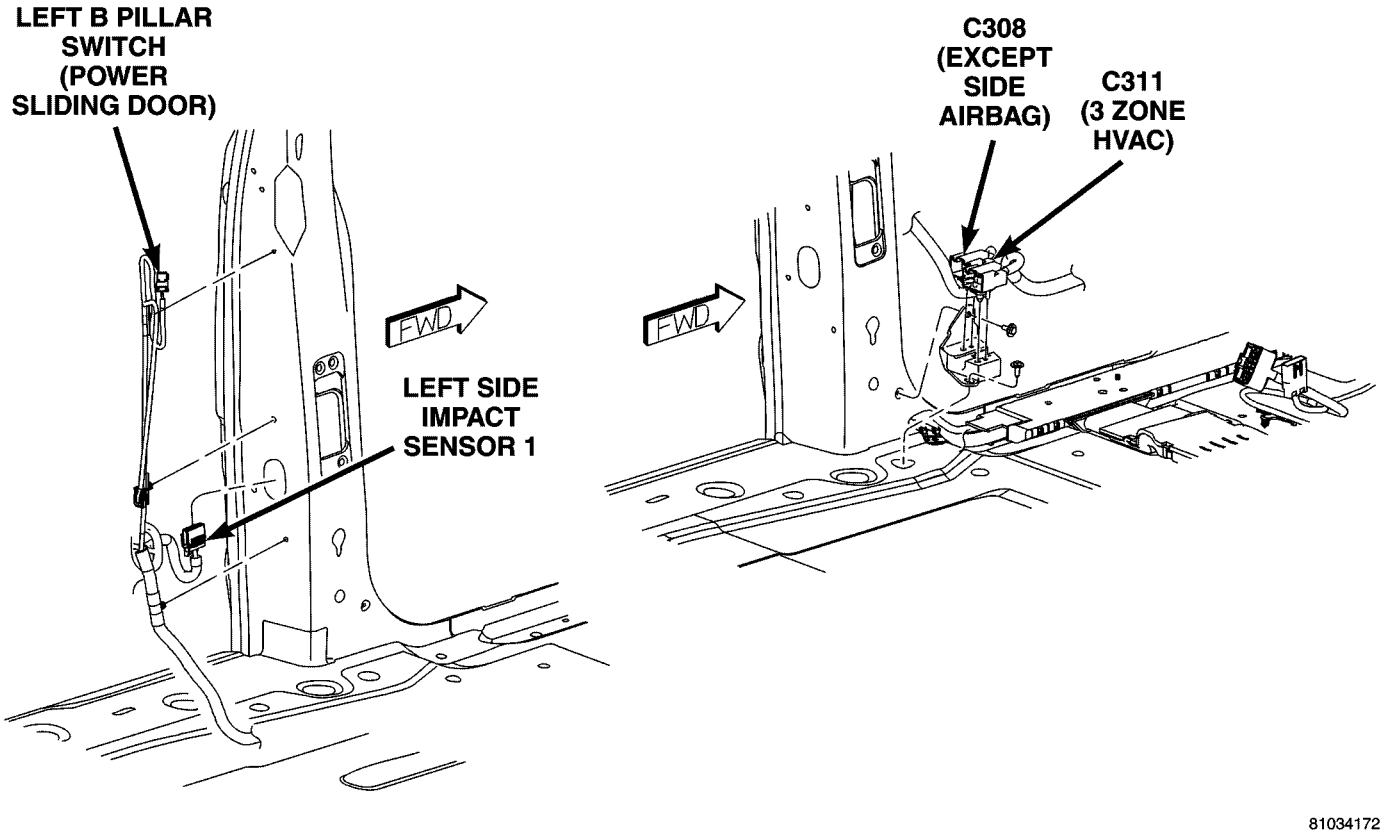

Fig. 40 LEFT B PILLAR

CONNECTOR/GROUND/SPLICE LOCATION (Continued)

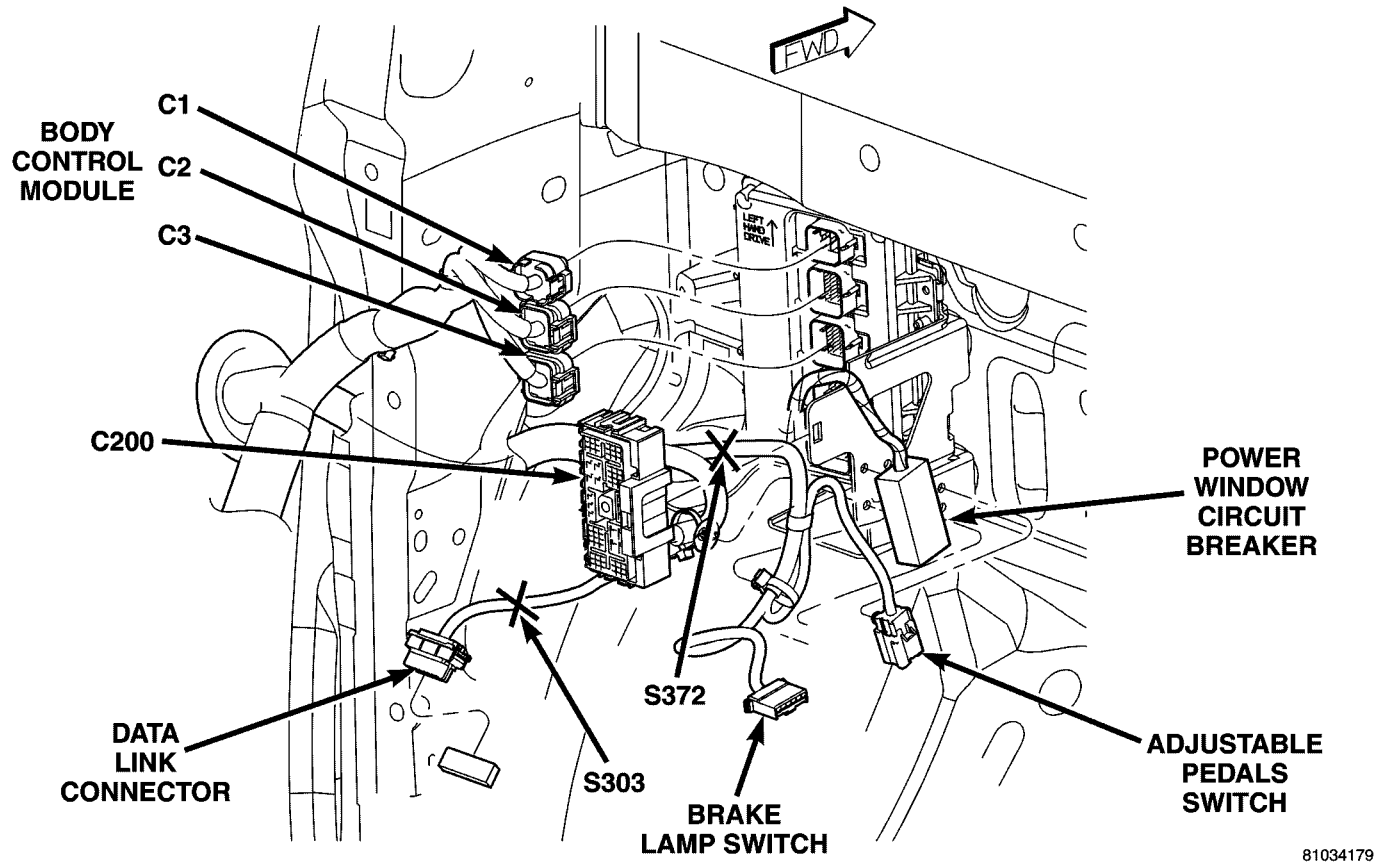

Fig. 41 LEFT SIDE KICK PANEL LHD

CONNECTOR/GROUND/SPLICE LOCATION (Continued)

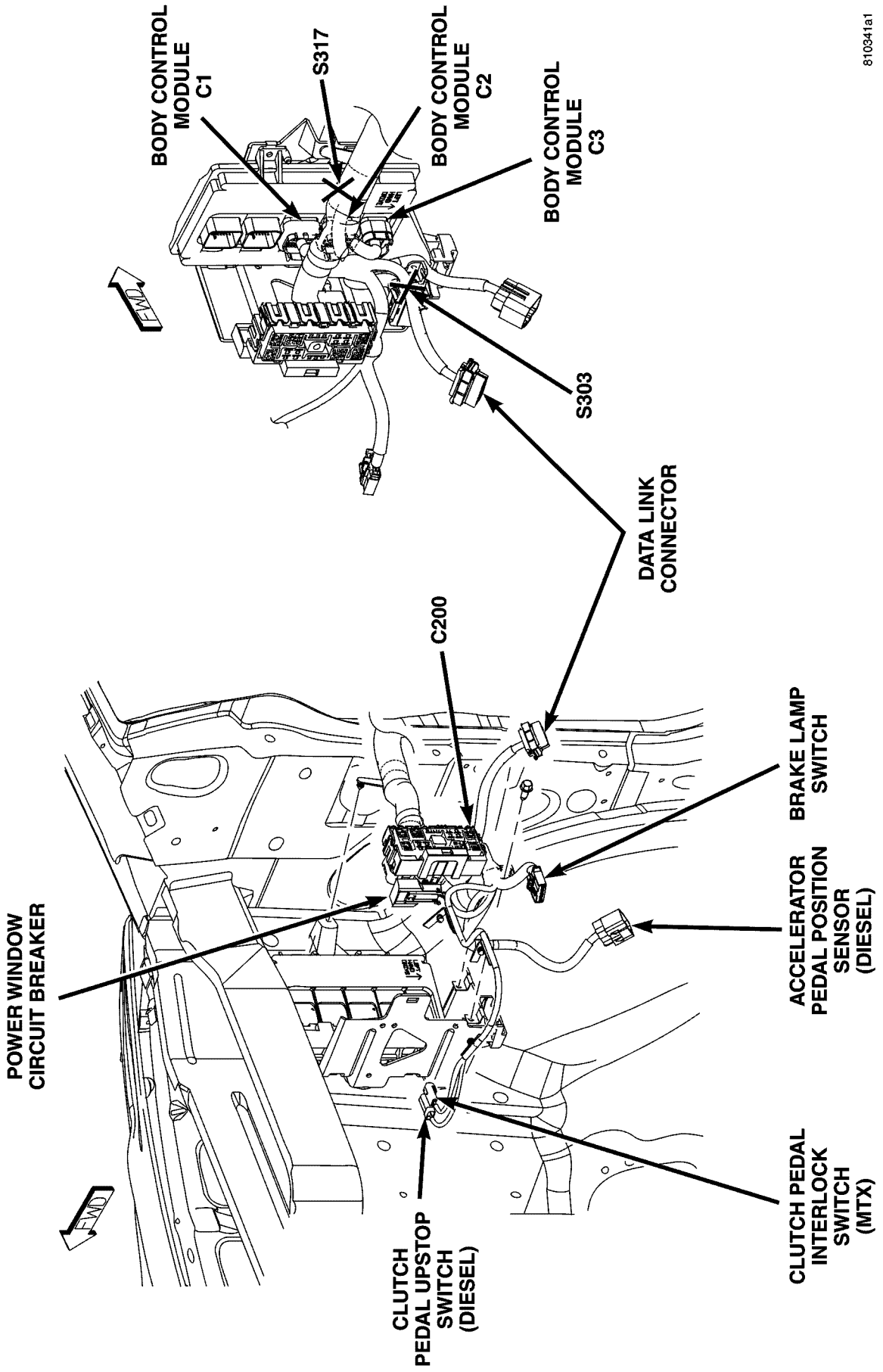

Fig. 42 RIGHT SIDE KICK PANEL RHD

CONNECTOR/GROUND/SPLICE LOCATION (Continued)

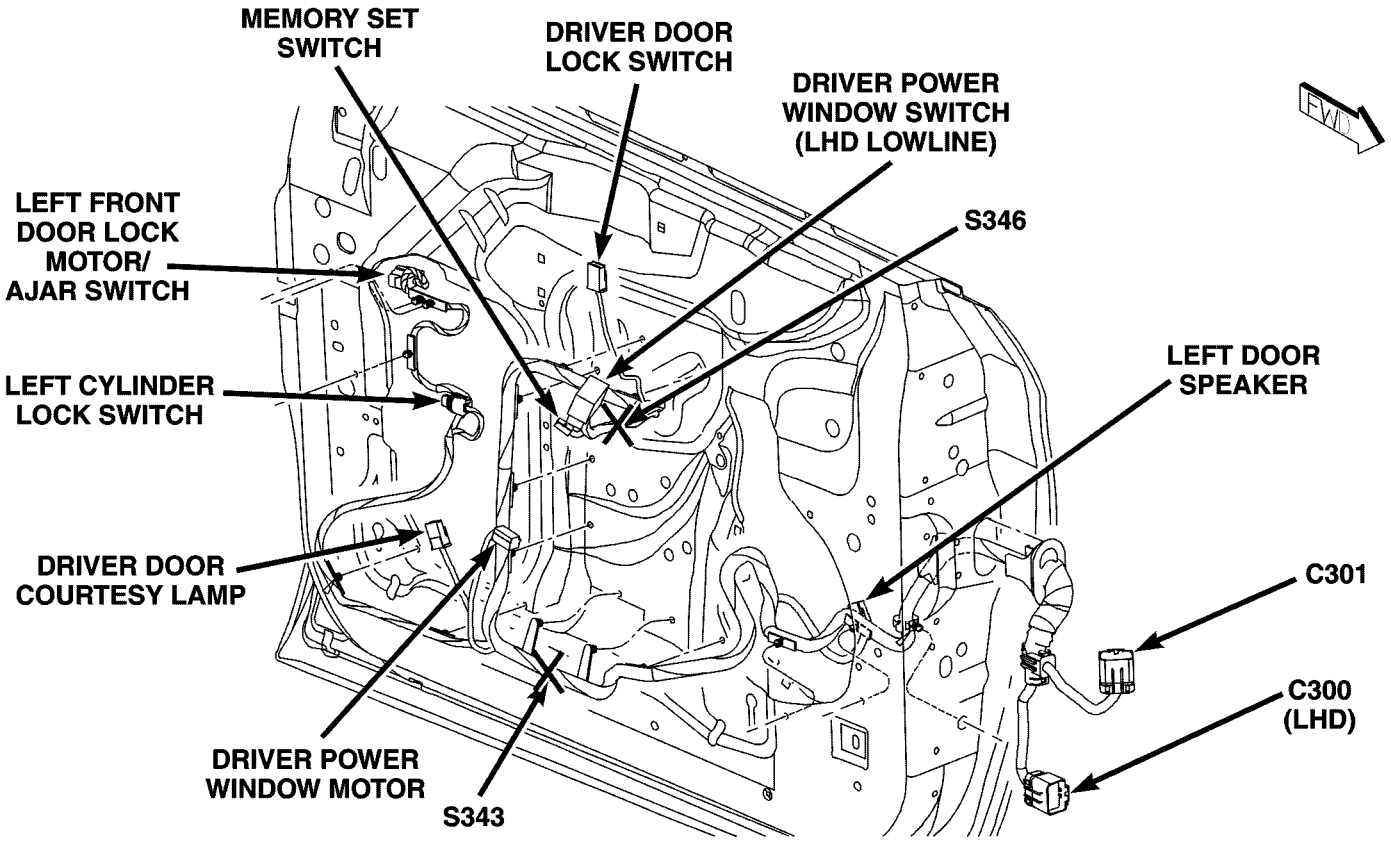

Fig. 43 DRIVER DOOR

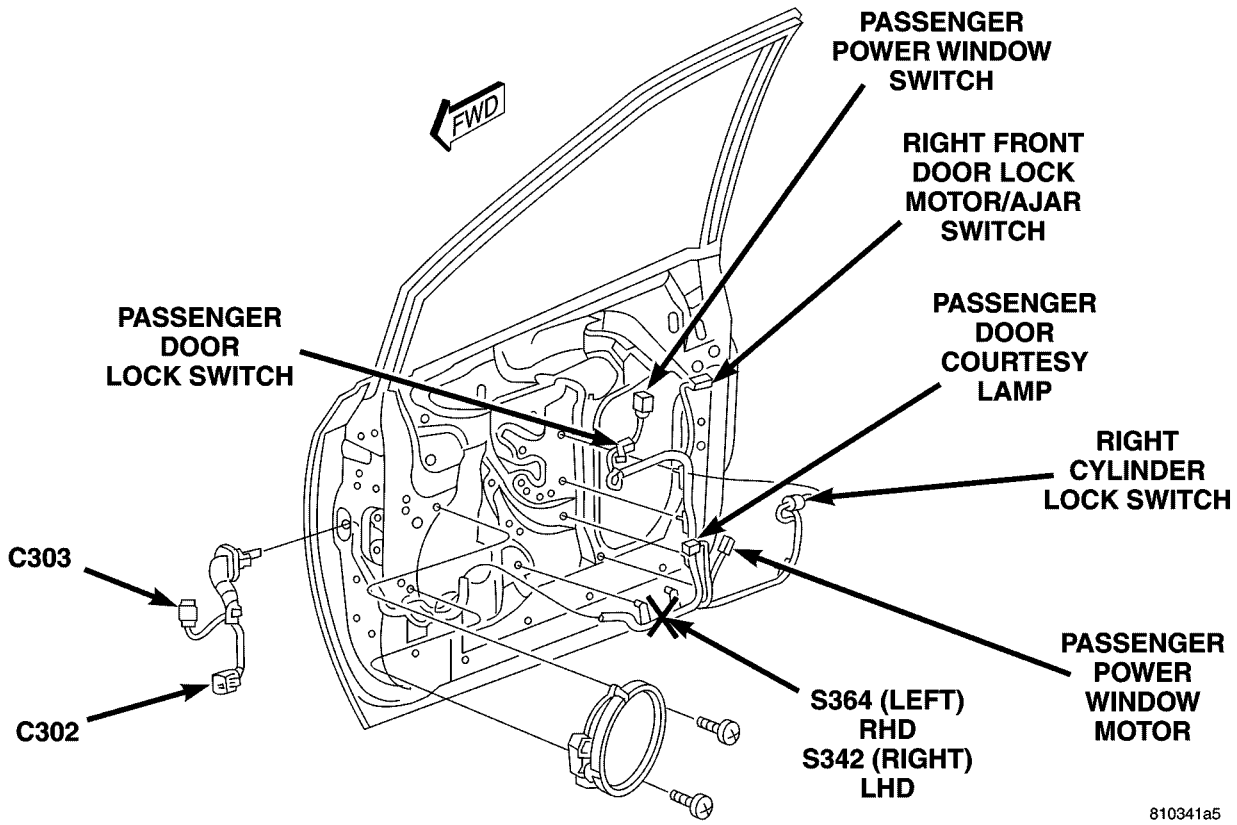

Fig. 44 PASSENGER DOOR

CONNECTOR/GROUND/SPLICE LOCATION (Continued)

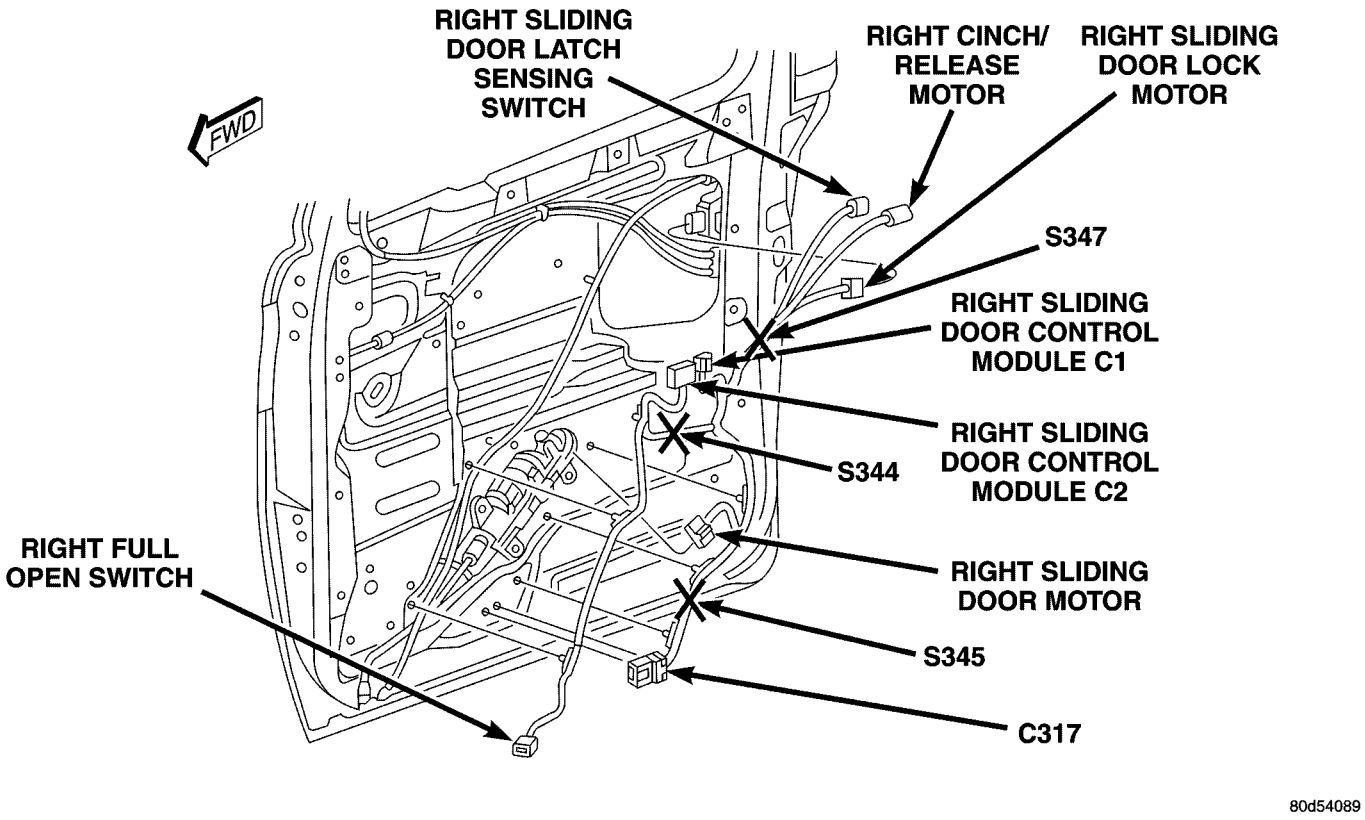

Fig. 45 RIGHT SLIDING DOOR

CONNECTOR/GROUND/SPLICE LOCATION (Continued)

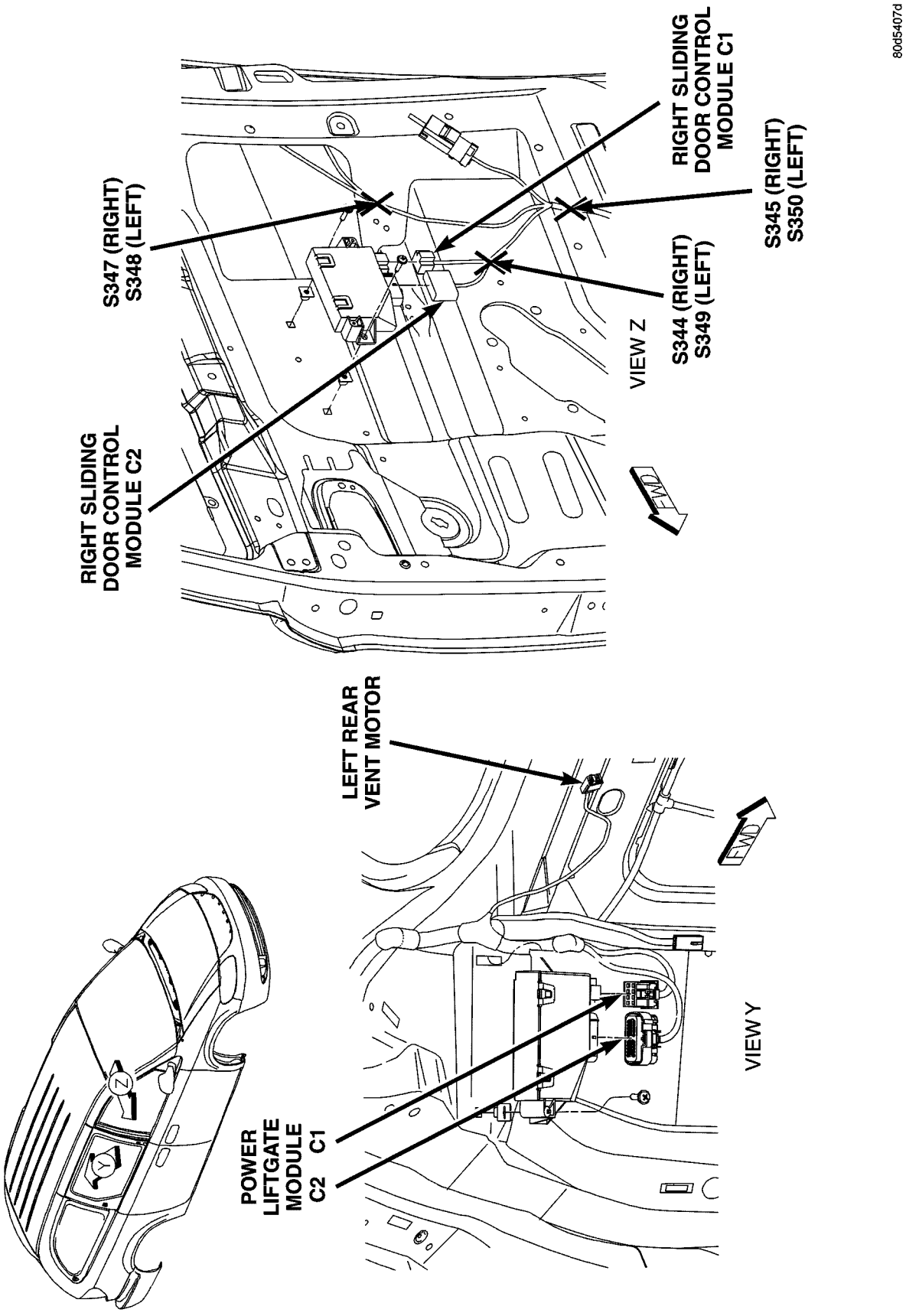

Fig. 46 LIFTGATE AND SLIDING DOOR MODULES

CONNECTOR/GROUND/SPLICE LOCATION (Continued)

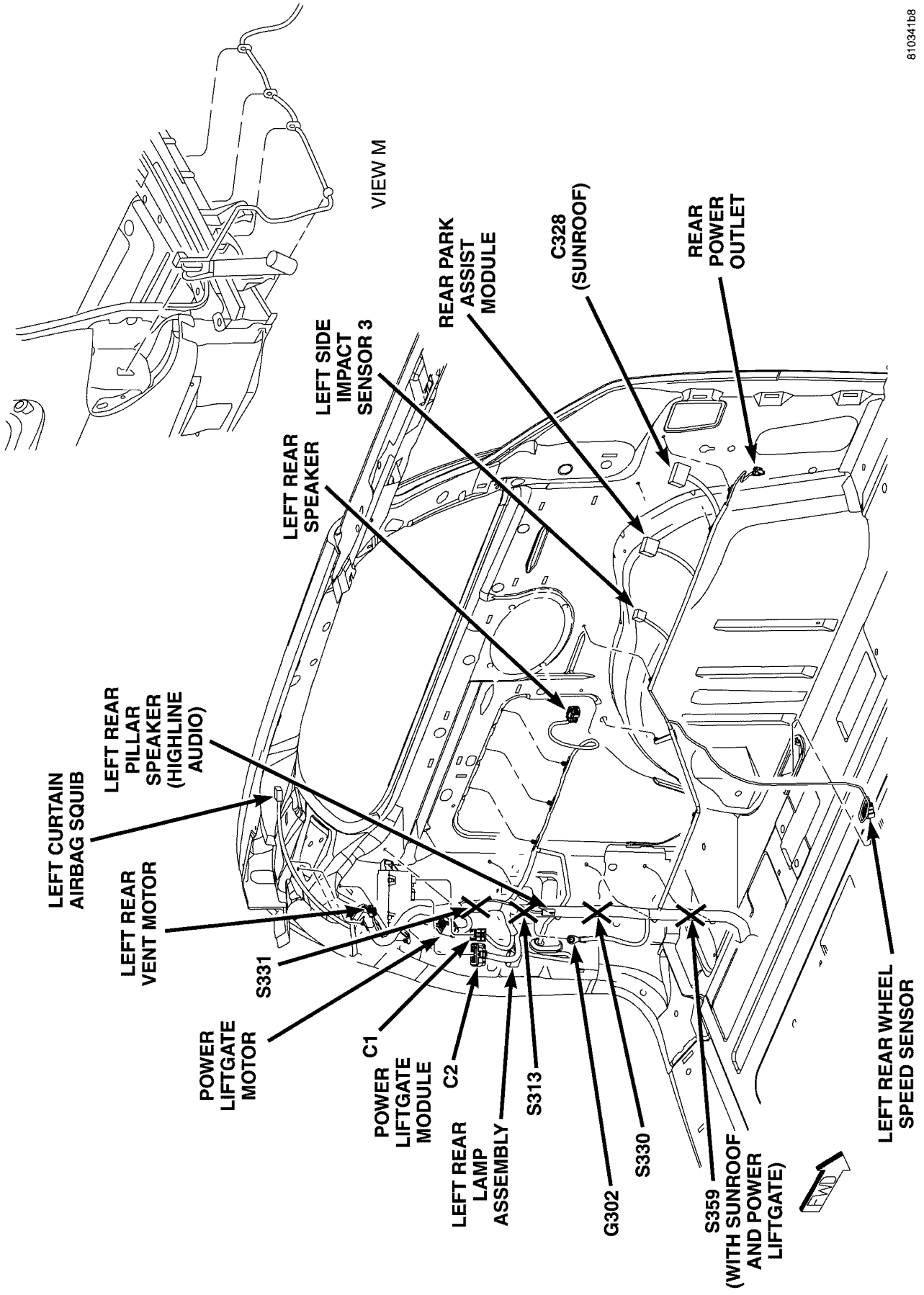

Fig. 47 LEFT REAR BODY

CONNECTOR/GROUND/SPLICE LOCATION (Continued)

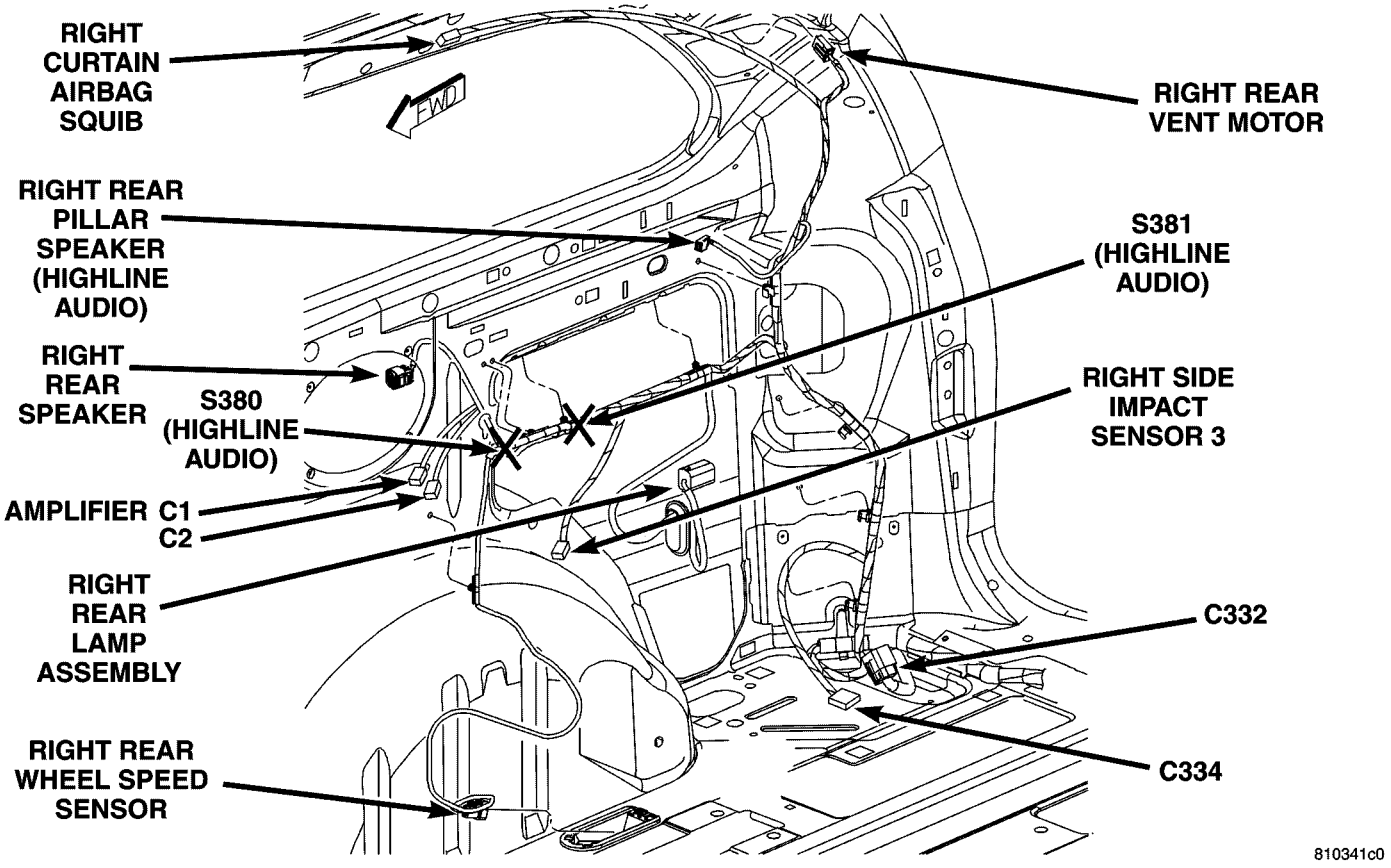

Fig. 48 RIGHT QUARTER

CONNECTOR/GROUND/SPLICE LOCATION (Continued)

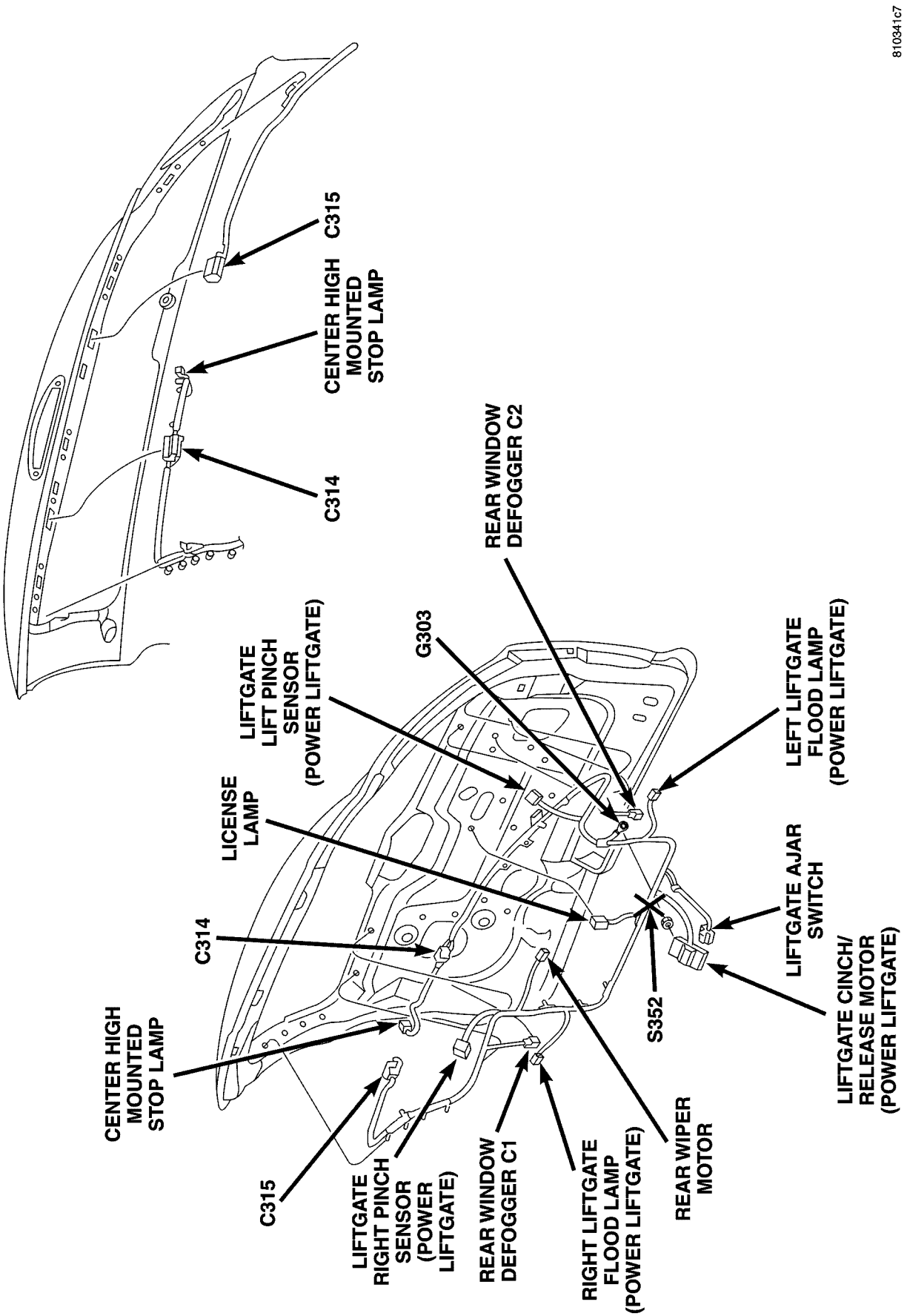

Fig. 49 LIFTGATE

CONNECTOR/GROUND/SPLICE LOCATION (Continued)

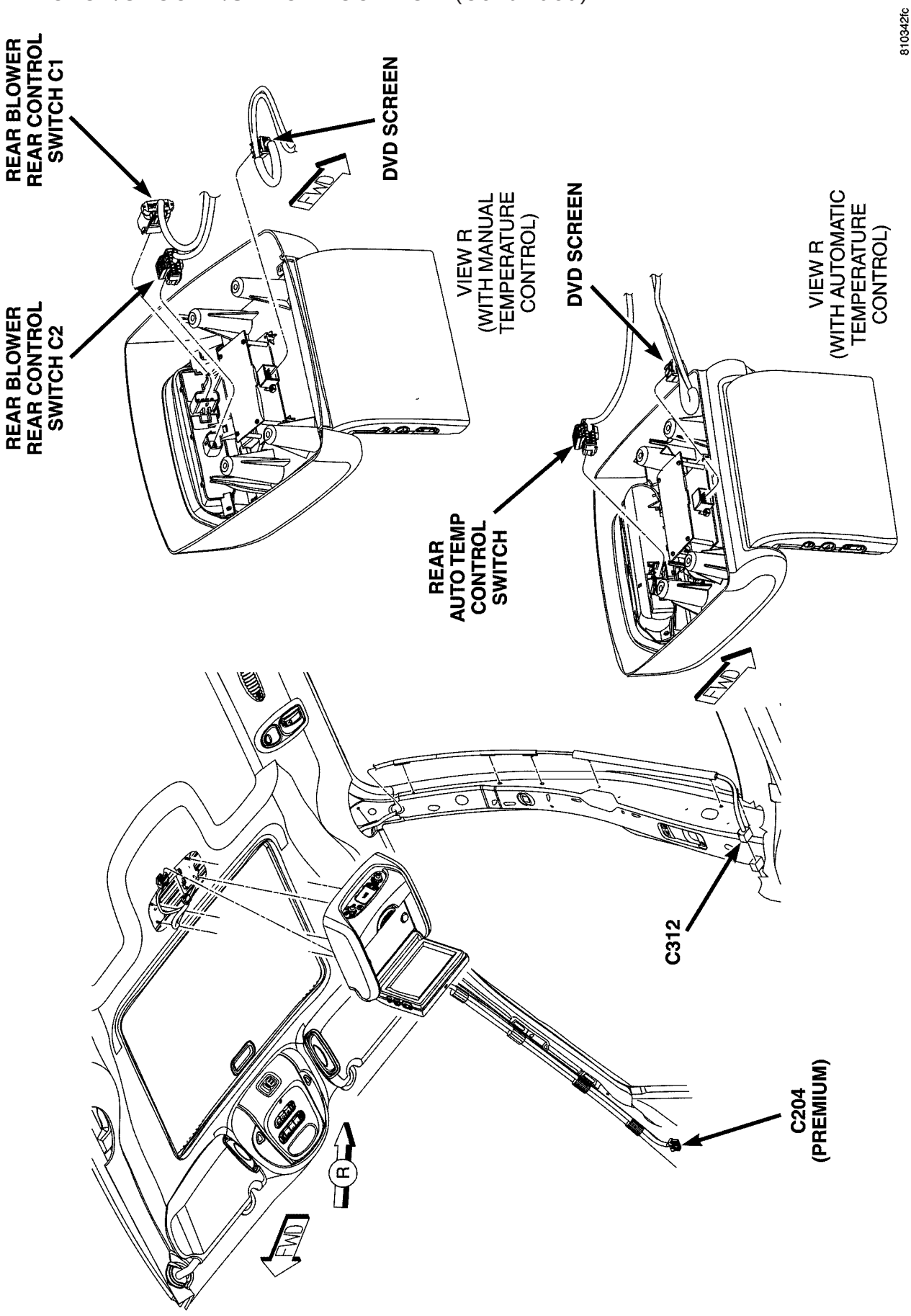

Fig. 50 HEADLINER

8W-97 POWER DISTRIBUTION SYSTEM

TABLE OF CONTENTS

page

POWER DISTRIBUTION SYSTEM
DESCRIPTION 1
OPERATION 1
SPECIAL TOOLS
POWER DISTRIBUTION SYSTEMS 1
INTEGRATED POWER MODULE
DESCRIPTION 1
OPERATION 2
REMOVAL 2
INSTALLATION 2

page

IOD FUSE
DESCRIPTION 3
OPERATION 3
POWER OUTLET
DESCRIPTION 3
OPERATION 3
DIAGNOSIS AND TESTING
DIAGNOSIS & TESTING - POWER OUTLET . . 3
REMOVAL 4
INSTALLATION 4

POWER DISTRIBUTION SYSTEM

DESCRIPTION

The power distribution system for this vehicle consists of the following components:

- Integrated Power Module (IPM)
- Front Control Module (FCM)
- Power Outlets

Refer to Wiring Diagrams for complete circuit schematics.

The power distribution system also incorporates various types of circuit control and protection features, including:

- Automatic resetting circuit breakers
- Blade-type fuses
- Bus bars
- Cartridge fuses
- Circuit splice blocks
- Flashers
- Fusible links
- Relays

OPERATION

The power distribution system for this vehicle is designed to provide safe, reliable, and centralized distribution points for the electrical current required to operate all of the many standard and optional factory-installed electrical and electronic powertrain, chassis, safety, security, comfort and convenience systems. At the same time, the power distribution system was designed to provide ready access to these electrical distribution points for the vehicle technician to use when conducting diagnosis and repair of faulty circuits. The power distribution system can also prove useful for the sourcing of additional electrical circuits that may be required to provide the electrical current needed to operate many accessories that the vehicle owner may choose to have installed.

SPECIAL TOOLS

POWER DISTRIBUTION SYSTEMS

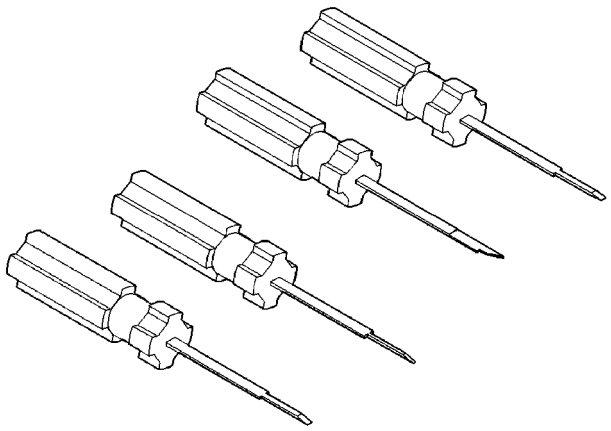

Terminal Pick Kit 6680

INTEGRATED POWER MODULE

DESCRIPTION

The Integrated Power Module (IPM) is a combination of the Power Distribution Center (PDC) and the Front Control Module (FCM). The IPM is located in the engine compartment, next to the battery. (Fig. 1). The PDC mates directly with the FCM to form the IPM. The PDC is a printed circuit board based module that contains fuses and relays, while the FCM contains the electronics controlling the IPM and other functions. This IPM connects directly to the battery positive through a four pin connector. The ground connection is through two other connectors.

INTEGRATED POWER MODULE (Continued)

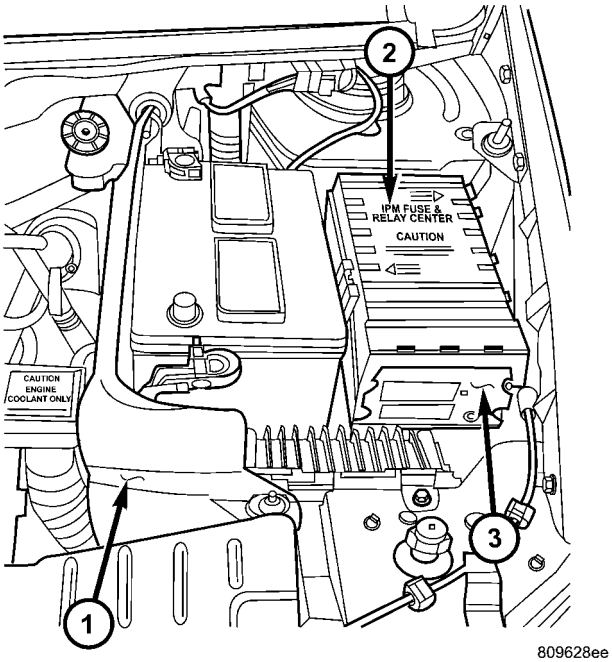

Fig. 1 INTEGRATED POWER MODULE

1 - BATTERY THERMAL GUARD
2 - INTEGRATED POWER MODULE
3 - FRONT CONTROL MODULE

The IPM provides the primary means of voltage distribution and protection for the entire vehicle.

OPERATION

All of the current from the battery and the generator output enters the Integrated Power Module (IPM) through a four- pin connector on the bottom of the module. Internal connections of all of the power distribution center circuits is accomplished by a combination of bus bars and a printed circuit board.

REMOVAL

(1) Disconnect the negative and positive battery cables.

(2) Remove the battery thermal guard.

(3) Remove the battery (Refer to 8 - ELECTRICAL/BATTERY SYSTEM/BATTERY - REMOVAL).

(4) Using a flat-bladed screwdriver, twist the Integrated Power Module (IPM) bracket retaining latch outward to free the IPM from its mounting bracket (Fig. 2).

(5) Rotate the IPM counter-clockwise to access and disconnect the electrical connectors (Fig. 3).

(6) Remove the IPM bracket clips from the hinge.

INSTALLATION

(1) Snap the left side of the Integrated Power Module (IPM) housing in its mounting bracket and connect the various electrical connectors.

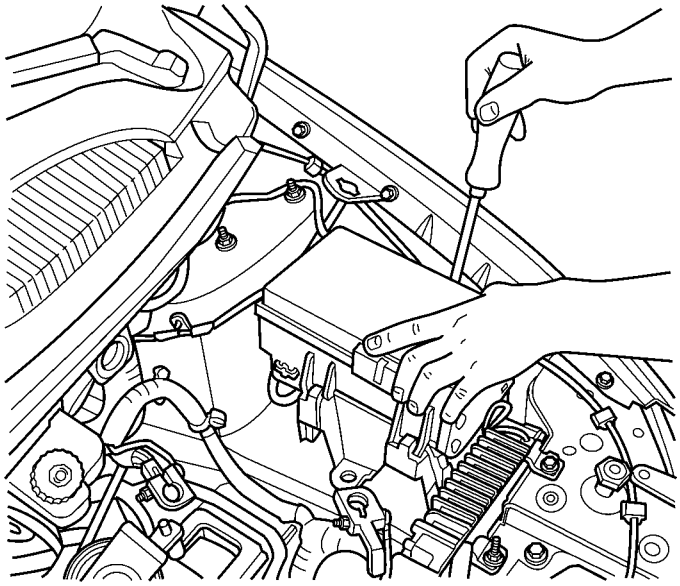

Fig. 2 INTEGRATED POWER MODULE

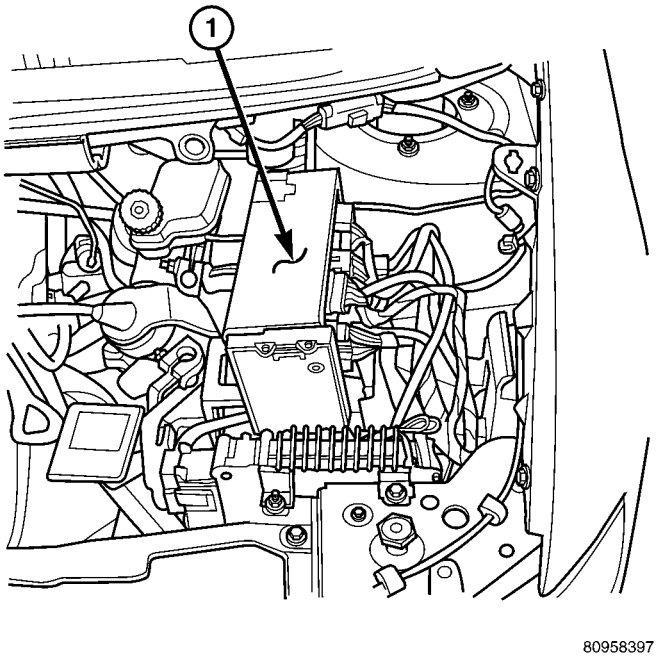

Fig. 3 DISCONNECTING IPM

1 - INTEGRATED POWER MODULE

NOTE: Ensure that the Connector Positive Assurance (CPA) on the five-pin B+ connector is positively engaged to prevent generating a Diagnostic Trouble Code (DTC).

(2) Rotate the IPM clock-wise until secured in mounting bracket. An audible click may be heard.

(3) Install the battery (Refer to 8 - ELECTRICAL/BATTERY SYSTEM/BATTERY - INSTALLATION).

(4) Install the battery thermal guard.

(5) Connect the negative and positive battery cables.

(6) Using a scan tool, check for any stored diagnostic trouble codes. Ensure that all vehicle options are operational.

IOD FUSE

DESCRIPTION

All vehicles are equipped with an Ignition-Off Draw (IOD) fuse that is removed from its normal cavity in the Integrated Power Module (IPM) when the vehicle is shipped from the factory. Dealer personnel are to remove the IOD fuse from the storage location and install it into the IPM fuse cavity marked IOD as part of the preparation procedures performed just prior to new vehicle delivery.

The IOD fuse is a 20 ampere blade-type mini fuse and, when removed, it is stored in a fuse cavity adjacent to the washer fuse within the IPM.

OPERATION

The term ignition-off draw (IOD) identifies a normal condition where power is being drained from the battery with the ignition switch in the Off position. The IOD fuse feeds the memory and sleep mode functions for some of the electronic modules in the vehicle as well as various other accessories that require battery current when the ignition switch is in the Off position, including the clock. The only reason the IOD fuse is removed is to reduce the normal IOD of the vehicle electrical system during new vehicle transportation and pre-delivery storage to reduce battery depletion, while still allowing vehicle operation so that the vehicle can be loaded, unloaded and moved as needed by both vehicle transportation company and dealer personnel.

The IOD fuse is removed from the Integrated Power Module (IPM) fuse cavity when the vehicle is shipped from the assembly plant. Dealer personnel must install the IOD fuse when the vehicle is being prepared for delivery in order to restore full electrical system operation. Once the vehicle is prepared for delivery, the IOD function of this fuse becomes transparent and the fuse that has been assigned the IOD designation becomes only another Fused B(+) circuit fuse. The IOD fuse serves no useful purpose to the dealer technician in the service or diagnosis of any vehicle system or condition, other than the same purpose as that of any other standard circuit protection device.

The IOD fuse can be used by the vehicle owner as a convenient means of reducing battery depletion when a vehicle is to be stored for periods not to exceed approximately thirty days. However, it must be remembered that removing the IOD fuse will not eliminate IOD, but only reduce this normal condition. If a vehicle will be stored for more than thirty days, the battery negative cable should be disconnected to eliminate normal IOD; and, the battery should be tested and recharged at regular intervals during the vehicle storage period to prevent the battery from becoming discharged or damaged.

POWER OUTLET

DESCRIPTION

Two power outlets are installed in the instrument panel center lower bezel. Two additional power outlets are incorporated into the left rear C-pillar and the center console (if equipped). The power outlets bases are secured by a snap fit. A hinged plug flips closed to conceal and protect the power outlet base when not in use.

OPERATION

The power outlet base or receptacle shell is connected to ground, and an insulated contact in the bottom of the shell is connected to battery current. The power outlet on the instrument panel marked with a battery receives battery voltage from a fuse in the Integrated Power Module (IPM) at all times. The other power outlet on the instrument panel marked with a key receives battery voltage only when the key is in the on position.

The power outlet located in the center console receives battery voltage all the time when positioned between the **front seats** and key-on voltage when positioned between the **rear seats**. The power outlet located on the C-pillar receives battery voltage only when the key is in the ON position.

DIAGNOSIS AND TESTING

DIAGNOSIS & TESTING - POWER OUTLET

WARNING: ON VEHICLES EQUIPPED WITH AIRBAGS, REFER TO RESTRAINTS BEFORE ATTEMPTING ANY STEERING WHEEL, STEERING COLUMN, SEAT OR INSTRUMENT PANEL COMPONENT DIAGNOSIS OR SERVICE. FAILURE TO TAKE THE PROPER PRECAUTIONS COULD RESULT IN ACCIDENTAL AIRBAG DEPLOYMENT AND POSSIBLE PERSONAL INJURY.

(1) Check the fused B(+) fuse in the Integrated Power Module (IPM). If OK, go to Step 2. If not OK, repair the shorted circuit or component as required and replace the faulty fuse.

POWER OUTLET (Continued)

(2) Check for battery voltage at the fused B(+) fuse in the IPM. If OK, go to Step 3. If not OK, repair the open fused B(+) circuit to the IPM fuse as required.

(3) Open the power outlet door. Check for continuity between the inside circumference of the power outlet receptacle and a good ground. There should be continuity. If OK, go to Step 4. If not OK, go to Step 5.

(4) Check for battery voltage at the insulated contact located at the back of the power outlet receptacle. If not OK, go to Step 5.

(5) Disconnect and isolate the battery negative cable. Remove the appropriate bezel. Check for continuity between the ground circuit cavity of the power outlet wire harness connector and a good ground. There should be continuity. If OK, go to Step 6. If not OK, repair the open ground circuit to ground as required.

(6) Connect the battery negative cable. Check for battery voltage at the fused B(+) circuit cavity of the power outlet wire harness connector. If OK, replace the faulty power outlet receptacle. If not OK, repair the open fused B(+) circuit to the IPM fuse as required.

REMOVAL

(1) Disconnect and isolate the battery negative cable.

(2) Note position of the retaining bosses (Fig. 4).

(3) Using external snap ring pliers with 90 degree tips. Insert pliers with tips against bosses and squeeze forcing bosses out of base.

(4) Pull out the base through mounting ring by gently rocking pliers.

(5) Disconnect the base wires.

(6) Remove light ring and disconnect wire.

INSTALLATION

(1) Position the mounting ring on the instrument panel and feed the wires through the ring. Index the cap and the mounting ring with the index tab at the 9 o'clock position to the key in the instrument panel. Install the ring.

(2) Connect the wires to the base. Orientate the base alignment rib at the 11 o'clock position to mate the groove in the mounting ring to the base.

(3) Push the base into the bezel until it locks in place.

(4) Check operation of outlet or element and install the outlet cap.

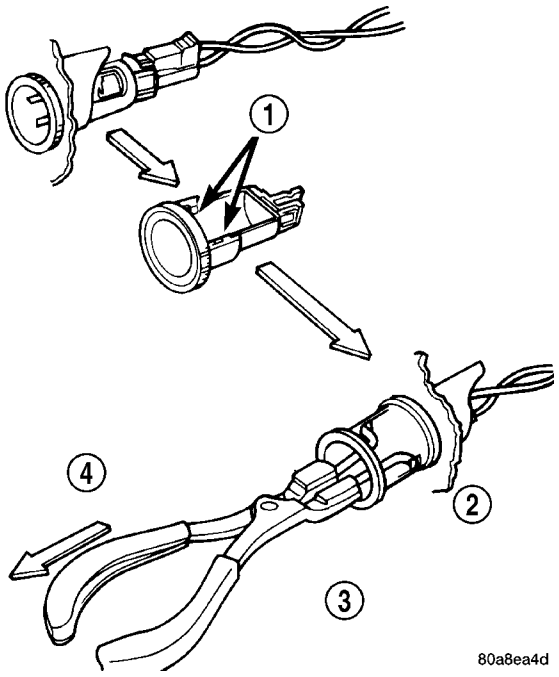

Fig. 4 POWER OUTLET

1 - RETAINING BOSSES-ENGAGE PLIERS HERE
2 - PARTIALLY REMOVED
3 - EXTERNAL SNAP-RING PLIERS
4 - PULL BASE OUT-THROUGH MOUNTING RING

ENGINE

TABLE OF CONTENTS

	page		page
ENGINE 2.4L	**1**	**ENGINE 3.3/3.8L**	**76**

ENGINE 2.4L

TABLE OF CONTENTS

page

ENGINE 2.4L
- DESCRIPTION . . . 3
- DIAGNOSIS AND TESTING
  - DIAGNOSIS AND TESTING - ENGINE DIAGNOSIS - INTRODUCTION . . . 3
  - DIAGNOSIS AND TESTING - ENGINE DIAGNOSIS - PERFORMANCE . . . 4
  - DIAGNOSIS AND TESTING - ENGINE DIAGNOSIS - MECHANICAL . . . 6
  - DIAGNOSIS AND TESTING - ENGINE OIL LEAK INSPECTION . . . 8
  - DIAGNOSIS AND TESTING - CYLINDER COMPRESSION PRESSURE TEST . . . 9
  - DIAGNOSIS AND TESTING - CYLINDER COMBUSTION PRESSURE LEAKAGE TEST . . . 9
- STANDARD PROCEDURE
  - STANDARD PROCEDURE - ENGINE CORE AND OIL GALLERY PLUGS . . . 10
  - STANDARD PROCEDURE - REPAIR OF DAMAGED OR WORN THREADS . . . 10
  - HYDROSTATIC LOCKED ENGINE . . . 10
  - FORM-IN-PLACE GASKETS AND SEALERS . 11
  - STANDARD PROCEDURE - ENGINE GASKET SURFACE PREPARATION . . . 11
  - STANDARD PROCEDURE - MEASURING BEARING CLEARANCE USING PLASTIGAGE . . . 12
- REMOVAL - ENGINE ASSEMBLY . . . 12
- INSTALLATION - ENGINE ASSEMBLY . . . 14
- SPECIFICATIONS
  - SPECIFICATIONS - 2.4L ENGINE . . . 16
  - SPECIFICATIONS - TORQUE . . . 20
- SPECIAL TOOLS
  - 2.4L ENGINE . . . 21

AIR CLEANER ELEMENT
- REMOVAL . . . 24
- INSTALLATION . . . 24

AIR CLEANER HOUSING
- REMOVAL . . . 25
- INSTALLATION . . . 25

CYLINDER HEAD
- DESCRIPTION . . . 25
- DIAGNOSIS AND TESTING—CYLINDER HEAD GASKET . . . 25
- REMOVAL - CYLINDER HEAD . . . 26
- CLEANING . . . 26
- INSPECTION . . . 27
- INSTALLATION - CYLINDER HEAD . . . 27

CAMSHAFT OIL SEAL(S)
- REMOVAL . . . 28
- INSTALLATION . . . 29

CAMSHAFT(S)
- DESCRIPTION . . . 29
- OPERATION . . . 29
- STANDARD PROCEDURE - MEASURING CAMSHAFT END PLAY . . . 29
- REMOVAL . . . 30
- CLEANING . . . 30
- INSPECTION . . . 30
- INSTALLATION . . . 31

CYLINDER HEAD COVER
- REMOVAL . . . 31
- CLEANING . . . 31
- INSPECTION . . . 31
- INSTALLATION . . . 32

INTAKE/EXHAUST VALVES & SEATS
- DESCRIPTION . . . 33
- CLEANING . . . 33

VALVE SPRINGS & SEALS
- REMOVAL
  - REMOVAL - CYLINDER HEAD ON . . . 33
  - REMOVAL - CYLINDER HEAD OFF . . . 33
- INSPECTION . . . 33

INSTALLATION
INSTALLATION - CYLINDER HEAD ON 33
INSTALLATION - CYLINDER HEAD OFF 33
HYDRAULIC LASH ADJUSTERS
DIAGNOSIS AND TESTING - HYDRAULIC LASH ADJUSTER NOISE DIAGNOSIS 34
REMOVAL 35
INSTALLATION 35
ROCKER ARMS
REMOVAL 35
INSPECTION 35
INSTALLATION 35
ENGINE BLOCK
DESCRIPTION 36
STANDARD PROCEDURE - CYLINDER BORE HONING 36
CLEANING 37
INSPECTION 37
CRANKSHAFT
STANDARD PROCEDURE - CRANKSHAFT END PLAY 37
REMOVAL - CRANKSHAFT 37
INSPECTION 38
INSTALLATION - CRANKSHAFT 39
CRANKSHAFT OIL SEAL - FRONT
REMOVAL 41
INSTALLATION 42
CRANKSHAFT OIL SEAL - REAR
REMOVAL 42
INSTALLATION 42
PISTON & CONNECTING ROD
DESCRIPTION 44
STANDARD PROCEDURE - PISTON TO CYLINDER BORE FITTING 44
REMOVAL 44
INSTALLATION 45
CONNECTING ROD BEARINGS
STANDARD PROCEDURE
CONNECTING ROD - FITTING 46
PISTON RINGS
STANDARD PROCEDURE
PISTON RING - FITTING 47
REMOVAL 47
INSTALLATION 47
VIBRATION DAMPER
REMOVAL 48
INSTALLATION 49
STRUCTURAL COLLAR
REMOVAL 49
INSTALLATION 49
ENGINE MOUNTING
DESCRIPTION 50
FRONT MOUNT
REMOVAL 50
INSTALLATION 50
LEFT MOUNT
REMOVAL 50
INSTALLATION 50
REAR MOUNT
REMOVAL 51
INSTALLATION 52
RIGHT MOUNT
REMOVAL 52
INSTALLATION 52
LUBRICATION
DESCRIPTION 53
OPERATION 53
DIAGNOSIS AND TESTING - CHECKING ENGINE OIL PRESSURE 53
OIL
STANDARD PROCEDURE
ENGINE OIL LEVEL CHECK 54
STANDARD PROCEDURE - ENGINE OIL AND FILTER CHANGE 54
OIL FILTER
DESCRIPTION 54
REMOVAL 54
INSTALLATION 54
OIL PAN
REMOVAL 55
INSTALLATION 55
OIL PRESSURE SWITCH
REMOVAL 56
INSTALLATION 56
OIL PUMP
REMOVAL 56
DISASSEMBLY 57
CLEANING 57
INSPECTION 58
ASSEMBLY 58
INSTALLATION 59
INTAKE MANIFOLD
DESCRIPTION 60
DIAGNOSIS AND TESTING - INTAKE MANIFOLD LEAKS 60
INTAKE MANIFOLD - UPPER
REMOVAL 60
INSPECTION 61
INSTALLATION 61
INTAKE MANIFOLD - LOWER
REMOVAL 62
INSPECTION 62
INSTALLATION 62
EXHAUST MANIFOLD
REMOVAL 63
CLEANING 63
INSPECTION 63
INSTALLATION 63
TIMING BELT COVER(S)
REMOVAL 63
INSTALLATION 64
TIMING BELT AND SPROCKET(S)
REMOVAL
REMOVAL - TIMING BELT 65

REMOVAL - CAMSHAFT SPROCKETS 66
REMOVAL - CRANKSHAFT SPROCKET 66
CLEANING 67
INSTALLATION
INSTALLATION - CRANKSHAFT SPROCKET . 67
INSTALLATION - CAMSHAFT SPROCKETS . . 67
INSTALLATION - TIMING BELT 67
TIMING BELT TENSIONER & PULLEY
REMOVAL 69
INSTALLATION 70
BALANCE SHAFTS AND CARRIER ASSEMBLY
DESCRIPTION 71
OPERATION 71
REMOVAL 71
INSTALLATION 73

ENGINE 2.4L

DESCRIPTION

The 2.4 Liter (148 cu. in.) in-line four cylinder engine is a double over head camshaft with hydraulic lash adjusters and four valve per cylinder design. The engine is free-wheeling; meaning it has provisions for piston-to-valve clearance. However valve-to-valve interference can occur, if camshafts are rotated independently.

The cylinders are numbered from front of the engine to the rear. The firing order is 1–3–4–2.

The engine identification number is located on the rear of the cylinder block (Fig. 1).

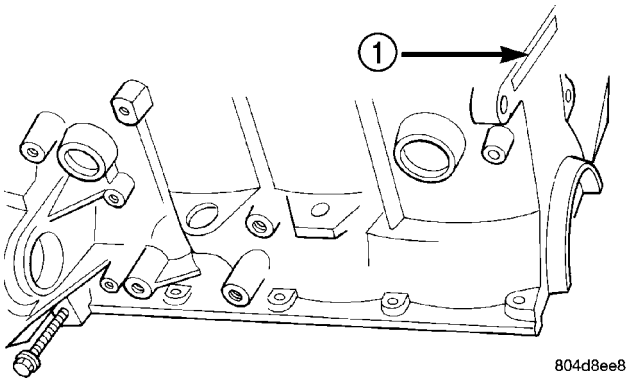

Fig. 1 Engine Identification

1 - ENGINE IDENTIFICATION LOCATION

DIAGNOSIS AND TESTING

DIAGNOSIS AND TESTING - ENGINE DIAGNOSIS - INTRODUCTION

Engine diagnosis is helpful in determining the causes of malfunctions not detected and remedied by routine maintenance.

These malfunctions may be classified as either mechanical (e.g., a strange noise), or performance (e.g., engine idles rough and stalls).

Refer to the Engine Mechanical and the Engine Performance diagnostic charts, for possible causes and corrections of malfunctions (Refer to 9 - ENGINE - DIAGNOSIS AND TESTING - MECHANICAL) (Refer to 9 - ENGINE - DIAGNOSIS AND TESTING - PERFORMANCE).

For fuel system diagnosis, (Refer to 14 - FUEL SYSTEM/FUEL DELIVERY - DIAGNOSIS AND TESTING).

Additional tests and diagnostic procedures may be necessary for specific engine malfunctions that cannot be isolated with the Service Diagnosis charts. Information concerning additional tests and diagnosis is provided within the following:

- Cylinder Compression Pressure Test
- Cylinder Combustion Pressure Leakage Test
- Engine Cylinder Head Gasket Failure Diagnosis
- Intake Manifold Leakage Diagnosis
- Hydraulic Lash Adjuster Noise Diagnosis
- Engine Oil Leak Inspection

ENGINE 2.4L (Continued)

DIAGNOSIS AND TESTING - ENGINE DIAGNOSIS - PERFORMANCE

CONDITION	POSSIBLE CAUSE	CORRECTION
ENGINE WILL NOT START	1. Weak battery.	1. Test battery. Charge or replace as necessary. (Refer to 8 - ELECTRICAL/BATTERY SYSTEM - DIAGNOSIS AND TESTING)
	2. Corroded or loose battery connections.	2. Clean and tighten battery connections. Apply a coat of light mineral grease to terminals.
	3. Faulty starter.	3. Test starting system. (Refer to 8 - ELECTRICAL/STARTING - DIAGNOSIS AND TESTING)
	4. Faulty coil(s) or control unit.	4. Test and replace as needed. (Refer to Appropriate Diagnostic Information)
	5. Incorrect spark plug gap.	5. Set gap. (Refer to 8 - ELECTRICAL/IGNITION CONTROL - SPECIFICATIONS)
	6. Contamination in fuel system.	6. Clean system and replace fuel filter.
	7. Faulty fuel pump.	7. Test fuel pump and replace as needed. (Refer to Appropriate Diagnostic Information)
	8. Incorrect engine timing.	8. Check for a skipped timing belt/chain.
ENGINE STALLS OR IDLES ROUGH	1. Idle speed too low.	1. Test minimum air flow. (Refer to Appropriate Diagnostic Information)
	2. Incorrect fuel mixture.	2. (Refer to Appropriate Diagnostic Information)
	3. Intake manifold leakage.	3. Inspect intake manifold, manifold gasket, and vacuum hoses.
	4. Faulty ignition coil(s).	4. Test and replace as necessary. (Refer to Appropriate Diagnostic Information)

ENGINE 2.4L (Continued)

CONDITION	POSSIBLE CAUSE	CORRECTION
ENGINE LOSS OF POWER	1. Dirty or incorrectly gapped plugs.	1. Clean plugs and set gap.
	2. Contamination in fuel system.	2. Clean system and replace fuel filter.
	3. Faulty fuel pump.	3. Test and replace as necessary. (Refer to Appropriate Diagnostic Information)
	4. Incorrect valve timing.	4. Correct valve timing.
	5. Leaking cylinder head gasket.	5. Replace cylinder head gasket.
	6. Low compression.	6. Test compression of each cylinder.
	7. Burned, warped, or pitted valves.	7. Replace valves.
	8. Plugged or restricted exhaust system.	8. Perform exhaust restriction test. (Refer to 11 - EXHAUST SYSTEM - DIAGNOSIS AND TESTING) Install new parts, as necessary.
	9. Faulty ignition coil(s).	9. Test and replace as necessary. (Refer to Appropriate Diagnostic Information)
ENGINE MISSES ON ACCELERATION	1. Dirty or incorrectly gapped spark plugs.	1. Clean spark plugs and set gap.
	2. Contamination in Fuel System.	2. Clean fuel system and replace fuel filter.
	3. Burned, warped, or pitted valves.	3. Replace valves.
	4. Faulty ignition coil(s).	4. Test and replace as necessary. (Refer to Appropriate Diagnostic Information)
ENGINE MISSES AT HIGH SPEED	1. Dirty or incorrect spark plug gap.	1. Clean spark plugs and set gap.
	2. Faulty ignition coil(s).	2. Test and replace as necessary. (Refer to Appropriate Diagnostic Information)
	3. Dirty fuel injector(s).	3. Test and replace as necessary. (Refer to Appropriate Diagnostic Information)
	4. Contamination in fuel system.	4. Clean system and replace fuel filter.

ENGINE 2.4L (Continued)

DIAGNOSIS AND TESTING - ENGINE DIAGNOSIS - MECHANICAL

CONDITION	POSSIBLE CAUSES	CORRECTION
NOISY VALVES	1. High or low oil level in crankcase.	1. Check and correct engine oil level.
	2. Thin or diluted oil.	2. Change oil to correct viscosity.
	3. Thick oil	3. (a) Change engine oil and filter. (b) Run engine to operating temperature. (c) Change engine oil and filter again.
	4. Low oil pressure.	4. Check and correct engine oil pressure problem.
	5. Dirt in hydraulic lifters/lash adjusters.	5. Replace hydraulic lifters/lash adjusters.
	6. Worn rocker arms.	6. Inspect oil supply to rocker arms.
	7. Worn hydraulic lifters/lash adjusters.	7. Replace hydraulic lifters/lash adjusters.
	8. Worn valve guides.	8. Replace cylinder head assembly.
	9. Excessive runout of valve seats on valve faces.	9. Grind valve seats and valves.
CONNECTING ROD NOISE	1. Insufficient oil supply.	1. Check engine oil level.
	2. Low oil pressure.	2. Check engine oil level. Inspect oil pump relief valve and spring.
	3. Thin or diluted oil.	3. Change oil to correct viscosity.
	4. Thick oil	4. (a) Change engine oil and filter. (b) Run engine to operating temperature. (c) Change engine oil and filter again.
	5. Excessive bearing clearance.	5. Measure bearings for correct clearance. Repair as necessary.
	6. Connecting rod journal out-of-round.	6. Replace crankshaft or grind surface.
	7. Misaligned connecting rods.	7. Replace bent connecting rods.

ENGINE 2.4L (Continued)

CONDITION	POSSIBLE CAUSES	CORRECTION
MAIN BEARING NOISE	1. Insufficient oil supply.	1. Check engine oil level.
	2. Low oil pressure.	2. Check engine oil level. Inspect oil pump relief valve and spring.
	3. Thin or diluted oil.	3. Change oil to correct viscosity.
	4. Thick oil	4. (a) Change engine oil and filter. (b) Run engine to operating temperature. (c) Change engine oil and filter again.
	5. Excessive bearing clearance.	5. Measure bearings for correct clearance. Repair as necessary.
	6. Excessive end play.	6. Check thrust bearing for wear on flanges.
	7. Crankshaft journal out-of-round or worn.	7. Replace crankshaft or grind journals.
	8. Loose flywheel or torque converter.	8. Tighten to correct torque.
OIL PRESSURE DROP	1. Low oil level.	1. Check engine oil level.
	2. Faulty oil pressure sensor/switch.	2. Replace oil pressure sensor/ switch.
	3. Low oil pressure.	3. Check oil pressure sensor/switch and main bearing oil clearance.
	4. Clogged oil filter.	4. Install new oil filter.
	5. Worn parts in oil pump.	5. Replace worn parts or pump.
	6. Thin or diluted oil.	6. Change oil to correct viscosity.
	7. Oil pump relief valve stuck.	7. Remove valve and inspect, clean, or replace.
	8. Oil pump suction tube loose.	8. Remove oil pan and install new tube or clean, if necessary.
	9. Oil pump cover warped or cracked.	9. Install new oil pump.
	10. Excessive bearing clearance.	10. Measure bearings for correct clearance.
OIL LEAKS	1. Misaligned or deteriorated gaskets.	1. Replace gasket(s).
	2. Loose fastener, broken or porous metal part.	2. Tighten, repair or replace the part.
	3. Misaligned or deteriorated cup or threaded plug.	3. Replace as necessary.

ENGINE 2.4L (Continued)

CONDITION	POSSIBLE CAUSES	CORRECTION
OIL CONSUMPTION OR SPARK PLUGS FOULED	1. PCV system malfunction.	1. Check system and repair as necessary. (Refer to 25 - EMISSIONS CONTROL/ EVAPORATIVE EMISSIONS/PCV VALVE - DIAGNOSIS AND TESTING)
	2. Worn, scuffed or broken rings.	2. Hone cylinder bores. Install new rings.
	3. Carbon in oil ring slots.	3. Install new rings.
	4. Rings fitted too tightly in grooves.	4. Remove rings and check grooves. If groove is not proper width, replace piston.
	5. Worn valve guide(s).	5. Replace cylinder head assembly.
	6. Valve stem seal(s) worn or damaged.	6. Replace seal(s).

DIAGNOSIS AND TESTING - ENGINE OIL LEAK INSPECTION

Begin with a thorough visual inspection of the engine, particularly at the area of the suspected leak. If an oil leak source is not readily identifiable, the following steps should be followed:

(1) Do not clean or degrease the engine at this time because some solvents may cause rubber to swell, temporarily stopping the leak.

(2) Add an oil soluble dye (use as recommended by manufacturer). Start the engine and let idle for approximately 15 minutes. Check the oil dipstick to make sure the dye is thoroughly mixed as indicated with a bright yellow color under a black light.

(3) Using a black light, inspect the entire engine for fluorescent dye, particularly at the suspected area of oil leak. If the oil leak is found and identified, repair as necessary.

(4) If dye is not observed, drive the vehicle at various speeds for approximately 24 km (15 miles), and repeat inspection.

(5) **If the oil leak source is not positively identified at this time**, proceed with the air leak detection test method as follows:

- Disconnect the fresh air hose (make-up air) at the cylinder head cover and plug or cap the outlet on the cover.
- Remove the PCV valve hose from the cylinder head cover. Cap or plug the PCV valve outlet on the cover.
- Attach an air hose with pressure gauge and regulator to the dipstick tube.

CAUTION: Do not subject the engine assembly to more than 20.6 kpa (3 PSI) of test pressure.

- Gradually apply air pressure from 1 psi to 2.5 psi maximum while applying soapy water at the suspected source. Adjust the regulator to the suitable test pressure that provides the best bubbles which will pinpoint the leak source. If the oil leak is detected and identified, repair per service manual procedures.
- If the leakage occurs at the crankshaft rear oil seal area, refer to the section, Inspection for Rear Seal Area Leak.

(6) If no leaks are detected, turn off the air supply. Remove the air hose, all plugs, and caps. Install the PCV valve and fresh air hose (make-up air). Proceed to next step.

(7) Clean the oil off the suspect oil leak area using a suitable solvent. Drive the vehicle at various speeds approximately 24 km (15 miles). Inspect the engine for signs of an oil leak by using a black light.

NOTE: If oil leakage is observed at the dipstick tube to block location; remove the tube, clean and reseal using Mopar® Stud & Bearing Mount (press fit tube applications only), and for O-ring style tubes, remove tube and replace the O-ring seal.

INSPECTION FOR REAR SEAL AREA LEAKS

Since it is sometimes difficult to determine the source of an oil leak in the rear seal area of the engine, a more involved inspection is necessary. The following steps should be followed to help pinpoint the source of the leak.

If the leakage occurs at the crankshaft rear oil seal area:

(1) Disconnect the battery.

(2) Raise the vehicle.

(3) Remove torque converter or clutch housing cover and inspect rear of block for evidence of oil. Use a black light to check for the oil leak. If a leak is present in this area, remove transmission for further inspection.

(a) Circular spray pattern generally indicates seal leakage or crankshaft damage.

(b) Where leakage tends to run straight down, possible causes are a porous block, oil gallery cup plug, bedplate to cylinder block mating surfaces and seal bore. See proper repair procedures for these items.

(4) If no leaks are detected, pressurize the crankcase as previously described.

CAUTION: Do not exceed 20.6 kPa (3 psi).

(5) If the leak is not detected, very slowly turn the crankshaft and watch for leakage. If a leak is detected between the crankshaft and seal while slowly turning the crankshaft, it is possible the crankshaft seal surface is damaged. The seal area on the crankshaft could have minor nicks or scratches that can be polished out with emery cloth.

CAUTION: Use extreme caution when crankshaft polishing is necessary to remove minor nicks and scratches. The crankshaft seal flange is especially machined to complement the function of the rear oil seal.

(6) For bubbles that remain steady with shaft rotation, no further inspection can be done until disassembled.

(7) After the oil leak root cause and appropriate corrective action have been identified, replace component(s) as necessary.

DIAGNOSIS AND TESTING - CYLINDER COMPRESSION PRESSURE TEST

The results of a cylinder compression pressure test can be utilized to diagnose several engine malfunctions.

Ensure the battery is completely charged and the engine starter motor is in good operating condition. Otherwise the indicated compression pressures may not be valid for diagnosis purposes.

(1) Check engine oil level and add oil if necessary.

(2) Drive the vehicle until engine reaches normal operating temperature. Select a route free from traffic and other forms of congestion, observe all traffic laws, and accelerate through the gears several times briskly.

(3) Remove all spark plugs from engine. As spark plugs are being removed, check electrodes for abnormal firing indicators fouled, hot, oily, etc. Record cylinder number of spark plug for future reference.

(4) Remove the Auto Shutdown (ASD) relay from the PDC.

(5) Be sure throttle blade is fully open during the compression check.

(6) Insert compression gauge adaptor Special Tool 8116 or the equivalent, into the #1 spark plug hole in cylinder head. Connect the 0–500 psi (Blue) pressure transducer (Special Tool CH7059) with cable adaptors to the DRBIII®. For Special Tool identification, (Refer to 9 - ENGINE - SPECIAL TOOLS).

(7) Crank engine until maximum pressure is reached on gauge. Record this pressure as #1 cylinder pressure.

(8) Repeat the previous step for all remaining cylinders.

(9) Compression should not be less than 689 kPa (100 psi) and not vary more than 25 percent from cylinder to cylinder.

(10) If one or more cylinders have abnormally low compression pressures, repeat the compression test.

(11) If the same cylinder or cylinders repeat an abnormally low reading on the second compression test, it could indicate the existence of a problem in the cylinder in question. **The recommended compression pressures are to be used only as a guide to diagnosing engine problems. An engine should not be disassembled to determine the cause of low compression unless some malfunction is present.**

DIAGNOSIS AND TESTING - CYLINDER COMBUSTION PRESSURE LEAKAGE TEST

The combustion pressure leakage test provides an accurate means for determining engine condition.

Combustion pressure leakage testing will detect:

- Exhaust and intake valve leaks (improper seating).
- Leaks between adjacent cylinders or into water jacket.
- Any causes for combustion/compression pressure loss.

WARNING: DO NOT REMOVE THE PRESSURE CAP WITH THE SYSTEM HOT AND UNDER PRESSURE BECAUSE SERIOUS BURNS FROM COOLANT CAN OCCUR.

Check the coolant level and fill as required. DO NOT install the pressure cap.

Start and operate the engine until it attains normal operating temperature, then turn the engine OFF.

Clean spark plug recesses with compressed air.

Remove the spark plugs.

Remove the oil filler cap.

Remove the air cleaner.

ENGINE 2.4L (Continued)

Calibrate the tester according to the manufacturer's instructions. The shop air source for testing should maintain 483 kPa (70 psi) minimum, 1,379 kPa (200 psi) maximum, with 552 kPa (80 psi) recommended.

Perform the test procedures on each cylinder according to the tester manufacturer's instructions. While testing, listen for pressurized air escaping through the throttle body, tailpipe and oil filler cap opening. Check for bubbles in the coolant.

All gauge pressure indications should be equal, with no more than 25% leakage per cylinder.

FOR EXAMPLE: At 552 kPa (80 psi) input pressure, a minimum of 414 kPa (60 psi) should be maintained in the cylinder.

STANDARD PROCEDURE

STANDARD PROCEDURE - ENGINE CORE AND OIL GALLERY PLUGS

Using a blunt tool such as a drift and a hammer, strike the bottom edge of the cup plug. With the cup plug rotated, grasp firmly with pliers or other suitable tool and remove plug (Fig. 2).

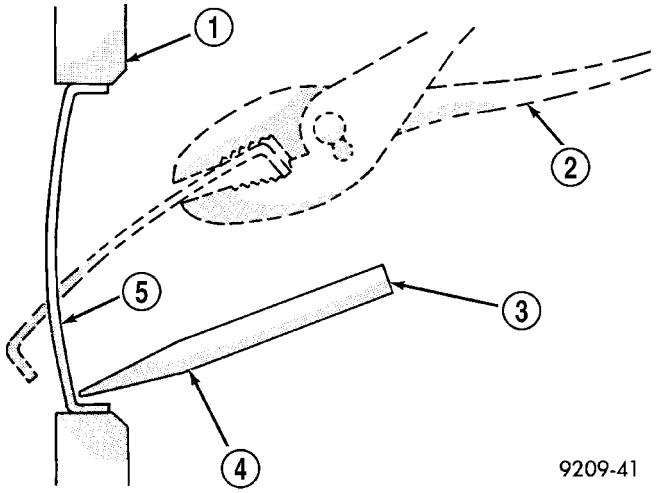

Fig. 2 Core Hole Plug Removal

1 - CYLINDER BLOCK
2 - REMOVE PLUG WITH PLIERS
3 - STRIKE HERE WITH HAMMER
4 - DRIFT PUNCH
5 - CUP PLUG

CAUTION: Do not drive cup plug into the casting as restricted cooling can result and cause serious engine problems.

Thoroughly clean inside of cup plug hole in cylinder block or head. Be sure to remove old sealer. Lightly coat inside of cup plug hole with Mopar® Stud and Bearing Mount. Make certain the new plug is cleaned of all oil or grease. Using proper drive plug, drive plug into hole so that the sharp edge of the plug is at least 0.5 mm (0.020 in.) inside the lead-in chamfer.

It is not necessary to wait for curing of the sealant. The cooling system can be refilled and the vehicle placed in service immediately.

STANDARD PROCEDURE - REPAIR OF DAMAGED OR WORN THREADS

Damaged or worn threads (excluding spark plug and camshaft bearing cap attaching threads) can be repaired. Essentially, this repair consists of drilling out worn or damaged threads, tapping the hole with a special Heli-Coil Tap, (or equivalent) and installing an insert into the tapped hole. This brings the hole back to its original thread size.

CAUTION: Be sure that the tapped holes maintain the original center line.

Heli-Coil tools and inserts are readily available from automotive parts jobbers.

HYDROSTATIC LOCKED ENGINE

When an engine is suspected to be hydrostatically locked, regardless of what caused the problem, the following steps should be used.

CAUTION: DO NOT use starter motor to rotate the engine, severe damage may occur.

(1) Inspect air cleaner, induction system and intake manifold to insure system is dry and clear of foreign material.

(2) Remove negative battery cable.

(3) Place a shop towel around the spark plugs when removing them from the engine. This will catch any fluid that may possibly be in the cylinder under pressure.

(4) With all spark plugs removed, rotate engine crankshaft using a breaker bar and socket.

(5) Identify the fluid in the cylinder(s) (i.e., coolant, fuel, oil or other).

(6) Make sure all fluid has been removed from the cylinders. Inspect engine for damage (i.e., connecting rods, pistons, valves, etc.)

(7) Repair engine or components as necessary to prevent this problem from re-occurring.

CAUTION: Squirt approximately one teaspoon of oil into the cylinders, rotate engine to lubricate the cylinder walls to prevent damage on restart.

(8) Install new spark plugs.

(9) Drain engine oil and remove oil filter.

(10) Install a new oil filter.

(11) Fill engine with specified amount of approved oil.

(12) Connect negative battery cable.

(13) Start engine and check for any leaks.

FORM-IN-PLACE GASKETS AND SEALERS

There are numerous places where form-in-place gaskets are used on the engine. Care must be taken when applying form-in-place gaskets to assure obtaining the desired results. **Do not use form-in-place gasket material unless specified.** Bead size, continuity, and location are of great importance. Too thin a bead can result in leakage while too much can result in spill-over which can break off and obstruct fluid feed lines. A continuous bead of the proper width is essential to obtain a leak-free gasket.

There are numerous types of form-in-place gasket materials that are used in the engine area. Mopar® Engine RTV GEN II, Mopar® ATF-RTV, and Mopar® Gasket Maker gasket materials, each have different properties and can not be used in place of the other.

MOPAR® ENGINE RTV GEN II is used to seal components exposed to engine oil. This material is a specially designed black silicone rubber RTV that retains adhesion and sealing properties when exposed to engine oil. Moisture in the air causes the material to cure. This material is available in three ounce tubes and has a shelf life of one year. After one year this material will not properly cure. Always inspect the package for the expiration date before use.

MOPAR® ATF RTV is a specifically designed black silicone rubber RTV that retains adhesion and sealing properties to seal components exposed to automatic transmission fluid, engine coolants, and moisture. This material is available in three ounce tubes and has a shelf life of one year. After one year this material will not properly cure. Always inspect the package for the expiration date before use.

MOPAR® GASKET MAKER is an anaerobic type gasket material. The material cures in the absence of air when squeezed between two metallic surfaces. It will not cure if left in the uncovered tube. The anaerobic material is for use between two machined surfaces. Do not use on flexible metal flanges.

MOPAR® BED PLATE SEALANT is a unique (green-in-color) anaerobic type gasket material that is specially made to seal the area between the bed plate and cylinder block without disturbing the bearing clearance or alignment of these components. The material cures slowly in the absence of air when torqued between two metallic surfaces, and will rapidly cure when heat is applied.

MOPAR® GASKET SEALANT is a slow drying, permanently soft sealer. This material is recommended for sealing threaded fittings and gaskets against leakage of oil and coolant. Can be used on threaded and machined parts under all temperatures. This material is used on engines with multi-layer steel (MLS) cylinder head gaskets. This material also will prevent corrosion. Mopar® Gasket Sealant is available in a 13 oz. aerosol can or 4oz./16 oz. can w/applicator.

SEALER APPLICATION

Mopar® Gasket Maker material should be applied sparingly 1 mm (0.040 in.) diameter or less of sealant to one gasket surface. Be certain the material surrounds each mounting hole. Excess material can easily be wiped off. Components should be torqued in place within 15 minutes. The use of a locating dowel is recommended during assembly to prevent smearing material off the location.

Mopar® Engine RTV GEN II or ATF RTV gasket material should be applied in a continuous bead approximately 3 mm (0.120 in.) in diameter. All mounting holes must be circled. For corner sealing, a 3.17 or 6.35 mm (1/8 or 1/4 in.) drop is placed in the center of the gasket contact area. Uncured sealant may be removed with a shop towel. Components should be torqued in place while the sealant is still wet to the touch (within 10 minutes). The usage of a locating dowel is recommended during assembly to prevent smearing material off the location.

Mopar® Gasket Sealant in an aerosol can should be applied using a thin, even coat sprayed completely over both surfaces to be joined, and both sides of a gasket. Then proceed with assembly. Material in a can w/applicator can be brushed on evenly over the sealing surfaces. Material in an aerosol can should be used on engines with multi-layer steel gaskets.

STANDARD PROCEDURE - ENGINE GASKET SURFACE PREPARATION

To ensure engine gasket sealing, proper surface preparation must be performed, especially with the use of aluminum engine components and multi-layer steel cylinder head gaskets.

Never use the following to clean gasket surfaces:

- Metal scraper
- Abrasive pad or paper to clean cylinder block and head
- High speed power tool with an abrasive pad or a wire brush (Fig. 3)

NOTE: Multi-Layer Steel (MLS) head gaskets require a scratch free sealing surface.

Only use the following for cleaning gasket surfaces:

- Solvent or a commercially available gasket remover
- Plastic or wood scraper (Fig. 3)

ENGINE 2.4L (Continued)

• Drill motor with 3M Roloc™ Bristle Disc (white or yellow) (Fig. 3)

CAUTION: Excessive pressure or high RPM (beyond the recommended speed), can damage the sealing surfaces. The mild (white, 120 grit) bristle disc is recommended. If necessary, the medium (yellow, 80 grit) bristle disc may be used on cast iron surfaces with care.

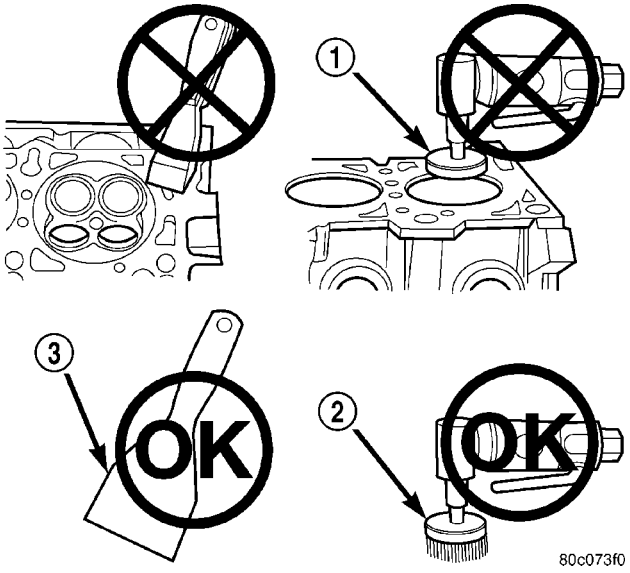

Fig. 3 Proper Tool Usage For Surface Preparation

1 - ABRASIVE PAD
2 - 3M ROLOC™ BRISTLE DISC
3 - PLASTIC/WOOD SCRAPER

STANDARD PROCEDURE - MEASURING BEARING CLEARANCE USING PLASTIGAGE

Engine crankshaft bearing clearances can be determined by use of Plastigage or equivalent. The following is the recommended procedure for the use of Plastigage:

(1) Remove oil film from surface to be checked. Plastigage is soluble in oil.

(2) Place a piece of Plastigage across the entire width of the bearing shell in the cap approximately 6.35 mm (1/4 in.) off center and away from the oil holes (Fig. 4). (In addition, suspected areas can be checked by placing the Plastigage in the suspected area). Torque the bearing cap/bed plate bolts of the bearing being checked to the proper specifications.

(3) Remove the bearing cap and compare the width of the flattened Plastigage with the metric scale provided on the package. Locate the band closest to the same width. This band shows the amount of clearance in thousandths of a millimeter. Differences in readings between the ends indicate the amount of taper present. Record all readings taken. Compare the clearance measurements to specsifications found in the engine specifications table(Refer to

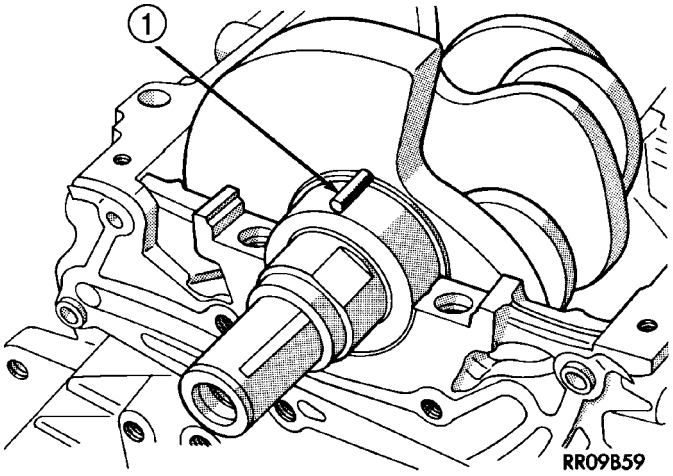

Fig. 4 Plastigage Placed in Lower Shell—Typical

1 - PLASTIGAGE

9 - ENGINE - SPECIFICATIONS). **Plastigage generally is accompanied by two scales. One scale is in inches, the other is a metric scale.**

NOTE: Plastigage is available in a variety of clearance ranges. Use the most appropriate range for the specifications you are checking.

(4) Install the proper crankshaft bearings to achieve the specified bearing clearances.

REMOVAL - ENGINE ASSEMBLY

(1) Perform fuel pressure release procedure (Refer to 14 - FUEL SYSTEM/FUEL DELIVERY - STANDARD PROCEDURE)

(2) Disconnect battery negative cable.

(3) Remove air cleaner housing and inlet tube.

(4) Disconnect the fuel line from fuel rail. (Refer to 14 - FUEL SYSTEM/FUEL DELIVERY/FUEL LINES - STANDARD PROCEDURE)

(5) Disconnect all vacuum hoses.

(6) Drain cooling system. (Refer to 7 - COOLING - STANDARD PROCEDURE)

(7) Remove radiator fans. (Refer to 7 - COOLING/ ENGINE/RADIATOR FAN - REMOVAL)

(8) Remove radiator upper and lower hoses.

NOTE: When the transaxle cooler lines are removed from the rolled-groove type fittings at the transaxle, damage to the inner wall of the hose will occur. To prevent prevent potential leakage, the cooler hoses must be cut off flush at the transaxle fitting, and a service cooler hose splice kit must be installed upon reassembly.

ENGINE 2.4L (Continued)

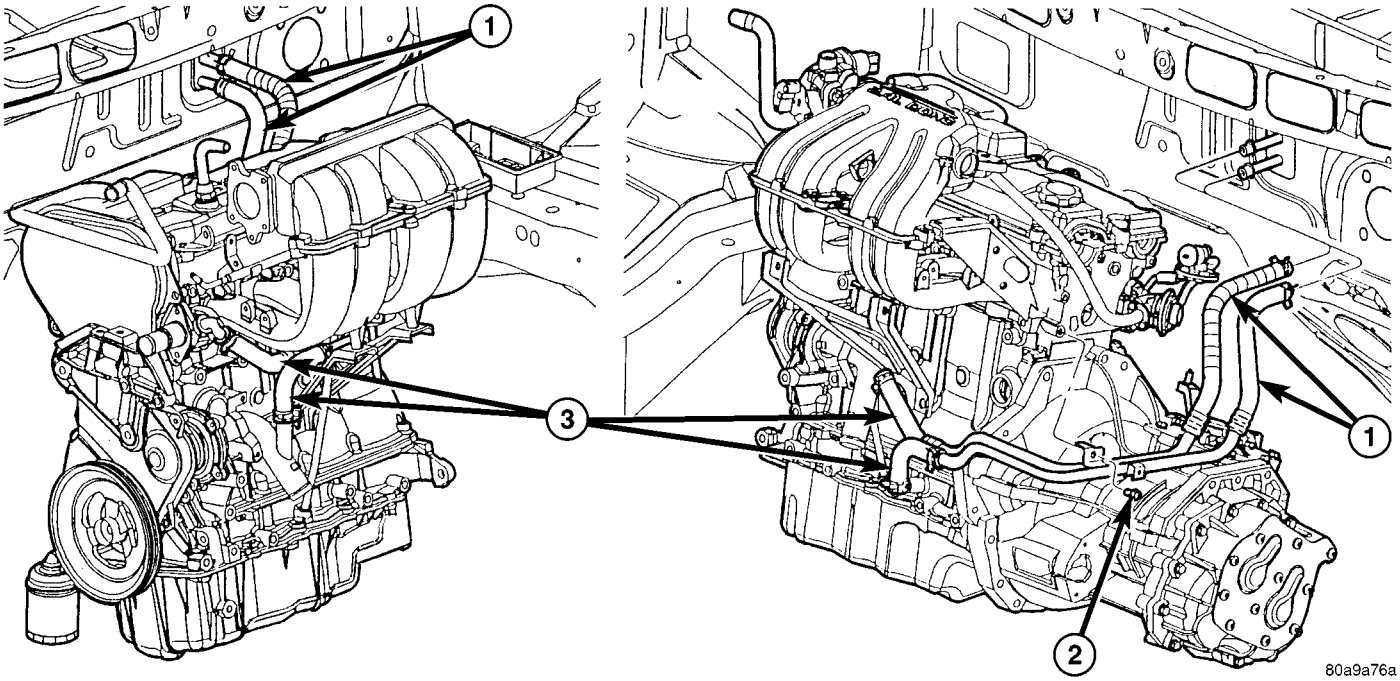

Fig. 5 HEATER HOSES - 2.4L

1 - HEATER HOSES TO HEATER
2 - BOLT - HEATER TUBE SUPPORT
3 - HEATER HOSE TO ENGINE - SUPPLY AND RETURN

(9) Using a blade or suitable hose cutter, cut transaxle oil cooler lines off flush with fittings. Plug cooler lines and fittings to prevent debris from entering transaxle or cooler circuit. A service splice kit will be installed upon reassembly.

(10) Disconnect transmission shift linkage and electrical connectors.

(11) Disconnect throttle body linkage.

(12) Disconnect engine wiring harness.

(13) Disconnect heater hoses from heater (Fig. 5).

(14) Discharge air conditioning system. (Refer to 24 - HEATING & AIR CONDITIONING/PLUMBING - STANDARD PROCEDURE)

(15) Hoist vehicle and remove front wheels and tires.

(16) Remove accessory drive belt splash shield.

(17) Remove accessory drive belts. (Refer to 7 - COOLING/ACCESSORY DRIVE/DRIVE BELTS - REMOVAL)

(18) Remove axle shafts. (Refer to 3 - DIFFERENTIAL & DRIVELINE/HALF SHAFT - REMOVAL)

(19) Drain engine oil and remove oil filter. (Refer to 9 - ENGINE/LUBRICATION/OIL - STANDARD PROCEDURE)

(20) Remove crossmember cradle plate (Fig. 6).

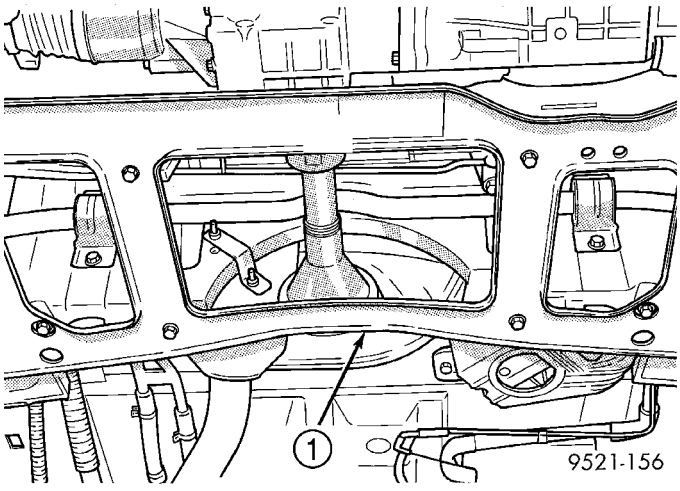

Fig. 6 Crossmember Cradle Plate

1 - CRADLE PLATE

(21) Disconnect exhaust pipe from manifold (Fig. 7).

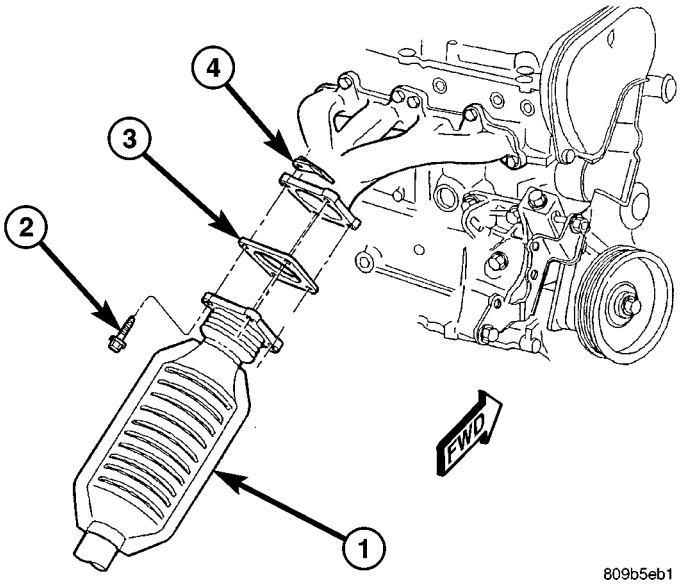

Fig. 7 Catalytic Converter to Exhaust Manifold

1 - CATALYTIC CONVERTER
2 - BOLT
3 - GASKET
4 - FLAG NUT

(22) Remove engine front mount and bracket from engine. (Refer to 9 - ENGINE/ENGINE MOUNTING/ FRONT MOUNT - REMOVAL)

(23) Remove structural collar. (Refer to 9 - ENGINE/ENGINE BLOCK/STRUCTURAL COVER - REMOVAL)

(24) Remove rear engine mount bracket. (Refer to 9 - ENGINE/ENGINE MOUNTING/REAR MOUNT - REMOVAL)

(25) Mark flex plate to torque converter and remove torque converter bolts.

(26) Pinch-off power steering supply hose at pump. Remove hose from pump.

(27) Remove and set aside the power steering pump and bracket. Do not disconnect pressure line.

(28) Lower vehicle.

(29) Remove A/C lines at compressor and cap openings.

(30) Remove engine ground straps (strap at engine right mount and at starter).

(31) Raise vehicle enough to allow engine dolly Special Tool 6135, cradle Special Tool 6710 with Posts Special Tool 6848 to be installed under vehicle (Fig. 8).

(32) Loosen cradle posts to allow movement for proper positioning. Locate two rear posts (right side of engine) into the holes on the engine bedplate. Locate the two front posts (left side of engine) on the oil pan rails (Fig. 8). Lower vehicle and position cradle mounts until the engine is resting on mounts. Tighten mounts to cradle frame. This will keep mounts from moving when removing or installing engine and transmission.

(33) Install safety straps around the engine to cradle. Tighten straps and lock.

(34) Lower vehicle so the weight of **ONLY THE ENGINE AND TRANSMISSION** are on the cradle.

(35) Remove engine and transmission mount bolts.

(36) Raise vehicle slowly. It may be necessary to move the engine/transmission assembly with the dolly to allow for removal around the body.

INSTALLATION - ENGINE ASSEMBLY

(1) Position engine and transmission assembly under vehicle and slowly lower the vehicle over the engine and transmission.

(2) Align engine and transmission mounts to attaching points. Install mounting bolts at the right (Fig. 9) and left mounts (Fig. 10).

(3) Remove safety straps.

(4) Slowly raise vehicle enough to remove the engine dolly and cradle Special Tools 6135 and 6710.

(5) Install rear mount bracket and rear mount through bolt. (Refer to 9 - ENGINE/ENGINE MOUNTING/REAR MOUNT - INSTALLATION)

(6) Install the flex plate to torque converter bolts.

(7) Install structural collar. (Refer to 9 - ENGINE/ ENGINE BLOCK/STRUCTURAL COVER - INSTALLATION)

(8) Install front mount bracket and front mount through bolt. (Refer to 9 - ENGINE/ENGINE MOUNTING/FRONT MOUNT - INSTALLATION)

(9) Connect exhaust system to manifold (Fig. 7).

(10) Install crossmember cradle plate (Fig. 6).

(11) Install new oil filter.

(12) Install power steering pump and bracket.

(13) Connect power steering supply line to pump and remove pinch-off pliers.

(14) Connect A/C compressor hoses to compressor.

(15) Install accessory drive belts. (Refer to 7 - COOLING/ACCESSORY DRIVE/DRIVE BELTS - INSTALLATION)

(16) Install axle shafts. (Refer to 3 - DIFFERENTIAL & DRIVELINE/HALF SHAFT - INSTALLATION)

(17) Install accessory drive belt splash shield.

(18) Install front wheels and tires.

(19) Remove plugs from transmission cooler hoses and install transaxle oil cooler line service splice kit. Refer to instructions included with kit.

(20) Connect the transaxle shift linkage and electrical connectors.

(21) Connect heater hoses (Fig. 5).

(22) Install ground straps.

(23) Connect all engine and throttle body electrical connections.

ENGINE 2.4L (Continued)

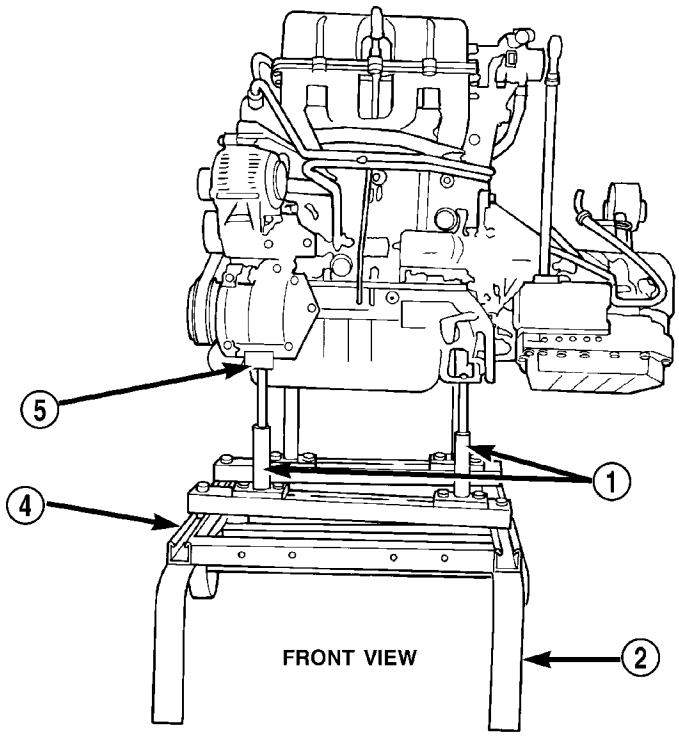

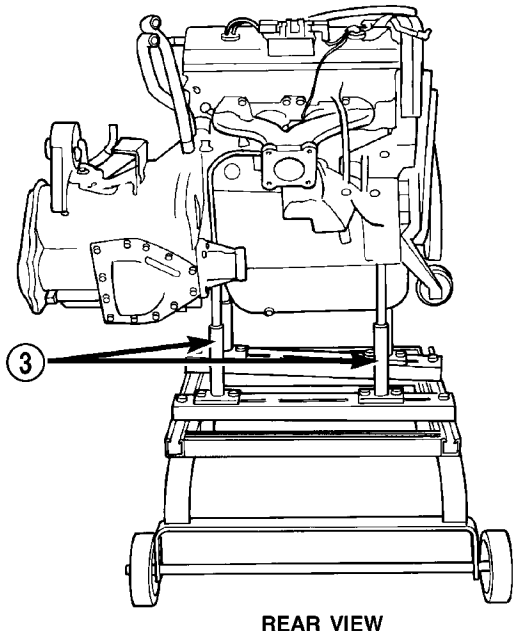

80a624d9

Fig. 8 Positioning Engine Cradle Support Post Mounts

1 - SPECIAL TOOL POSTS 6848
2 - SPECIAL TOOL 6135 DOLLY
3 - SPECIAL TOOL POSTS 6848
4 - SPECIAL TOOL 6710 CRADLE
5 - SPECIAL TOOL 6848 - POST CONTACT ON PAN RAIL

ENGINE 2.4L (Continued)

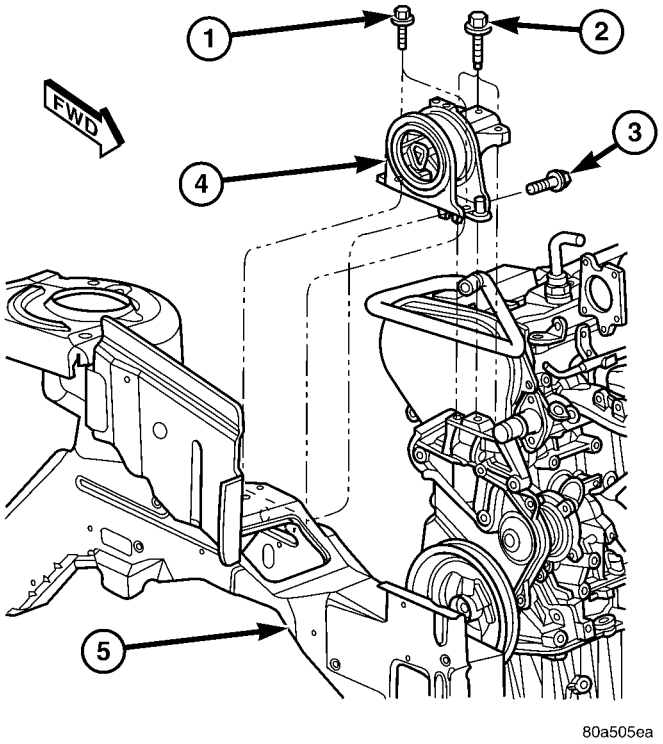

Fig. 9 RIGHT MOUNT TO RAIL AND ENGINE

1 - BOLT - MOUNT TO RAIL 68 N·m (50 ft. lbs.)
2 - BOLT - MOUNT TO ENGINE 54 N·m (40 ft. lbs.)
3 - BOLT - MOUNT TO RAIL (HORIZONTAL) 68 N·m (50 ft. lbs.)
4 - RIGHT ENGINE MOUNT
5 - RIGHT FRAME RAIL

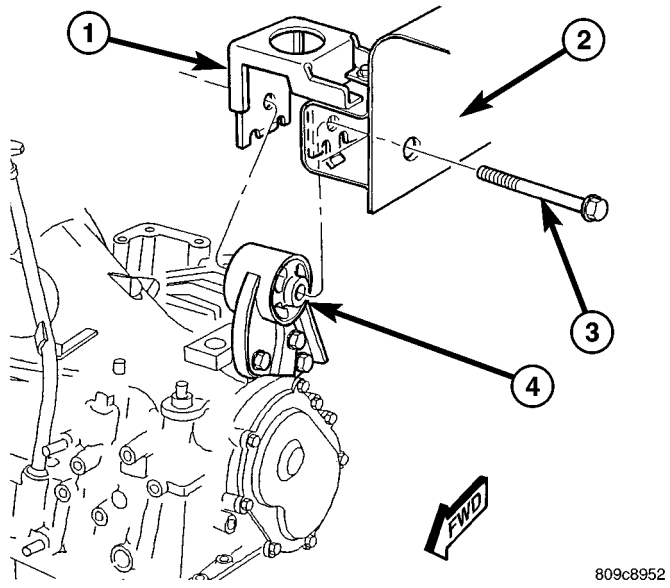

Fig. 10 LEFT MOUNT TO FRAME BRACKET

1 - FRAME BRACKET
2 - FRAME RAIL - LEFT
3 - BOLT
4 - TRANSAXLE MOUNT

(24) Connect all vacuum lines.
(25) Connect the throttle cables.
(26) Connect the fuel line. (Refer to 14 - FUEL SYSTEM/FUEL DELIVERY/QUICK CONNECT FITTING - STANDARD PROCEDURE)
(27) Connect radiator lower and upper hoses.
(28) Install radiator fans. (Refer to 7 - COOLING/ENGINE/RADIATOR FAN - INSTALLATION)
(29) Fill cooling system. (Refer to 7 - COOLING - STANDARD PROCEDURE)
(30) Connect battery cables.
(31) Install air cleaner and inlet hose.
(32) Fill engine crankcase with proper oil to correct level.
(33) Start engine and run until operating temperature is reached.
(34) Adjust transmission linkage, if necessary.

SPECIFICATIONS

SPECIFICATIONS - 2.4L ENGINE

GENERAL SPECIFICATIONS

DESCRIPTION	SPECIFICATION	
Type	In-Line OHV, DOHC	
Number of Cylinders	4	
Firing Order	1-3-4-2	
Compression Ratio	9.5:1	
Max. Variation Between Cylinders	25%	
	Metric	**Standard**
Displacement	2.4 Liters	148 cu. in.
Bore	87.5 mm	3.445 in.
Stroke	101.0 mm	3.976 in.
Compression Pressure	1172-1551 kPa	170-225 psi

CYLINDER BLOCK

DESCRIPTION	SPECIFICATIONS	
	Metric	**Standard**
Cylinder Bore Diameter	87.4924 - 87.5076 mm	3.4446 - 3.4452 in.
Out-of-Round (Max.)	0.051 mm	0.002 in.
Taper (Max.)	0.051 mm	0.002 in.

ENGINE 2.4L (Continued)

PISTONS

DESCRIPTION	SPECIFICATION	
	Metric	Standard
Piston Diameter	87.463 - 87.481 mm	3.4434 -3.4441 in.
Clearance @ 14 mm (0.551 in.) from bottom of skirt	0.024 - 0.057 mm	0.0009 - 0.0022 in.
Weight	331 - 339 grams	11.67- 11.95 oz.
Land Clearance (Diametrical)	0.614 - 0.664 mm	0.024 - 0.026 in.
Piston Length	66.25 mm	2.608 in.
Piston Ring Groove Depth No. 1	4.640 - 4.784 mm	0.182 - 0.188 in.
Piston Ring Groove Depth No. 2	4.575 - 4.719 mm	(0.180 - 0.185 in.)
Piston Ring Groove Depth No. 3	4.097 - 4.236 mm	0.161 - 0.166 in.

PISTON PINS

DESCRIPTION	SPECIFICATION	
	Metric	Standard
Clearance in Piston	0.005 - 0.018 mm	0.0002 - 0.0008 in.
Clearance in Connecting Rod	Interference	
Diameter	21.998 - 22.003 mm	0.8660 - 0.8662 in.
End Play	None	
Length	72.75 - 73.25 mm	2.864 - 2.883 in.

PISTON RINGS

DESCRIPTION	SPECIFICATION	
	Metric	Standard
Ring Gap		
Top Compression Ring	0.25 - 0.51 mm	0.0098 - 0.020 in.
Wear Limit	0.8 mm	0.031 in.
2nd Compression Ring	0.23 - 0.48 mm	0.009 - 0.018 in.
Wear Limit	0.8 mm	0.031 in.
Oil Control Steel Rails	0.25 - 0.64 mm	0.0098 - 0.025 in.
Wear Limit	1.00 mm	0.039 in.
Compression Rings	0.030 - 0.080 mm	0.0011 - 0.0031 in.
Wear Limit	0.10 mm	0.004 in.
Ring Side Clearance - Oil Ring Pack	0.012 - 0.178 mm	0.0004 - 0.0070 in.
Ring Width - Compression Rings	1.47 - 1.50 mm	0.057 - 0.059 in.
Ring Width - Oil Ring Pack	2.72 - 2.88 mm	0.107 - 0.1133 in.

CONNECTING ROD

DESCRIPTION	SPECIFICATION	
	Metric	Standard
Bearing Clearance	0.025 - 0.071 mm	0.0009 - 0.0027 in.
Wear Limit	0.075 mm	0.003 in.
Bore Diameter - Piston Pin	20.96 - 20.98 mm	0.8252 - 0.8260 in.
Bore Diameter - Crankshaft End	53.007 - 52.993 mm	2.0868 - 2.0863 in.
Side Clearance	0.13 - 0.38 mm	0.005 - 0.015 in.
Wear Limit	0.40 mm	0.016 in.
Weight - Total (Less Bearing)	565.8 grams	19.96 oz.

ENGINE 2.4L (Continued)

CRANKSHAFT

DESCRIPTION	SPECIFICATION	
	Metric	Standard
Connecting Rod Journal Diameter	49.984 - 50.000 mm	1.968 - 1.9685 in.
Main Bearing Journal Diameter	59.992 - 60.008 mm	2.362 - 2.3625 in.
Journal Out-of-Round (Max.)	0.0035 mm	0.0003 in.
Journal Taper (Max.)	0.007 mm	0.0001 in.
End Play	0.09 - 0.24 mm	0.0035 - 0.0094 in.
Wear Limit	0.38 mm	0.015 in.
Main Bearing Diametrical Clearance	0.018 - 0.062 mm	0.0007 - 0.0024 in.

HYDRAULIC LASH ADJUSTER

DESCRIPTION	SPECIFICATION	
	Metric	Standard
Body Diameter	15.901 - 15.913 mm	0.626 - 0.6264 in.
Plunger Travel Minimum (Dry)	3.0 mm	0.118 in.

CYLINDER HEAD CAMSHAFT BEARING BORE DIAMETER

DSECRIPTION	SPECIFICATION	
	Metric	Standard
Journals No.1 - 6	26.020 - 26.041 mm	1.024 - 1.025 in.

CAMSHAFT

DESCRIPTION	SPECIFICATION	
	Metric	Standard
Journal Diameter No. 1 - 6	25.951 - 25.970 mm	1.021 - 1.022 in.
Bearing Clearance - Diametrical	0.069 - 0.071 mm	0.0027 - 0.003 in.
End Play	0.05 - 0.17 mm	0.0019 - 0.0066 in.
Lift (Zero Lash)		
Intake	8.25 mm	0.324 in.
Exhaust	6.60 mm	0.259 in.
Intake Valve Timing*		
Closes (ABDC)	51°	
Opens (BTDC)	1°	
Duration	232°	
Exhaust Valve Timing*		
Closes (ATDC)	7°	
Opens (BBDC)	47°	
Duration	234°	
Valve Overlap	8°	
* All reading in degrees. Timing points @4° from top of ramp.		

CYLINDER HEAD

DESCRIPTION	SPECIFICATION	
	Metric	Standard
Material	Cast Aluminum	
Gasket Thickness (Compressed)	0.71 mm	0.028 in.

ENGINE 2.4L (Continued)

VALVE SEAT

DESCRIPTION	SPECIFICATION	
	Metric	Standard
Angle	44.5 - 45°	
Seat Diameter - Intake	34.37 - 34.63 mm	1.353 - 1.363 in.
Seat Diameter - Exhaust	27.06 - 27.32 mm	1.065 - 1.075 in.
Runout (Max.)	0.05 mm	0.002 in.
Valve Seat Width - Intake and Exhaust	0.9 - 1.3 mm	0.035 - 0.051 in.
Service Limit - Intake	2.0 mm	0.079 in.
Service Limit - Exhaust	2.5 mm	0.098 in.

VALVE GUIDE

DESCRIPTION	SPECIFICATION	
	Metric	Standard
Diameter I.D.	5.975 - 6.000 mm	0.235 - 0.236 in.
Guide Bore Diameter	11.0 - 11.02 mm	0.4330 - 0.4338 in.
Guide Height (spring seat to guide tip)	13.25 - 13.75 mm	0.521 - 0.541 in.

VALVES

DESCRIPTION	SPECIFICATION	
	Metric	Standard
Face Angle - Intake and Exhaust	44.5 - 45°	
Head Diameter - Intake	34.67 - 34.93 mm	1.364 - 1.375 in.
Head Diameter - Exhaust	28.32 - 28.52 mm	1.114 - 1.122 in.
Valve Length (Overall)		
Intake	112.76 - 113.32 mm	4.439 - 4.461 in.
Exhaust	110.89 - 111.69 mm	4.365 - 4.397 in.
Valve Stem Diameter		
Intake	5.934 - 5.952 mm	0.2337 - 0.2344 in.
Exhaust	5.906 - 5.924 mm	0.2326 - 0.2333 in.

VALVE MARGIN

DESCRIPTION	SPECIFICATION	
	Metric	Standard
Intake	1.2 - 1.7 mm	0.047 - 0.066 in.
Service Limit	0.95 mm	.0037 in.
Exhaust	0.985 - 1.315 mm	0.038 - 0.051 in.
Service Limit	1.05 mm	.039 in.

VALVE STEM TIP

DESCRIPTION	SPECIFICATION	
	Metric	Standard
Intake	48.04 mm	1.891 in.
Exhaust	47.99 mm	1.889 in.

VALVE STEM TO GUIDE CLEARANCE

DESCRIPTION	SPECIFICATION	
	Metric	Standard
Intake	0.048 - 0.066 mm	0.0018 - 0.0025 in.
Max. Allowable	0.076 mm	0.003 in.
Service Limit	0.25 mm	0.010 in.
Exhaust	0.0736 - 0.094 mm	0.0029 - 0.0037 in.
Max. Allowable	0.101 mm	0.004 in.
Service Limit	0.25 mm	0.010 in.

ENGINE 2.4L (Continued)

VALVE SPRINGS

DESCRIPTION	SPECIFICATION	
	Metric	Standard
Free Length (Approx.)	48.4 mm	1.905 in.
Nominal Force (Valve Closed)	338 N @ 38.0 mm	75.98 lbs. @ 1.496 in.
Nominal Force (Valve Open)	607 N @ 29.75 mm	136 lbs. @ 1.172 in.
Installed Height	38.00 mm	1.496 in.
Number of Coils	7.82	
Wire Diameter	3.86 mm	1.496 in

OIL PUMP

DESCRIPTION	SPECIFICATION	
	Metric	Standard
Clearance Over Rotors (Max.)	0.10 mm	0.004 in.
Cover Out-of-Flat (Max.)	0.025 mm	0.001 in.
Inner Rotor Thickness (Min.)	9.40 mm	0.370 in.
Outer Rotor Thickness (Min.)	9.40 mm	0.370 in.
Outer Rotor Clearance (Max.)	0.039 mm	0.015 in.
Outer Rotor Diameter (Min.)	79.95 mm	3.148 in.
Tip Clearance Between Rotors (Max.)	0.20 mm	0.008 in.

OIL PRESSURE

DESCRIPTION	SPECIFICATION	
	Metric	Standard
At Curb Idle Speed*	25 kPa	4 psi
At 3000 rpm	170 - 550 kPa	25 - 80 psi
CAUTION: *If pressure is ZERO at curb idle, DO NOT run engine at 3000 rpm.		

SPECIFICATIONS - TORQUE

DESCRIPTION	N·m	Ft. Lbs.	In. Lbs.
Balance Shaft Carrier to Block—Bolts	54	40	—
Balance Shaft Gear Cover—Double Ended Fastener	12	—	105
Balance Shaft Sprocket—Bolt	28	—	250
Balance Shaft Chain Tensioner—Bolts	12	—	105
Balance Shaft Carrier Cover—Bolts	12	—	105
Camshaft Sprocket—Bolt	101	75	—
Connecting Rod Cap—Bolts	27 +¼ turn	20 +¼ turn	—
Crankshaft Main Bearing Cap/Bedplate			
—M8 Bolts	28		250
—M11 Bolts	41 +¼ Turn	30 +¼ Turn	—
Crankshaft Damper	136	100	—
Cylinder Head—Bolts	(Refer to 9 - ENGINE/ CYLINDER HEAD - INSTALLATION)		
Cylinder Head Cover—Bolts	12	—	105
Flex Plate to Crankshaft	95	70	—
Engine Mount Bracket Right—Bolts	61	45	—
Engine Mounting—Bolts	(Refer to 9 ENGINE/ ENGINE MOUNTING)		
Exhaust Manifold to Cylinder Head—Bolts	19	—	170
Exhaust Manifold Heat Shield—Bolts	12	—	105
Intake Manifold - Lower —Bolts	28	—	250
Intake Manifold - Upper—Bolts	28	—	250
Oil Filter	12	—	105
Oil Pan—Bolts	12	—	105
Oil Pan Drain—Plug	28	20	—
Oil Pressure Switch	21	—	190

ENGINE 2.4L (Continued)

DESCRIPTION	N·m	Ft. Lbs.	In. Lbs.
Oil Pump to Block—Bolts	28	20	—
Oil Pump Cover Plate—Bolts	12	—	105
Oil Pump Pick-up Tube—Bolt	28	20	—
Oil Pump Relief Valve—Cap	41	30	—
Spark Plugs	18	13	—
Structural Collar	(Refer to 9 - ENGINE/ ENGINE BLOCK/ STRUCTURAL COVER - INSTALLATION)		
Timing Belt Covers			
- Front Covers to Rear Cover—Bolts	6	—	50
- Rear Cover—M6 Bolts	12	—	105
—M8 Bolts	28	—	250
Timing Belt Idler Pulley	61	45	—
Timing Belt Tensioner Lock Bolt	25	—	220
Timing Belt Tensioner Assembly—Bolts	61	45	—

SPECIAL TOOLS

2.4L ENGINE

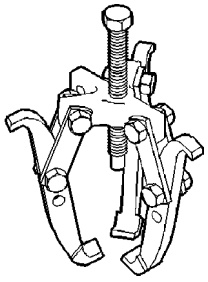

Puller 1026

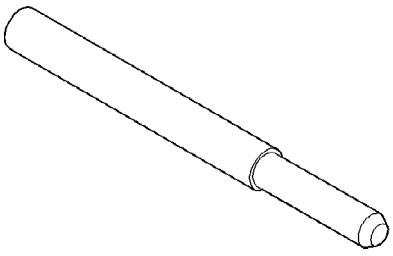

Crankshaft Damper Removal Insert 6827A

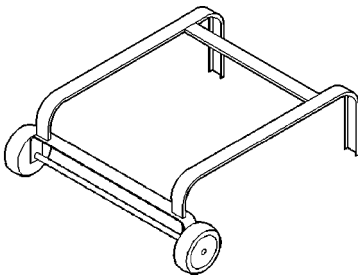

Dolly 6135

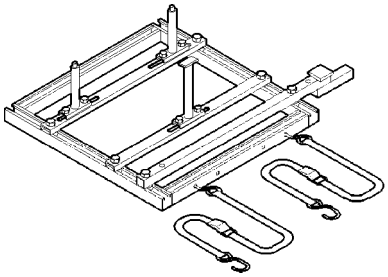

Cradle 6710A

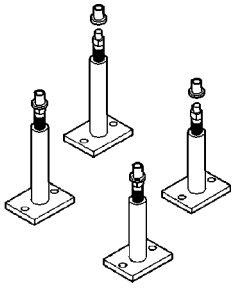

Post Kit Engine Cradle 6848

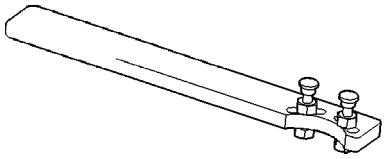

Camshaft Sprocket Holder 6847

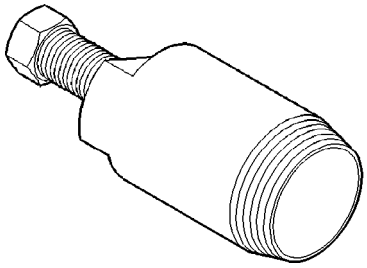

Camshaft Seal Remover C-4679A

ENGINE 2.4L (Continued)

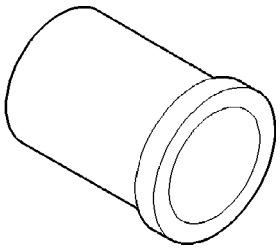

Camshaft Seal Installer MD-998306

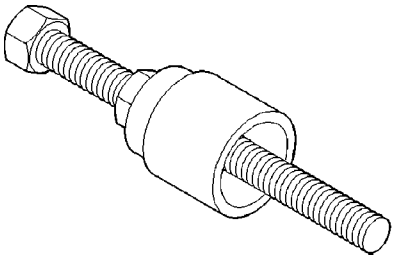

Crankshaft Damper/Sprocket Installer 6792

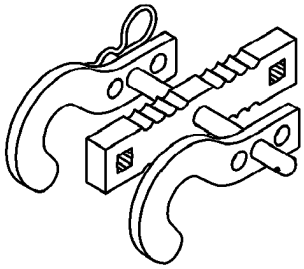

Valve Spring Compressor 8215-A

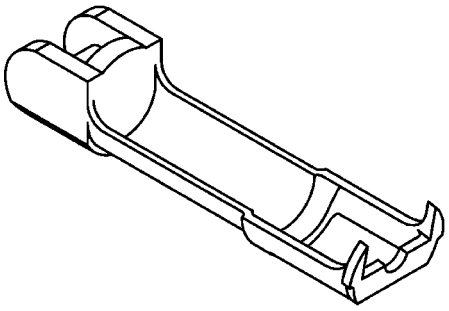

Adaptor 8436

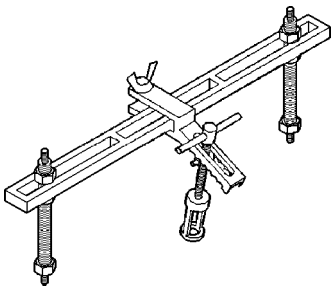

Valve Spring Compressor MD998772A

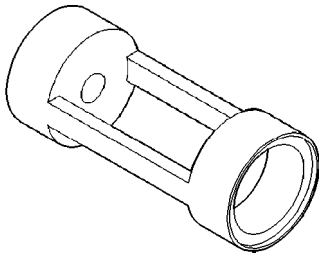

Valve Spring Compressor Adapter 6779

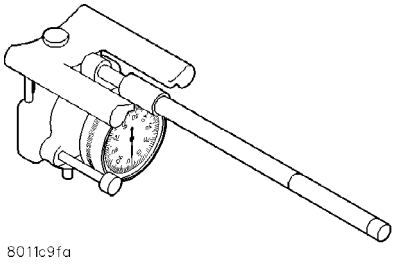

Indicator, Cylinder Bore C-119

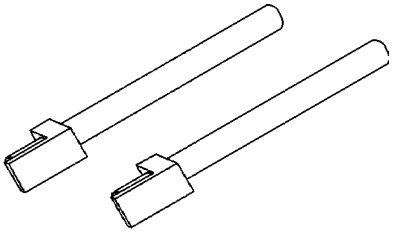

Connecting Rod Guides 8189

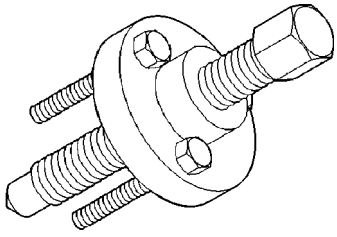

Crankshaft Sprocket Remover 6793

ENGINE 2.4L (Continued)

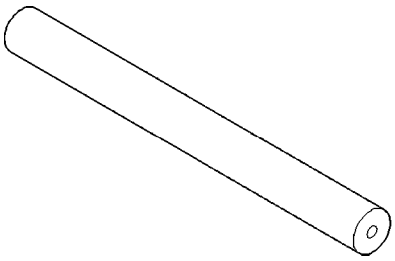

Crankshaft Sprocket Remover Insert C-4685-C2

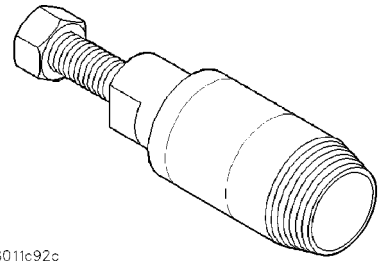

Front Crankshaft Oil Seal Remover 6771

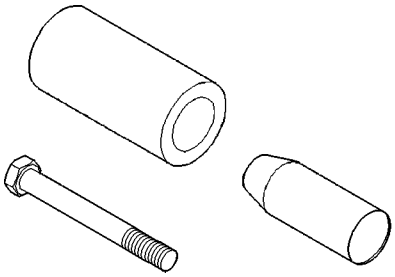

Front Crankshaft Oil Seal Installer 6780

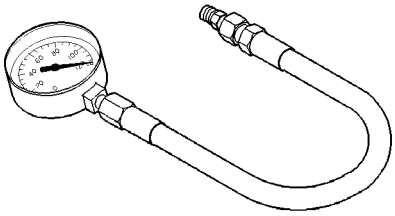

Oil Pressure Gauge C-3292

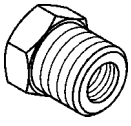

Adapter 8406

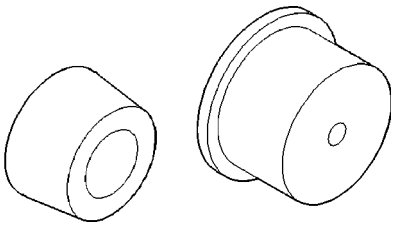

Rear Crankshaft Oil Seal Installer 6926

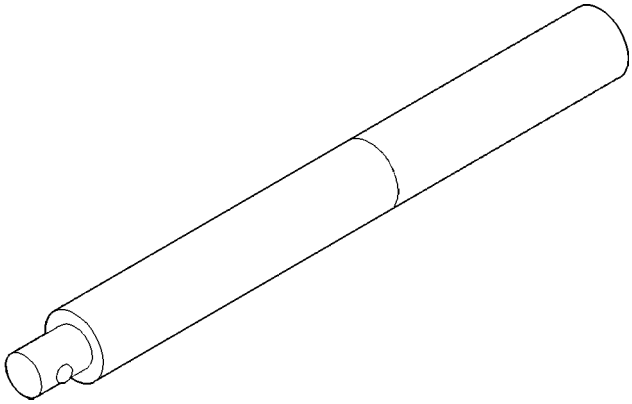

Driver Handle C-4171

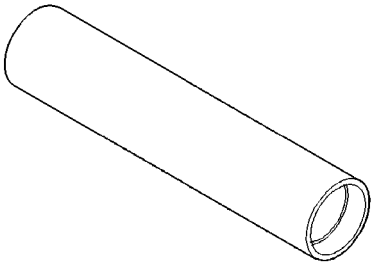

Balance Shaft Sprocket Installer 6052

ENGINE 2.4L (Continued)

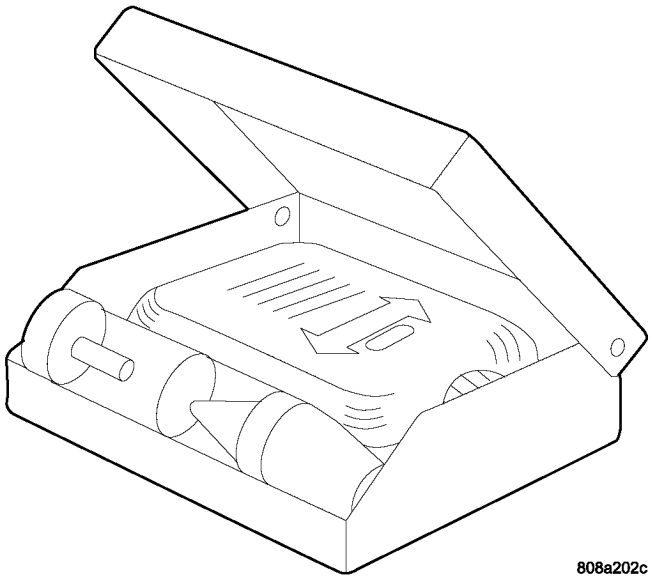

Combustion Leak Tester C-3685-A

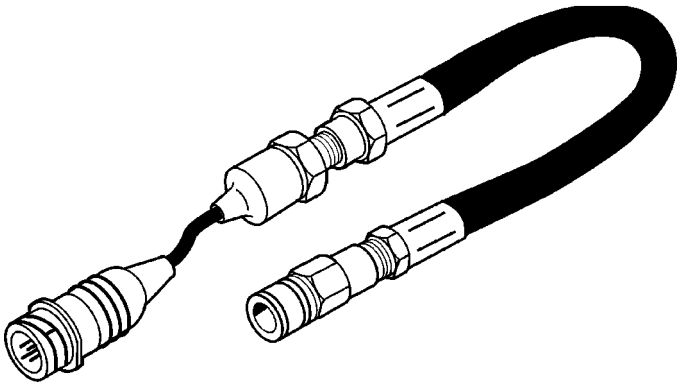

Pressure Transducer CH7059

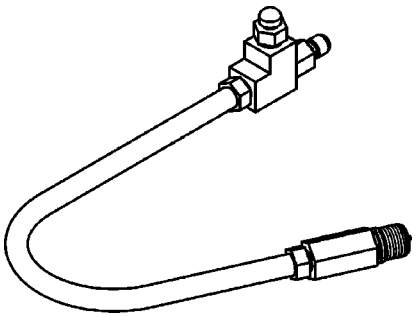

Cylinder Compression Pressure Adaptor 8116

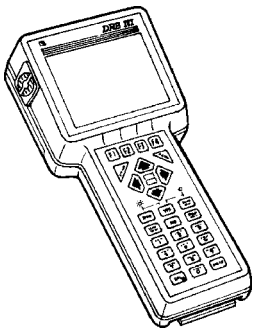

DRB III® with PEP Module OT-CH6010A

AIR CLEANER ELEMENT

REMOVAL

(1) Unsnap 2 clips.

(2) Lift cover and pull toward the engine and remove cover tabs from air box.

(3) Lift cover and remove the element (Fig. 11).

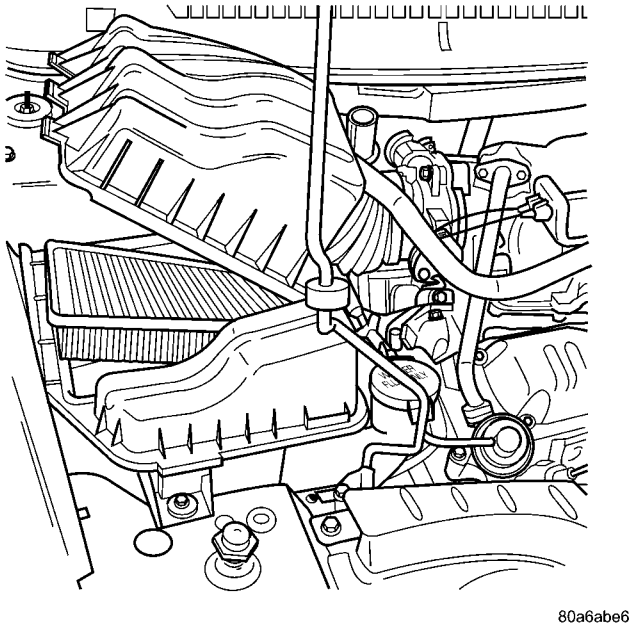

Fig. 11 Air Box Cover

INSTALLATION

(1) Install the air filter element into air box (Fig. 11).

(2) Move cover so that the tabs insert into the air box.

(3) Push cover down and snap the 2 clips.

AIR CLEANER HOUSING

REMOVAL

(1) Disconnect the negative battery cable.
(2) Disconnect the inlet air temperature sensor (Fig. 12).

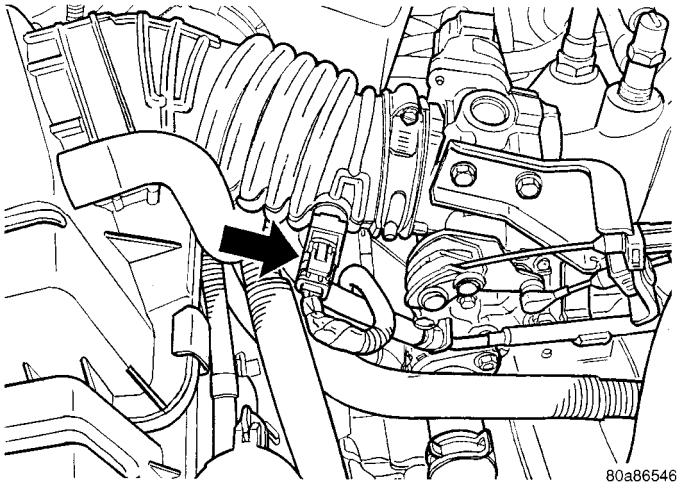

Fig. 12 IAT Sensor 2.4L

(3) Remove the inlet hose to throttle body (Fig. 11).
(4) Remove the bolt for air box at upper radiator cross member.
(5) Pull air box up and off over the single locating pin.
(6) Remove air box from vehicle

INSTALLATION

(1) Install air box into vehicle and onto the locating pin.
(2) Install bolt to hold air box to the upper radiator cross member.
(3) Install the inlet hose to the throttle body.
(4) Connect the inlet air temperature sensor (Fig. 12).
(5) Connect the negative battery cable.

CYLINDER HEAD

DESCRIPTION

The cross flow designed, aluminum cylinder head contains dual over-head camshafts with four valves per cylinder (Fig. 13). The valves are arranged in two in-line banks. The intake valves face toward the front of the vehicle. The exhaust valves face the dash panel. The cylinder head incorporates powdered metal valve guides and seats. The cylinder head is sealed to the block using a multi-layer steel head gasket and retaining bolts.

Integral oil galleries provide lubrication passages to the hydraulic lash adjusters, camshafts, and valve mechanisms.

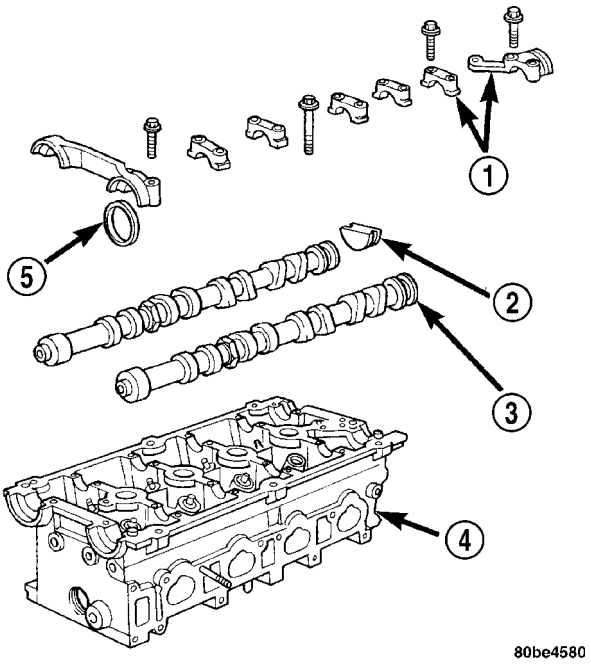

Fig. 13 Cylinder Head and Camshafts

1 - CAMSHAFT BEARING CAPS
2 - PLUG
3 - CAMSHAFT
4 - CYLINDER HEAD
5 - CAMSHAFT OIL SEAL

DIAGNOSIS AND TESTING—CYLINDER HEAD GASKET

A cylinder head gasket leak can be located between adjacent cylinders or between a cylinder and the adjacent water jacket.

Possible indications of the cylinder head gasket leaking between adjacent cylinders are:

- Loss of engine power
- Engine misfiring
- Poor fuel economy

Possible indications of the cylinder head gasket leaking between a cylinder and an adjacent water jacket are:

- Engine overheating
- Loss of coolant
- Excessive steam (white smoke) emitting from exhaust
- Coolant foaming

CYLINDER HEAD (Continued)

CYLINDER-TO-CYLINDER LEAKAGE TEST

To determine if an engine cylinder head gasket is leaking between adjacent cylinders, follow the procedures in Cylinder Compression Pressure Test (Refer to 9 - ENGINE - DIAGNOSIS AND TESTING). An engine cylinder head gasket leaking between adjacent cylinders will result in approximately a 50–70% reduction in compression pressure.

CYLINDER-TO-WATER JACKET LEAKAGE TEST

WARNING: USE EXTREME CAUTION WHEN THE ENGINE IS OPERATING WITH COOLANT PRESSURE CAP REMOVED.

VISUAL TEST METHOD

With the engine cool, remove the coolant pressure cap. Start the engine and allow it to warm up until thermostat opens.

If a large combustion/compression pressure leak exists, bubbles will be visible in the coolant.

COOLING SYSTEM TESTER METHOD

WARNING: WITH COOLING SYSTEM TESTER IN PLACE, PRESSURE WILL BUILD UP FAST. EXCESSIVE PRESSURE BUILT UP, BY CONTINUOUS ENGINE OPERATION, MUST BE RELEASED TO A SAFE PRESSURE POINT. NEVER PERMIT PRESSURE TO EXCEED 138 kPa (20 psi).

Install Cooling System Tester 7700 or equivalent to pressure cap neck. Start the engine and observe the tester's pressure gauge. If gauge pulsates with every power stroke of a cylinder a combustion pressure leak is evident.

CHEMICAL TEST METHOD

Combustion leaks into the cooling system can also be checked by using Bloc-Chek Kit C-3685-A or equivalent. Perform test following the procedures supplied with the tool kit.

REMOVAL - CYLINDER HEAD

(1) Perform fuel system pressure release procedure **before attempting any repairs.** (Refer to 14 - FUEL SYSTEM/FUEL DELIVERY - SPECIFICATIONS)

(2) Disconnect battery negative cable.

(3) Drain cooling system. (Refer to 7 - COOLING - STANDARD PROCEDURE)

(4) Remove air filter housing and inlet tube.

(5) Remove upper intake manifold. (Refer to 9 - ENGINE/MANIFOLDS/INTAKE MANIFOLD - REMOVAL)

(6) Remove heater tube support bracket from cylinder head.

(7) Disconnect radiator upper and heater supply hoses from intake manifold water outlet connections.

(8) Remove accessory drive belts. (Refer to 7 - COOLING/ACCESSORY DRIVE/DRIVE BELTS - REMOVAL)

(9) Raise vehicle and remove exhaust pipe from manifold.

(10) Remove power steering pump reservoir and line support bracket from lower intake manifold and set aside. Do not disconnect lines.

(11) Remove ignition coil and wires from engine.

(12) Disconnect cam sensor and fuel injector wiring connectors.

(13) Remove timing belt and camshaft sprockets. (Refer to 9 - ENGINE/VALVE TIMING/TIMING BELT/CHAIN AND SPROCKETS - REMOVAL)

(14) Remove timing belt idler pulley and rear timing belt cover. (Refer to 9 - ENGINE/VALVE TIMING/TIMING BELT / CHAIN COVER(S) - REMOVAL)

(15) Remove cylinder head cover. (Refer to 9 - ENGINE/CYLINDER HEAD/CYLINDER HEAD COVER(S) - REMOVAL)

(16) Remove camshafts (Refer to 9 - ENGINE/CYLINDER HEAD/CAMSHAFT(S) - REMOVAL).

NOTE: Identify rocker arm position to ensure correct re-installation in original position, if reused.

(17) Remove rocker arms. (Refer to 9 - ENGINE/CYLINDER HEAD/ROCKER ARMS - REMOVAL)

(18) Remove cylinder head bolts in REVERSE sequence of tightening (Fig. 19).

(19) Remove cylinder head from engine block.

(20) Inspect and clean cylinder head. (Refer to 9 - ENGINE/CYLINDER HEAD - INSPECTION) (Refer to 9 - ENGINE/CYLINDER HEAD - CLEANING)

CLEANING

To ensure engine gasket sealing, proper surface preparation must be performed, especially with the use of aluminum engine components and multi-layer steel cylinder head gaskets.

NOTE: Multi-Layer Steel (MLS) head gaskets require a scratch free sealing surface.

Remove all gasket material from cylinder head and block (Refer to 9 - ENGINE - STANDARD PROCEDURE). Be careful not to gouge or scratch the aluminum head sealing surface.

Clean all engine oil passages.

CYLINDER HEAD (Continued)

INSPECTION

(1) Cylinder head must be flat within 0.1 mm (0.004 in.) (Fig. 14).

(2) Inspect camshaft bearing journals for scoring.

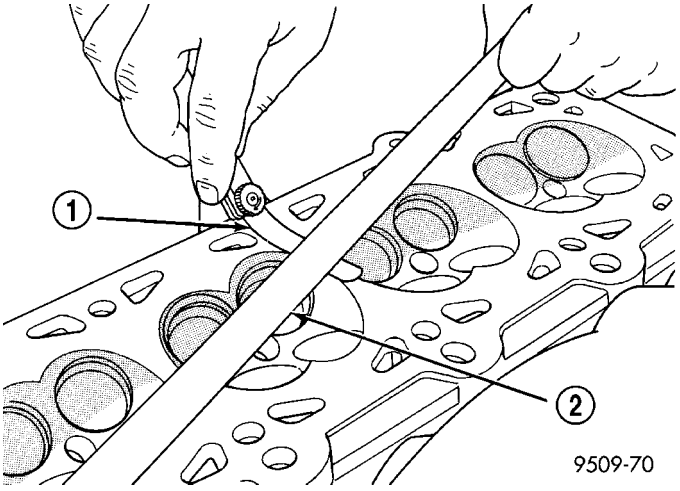

Fig. 14 Checking Cylinder Head Flatness

1 - FEELER GAUGE
2 - STRAIGHT EDGE

(3) Remove carbon and varnish deposits from inside of valve guides with a reliable guide cleaner.

(4) Using a small hole gauge and a micrometer, measure valve guides in 3 places top, middle and bottom (Fig. 15). (Refer to 9 - ENGINE - SPECIFICATIONS) Replace guides if they are not within specification.

(5) Check valve guide height (Fig. 16).

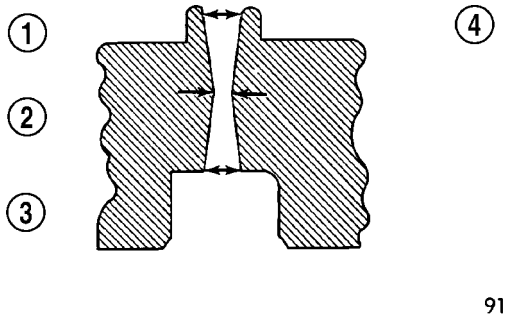

Fig. 15 Checking Wear on Valve Guide—Typical

1 - TOP
2 - MIDDLE
3 - BOTTOM
4 - CUT AWAY VIEW OF VALVE GUIDE MEASUREMENT LOCATIONS

INSTALLATION - CYLINDER HEAD

NOTE: The Cylinder head bolts should be examined BEFORE reuse. If the threads are necked down, the bolts must be replaced (Fig. 17).

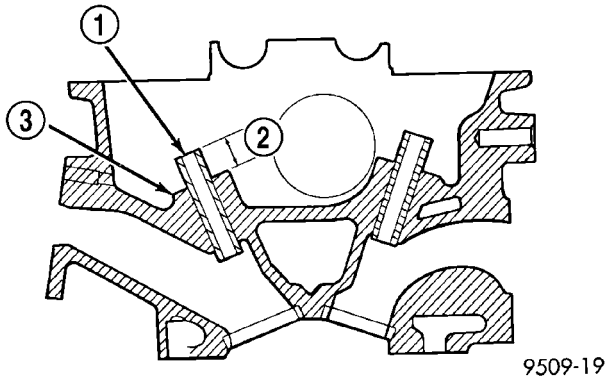

Fig. 16 Valve Guide Height

1 - VALVE GUIDE
2 - 13.25 - 13.75 MM (0.521 - 0.541 IN.)
3 - SPRING SEAT

Necking can be checked by holding a scale or straight edge against the threads. If all the threads do not contact the scale, the bolt should be replaced.

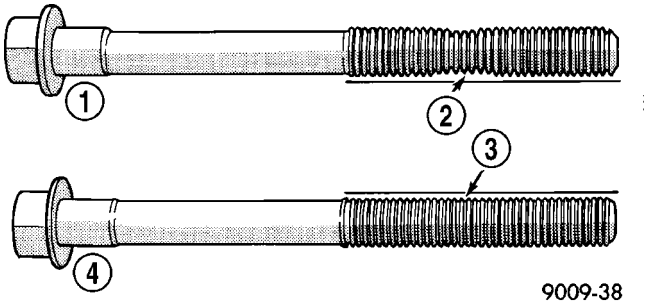

Fig. 17 Checking Bolts for Stretching (Necking)

1 - STRETCHED BOLT
2 - THREADS ARE NOT STRAIGHT ON LINE
3 - THREADS ARE STRAIGHT ON LINE
4 - UNSTRETCHED BOLT

(1) Before installing the bolts, the threads should be coated with engine oil.

(2) Position cylinder head gasket on engine block (Fig. 18).

(3) Install cylinder head on engine block.

(4) Tighten the cylinder head bolts in the sequence shown in (Fig. 19). Using the 4 step torque turn method, tighten according to the following values:

- First All to 34 N·m (25 ft. lbs.)
- Second All to 68 N·m (50 ft. lbs.)
- Third All to 68 N·m (50 ft. lbs.)

CAUTION: Do not use a torque wrench for the following step.

- Fourth Turn an additional 1/4 Turn,

CYLINDER HEAD (Continued)

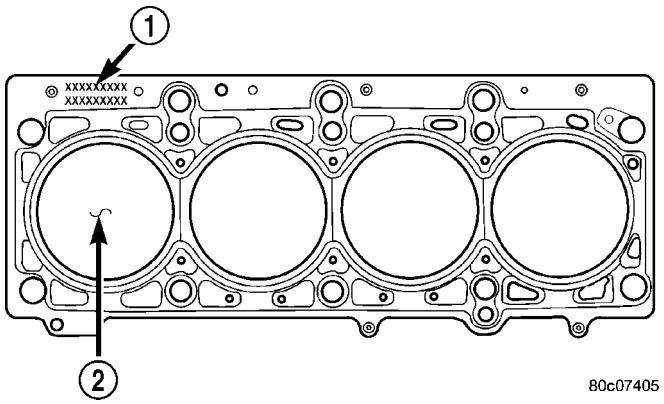

Fig. 18 Cylinder Head Gasket Positioning

1 - PART NUMBER FACES UP
2 - NO. 1 CYLINDER

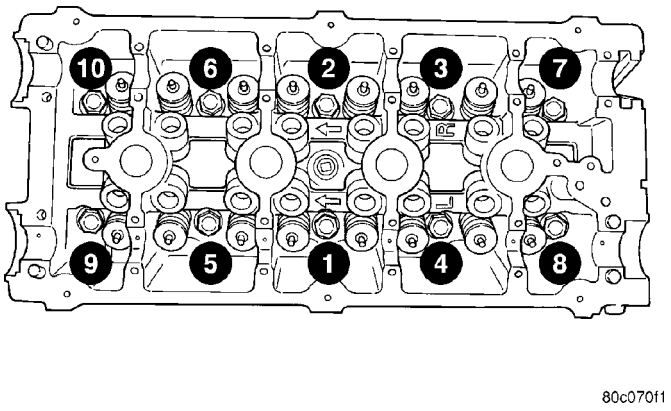

Fig. 19 Cylinder Head Tightening Sequence

(5) Install rocker arms. (Refer to 9 - ENGINE/CYLINDER HEAD/ROCKER ARMS - INSTALLATION)

(6) Install camshafts. (Refer to 9 - ENGINE/CYLINDER HEAD/CAMSHAFT(S) - INSTALLATION).

(7) Install cylinder head cover. (Refer to 9 - ENGINE/CYLINDER HEAD/CYLINDER HEAD COVER(S) - INSTALLATION)

(8) Install timing belt rear cover and timing belt idler pulley. (Refer to 9 - ENGINE/VALVE TIMING/TIMING BELT / CHAIN COVER(S) - INSTALLATION)

(9) Install timing belt and camshaft sprockets. (Refer to 9 - ENGINE/VALVE TIMING/TIMING BELT/CHAIN AND SPROCKETS - INSTALLATION)

(10) Connect cam sensor and fuel injectors wiring connectors.

(11) Install ignition coil and wires. Connect ignition coil wiring connector.

(12) Install power steering pump reservoir and line support bracket to cylinder head.

(13) Raise vehicle and install the exhaust pipe to the manifold.

(14) Install accessory drive belts. (Refer to 7 - COOLING/ACCESSORY DRIVE/DRIVE BELTS - INSTALLATION)

(15) Install heater tube support bracket to cylinder head.

(16) Connect radiator upper and heater hoses to intake manifold water outlet connections.

(17) Install upper intake manifold. (Refer to 9 - ENGINE/MANIFOLDS/INTAKE MANIFOLD - INSTALLATION)

(18) Using new gaskets, install EGR tube and tighten fasteners to 11 N·m (95 in. lbs.).

(19) Install air inlet tube and housing.

(20) Connect all vacuum lines, electrical wiring, ground straps and fuel line.

(21) Fill cooling system. (Refer to 7 - COOLING - STANDARD PROCEDURE)

(22) Connect battery negative cable.

CAMSHAFT OIL SEAL(S)

REMOVAL

(1) Remove timing belt (Refer to 9 - ENGINE/VALVE TIMING/TIMING BELT AND SPROCKETS - REMOVAL).

(2) Hold each camshaft sprocket with Special Tool 6847 while removing center bolt (Fig. 20).

(3) Remove camshaft sprockets.

(4) Remove rear timing belt cover (Refer to 9 - ENGINE/VALVE TIMING/TIMING BELT COVER(S) - REMOVAL).

(5) Remove camshaft seal using Special Tool C-4679A (Fig. 21).

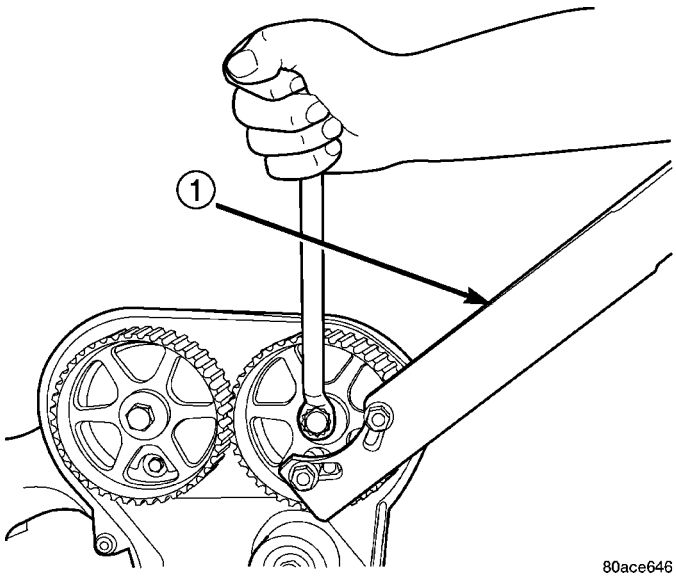

Fig. 20 Camshaft Sprocket - Removal/Installation

1 - SPECIAL TOOL 6847

CAMSHAFT OIL SEAL(S) (Continued)

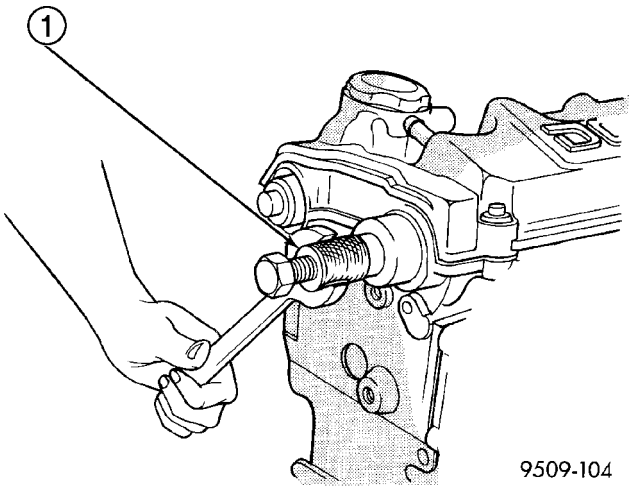

Fig. 21 Camshaft Oil Seal - Removal With C-4679A

1 - SPECIAL TOOL C-4679

CAUTION: Do not nick shaft seal surface or seal bore.

INSTALLATION

(1) Shaft seal surface must be free of varnish, dirt or nicks. Polish with 400 grit paper if necessary.

(2) Install camshaft seals into cylinder head using Special Tool MD-998306 until flush with head (Fig. 22).

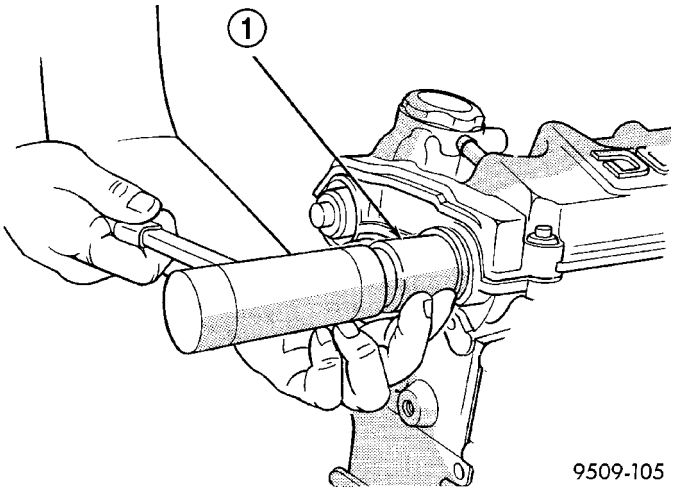

Fig. 22 Camshaft Seal - Installation

1 - SPECIAL TOOL MD-998306

(3) Install timing belt rear cover (Refer to 9 - ENGINE/VALVE TIMING/TIMING BELT COVER(S) - INSTALLATION).

(4) Install camshaft sprockets. Hold each sprocket with Special Tool 6847 and tighten center bolt to 101 N·m (75 ft. lbs.) (Fig. 20).

(5) Install timing belt and front covers (Refer to 9 - ENGINE/VALVE TIMING/TIMING BELT AND SPROCKETS - INSTALLATION) (Refer to 9 - ENGINE/VALVE TIMING/TIMING BELT COVER(S) - INSTALLATION).

CAMSHAFT(S)

DESCRIPTION

Both camshafts have six bearing journal surfaces and two cam lobes per cylinder (Fig. 23). Flanges at the rear journals control camshaft end play. Provision for a cam position sensor is located on the intake camshaft on the rear of the cylinder head. A hydro-dynamic oil seal is used for oil control at the front of the camshaft.

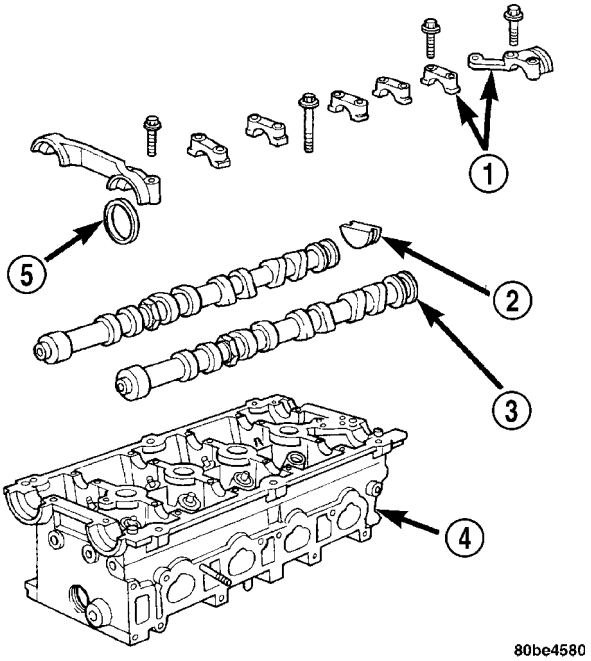

Fig. 23 Camshafts

1 - CAMSHAFT BEARING CAPS
2 - PLUG
3 - CAMSHAFT
4 - CYLINDER HEAD
5 - CAMSHAFT OIL SEAL

OPERATION

The camshaft is driven by the crankshaft via drive sprockets and belt. The camshaft has precisely machined lobes to provide accurate valve timing and duration.

STANDARD PROCEDURE - MEASURING CAMSHAFT END PLAY

(1) Oil camshaft journals and install camshaft **WITHOUT** rocker arms. Install rear cam caps and tighten screws to specified torque.

(2) Using a suitable tool, move camshaft as far rearward as it will go.

CAMSHAFT(S) (Continued)

(3) Zero dial indicator (Fig. 24).
(4) Move camshaft as far forward as it will go.
(5) Record reading on dial indicator. For end play specification, (Refer to 9 - ENGINE - SPECIFICATIONS).
(6) If end play is excessive, check cylinder head and camshaft for wear; replace as necessary.

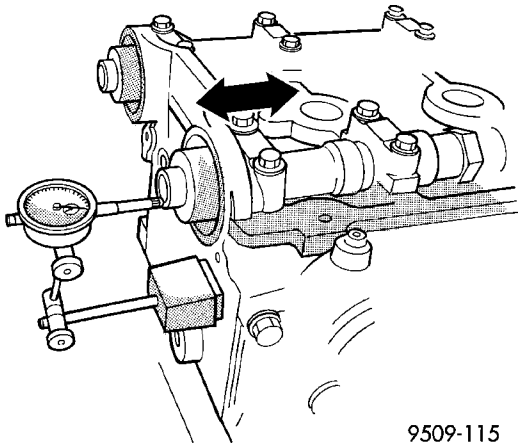

Fig. 24 Camshaft End Play - Typical

REMOVAL

(1) Remove cylinder head cover (Refer to 9 - ENGINE/CYLINDER HEAD/CYLINDER HEAD COVER - REMOVAL).
(2) Remove camshaft position sensor and camshaft target magnet (Refer to 8 - ELECTRICAL/IGNITION CONTROL/CAMSHAFT POSITION SENSOR - REMOVAL).
(3) Remove timing belt (Refer to 9 - ENGINE/VALVE TIMING/TIMING BELT AND SPROCKETS - REMOVAL).
(4) Remove camshaft sprockets and timing belt rear cover (Refer to 9 - ENGINE/VALVE TIMING/TIMING BELT COVER(S) - REMOVAL).
(5) Bearing caps are identified for location. Remove the outside bearing caps first (Fig. 25).
(6) Loosen the camshaft bearing cap attaching fasteners in sequence shown (Fig. 26) one camshaft at a time.

CAUTION: Camshafts are not interchangeable. The intake cam number 6 thrust bearing face spacing is wider.

(7) Identify the camshafts before removing from the head. The camshafts are not interchangeable.
(8) Remove camshafts from cylinder head.

NOTE: If removing rocker arms, identify for reinstallation in the original position.

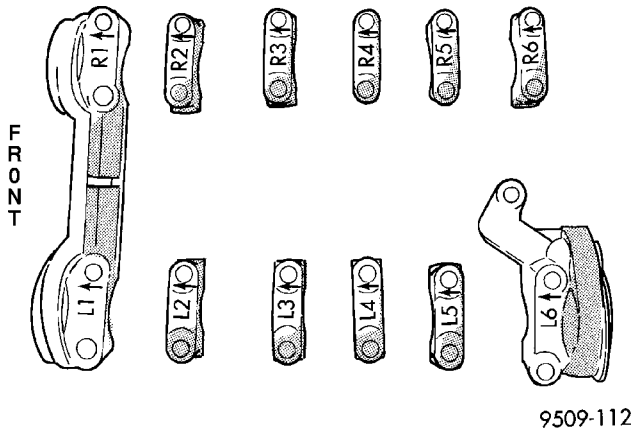

Fig. 25 Camshaft Bearing Cap Identification

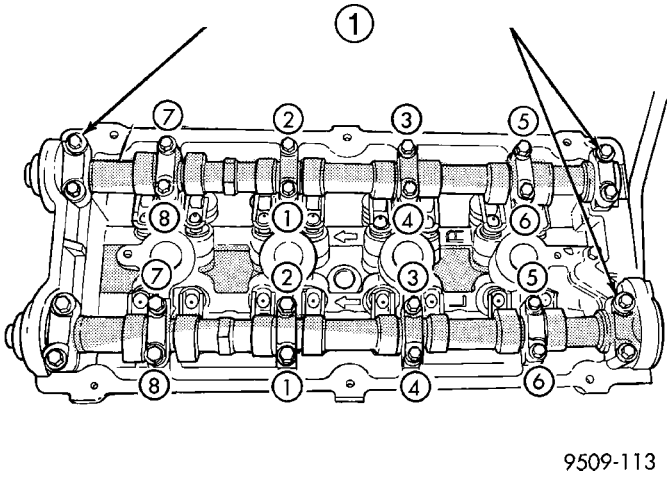

Fig. 26 Camshaft Bearing Cap - Removal

1 - REMOVE OUTSIDE BEARING CAPS FIRST

CLEANING

Clean camshaft with a suitable solvent.

INSPECTION

(1) Inspect camshaft bearing journals for damage and binding (Fig. 27). If journals are binding, check the cylinder head for damage. Also check cylinder head oil holes for clogging.
(2) Check the cam lobe and bearing surfaces for abnormal wear and damage. Replace camshaft if defective.

NOTE: If camshaft is replaced due to lobe wear or damage, always replace the rocker arms.

(3) Measure the lobe actual wear (unworn area - wear zone = actual wear) (Fig. 27) and replace camshaft if out of limit. Standard value is 0.0254 mm (0.001 in.), wear **limit** is 0.254 mm (0.010 in.).

CAMSHAFT(S) (Continued)

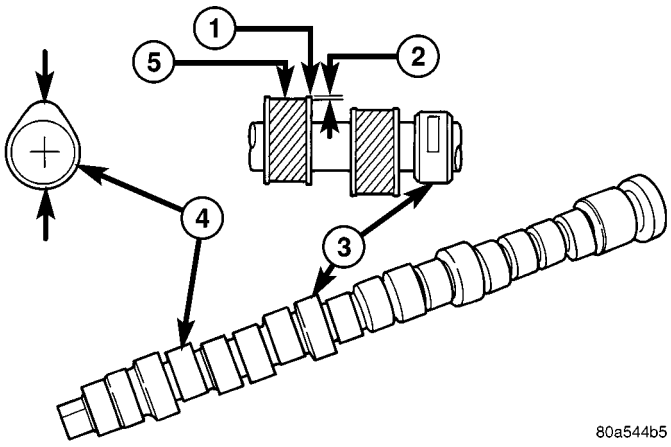

Fig. 27 Checking Camshaft(s) for Wear

1 - UNWORN AREA
2 - ACTUAL WEAR
3 - BEARING JOURNAL
4 - LOBE
5 - WEAR ZONE

INSTALLATION

CAUTION: Ensure that NONE of the pistons are at top dead center when installing the camshafts.

(1) Lubricate all camshaft bearing journals, rocker arms and camshaft lobes.

(2) Install all rocker arms in original positions, if reused.

(3) Position camshafts on cylinder head bearing journals. Install right and left camshaft bearing caps No. 2 – 5 and right No. 6. Tighten M6 fasteners to 12 N·m (105 in. lbs.) in sequence shown in (Fig. 28).

(4) Apply Mopar® Gasket Maker to No. 1 and No. 6 bearing caps (Fig. 29). Install bearing caps and tighten M8 fasteners to 28 N·m (250 in. lbs.).

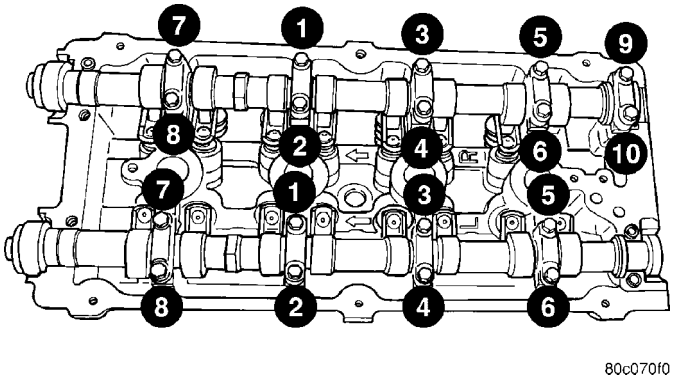

Fig. 28 Camshaft Bearing Cap Tightening Sequence

NOTE: Bearing end caps must be installed before seals can be installed.

(5) Install camshaft oil seals (Refer to 9 - ENGINE/CYLINDER HEAD/CAMSHAFT OIL SEAL(S) - INSTALLATION).

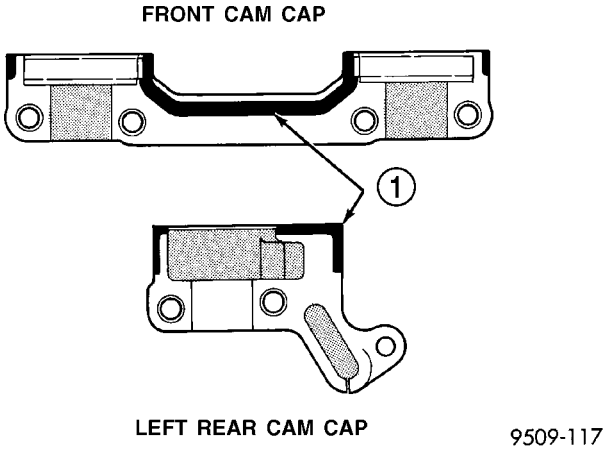

Fig. 29 Camshaft Bearing Cap Sealing

1 - 1.5 mm (.060 in.) DIAMETER BEAD OF MOPAR GASKET MAKER

(6) Install camshaft target magnet and camshaft position sensor.

(7) Install cylinder head cover (Refer to 9 - ENGINE/CYLINDER HEAD/CYLINDER HEAD COVER - INSTALLATION).

(8) Install timing belt rear cover and camshaft sprockets (Refer to 9 - ENGINE/VALVE TIMING/ TIMING BELT COVER(S) - INSTALLATION).

(9) Install timing belt (Refer to 9 - ENGINE/ VALVE TIMING/TIMING BELT AND SPROCKETS - INSTALLATION).

CYLINDER HEAD COVER

REMOVAL

(1) Remove upper intake manifold. (Refer to 9 - ENGINE/MANIFOLDS/INTAKE MANIFOLD - REMOVAL)

(2) Remove upper manifold support bracket.

(3) Remove ignition coil and spark plug wires.

(4) Disconnect PCV and make-up air hoses from cylinder head cover.

(5) Remove cylinder head cover bolts.

(6) Remove cylinder head cover from cylinder head.

CLEANING

Clean cylinder head and cover mating surfaces using a suitable solvent.

INSPECTION

Inspect cover rails for flatness.

CYLINDER HEAD COVER (Continued)

INSTALLATION

NOTE: Replace spark plug well seals and bolt assemblies when installing a new cylinder head cover gasket.

(1) Install new cylinder head cover gaskets and spark plug well seals (Fig. 30).

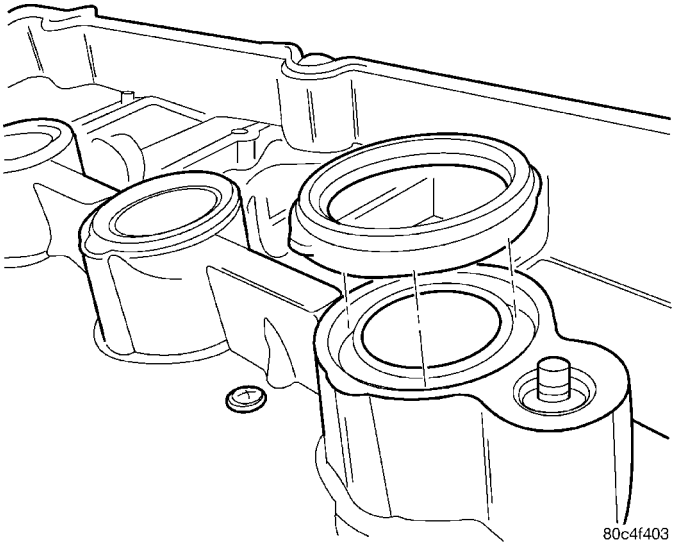

Fig. 30 Spark Plug Well Seals

(2) Replace cylinder head cover bolt assemblies.

CAUTION: Do not allow oil or solvents to contact the timing belt as they can deteriorate the rubber and cause tooth skipping.

(3) Apply Mopar® Engine RTV GEN II at the camshaft cap corners and at the top edges of the 1/2 round seal (Fig. 31).

(4) Install cylinder head cover assembly to cylinder head. Install all bolts, ensuring the single (1) stud used to attach the upper intake manifold support bracket is located in the #8 location as shown in torque sequence diagram (Fig. 32). Tighten bolts in sequence shown in (Fig. 32). Using a 3 step torque method as follows:

(a) Tighten all bolts to 4.5 N·m (40 in. lbs.).
(b) Tighten all bolts to 9.0 N·m (80 in. lbs.).
(c) Tighten all bolts to 12 N·m (105 in. lbs.).

(5) Install ignition coil and spark plug wires. Tighten fasteners to 12 N·m (105 in. lbs.).

(6) If the PCV valve was removed, apply Mopar® Thread Sealant with Teflon to threads and install valve to cylinder head cover. Tighten PCV valve to 8 N·m (70 in. lbs.).

(7) Connect PCV and make-up air hoses to cylinder head cover.

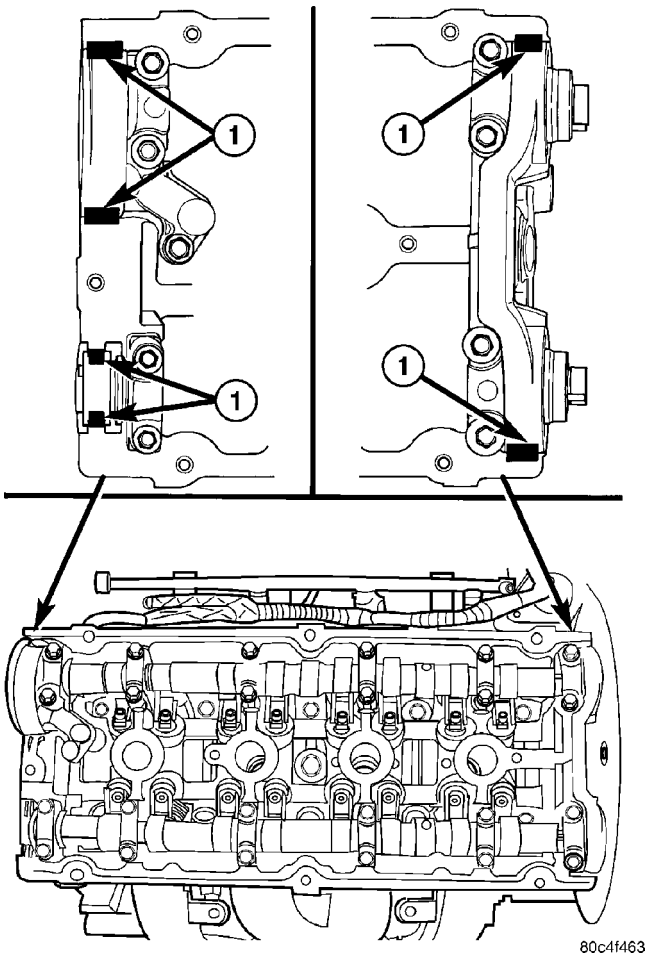

Fig. 31 Sealer Locations

1 – SEALER LOCATION

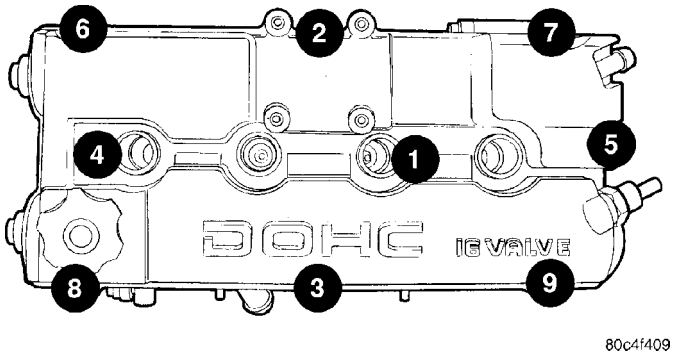

Fig. 32 Cylinder Head Cover Tightening Sequence (Typical Cover Shown)

(8) Install upper intake manifold. (Refer to 9 - ENGINE/MANIFOLDS/INTAKE MANIFOLD - INSTALLATION)

INTAKE/EXHAUST VALVES & SEATS

DESCRIPTION

The valves are made of heat resistant steel. They have chrome plated stems to prevent scuffing. Viton rubber valve stem seals are integral with the spring seats. The valves have three-bead lock keepers to retain springs and to promote valve rotation.

CLEANING

(1) Clean all valves thoroughly and discard burned, warped and cracked valves.

VALVE SPRINGS & SEALS

REMOVAL

REMOVAL - CYLINDER HEAD ON

(1) Remove cylinder head cover (Refer to 9 - ENGINE/CYLINDER HEAD/CYLINDER HEAD COVER(S) - REMOVAL).

(2) Remove camshafts (Refer to 9 - ENGINE/CYLINDER HEAD/CAMSHAFT(S) - REMOVAL).

(3) Rotate crankshaft until piston is at TDC on compression.

(4) With air hose attached to adapter tool installed in spark plug hole, apply 90-120 psi air pressure.

(5) Using Special Tool MD-998772-A with adapter 6779 (Fig. 33), compress valve springs and remove valve locks.

(6) Remove valve spring(s).

(7) Remove valve stem seal(s) by a using valve stem seal tool (Fig. 35).

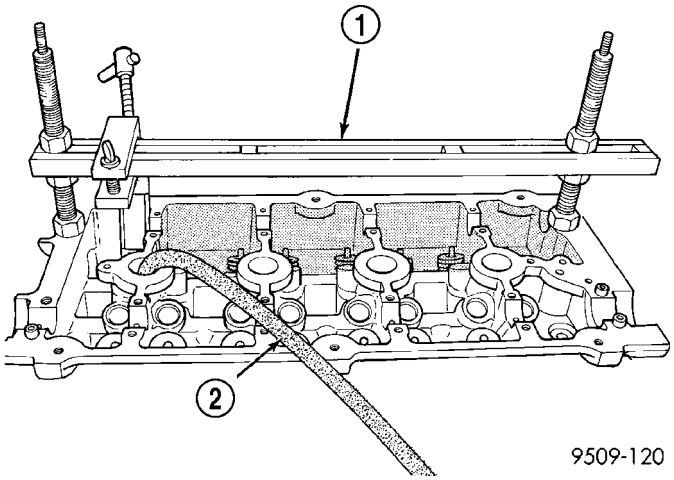

Fig. 33 Valve Spring - Removal/Installation

1 - VALVE SPRING COMPRESSOR MD 998772A
2 - AIR HOSE

REMOVAL - CYLINDER HEAD OFF

(1) With cylinder head removed from cylinder block, compress valve springs using a universal valve spring compressor.

(2) Remove valve retaining locks, valve spring retainers, valve stem seals and valve springs.

(3) Before removing valves, **remove any burrs from valve stem lock grooves to prevent damage to the valve guides.** Identify valves, locks and retainers to insure installation in original location.

(4) Inspect the valves. (Refer to 9 - ENGINE/CYLINDER HEAD/VALVE SPRINGS - INSPECTION)

INSPECTION

(1) Whenever valves have been removed for inspection, reconditioning or replacement, valve springs should be tested for correct tension. Discard the springs that do not meet specifications. The following specifications apply to both intake and exhaust valves springs:

- Valve Closed Nominal Tension—76 lbs. @ 38.0 mm (1.50 in.)
- Valve Open Nominal Tension—136 lbs. @ 29.75 mm (1.17 in.)

(2) Inspect each valve spring for squareness with a steel square and surface plate, test springs from both ends. If the spring is more than 1.5 mm (1/16 inch) out of square, install a new spring.

INSTALLATION

INSTALLATION - CYLINDER HEAD ON

(1) Install valve seal/valve spring seat assembly (Fig. 34). Push the assembly down to seat it onto the valve guide.

(2) Install valve spring and retainer, use Special Tool MD-998772-A with adapter 6779 to compress valve springs only enough to install locks (Fig. 33). Correct alignment of tool is necessary to avoid nicking valve stems.

(3) Remove air hose and install spark plugs.

(4) Install camshafts (Refer to 9 - ENGINE/CYLINDER HEAD/CAMSHAFT(S) - INSTALLATION).

(5) Install cylinder head cover (Refer to 9 - ENGINE/CYLINDER HEAD/CYLINDER HEAD COVER - INSTALLATION).

INSTALLATION - CYLINDER HEAD OFF

(1) Coat valve stems with clean engine oil and insert in cylinder head.

(2) Install new valve stem seals on all valves using a valve stem seal tool (Fig. 35). The valve stem seals should be pushed firmly and squarely over valve guide.

VALVE SPRINGS & SEALS (Continued)

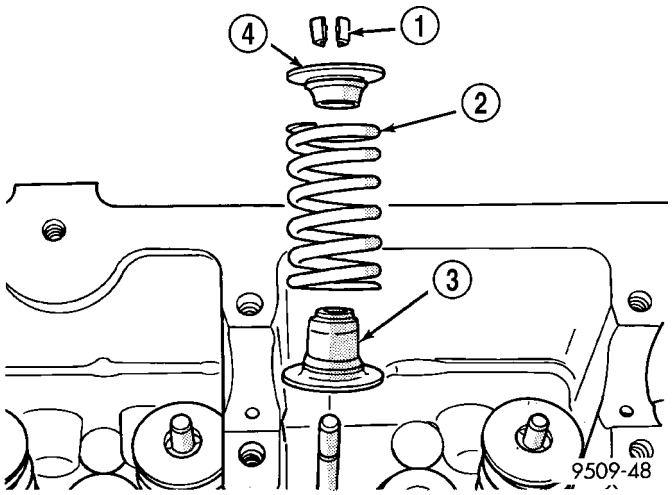

Fig. 34 Valve Stem Seal/Valve Spring Seat

1 - VALVE RETAINING LOCKS
2 - VALVE SPRING
3 - VALVE SEAL AND VALVE SPRING SEAT ASSEMBLY
4 - VALVE SPRING RETAINER

CAUTION: When oversize valves are used, the corresponding oversize valve seal must also be used. Excessive guide wear may result if oversize seals are not used with oversize valves.

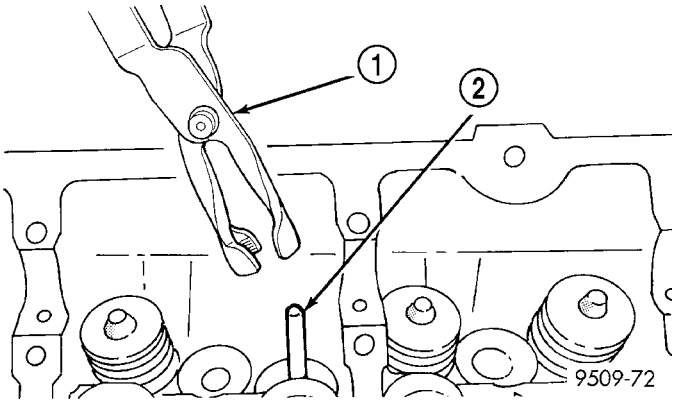

Fig. 35 Valve Stem Oil Seal Tool

1 - VALVE SEAL TOOL
2 - VALVE STEM

(3) Install valve springs and retainers. Compress valve springs only enough to install locks, taking care not to misalign the direction of compression. Nicked valve stems may result from misalignment of the valve spring compressor.

CAUTION: When depressing the valve spring retainers with valve spring compressor the locks can become dislocated. Ensure both locks are in the correct location after removing tool.

(4) Check the valve spring installed height B after refacing the valve and seat (Fig. 36). Make sure measurements are taken from top of spring seat to the bottom surface of spring retainer. If height is greater than 38.75 mm (1.525 in.), install a 0.762 mm (0.030 in.) spacer under the valve spring seat to bring spring height back within specification.

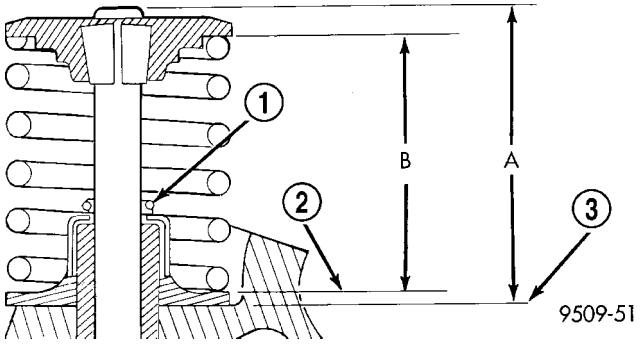

Fig. 36 Checking Spring Installed Height and Valve Tip Height Dimensions

1 - GARTER SPRING
2 - VALVE SPRING SEAT
3 - CYLINDER HEAD SURFACE

HYDRAULIC LASH ADJUSTERS

DIAGNOSIS AND TESTING - HYDRAULIC LASH ADJUSTER NOISE DIAGNOSIS

A tappet-like noise may be produced from several items. Check the following items.

(1) Engine oil level too high or too low. This may cause aerated oil to enter the adjusters and cause them to be spongy.

(2) Insufficient running time after rebuilding cylinder head. Low speed running up to 1 hour may be required.

(3) During this time, turn engine off and let set for a few minutes before restarting. Repeat this several times after engine has reached normal operating temperature.

(4) Low oil pressure.

(5) The oil restrictor (integral to the head gasket) in the vertical oil passage to the cylinder head is plugged with debris.

(6) Air ingested into oil due to broken or cracked oil pump pick up.

(7) Worn valve guides.

(8) Rocker arm ears contacting valve spring retainer.

(9) Rocker arm loose, adjuster stuck or at maximum extension and still leaves lash in the system.

(10) Faulty lash adjuster.

• Check lash adjusters for sponginess while installed in cylinder head. Depress part of rocker arm over adjuster. Normal adjusters should feel very firm. Spongy adjusters can be bottomed out easily.

HYDRAULIC LASH ADJUSTERS (Continued)

- Remove suspected lash adjusters, and replace as necessary.

REMOVAL

NOTE: This procedure is for in-vehicle service with camshafts installed.

(1) Remove cylinder head cover. (Refer to 9 - ENGINE/CYLINDER HEAD/CYLINDER HEAD COVER(S) - REMOVAL)
(2) Remove rocker arm. (Refer to 9 - ENGINE/CYLINDER HEAD/ROCKER ARMS - REMOVAL)
(3) Remove hydraulic lash adjuster (Fig. 37).
(4) Repeat removal procedure for each hydraulic lash adjuster.
(5) If reusing, mark each hydraulic lash adjuster for reassembly in original position. Lash adjusters are serviced as an assembly.

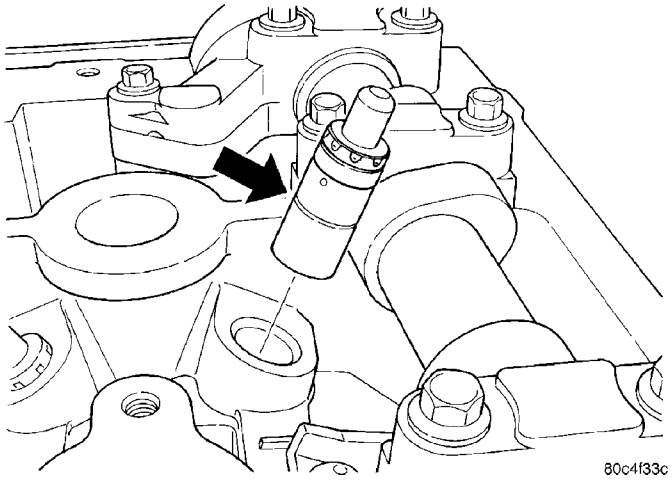

Fig. 37 Hydraulic Lash Adjuster

INSTALLATION

(1) Install hydraulic lash adjuster (Fig. 37). Ensure the lash adjusters are at least partially full of engine oil. This is indicated by little or no plunger travel when the lifter is depressed.
(2) Install rocker arm. (Refer to 9 - ENGINE/CYLINDER HEAD/ROCKER ARMS - INSTALLATION)
(3) Repeat installation procedure for each hydraulic lash adjuster.
(4) Install cylinder head cover. (Refer to 9 - ENGINE/CYLINDER HEAD/CYLINDER HEAD COVER(S) - INSTALLATION)

ROCKER ARMS

REMOVAL

NOTE: This procedure is for in-vehicle service with camshafts installed.

(1) Remove cylinder head cover. (Refer to 9 - ENGINE/CYLINDER HEAD/CYLINDER HEAD COVER(S) - REMOVAL)
(2) Remove spark plugs.
(3) Rotate engine until the camshaft lobe, on the follower being removed, is positioned on its base circle (heel). Also, the piston should be a minimum of 6.3 mm (0.25 in) below TDC position.

CAUTION: If cam follower assemblies are to be reused, always mark position for reassembly in their original positions.

(4) Using Special Tools 8215A and 8436 slowly depress valve assembly until rocker arm can be removed (Fig. 38).
(5) Repeat removal procedure for each rocker arm.

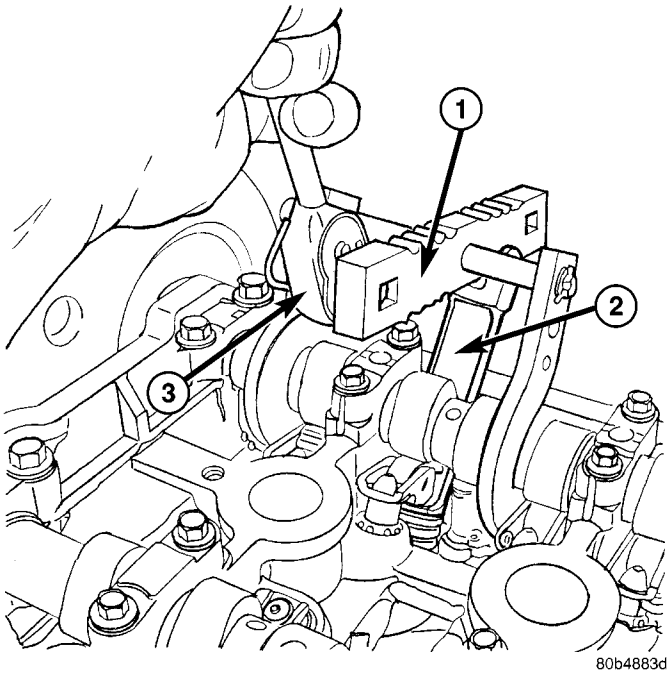

Fig. 38 Rocker Arm - Removal/Installation

1 - SPECIAL TOOL 8215A
2 - SPECIAL TOOL 8436
3 - 3/8″ DRIVE RACHET

INSPECTION

Inspect the rocker arm for wear or damage (Fig. 39). Replace as necessary.

INSTALLATION

(1) Lubricate rocker arm with clean engine oil.
(2) Using Special Tools 8215A and 8436 slowly depress valve assembly until rocker arm can be installed on the hydraulic lifter and valve stem (Fig. 38).
(3) Repeat installation procedure for each rocker arm.

ROCKER ARMS (Continued)

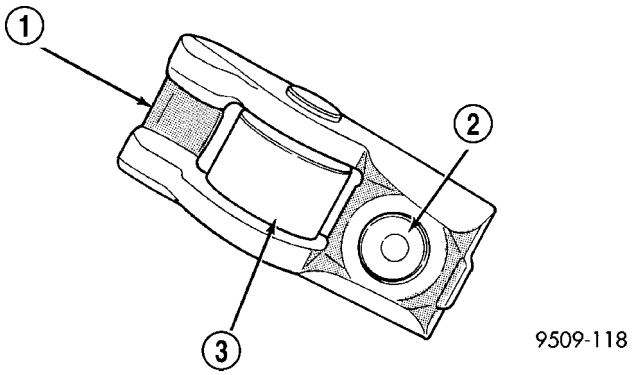

Fig. 39 Rocker Arm

1 - TIP
2 - LASH ADJUSTER POCKET
3 - ROLLER

(4) Install spark plugs.

(5) Install cylinder head cover. (Refer to 9 - ENGINE/CYLINDER HEAD/CYLINDER HEAD COVER(S) - INSTALLATION)

ENGINE BLOCK

DESCRIPTION

The cast iron cylinder block is a two-piece assembly, consisting of the cylinder block and bed plate (Fig. 40). The bed plate incorporates the main bearing caps and bolts to the cylinder block. This design offers a much stronger lower end and increased cylinder block rigidity. The rear oil seal retainer is integral with the block. The bed plate and block are serviced as an assembly.

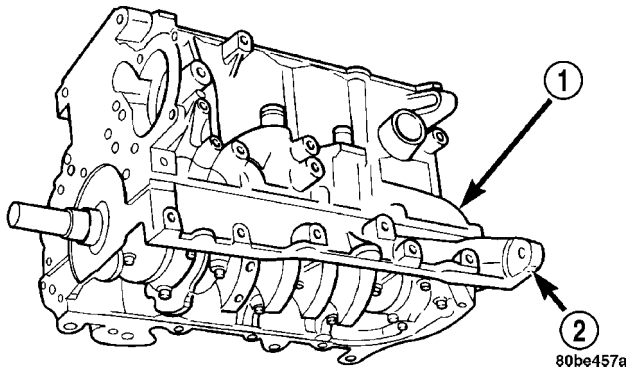

Fig. 40 Cylinder Block and Bed plate

1 - CYLINDER BLOCK
2 - BED PLATE

STANDARD PROCEDURE - CYLINDER BORE HONING

(1) Used carefully, the cylinder bore resizing hone, recommended tool C-823 or equivalent, equipped with 220 grit stones, is the best tool for this honing procedure. In addition to deglazing, it will reduce taper and out-of-round as well as removing light scuffing, scoring or scratches. Usually a few strokes will clean up a bore and maintain the required limits.

(2) Deglazing of the cylinder walls may be done using a cylinder surfacing hone, recommended tool C-3501 or equivalent, equipped with 280 grit stones, if the cylinder bore is straight and round. 20–60 strokes depending on the bore condition, will be sufficient to provide a satisfactory surface. Use a light honing oil. **Do not use engine or transmission oil, mineral spirits or kerosene.** Inspect cylinder walls after each 20 strokes.

(3) Honing should be done by moving the hone up and down fast enough to get a cross-hatch pattern. When hone marks **intersect** at 40-60 degrees, the cross hatch angle is most satisfactory for proper seating of rings (Fig. 41).

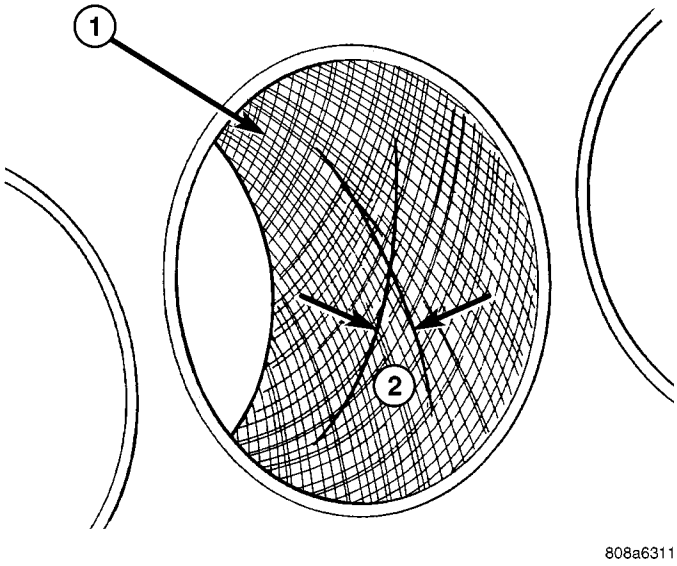

Fig. 41 Cylinder Bore Cross-Hatch Pattern

1 - CROSS-HATCH PATTERN
2 - 40°–60°

(4) A controlled hone motor speed between 200–300 RPM is necessary to obtain the proper cross-hatch angle. The number of up and down strokes per minute can be regulated to get the desired 40–60 degree angle. Faster up and down strokes increase the cross-hatch angle.

(5) After honing, it is necessary that the block be cleaned again to remove all traces of abrasive.

ENGINE BLOCK (Continued)

CAUTION: Ensure all abrasives are removed from engine parts after honing. It is recommended that a solution of soap and hot water be used with a brush and the parts then thoroughly dried. The bore can be considered clean when it can be wiped clean with a white cloth and cloth remains clean. Oil the bores after cleaning to prevent rusting.

CLEANING

Clean cylinder block thoroughly using a suitable cleaning solvent.

INSPECTION

ENGINE BLOCK

(1) Clean cylinder block thoroughly and check all core hole plugs for evidence of leaking.

(2) If new core plugs are to be installed, (Refer to 9 - ENGINE - STANDARD PROCEDURE - ENGINE CORE AND OIL GALLERY PLUGS).

(3) Examine block and cylinder bores for cracks or fractures.

(4) Check block deck surfaces for flatness. Deck surface must be within service limit of 0.1 mm (0.004 in.).

CYLINDER BORE

NOTE: The cylinder bores should be measured at normal room temperature, 21°C (70°F).

The cylinder walls should be checked for out-of-round and taper with Tool C119 or equivalent (Fig. 42) (Refer to 9 - ENGINE - SPECIFICATIONS). If the cylinder walls are badly scuffed or scored, the cylinder block should be replaced, and new pistons and rings fitted.

Measure the cylinder bore at three levels in directions A and B (Fig. 42). Top measurement should be 10 mm (3/8 in.) down and bottom measurement should be 10 mm (3/8 in.) up from bottom of bore. (Refer to 9 - ENGINE - SPECIFICATIONS).

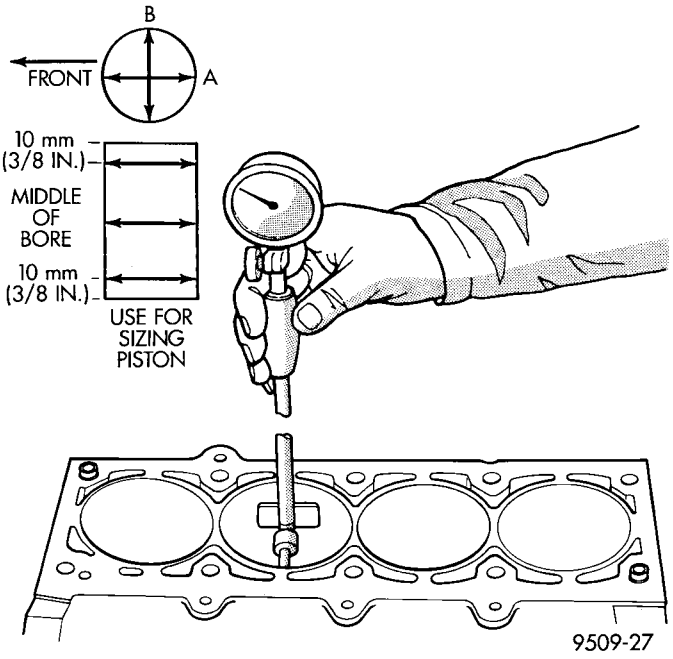

Fig. 42 Checking Cylinder Bore Size

(4) Move crankshaft all the way to the front and read the dial indicator. Refer to Engine Specifications.

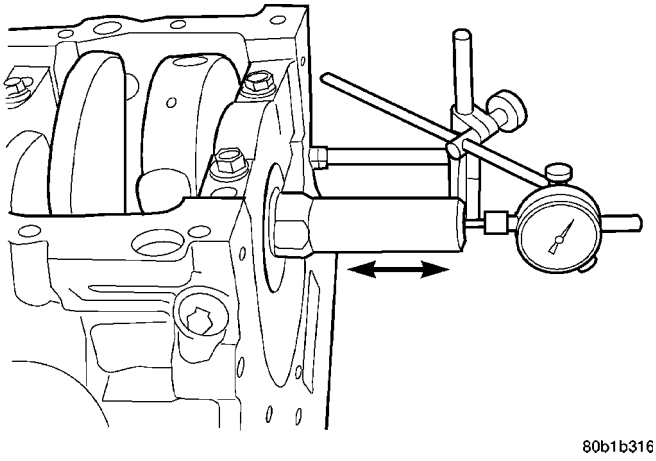

Fig. 43 Checking Crankshaft End Play - Typical

CRANKSHAFT

STANDARD PROCEDURE - CRANKSHAFT END PLAY

(1) Using Dial Indicator C-3339 and Mounting Post L-4438, attach to front of engine, locating probe perpendicular on nose of crankshaft (Fig. 43).

(2) Move crankshaft all the way to the rear of its travel.

(3) Zero the dial indicator.

REMOVAL - CRANKSHAFT

NOTE: Crankshaft can not be removed when engine is in vehicle.

(1) Remove engine assembly from vehicle (Refer to 9 - ENGINE - REMOVAL).

(2) Separate transaxle from engine.

(3) Remove drive plate/flex plate.

(4) Remove crankshaft rear oil seal (Refer to 9 - ENGINE/ENGINE BLOCK/CRANKSHAFT OIL SEAL - REAR - REMOVAL).

(5) Mount engine on a suitable repair stand.

CRANKSHAFT (Continued)

(6) Drain engine oil and remove oil filter.
(7) Remove crankshaft vibration damper (Refer to 9 - ENGINE/ENGINE BLOCK/VIBRATION DAMPER - REMOVAL).
(8) Remove engine mount support bracket.
(9) Remove front timing belt covers (Refer to 9 - ENGINE/VALVE TIMING/TIMING BELT COVER(S) - REMOVAL).
(10) Remove the timing belt (Refer to 9 - ENGINE/VALVE TIMING/TIMING BELT AND SPROCKETS - REMOVAL).
(11) Remove the rear timing belt cover (Refer to 9 - ENGINE/VALVE TIMING/TIMING BELT COVER(S) - REMOVAL).
(12) Remove the oil pan (Refer to 9 - ENGINE/LUBRICATION/OIL PAN - REMOVAL).
(13) Remove oil pump pick-up tube.
(14) Remove the crankshaft sprocket and oil pump (Refer to 9 - ENGINE/LUBRICATION/OIL PUMP - REMOVAL).
(15) Remove balance shafts and housing assembly (Refer to 9 - ENGINE/VALVE TIMING/BALANCE SHAFT - REMOVAL).
(16) Remove crankshaft position sensor.

NOTE: If piston/connecting rod replacement is necessary, remove cylinder head (Refer to 9 - ENGINE/CYLINDER HEAD - REMOVAL).

(17) Using a permanent ink or paint marker, identify cylinder number on each connecting rod cap (Fig. 44).

CAUTION: DO NOT use a number stamp or a punch to mark connecting rods. Damage to connecting rod could occur.

(18) Remove all connecting rod bolts and caps. Care should be taken not to damage the fracture rod and cap surfaces.

NOTE: Do not reuse connecting rod bolts.

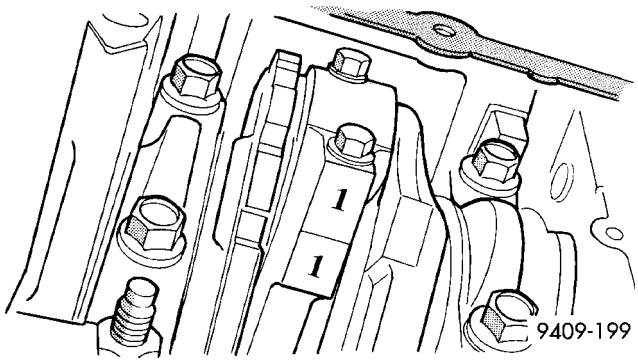

Fig. 44 Identify Connecting Rod to Cylinder-Typical

(19) Remove all bed plate bolts from the engine block (Fig. 45).
(20) Using a mallet gently tap the bed plate loose from the engine block dowel pins.

CAUTION: Do not pry up on one side of the bed plate. Damage may occur to cylinder block to bed plate alignment and thrust bearing.

(21) Bed plate should be removed evenly from the cylinder block dowel pins to prevent damage to the dowel pins and thrust bearing.

CAUTION: Use extreme care when handling crankshaft. Tone wheel damage can occur if crankshaft is mis-handled.

(22) Lift out crankshaft from cylinder block. Do not damage the main bearings or journals when removing the crankshaft.

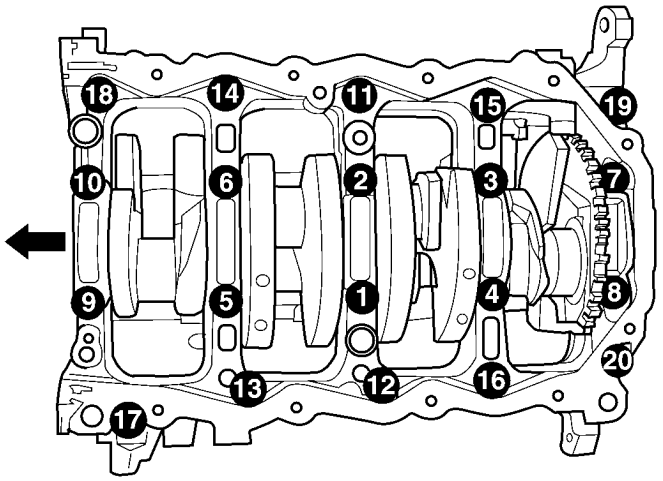

Fig. 45 Bed Plate Bolt Removal Sequence

(23) Remove the target ring mounting screws and discard.
(24) Remove the target ring from the crankshaft.

INSPECTION

For crankshaft specifications (Refer to 9 - ENGINE - SPECIFICATIONS).

The crankshaft journals should be checked for excessive wear, taper and scoring (Fig. 46). Limits of taper or out of round on any crankshaft journals should be held to 0.025 mm (0.001 in.). Journal grinding should not exceed 0.305 mm (0.012 in.) under the standard journal diameter. DO NOT grind

CRANKSHAFT (Continued)

thrust faces of No. 3 main bearing. DO NOT nick crank pin or bearing fillets. After grinding, remove rough edges from crankshaft oil holes and clean out all passages.

CAUTION: With the nodular cast iron crankshafts, it is important that the final paper or cloth polish be in the same direction as normal rotation in the engine.

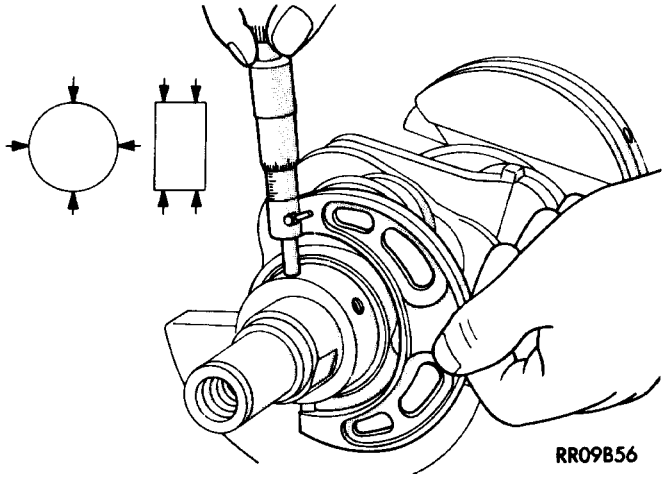

Fig. 46 Crankshaft Journal Measurements - Typical

INSTALLATION - CRANKSHAFT

CRANKSHAFT MAIN BEARING LOCATION

The crankshaft is supported in five main bearings. All upper bearing shells in the crankcase have oil grooves and holes. All lower bearing shells **except** for the thrust bearing half have oil grooves and holes (Fig. 47). Crankshaft end play is controlled by a flanged bearing on the number three main bearing journal.

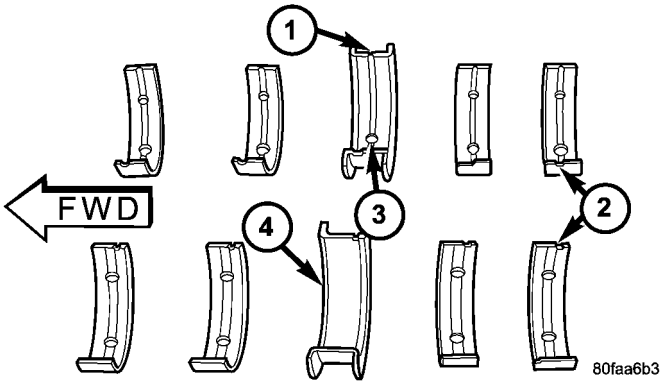

Fig. 47 Main Bearing Identification

1 - OIL GROOVE
2 - MAIN BEARINGS
3 - OIL HOLE
4 - LOWER THRUST BEARING PLAIN (NO OIL HOLE OR GROOVE)

(1) Install the main bearing upper shells with the lubrication groove and oil hole in the engine block (Fig. 48).

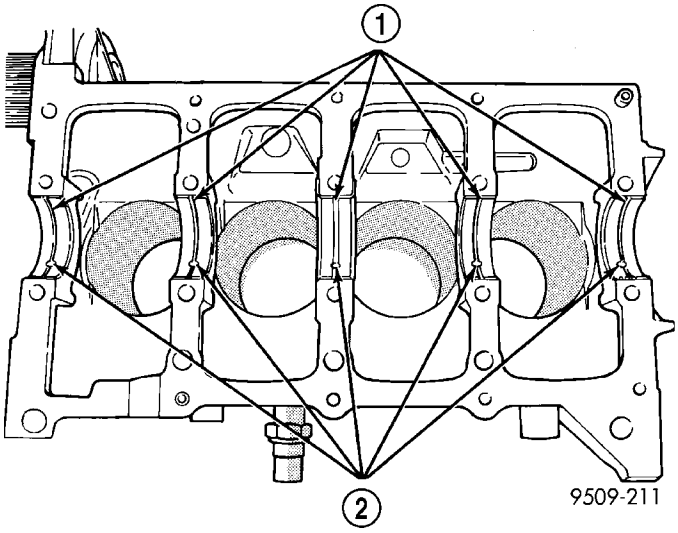

Fig. 48 Installing Main Bearing Upper Shell

1 - LUBRICATION GROOVES
2 - OIL HOLES

(2) Make certain oil holes in block line up with oil hole in bearings and bearing tabs seat in the block tab slots.

NOTE: If the crankshaft is sent out for machine work, it must be balenced as an assembly with the target ring installed.

(3) Clean crankshaft and target ring with MOPAR® brake parts cleaner and dry with compressed air to ensure that the crankshaft mating surface and target ring mounting holes are free from oil and lock patch debris.

NOTE: Always use NEW mounting screws whether installing original or new target ring.

(4) Install **NEW** mounting screws finger tight starting with the #1 location. (Fig. 49) Make sure engagment occurs with the shoulder of the screw and mounting hole before starting all other screws.

(5) Torque all mounting screws with T30 torx bit to 13 Nm (110 in-lbs) following the torque sequence.

CAUTION: Use extreme care when handling crankshaft. Tone wheel damage can occur if crankshaft is mis-handled.

CAUTION: Do not get oil on the bed plate mating surface. It will affect the ability of the sealer to seal the bed plate to cylinder block.

CRANKSHAFT (Continued)

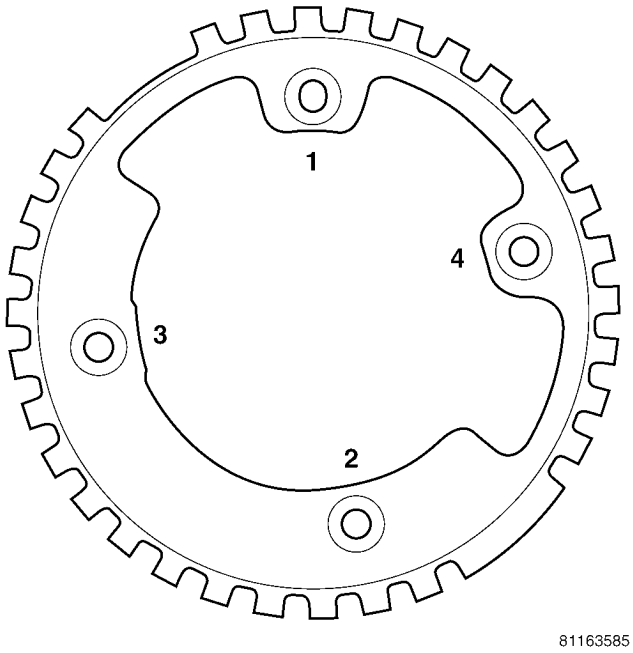

Fig. 49 Target Ring Torque Sequence

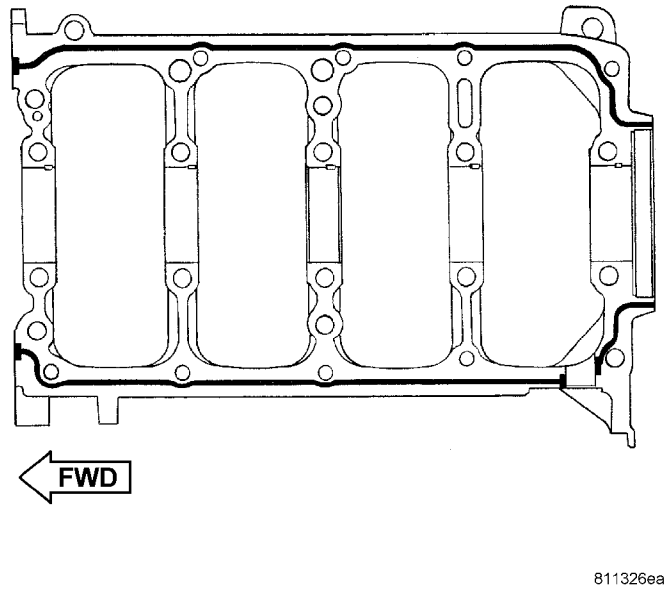

Fig. 50 Bed Plate Sealing

(6) Oil the bearings and journals. Install crankshaft in the engine block.

CAUTION: Use only Mopar® Bed Plate Sealant on the bed plate or damage may occur to the engine.

(7) Install lower main bearings into main bearing cap/bed plate. Make certain the bearing tabs are seated into the bed plate slots and apply oil.

(8) Apply 1.5 to 2.0 mm (0.059 to 0.078 in.) bead of Mopar® Bed Plate Sealant to bed plate as shown in (Fig. 50).

(9) Install the main bearing/bed plate into engine block.

(10) Before installing the bolts the threads should be oiled with clean engine oil, wipe off any excess oil.

(11) Install main bearing bed plate to engine block bolts 11, 17, and 20 finger tight. Tighten these bolts down together until the bed plate contacts the cylinder block.

(12) To ensure correct thrust bearing alignment, perform the following steps:

- Step 1: Rotate crankshaft until number 4 piston is at TDC.
- Step 2: Move crankshaft rearward to limits of travel.
- Step 3: Then, move crankshaft forward to limits of travel.
- Step 4: Wedge an appropriate tool between the rear of the cylinder block **(NOT BED PLATE)** and the rear crankshaft counterweight. This will hold the crankshaft in it's furthest forward position.

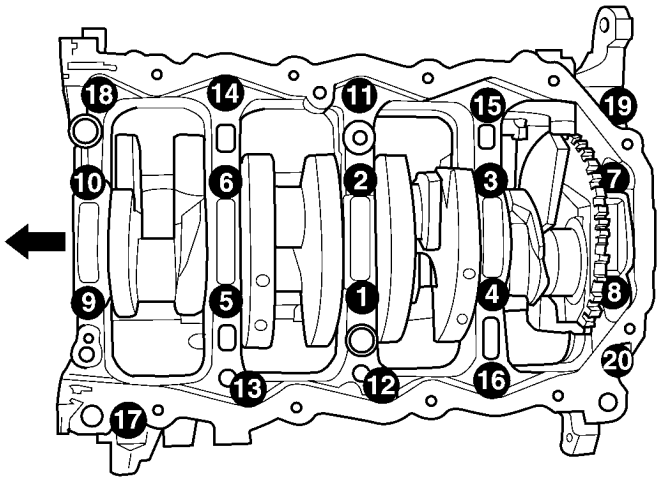

Fig. 51 Main Bearing Caps/Bed Plate Bolt Torque Sequence

- Step 5: Install and tighten bolts (1–10) in sequence shown in (Fig. 51) to 41 N·m (30 ft. lbs.).
- Step 6: Remove wedge tool used to hold crankshaft.

(13) Tighten bolts (1–10) again to 41 N·m (30 ft. lbs.) in sequence shown in (Fig. 51).

CAUTION: Do Not use a torque wrench for the following step.

CRANKSHAFT (Continued)

(14) Turn bolts (1–10) an additional 1/4 turn in sequence shown in (Fig. 51).

(15) Install main bearing bed plate to engine block bolts (11–20), and torque each bolt to 28 N·m (250 in. lbs.) in sequence shown in. (Fig. 51)

(16) Tighten bolts (11–20) again to 28 N·m (250 in. lbs.) in sequence shown in (Fig. 51).

(17) After the main bearing bed plate is installed, check the crankshaft turning torque. The turning torque should not exceed 5.6 N·m (50 in. lbs.).

(18) Check crankshaft end play (Refer to 9 - ENGINE/ENGINE BLOCK/CRANKSHAFT - STANDARD PROCEDURE).

(19) Install connecting rod bearings and caps. **Do Not Reuse Connecting Rod Bolts.** Torque connecting rod bolts to 27 N·m (20 ft. lbs.) plus 1/4 turn.

(20) Install balance shafts and housing assembly (Refer to 9 - ENGINE/VALVE TIMING/BALANCE SHAFT - INSTALLATION).

(21) Install the oil pump (Refer to 9 - ENGINE/LUBRICATION/OIL PUMP - INSTALLATION).

(22) Install oil pump pick-up tube. Torque fastener to 28 N·m (20 ft.. lbs.).

(23) Install the oil pan (Refer to 9 - ENGINE/LUBRICATION/OIL PAN - INSTALLATION).

(24) Install crankshaft position sensor.

(25) Install cylinder head if it was removed (Refer to 9 - ENGINE/CYLINDER HEAD - INSTALLATION).

(26) Install the timing belt rear cover (Refer to 9 - ENGINE/VALVE TIMING/TIMING BELT COVER(S) - INSTALLATION).

(27) Install crankshaft sprocket (Refer to 9 - ENGINE/VALVE TIMING/TIMING BELT AND SPROCKETS - INSTALLATION).

(28) Install the timing belt (Refer to 9 - ENGINE/VALVE TIMING/TIMING BELT AND SPROCKETS - INSTALLATION).

(29) Install the timing belt front covers (Refer to 9 - ENGINE/VALVE TIMING/TIMING BELT COVER(S) - INSTALLATION).

(30) Install engine mount support bracket.

(31) Install **NEW** oil filter.

(32) Install crankshaft rear oil seal (Refer to 9 - ENGINE/ENGINE BLOCK/CRANKSHAFT OIL SEAL - REAR - INSTALLATION).

(33) Install flex plate. Apply Mopar® Lock & Seal Adhesive to bolt threads and tighten to 95 N·m (70 ft. lbs.).

(34) Attach transaxle to engine. Tighten attaching bolts to 101 N·m (75 ft. lbs.).

(35) Install the engine assembly (Refer to 9 - ENGINE - INSTALLATION).

CRANKSHAFT OIL SEAL - FRONT

REMOVAL

(1) Remove the crankshaft vibration damper. (Refer to 9 - ENGINE/ENGINE BLOCK/VIBRATION DAMPER - REMOVAL)

(2) Remove timing belt. (Refer to 9 - ENGINE/VALVE TIMING/TIMING BELT/CHAIN AND SPROCKETS - REMOVAL)

(3) Remove crankshaft sprocket using Special Tool 6793 and insert C-4685-C2 (Fig. 52).

CAUTION: Do not nick shaft seal surface or seal bore.

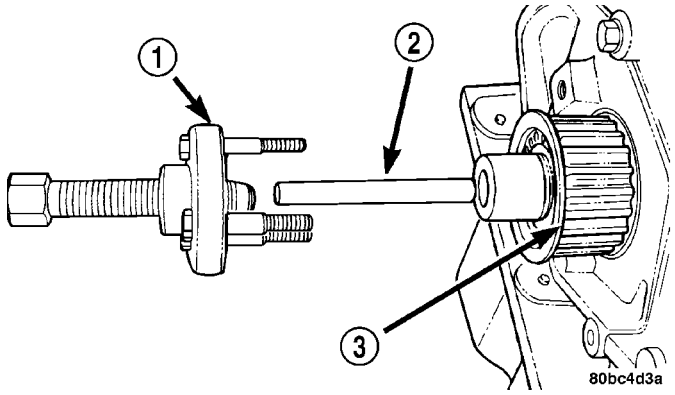

Fig. 52 Crankshaft Sprocket - Removal

1 - SPECIAL TOOL 6793
2 - SPECIAL TOOL C-4685–C2
3 - CRANKSHAFT SPROCKET

(4) Using Tool 6771 to remove front crankshaft oil seal (Fig. 53). Be careful not to damage the seal surface of cover.

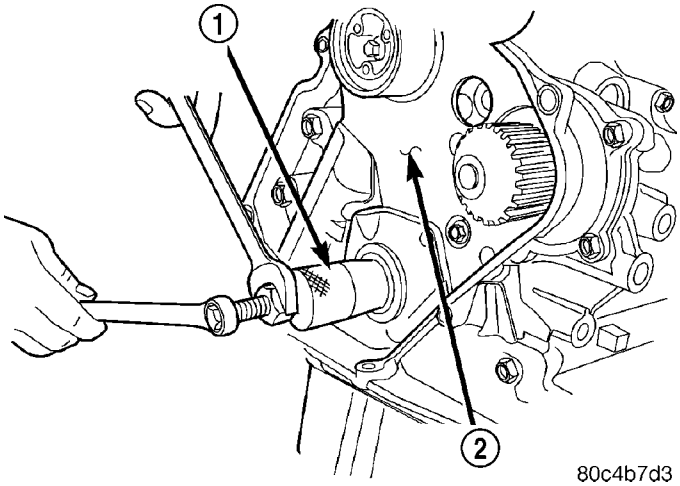

Fig. 53 Front Crankshaft Oil Seal - Removal

1 - SPECIAL TOOL 6771
2 - REAR TIMING BELT COVER

CRANKSHAFT OIL SEAL - FRONT (Continued)

INSTALLATION

(1) Install new seal by using Special Tool 6780 (Fig. 54).

(2) Place seal into opening with seal spring towards the inside of engine. Install seal until flush with cover.

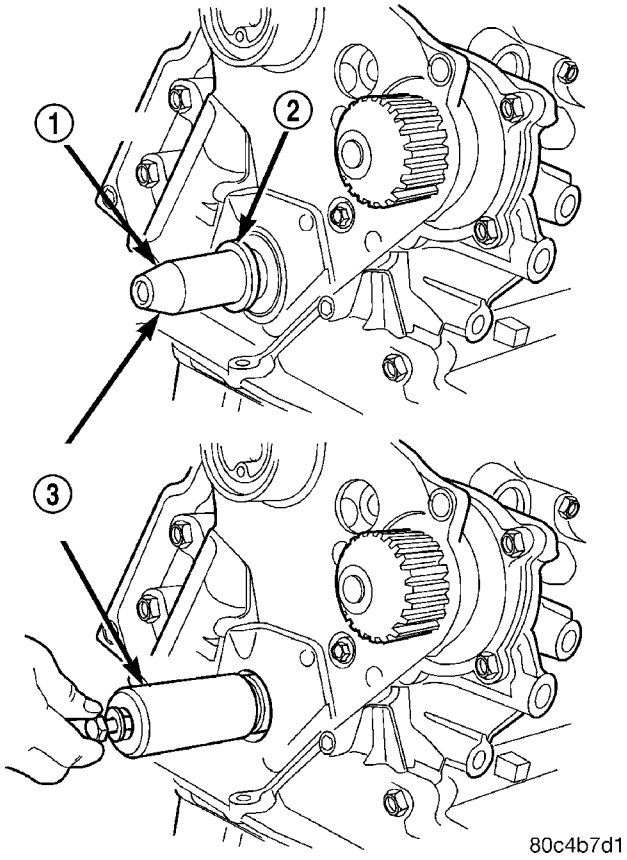

Fig. 54 Crankshaft Front Oil Seal - Installation

1 - PROTECTOR
2 - SEAL
3 - SPECIAL TOOL 6780

(3) Install crankshaft sprocket using Special Tool 6792 (Fig. 55).

(4) Install timing belt. (Refer to 9 - ENGINE/ VALVE TIMING/TIMING BELT/CHAIN AND SPROCKETS - INSTALLATION)

(5) Install crankshaft vibration damper. (Refer to 9 - ENGINE/ENGINE BLOCK/VIBRATION DAMPER - INSTALLATION)

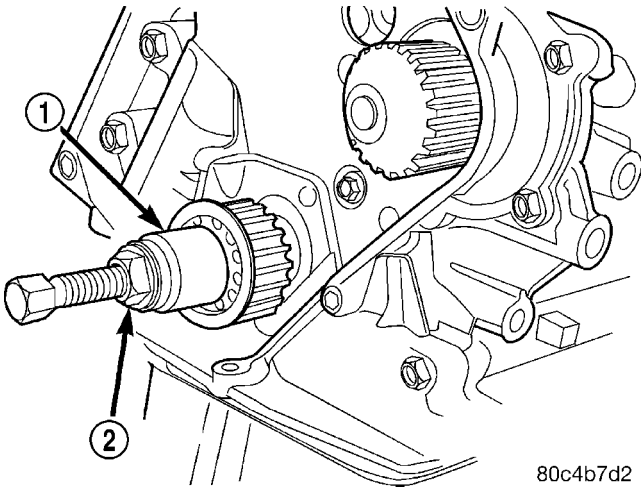

Fig. 55 Crankshaft Sprocket - Installation

1 - SPECIAL TOOL 6792
2 - TIGHTEN NUT TO INSTALL

CRANKSHAFT OIL SEAL - REAR

REMOVAL

(1) Remove transaxle. Refer to TRANSMISSION/ TRANSAXLE - REMOVAL for procedure.

(2) Remove flex plate.

(3) Insert a 3/16 flat bladed screwdriver between the dust lip and the metal case of the crankshaft seal. Angle the screwdriver (Fig. 56)through the dust lip against metal case of the seal. Pry out seal.

CAUTION: Do not permit the screwdriver blade to contact crankshaft seal surface. Contact of the screwdriver blade against crankshaft edge (chamfer) is permitted.

INSTALLATION

CAUTION: If a burr or scratch is present on the crankshaft edge (chamfer), cleanup with 400 grit sand paper to prevent seal damage during installation of new seal.

CRANKSHAFT OIL SEAL - REAR (Continued)

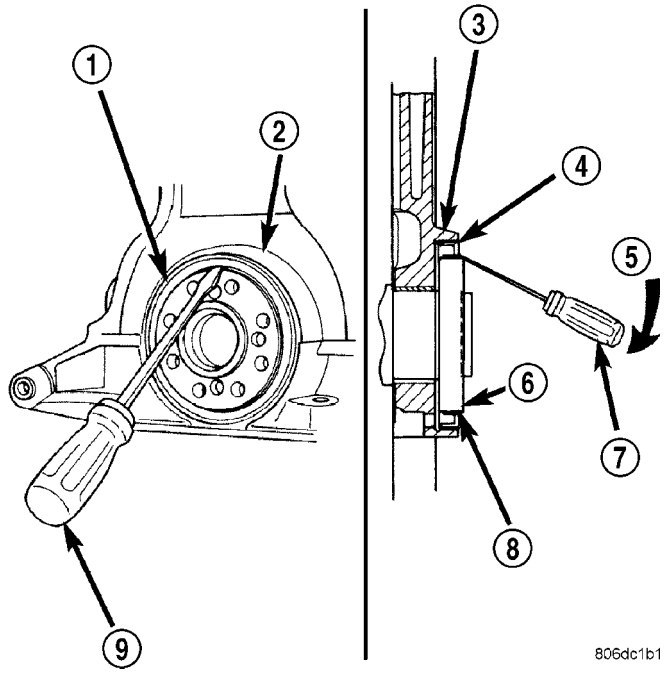

Fig. 56 Rear Crankshaft Oil Seal - Removal

1 - REAR CRANKSHAFT SEAL
2 - ENGINE BLOCK
3 - ENGINE BLOCK
4 - REAR CRANKSHAFT SEAL METAL CASE
5 - PRY IN THIS DIRECTION
6 - CRANKSHAFT
7 - SCREWDRIVER
8 - REAR CRANKSHAFT SEAL DUST LIP
9 - SCREWDRIVER

NOTE: When installing seal, no lube on seal is needed.

(1) Place Special Tool 6926-1 Seal Guide on crankshaft (Fig. 57).

(2) Position seal over guide tool (Fig. 57). Guide tool should remain on crankshaft during installation of seal. Ensure that the lip of the seal is facing towards the crankcase during installation.

CAUTION: If the seal is driven into the block past flush, this may cause an oil leak.

(3) Drive the seal into the block using Special Tool 6926-2 and handle C-4171 (Fig. 58) until the tool bottoms out against the block (Fig. 59).

(4) Install flex plate. Apply Mopar® Lock & Seal Adhesive to bolt threads and tighten bolts to 95 N·m (70 ft. lbs.).

(5) Install transaxle. Refer to TRANSMISSION/ TRANSAXLE - INSTALLATION for procedure.

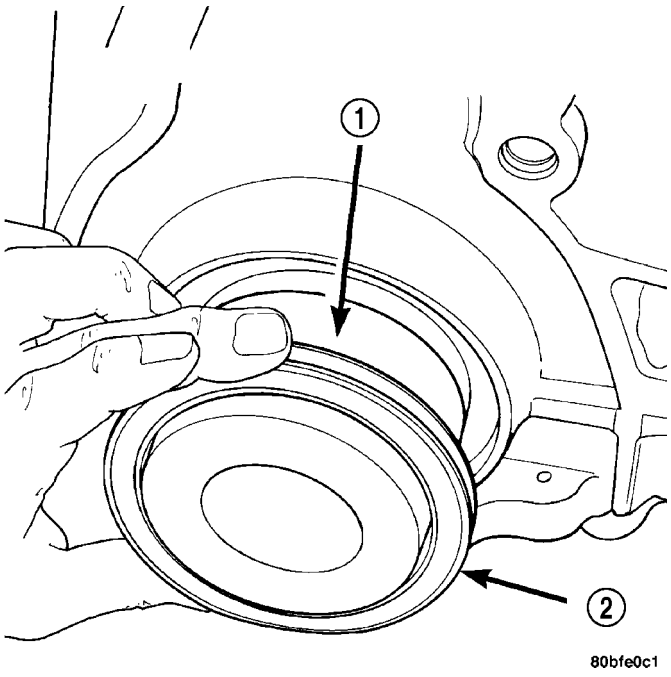

Fig. 57 Rear Crankshaft Seal and Special Tool 6926-1

1 - SPECIAL TOOL 6926–1 PILOT
2 - SEAL

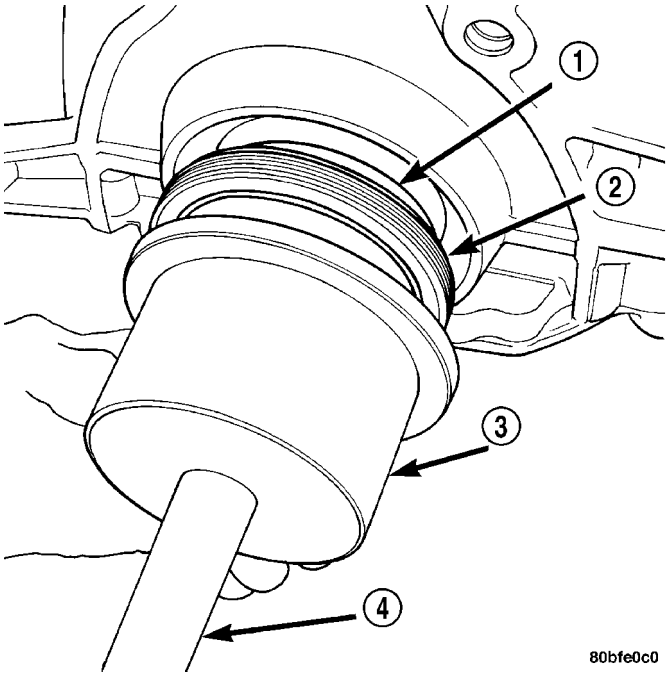

Fig. 58 Crankshaft Seal and Special Tools 6926-2 & C-4171

1 - SPECIAL TOOL 6926–1 PILOT
2 - SEAL
3 - SPECIAL TOOL 6926–2 INSTALLER
4 - SPECIAL TOOL C-4171

CRANKSHAFT OIL SEAL - REAR (Continued)

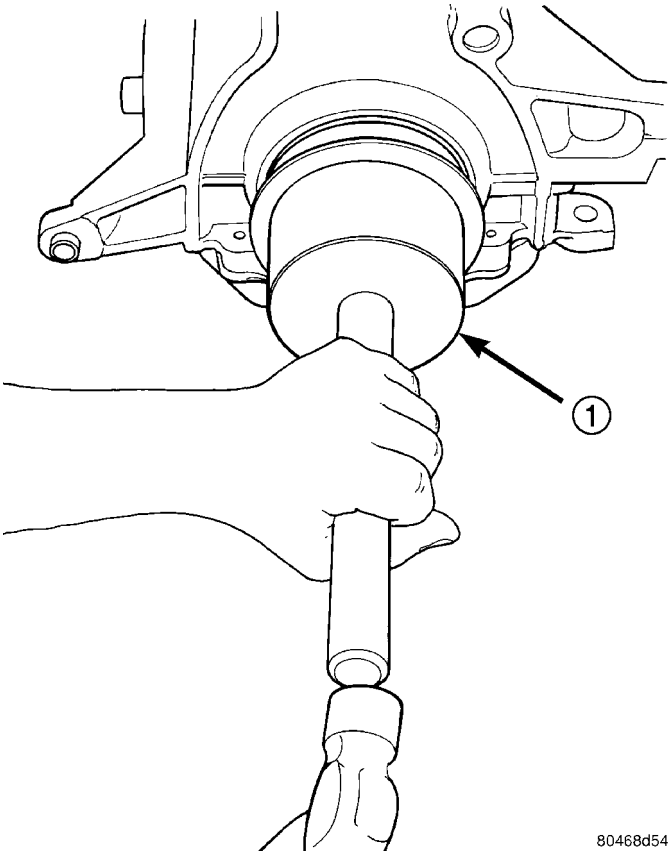

Fig. 59 Rear Crankshaft Seal - Installation

1 - SPECIAL TOOL 6926–2 INSTALLER

PISTON & CONNECTING ROD

DESCRIPTION

The pistons are made of a cast aluminum alloy. The pistons have pressed-in pins attached to forged powdered metal connecting rods. The pistons pin is offset 1 mm (0.0394 in.) towards the thrust side of the piston. The connecting rods are a cracked cap design and are not repairable. Hex head cap screws are used to provide alignment and durability in the assembly. The pistons and connecting rods are serviced as an assembly.

STANDARD PROCEDURE - PISTON TO CYLINDER BORE FITTING

NOTE: Pistons and cylinder bores should be measured at normal room temperature, 21°C (70°F).

Piston and cylinder wall must be clean and dry. Piston diameter should be measured 90 degrees to piston pin.

Piston measurement should be taken approximately 14 mm (0.551 in.) from the bottom of the skirt as shown in (Fig. 60)

Cylinder bores should be measured halfway down the cylinder bore and transverse (measurement location B) to the engine crankshaft center line shown in (Fig. 61). Refer to for Engine Specifications (Refer to 9 - ENGINE - SPECIFICATIONS). Correct piston to bore clearance must be established in order to assure quiet and economical operation.

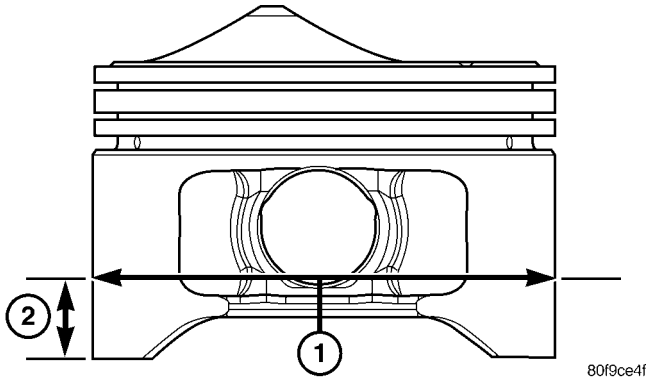

Fig. 60 Piston Measurement

1 - PISTON DIAMETER
2 - 14 mm (0.551 in.)

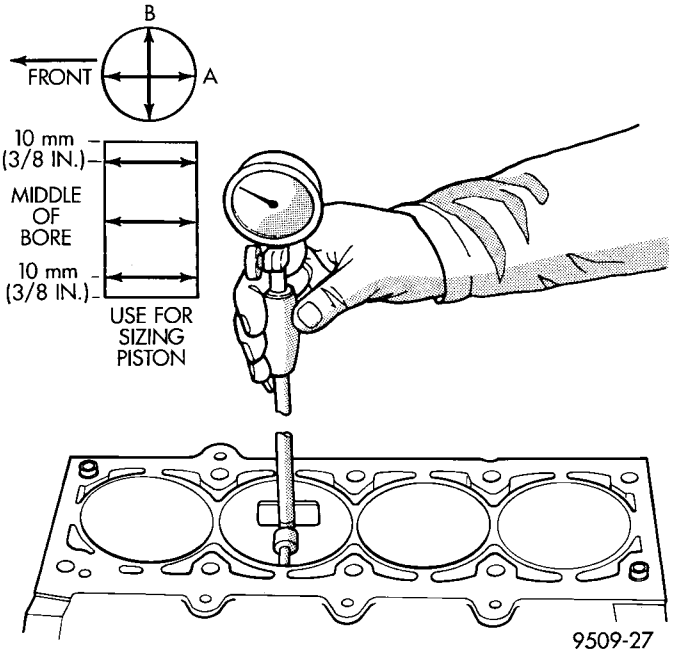

Fig. 61 Checking Cylinder Bore

REMOVAL

(1) Remove cylinder head (Refer to 9 - ENGINE/CYLINDER HEAD - REMOVAL).

(2) Remove oil pan (Refer to 9 - ENGINE/LUBRICATION/OIL PAN - REMOVAL).

(3) Remove Balance Shaft Carrier Assembly (Refer to 9 - ENGINE/VALVE TIMING/BALANCE SHAFT CARRIER - REMOVAL).

PISTON & CONNECTING ROD (Continued)

(4) Remove top ridge of cylinder bores with a reliable ridge reamer before removing pistons from cylinder block. **Be sure to keep tops of pistons covered during this operation**.

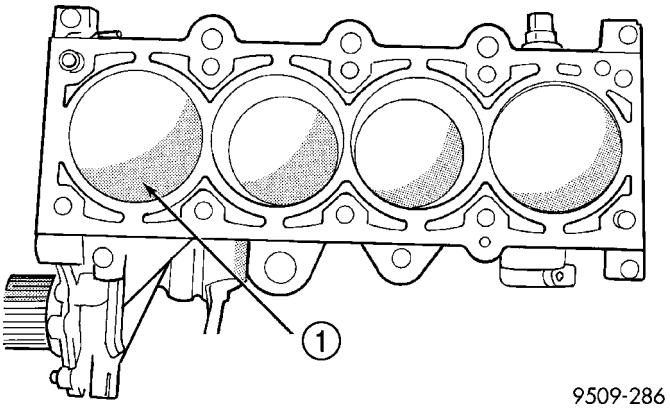

Fig. 62 Piston Markings

1 - DIRECTIONAL ARROW WILL BE IMPRINTED IN THIS AREA

(5) Pistons have a directional stamping in the front half of the piston facing towards the **front** of engine (Fig. 62).

(6) Pistons and connecting rods must be removed from top of cylinder block. Rotate crankshaft so that each connecting rod is centered in cylinder bore.

(7) Using a permanent ink or paint marker, identify cylinder number on each connecting rod cap (Fig. 63).

CAUTION: DO NOT use a number stamp or a punch to mark connecting rods. Damage to connecting rod could occur.

(8) Remove connecting rod bolts and cap. Care should be taken not to damage the fracture rod and cap surfaces.

NOTE: Do not reuse connecting rod bolts.

CAUTION: Care must be taken not to damage the fractured rod and cap joint surfaces, as engine damage many occur.

(9) To protect crankshaft journal and fractured rod surfaces, install Special Tool 8189, connecting rod guides onto connecting rod (Fig. 64). Carefully push each piston and rod assembly out of cylinder bore.

(10) Remove Special Tool 8189, connecting rod guides and re-install bearing cap on the mating rod.

NOTE: Piston and rods are serviced as an assembly.

(11) Repeat procedure for each piston and connecting rod assembly.

(12) Remove piston rings (Refer to 9 - ENGINE/ ENGINE BLOCK/PISTON RINGS - REMOVAL).

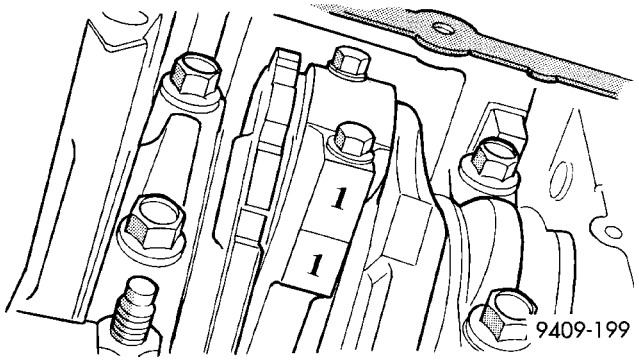

Fig. 63 Identify Connectng Rod to Cylinder - Typical

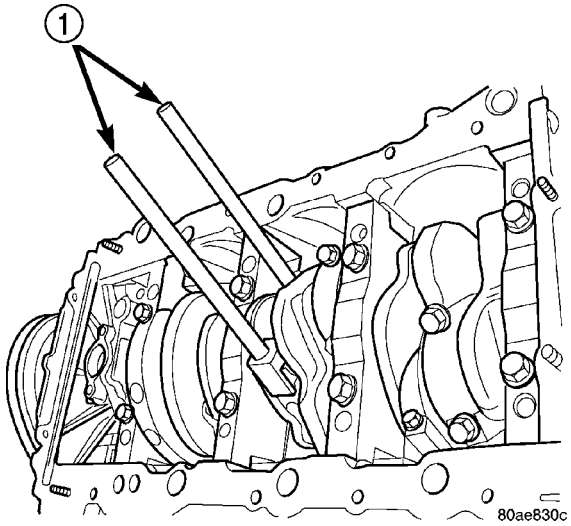

Fig. 64 Connecting Rod Guides - Typical

1 - SPECIAL TOOL 8189 CONNECTING ROD GUIDES

INSTALLATION

(1) Install piston rings on piston (Refer to 9 - ENGINE/ENGINE BLOCK/PISTON RINGS - INSTALLATION)

(2) Before installing pistons and connecting rod assemblies into the bore, be sure that compression ring gaps are staggered so that neither is in line with oil ring rail gap (Fig. 65).

(3) Before installing the ring compressor, make sure the oil ring expander ends are butted and the rail gaps located as shown in (Fig. 65). As viewed from top.

(4) Immerse the piston head and rings in clean engine oil, slide the ring compressor, over the piston (Fig. 66). **Be sure position of rings does not change during this operation** .

(5) The directional stamp on the piston should face toward the front of the engine (Fig. 62).

PISTON & CONNECTING ROD (Continued)

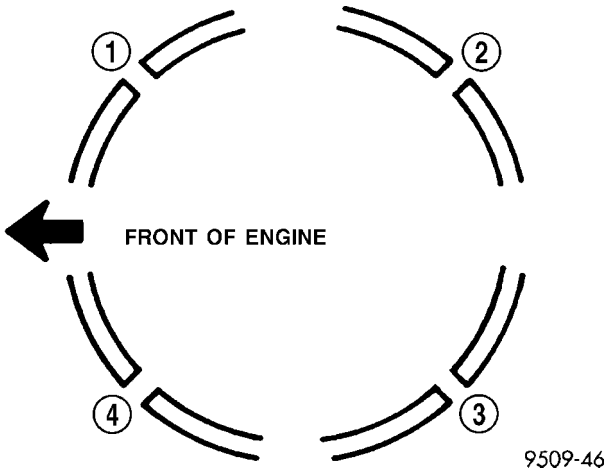

Fig. 65 Piston Ring End Gap Position

1 - GAP OF LOWER SIDE RAIL
2 - NO. 1 RING GAP
3 - GAP OF UPPER SIDE RAIL
4 - NO. 2 RING GAP AND SPACER EXPANDER GAP

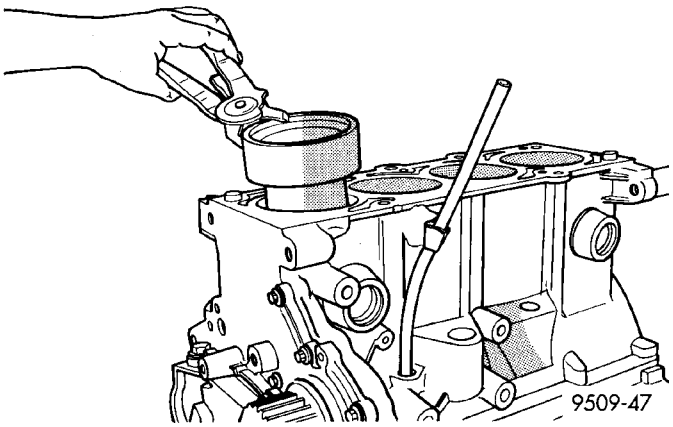

Fig. 66 Piston—Installation

(6) Rotate crankshaft so that the connecting rod journal is on the center of the cylinder bore. Lubricate connecting rod journal with clean engine oil.

(7) Install connecting rod upper bearing half into connecting rod. Install Special Tool 8189, connecting rod guides onto connecting rod (Fig. 64).

(8) Tap the piston down in cylinder bore, using a hammer handle. At the same time, guide connecting rod into position on connecting rod journal.

(9) Remove Special Tool 8189, connecting rod guides.

NOTE: The connecting rod cap bolts should not be reused.

(10) Before installing the **NEW** bolts, the threads should be coated with clean engine oil.

(11) Install connecting rod lower bearing half into connecting rod cap. Install connecting rod cap.

(12) Install each bolt finger tight then alternately torque each bolt to assemble the cap properly.

(13) Tighten the connecting rod bolts using the 2 step torque-turn method. Tighten according to the following values:

CAUTION: Do not use a torque wrench for the second step.

1. Tighten the bolts to 27 N·m (20 ft. lbs.).
2. Tighten the connecting rod bolts an additional **1/4 TURN.**

(14) Using a feeler gauge, check connecting rod side clearance (Fig. 67). (Refer to 9 - ENGINE - SPECIFICATIONS) for connecting rod side clearance.

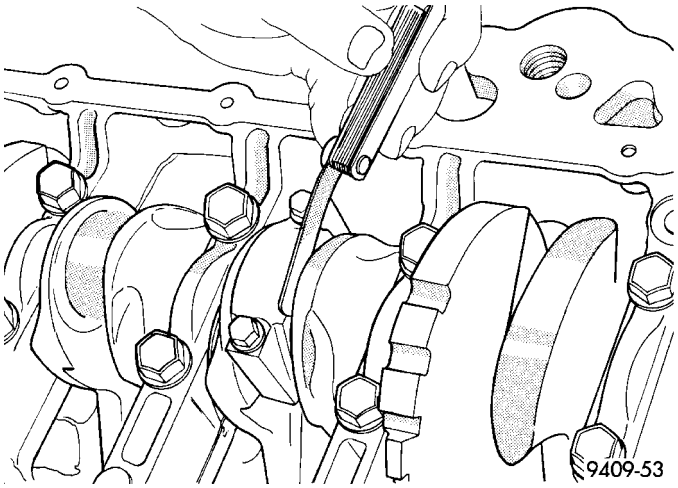

Fig. 67 Checking Connecting Rod Side Clearance - Typical

(15) Install Balance Shaft Carrier Assembly (Refer to 9 - ENGINE/VALVE TIMING/BALANCE SHAFT CARRIER - INSTALLATION).

(16) Install oil pan (Refer to 9 - ENGINE/LUBRICATION/OIL PAN - INSTALLATION).

(17) Install cylinder head (Refer to 9 - ENGINE/CYLINDER HEAD - INSTALLATION).

CONNECTING ROD BEARINGS

STANDARD PROCEDURE

CONNECTING ROD - FITTING

(1) For measuring connecting rod bearing clearance procedure and use of Plastigage(Refer to 9 - ENGINE - STANDARD PROCEDURE). For bearing clearance refer to Engine Specifications. (Refer to 9 - ENGINE - SPECIFICATIONS)

CONNECTING ROD BEARINGS (Continued)

NOTE: The rod bearing bolts should not be reused.

(2) Before installing the **NEW** bolts the threads should be oiled with clean engine oil.

(3) Install each bolt finger tight then alternately torque each bolt to assemble the cap properly.

(4) Tighten the connecting rod bolts using the 2 step torque-turn method. Tighten according to the following values:

CAUTION: Do not use a torque wrench for the second step.

1. Tighten the bolts to 27 N·m (20 ft. lbs.).
2. Tighten the connecting rod bolts an additional **1/4 TURN.**

(5) Using a feeler gauge, check connecting rod side clearance (Fig. 68). Refer to clearance specifications (Refer to 9 - ENGINE - SPECIFICATIONS).

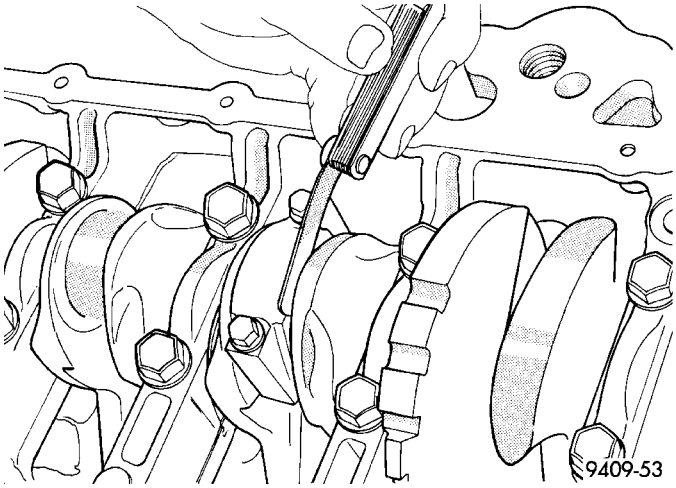

Fig. 68 Connecting Rod Side Clearance - Typical

PISTON RINGS

STANDARD PROCEDURE

PISTON RING - FITTING

(1) Wipe cylinder bore clean. Insert ring and push down with piston to ensure it is square in bore. The ring gap measurement must be made with the ring positioning at least 12 mm (0.50 inch) from bottom of cylinder bore. Check gap with feeler gauge (Fig. 69). Refer to Engine Specifications.

(2) Check piston ring to groove side clearance (Fig. 70). Refer to Engine Specifications.

REMOVAL

(1) Using a suitable ring expander, remove upper and intermediate piston rings (Fig. 71).

(2) Remove the upper oil ring side rail, lower oil ring side rail and then oil ring expander from piston.

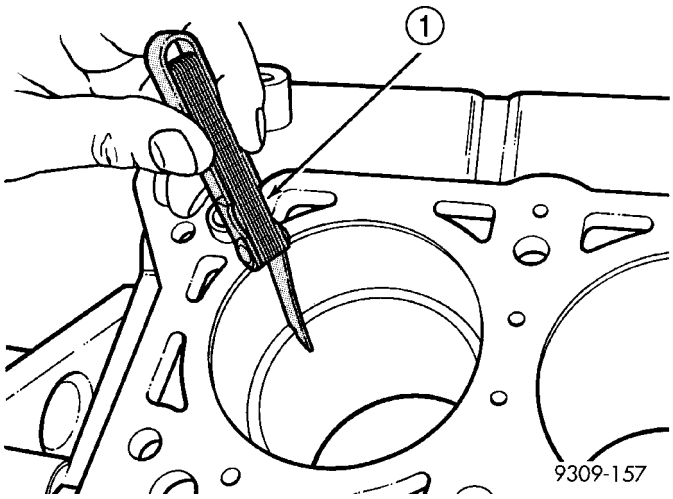

Fig. 69 Piston Ring Gap

1 - FEELER GAUGE

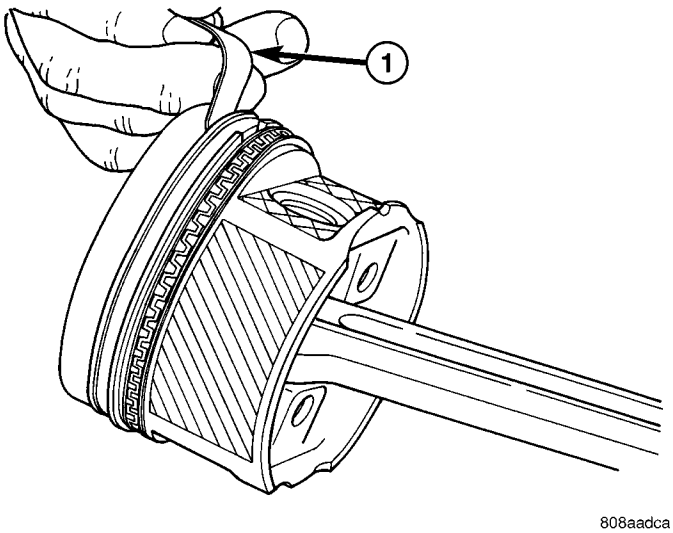

Fig. 70 Piston Ring Side Clearance

1 - FEELER GAUGE

(3) Clean ring grooves of any carbon deposits.

INSTALLATION

NOTE: The identification mark on face of upper and intermediate piston rings must point toward top of piston.

Install rings with manufacturers identification mark facing up, to the top of the piston (Fig. 72).

CAUTION: Install piston rings in the following order:

1. Oil ring expander.
2. Upper oil ring side rail.
3. Lower oil ring side rail.

PISTON RINGS (Continued)

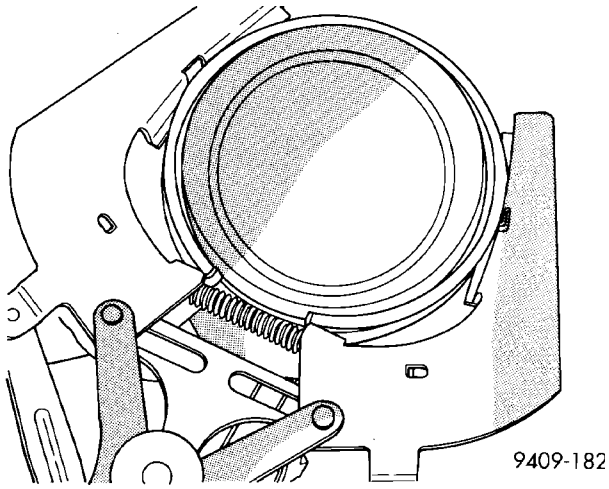

Fig. 71 Piston Rings—Removing and Installing

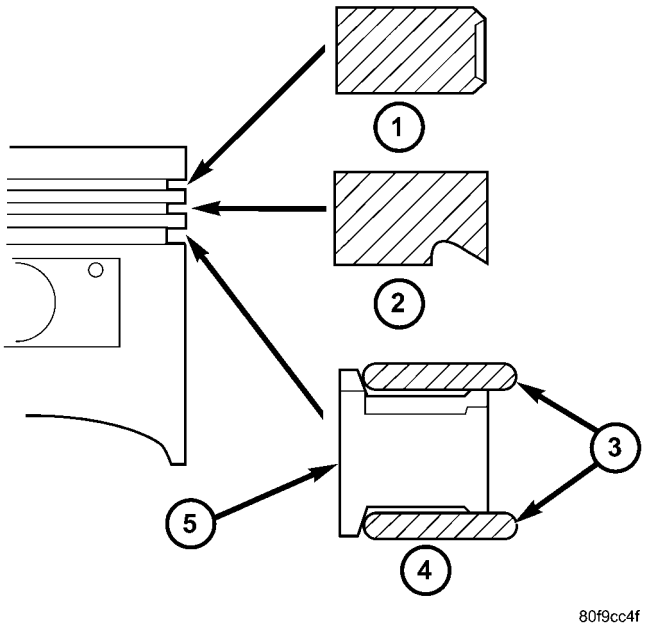

Fig. 72 Piston Ring Installation

1 - NO. 1 PISTON RING
2 - NO. 2 PISTON RING
3 - SIDE RAIL
4 - OIL RING
5 - SPACER EXPANDER

4. No. 2 Intermediate piston ring.
5. No. 1 Upper piston ring.

(1) Install oil ring expander (Fig. 72).

(2) Install upper side rail first and then the lower side rail. Install the side rails by placing one end between the piston ring groove and the oil ring expander. Hold end firmly and press down the portion to be installed until side rail is in position. **Do not use a piston ring expander (Fig. 73).**

(3) Install No. 2 piston ring and then No. 1 piston ring (Fig. 72).

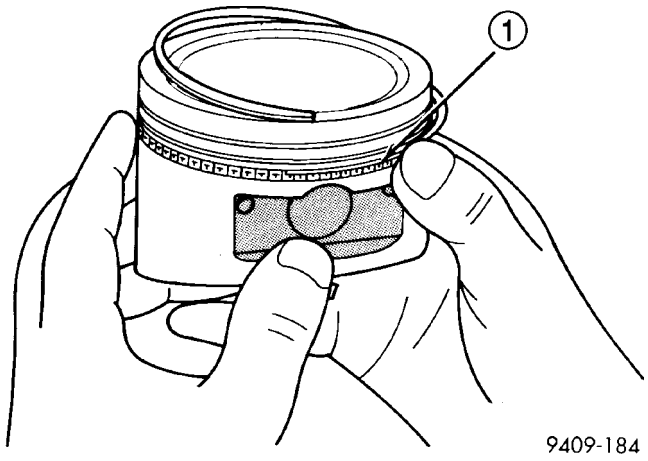

Fig. 73 Installing Side Rail

1 - SIDE RAIL END

(4) Position piston ring end gaps as shown in (Fig. 74).

(5) Position oil ring expander gap at least 45° from the side rail gaps but **not** on the piston pin center or on the thrust direction. Staggering ring gap is important for oil control.

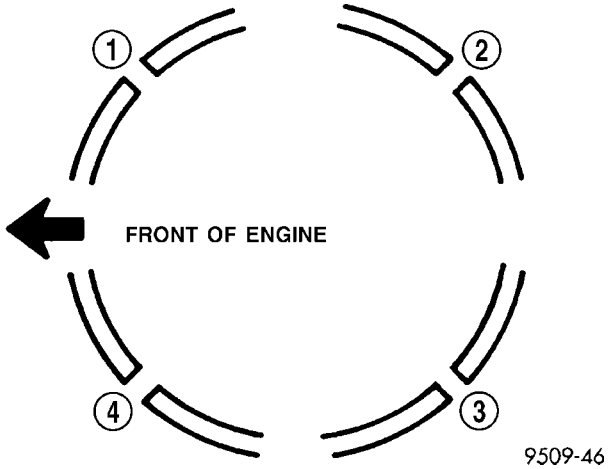

Fig. 74 Piston Ring End Gap Position

1 - GAP OF LOWER SIDE RAIL
2 - NO. 1 RING GAP
3 - GAP OF UPPER SIDE RAIL
4 - NO. 2 RING GAP AND SPACER EXPANDER GAP

VIBRATION DAMPER

REMOVAL

(1) Remove accesory drive belts. (Refer to 7 - COOLING/ACCESSORY DRIVE/DRIVE BELTS - REMOVAL)

(2) Remove crankshaft damper bolt.

(3) Remove damper using Special Tool 3-Jaw Puller 1026 and Insert 6827–A (Fig. 75).

VIBRATION DAMPER (Continued)

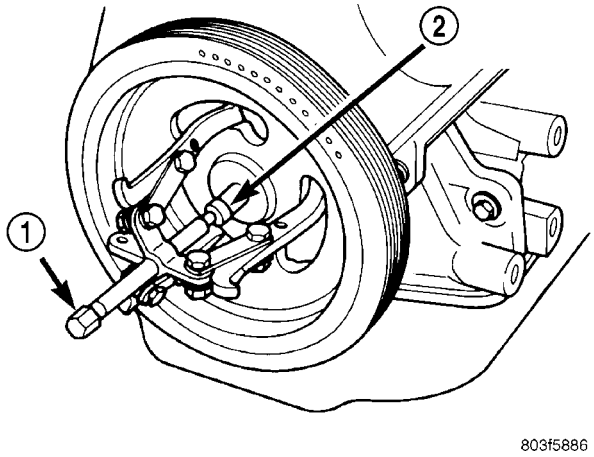

Fig. 75 Crankshaft Vibration Damper - Removal

1 - SPECIAL TOOL 1026 3-JAW PULLER
2 - SPECIAL TOOL 6827–A INSERT

INSTALLATION

(1) Install crankshaft vibration damper using M12 1.75 x 150 mm bolt, washer, thrust bearing and nut from Special Tool 6792 (Fig. 76).

(2) Install crankshaft vibration damper bolt and tighten to 142 N·m (105 ft. lbs.).

(3) Install accessory drive belts. (Refer to 7 - COOLING/ACCESSORY DRIVE/DRIVE BELTS - INSTALLATION)

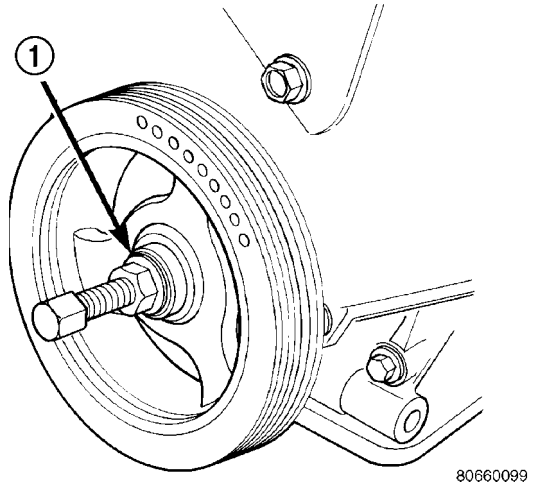

Fig. 76 Crankshaft Vibration Damper - Installation

1 - M12–1.75 × 150 MM BOLT, WASHER AND THRUST BEARING FROM SPECIAL TOOL 6792

STRUCTURAL COLLAR

REMOVAL

(1) Raise vehicle on hoist.

(2) Remove engine front mount bracket and front insulator mount. (Refer to 9 - ENGINE/ENGINE MOUNTING/FRONT MOUNT - REMOVAL)

(3) Remove structural collar attaching bolts (Fig. 77).

(4) Remove collar.

INSTALLATION

CAUTION: Torque procedure for the structural collar must be followed or damage could occur to oil pan and collar.

(1) Perform the following steps for installing structural collar. Refer to (Fig. 77):

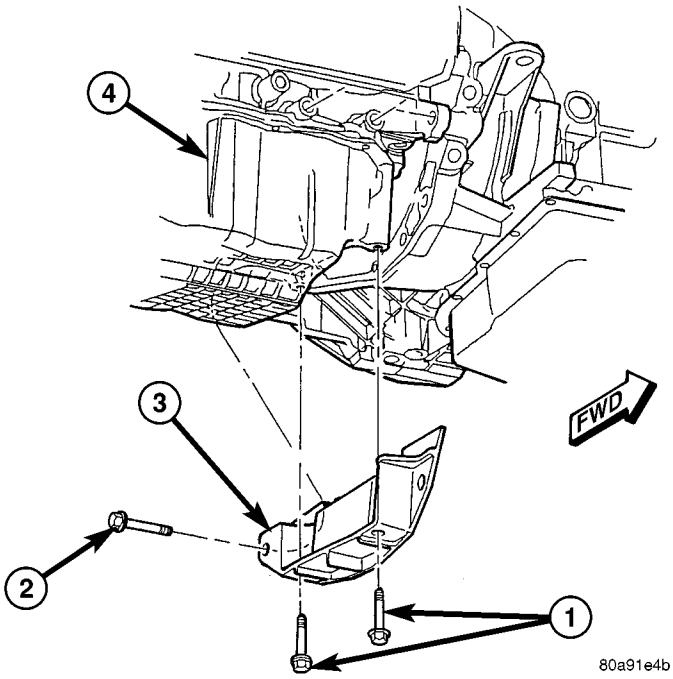

Fig. 77 Structural Collar

1 - BOLT - COLLAR TO OIL PAN
2 - BOLT - COLLAR TO TRANSAXLE
3 - STRUCTURAL COLLAR
4 - OIL PAN

- Step 1: Position collar between transaxle and oil pan. Install collar to transaxle bolt, **hand start only**.
- Step 2: Install collar to oil pan bolts, **hand snug only.**
- Step 3: Final torque collar to transaxle bolts to 101 N·m (75 ft. lbs.)
- Step 4: Final torque collar to oil pan bolts to 54 N·m (40 ft. lbs.).

(2) Install engine front mount bracket and insulator. (Refer to 9 - ENGINE/ENGINE MOUNTING/FRONT MOUNT - INSTALLATION)

(3) Lower vehicle.

ENGINE MOUNTING

DESCRIPTION

The engine mounting system consist of four mounts; right and a left side support the powertrain, and a front and a rear mount control powertrain torque. The right side mount is a hydro-type (Fig. 78), all others are of molded rubber material.

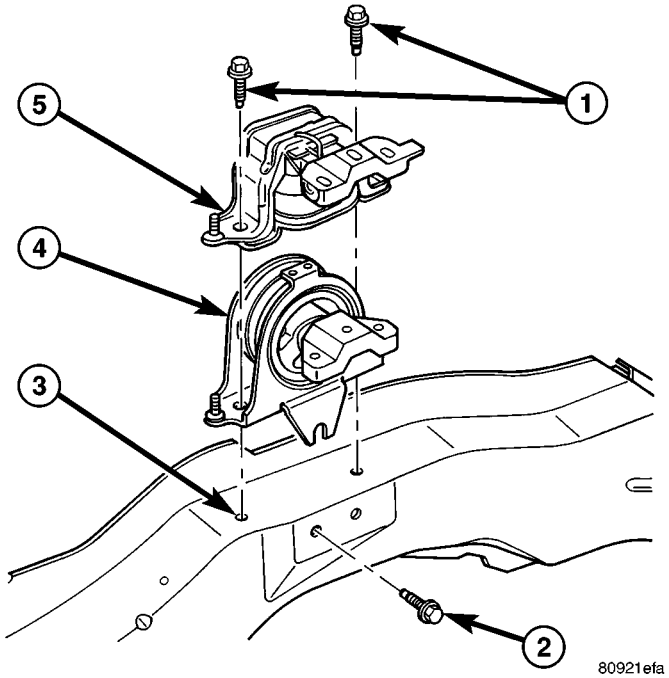

Fig. 78 Engine Hydro-type Mount - Right Side

1 - BOLT
2 - BOLT
3 - FRAME RAIL
4 - RIGHT MOUNT - 2.4L ENGINE
5 - RIGHT MOUNT - 3.3/3.8L ENGINE

FRONT MOUNT

REMOVAL

(1) Raise vehicle on hoist.

(2) Remove the front engine mount through bolt from the insulator (Fig. 79).

(3) Remove the engine front mount bolts and remove the insulator assembly (Fig. 79).

(4) Remove the front mounting bracket from engine, if necessary (Fig. 79).

INSTALLATION

(1) Install the front mount bracket to engine, if removed (Fig. 79).

(2) Install the insulator mount assembly (Fig. 79).

(3) Install the front engine mount through bolt to the insulator (Fig. 79).

(4) Lower the vehicle.

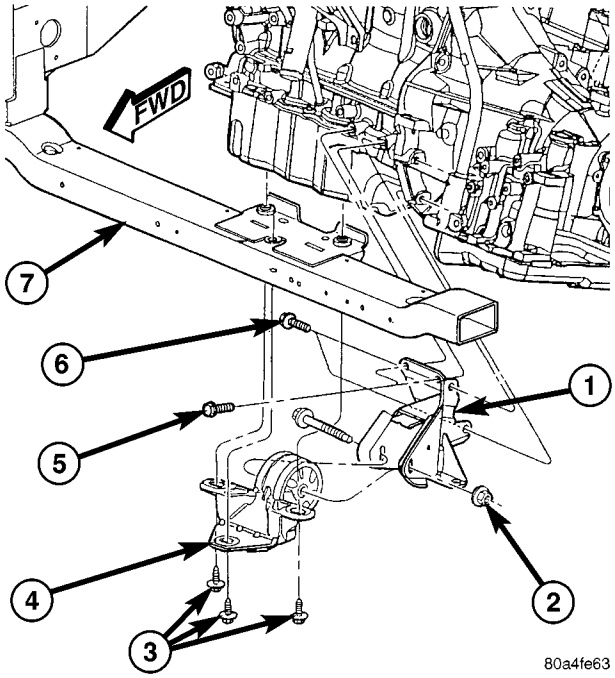

Fig. 79 Front Mount and Bracket

1 - BRACKET - FRONT MOUNT
2 - NUT - 68 N·m (50 ft. lbs.)
3 - BOLT - 54 N·m (40 ft. lbs.)
4 - MOUNT - FRONT INSULATOR
5 - BOLT - 68 N·m (50 ft. lbs.)
6 - BOLT - 68 N·m (50 ft. lbs.)
7 - FRONT CROSSMEMBER

LEFT MOUNT

REMOVAL

(1) Raise the vehicle on hoist.

(2) Remove the left front wheel.

(3) Remove the left mount through bolt access cover.

(4) Support the transaxle with a suitable jack.

(5) Remove the engine front mount through bolt to allow left mount removal clearance (Fig. 79).

(6) Remove the left mount through frame rail bolt (Fig. 80).

(7) Lower transaxle for access to horizontal bolts.

(8) Remove the horizontal bolts from the mount to the transaxle (Fig. 81).

NOTE: To remove mount, additional lowering of transaxle may be required.

(9) Remove left mount.

INSTALLATION

(1) Install left mount on transaxle (Fig. 81).

(2) Raise transaxle with jack until left mount is in position.

(3) Install left mount through bolt (Fig. 80).

LEFT MOUNT (Continued)

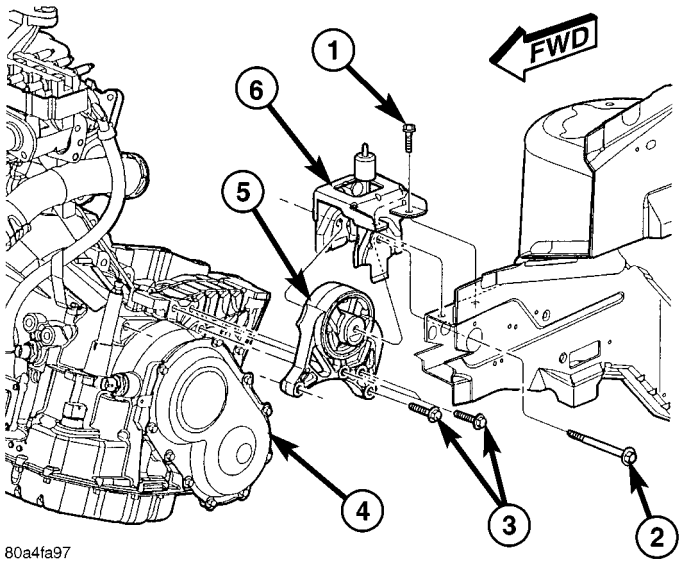

Fig. 80 Left Mount To Bracket

1 - BOLT - BRACKET TO FRAME RAIL 68 N·m (50 ft. lbs.)
2 - BOLT - MOUNT TO RAIL THRU 75 N·m (55 ft. lbs.)
3 - BOLT - LEFT MOUNT TO TRANSAXLE 54 N·m (40 ft. lbs.)
4 - TRANSAXLE
5 - MOUNT - LEFT
6 - BRACKET - LEFT MOUNT

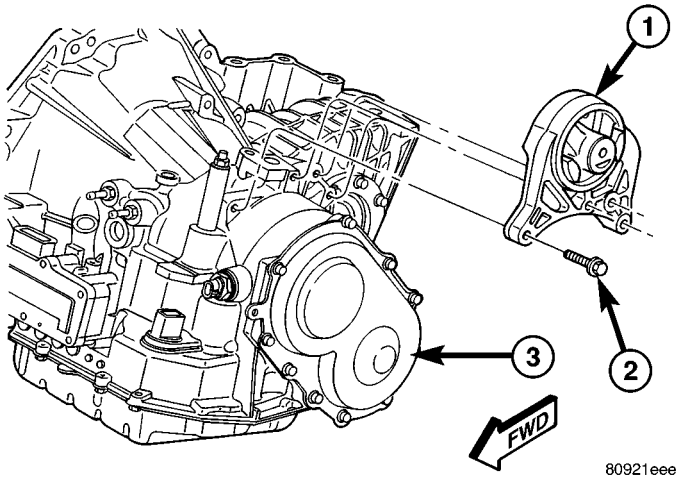

Fig. 81 Left Mount - 41TE Transaxle

1 - LEFT MOUNT ASSEMBLY
2 - BOLT - 54 N·m (40 ft. lbs.)
3 - TRANSAXLE - 41TE

(4) Install left mount through bolt access cover.
(5) Install front mount through bolt (Fig. 79).
(6) Install left front wheel.
(7) Lower vehicle.

REAR MOUNT

REMOVAL

(1) Raise vehicle on hoist.
(2) Remove the rear mount heat shield (Fig. 82).

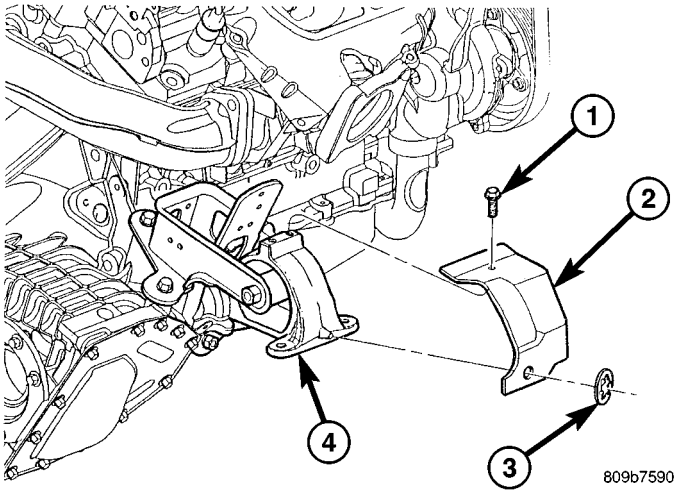

Fig. 82 Rear Mount Heat Shield

1 - BOLT - HEAT SHIELD 11 N·m (100 in. lbs.)
2 - HEAT SHIELD
3 - CLIP
4 - REAR MOUNT

(3) Remove the through bolt from the mount and rear mount bracket (Fig. 83).
(4) Remove the mount bolts (Fig. 83).
(5) Remove the rear mount (Fig. 83).

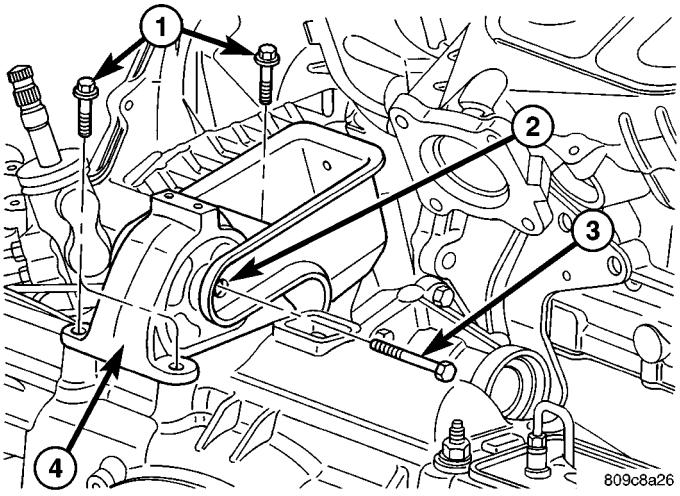

Fig. 83 Rear Mount

1 - BOLT 54 N·m (40 ft. lbs.)
2 - REAR MOUNT BRACKET
3 - THRU-BOLT 54 N·m (40 ft. lbs.)
4 - REAR MOUNT

(6) For rear mount bracket removal, remove the bolts attaching bracket to transaxle (Fig. 84).
(7) Remove rear mount bracket.

REAR MOUNT (Continued)

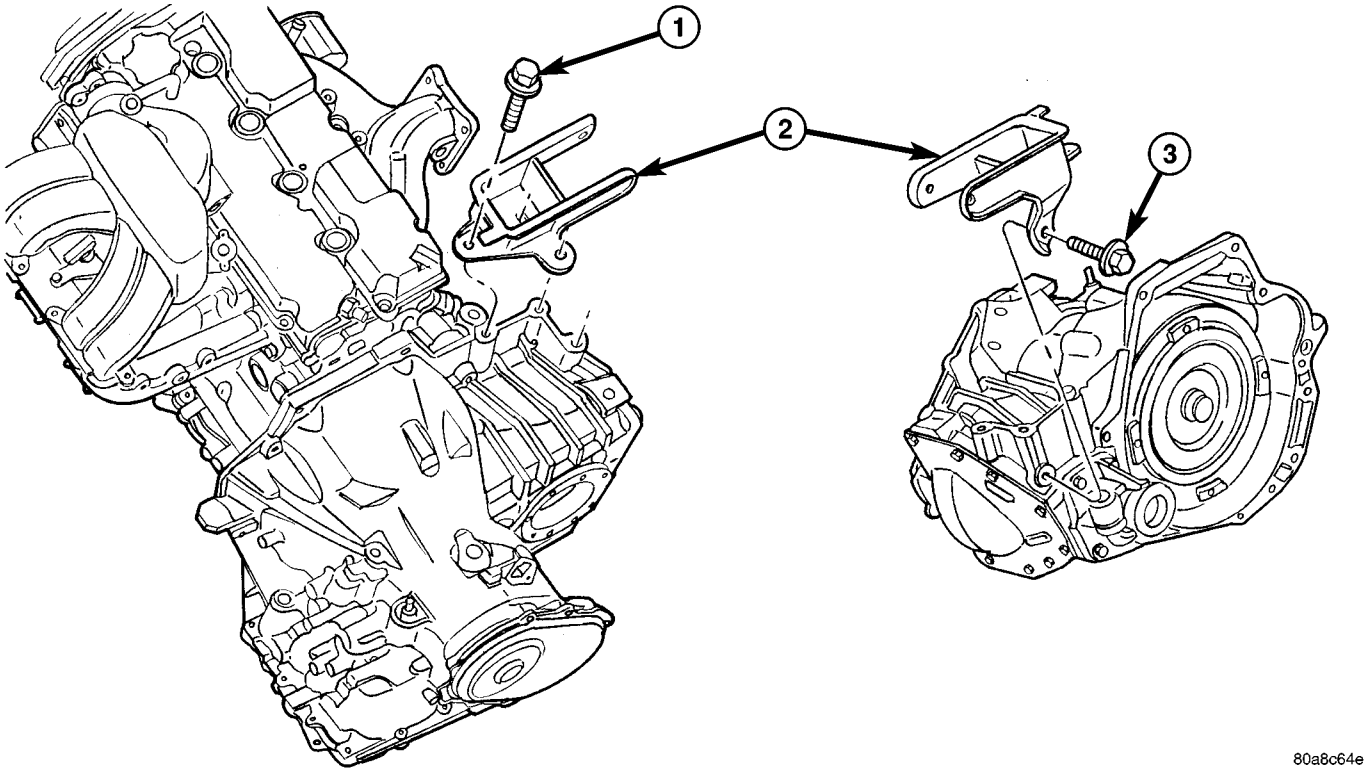

Fig. 84 Rear Mount Bracket - (all engines)

1 - BOLT - VERTICAL 102 N·m (75 ft. lbs.)
2 - BRACKET - REAR MOUNT
3 - BOLT - HORIZONTAL 102 N·m (75 ft. lbs.)

INSTALLATION

(1) Install rear mount bracket, if removed (Fig. 84).

(2) Install the rear mount and bolts (Fig. 83). Tighten bolts to 54 N·m (40 ft. lbs.).

(3) Install the mount through bolt to the mount and bracket (Fig. 83). Tighten through bolt to 54 N·m (40 ft. lbs.).

(4) Install the rear mount heat shield (Fig. 82).

(5) Lower vehicle on hoist.

RIGHT MOUNT

REMOVAL

(1) Remove air cleaner housing lid and clean air hose from throttle body.

(2) Remove air cleaner element and housing.

(3) Disconnect make-up air hose from cylinder head cover.

(4) Remove the load on the right engine mount by carefully supporting the engine assembly with a floor jack.

(5) Disconnect electrical harness support clips from engine mount bracket.

(6) Remove the vertical bolts attaching the engine mount to the frame rail (Fig. 85).

(7) Loosen the horizontal bolt attaching the engine mount to the frame rail (Fig. 85).

(8) Remove the bolts attaching the engine mount to the engine bracket (Fig. 85).

(9) Remove the right engine mount (Fig. 85).

INSTALLATION

(1) Position right engine mount and install frame rail to mount vertical bolts (Fig. 85).

(2) Tighten engine right mount to rail horizontal bolt (Fig. 85).

(3) Install mount to engine bracket bolts (Fig. 85).

(4) Connect electrical harness support clips to engine mount bracket.

(5) Remove jack from under engine.

(6) Connect make-up air hose to cylinder head cover.

(7) Install air cleaner housing and element.

(8) Install air cleaner housing lid and clean air tube to throttle body.

RIGHT MOUNT (Continued)

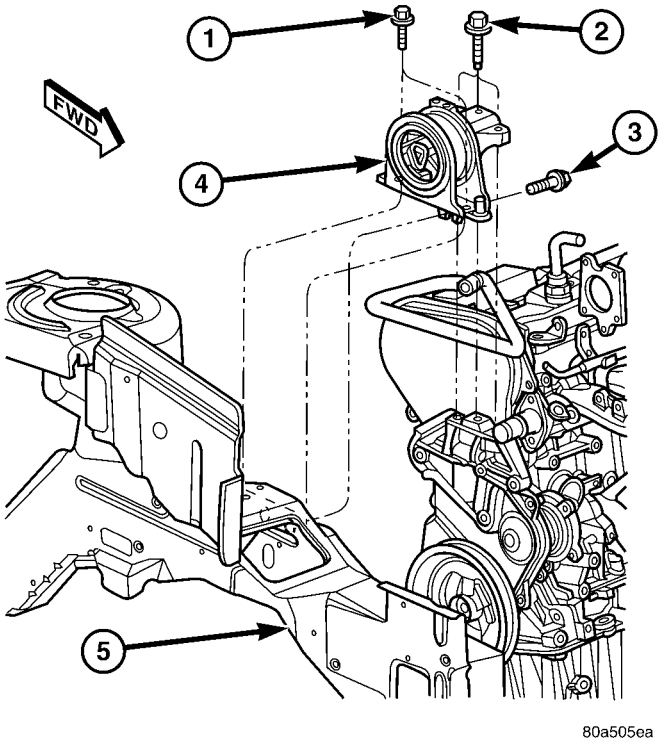

Fig. 85 Right Mount to Rail and Engine

1 - BOLT - MOUNT TO RAIL 68 N·m (50 ft. lbs.)
2 - BOLT - MOUNT TO ENGINE 54 N·m (40 ft. lbs.)
3 - BOLT - MOUNT TO RAIL (HORIZONTAL) 68 N·m (50 ft. lbs.)
4 - RIGHT ENGINE MOUNT
5 - RIGHT FRAME RAIL

LUBRICATION

DESCRIPTION

The lubrication system is a full-flow filtration, pressure feed type. The oil pump is mounted in the front engine cover and driven by the crankshaft.

OPERATION

Engine oil drawn up through the pickup tube and is pressurized by the oil pump and routed through the full-flow filter to the main oil gallery running the length of the cylinder block. A diagonal hole in each bulkhead feeds oil to each main bearing. Drilled passages within the crankshaft route oil from main bearing journals to connecting rod journals. Balance shaft lubrication is provided through an oil passage from the number one main bearing cap through the balance shaft carrier support leg. This passage directly supplies oil to the front bearings and internal machined passages in the shafts that routes oil from front to the rear shaft bearing journals. A vertical hole at the number five bulkhead routes pressurized oil through a restrictor (integral to the cylinder head gasket) up past a cylinder head bolt to an oil gallery running the length of the cylinder head. The camshaft journals are partially slotted to allow a predetermined amount of pressurized oil to pass into the bearing cap cavities. Lubrication of the camshaft lobes are provided by small holes in the camshaft bearing caps that are directed towards each lobe. Oil returning to the pan from pressurized components supplies lubrication to the valve stems. Cylinder bores and wrist pins are splash lubricated from directed slots on the connecting rod thrust collars (Fig. 86).

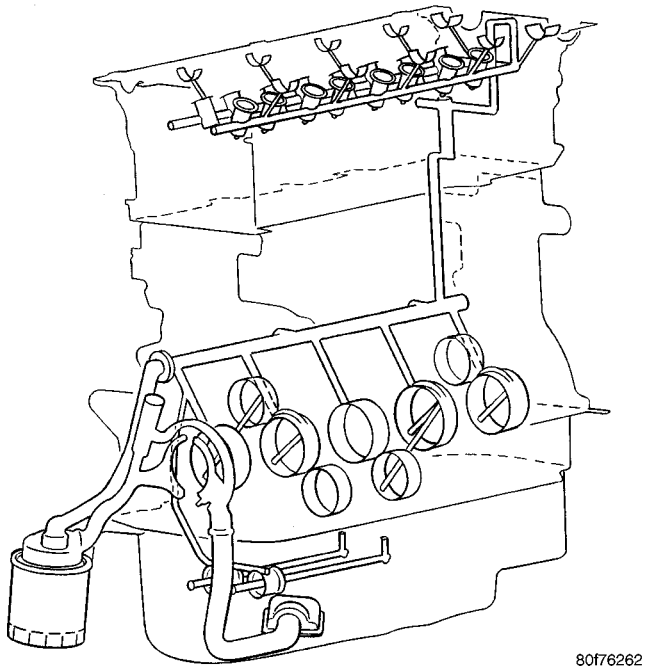

Fig. 86 Engine Lubrication System

DIAGNOSIS AND TESTING - CHECKING ENGINE OIL PRESSURE

(1) Disconnect and remove oil pressure switch. (Refer to 9 - ENGINE/LUBRICATION/OIL PRESSURE SENSOR/SWITCH - REMOVAL)

(2) Install Special Tools C-3292 Gauge with 8406 Adaptor fitting.

(3) Start engine and record oil pressure. Refer to Specifications for correct oil pressure requirements. (Refer to 9 - ENGINE - SPECIFICATIONS)

CAUTION: If oil pressure is 0 at idle, do not perform the 3000 RPM test

(4) If oil pressure is 0 at idle. Shut off engine, check for pressure relief valve stuck open, a clogged oil pick-up screen or a damaged oil pick-up tube O-ring.

(5) After test is complete, remove test gauge and fitting.

LUBRICATION (Continued)

(6) Install oil pressure switch and connector. (Refer to 9 - ENGINE/LUBRICATION/OIL PRESSURE SENSOR/SWITCH - INSTALLATION)

OIL

STANDARD PROCEDURE

ENGINE OIL LEVEL CHECK

The best time to check engine oil level is after it has sat overnight, or if the engine has been running, allow the engine to be shut off for at least 5 minutes before checking oil level.

Checking the oil while the vehicle is on level ground will improve the accuracy of the oil level reading. Remove dipstick and observe oil level. Add oil only when the level is at or below the ADD mark (Fig. 87).

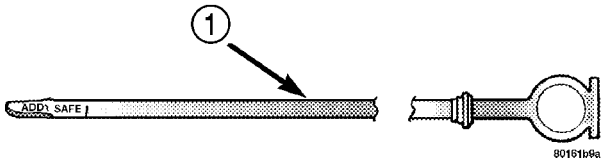

Fig. 87 Oil Level

1 - ENGINE OIL LEVEL DIPSTICK

STANDARD PROCEDURE - ENGINE OIL AND FILTER CHANGE

Change engine oil at mileage and time intervals described in the Maintenance Schedule. (Refer to LUBRICATION & MAINTENANCE/MAINTENANCE SCHEDULES - DESCRIPTION)

WARNING: NEW OR USED ENGINE OIL CAN BE IRRITATING TO THE SKIN. AVOID PROLONGED OR REPEATED SKIN CONTACT WITH ENGINE OIL. CONTAMINANTS IN USED ENGINE OIL, CAUSED BY INTERNAL COMBUSTION, CAN BE HAZARDOUS TO YOUR HEALTH. THOROUGHLY WASH EXPOSED SKIN WITH SOAP AND WATER. DO NOT WASH SKIN WITH GASOLINE, DIESEL FUEL, THINNER, OR SOLVENTS, HEALTH PROBLEMS CAN RESULT. DO NOT POLLUTE, DISPOSE OF USED ENGINE OIL PROPERLY. CONTACT YOUR DEALER OR GOVERNMENT AGENCY FOR LOCATION OF COLLECTION CENTER IN YOUR AREA.

Run engine until achieving normal operating temperature.

(1) Position the vehicle on a level surface and turn engine off.

(2) Remove oil fill cap.

(3) Hoist and support vehicle on safety stands. Refer to Hoisting and Jacking Recommendations. (Refer to LUBRICATION & MAINTENANCE/HOISTING - STANDARD PROCEDURE)

(4) Place a suitable drain pan under crankcase drain.

(5) Remove drain plug from crankcase and allow oil to drain into pan. Inspect drain plug threads for stretching or other damage. Replace drain plug and gasket if damaged.

(6) Remove oil filter. (Refer to 9 - ENGINE/LUBRICATION/OIL FILTER - REMOVAL)

(7) Install and tighten drain plug in crankcase.

(8) Install new oil filter. (Refer to 9 - ENGINE/LUBRICATION/OIL FILTER - INSTALLATION)

(9) Lower vehicle and fill crankcase with specified type and amount of engine oil. (Refer to LUBRICATION & MAINTENANCE/FLUID TYPES - DESCRIPTION)

(10) Install oil fill cap.

(11) Start engine and inspect for leaks.

(12) Stop engine and inspect oil level.

NOTE: Care should be exercised when disposing used engine oil after it has been drained from a vehicle engine. Refer to the WARNING listed above.

OIL FILTER

DESCRIPTION

The engine oil filter (Fig. 88) is a high quality full-flow, disposable type. Replace the oil filter with a Mopar® or the equivalent.

REMOVAL

(1) Raise vehicle on hoist.

(2) Position an oil collecting container under oil filter location.

CAUTION: When servicing the oil filter avoid deforming the filter can by installing the remove/install tool band strap against the can to base lock seam. The lock seam joining the can to the base is reinforced by the base plate.

(3) Using a suitable filter wrench, turn oil filter (Fig. 88) counterclockwise to remove.

INSTALLATION

(1) Clean and check filter mounting surface. The surface must be smooth, flat and free of debris or pieces of gasket.

(2) Lubricate new oil filter gasket with clean engine oil.

OIL FILTER (Continued)

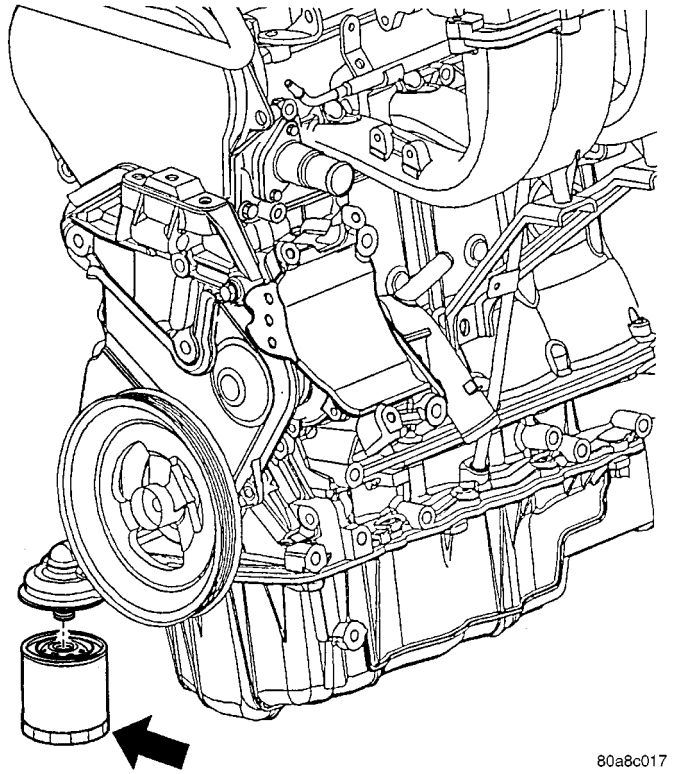

Fig. 88 Oil Filter

(3) Screw oil filter (Fig. 88) on until the gasket contacts base. Tighten to 12 N·m (105 in. lbs.).

OIL PAN

REMOVAL

(1) Disconnect negative battery cable.
(2) Raise vehicle on hoist and drain engine oil.
(3) Remove structural collar. (Refer to 9 - ENGINE/ENGINE BLOCK/STRUCTURAL COVER - REMOVAL)
(4) Remove air conditioning compressor bracket to oil pan bolt.

NOTE: The oil pan is sealed with rtv and may need to be pryed apart.

(5) Remove bolts attaching oil pan.
(6) Insert pry bar at specified locations (Fig. 89) (Fig. 90) (Fig. 91) and gently pry oil pan away from the engine.
(7) Clean oil pan and block surfaces.Clean cured RTV from oil pan and bed plate with a plastic or brass scraper.
(8) Clean all sealing surfaces with MOPAR® Brake Parts Cleaner.
(9) Inspect surfaces for damage, replace as needed.

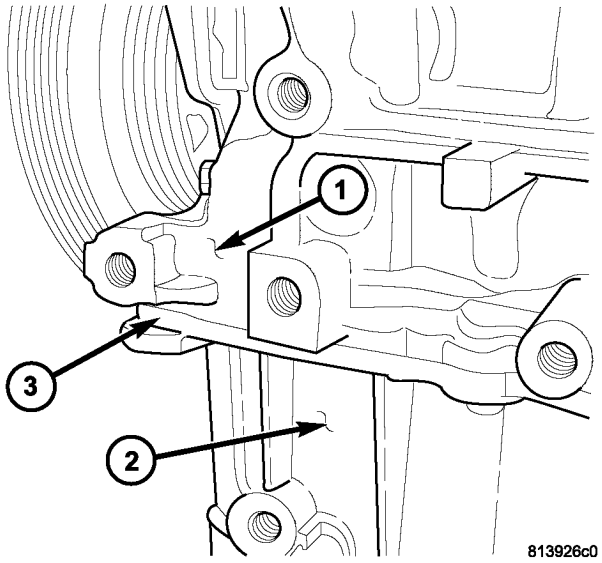

Fig. 89 Left Front Pry Point

1 - BED PLATE
2 - OIL PAN
3 - PRY POINT

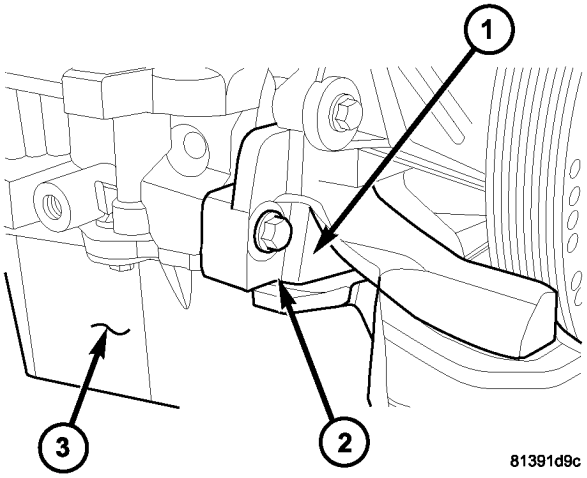

Fig. 90 Right Front Pry Point

1 - OIL FILTER ADAPTER
2 - PRY POINT
3 - OIL PAN

INSTALLATION

NOTE: You must assemble oil pan to bed plate before RTV "skins over". If RTV skins before assembly, parts must be cleaned and a new bead of RTV applied.

OIL PAN (Continued)

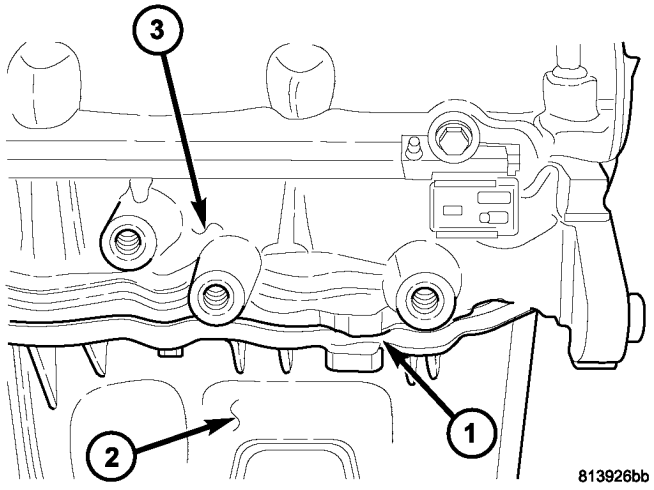

Fig. 91 Left Rear Pry Point

1 - PPRY POINT
2 - OIL PAN
3 - BED PLATE

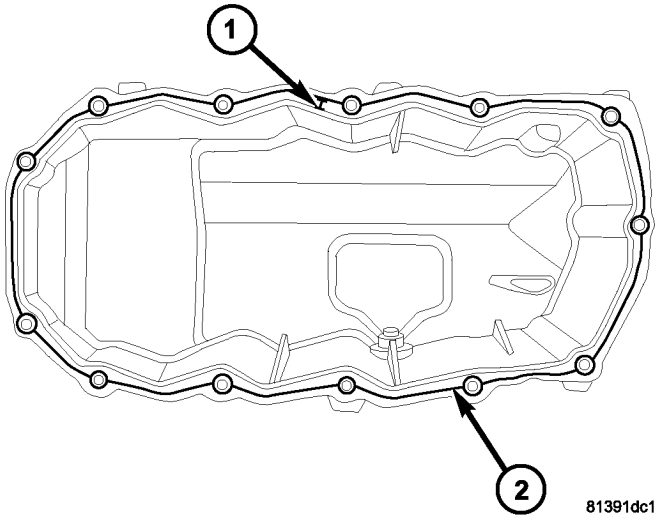

Fig. 92 Oil Pan Sealing

1 - 1 mm FROM CHAMFER
2 - RTV BEAD

(1) Apply 3 - 4 mm diameter bead of MOPAR® Engine RTV around the perimeter of the oil pan flange, 1 mm away from the chamfer on the inner edge of the oil pan (Fig. 92).

(2) Position oil pan on bedplate.

(3) Install oil pan attatching bolts and tighten to 12 N·m (105 in. lbs.).

(4) Install air conditioning compressor bracket to oil pan bolt.

(5) Install structural collar (Refer to 9 - ENGINE/ENGINE BLOCK/STRUCTURAL COVER - INSTALLATION).

(6) Lower vehicle and fill engine crankcase with proper oil to correct level.

(7) Connect negative battery cable.

(8) Start engine and check for leaks.

OIL PRESSURE SWITCH

REMOVAL

(1) Raise vehicle.

(2) Position oil collecting container under pressure switch location.

(3) Disconnect oil pressure switch electrical connector and remove switch (Fig. 93).

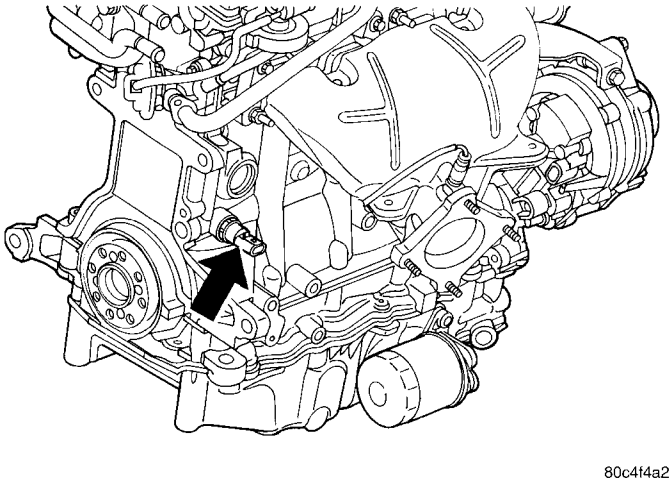

Fig. 93 Engine Oil Pressure Switch

INSTALLATION

(1) Install oil pressure switch. Torque switch to 21 N·m (190 in. lbs.) (Fig. 93).

(2) Connect electrical connector

(3) Lower vehicle.

(4) Start engine and allow to run a minimum of 2 minutes.

(5) Shut engine off and check engine oil level. Adjust level as necessary.

OIL PUMP

REMOVAL

(1) Disconnect negative cable from battery.

(2) Remove timing belt (Refer to 9 - ENGINE/VALVE TIMING/TIMING BELT AND SPROCKETS - REMOVAL).

(3) Remove timing belt rear cover (Refer to 9 - ENGINE/VALVE TIMING/TIMING BELT COVER(S) - REMOVAL).

OIL PUMP (Continued)

(4) Remove oil pan (Refer to 9 - ENGINE/LUBRICATION/OIL PAN - REMOVAL).

(5) Remove crankshaft sprocket using Special Tools 6793 and C-4685-C2 (Fig. 94).

(6) Remove crankshaft key (Fig. 95).

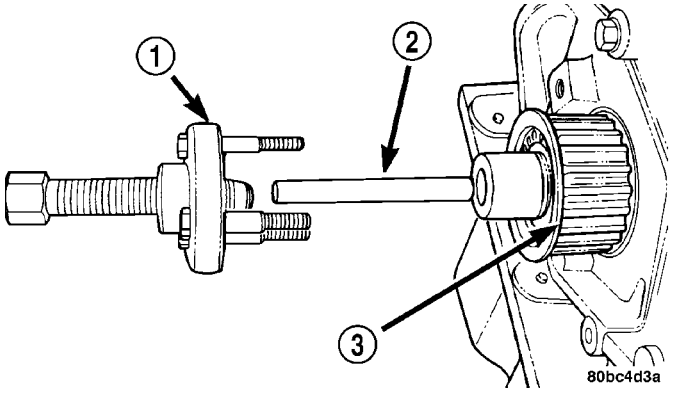

Fig. 94 Crankshaft Sprocket - Removal

1 - SPECIAL TOOL 6793
2 - SPECIAL TOOL C-4685–C2
3 - CRANKSHAFT SPROCKET

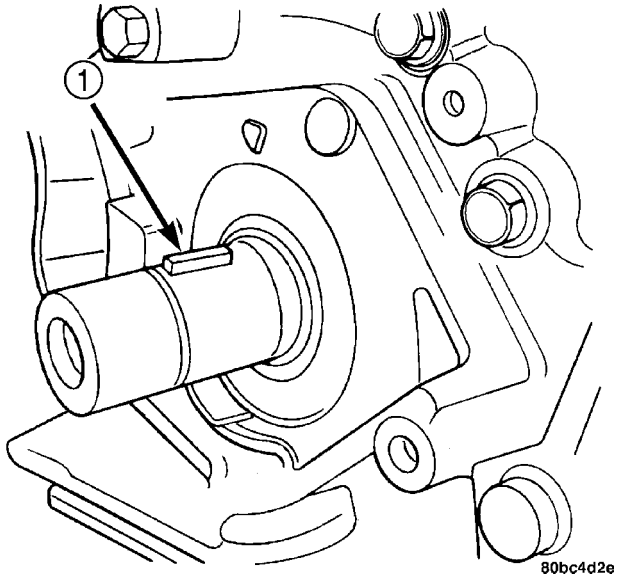

Fig. 95 Crankshaft Key

1 - CRANKSHAFT KEY

(7) Remove oil pick-up tube.

(8) Remove oil pump (Fig. 96) and front crankshaft seal.

DISASSEMBLY

(1) To remove the relief valve, proceed as follows:

(a) Remove the threaded plug and gasket from the oil pump (Fig. 97).

(b) Remove spring and relief valve (Fig. 97).

(2) Remove oil pump cover fasteners, and lift off cover (Fig. 98).

(3) Remove pump rotors (Fig. 98).

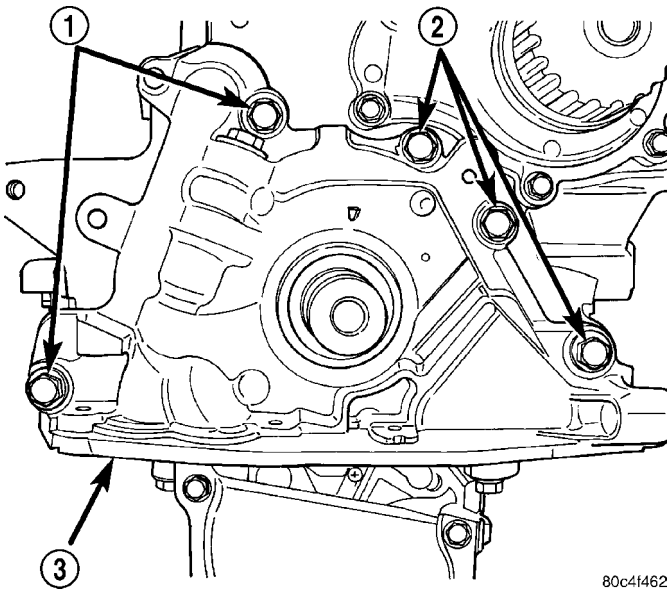

Fig. 96 Oil Pump

1 - BOLTS
2 - BOLTS
3 - OIL PUMP

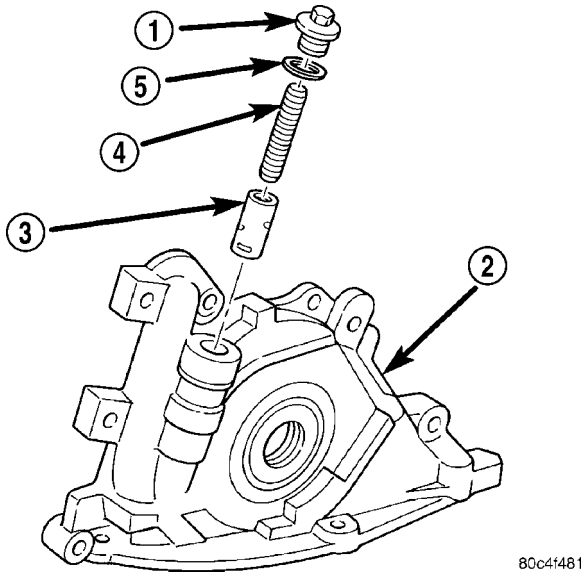

Fig. 97 Oil Pressure Relief Valve

1 - PLUG
2 - OIL PUMP BODY
3 - RELIEF VALVE
4 - SPRING
5 - SEAL

(4) Wash all parts in a suitable solvent and inspect carefully for damage or wear.

CLEANING

(1) Clean all parts thoroughly in a suitable solvent.

OIL PUMP (Continued)

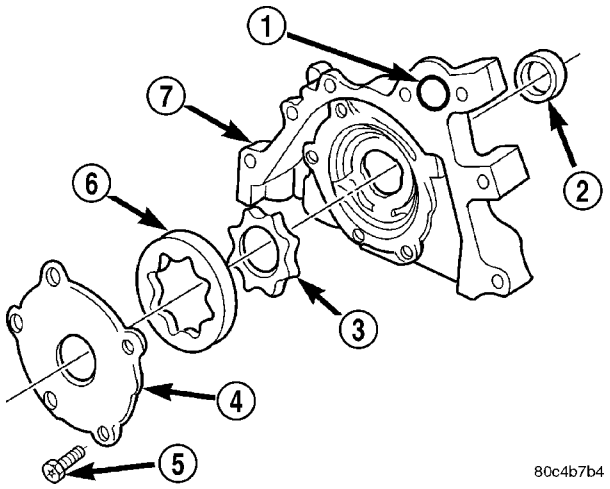

Fig. 98 Oil Pump

1 - O-RING
2 - SEAL
3 - INNER ROTOR
4 - OIL PUMP COVER
5 - FASTENER
6 - OUTER ROTOR
7 - OIL PUMP BODY

INSPECTION

(1) Inspect the mating surfaces of the oil pump cover. Surface should be smooth. Replace pump cover if scratched or grooved.

(2) Lay a straightedge across the pump cover surface (Fig. 99). If a 0.025 mm (0.001 in.) feeler gauge can be inserted between cover and straight edge, cover should be replaced.

(3) Measure thickness and diameter of outer rotor. If outer rotor thickness measures 9.40 mm (0.370 in.) or less (Fig. 100), or if the diameter is 79.95 mm (3.148 in.) or less, replace outer rotor.

(4) If inner rotor measures 9.40 mm (0.370 in.) or less replace inner rotor (Fig. 101).

ASSEMBLY

(1) Assemble pump, using new parts as required. **Install the inner rotor with chamfer facing the cast iron oil pump cover.**

(2) Prime oil pump before installation by filling rotor cavity with engine oil.

(3) Install cover and tighten fasteners to 12 N·m (105 in. lbs.) (Fig. 98).

CAUTION: Oil pump pressure relief valve must be installed as shown in (Fig. 97) or serious engine damage may occur.

(4) Install relief valve, spring, gasket and cap as shown in (Fig. 97). Tighten cap to 41 N·m (30 ft. lbs.).

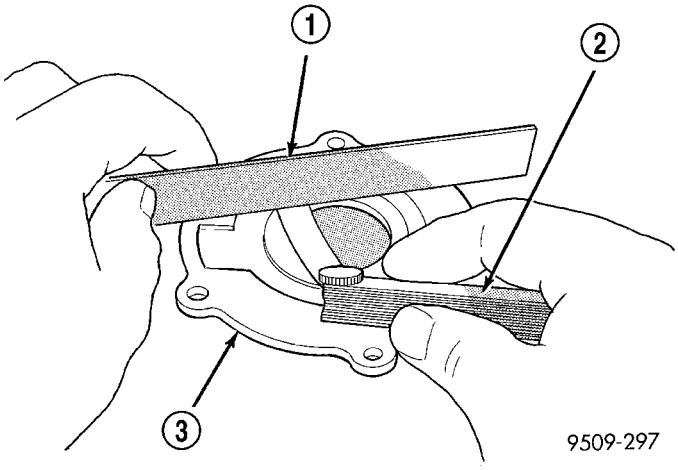

Fig. 99 Checking Oil Pump Cover Flatness

1 - STRAIGHT EDGE
2 - FEELER GAUGE
3 - OIL PUMP COVER

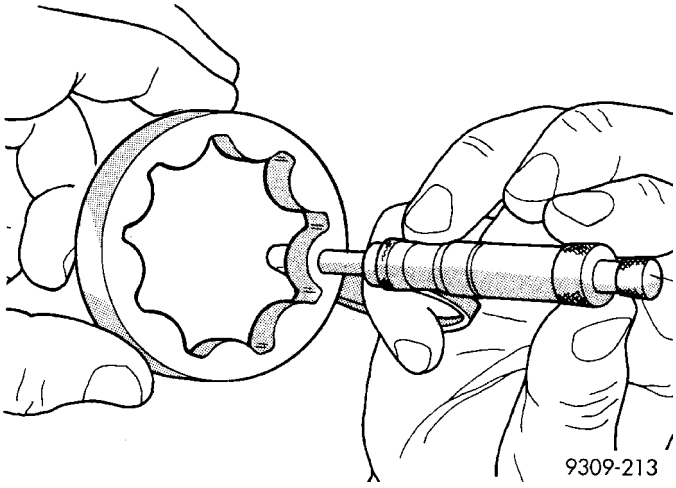

Fig. 100 Measuring Outer Rotor Thickness

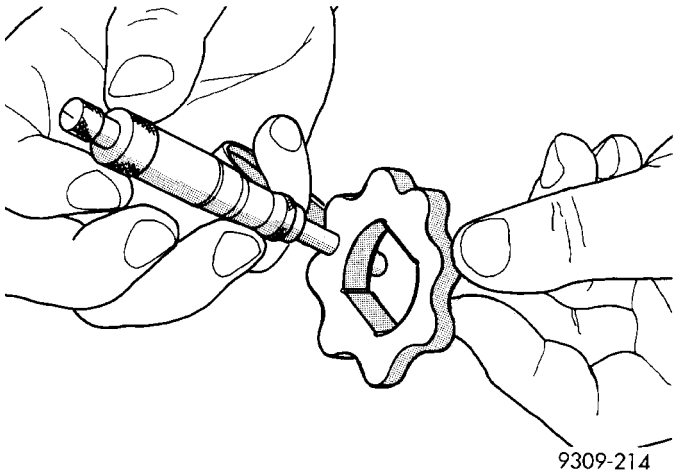

Fig. 101 Measuring Inner Rotor Thickness

OIL PUMP (Continued)

INSTALLATION

(1) Make sure all surfaces are clean and free of oil and dirt.

(2) Apply Mopar® Gasket Maker to oil pump as shown in (Fig. 102). Install O-ring into oil pump body discharge passage.

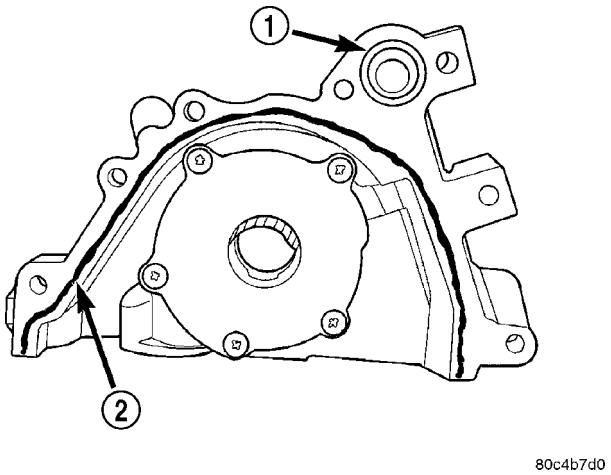

Fig. 102 Oil Pump Sealing

1 - O-RING
2 - SEALER LOCATION

(3) Prime oil pump with engine oil before installation.

(4) Align oil pump rotor flats with flats on crankshaft. Install the oil pump to the block (Fig. 96).

CAUTION: To align, the front crankshaft seal MUST be out of pump, or damage may result.

(5) Install new front crankshaft seal using Special Tool 6780 (Fig. 103).

(6) Install crankshaft key (Fig. 95).

CAUTION: The crankshaft sprocket is set to a predetermined depth from the factory for correct timing belt tracking. If removed, use of Special Tool 6792 is required to set the sprocket to original installation depth. An incorrectly installed sprocket will result in timing belt and engine damage.

(7) Install crankshaft sprocket using Special Tool 6792 (Fig. 104).

(8) Install oil pump pick-up tube.

(9) Install oil pan (Refer to 9 - ENGINE/LUBRICATION/OIL PAN - INSTALLATION).

(10) Install timing belt rear cover (Refer to 9 - ENGINE/VALVE TIMING/TIMING BELT COVER(S) - INSTALLATION).

(11) Install timing belt (Refer to 9 - ENGINE/VALVE TIMING/TIMING BELT AND SPROCKETS - INSTALLATION).

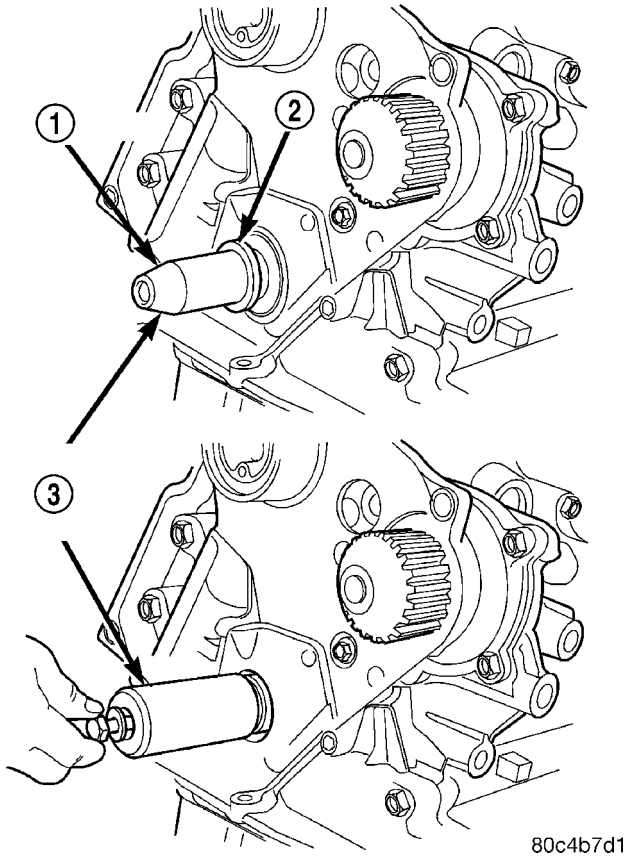

Fig. 103 Front Crankshaft Seal - Installation

1 - PROTECTOR
2 - SEAL
3 - SPECIAL TOOL 6780

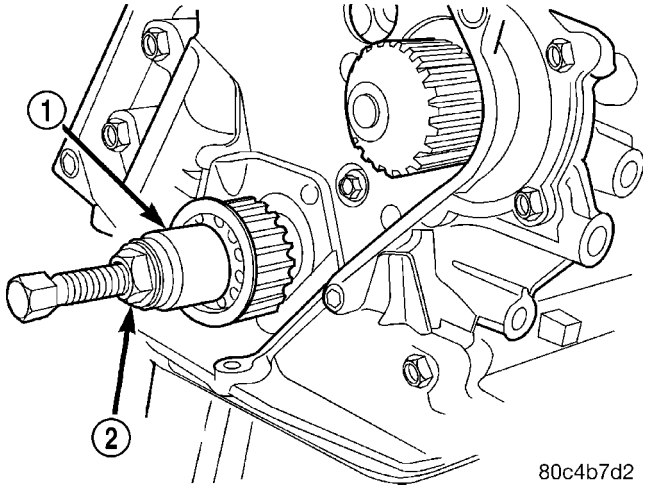

Fig. 104 Crankshaft Sprocket - Installation

1 - SPECIAL TOOL 6792
2 - TIGHTEN NUT TO INSTALL

INTAKE MANIFOLD

DESCRIPTION

The intake manifold is a two piece aluminum casting (Fig. 105) that attaches to the cylinder head with fasteners. The manifold is a long branch design to enhance low and mid-range torque

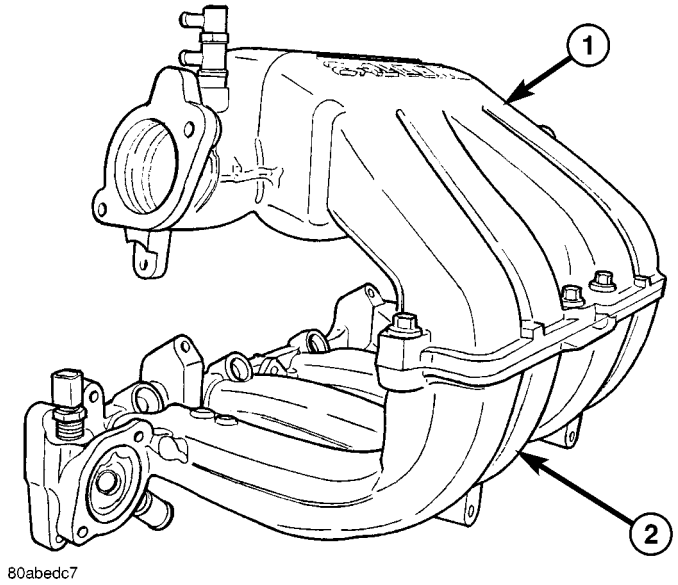

Fig. 105 Intake Manifold - Upper and Lower

1 - UPPER INTAKE MANIFOLD
2 - LOWER INTAKE MANIFOLD

DIAGNOSIS AND TESTING - INTAKE MANIFOLD LEAKS

An intake manifold air leak is characterized by lower than normal manifold vacuum. Also, one or more cylinders may not be functioning.

WARNING: USE EXTREME CAUTION WHEN THE ENGINE IS OPERATING. DO NOT STAND IN A DIRECT LINE WITH THE FAN. DO NOT PUT YOUR HANDS NEAR THE PULLEYS, BELTS OR THE FAN. DO NOT WEAR LOOSE CLOTHING.

(1) Start the engine.
(2) Spray a small stream of water (Spray Bottle) at the suspected leak area.
(3) If engine RPM'S change, the area of the suspected leak has been found.
(4) Repair as required.

INTAKE MANIFOLD - UPPER

REMOVAL

(1) Disconnect negative cable from battery.
(2) Disconnect connector from inlet air temperature sensor (Fig. 106).

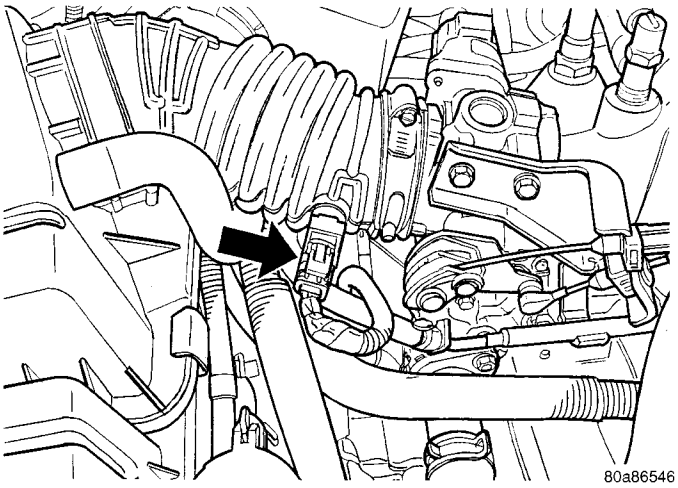

Fig. 106 Inlet Air Temperature Sensor - 2.4L

(3) Disconnect air intake tube at throttle body and remove upper air cleaner housing.
(4) Disconnect connector from throttle position sensor (TPS) (Fig. 108).
(5) Disconnect connector from idle air control (IAC) motor (Fig. 108).
(6) Disconnect connector from MAP sensor (Fig. 107).

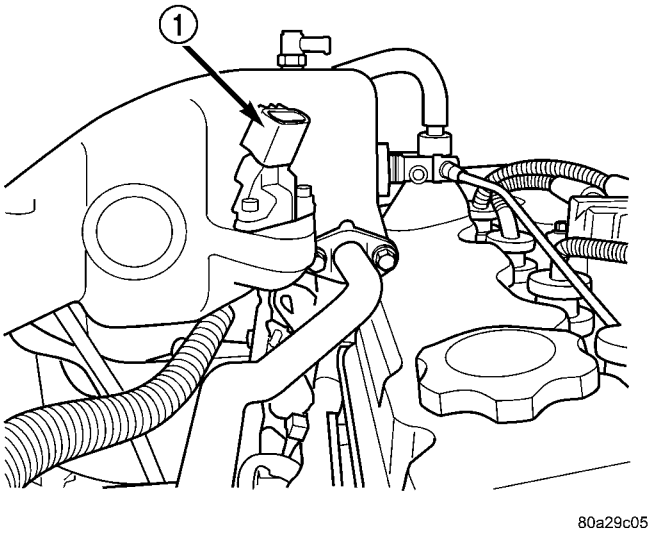

Fig. 107 Map Sensor - 2.4L

1 - MAP SENSOR

(7) Remove vacuum lines for purge solenoid and PCV valve at intake manifold.
(8) Remove vacuum lines for power brake booster, LDP, EGR transducer, and speed control vacuum reservoir (if equipped) at upper intake manifold fittings.

INTAKE MANIFOLD - UPPER (Continued)

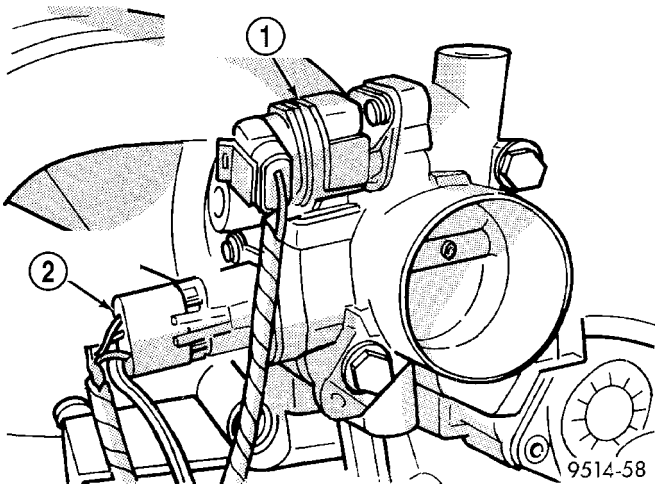

Fig. 108 Throttle Body Electrical Connectors - Typical

1 - IDLE AIR CONTROL MOTOR CONNECTOR
2 - TPS CONNECTOR

(9) Disconnect throttle and speed control (if equipped) cables from throttle lever and bracket. (Refer to 14 - FUEL SYSTEM/FUEL INJECTION/ THROTTLE CONTROL CABLE - REMOVAL)

(10) Remove the EGR tube. (Refer to 25 - EMISSIONS CONTROL/EXHAUST GAS RECIRCULATION/TUBE - REMOVAL)

(11) Remove the upper manifold support bracket bolt to manifold (Fig. 109).

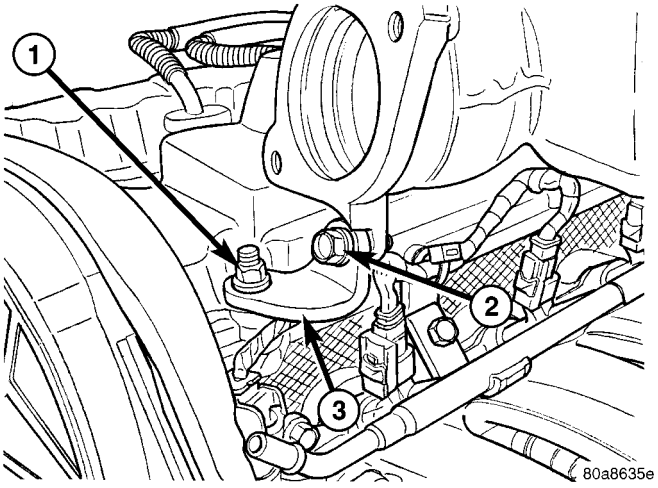

Fig. 109 Upper Intake Manifold Support Bracket

1 - NUT - BRACKET TO CYLINDER HEAD COVER
2 - BOLT - BRACKET TO UPPER INTAKE MANIFOLD
3 - UPPER INTAKE MANIFOLD SUPPORT BRACKET

(12) Remove engine oil dipstick from tube.

(13) Remove upper intake manifold bolts (Fig. 110). Remove upper intake manifold.

CAUTION: Cover intake manifold to prevent foreign material from entering engine.

INSPECTION

(1) Check manifold surfaces for flatness with straight edge. Surface must be flat within 0.15 mm per 300 mm (0.006 in. per foot) of manifold length.

(2) Inspect manifold for cracks or distortion. Replace manifold if necessary.

INSTALLATION

(1) Clean manifold sealing surfaces.

(2) Apply a 1.5 mm (0.060 in.) bead Mopar® Gasket Maker to the perimeter of the lower intake manifold runner openings.

(3) Install upper intake manifold and tighten fasteners to 28 N·m (250 in. lbs.) in sequence shown in (Fig. 110). Repeat this procedures until all fasteners are at specified torque.

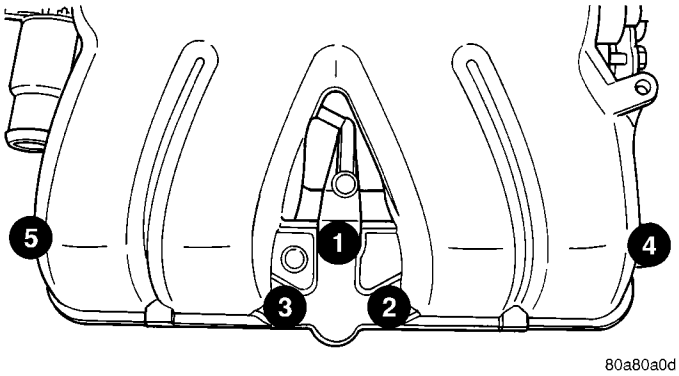

Fig. 110 Upper Intake Manifold Tightening Sequence - 2.4L

(4) Install engine oil dipstick.

(5) Install upper bolt in intake manifold to front support bracket (Fig. 109). Torque to 28 N·m (250 in. lbs.).

(6) Install EGR tube. (Refer to 25 - EMISSIONS CONTROL/EXHAUST GAS RECIRCULATION/ TUBE - INSTALLATION)

(7) Install throttle cables in bracket.

(8) Connect throttle and speed control (if equipped) cables to throttle lever.

(9) Connect vacuum lines for power brake booster, LDP, EGR transducer, and speed control vacuum reservoir (if equipped) at upper intake manifold fittings.

(10) Connect vacuum lines for purge solenoid and PCV valve.

(11) Connect electrical connectors for MAP sensor, throttle position sensor (TPS), and idle air control (IAC) motor.

(12) Install air cleaner upper housing and air intake tube to throttle body.

(13) Connect inlet air temperature sensor connector (Fig. 106).

(14) Connect negative cable to battery.

INTAKE MANIFOLD - LOWER

REMOVAL

(1) Perform fuel system pressure release procedure **before attempting any repairs.** (Refer to 14 - FUEL SYSTEM/FUEL DELIVERY - STANDARD PROCEDURE)

(2) Remove upper intake manifold. (Refer to 9 - ENGINE/MANIFOLDS/INTAKE MANIFOLD - REMOVAL)

CAUTION: Cover intake manifold openings to prevent foreign material from entering engine.

(3) Disconnect fuel line. (Refer to 14 - FUEL SYSTEM/FUEL DELIVERY/QUICK CONNECT FITTING - STANDARD PROCEDURE)

(4) Drain the cooling system. (Refer to 7 - COOLING - STANDARD PROCEDURE)

(5) Remove heater supply and radiator upper hoses at intake manifold.

(6) Disconnect coolant temperature sensor/fuel injector wire harness connector.

(7) Remove lower intake manifold support bracket upper bolts (Fig. 111).

(8) Loosen the lower intake manfold support bracket lower bolt (Fig. 111).

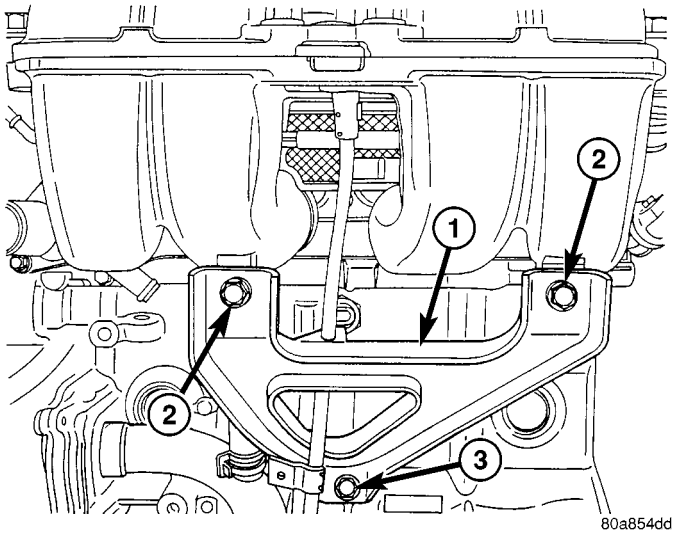

Fig. 111 Lower Intake Manifold Support Bracket

1 - SUPPORT BRACKET
2 - BOLTS - UPPER TO MANIFOLD
3 - BOLT - LOWER TO ENGINE BLOCK

(9) Disconnect fuel injector harness.

(10) Remove the bolts attaching the power steering reservoir to manifold. Set reservoir aside. **Do not** disconnect line from reservoir.

(11) Remove lower intake manifold fasteners (Fig. 112). Remove the manifold from engine.

(12) Inspect the manifold. (Refer to 9 - ENGINE/MANIFOLDS/INTAKE MANIFOLD - INSPECTION)

INSPECTION

(1) Check manifold surfaces for flatness with straight edge. Surface must be flat within 0.15 mm per 300 mm (0.006 in. per foot) of manifold length.

(2) Inspect manifold for cracks or distortion. Replace manifold if necessary.

INSTALLATION

If the following items were removed, install and torque to specifications:

- Fuel rail bolts - 22 N·m (200 in. lbs.)
- Coolant outlet connector bolts - 28 N·m (250 in. lbs.)
- Coolant temperature sensor - 7 N·m (60 in. lbs.)

(1) Position a new gasket on cylinder head and install lower manifold.

(2) Install and tighten intake manifold fasteners to 28 N·m (250 in. lbs.) in the sequence shown in (Fig. 112). Repeat procedure until all bolts are at specified torque.

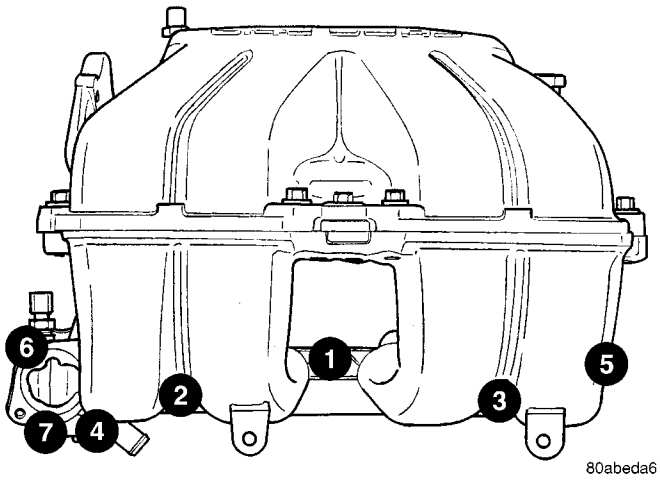

Fig. 112 Lower Intake Manifold Tightening Sequence

(3) Install lower intake manifold support bracket bolts (Fig. 111) and tighten to:

- Bolts to intake 28 N·m (250 in. lbs.)
- Bolt to engine block 54 N·m (40 ft. lbs.)

(4) Position power steering reservoir on manifold and install bolts.

(5) Connect the fuel line. (Refer to 14 - FUEL SYSTEM/FUEL DELIVERY/QUICK CONNECT FITTING - STANDARD PROCEDURE)

(6) Connect coolant temperature sensor/fuel injector wiring harness electrical connector.

(7) Install the radiator upper and heater supply hoses.

INTAKE MANIFOLD - LOWER (Continued)

(8) Install the upper intake manifold. (Refer to 9 - ENGINE/MANIFOLDS/INTAKE MANIFOLD - INSTALLATION)

(9) Fill the cooling system. (Refer to 7 - COOLING - STANDARD PROCEDURE)

EXHAUST MANIFOLD

REMOVAL

(1) Raise vehicle and disconnect exhaust pipe from the exhaust manifold.

(2) Disconnect upstream oxygen sensor connector at the rear of exhaust manifold.

(3) Remove the bolts attaching the manifold to the cylinder head.

(4) Remove exhaust manifold.

(5) Inspect the manifold. (Refer to 9 - ENGINE/MANIFOLDS/EXHAUST MANIFOLD - INSPECTION)

CLEANING

(1) Discard gasket (if equipped) and clean all surfaces of manifold and cylinder head.

INSPECTION

(1) Inspect manifold gasket surfaces for flatness with straight edge. Surface must be flat within 0.15 mm per 300 mm (0.006 in. per foot) of manifold length.

(2) Inspect manifolds for cracks or distortion. Replace manifold as necessary.

INSTALLATION

(1) Install exhaust manifold with a new gasket. Tighten attaching nuts in the sequence shown in (Fig. 113) to 19 N·m (170 in. lbs.).

(2) Attach exhaust pipe to exhaust manifold and tighten fasteners to 37 N·m (27 ft. lbs.).

(3) Install and connect the oxygen sensor. (Refer to 14 - FUEL SYSTEM/FUEL INJECTION/O2 SENSOR - COMPONENT LOCATION)

TIMING BELT COVER(S)

REMOVAL

FRONT COVER - UPPER

(1) Remove upper timing belt cover fasteners (Fig. 114) and remove cover.

FRONT COVER - LOWER

(1) Remove crankshaft vibration damper (Refer to 9 - ENGINE/ENGINE BLOCK/VIBRATION DAMPER - REMOVAL).

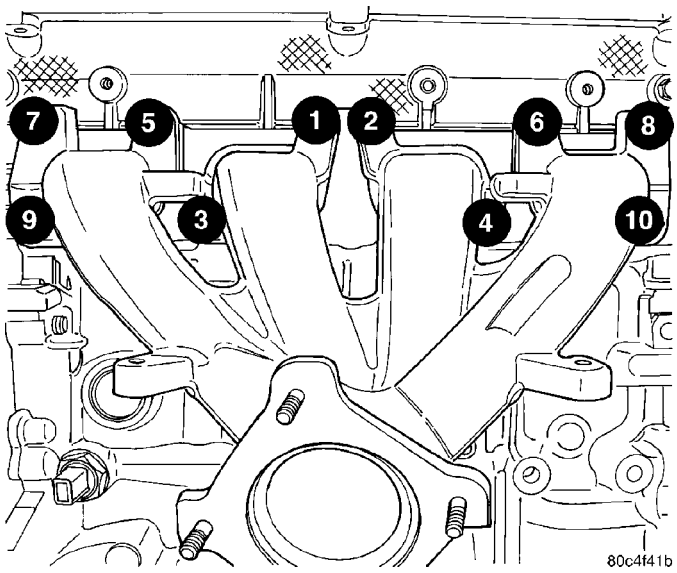

Fig. 113 Exhaust Manifold Tightening Sequence

(2) Remove generator drive belt tensioner assembly (Refer to 7 - COOLING/ACCESSORY DRIVE/BELT TENSIONERS - REMOVAL).

(3) Remove timing belt front cover bolts (Fig. 114) and remove covers.

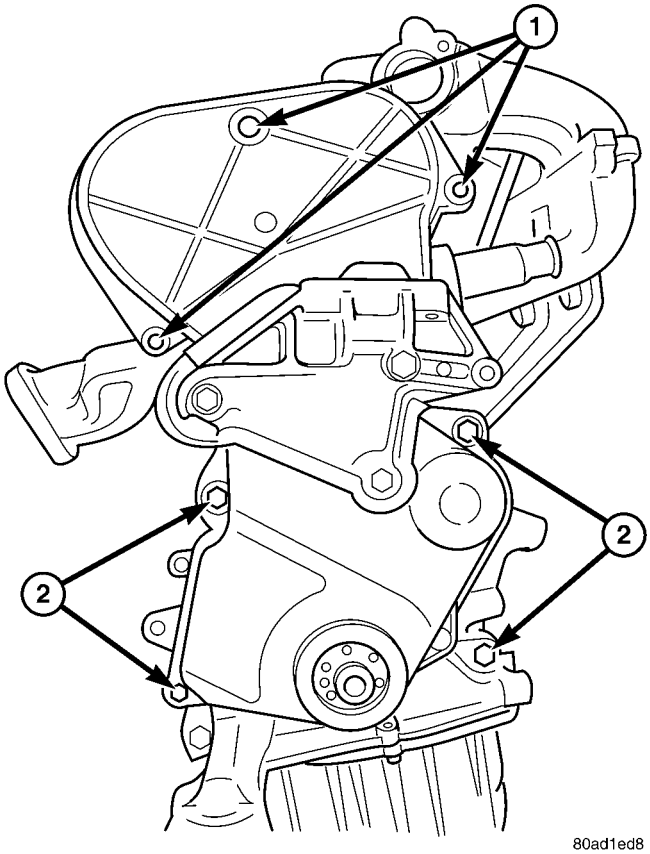

Fig. 114 Front Timing Belt Covers

1 - BOLTS - UPPER FRONT COVER 6 N·m (50 in. lbs.)
2 - BOLTS - LOWER FRONT COVER 6 N·m (50 in. lbs.)

TIMING BELT COVER(S) (Continued)

REAR COVER

(1) Remove front covers.
(2) Remove engine mount bracket (Fig. 115).

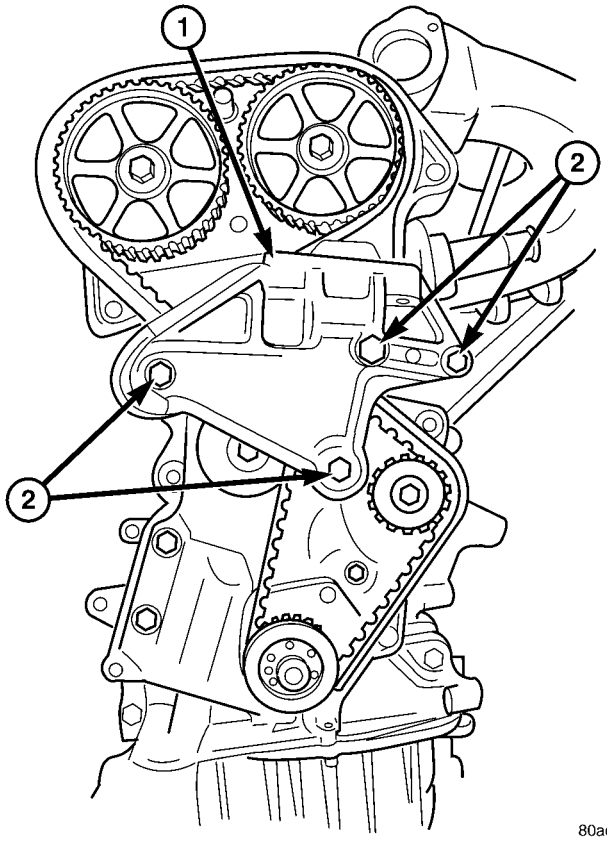

Fig. 115 Engine Mount Bracket

1 - ENGINE MOUNT BRACKET
2 - BOLTS - 61 N·m (45 ft. lbs.)

(3) Remove timing belt (Refer to 9 - ENGINE/ VALVE TIMING/TIMING BELT AND SPROCKETS - REMOVAL).
(4) Remove camshaft sprockets. Hold camshaft sprocket with Special Tool 6847 while removing center bolt (Fig. 116).
(5) Remove timing belt idler pulley (Fig. 117).
(6) Remove rear cover fasteners and remove cover from engine (Fig. 118).

INSTALLATION

FRONT COVER - UPPER

(1) Install timing belt cover. Torque fasteners to 6 N·m (50 in. lbs.) (Fig. 114).

FRONT COVER - LOWER

(1) Install timing belt front covers (Fig. 114). Tighten fasteners to 6 N·m (50 in. lbs.).

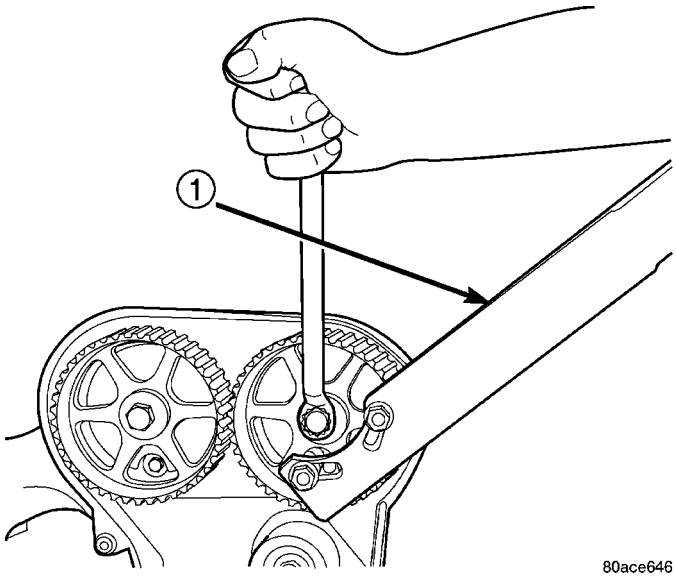

Fig. 116 Camshaft Sprocket - Removal/Installation

1 - SPECIAL TOOL 6847

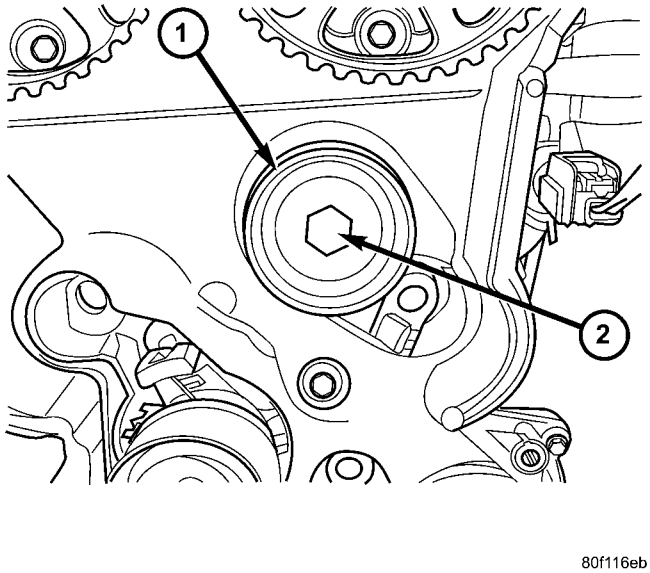

Fig. 117 Timing Belt Idler Pulley

1 - IDLER PULLEY
2 - BOLT

(2) Install generator drive belt tensioner (Refer to 7 - COOLING/ACCESSORY DRIVE/BELT TENSIONERS - INSTALLATION).
(3) Install crankshaft vibration damper (Refer to 9 - ENGINE/ENGINE BLOCK/VIBRATION DAMPER - INSTALLATION).

TIMING BELT COVER(S) (Continued)

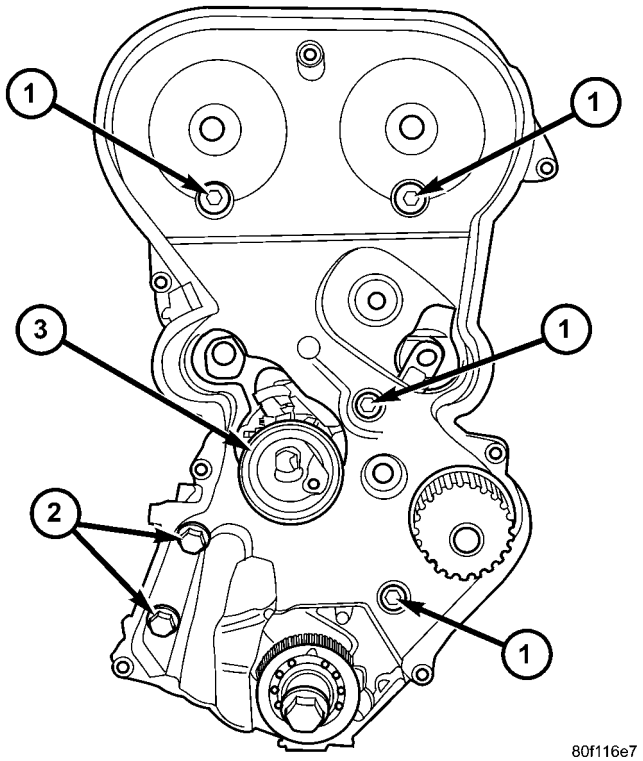

Fig. 118 Rear Timing Belt Cover Fasteners

1 - M6 BOLTS - 12 N·m (105 in. lbs.)
2 - M8 BOLTS - 28 N·m (250 in. lbs.)
3 - TIMING BELT TENSIONER

REAR COVER

(1) Install rear timing belt cover and fasteners. Torque fasteners to specified values (Fig. 118).

CAUTION: Do not use an impact wrench for tightening camshaft sprocket bolt. Damage to the timing locating pin can occur. Hand tighten using a wrench ONLY.

(2) Install camshaft sprockets. Hold sprockets with Special Tool 6848 and tighten center bolt to 101 N·m (75 ft. lbs.) (Fig. 116).

(3) Install timing belt idler pulley and tighten mounting bolt to 61 N·m (45 ft. lbs.) (Fig. 117).

(4) Install timing belt (Refer to 9 - ENGINE/VALVE TIMING/TIMING BELT AND SPROCKETS - INSTALLATION).

(5) Install engine mount bracket and tighten bolts to 61 N·m (45 ft. lbs.) (Fig. 115).

(6) Install front covers.

TIMING BELT AND SPROCKET(S)

REMOVAL

REMOVAL - TIMING BELT

(1) Remove air cleaner upper cover, housing, and clean air tube.

(2) Remove make-up air hose from cylinder head cover.

(3) Raise vehicle on hoist.

(4) Remove right front wheel.

(5) Remove right inner splash shield.

(6) Remove accessory drive belts (Refer to 7 - COOLING/ACCESSORY DRIVE/DRIVE BELTS - REMOVAL).

(7) Remove crankshaft vibration damper (Refer to 9 - ENGINE/ENGINE BLOCK/VIBRATION DAMPER - REMOVAL).

(8) Remove air conditioner/generator belt tensioner and pulley assembly (Refer to 7 - COOLING/ACCESSORY DRIVE/BELT TENSIONERS - REMOVAL).

(9) Remove timing belt lower front cover bolts and remove cover (Refer to 9 - ENGINE/VALVE TIMING/TIMING BELT COVER(S) - REMOVAL).

(10) Lower vehicle.

(11) Remove bolts attaching timing belt upper front cover and remove cover (Refer to 9 - ENGINE/VALVE TIMING/TIMING BELT COVER(S) - REMOVAL).

(12) Remove right engine mount (Refer to 9 - ENGINE/ENGINE MOUNTING/RIGHT MOUNT - REMOVAL).

(13) Remove engine mount bracket (Fig. 119).

CAUTION: When aligning crankshaft and camshaft timing marks always rotate engine from crankshaft. Camshaft should not be rotated after timing belt is removed. Damage to valve components may occur. Always align timing marks before removing timing belt.

(14) Before the removal of the timing belt, rotate crankshaft until the TDC mark on oil pump housing aligns with the TDC mark on crankshaft sprocket (trailing edge of sprocket tooth) (Fig. 120).

NOTE: The crankshaft sprocket TDC mark is located on the trailing edge of the sprocket tooth. Failure to align trailing edge of sprocket tooth to TDC mark on oil pump housing will cause the camshaft timing marks to be misaligned.

(15) Loosen timing belt tensioner lock bolt (Fig. 121).

TIMING BELT AND SPROCKET(S) (Continued)

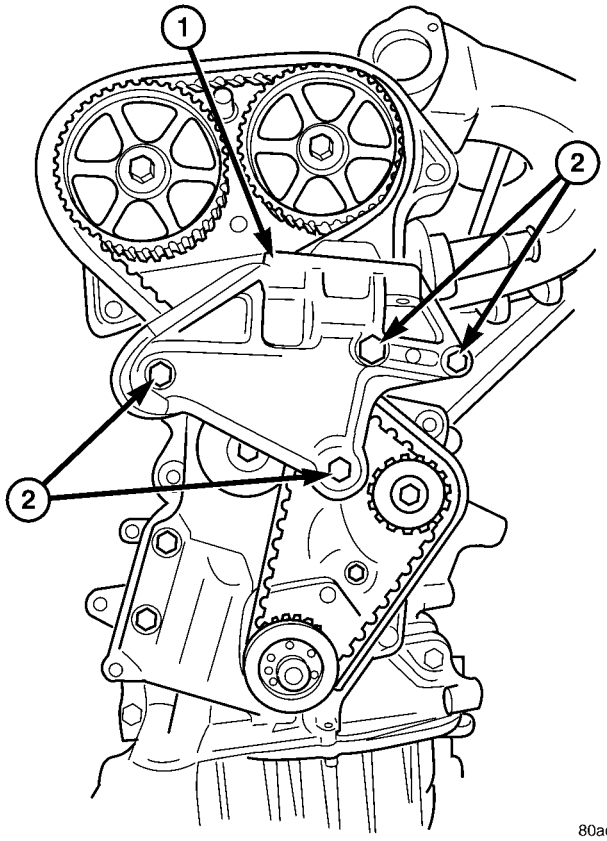

Fig. 119 Engine Mount Bracket

1 - ENGINE MOUNT BRACKET
2 - BOLTS - 61 N·m (45 ft. lbs.)

(16) Insert a 6 mm Allen wrench into the hexagon opening located on the top plate of the belt tensioner pulley (Fig. 121). Rotate the top plate **CLOCKWISE** until there is enough slack in timing belt to allow for removal.

(17) Remove timing belt.

CAUTION: If timing belt was damaged due to incorrect tracking (alignment), the belt tensioner pulley and bracket must be replaced as an assembly (Refer to 9 - ENGINE/VALVE TIMING/TIMING BELT TENSIONER & PULLEY - REMOVAL).

REMOVAL - CAMSHAFT SPROCKETS

(1) Disconnect negative battery cable.

(2) Remove timing belt (Refer to 9 - ENGINE/VALVE TIMING/TIMING BELT AND SPROCKETS - REMOVAL).

(3) Hold camshaft sprockets with Special Tool 6847 while removing center bolts (Fig. 122).

REMOVAL - CRANKSHAFT SPROCKET

(1) Disconnect negative battery cable.

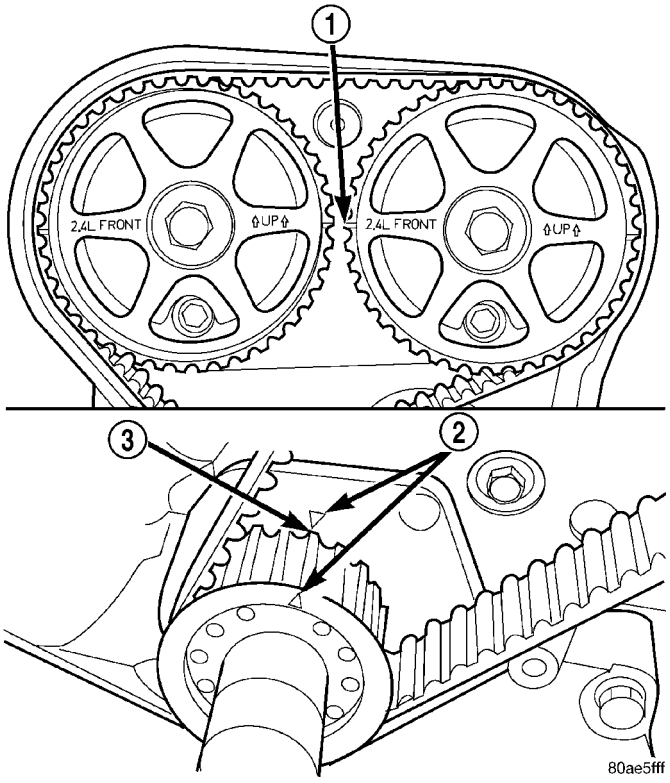

Fig. 120 Crankshaft and Camshaft Timing

1 - CAMSHAFT TIMING MARKS
2 - CRANKSHAFT TDC MARKS
3 - TRAILING EDGE OF SPROCKET TOOTH

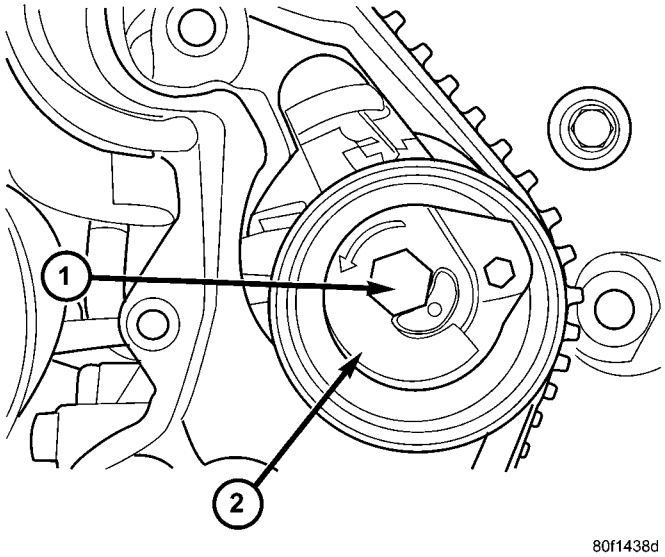

Fig. 121 Timing Belt Tensioner

1 - LOCK BOLT
2 - TOP PLATE

(2) Remove timing belt (Refer to 9 - ENGINE/VALVE TIMING/TIMING BELT AND SPROCKETS - REMOVAL).

TIMING BELT AND SPROCKET(S) (Continued)

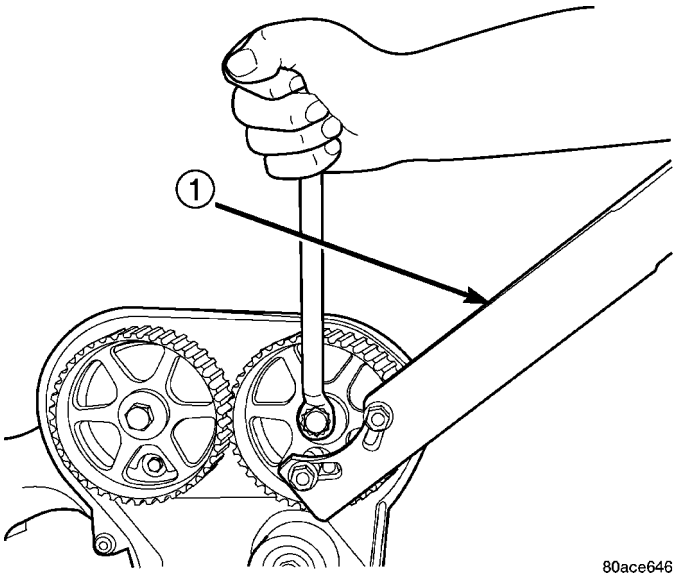

Fig. 122 Camshaft Sprocket - Removal/Installation

1 - SPECIAL TOOL 6847

(3) Remove crankshaft sprocket using Special Tools 6793 and insert C-4685-C2 (Fig. 123).

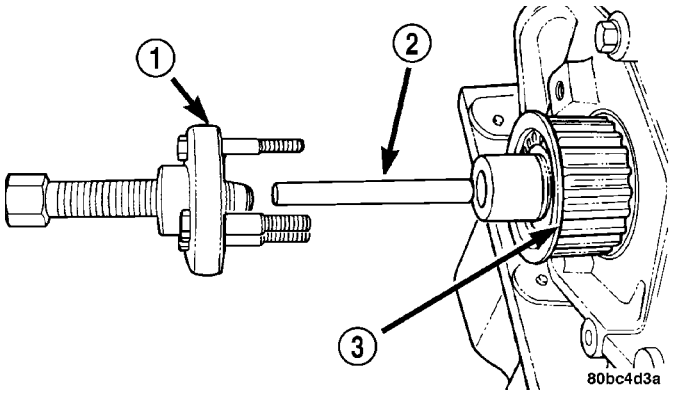

Fig. 123 Crankshaft Sprocket - Removal

1 - SPECIAL TOOL 6793
2 - SPECIAL TOOL C-4685–C2
3 - CRANKSHAFT SPROCKET

CLEANING

Do Not attempt to clean a timing belt. If contamination from oil, grease, or coolants have occurred, the timing belt should be replaced.

Clean all sprockets using a suitable solvent. Clean all sprocket grooves of any debris.

INSTALLATION

INSTALLATION - CRANKSHAFT SPROCKET

CAUTION: The crankshaft sprocket is set to a predetermined depth from the factory for correct timing belt tracking. If removed, use of Special Tool 6792 is required to set the sprocket to original installation depth. An incorrectly installed sprocket will result in timing belt and engine damage.

(1) Install crankshaft sprocket using Special Tool 6792 (Fig. 124).

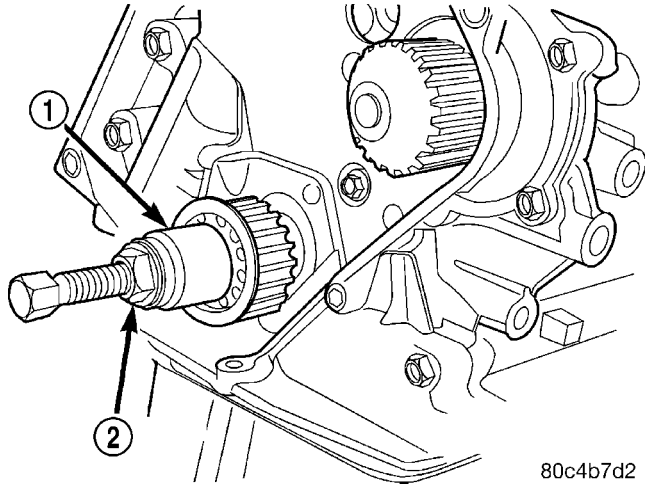

Fig. 124 Crankshaft Sprocket - Installation

1 - SPECIAL TOOL 6792
2 - TIGHTEN NUT TO INSTALL

(2) Install timing belt. (Refer to 9 - ENGINE/ VALVE TIMING/TIMING BELT/CHAIN AND SPROCKETS - INSTALLATION)

INSTALLATION - CAMSHAFT SPROCKETS

(1) Install camshaft sprockets. Hold camshaft sprockets with Special Tool 6847 while tightening center bolts to 115 N·m (85 ft. lbs.) (Fig. 122).

(2) Install timing belt (Refer to 9 - ENGINE/ VALVE TIMING/TIMING BELT AND SPROCKETS - INSTALLATION).

(3) Connect negative battery cable.

INSTALLATION - TIMING BELT

(1) Set crankshaft sprocket to TDC by aligning the sprocket with the arrow on the oil pump housing.

(2) Set camshafts timing marks so that the exhaust camshaft sprocket is a 1/2 notch below the intake camshaft sprocket (Fig. 125).

CAUTION: Ensure that the arrows on both camshaft sprockets are facing up.

(3) Install timing belt. Starting at the crankshaft, go around the water pump sprocket, idler pulley, camshaft sprockets and then around the tensioner (Fig. 126).

(4) Move the exhaust camshaft sprocket counterclockwise (Fig. 126) to align marks and take up belt slack.

TIMING BELT AND SPROCKET(S) (Continued)

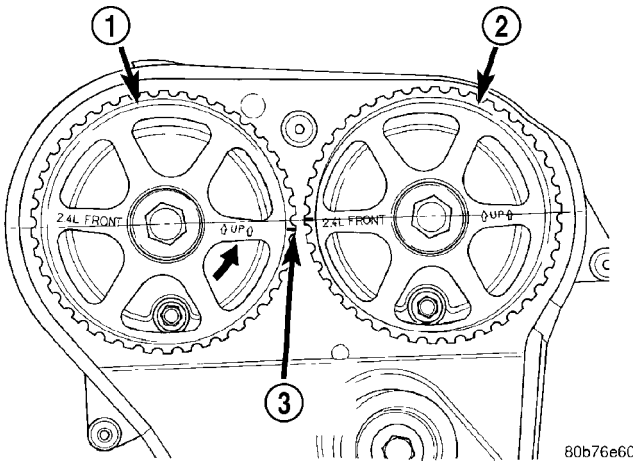

Fig. 125 Camshaft Sprocket Alignment

1 - CAMSHAFT SPROCKET-EXHAUST
2 - CAMSHAFT SPROCKET-INTAKE
3 - 1/2 NOTCH LOCATION

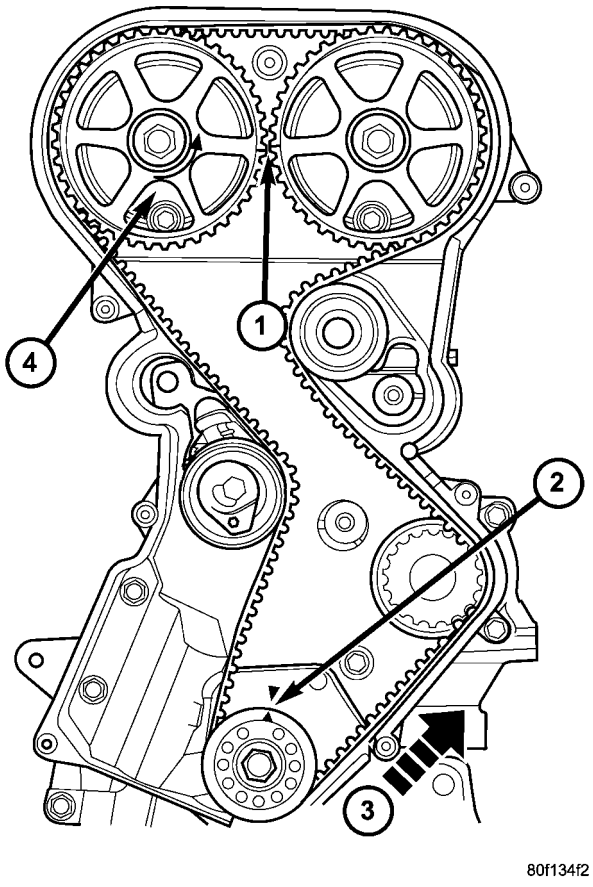

Fig. 126 Timing Belt Installation

1 - CAMSHAFT TIMING MARKS 1/2 NOTCH LOCATION
2 - CRANKSHAFT AT TDC
3 - INSTALL BELT IN THIS DIRECTION
4 - ROTATE CAMSHAFT SPROCKET TO TAKE UP BELT SLACK

(5) Insert a 6 mm Allen wrench into the hexagon opening located on the top plate of the belt tensioner pulley. Rotate the top plate **COUNTERCLOCKWISE**. The tensioner pulley will move against the belt and the tensioner setting notch will eventually start to move clockwise. Watching the movement of the setting notch, continue rotating the top plate counterclockwise until the setting notch is aligned with the spring tang (Fig. 127). Using the allen wrench to prevent the top plate from moving, torque the tensioner lock bolt to 25 N·m (220 in. lbs.). Setting notch and spring tang should remain aligned after lock nut is torqued.

(6) Remove allen wrench and torque wrench.

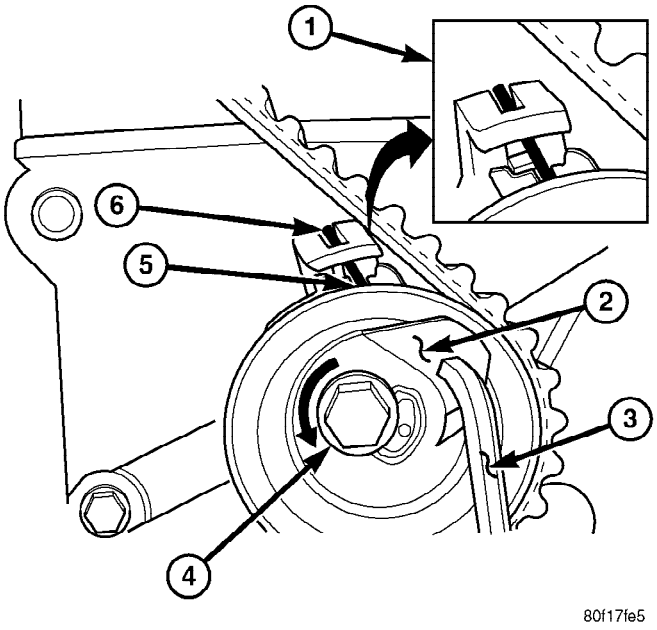

Fig. 127 Timing Belt Tension Adjustment

1 - ALIGN SETTING NOTCH WITH SPRING TANG
2 - TOP PLATE
3 - 6mm ALLEN WRENCH
4 - LOCK BOLT
5 - SETTING NOTCH
6 - SPRING TANG

NOTE: Repositioning the crankshaft to the TDC position must be done only during the CLOCKWISE rotation movement. If TDC is missed, rotate a further two revolutions until TDC is achieved. DO NOT rotate crankshaft counterclockwise as this will make verification of proper tensioner setting impossible.

TIMING BELT AND SPROCKET(S) (Continued)

(7) Rotate the crankshaft CLOCKWISE two complete revolutions manually for seating of the belt, until the crankshaft is repositioned at the TDC position. Verify that the camshaft and crankshaft timing marks are in proper position (Fig. 128).

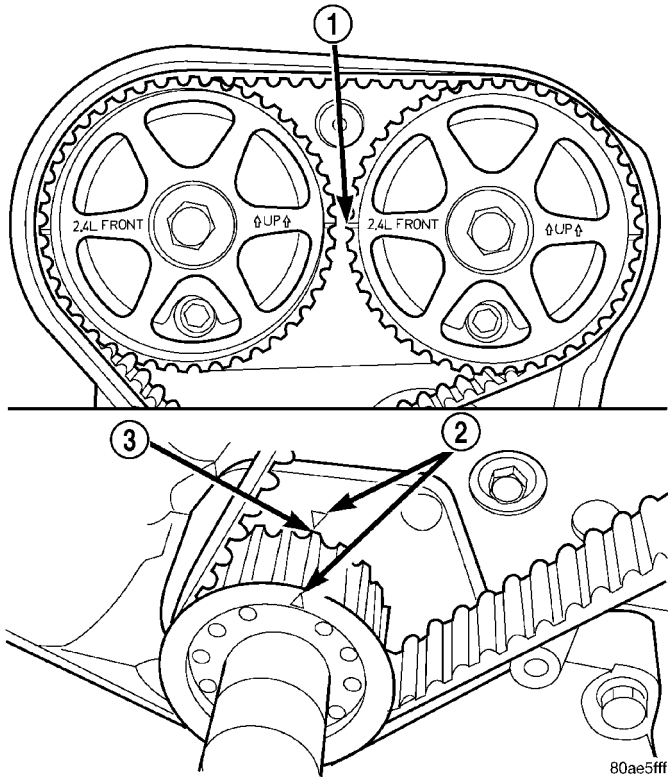

Fig. 128 Crankshaft and Camshaft Timing

1 - CAMSHAFT TIMING MARKS
2 - CRANKSHAFT TDC MARKS
3 - TRAILING EDGE OF SPROCKET TOOTH

(8) Check if the spring tang is within the tolerance window (Fig. 129). If the spring tang is within the tolerance window, the installation process is complete and nothing further is required. If the spring tang is not within the tolerance window, repeat Steps 5 through 7.

(9) Install engine mount bracket to engine (Fig. 119).

(10) Install timing belt front covers and bolts (Refer to 9 - ENGINE/VALVE TIMING/TIMING BELT COVER(S) - INSTALLATION).

(11) Install air conditioning/generator belt tensioner and pulley (Refer to 7 - COOLING/ACCESSORY DRIVE/BELT TENSIONERS - INSTALLATION).

(12) Install right engine mount (Refer to 9 - ENGINE/ENGINE MOUNTING/RIGHT MOUNT - INSTALLATION).

(13) Install crankshaft vibration damper (Refer to 9 - ENGINE/ENGINE BLOCK/VIBRATION DAMPER - INSTALLATION).

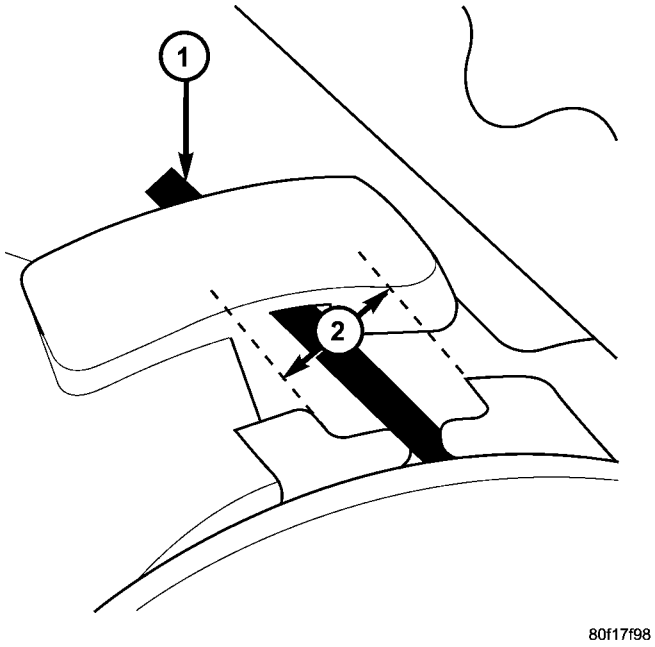

Fig. 129 Timing Belt Tension Verification

1 - SPRING TANG
2 - TOLERANCE WINDOW

(14) Install accessory drive belts (Refer to 7 - COOLING/ACCESSORY DRIVE/DRIVE BELTS - INSTALLATION).

(15) Install drive belt splash shield.

(16) Install right front wheel.

(17) Connect make-up air hose to cylinder head cover.

(18) Install air cleaner housing, upper cover, and clean air tube.

TIMING BELT TENSIONER & PULLEY

REMOVAL

(1) Remove the timing belt (Refer to 9 - ENGINE/VALVE TIMING/TIMING BELT AND SPROCKETS - REMOVAL).

(2) Remove timing belt idler pulley (Fig. 130).

(3) Hold camshaft sprocket with Special Tool 6847 while removing bolt (Fig. 131). Remove both cam sprockets.

(4) Remove rear timing belt cover fasteners and remove cover from engine (Fig. 132).

(5) Remove lower bolt attaching timing belt tensioner assembly to engine and remove tensioner **as an assembly** (Fig. 133).

TIMING BELT TENSIONER & PULLEY (Continued)

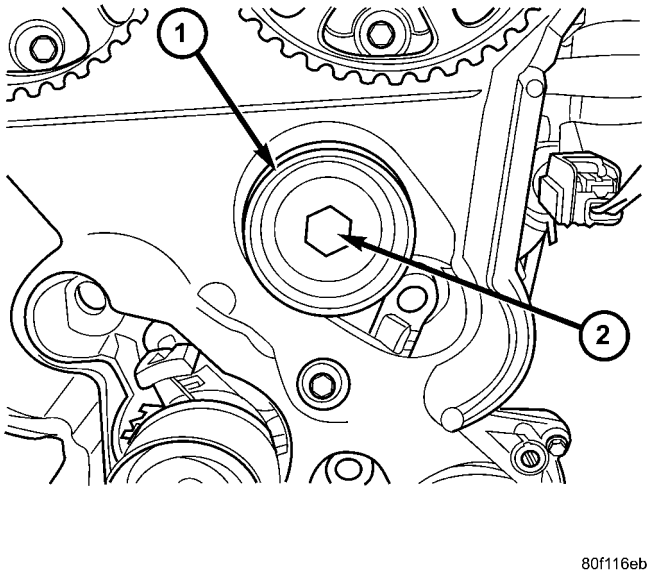

Fig. 130 Timing Belt Idler Pulley

1 - IDLER PULLEY
2 - BOLT

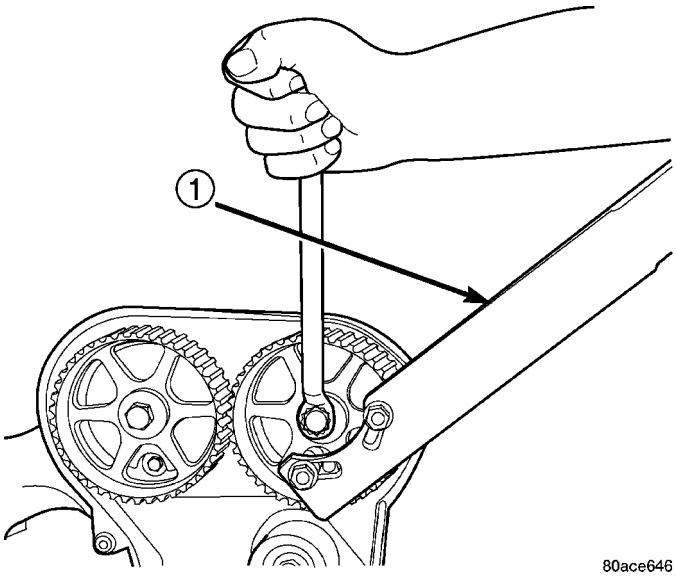

Fig. 131 Camshaft Sprocket - Removal/Installation

1 - SPECIAL TOOL 6847

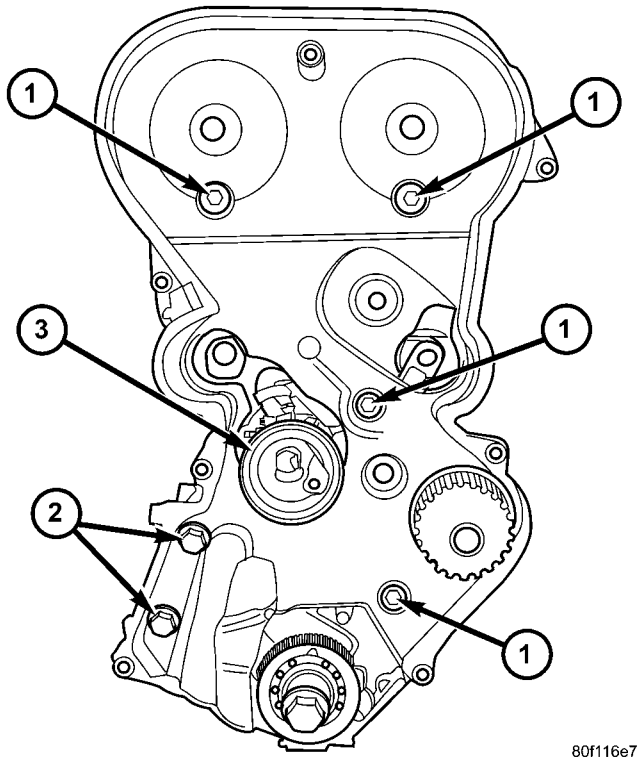

Fig. 132 Rear Timing Belt Cover Fasteners

1 - M6 BOLTS - 12 N·m (105 in. lbs.)
2 - M8 BOLTS - 28 N·m (250 in. lbs.)
3 - TIMING BELT TENSIONER

INSTALLATION

(1) Align timing belt tensioner assembly to engine and install lower mounting bolt **but do not tighten** (Fig. 133). To properly align tensioner assembly—install one of the engine bracket mounting bolts (M10) 5 to 7 turns into the tensioner's upper mounting location (Fig. 133).

(2) Torque the tensioner's lower mounting bolt to 61 N·m (45 ft. lbs.). Remove the upper bolt used for tensioner alignment.

(3) Install rear timing belt cover and fasteners. Torque fasteners to values specified in (Fig. 132).

(4) Install timing belt idler pulley and torque mounting bolt to 61 N·m (45 ft. lbs.) (Fig. 130).

(5) Install camshaft sprockets. Use Special Tool 6847 to hold sprockets (Fig. 131), torque bolts to 101 N·m (75 ft. lbs.).

(6) Install the timing belt (Refer to 9 - ENGINE/ VALVE TIMING/TIMING BELT AND SPROCKETS - INSTALLATION).

TIMING BELT TENSIONER & PULLEY (Continued)

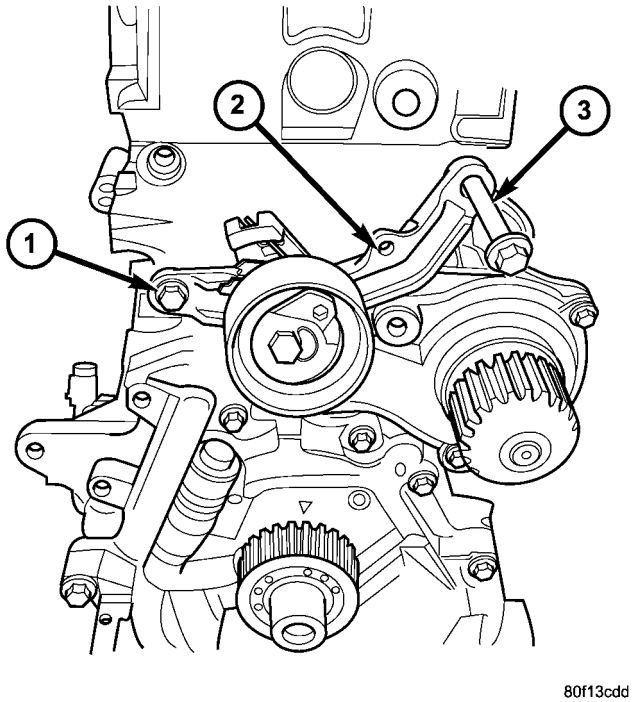

Fig. 133 Timing Belt Tensioner/Bracket Assembly

1 - BOLT
2 - TENSIONER ASSEMBLY
3 - BOLT-INSTALL FOR PROPER ALIGNMENT

BALANCE SHAFTS AND CARRIER ASSEMBLY

DESCRIPTION

The 2.4L engine is equipped with two nodular cast iron balance shafts installed in a cast aluminum carrier attached to the lower cylinder block (Fig. 134).

OPERATION

The balance shafts are driven by the crankshaft via a roller chain and sprockets. The balance shafts are connected by helical gears. The dual counter rotating shafts decrease second order vertical shaking forces caused by component movement.

REMOVAL

BALANCE SHAFTS/CHAIN/SPROCKETS

NOTE: For service procedures requiring only temporary relocation of carrier assembly refer to BALANCE SHAFT CARRIER procedure below.

(1) Drain engine oil.
(2) Remove the oil pan and pick-up tube (Refer to 9 - ENGINE/LUBRICATION/OIL PAN - REMOVAL).
(3) If replacing crankshaft sprocket, remove oil pump (Refer to 9 - ENGINE/LUBRICATION/OIL PUMP - REMOVAL).
(4) Remove chain cover, guide and tensioner. Discard pivot screw and adjuster screw. (Fig. 135).
(5) Remove screw retaining balance shaft drive sprocket (Fig. 136). Remove chain and sprocket.
(6) Using two wide pry bars, work the crankshaft sprocket back and forth until it is off the crankshaftshaft.
(7) Remove gear cover retaining stud (double ended to also retain chain guide). Remove cover and balance shaft gears (Fig. 137).
(8) Remove rear cover and balance shafts (Fig. 138).
(9) Remove four carrier to crankcase attaching bolts to separate carrier from engine bedplate.

BALANCE SHAFT CARRIER

The following components will remain intact during carrier removal: Gear cover, gears, balance shafts and the rear cover (Fig. 134).
(1) Drain engine oil.
(2) Remove the oil pan and pick-up tube (Refer to 9 - ENGINE/LUBRICATION/OIL PAN - REMOVAL).
(3) Remove chain cover, guide and tensioner (Fig. 135).
(4) Remove screw retaining balance shaft drive sprocket (Fig. 136).
(5) Move balance shaft inboard through drive chain sprocket. Sprocket will hang in lower chain loop.
(6) Remove carrier to crankcase attaching bolts to remove carrier.

BALANCE SHAFTS AND CARRIER ASSEMBLY (Continued)

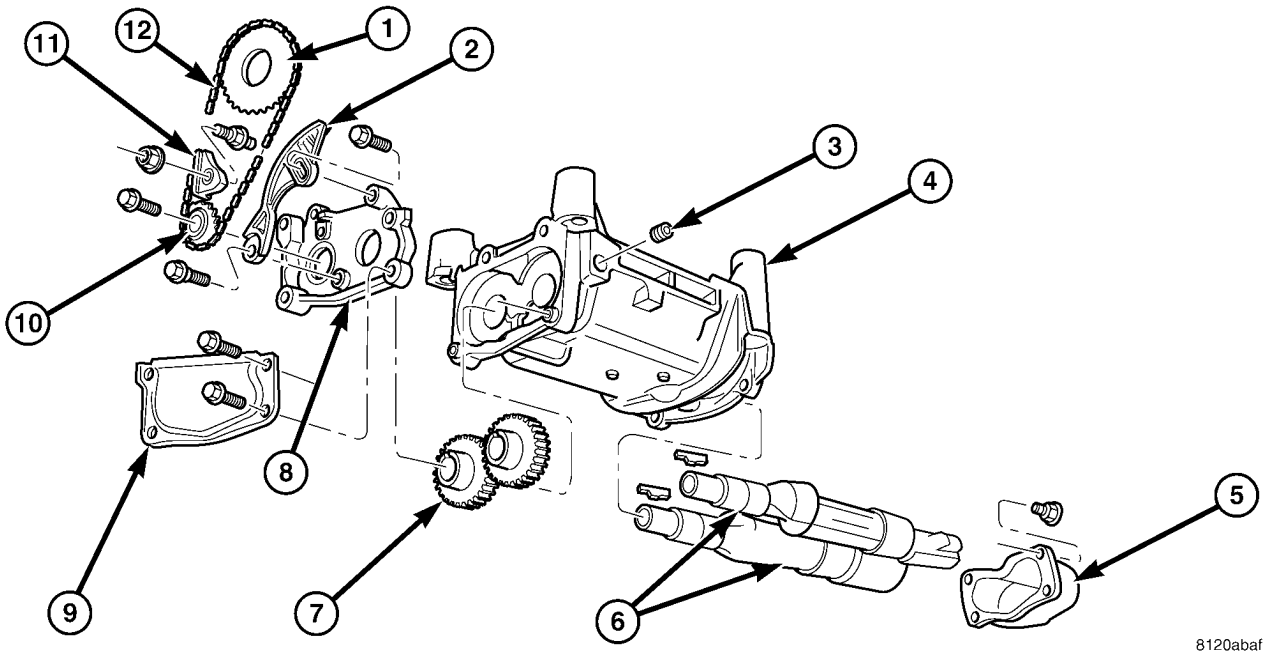

Fig. 134 Balance Shafts and Carrier Assembly

1 - SPROCKET
2 - TENSIONER
3 - PLUG
4 - CARRIER
5 - REAR COVER
6 - BALANCE SHAFTS
7 - GEARS
8 - GEAR COVER
9 - CHAIN COVER
10 - SPROCKET
11 - GUIDE
12 - CHAIN

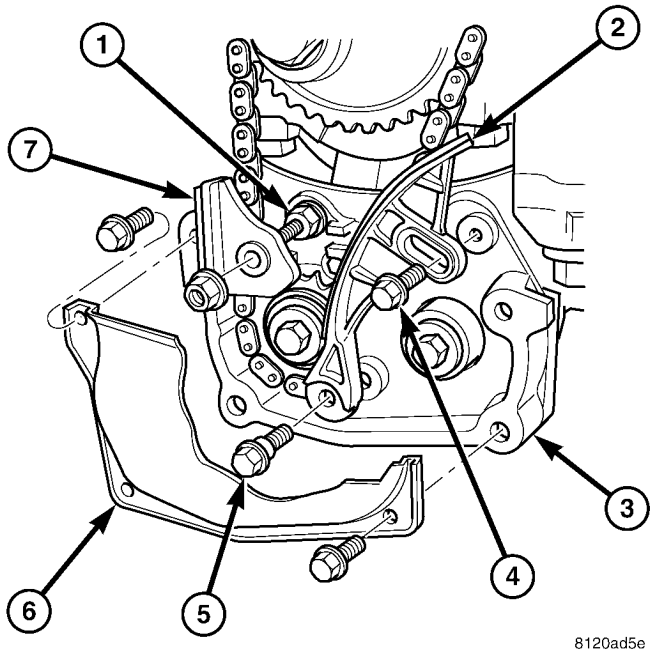

Fig. 135 Chain Cover, Guide and Tensioner

1 - STUD
2 - TENSIONER (ADJUSTER)
3 - GEAR COVER
4 - ADJUSTER SCREW
5 - SHOULDERED PIVOT SCREW
6 - CHAIN COVER (CUTAWAY)
7 - GUIDE

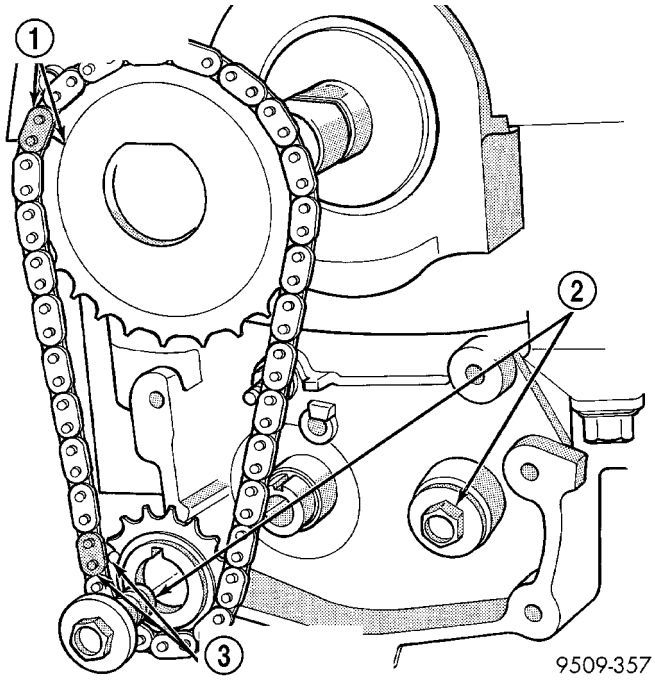

Fig. 136 Drive Chain and Sprockets

1 - NICKEL PLATED LINK AND MARK
2 - GEAR/SPROCKET SCREWS
3 - NICKEL PLATED LINK AND DOT

BALANCE SHAFTS AND CARRIER ASSEMBLY (Continued)

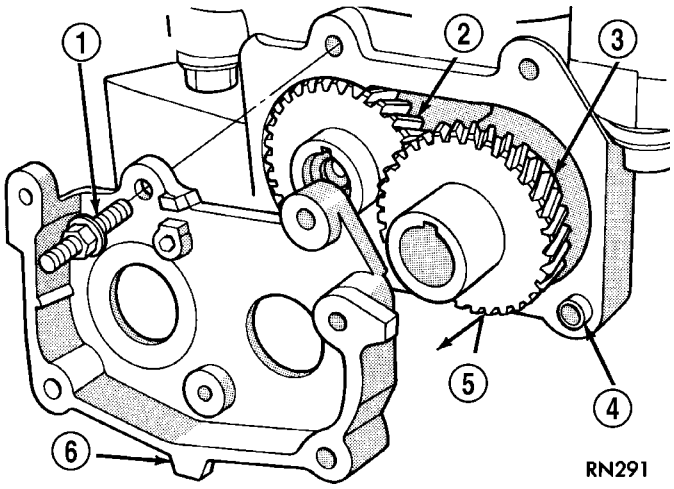

Fig. 137 Gear Cover and Gears

1 - STUD (DOUBLE ENDED)
2 - DRIVE GEAR
3 - DRIVEN GEAR
4 - CARRIER DOWEL
5 - GEAR(S)
6 - GEAR COVER

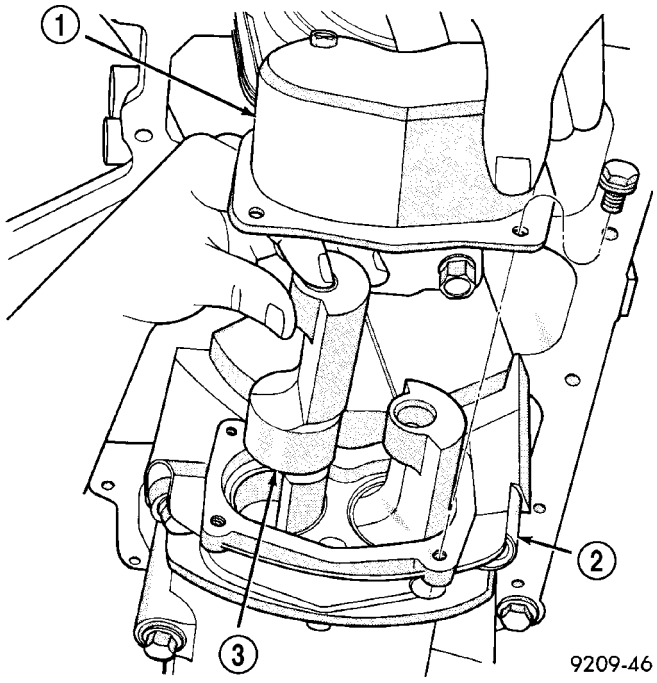

Fig. 138 Balance Shaft - Removal/Installation

1 - REAR COVER
2 - CARRIER
3 - BALANCE SHAFT

INSTALLATION

BALANCE SHAFT INSTALLATION/TIMING

Balance shaft and carrier assembly installation is the reverse of the removal procedure. **During installation crankshaft-to-balance shaft timing must be established. Refer to Timing procedure in this section.**

(1) With balance shafts installed in carrier (Fig. 134) position carrier on crankcase and install four attaching bolts and tighten to 54 N·m (40 ft. lbs.).

(2) Turn balance shafts until both shaft key ways are up, parallel to vertical centerline of engine. Install short hub drive gear on sprocket driven shaft and long hub gear on gear driven shaft. After installation gear and balance shaft keyways must be up with gear timing marks meshed as shown in (Fig. 139).

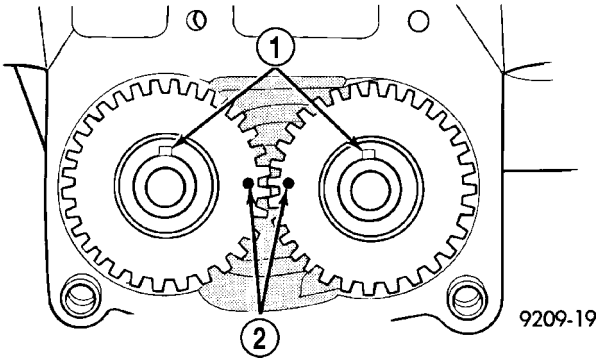

Fig. 139 Gear Timing

1 - KEY WAYS UP
2 - GEAR ALIGNMENT DOTS

(3) Install gear cover and tighten double ended stud/washer fastener to 12 N·m (105 in. lbs.).

(4) Align flat on balance shaft drive sprocket to the flat on crankshaft (Fig. 140).

(5) Install balance shaft drive sprocket on crankshaft using Special Tool 6052 (Fig. 141).

BALANCE SHAFTS AND CARRIER ASSEMBLY (Continued)

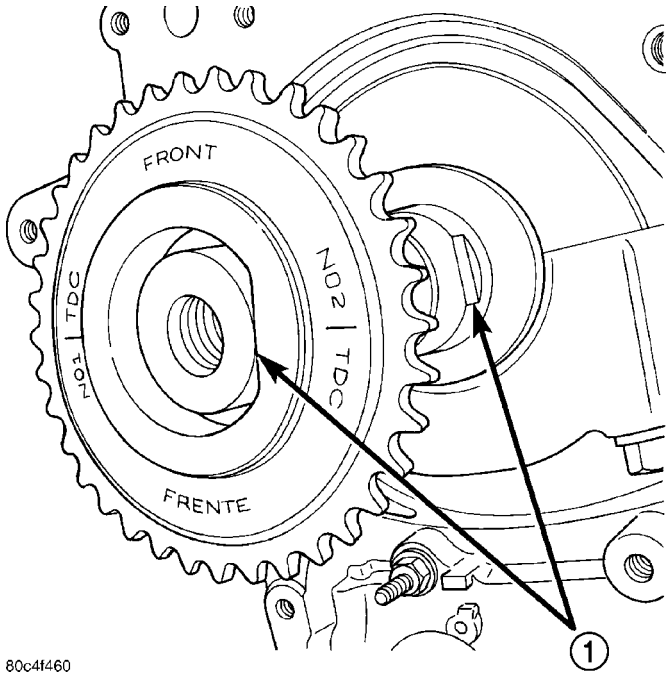

Fig. 140 Balance Shaft Sprocket Alignment to Crankshaft

1 - ALIGN FLATS

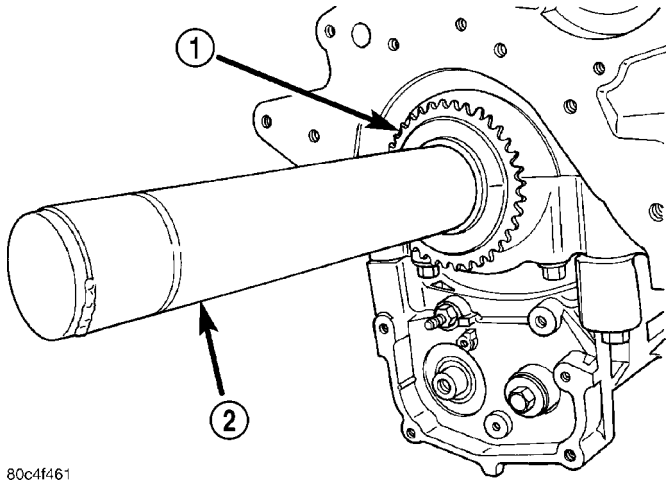

Fig. 141 Balance Shaft Drive

1 - SPROCKET
2 - SPECIAL TOOL 6052

(6) Turn crankshaft until number 1 cylinder is at top dead center (TDC). The timing marks on the chain sprocket should line up with the parting line on the left side of number one main bearing cap. (Fig. 142).

(7) Place chain over crankshaft sprocket so that the plated link of the chain is over the number 1 cylinder timing mark on the balance shaft crankshaft sprocket (Fig. 142).

(8) Place balance shaft sprocket into the timing chain (Fig. 142) and align the timing mark on the sprocket (dot) with the (lower) plated link on the chain.

NOTE: The lower plated link is 8 links from the upper link.

(9) With balance shaft keyways pointing up (12 o'clock) slide the balance shaft sprocket onto the nose of the balance shaft. The balance shaft may have to be pushed in slightly to allow for clearance.

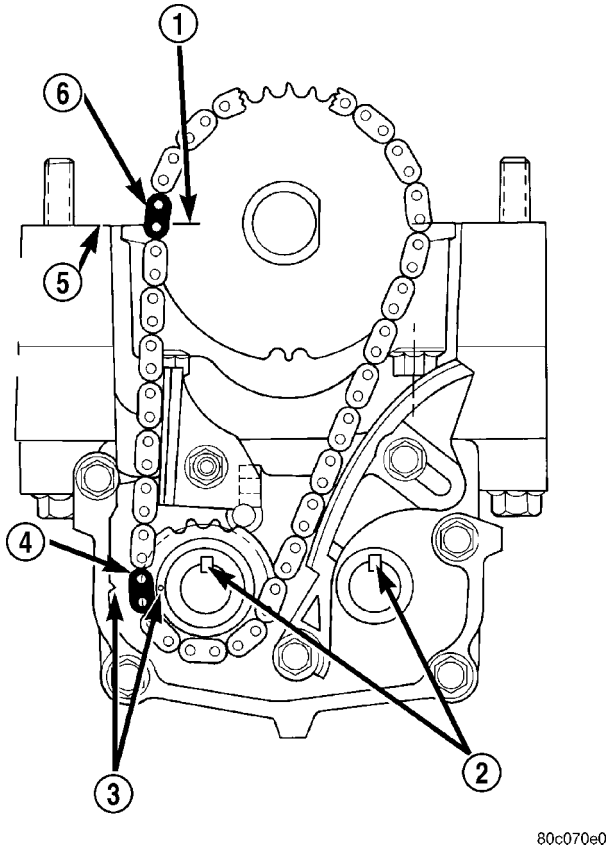

Fig. 142 Balance Shaft Timing

1 - MARK ON SPROCKET
2 - KEYWAYS UP
3 - ALIGN MARKS
4 - PLATED LINK
5 - PARTING LINE (BEDPLATE TO BLOCK)
6 - PLATED LINK

BALANCE SHAFTS AND CARRIER ASSEMBLY (Continued)

NOTE: THE TIMING MARK ON THE SPROCKET, THE (LOWER) NICKEL PLATED LINK, AND THE ARROW ON THE SIDE OF THE GEAR COVER SHOULD LINE UP WHEN THE BALANCE SHAFTS ARE TIMED CORRECTLY.

(10) If the sprockets are timed correctly, install the balance shaft bolts and tighten to 28 N·m (250 in. lbs.). A wood block placed between crankcase and crankshaft counterbalance will prevent crankshaft and gear rotation.

(11) **CHAIN TENSIONING:**

(a) Install chain tensioner loosely assembled with **new** shouldered pivot screw and adjuster screw.

(b) Position guide on double ended stud making sure tab on the guide fits into slot on the gear cover. Install and tighten nut/washer assembly to 12 N·m (105 in. lbs.).

(c) Place a shim 1 mm (0.039 in.) thick x 70 mm (2.75 in.) long between tensioner and chain. Push tensioner and shim up against the chain. **Apply firm pressure 2.5–3 Kg (5.5–6.6 lbs.) directly behind the adjustment slot to take up all slack.** Chain must have shoe radius contact as shown in (Fig. 143).

(d) With the load applied, tighten top tensioner bolt first, then bottom pivot bolt. Tighten bolts to 12 N·m (105 in. lbs.). Remove shim.

(e) Install carrier covers and tighten screws to 12 N·m (105 in. lbs.).

(12) If removed, install oil pump (Refer to 9 - ENGINE/LUBRICATION/OIL PUMP - INSTALLATION).

(13) Install pick-up tube and oil pan (Refer to 9 - ENGINE/LUBRICATION/OIL PAN - INSTALLATION).

(14) Fill engine crankcase with proper oil to correct level.

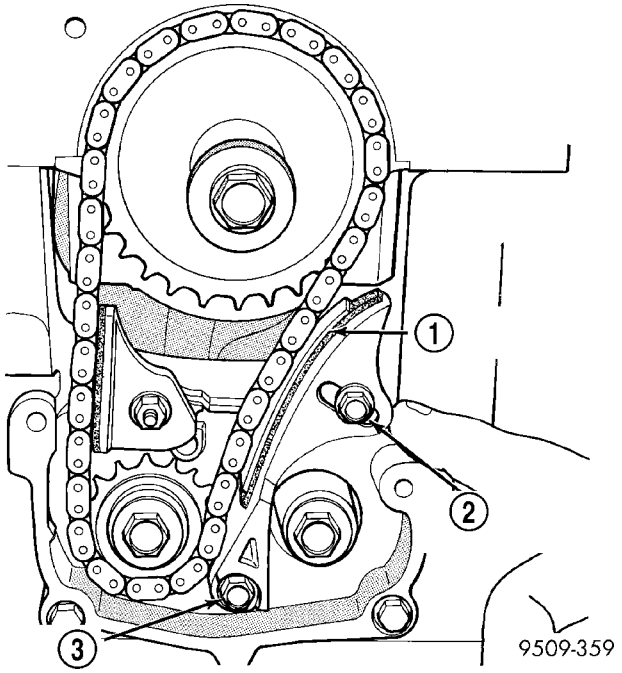

Fig. 143 Chain Tension Adjustment

1 - 1MM (0.039 IN.) SHIM
2 - TENSIONER (ADJUSTER) BOLT
3 - PIVOT BOLT

ENGINE 3.3/3.8L

TABLE OF CONTENTS

page

ENGINE 3.3/3.8L
DESCRIPTION 78
DIAGNOSIS AND TESTING
DIAGNOSIS AND TESTING - ENGINE DIAGNOSIS - INTRODUCTION 78
DIAGNOSIS AND TESTING - ENGINE DIAGNOSIS - PERFORMANCE 80
DIAGNOSIS AND TESTING - ENGINE DIAGNOSIS - MECHANICAL 82
DIAGNOSIS AND TESTING - ENGINE OIL LEAK INSPECTION 84
DIAGNOSIS AND TESTING - CYLINDER COMPRESSION PRESSURE TEST 85
DIAGNOSIS AND TESTING - CYLINDER COMBUSTION PRESSURE LEAKAGE TEST 85
STANDARD PROCEDURE
STANDARD PROCEDURE - MEASURING BEARING CLEARANCE USING PLASTIGAGE 86
FORM-IN-PLACE GASKETS AND SEALERS . 86
STANDARD PROCEDURE - ENGINE GASKET SURFACE PREPARATION 87
HYDROSTATIC LOCKED ENGINE 87
STANDARD PROCEDURE - REPAIR OF DAMAGED OR WORN THREADS 88
STANDARD PROCEDURE - ENGINE CORE AND OIL GALLERY PLUGS 88
REMOVAL - ENGINE ASSEMBLY 88
INSTALLATION - ENGINE ASSEMBLY 91
SPECIFICATIONS
3.3/3.8L ENGINE 93
SPECIFICATIONS - TORQUE 97
SPECIAL TOOLS
3.3/3.8L ENGINE 98
AIR CLEANER ELEMENT
REMOVAL 101
INSTALLATION 101
AIR CLEANER HOUSING
REMOVAL 101
INSTALLATION 102
CYLINDER HEAD
DESCRIPTION 102
DIAGNOSIS AND TESTING—CYLINDER HEAD GASKET 102
REMOVAL - CYLINDER HEAD 103
CLEANING 103
INSPECTION 104
INSTALLATION - CYLINDER HEAD 104

page

CYLINDER HEAD COVER(S)
DESCRIPTION 105
CYLINDER HEAD COVER - RIGHT
REMOVAL 106
INSTALLATION 106
CYLINDER HEAD COVER - LEFT
REMOVAL 107
INSTALLATION 107
INTAKE/EXHAUST VALVES & SEATS
DESCRIPTION 107
OPERATION 107
STANDARD PROCEDURE - REFACING VALVES AND VALVE SEATS 107
REMOVAL 108
CLEANING 108
INSPECTION 108
INSTALLATION 109
VALVE SPRINGS
DESCRIPTION 109
OPERATION 109
REMOVAL
REMOVAL - CYLINDER HEAD OFF 109
REMOVAL - CYLINDER HEAD ON 111
INSPECTION 111
INSTALLATION
INSTALLATION - CYLINDER HEAD OFF . . . 111
INSTALLATION - CYLINDER HEAD ON 111
ROCKER ARMS
DESCRIPTION
DESCRIPTION - ROCKER ARMS 112
DESCRIPTION - PUSHRODS 112
OPERATION
OPERATION - ROCKER ARMS 112
OPERATION - PUSHRODS 112
REMOVAL - ROCKER ARMS AND SHAFT 112
DISASSEMBLY - ROCKER ARMS AND SHAFT 113
ASSEMBLY - ROCKER ARMS AND SHAFT . . . 113
INSTALLATION - ROCKER ARMS AND SHAFT 113
VALVE STEM SEALS
DESCRIPTION 114
REMOVAL 115
INSTALLATION 115
ENGINE BLOCK
DESCRIPTION 115
STANDARD PROCEDURE - CYLINDER BORE HONING 115
CLEANING 115

INSPECTION 115
HYDRAULIC LIFTERS (CAM IN BLOCK)
DESCRIPTION 116
DIAGNOSIS AND TESTING - HYDRAULIC LIFTERS 116
REMOVAL 117
INSTALLATION 117
CAMSHAFT & BEARINGS (IN BLOCK)
DESCRIPTION 118
OPERATION 118
REMOVAL 118
INSPECTION 118
INSTALLATION 118
PISTON & CONNECTING ROD
DESCRIPTION 119
STANDARD PROCEDURE
STANDARD PROCEDURE - FITTING CONNECTING RODS 119
STANDARD PROCEDURE - FITTING PISTONS 120
REMOVAL 120
INSTALLATION 121
CONNECTING ROD BEARINGS
STANDARD PROCEDURE - MEASURING CONNECTING ROD BEARING CLEARANCE 123
PISTON RINGS
STANDARD PROCEDURE - PISTON RING FITTING 124
REMOVAL 124
INSTALLATION 124
CRANKSHAFT MAIN BEARINGS
STANDARD PROCEDURE - MAIN BEARING FITTING 125
REMOVAL - CRANKSHAFT MAIN BEARINGS . 127
INSTALLATION - CRANKSHAFT MAIN BEARINGS 127
CRANKSHAFT
DESCRIPTION
DESCRIPTION - 3.3L 128
DESCRIPTION - 3.8L 128
STANDARD PROCEDURE - MEASURING CRANKSHAFT END PLAY 128
REMOVAL 128
INSTALLATION 129
CRANKSHAFT OIL SEAL - FRONT
REMOVAL 130
INSTALLATION 130
CRANKSHAFT OIL SEAL - REAR
REMOVAL 131
INSTALLATION 131
CRANKSHAFT REAR OIL SEAL RETAINER
REMOVAL 132
INSTALLATION 132
VIBRATION DAMPER
REMOVAL 132
INSTALLATION 132
FLEX PLATE
REMOVAL 133
INSTALLATION 133
ENGINE MOUNTING
DESCRIPTION 134
FRONT MOUNT
REMOVAL 134
INSTALLATION 134
LEFT MOUNT
REMOVAL 136
INSTALLATION 136
REAR MOUNT
REMOVAL 136
INSTALLATION 137
RIGHT MOUNT
REMOVAL 138
INSTALLATION 138
LUBRICATION
DESCRIPTION 138
OPERATION 138
DIAGNOSIS AND TESTING - ENGINE OIL PRESSURE 138
OIL
STANDARD PROCEDURE
STANDARD PROCEDURE - ENGINE OIL AND FILTER CHANGE 139
STANDARD PROCEDURE - ENGINE OIL LEVEL CHECK 140
OIL COOLER & LINES
DESCRIPTION 141
OPERATION 141
REMOVAL 141
INSTALLATION 141
OIL FILTER
REMOVAL 141
INSTALLATION 141
OIL FILTER ADAPTER
REMOVAL 142
INSTALLATION 142
OIL PAN
REMOVAL 142
CLEANING 142
INSPECTION 143
INSTALLATION 143
OIL PRESSURE RELIEF VALVE
REMOVAL 143
INSTALLATION 144
OIL PRESSURE SWITCH
DESCRIPTION 144
OPERATION 144
REMOVAL 144
INSTALLATION 144
OIL PUMP
DESCRIPTION 144
REMOVAL 144
DISASSEMBLY 145
CLEANING 145

INSPECTION 145
ASSEMBLY 146
INSTALLATION 146
INTAKE MANIFOLD
DESCRIPTION 147
DIAGNOSIS AND TESTING - INTAKE MANIFOLD LEAKS 147
INTAKE MANIFOLD - UPPER
STANDARD PROCEDURE
STANDARD PROCEDURE - MANIFOLD STRIPPED THREAD REPAIR 147
STANDARD PROCEDURE - INTAKE MANIFOLD VACUUM PORT REPAIR 148
REMOVAL - UPPER INTAKE MANIFOLD 148
CLEANING 148
INSPECTION 149
INSTALLATION - UPPER INTAKE MANIFOLD . 149
INTAKE MANIFOLD - LOWER
REMOVAL - LOWER INTAKE MANIFOLD 150
CLEANING 151
INSPECTION 151
INSTALLATION - LOWER INTAKE MANIFOLD . 151
EXHAUST MANIFOLD - RIGHT
REMOVAL 152
CLEANING 153
INSPECTION 153
INSTALLATION 153
EXHAUST MANIFOLD - LEFT
REMOVAL 154
CLEANING 154
INSPECTION 155
INSTALLATION 155
VALVE TIMING
STANDARD PROCEDURE
STANDARD PROCEDURE - VALVE TIMING VERIFICATION 155
STANDARD PROCEDURE - MEASURING TIMING CHAIN WEAR 155
TIMING CHAIN COVER
REMOVAL 156
INSTALLATION 157
TIMING CHAIN AND SPROCKETS
REMOVAL
REMOVAL - TIMING CHAIN AND CAMSHAFT SPROCKET 159
REMOVAL - CRANKSHAFT SPROCKET . . . 159
INSTALLATION
INSTALLATION - CRANKSHAFT SPROCKET 160
INSTALLATION - TIMING CHAIN AND CAMSHAFT SPROCKET 160

ENGINE 3.3/3.8L

DESCRIPTION

The 3.3 Liter (201 cu. in.) and 3.8 Liter (231 cu. in.) engines are 60° V-6 engines with cast iron cylinder blocks and aluminum cylinder heads (Fig. 1). The engine uses a single, block mounted camshaft with pushrods to actuate the valves. These engines do not have provisions for a free wheeling valve train.

The firing order is 1–2–3–4–5–6. The cylinders are numbered from the front of the engine to the rear. The front cylinder bank is numbered 2, 4, and 6. The rear cylinder bank is numbered 1, 3, and 5.

The engine identification number is located on the rear of the cylinder block just below the cylinder head (Fig. 2).

DIAGNOSIS AND TESTING

DIAGNOSIS AND TESTING - ENGINE DIAGNOSIS - INTRODUCTION

Engine diagnosis is helpful in determining the causes of malfunctions not detected and remedied by routine maintenance.

These malfunctions may be classified as either mechanical (e.g., a strange noise), or performance (e.g., engine idles rough and stalls).

Refer to the Engine Mechanical and the Engine Performance diagnostic charts, for possible causes and corrections of malfunctions (Refer to 9 - ENGINE - DIAGNOSIS AND TESTING - MECHANICAL) (Refer to 9 - ENGINE - DIAGNOSIS AND TESTING - PERFORMANCE).

For fuel system diagnosis, (Refer to 14 - FUEL SYSTEM/FUEL DELIVERY - DIAGNOSIS AND TESTING).

Additional tests and diagnostic procedures may be necessary for specific engine malfunctions that cannot be isolated with the Service Diagnosis charts. Information concerning additional tests and diagnosis is provided within the following:

- Cylinder Compression Pressure Test
- Cylinder Combustion Pressure Leakage Test
- Engine Cylinder Head Gasket Failure Diagnosis
- Intake Manifold Leakage Diagnosis
- Hydraulic Lash Adjuster Noise Diagnosis
- Engine Oil Leak Inspection

ENGINE 3.3/3.8L (Continued)

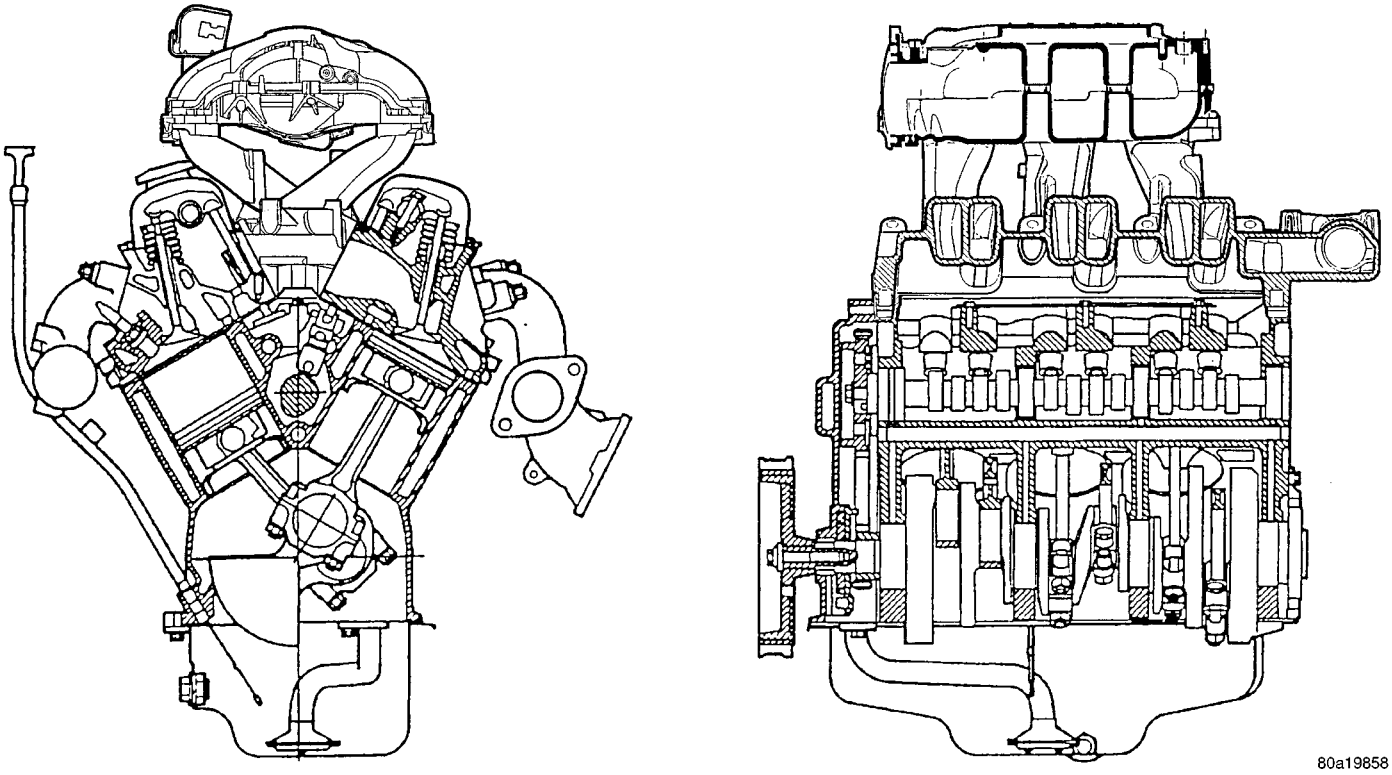

Fig. 1 3.3/3.8L V-6 Engines

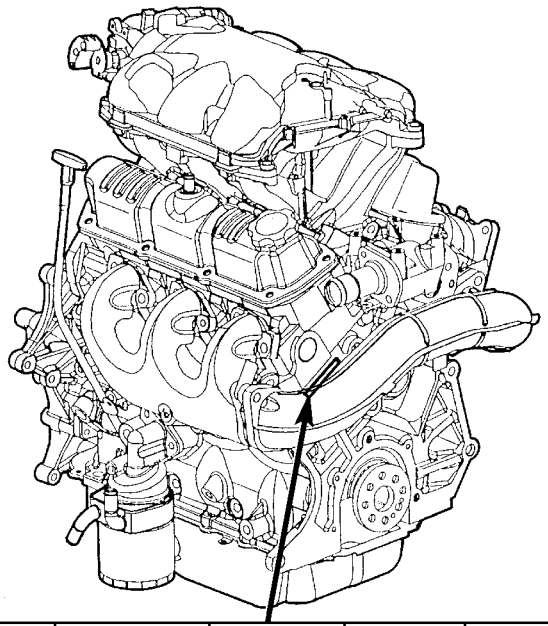

X Model Year	X Manufacturing Plant	XXXXX Component Code/Usage	XXXX Month/Day	XXXXXXXX Serial Code
Last digit of model year	Saltillo S Trenton T	Engine 2.4L 3.3/3.8L Usage Pass Car PC Truck T		Last 8 Digits of VIN

80ac274f

Fig. 2 Engine Identification

ENGINE 3.3/3.8L (Continued)

DIAGNOSIS AND TESTING - ENGINE DIAGNOSIS - PERFORMANCE

CONDITION	POSSIBLE CAUSE	CORRECTION
ENGINE WILL NOT START	1. Weak battery.	1. Test battery. Charge or replace as necessary. (Refer to 8 - ELECTRICAL/BATTERY SYSTEM - DIAGNOSIS AND TESTING)
	2. Corroded or loose battery connections.	2. Clean and tighten battery connections. Apply a coat of light mineral grease to terminals.
	3. Faulty starter.	3. Test starting system. (Refer to 8 - ELECTRICAL/STARTING - DIAGNOSIS AND TESTING)
	4. Faulty coil(s) or control unit.	4. Test and replace as needed. (Refer to Appropriate Diagnostic Information)
	5. Incorrect spark plug gap.	5. Set gap. (Refer to 8 - ELECTRICAL/IGNITION CONTROL - SPECIFICATIONS)
	6. Contamination in fuel system.	6. Clean system and replace fuel filter.
	7. Faulty fuel pump.	7. Test fuel pump and replace as needed. (Refer to Appropriate Diagnostic Information)
	8. Incorrect engine timing.	8. Check for a skipped timing belt/chain.
ENGINE STALLS OR IDLES ROUGH	1. Idle speed too low.	1. Test minimum air flow. (Refer to Appropriate Diagnostic Information)
	2. Incorrect fuel mixture.	2. (Refer to Appropriate Diagnostic Information)
	3. Intake manifold leakage.	3. Inspect intake manifold, manifold gasket, and vacuum hoses.
	4. Faulty ignition coil(s).	4. Test and replace as necessary. (Refer to Appropriate Diagnostic Information)

ENGINE 3.3/3.8L (Continued)

CONDITION	POSSIBLE CAUSE	CORRECTION
ENGINE LOSS OF POWER	1. Dirty or incorrectly gapped plugs.	1. Clean plugs and set gap.
	2. Contamination in fuel system.	2. Clean system and replace fuel filter.
	3. Faulty fuel pump.	3. Test and replace as necessary. (Refer to Appropriate Diagnostic Information)
	4. Incorrect valve timing.	4. Correct valve timing.
	5. Leaking cylinder head gasket.	5. Replace cylinder head gasket.
	6. Low compression.	6. Test compression of each cylinder.
	7. Burned, warped, or pitted valves.	7. Replace valves.
	8. Plugged or restricted exhaust system.	8. Perform exhaust restriction test. (Refer to 11 - EXHAUST SYSTEM - DIAGNOSIS AND TESTING) Install new parts, as necessary.
	9. Faulty ignition coil(s).	9. Test and replace as necessary. (Refer to Appropriate Diagnostic Information)
ENGINE MISSES ON ACCELERATION	1. Dirty or incorrectly gapped spark plugs.	1. Clean spark plugs and set gap.
	2. Contamination in Fuel System.	2. Clean fuel system and replace fuel filter.
	3. Burned, warped, or pitted valves.	3. Replace valves.
	4. Faulty ignition coil(s).	4. Test and replace as necessary. (Refer to Appropriate Diagnostic Information)
ENGINE MISSES AT HIGH SPEED	1. Dirty or incorrect spark plug gap.	1. Clean spark plugs and set gap.
	2. Faulty ignition coil(s).	2. Test and replace as necessary. (Refer to Appropriate Diagnostic Information)
	3. Dirty fuel injector(s).	3. Test and replace as necessary. (Refer to Appropriate Diagnostic Information)
	4. Contamination in fuel system.	4. Clean system and replace fuel filter.

ENGINE 3.3/3.8L (Continued)

DIAGNOSIS AND TESTING - ENGINE DIAGNOSIS - MECHANICAL

CONDITION	POSSIBLE CAUSES	CORRECTION
NOISY VALVES	1. High or low oil level in crankcase.	1. Check and correct engine oil level.
	2. Thin or diluted oil.	2. Change oil to correct viscosity.
	3. Thick oil	3. (a) Change engine oil and filter. (b) Run engine to operating temperature. (c) Change engine oil and filter again.
	4. Low oil pressure.	4. Check and correct engine oil pressure problem.
	5. Dirt in hydraulic lifters/lash adjusters.	5. Replace hydraulic lifters/lash adjusters.
	6. Worn rocker arms.	6. Inspect oil supply to rocker arms.
	7. Worn hydraulic lifters/lash adjusters.	7. Replace hydraulic lifters/lash adjusters.
	8. Worn valve guides.	8. Replace cylinder head assembly.
	9. Excessive runout of valve seats on valve faces.	9. Grind valve seats and valves.
CONNECTING ROD NOISE	1. Insufficient oil supply.	1. Check engine oil level.
	2. Low oil pressure.	2. Check engine oil level. Inspect oil pump relief valve and spring.
	3. Thin or diluted oil.	3. Change oil to correct viscosity.
	4. Thick oil	4. (a) Change engine oil and filter. (b) Run engine to operating temperature. (c) Change engine oil and filter again.
	5. Excessive bearing clearance.	5. Measure bearings for correct clearance. Repair as necessary.
	6. Connecting rod journal out-of-round.	6. Replace crankshaft or grind surface.
	7. Misaligned connecting rods.	7. Replace bent connecting rods.

ENGINE 3.3/3.8L (Continued)

CONDITION	POSSIBLE CAUSES	CORRECTION
MAIN BEARING NOISE	1. Insufficient oil supply.	1. Check engine oil level.
	2. Low oil pressure.	2. Check engine oil level. Inspect oil pump relief valve and spring.
	3. Thin or diluted oil.	3. Change oil to correct viscosity.
	4. Thick oil	4. (a) Change engine oil and filter. (b) Run engine to operating temperature. (c) Change engine oil and filter again.
	5. Excessive bearing clearance.	5. Measure bearings for correct clearance. Repair as necessary.
	6. Excessive end play.	6. Check thrust bearing for wear on flanges.
	7. Crankshaft journal out-of-round or worn.	7. Replace crankshaft or grind journals.
	8. Loose flywheel or torque converter.	8. Tighten to correct torque.
OIL PRESSURE DROP	1. Low oil level.	1. Check engine oil level.
	2. Faulty oil pressure sensor/switch.	2. Replace oil pressure sensor/ switch.
	3. Low oil pressure.	3. Check oil pressure sensor/switch and main bearing oil clearance.
	4. Clogged oil filter.	4. Install new oil filter.
	5. Worn parts in oil pump.	5. Replace worn parts or pump.
	6. Thin or diluted oil.	6. Change oil to correct viscosity.
	7. Oil pump relief valve stuck.	7. Remove valve and inspect, clean, or replace.
	8. Oil pump suction tube loose.	8. Remove oil pan and install new tube or clean, if necessary.
	9. Oil pump cover warped or cracked.	9. Install new oil pump.
	10. Excessive bearing clearance.	10. Measure bearings for correct clearance.
OIL LEAKS	1. Misaligned or deteriorated gaskets.	1. Replace gasket(s).
	2. Loose fastener, broken or porous metal part.	2. Tighten, repair or replace the part.
	3. Misaligned or deteriorated cup or threaded plug.	3. Replace as necessary.

ENGINE 3.3/3.8L (Continued)

CONDITION	POSSIBLE CAUSES	CORRECTION
OIL CONSUMPTION OR SPARK PLUGS FOULED	1. PCV system malfunction.	1. Check system and repair as necessary. (Refer to 25 - EMISSIONS CONTROL/ EVAPORATIVE EMISSIONS/PCV VALVE - DIAGNOSIS AND TESTING)
	2. Worn, scuffed or broken rings.	2. Hone cylinder bores. Install new rings.
	3. Carbon in oil ring slots.	3. Install new rings.
	4. Rings fitted too tightly in grooves.	4. Remove rings and check grooves. If groove is not proper width, replace piston.
	5. Worn valve guide(s).	5. Replace cylinder head assembly.
	6. Valve stem seal(s) worn or damaged.	6. Replace seal(s).

DIAGNOSIS AND TESTING - ENGINE OIL LEAK INSPECTION

Begin with a thorough visual inspection of the engine, particularly at the area of the suspected leak. If an oil leak source is not readily identifiable, the following steps should be followed:

(1) Do not clean or degrease the engine at this time because some solvents may cause rubber to swell, temporarily stopping the leak.

(2) Add an oil soluble dye (use as recommended by manufacturer). Start the engine and let idle for approximately 15 minutes. Check the oil dipstick to make sure the dye is thoroughly mixed as indicated with a bright yellow color under a black light.

(3) Using a black light, inspect the entire engine for fluorescent dye, particularly at the suspected area of oil leak. If the oil leak is found and identified, repair as necessary.

(4) If dye is not observed, drive the vehicle at various speeds for approximately 24 km (15 miles), and repeat inspection.

(5) **If the oil leak source is not positively identified at this time**, proceed with the air leak detection test method as follows:

- Disconnect the fresh air hose (make-up air) at the cylinder head cover and plug or cap the outlet on the cover.
- Remove the PCV valve hose from the cylinder head cover. Cap or plug the PCV valve outlet on the cover.
- Attach an air hose with pressure gauge and regulator to the dipstick tube.

CAUTION: Do not subject the engine assembly to more than 20.6 kpa (3 PSI) of test pressure.

- Gradually apply air pressure from 1 psi to 2.5 psi maximum while applying soapy water at the suspected source. Adjust the regulator to the suitable test pressure that provides the best bubbles which will pinpoint the leak source. If the oil leak is detected and identified, repair per service manual procedures.
- If the leakage occurs at the crankshaft rear oil seal area, refer to the section, Inspection for Rear Seal Area Leak.

(6) If no leaks are detected, turn off the air supply. Remove the air hose, all plugs, and caps. Install the PCV valve and fresh air hose (make-up air). Proceed to next step.

(7) Clean the oil off the suspect oil leak area using a suitable solvent. Drive the vehicle at various speeds approximately 24 km (15 miles). Inspect the engine for signs of an oil leak by using a black light.

NOTE: If oil leakage is observed at the dipstick tube to block location; remove the tube, clean and reseal using Mopar® Stud & Bearing Mount (press fit tube applications only), and for O-ring style tubes, remove tube and replace the O-ring seal.

INSPECTION FOR REAR SEAL AREA LEAKS

Since it is sometimes difficult to determine the source of an oil leak in the rear seal area of the engine, a more involved inspection is necessary. The following steps should be followed to help pinpoint the source of the leak.

If the leakage occurs at the crankshaft rear oil seal area:

(1) Disconnect the battery.

(2) Raise the vehicle.

ENGINE 3.3/3.8L (Continued)

(3) Remove torque converter or clutch housing cover and inspect rear of block for evidence of oil. Use a black light to check for the oil leak. If a leak is present in this area, remove transmission for further inspection.

(a) Circular spray pattern generally indicates seal leakage or crankshaft damage.

(b) Where leakage tends to run straight down, possible causes are a porous block, oil gallery cup plug, bedplate to cylinder block mating surfaces and seal bore. See proper repair procedures for these items.

(4) If no leaks are detected, pressurize the crankcase as previously described.

CAUTION: Do not exceed 20.6 kPa (3 psi).

(5) If the leak is not detected, very slowly turn the crankshaft and watch for leakage. If a leak is detected between the crankshaft and seal while slowly turning the crankshaft, it is possible the crankshaft seal surface is damaged. The seal area on the crankshaft could have minor nicks or scratches that can be polished out with emery cloth.

CAUTION: Use extreme caution when crankshaft polishing is necessary to remove minor nicks and scratches. The crankshaft seal flange is especially machined to complement the function of the rear oil seal.

(6) For bubbles that remain steady with shaft rotation, no further inspection can be done until disassembled.

(7) After the oil leak root cause and appropriate corrective action have been identified, replace component(s) as necessary.

DIAGNOSIS AND TESTING - CYLINDER COMPRESSION PRESSURE TEST

The results of a cylinder compression pressure test can be utilized to diagnose several engine malfunctions.

Ensure the battery is completely charged and the engine starter motor is in good operating condition. Otherwise the indicated compression pressures may not be valid for diagnosis purposes.

(1) Check engine oil level and add oil if necessary.

(2) Drive the vehicle until engine reaches normal operating temperature. Select a route free from traffic and other forms of congestion, observe all traffic laws, and accelerate through the gears several times briskly.

(3) Remove all spark plugs from engine. As spark plugs are being removed, check electrodes for abnormal firing indicators fouled, hot, oily, etc. Record cylinder number of spark plug for future reference.

(4) Remove the Auto Shutdown (ASD) relay from the PDC.

(5) Be sure throttle blade is fully open during the compression check.

(6) Insert compression gauge adaptor Special Tool 8116 or the equivalent, into the #1 spark plug hole in cylinder head. Connect the 0–500 psi (Blue) pressure transducer (Special Tool CH7059) with cable adaptors to the DRBIII®. For Special Tool identification, (Refer to 9 - ENGINE - SPECIAL TOOLS).

(7) Crank engine until maximum pressure is reached on gauge. Record this pressure as #1 cylinder pressure.

(8) Repeat the previous step for all remaining cylinders.

(9) Compression should not be less than 689 kPa (100 psi) and not vary more than 25 percent from cylinder to cylinder.

(10) If one or more cylinders have abnormally low compression pressures, repeat the compression test.

(11) If the same cylinder or cylinders repeat an abnormally low reading on the second compression test, it could indicate the existence of a problem in the cylinder in question. **The recommended compression pressures are to be used only as a guide to diagnosing engine problems. An engine should not be disassembled to determine the cause of low compression unless some malfunction is present.**

DIAGNOSIS AND TESTING - CYLINDER COMBUSTION PRESSURE LEAKAGE TEST

The combustion pressure leakage test provides an accurate means for determining engine condition.

Combustion pressure leakage testing will detect:

- Exhaust and intake valve leaks (improper seating).
- Leaks between adjacent cylinders or into water jacket.
- Any causes for combustion/compression pressure loss.

WARNING: DO NOT REMOVE THE PRESSURE CAP WITH THE SYSTEM HOT AND UNDER PRESSURE BECAUSE SERIOUS BURNS FROM COOLANT CAN OCCUR.

Check the coolant level and fill as required. DO NOT install the pressure cap.

Start and operate the engine until it attains normal operating temperature, then turn the engine OFF.

Clean spark plug recesses with compressed air.

Remove the spark plugs.

Remove the oil filler cap.

Remove the air cleaner.

ENGINE 3.3/3.8L (Continued)

Calibrate the tester according to the manufacturer's instructions. The shop air source for testing should maintain 483 kPa (70 psi) minimum, 1,379 kPa (200 psi) maximum, with 552 kPa (80 psi) recommended.

Perform the test procedures on each cylinder according to the tester manufacturer's instructions. While testing, listen for pressurized air escaping through the throttle body, tailpipe and oil filler cap opening. Check for bubbles in the coolant.

All gauge pressure indications should be equal, with no more than 25% leakage per cylinder.

FOR EXAMPLE: At 552 kPa (80 psi) input pressure, a minimum of 414 kPa (60 psi) should be maintained in the cylinder.

STANDARD PROCEDURE

STANDARD PROCEDURE - MEASURING BEARING CLEARANCE USING PLASTIGAGE

Engine crankshaft bearing clearances can be determined by use of Plastigage or equivalent. The following is the recommended procedure for the use of Plastigage:

(1) Remove oil film from surface to be checked. Plastigage is soluble in oil.

(2) Place a piece of Plastigage across the entire width of the bearing shell in the cap approximately 6.35 mm (1/4 in.) off center and away from the oil holes (Fig. 3). (In addition, suspected areas can be checked by placing the Plastigage in the suspected area). Torque the bearing cap/bed plate bolts of the bearing being checked to the proper specifications.

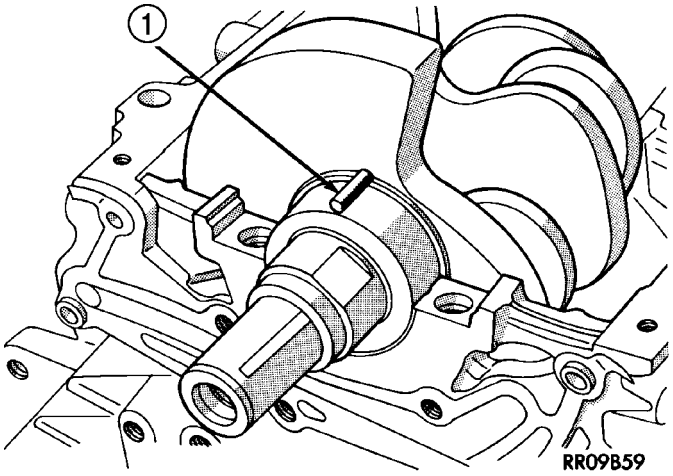

Fig. 3 Plastigage Placed in Lower Shell—Typical

1 - PLASTIGAGE

(3) Remove the bearing cap and compare the width of the flattened Plastigage with the metric scale provided on the package. Locate the band closest to the same width. This band shows the amount of clearance in thousandths of a millimeter. Differences in readings between the ends indicate the amount of taper present. Record all readings taken. Compare the clearance measurements to specsifications found in the engine specifications table(Refer to 9 - ENGINE - SPECIFICATIONS). **Plastigage generally is accompanied by two scales. One scale is in inches, the other is a metric scale.**

NOTE: Plastigage is available in a variety of clearance ranges. Use the most appropriate range for the specifications you are checking.

(4) Install the proper crankshaft bearings to achieve the specified bearing clearances.

FORM-IN-PLACE GASKETS AND SEALERS

There are numerous places where form-in-place gaskets are used on the engine. Care must be taken when applying form-in-place gaskets to assure obtaining the desired results. **Do not use form-in-place gasket material unless specified.** Bead size, continuity, and location are of great importance. Too thin a bead can result in leakage while too much can result in spill-over which can break off and obstruct fluid feed lines. A continuous bead of the proper width is essential to obtain a leak-free gasket.

There are numerous types of form-in-place gasket materials that are used in the engine area. Mopar® Engine RTV GEN II, Mopar® ATF-RTV, and Mopar® Gasket Maker gasket materials, each have different properties and can not be used in place of the other.

MOPAR® ENGINE RTV GEN II is used to seal components exposed to engine oil. This material is a specially designed black silicone rubber RTV that retains adhesion and sealing properties when exposed to engine oil. Moisture in the air causes the material to cure. This material is available in three ounce tubes and has a shelf life of one year. After one year this material will not properly cure. Always inspect the package for the expiration date before use.

MOPAR® ATF RTV is a specifically designed black silicone rubber RTV that retains adhesion and sealing properties to seal components exposed to automatic transmission fluid, engine coolants, and moisture. This material is available in three ounce tubes and has a shelf life of one year. After one year this material will not properly cure. Always inspect the package for the expiration date before use.

MOPAR® GASKET MAKER is an anaerobic type gasket material. The material cures in the absence of air when squeezed between two metallic surfaces. It will not cure if left in the uncovered tube. The anaerobic material is for use between two machined surfaces. Do not use on flexible metal flanges.

ENGINE 3.3/3.8L (Continued)

MOPAR® BED PLATE SEALANT is a unique (green-in-color) anaerobic type gasket material that is specially made to seal the area between the bed plate and cylinder block without disturbing the bearing clearance or alignment of these components. The material cures slowly in the absence of air when torqued between two metallic surfaces, and will rapidly cure when heat is applied.

MOPAR® GASKET SEALANT is a slow drying, permanently soft sealer. This material is recommended for sealing threaded fittings and gaskets against leakage of oil and coolant. Can be used on threaded and machined parts under all temperatures. This material is used on engines with multi-layer steel (MLS) cylinder head gaskets. This material also will prevent corrosion. Mopar® Gasket Sealant is available in a 13 oz. aerosol can or 4oz./16 oz. can w/applicator.

SEALER APPLICATION

Mopar® Gasket Maker material should be applied sparingly 1 mm (0.040 in.) diameter or less of sealant to one gasket surface. Be certain the material surrounds each mounting hole. Excess material can easily be wiped off. Components should be torqued in place within 15 minutes. The use of a locating dowel is recommended during assembly to prevent smearing material off the location.

Mopar® Engine RTV GEN II or ATF RTV gasket material should be applied in a continuous bead approximately 3 mm (0.120 in.) in diameter. All mounting holes must be circled. For corner sealing, a 3.17 or 6.35 mm (1/8 or 1/4 in.) drop is placed in the center of the gasket contact area. Uncured sealant may be removed with a shop towel. Components should be torqued in place while the sealant is still wet to the touch (within 10 minutes). The usage of a locating dowel is recommended during assembly to prevent smearing material off the location.

Mopar® Gasket Sealant in an aerosol can should be applied using a thin, even coat sprayed completely over both surfaces to be joined, and both sides of a gasket. Then proceed with assembly. Material in a can w/applicator can be brushed on evenly over the sealing surfaces. Material in an aerosol can should be used on engines with multi-layer steel gaskets.

STANDARD PROCEDURE - ENGINE GASKET SURFACE PREPARATION

To ensure engine gasket sealing, proper surface preparation must be performed, especially with the use of aluminum engine components and multi-layer steel cylinder head gaskets.

Never use the following to clean gasket surfaces:

- Metal scraper
- Abrasive pad or paper to clean cylinder block and head
- High speed power tool with an abrasive pad or a wire brush (Fig. 4)

NOTE: Multi-Layer Steel (MLS) head gaskets require a scratch free sealing surface.

Only use the following for cleaning gasket surfaces:

- Solvent or a commercially available gasket remover
- Plastic or wood scraper (Fig. 4)
- Drill motor with 3M Roloc™ Bristle Disc (white or yellow) (Fig. 4)

CAUTION: Excessive pressure or high RPM (beyond the recommended speed), can damage the sealing surfaces. The mild (white, 120 grit) bristle disc is recommended. If necessary, the medium (yellow, 80 grit) bristle disc may be used on cast iron surfaces with care.

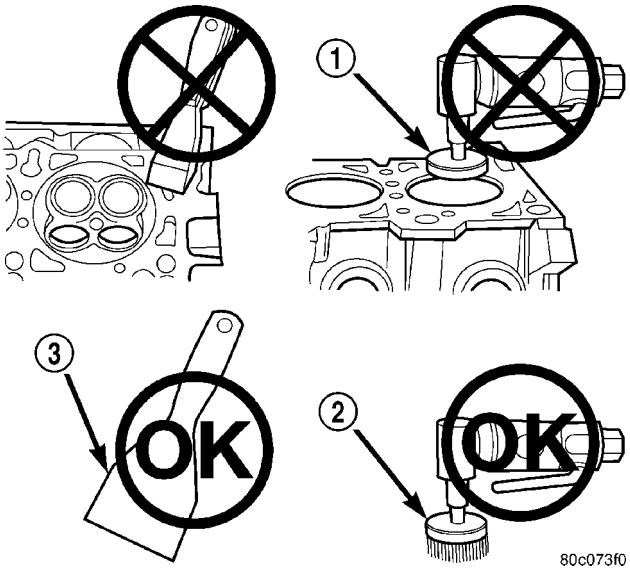

Fig. 4 Proper Tool Usage For Surface Preparation

1 - ABRASIVE PAD
2 - 3M ROLOC™ BRISTLE DISC
3 - PLASTIC/WOOD SCRAPER

HYDROSTATIC LOCKED ENGINE

When an engine is suspected to be hydrostatically locked, regardless of what caused the problem, the following steps should be used.

CAUTION: DO NOT use starter motor to rotate the engine, severe damage may occur.

(1) Inspect air cleaner, induction system and intake manifold to insure system is dry and clear of foreign material.

(2) Remove negative battery cable.

(3) Place a shop towel around the spark plugs when removing them from the engine. This will catch any fluid that may possibly be in the cylinder under pressure.

(4) With all spark plugs removed, rotate engine crankshaft using a breaker bar and socket.

(5) Identify the fluid in the cylinder(s) (i.e., coolant, fuel, oil or other).

(6) Make sure all fluid has been removed from the cylinders. Inspect engine for damage (i.e., connecting rods, pistons, valves, etc.)

(7) Repair engine or components as necessary to prevent this problem from re-occurring.

CAUTION: Squirt approximately one teaspoon of oil into the cylinders, rotate engine to lubricate the cylinder walls to prevent damage on restart.

(8) Install new spark plugs.

(9) Drain engine oil and remove oil filter.

(10) Install a new oil filter.

(11) Fill engine with specified amount of approved oil.

(12) Connect negative battery cable.

(13) Start engine and check for any leaks.

STANDARD PROCEDURE - REPAIR OF DAMAGED OR WORN THREADS

Damaged or worn threads (excluding spark plug and camshaft bearing cap attaching threads) can be repaired. Essentially, this repair consists of drilling out worn or damaged threads, tapping the hole with a special Heli-Coil Tap, (or equivalent) and installing an insert into the tapped hole. This brings the hole back to its original thread size.

CAUTION: Be sure that the tapped holes maintain the original center line.

Heli-Coil tools and inserts are readily available from automotive parts jobbers.

STANDARD PROCEDURE - ENGINE CORE AND OIL GALLERY PLUGS

Using a blunt tool such as a drift and a hammer, strike the bottom edge of the cup plug. With the cup plug rotated, grasp firmly with pliers or other suitable tool and remove plug (Fig. 5).

CAUTION: Do not drive cup plug into the casting as restricted cooling can result and cause serious engine problems.

Thoroughly clean inside of cup plug hole in cylinder block or head. Be sure to remove old sealer. Lightly coat inside of cup plug hole with Mopar® Stud and Bearing Mount. Make certain the new plug is cleaned of all oil or grease. Using proper drive plug, drive plug into hole so that the sharp edge of the plug is at least 0.5 mm (0.020 in.) inside the lead-in chamfer.

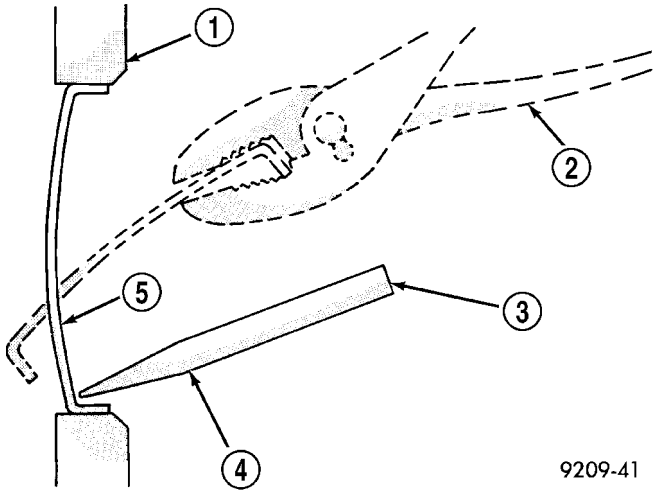

Fig. 5 Core Hole Plug Removal

1 - CYLINDER BLOCK
2 - REMOVE PLUG WITH PLIERS
3 - STRIKE HERE WITH HAMMER
4 - DRIFT PUNCH
5 - CUP PLUG

It is not necessary to wait for curing of the sealant. The cooling system can be refilled and the vehicle placed in service immediately.

REMOVAL - ENGINE ASSEMBLY

(1) Perform fuel pressure release procedure (Refer to 14 - FUEL SYSTEM/FUEL DELIVERY - STANDARD PROCEDURE).

(2) Disconnect negative battery cable.

(3) Remove air cleaner and hoses.

(4) Disconnect the fuel line from fuel rail (Refer to 14 - FUEL SYSTEM/FUEL DELIVERY/QUICK CONNECT FITTING - STANDARD PROCEDURE).

(5) Remove the wiper module (Refer to 8 - ELECTRICAL/WIPERS/WASHERS/WIPER MODULE - REMOVAL).

(6) Block off heater hoses to the rear heater system using pinch-off pliers (if equipped).

(7) Drain the cooling system (Refer to 7 - COOLING - STANDARD PROCEDURE).

(8) Disconnect the heater hoses.

(9) Remove the radiator upper support crossmember (Refer to 23 - BODY/EXTERIOR/GRILLE OPENING REINFORCEMENT - REMOVAL).

(10) Remove the radiator fans (Refer to 7 - COOLING/ENGINE/RADIATOR FAN - REMOVAL).

(11) Disconnect the throttle cables from the throttle body.

(12) Disconnect the MAP, IAC, and TPS electrical connectors.

ENGINE 3.3/3.8L (Continued)

(13) Disconnect the EGR transducer electrical connector (if equipped).
(14) Disconnect the vacuum hoses from throttle body.
(15) Disconnect the brake booster and speed control vacuum hoses.
(16) Disengage wire harness clip from the right side engine mount.
(17) Remove the power steering reservoir from mounting position and set aside. **Do not** disconnect hose.
(18) Disconnect ground strap from rear of cylinder head.
(19) Disconnect engine coolant temperature (ECT) sensor and ignition coil electrical connectors.
(20) Disconnect the fuel injector electrical harness connector and disengage clip from support bracket.
(21) Disconnect camshaft and crankshaft position sensor electrical connectors.
(22) Evacuate air conditioning system. Refer to 24 - HEATING & AIR CONDITIONING.
(23) Disconnect A/C compressor electrical connector.
(24) Disconnect the A/C lines from compressor. Cover and seal all openings of hoses and compressor.
(25) Remove the radiator upper hose.
(26) Disengage electrical harness clip at transaxle dipstick tube.
(27) Remove transaxle dipstick tube. Seal opening using a suitable plug.

NOTE: When the transaxle cooler lines are removed from the rolled-groove type fittings at the transaxle, damage to the inner wall of the hose will occur. To prevent prevent potential leakage, the cooler hoses must be cut off flush at the transaxle fitting, and a service cooler hose splice kit must be installed upon reassembly.

(28) Using a blade or suitable hose cutter, cut transaxle oil cooler lines off flush with fittings. Plug cooler lines and fittings to prevent debris from entering transaxle or cooler circuit. A service splice kit will be installed upon reassembly.
(29) Disconnect transaxle shift linkage and electrical connectors.
(30) Raise vehicle on hoist and drain the engine oil.
(31) Remove the axle shafts. (Refer to 3 - DIFFERENTIAL & DRIVELINE/HALF SHAFT - REMOVAL)
(32) Remove crossmember cradle plate (Fig. 6).
(33) **AWD equipped:** Remove the power transfer unit (PTU) (Refer to 21 - TRANSMISSION/TRANSAXLE/POWER TRANSFER UNIT - REMOVAL).
(34) Disconnect exhaust pipe from the manifold (Fig. 7).

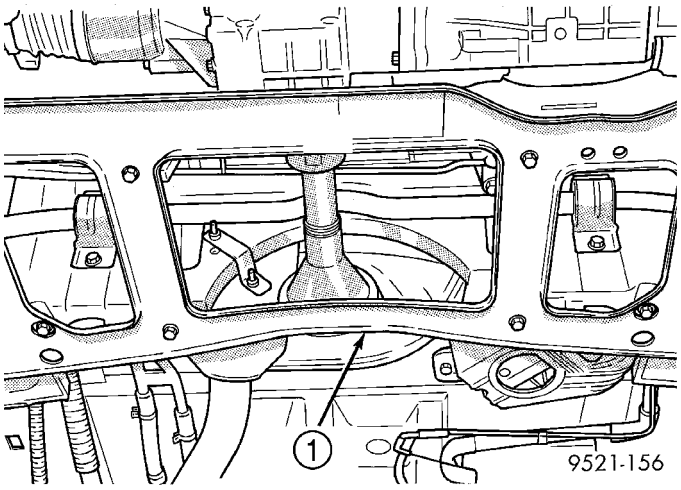

Fig. 6 Crossmember Cradle Plate

1 - CRADLE PLATE

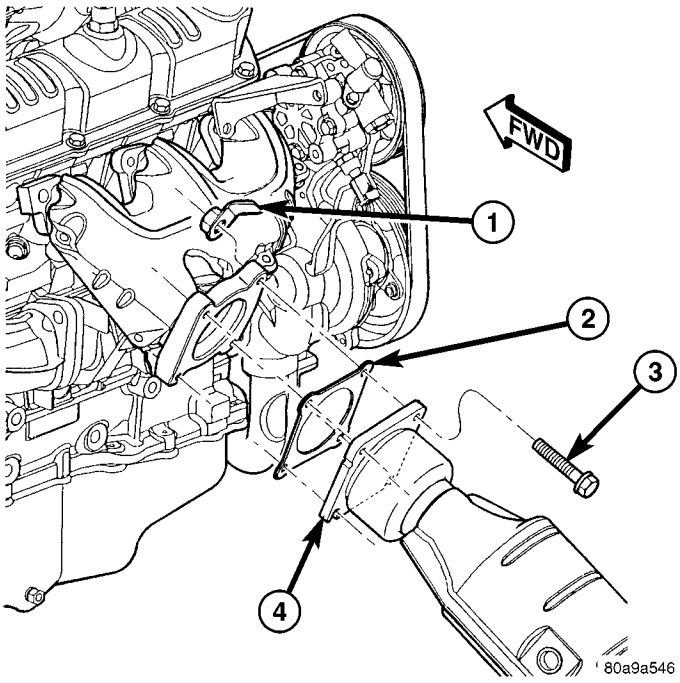

Fig. 7 Catalytic Converter to Exhaust Manifold

1 - FLAG NUT
2 - GASKET
3 - BOLT
4 - CATALYTIC CONVERTER

(35) Remove front engine mount and bracket as an assembly.
(36) Remove the engine rear mount bracket.
(37) Remove the engine to transaxle struts (Fig. 8).
(38) Remove transaxle case cover (Fig. 8).
(39) Remove flex plate to torque converter bolts. Mark torque converter to flex plate for orientation for reassembly.
(40) Remove the power steering pressure hose support clip attaching bolt.

ENGINE 3.3/3.8L (Continued)

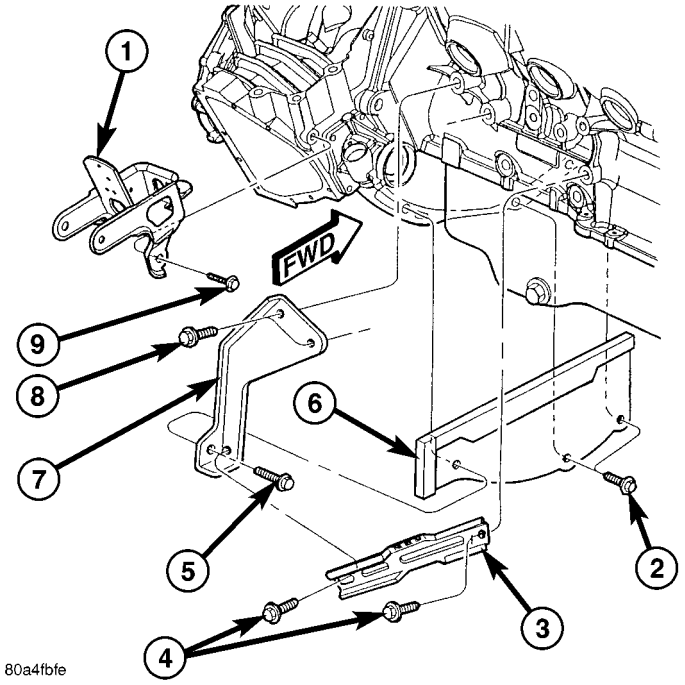

Fig. 8 POWERTRAIN SUPPORTS AND DUST COVER

1 - BRACKET - ENGINE REAR MOUNT
2 - BOLT - TRANSAXLE CASE COVER
3 - STRUT - TRANSAXLE TO ENGINE HORIZONTAL
4 - BOLT - HORIZONTAL STRUT
5 - BOLT - STRUT TO TRANSAXLE
6 - COVER - TRANSAXLE CASE LOWER
7 - STRUT - TRANSAXLE TO ENGINE
8 - BOLT - STRUT TO ENGINE
9 - BOLT - ENGINE REAR MOUNT BRACKET

(41) Disconnect the knock sensor electrical connector (3.8L only).

(42) Disconnect the engine block heater electrical connector (if equipped).

(43) Remove the accessory belt splash shield.

(44) Remove accessory drive belt (Refer to 7 - COOLING/ACCESSORY DRIVE/DRIVE BELTS - REMOVAL).

(45) Disconnect the radiator lower hose.

(46) Remove air conditioning compressor from engine.

(47) Remove the generator (Refer to 8 - ELECTRICAL/CHARGING/GENERATOR - REMOVAL).

(48) Remove the water pump pulley attaching bolts and position pulley between pump hub and housing.

(49) Disconnect the oil pressure switch electrical connector.

(50) Disconnect wiring harness support clip from engine oil dipstick tube.

(51) Install Special Tools 6912 and 8444 Adapters on the right side (rear) of engine block (Fig. 9).

(52) Lower the vehicle.

(53) Remove the power steering pump and set aside.

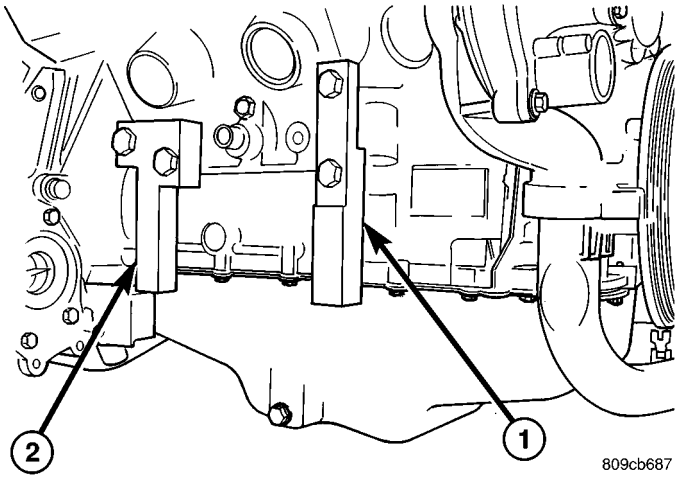

Fig. 9 ADAPTER TOOLS MOUNTED ON BLOCK

1 - SPECIAL TOOL 6912
2 - SPECIAL TOOL 8444

(54) Raise vehicle enough to allow engine dolly Special Tool 6135 and cradle Special Tool 6710 with post Special Tool 6848 and adaptor Special Tool 6909 to be installed under vehicle (Fig. 12).

(55) Loosen cradle/post mounts to allow movement for positioning posts into locating holes on the engine (Fig. 10) and (Fig. 11). Slowly lower vehicle and position cradle/post mounts until the engine is resting on posts. Tighten all cradle/post mounts to cradle frame. This will keep mounts from moving when removing or installing engine and transmission.

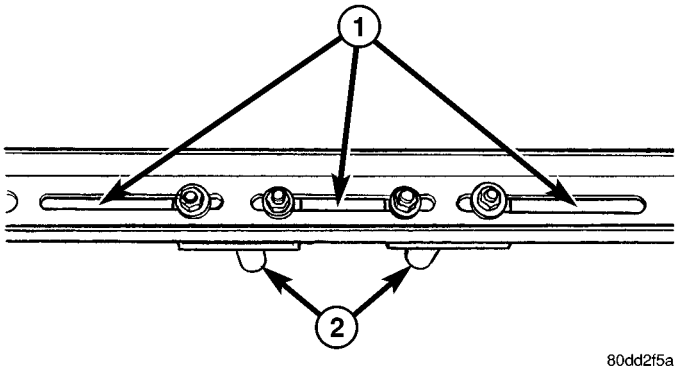

Fig. 10 Positioning Special Tool 6848 for use with Adapters 8444 & 6912

1 - SLOTS
2 - SPECIAL TOOLS 6848

(56) Lower vehicle so the weight of **ONLY THE ENGINE AND TRANSMISSION** is on the cradle.

(57) Install and secure the safety straps to the cradle fixture and around the engine (Fig. 12).

(58) Remove the engine right side mount to engine attaching bolts (Fig. 13).

(59) Remove the left mount through bolt (Fig. 14).

ENGINE 3.3/3.8L (Continued)

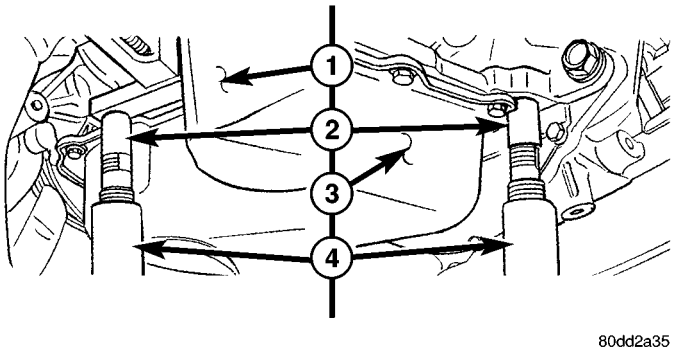

Fig. 11 Special Tools 6848 with Adapters 6909

1 - OIL FILTER
2 - SPECIAL TOOLS 6909
3 - OIL PAN
4 - SPECIAL TOOLS 6848

(60) Raise vehicle slowly. It is necessary to move the engine/transmission assembly with the dolly to allow for removal around body flanges.

INSTALLATION - ENGINE ASSEMBLY

(1) Position engine and transmission assembly under vehicle. Slowly lower the vehicle down over the engine and transmission. It is necessary to move the engine/transmission assembly with the dolly for clearance around body flanges.

(2) Align engine and transmission mounts to attaching points. Install mounting bolts at the right engine mount (Fig. 13) and left transmission mount (Fig. 14).

(3) Remove the safety straps from around engine.

(4) Slowly raise vehicle enough to remove the engine dolly and cradle Special Tools 6135, 6710, 6848 and 6909 (Fig. 12).

(5) Remove Special Tools 6912 and 8444 (Fig. 9).

(6) Lower the vehicle.

(7) Install power steering pump and pressure line support.

(8) Install the generator and wiring harness (Refer to 8 - ELECTRICAL/CHARGING/GENERATOR - INSTALLATION).

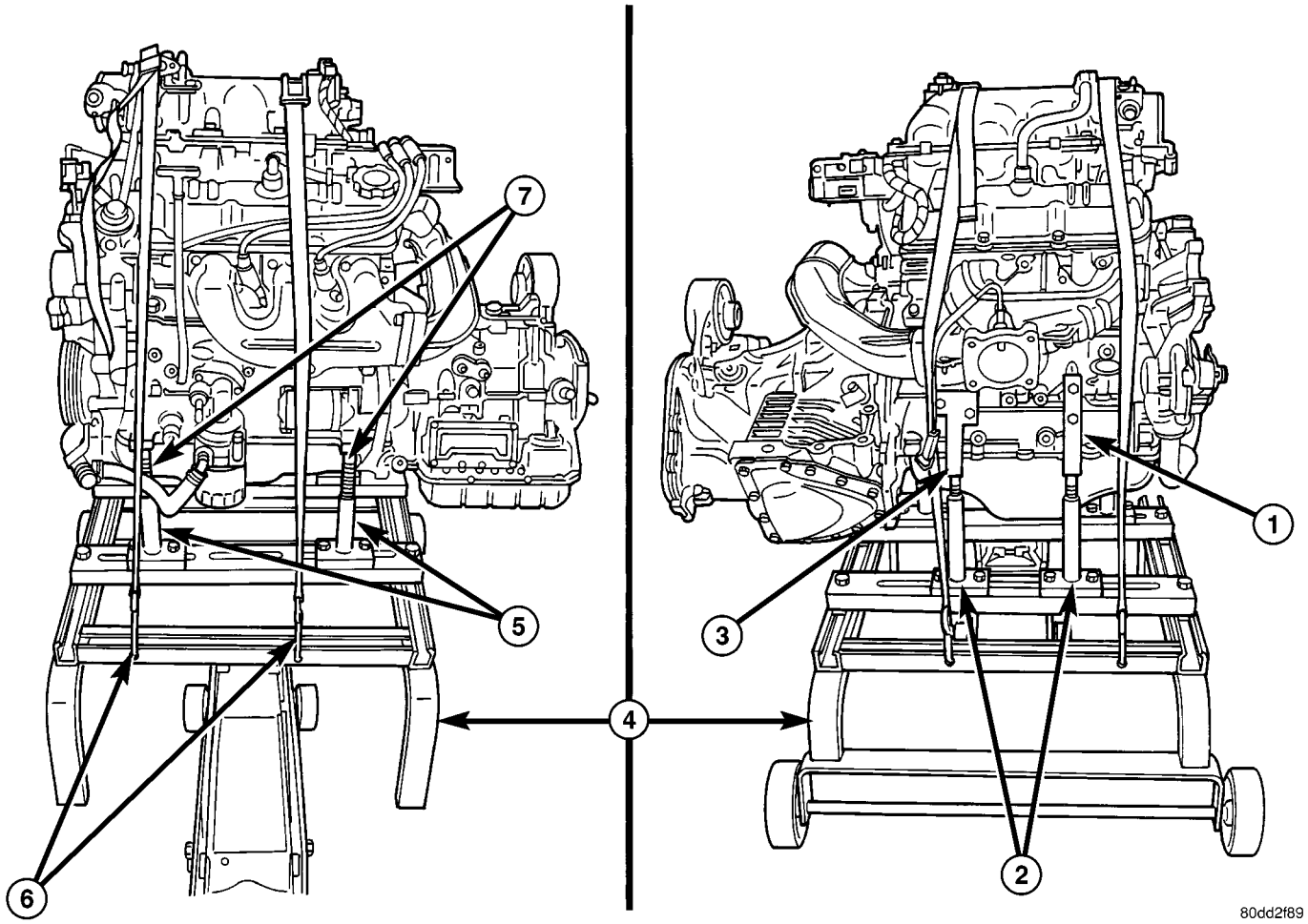

Fig. 12 Positioning Engine Cradle Support Post Mounts

1 - SPECIAL TOOL 8444
2 - SPECIAL TOOLS 6848
3 - SPECIAL TOOL 6912
4 - SPECIAL TOOLS 6135 & 6710
5 - SPECIAL TOOLS 6848
6 - SAFETY STRAPS
7 - SPECIAL TOOLS 6909

ENGINE 3.3/3.8L (Continued)

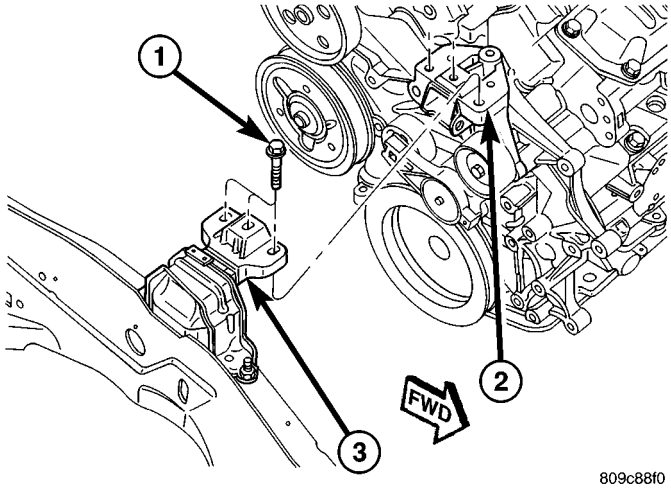

Fig. 13 Right Mount to Engine

1 - BOLT
2 - MOUNT BRACKET
3 - ENGINE RIGHT MOUNT ASSEMBLY

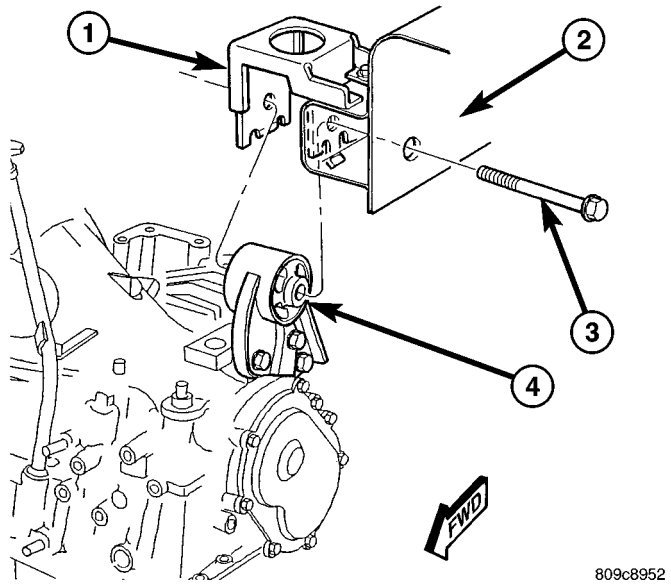

Fig. 14 LEFT MOUNT TO FRAME BRACKET

1 - FRAME BRACKET
2 - FRAME RAIL - LEFT
3 - BOLT
4 - TRANSAXLE MOUNT

(9) Raise vehicle.

(10) Attach wiring harness support clip to the engine oil dipstick tube.

(11) Connect oil pressure switch electrical connector.

(12) Install the A/C compressor.

(13) Install the water pump pulley.

(14) Connect the radiator lower hose.

(15) Install the accessory drive belt and splash shield (Refer to 7 - COOLING/ACCESSORY DRIVE/ DRIVE BELTS - INSTALLATION).

(16) Connect the engine block heater electrical connector (if equipped).

(17) Connect the knock sensor electrical connector (3.8L only).

(18) Install the torque converter to flex plate bolts.

(19) Install the transaxle case cover (Fig. 8).

(20) Install the powertrain struts (Fig. 8).

(21) Install the engine rear mount bracket.

(22) Install the engine front mount and bracket assembly.

(23) **AWD equipped;** Install the power transfer unit (PTU) (Refer to 21 - TRANSMISSION/TRANSAXLE/POWER TRANSFER UNIT - INSTALLATION).

(24) Install the axle shafts (Refer to 3 - DIFFERENTIAL & DRIVELINE/HALF SHAFT - INSTALLATION).

(25) Connect exhaust pipe to manifold (Fig. 7).

(26) Install crossmember cradle plate (Fig. 6).

(27) Lower vehicle.

(28) Connect transaxle shift linkage.

(29) Connect transaxle electrical connectors.

(30) Remove plugs from transmission cooler hoses and install transaxle oil cooler line service splice kit. Refer to instructions included with kit.

(31) Install transaxle dipstick tube and attach electrical harness clip.

(32) Connect the A/C lines to compressor.

(33) Connect the A/C compressor electrical connector.

(34) Evacuate and recharge A/C system.

(35) Connect crankshaft and camshaft position sensors.

(36) Connect the fuel injector electrical harness connector and engage clip to support bracket.

(37) Connect engine coolant temperature (ECT) sensor and ignition coil electrical connectors.

(38) Connect the ground strap to rear of cylinder head.

(39) Install power steering reservoir.

(40) Engage wire harness clip to engine right side mount.

(41) Connect the brake booster and speed control vacuum hoses.

(42) Connect the vacuum hoses to the throttle body.

(43) Connect the EGR transducer electrical connector (if equipped).

(44) Connect the TPS, IAC, and MAP sensor electrical connectors.

(45) Connect throttle cables to throttle body.

(46) Install the radiator fans (Refer to 7 - COOLING/ENGINE/RADIATOR FAN - INSTALLATION).

(47) Connect the radiator upper hose.

(48) Connect the heater hoses. Remove pinch-off pliers from the rear heater hoses (if equipped).

ENGINE 3.3/3.8L (Continued)

(49) Install the radiator upper support crossmember (Refer to 23 - BODY/EXTERIOR/GRILLE OPENING REINFORCEMENT - INSTALLATION).

(50) Install the wiper module (Refer to 8 - ELECTRICAL/WIPERS/WASHERS/WIPER MODULE - INSTALLATION).

(51) Connect the fuel line to fuel rail (Refer to 14 - FUEL SYSTEM/FUEL DELIVERY/FUEL LINES - STANDARD PROCEDURE).

(52) Install the air cleaner and hoses.

(53) Install new oil filter. Fill engine crankcase with proper oil to correct level.

(54) Connect negative cable to battery.

(55) Fill the cooling system (Refer to 7 - COOLING - STANDARD PROCEDURE).

(56) Start engine and run until operating temperature is reached.

(57) Adjust transmission linkage, if necessary.

SPECIFICATIONS

3.3/3.8L ENGINE

GENERAL DESCRIPTION

DESCRIPTION	SPECIFICATION	
	Metric	Standard
Engine Type	60° V-6 Engine	
Number of Cylinders	6	
Displacement 3.3L	3.3Liters	201 cu.in.
Displacement 3.8L	3.8 Liters	231 cu. in.
Bore 3.3L	93.0 mm	201 cu.in.
Bore 3.8L	96.0 mm	3.779 cu.in.
Stroke 3.3L	81 mm	3.188 in.
Stroke	87 mm	3.425 in.
Compression Ratio 3.3L	-	9.35:1
Compression Ratio 3.8L	-	9.6:1
Firing Order	-	1-2-3-4-5-6
Compression Pressure-Minimum	689.5 kPa	100 psi.
Cylinder Compression (Max. Difference Between Cylinders	-	25%

CYLINDER BLOCK

DESCRIPTION	SPECIFICATION	
	Metric	Standard
Cylinder Bore Diameter (Standard) 3.3L	92.993-93.007 mm	3.661-3.6617 in.
Cylinder Bore Diameter (Standard) 3.8L	95.993-96.007 mm	3.7792-3.780 in.
Out of Round (Service Limits)	0.076 mm	0.003 in.
Taper (Service Limits)	0.051 mm	0.002 in.
Lifter Bore Diameter	22.980-23.010 mm	0.905-0.906 in.
Deck Surface Flatness (Max.)	0.1 mm	0.004 in.

CRANKSHAFT

DESCRIPTION	SPECIFICATION	
	Metric	Standard
Connecting Rod Journal Diameter	57.979-58.005 mm	2.2827-2.2837 in.
Main Bearing Journal Diameter	63.993-64.013 mm	2.5194-2.5202 in.
Journal Out-of-Round (Max.)	0.025 mm	0.001 in.
Journal Taper (Max.)	0.025 mm	0.001 in
End Play	0.09-0.24 mm	0.0036-0.0095 in.
Wear Limit	0.381 mm	0.015 in.
Main Bearing Diametrical Clearance 1-2-3-4	0.011-0.055 mm	0.0005-0.0022 in.
Wear Limit	0.076 mm	0.003 in.

ENGINE 3.3/3.8L (Continued)

CONNECTING RODS

DESCRIPTION	SPECIFICATION	
	Metric	Standard
Bearing Clearance	0.019-0.065 mm.	0.017-0.020 in.
Wear Limit	0.074 mm	0.003 in.
Side Clearance	0.13-0.32 mm	0.005-0.013 in.
Wear Limit	0.38 mm	0.015 in.

PISTONS

DESCRIPTION	SPECIFICATION	
	Metric	Standard
Piston Diameter 3.3L-Measured 39.8 mm (1.567 in) From Piston Top	92.968-92.998 mm.	3.660-3.661 in.
Piston Diameter 3.8L-Measured 33.01 mm (1.30 in) From Piston Top	95.968-95.998 mm.	3.778-3.779 in.
Clearance in Bore @ Size Location (New)	-0.005-0.039 mm	-0.0002–0.0015 in.
Weight 3.3L	362 ± 5 grams	12.77 ± 0.1764 oz.
Weight 3.8L	426 ± 5 grams	15.03 ± 0.1764 oz.

PISTON PINS

DESCRIPTION	SPECIFICATION	
	Metric	Standard
Type	Press Fit in Rod (Serviced as a Assembly)	
Clearance in Piston @ 21C (70°F)	0.006-0.019 mm	0.0002-0.0007 in.
Clearance in Connecting Rod	Interference Fit	
Diameter	22.87-22.88 mm	0.9007-0.9009 in.
Length 3.3L	67.25-67.75 mm	2.648-2.667 in.
Length 3.8L	71.25-71.75 mm	2.805-2.824 in.

PISTON RINGS

DESCRIPTION	SPECIFICATION	
	Metric	Standard
Ring End Gap		
Top Compression Ring	0.18-0.38 mm	0.007-0.015 in.
Second Compression Ring	0.28-0.57 mm	0.011-0.022 in.
Oil Control (Steel Rails)	0.23-0.78 mm	0.009-0.030 in.
Wear Limit-Compression Rings	1.0 mm	0.039 in.
Wear Limit-Oil Control Steel Rails	1.88 mm	0.074 in.
Ring Side Clearance		
Top Compression Ring 3.3L	0.030-0.080 mm	0.0012-0.0031 in.
Top Compression Ring 3.8L	0.030-0.069 mm	0.0012-0.0027 in.
Second Compression Ring 3.3L	0.030-0.095 mm	0.0012-0.0037 in.
Second Compression Ring 3.8L	0.041-0.085 mm	0.0016-0.0033 in.
Oil Ring (Steel Ring)	0.039-0.200 mm	0.0015-0.0078 in.
Wear Limit- Top Ring	0.10 mm	0.004 in.
Wear Limit-2nd Ring	0.13 mm	0.005
Wear Limit Oil Ring Pack	0.266 mm	0.009
Ring Width-Top Compression Ring 3.3L	1.46-1.49 mm	0.0575-0.058 in.
Ring Width-Top Compression Ring 3.8L	1.175-1.190 mm	0.0462-0.0468

ENGINE 3.3/3.8L (Continued)

DESCRIPTION	SPECIFICATION	
	Metric	Standard
Ring Width-2nd Compression Ring 3.3L and 3.8L	1.46-1.49 mm	0.0575-0.058 in.
Ring Width-Oil Ring (Steel Rails) 3.3L	0.435-0.490 mm	-.017-0.019 in.
Ring Width-Oil Ring (Steel Rails) 3.8L	0.435-0.510 mm	0.017-0.020

CAMSHAFT

DESCRIPTION	SPECIFICATION	
	Metric	Standard
Journal Diameter		
#1	50.724-50.775 mm	1.997-1.999 in.
#2	50.317-50.368 mm	1.9809-1.9829 in.
#3	49.936-49.987 mm	1.9659-1.9679 in.
#4	49.530-49.581 mm	1.9499-1.9520 in.
Bearing Clearance-Diametrical	0.025-0.101 mm	0.001-0.004 in.
Bearing Clearance (Max.Allowable)	0.127 mm	0.005 in.
End Play	0.254-0.508 mm	0.010-0.020 in.
Camshaft Bearing Diameter		
#1	50.800-50.825	1.9999-2.0009 in.
#2	50.393-50.419 mm	1.9839-1.9849 in.
#3	50.013-50.038 mm	1.9690-1.9699 in.
#4	49.606-49.632 mm	1.9529-1.954 in.
Exhaust Valve Timing		
Closes-3.3L (ATDC)	-	13°
Closes-3.8L (ATDC)	-	18°
Opens-3.3L (BBDC)	-	43°
Opens-3.8L (BBDC)	-	46°
Duration-3.3L	-	236°
Duration-3.8L	-	244°
Intake Valve Timing		
Closes-3.3L (ABDC)	-	52°
Closes-3.8L (ABDC)	-	63°
Opens-3.3L (ATDC)	-	6°
Opens-3.8L (ATDC)	-	1°
Duration-3.3L	-	226°
Duration-3.8L	-	242°
Valve Overlap-3.3L	-	7°
Valve Overlap-3.8L	-	17°

HYDRAULIC LIFTER

DESCRIPTION	SPECIFICATION	
	Metric	Standard
Type	Hydraulic Roller	
Outside Diameter	22.949-22.962 mm	0.903-0.904 in.
Clearance in Block	0.020-0.061 mm	0.0007-0.0024 in.

CYLINDER HEAD

DESCRIPTION	SPECIFICATION	
	Metric	Standard
Gasket Thickness (Compressed)	0.65-0.75 mm	0.0007-0.0024 in.

ENGINE 3.3/3.8L (Continued)

VALVES

DESCRIPTION	SPECIFICATION	
	Metric	Standard
Face Angle-Intake	-	45-45.5°
Face Angle-Exhaust	-	45-45.5°
Head Diameter-Intake	47.87-48.13 mm	1.88-1.89 in.
Head Diameter-Exhaust	35.37-35.63 mm	1.39-1.40 in.
Valve Lift (Zero Lash)-Intake and Exhaust-3.3L	9.80 mm	0.385 in.
Valve Lift (Zero Lash)-Intake and Exhaust-3.8L	11.0 mm	0.433 in.
Valve Length-Intake	125.84-126.6 mm	4.95-4.98 in.
Valve Length-Exhaust	127.20-127.96	5.00-5.04 in.
Valve Stem to Tip Height (valve tip to spring seat washer)-Intake	48.1-49.7 mm	1.89-1.95 in.
Valve Stem to Tip Height (valve tip to spring seat washer)-Exhaust	48.53-50.09 mm	1.91-1.97 in.

VALVE SEAT

DESCRIPTION	SPECIFICATION	
	Metric	Standard
Angle	-	44.5-45°
Run Out (Service Limits)	0.0762 mm	0.003 in.
Width-Intake and Exhaust	1.50-2.00 mm	0.057-0.078 in.

VALVE GUIDE

DESCRIPTION	SPECIFICATION	
	Metric	Standard
Guide Bore Diameter (Std.)	6.975-7.00 mm	0.274-0.275 in.

VALVE MARGIN

DESCRIPTION	SPECIFICATION	
	Metric	Standard
Intake	0.825-0.973 mm	0.032-0.038 in.
Exhaust	1.565-1.713 mm	0.061-0.067 in.

VALVE STEM DIAMETER

DESCRIPTION	SPECIFICATION	
	Metric	Standard
Intake (Standard)	6.935-6.953 mm	0.2718-0.2725 in.
Exhaust (Standard)	6.906-6.924 mm	0.2718-0.2725 in.

VALVE STEM TO GUIDE CLEARANCE

DESCRIPTION	SPECIFICATION	
	Metric	Standard
Intake	0.025-0.065 mm	0.001-0.0025 in.
Exhaust	0.059-0.094 mm	0.002-0.0037 in.
Max Allowable-Intake (Rocking Method)	0.247 mm	0.010 in.
Max Allowable-Exhaust (Rocking Method)	0.414 mm	0.016 in.

PUSH RODS

DESCRIPTION	SPECIFICATION	
	Metric	Standard
Length	135.438 mm	5.33 in.

ENGINE 3.3/3.8L (Continued)

VALVE SPRING

DESCRIPTION	SPECIFICATION	
	Metric	Standard
Free Length-Type A	51.4 mm	2.02 in.
Free Length-Type B	53.4 mm	2.10 in.
Wire Diameter Type A	3.95-4.77 mm	0.15-0.19 in.
Wire Diameter Type B	4.19-4.29 mm	0.16-0.17 in.
Number of Coils Type A	7.52	
Number of Coils Type B	7.25	
Spring Tension (Valve Closed) Type A	376.4-424.4 N @ 41.9 mm	84.6-95.6 lbs. @ 1.65 in.
Spring Tension (Valve Open) Type A	863.9-959.9 N @ 41.9 mm	194.2-215.8 lbs. @ 1.65 in.
Spring Tension (Valve Closed) Type B	377-423 N @ 41.9 mm	84.8-95.2 lbs. @ 1.65 in.
Spring Tension (Valve Open) Type B	880-962 N @ 30.91 mm	197.9-216.3 lbs. @ 122 in.
Installed Height	41.1-42.7 mm	1.61-1.68 in

LUBRICATION

DESCRIPTION	SPECIFICATION	
	Metric	Standard
At Curb Idle Speed* (Minimum with engine at operating temperature)	34.47 kPa	5 psi
At 3000 RPM	205-551 kPa	30-80 psi
Oil Filter By-Pass Valve Setting	62-103 kPa	9-15 psi
Oil Pressure Switch Actuating Pressure	14-28 Kpa	2-4 psi
caution: *If pressure is ZERO at curb idle, DO NOT run engine at 3000 rpm.		

OIL PUMP

DESCRIPTION	SPECIFICATION	
	Metric	Standard
Clearance Over rotors-Inner and Outer	0.10 mm	0.004 in.
Cover Out-Of-Flat (Max.)	0.025 mm	0.001 in.
Inner Rotor Thickness	7.64 mm	0.301 in.
Outer Rotor Thickness (Min)	7.64 mm	0.301 in.
Outer Rotor Clearance (Max)	0.039 mm	0.015 in.
Outer Rotor Diameter (Min)	79.95 mm	3.148 in.
Tip Clearance Between Rotors (Max)	0.20 mm	0.008 in.

SPECIFICATIONS - TORQUE

DESCRIPTION	N·m	Ft. Lbs.	In. Lbs.
Camshaft Sprocket—Bolt	54	40	—
Camshaft Thrust Plate—Bolts	12	—	105
Connecting Rod Cap—Bolts	54 +¼ turn	40 +¼ turn	—
Crankshaft Main Bearing Cap—Bolts	41 +¼ turn	30 +¼ turn	—
Crankshaft Main Bearing Cap Cross Bolts (3.8L)	61	45	—
Crankshaft Oil Seal Retainer Rear—Bolts	12	—	105
Crankshaft Damper—Bolt	54	40	—
Cylinder Block Drain Plugs	20	15	—
Cylinder Head—Bolts	(Refer to 9 - ENGINE/ CYLINDER HEAD - INSTALLATION)		
Cylinder Head Cover—Bolts	12	—	105
Flex Plate to Crankshaft	95	70	—

ENGINE 3.3/3.8L (Continued)

DESCRIPTION	N·m	Ft. Lbs.	In. Lbs.
Engine Mounting	(Refer to 9 - ENGINE/ ENGINE MOUNTING)		
Exhaust Manifold—Bolts	23	—	200
Exhaust Crossover Pipe—Bolts	54	40	—
Intake Manifold - Lower—Bolts	23	—	200
Intake Manifold - Lower Gasket Retainer—Bolts	12	—	105
Intake Manifold Upper—Bolts	12	—	105
Lifter Yoke Retainer—Bolts	12	—	105
Oil Filter Attaching Fitting	54	40	—
Oil Cooler Attaching Fitting	27	20	—
Oil Filter	20	15	—
Oil Filter Adapter—Bolts	28	—	250
Oil Gallery Plug	27	20	—
Oil Pan—Bolts	12	—	105
Oil Pan Drain—Plug	27	20	—
Oil Pressure Switch	23	—	200
Oil Pump Cover Plate—Screws	12	—	105
Oil Pump Pick-up Tube—Bolt	28	—	250
Oil Dipstick Housing—Bolts	48	35	—
Rocker Arm Shaft—Bolts	23	—	200
Spark Plug	16	12	—
Timing Chain Case Cover			
—M8 Bolt	27	20	—
—M10 Bolt	54	40	—
Water Pump—Bolts	12	—	105
Water Pump Pulley—Bolts	28	—	250

SPECIAL TOOLS

3.3/3.8L ENGINE

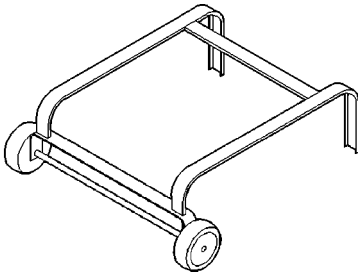

Dolly 6135

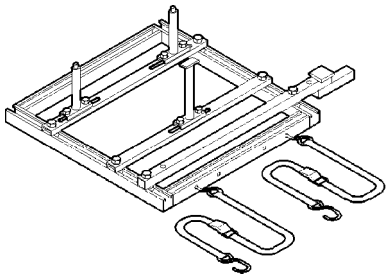

Cradle 6710A

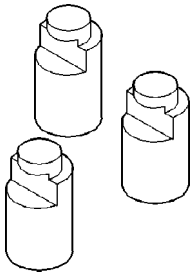

Adapter 6909A

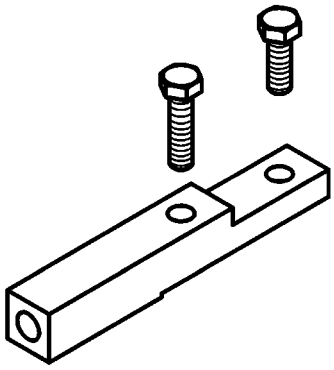

Adapter 8444

ENGINE 3.3/3.8L (Continued)

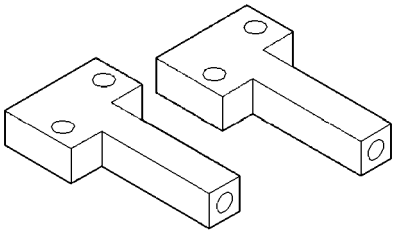

Adapter 6912

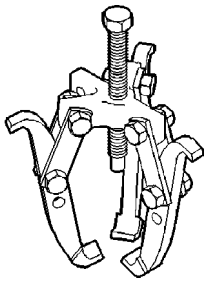

Puller 1026

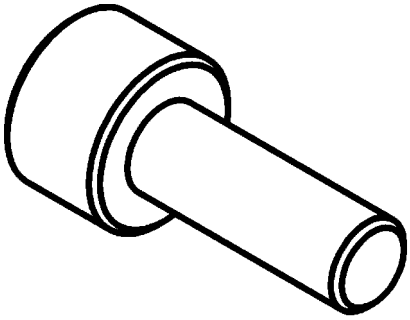

Insert, Crankshaft 8450

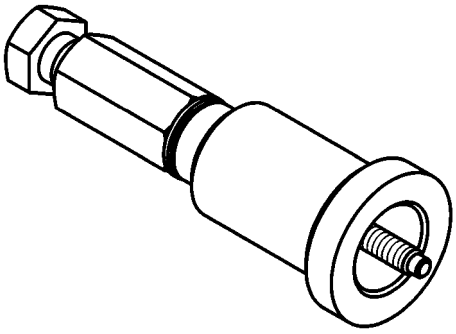

Crankshaft Damper/Sprocket Installer 8452

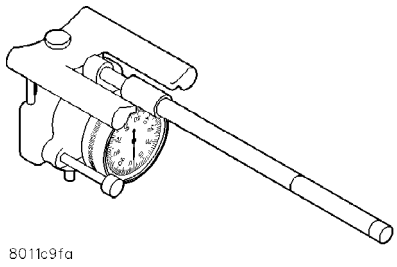

Indicator, Cylinder Bore C-119

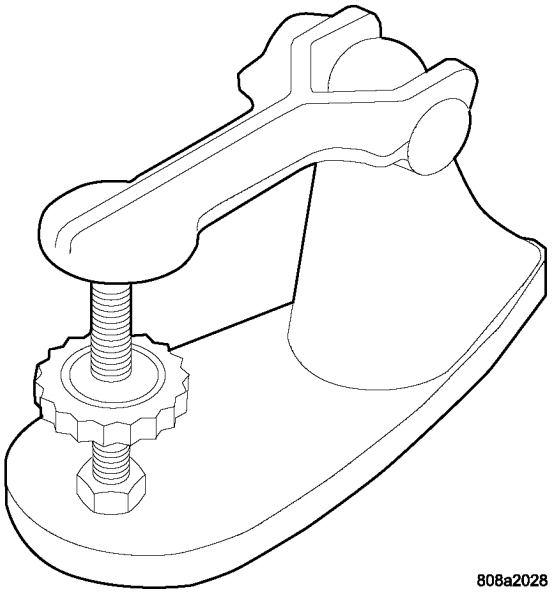

Tester - Valve Spring C-647

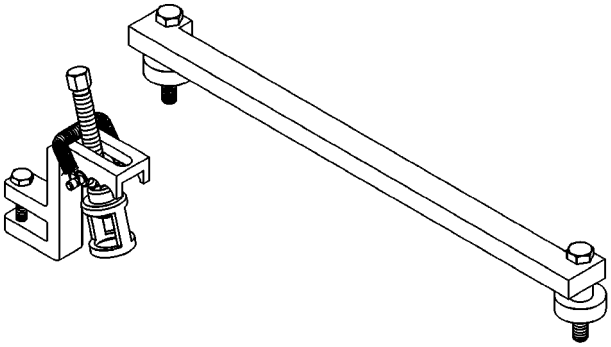

Compressor, Valve Spring In-vehicle 8453

ENGINE 3.3/3.8L (Continued)

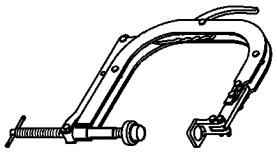

Valve Spring Compressor Off-vehicle C-3422-D

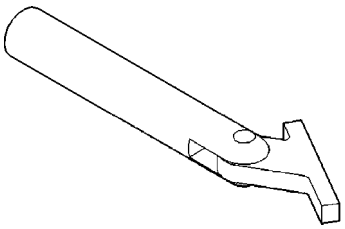

Remover and Installer, Crankshaft Main Bearing C-3059

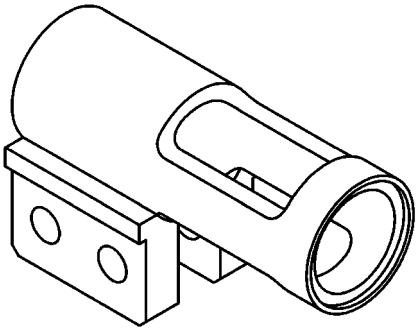

Adapter, Valve Spring Compressor Off-vehicle 8464

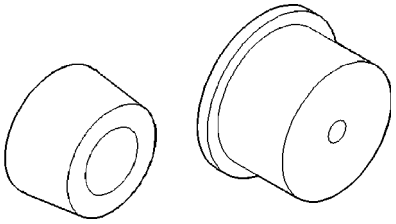

Rear Crankshaft Oil Seal Installer 6926

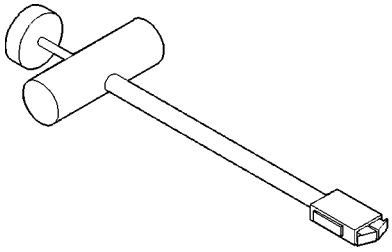

Remover, Valve Tappet C-4129-A

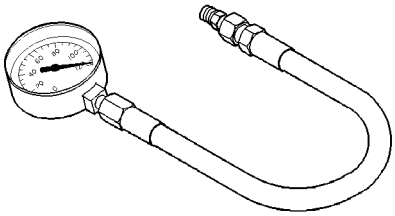

Oil Pressure Gauge C-3292

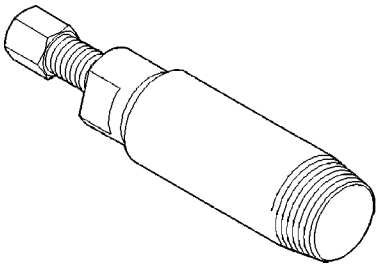

Remover, Crankshaft Front Seal 6341A

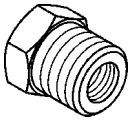

Adapter 8406

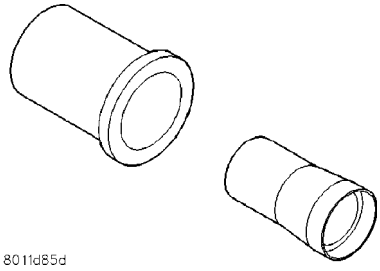

Installer, Crankshaft Front Seal C-4992

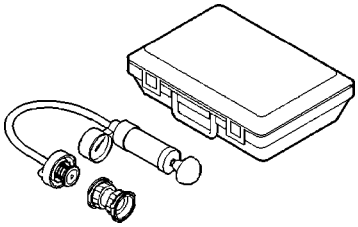

Cooling System Tester 7700

ENGINE 3.3/3.8L (Continued)

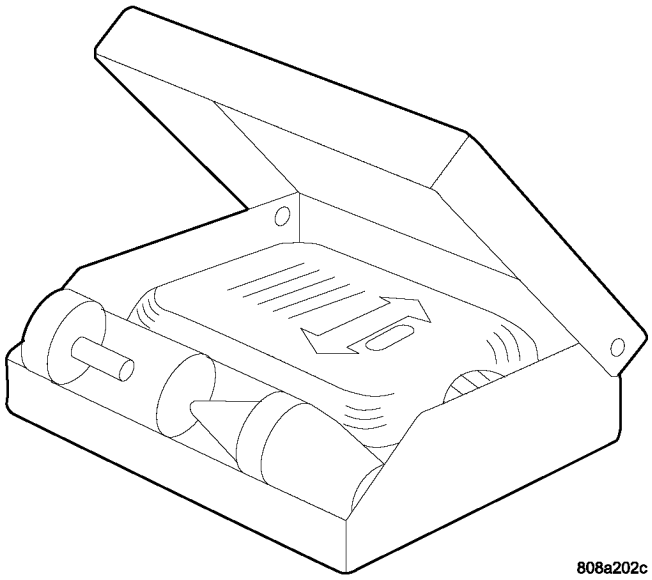

Combustion Leak Tester C-3685-A

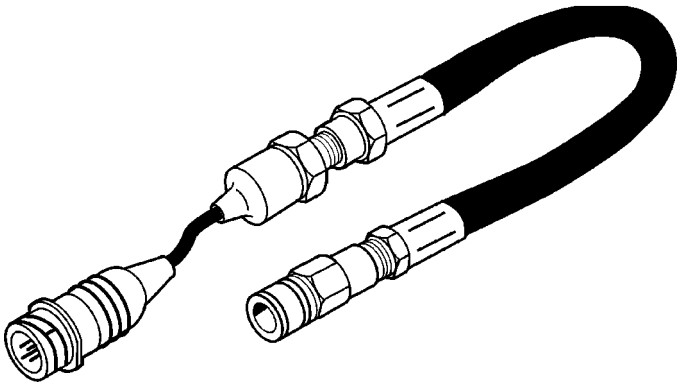

Pressure Transducer CH7059

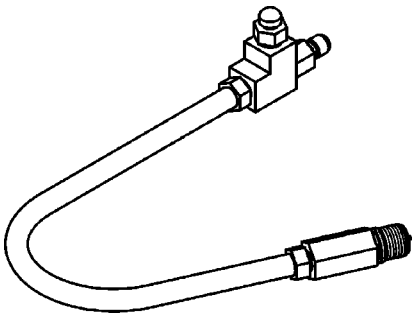

Compression Test Adapter 8116

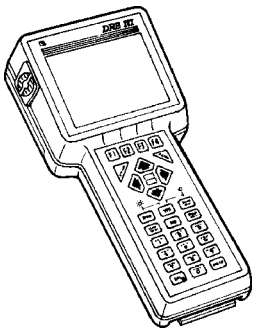

DRB III® with PEP Module OT-CH6010A

AIR CLEANER ELEMENT

REMOVAL

(1) Unsnap 2 clips.

(2) Lift cover and pull toward the engine and remove cover tabs from air box.

(3) Lift cover and remove the element (Fig. 15).

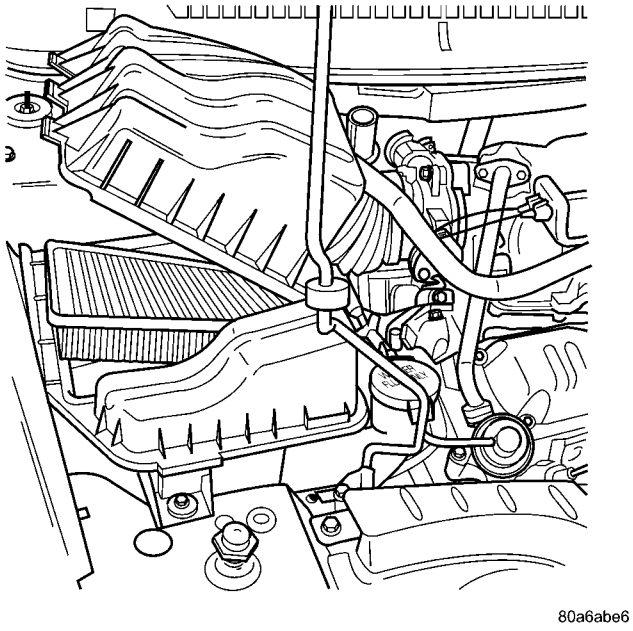

Fig. 15 AIR BOX COVER

INSTALLATION

(1) Install the air filter element into air box (Fig. 15).

(2) Move cover so that the tabs insert into the air box.

(3) Push cover down and snap the 2 clips.

AIR CLEANER HOUSING

REMOVAL

(1) Disconnect the negative battery cable.

AIR CLEANER HOUSING (Continued)

(2) Disconnect the inlet air temperature sensor (Fig. 16).

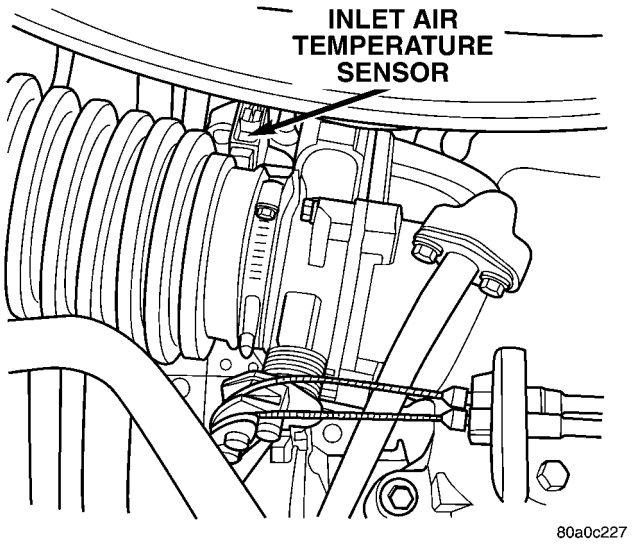

Fig. 16 Inlet Air Temperature Sensor

(3) Remove the inlet hose to throttle body.

(4) Remove the bolt for air box at upper radiator cross member.

(5) Pull air box up and off over the single locating pin.

(6) Remove air box from vehicle

INSTALLATION

(1) Install air box into vehicle and onto the locating pin.

(2) Install bolt to hold air box to the upper radiator cross member.

(3) Install the inlet hose to the throttle body.

(4) Connect the inlet air temperature sensor (Fig. 16).

(5) Connect the negative battery cable.

CYLINDER HEAD

DESCRIPTION

The aluminum cylinder heads (Fig. 17) are designed to create high flow combustion chambers to improve performance, while minimizing the change to the burn rate in the chamber. The cylinder head incorporates the combustion chamber. Two valves per-cylinder are used with inserted valve seats and guides. A multi-layer steel (MLS) type gasket is used between the cylinder head and engine block.

DIAGNOSIS AND TESTING—CYLINDER HEAD GASKET

A cylinder head gasket leak can be located between adjacent cylinders or between a cylinder and the adjacent water jacket.

Possible indications of the cylinder head gasket leaking between adjacent cylinders are:

- Loss of engine power
- Engine misfiring
- Poor fuel economy

Possible indications of the cylinder head gasket leaking between a cylinder and an adjacent water jacket are:

- Engine overheating
- Loss of coolant
- Excessive steam (white smoke) emitting from exhaust
- Coolant foaming

CYLINDER-TO-CYLINDER LEAKAGE TEST

To determine if an engine cylinder head gasket is leaking between adjacent cylinders, follow the procedures in Cylinder Compression Pressure Test (Refer to 9 - ENGINE - DIAGNOSIS AND TESTING). An engine cylinder head gasket leaking between adjacent cylinders will result in approximately a 50–70% reduction in compression pressure.

CYLINDER-TO-WATER JACKET LEAKAGE TEST

WARNING: USE EXTREME CAUTION WHEN THE ENGINE IS OPERATING WITH COOLANT PRESSURE CAP REMOVED.

VISUAL TEST METHOD

With the engine cool, remove the coolant pressure cap. Start the engine and allow it to warm up until thermostat opens.

If a large combustion/compression pressure leak exists, bubbles will be visible in the coolant.

COOLING SYSTEM TESTER METHOD

WARNING: WITH COOLING SYSTEM TESTER IN PLACE, PRESSURE WILL BUILD UP FAST. EXCESSIVE PRESSURE BUILT UP, BY CONTINUOUS ENGINE OPERATION, MUST BE RELEASED TO A SAFE PRESSURE POINT. NEVER PERMIT PRESSURE TO EXCEED 138 kPa (20 psi).

Install Cooling System Tester 7700 or equivalent to pressure cap neck. Start the engine and observe the tester's pressure gauge. If gauge pulsates with every power stroke of a cylinder a combustion pressure leak is evident.

CYLINDER HEAD (Continued)

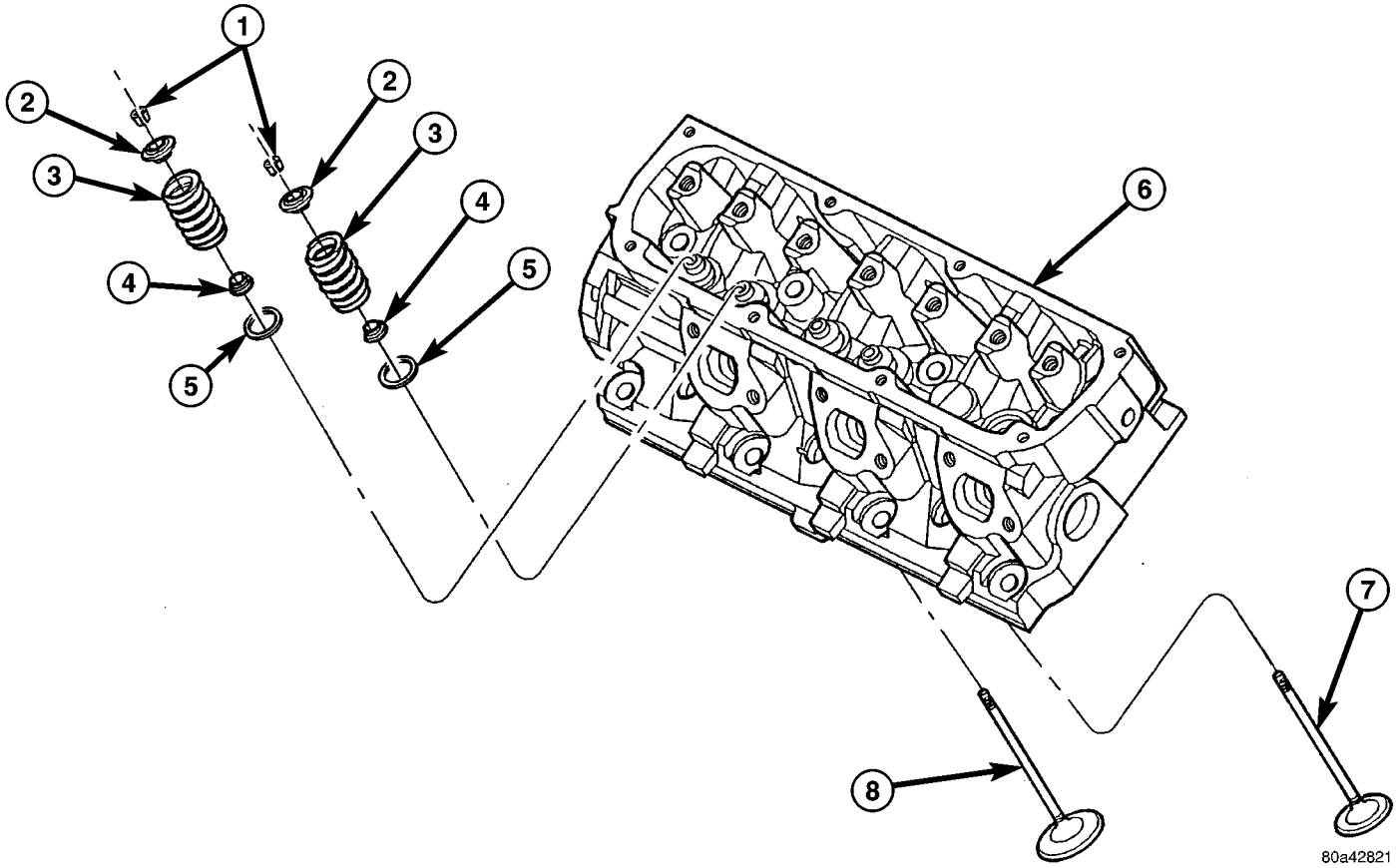

Fig. 17 Cylinder Head and Components

1 - VALVE LOCKS
2 - RETAINERS
3 - VALVE SPRINGS
4 - VALVE STEM SEALS
5 - SPRING SEATS
6 - CYLINDER HEAD
7 - VALVE - EXHAUST
8 - VALVE - INTAKE

CHEMICAL TEST METHOD

Combustion leaks into the cooling system can also be checked by using Bloc-Chek Kit C-3685-A or equivalent. Perform test following the procedures supplied with the tool kit.

REMOVAL - CYLINDER HEAD

(1) Drain the cooling system. (Refer to 7 - COOLING - STANDARD PROCEDURE)

(2) Disconnect negative cable from battery.

(3) Remove upper and lower intake manifolds. (Refer to 9 - ENGINE/MANIFOLDS/INTAKE MANIFOLD - REMOVAL)

WARNING: INTAKE MANIFOLD GASKET IS MADE OF VERY THIN METAL AND MAY CAUSE PERSONAL INJURY, HANDLE WITH CARE.

(4) Remove the cylinder head covers. (Refer to 9 - ENGINE/CYLINDER HEAD/CYLINDER HEAD COVER(S) - REMOVAL)

(5) Remove the spark plugs from cylinder head.

(6) Remove the dipstick and tube (Fig. 18).

(7) Remove exhaust manifold(s). (Refer to 9 - ENGINE/MANIFOLDS/EXHAUST MANIFOLD - REMOVAL)

(8) Remove rocker arm and shaft assemblies.(Refer to 9 - ENGINE/CYLINDER HEAD/ROCKER ARMS - REMOVAL) Remove push rods and **mark positions to ensure installation in original locations.**

(9) Remove the eight head bolts from each cylinder head and remove cylinder heads (Fig. 22).

CLEANING

To ensure engine gasket sealing, proper surface preparation must be performed, especially with the use of aluminum engine components and multi-layer steel cylinder head gaskets.

NOTE: Multi-Layer Steel (MLS) head gaskets require a scratch free sealing surface.

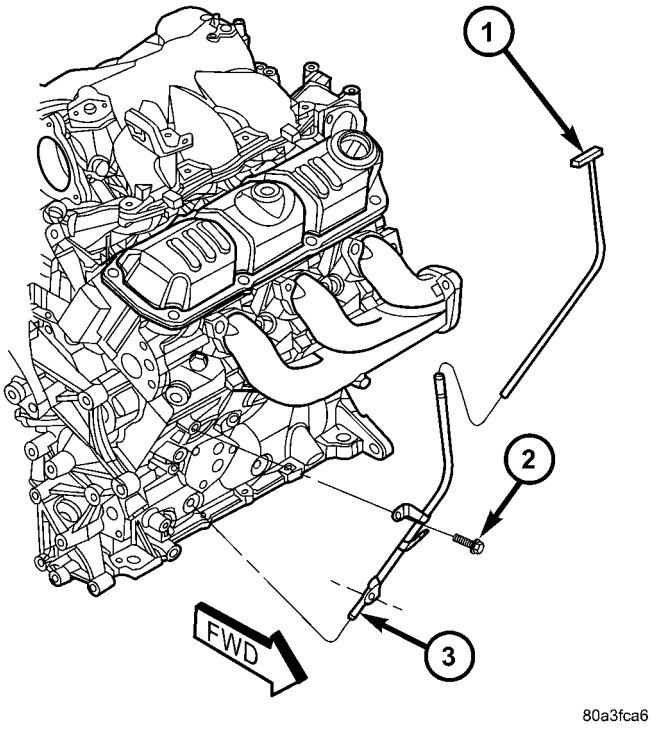

Fig. 18 DIPSTICK & TUBE

1 - DIPSTICK
2 - BOLT
3 - TUBE

Remove all gasket material from cylinder head and block (Refer to 9 - ENGINE - STANDARD PROCEDURE). Be careful not to gouge or scratch the aluminum head sealing surface.

Clean all engine oil passages.

INSPECTION

(1) Before cleaning, check for leaks, damage and cracks.

(2) Clean cylinder head and oil passages.

(3) Check cylinder head for flatness (Fig. 19).

(4) Cylinder head must be flat within:

- Standard dimension = less than 0.05 mm (0.002 inch.)
- Service Limit = 0.2 mm (0.008 inch.)
- Grinding Limit = Maximum of 0.2 mm (0.008 inch.) is permitted.

CAUTION: 0.20 mm (0.008 in.) MAX is a combined total dimension of the stock removal limit from cylinder head and block top surface (Deck) together.

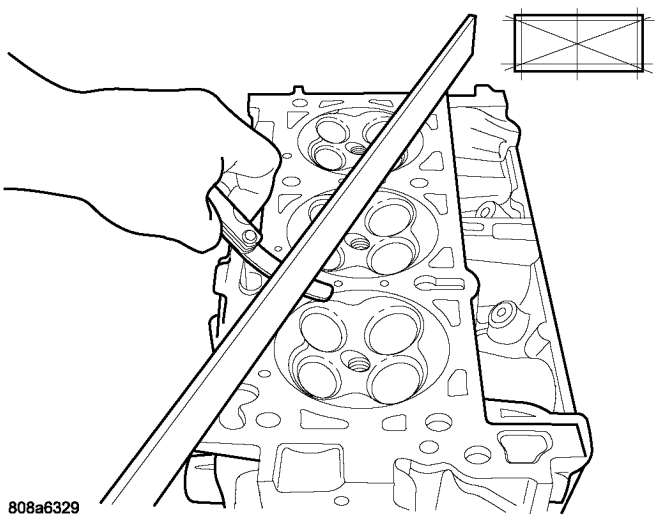

Fig. 19 Checking Cylinder Head Flatness—Typical

INSTALLATION - CYLINDER HEAD

(1) Clean all sealing surfaces of engine block and cylinder heads. (Refer to 9 - ENGINE - STANDARD PROCEDURE)

(2) Position new gasket(s) on engine block (Fig. 20). The left bank gasket is identified with the “L” stamped in the exposed area of the gasket located at front of engine (shown in (Fig. 20)). The right bank gasket is identified with a “R” stamped in the exposed area of the gasket also, but is located at the rear of the engine.

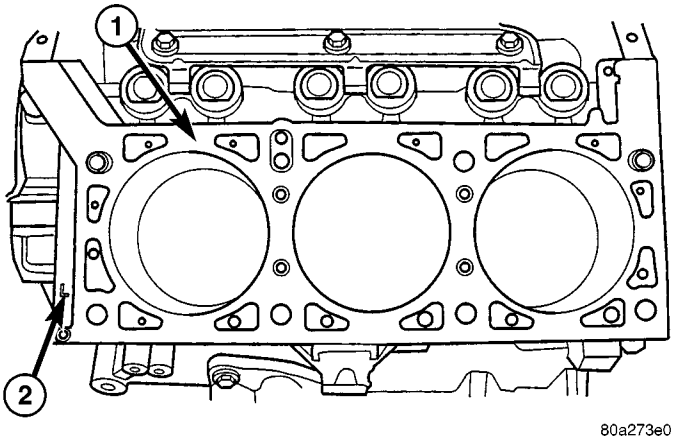

Fig. 20 Head Gasket Installation

1 - CYLINDER HEAD GASKET
2 - LOCATION IDENTIFICATION (L = LEFT BANK, R = RIGHT BANK)

(3) **The cylinder head bolts are torqued using the torque yield method, they should be examined BEFORE reuse. If the threads are necked down, the bolts must be replaced** (Fig. 21).

CYLINDER HEAD (Continued)

(4) Necking can be checked by holding a scale or straight edge against the threads. If all the threads do not contact the scale the bolt should be replaced.

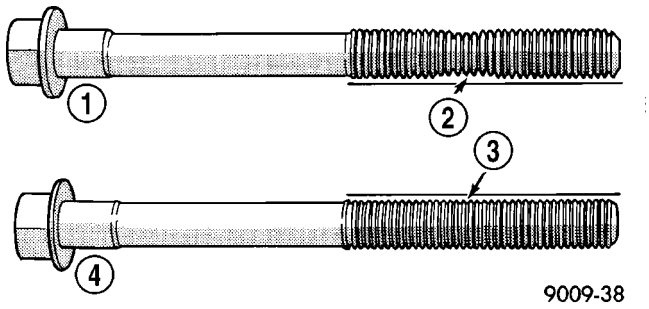

Fig. 21 Checking Bolts for Stretching (Necking)

1 - STRETCHED BOLT
2 - THREADS ARE NOT STRAIGHT ON LINE
3 - THREADS ARE STRAIGHT ON LINE
4 - UNSTRETCHED BOLT

(5) Tighten the cylinder head bolts 1–8 in the sequence shown in (Fig. 22). Using the 4 step torque turn method, tighten according to the following values:

- Step 1: Bolts 1 – 8 to 61 N·m (45 ft. lbs.)
- Step 2: Bolts 1 – 8 to 88 N·m (65 ft. lbs.)
- Step 3: Bolts 1 – 8 (again) to 88 N·m (65 ft. lbs.)
- Step 4: Bolts 1 – 8 turn an additional 1/4 Turn. **(Do not use a torque wrench for this step.)**

NOTE: Bolt torque after 1/4 turn should be over 122 N·m (90 ft. lbs.). If not, replace the bolt.

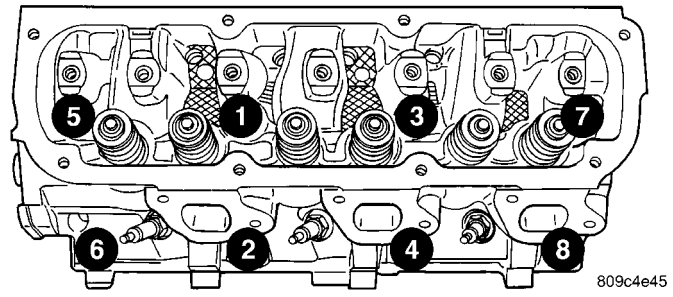

Fig. 22 CYLINDER HEAD TIGHTENING SEQUENCE

(6) Inspect push rods and replace worn or bent rods.

(7) Install the push rods.

(8) Install the rocker arm and shaft assemblies. (Refer to 9 - ENGINE/CYLINDER HEAD/ROCKER ARMS - INSTALLATION)

(9) Install the cylinder head covers. (Refer to 9 - ENGINE/CYLINDER HEAD/CYLINDER HEAD COVER(S) - INSTALLATION)

(10) Install the exhaust manifolds. (Refer to 9 - ENGINE/MANIFOLDS/EXHAUST MANIFOLD - INSTALLATION)

(11) Install new O-ring on dipstick tube. Install dipstick tube assembly (Fig. 18).

(12) Install the spark plugs.

(13) Install upper and lower intake manifolds. (Refer to 9 - ENGINE/MANIFOLDS/INTAKE MANIFOLD - INSTALLATION)

(14) Fill the cooling system. (Refer to 7 - COOLING - STANDARD PROCEDURE)

(15) Connect negative cable to battery.

CYLINDER HEAD COVER(S)

DESCRIPTION

The cylinder head covers are made of stamped steel. The covers are sealed with steel reinforced silicon rubber gaskets. The cylinder head cover uses rubber isolators at each fastener location (Fig. 23).

NOTE: Due to the tight packaging near the cylinder head covers, which makes spill clean-up difficult, a spill during an engine oil change may be misinterpreted as an oil leak. When investigating an oil leak in the location of the cylinder head covers and intake manifold, follow the procedure found in Oil Leak Diagnosis (Refer to 9 - ENGINE - DIAGNOSIS AND TESTING) for determining the source of a leak.

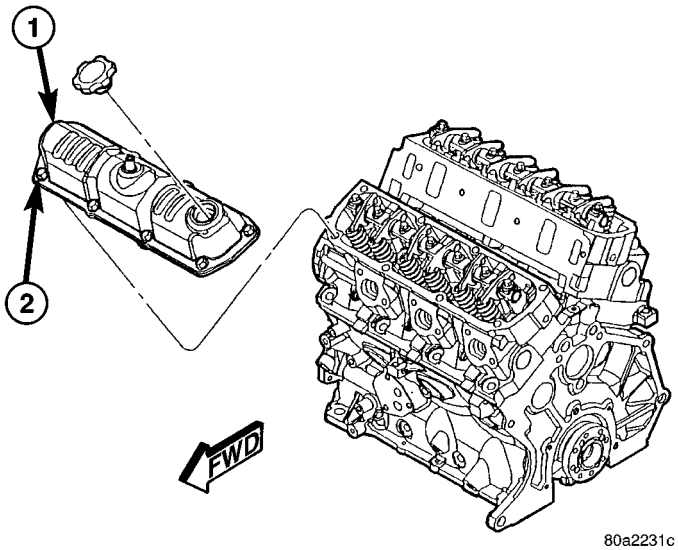

Fig. 23 Cylinder Head Cover

1 - CYLINDER HEAD COVER
2 - BOLT

CYLINDER HEAD COVER - RIGHT

REMOVAL

(1) Disconnect negative cable from battery.
(2) Remove the wiper module. (Refer to 8 - ELECTRICAL/WIPERS/WASHERS/WIPER MODULE - REMOVAL)
(3) Disconnect spark plug wires from plugs.
(4) Disconnect PCV hose from cylinder head cover (Fig. 24).
(5) Remove cylinder head cover bolts.
(6) Remove cylinder head cover and gasket (Fig. 23).

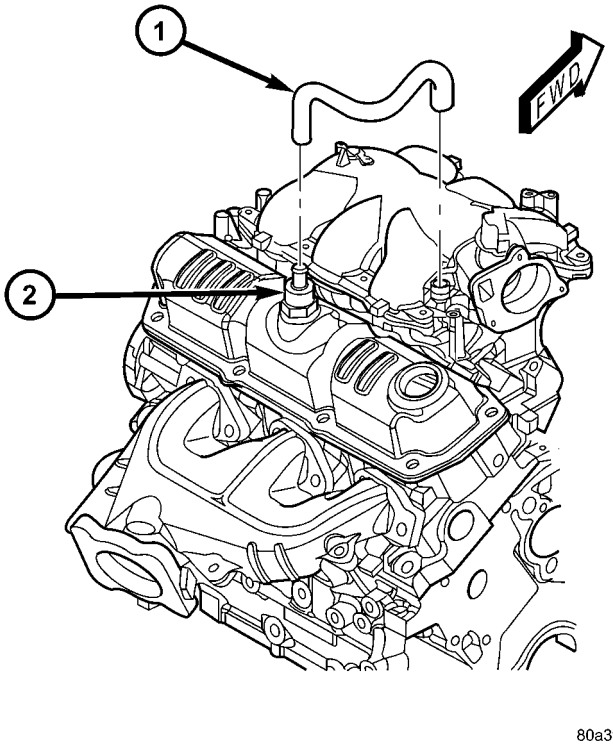

Fig. 24 PCV Hose

1 - HOSE - PCV
2 - PCV VALVE

INSTALLATION

(1) Clean cylinder head and cover mating surfaces. Inspect cylinder head cover surface for flatness. Replace gasket as necessary.
(2) Inspect seal on the cover bolt for wear or damage (Fig. 25). Replace bolt assembly as necessary.

NOTE: The cylinder head cover bolts contain a torque limiter sleeve and a seal (Fig. 25). The seal and torque sleeve is replaced with the bolt.

(3) Assemble gasket to cylinder cover by inserting the bolt assemblies through each bolt hole on the cover and gasket (Fig. 25).

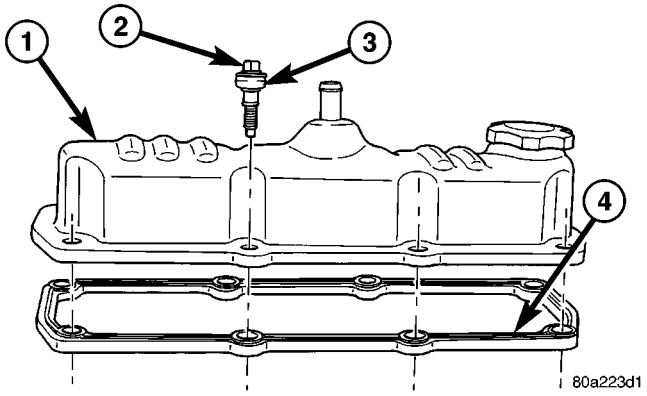

Fig. 25 CYLINDER HEAD COVER GASKET

1 - CYLINDER HEAD COVER
2 - BOLT
3 - SEAL (SERVICED WITH BOLT)
4 - GASKET

(4) Install cylinder head cover and bolts (Fig. 26).
(5) Tighten cylinder head cover bolts to 12 N·m (105 in. lbs.) (Fig. 26).

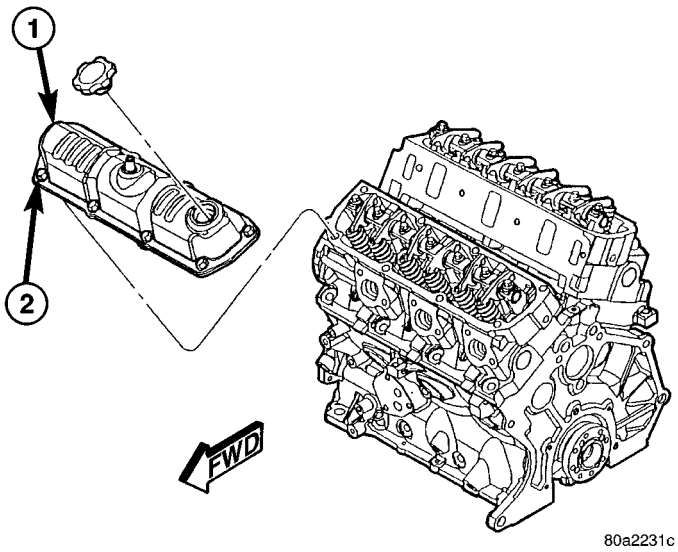

Fig. 26 Cylinder Head Cover

1 - CYLINDER HEAD COVER
2 - BOLT

(6) Connect PCV hose to cylinder head cover.
(7) Connect spark plug wires to spark plugs.
(8) Install wiper module. (Refer to 8 - ELECTRICAL/WIPERS/WASHERS/WIPER MODULE - INSTALLATION)
(9) Connect negative cable to battery.

CYLINDER HEAD COVER - LEFT

REMOVAL

(1) Disconnect spark plug wires from spark plugs.
(2) Disconnect crankcase vent hose from cylinder head cover.
(3) Remove cylinder head cover bolts.
(4) Remove cylinder head cover and gasket.

INSTALLATION

(1) Clean cylinder head and cover mating surfaces. Inspect cylinder head cover surface for flatness. Replace gasket as necessary.
(2) Assemble gasket to cylinder cover by inserting the fasteners through each bolt hole on cover and gasket (Fig. 25).
(3) Install the cylinder head cover and bolts (Fig. 26).
(4) Tighten cylinder head cover bolts to 12 N·m (105 in. lbs.) (Fig. 26).
(5) Connect crankcase vent hose.
(6) Connect spark plug wires to spark plugs.

INTAKE/EXHAUST VALVES & SEATS

DESCRIPTION

The valves have chrome plated valve stems with four-bead lock grooves. The valve stem seals are made of Viton rubber.

OPERATION

The two valves per cylinder are opened using hydraulic lifters, push rods, and rocker arms.

STANDARD PROCEDURE - REFACING VALVES AND VALVE SEATS

The intake and exhaust valves and seats are machined to specific angles (Fig. 27).

VALVES

(1) Inspect the remaining margin after the valves are refaced (Fig. 28). (Refer to 9 - ENGINE - SPECIFICATIONS)

VALVE SEATS

CAUTION: Remove metal from valve seat only. Do not remove material from cylinder head (Fig. 29).

(1) When refacing valve seats, it is important that the correct size valve guide pilot be used for reseating stones. A true and complete surface must be obtained.

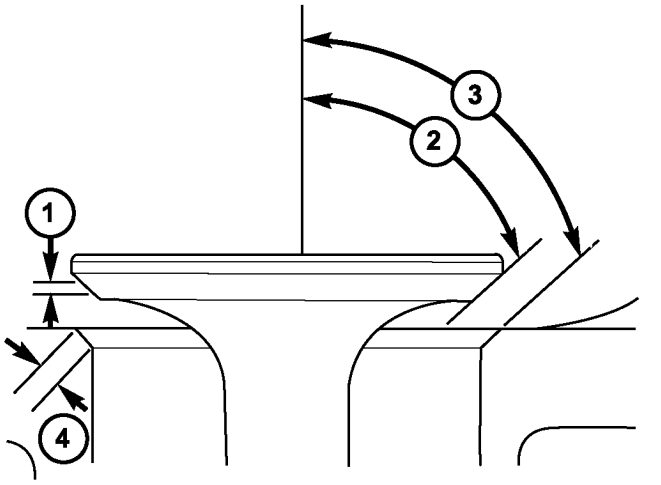

Fig. 27 VALVE FACE AND SEAT

1 - VALVE FACE WIDTH
2 - VALVE FACE ANGLE
3 - SEAT ANGLE
4 - SEAT CONTACT AREA

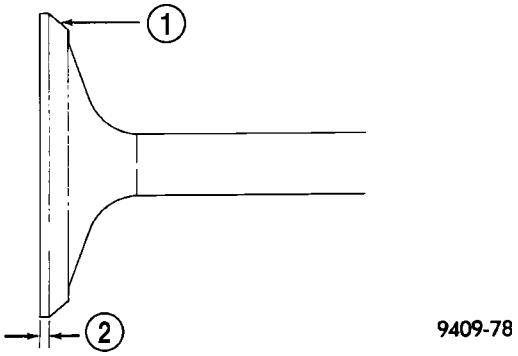

Fig. 28 Valve Margin

1 - VALVE FACE
2 - VALVE MARGIN

(2) Measure the concentricity of valve seat using dial indicator (Fig. 30). Total runout should not exceed 0.051 mm (0.002 in.) total indicator reading.
(3) Inspect the valve seat using Prussian blue to determine where the valve contacts the seat. To do this, coat valve seat **LIGHTLY**with Prussian blue then set valve in place. Rotate the valve with light pressure. If the blue is transferred to the center of valve face, contact is satisfactory. If the blue is transferred to top edge of valve face, lower valve seat with a 15 degree stone. If the blue is transferred to the bottom edge of valve face raise valve seat with a 65 degrees stone.

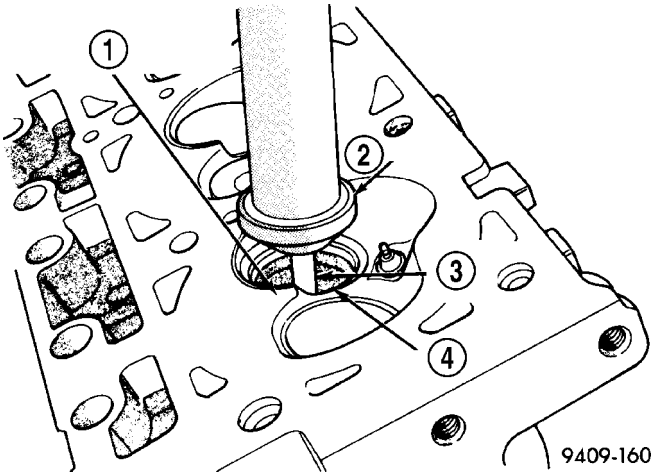

Fig. 29 Refacing Valve Seats

1 - REFACING STONE MUST NOT CUT INTO CYLINDER HEAD
2 - STONE
3 - PILOT
4 - SEAT

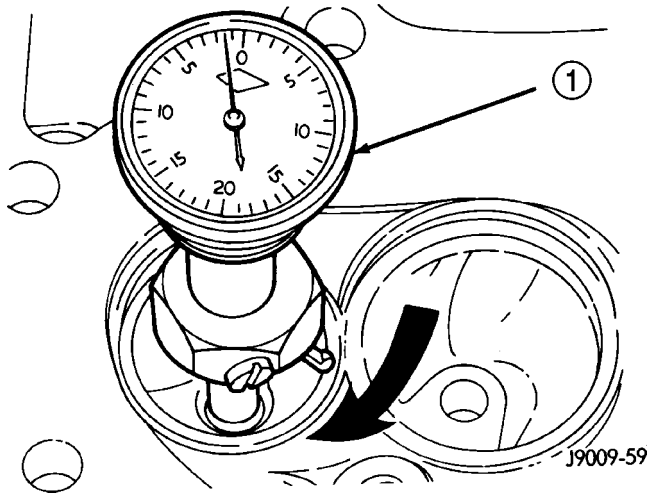

Fig. 30 Measurement of Valve Seat Runout

1 - DIAL INDICATOR

NOTE: Valve seats which are worn or burned can be reworked, provided that correct angle and seat width are maintained. Otherwise cylinder head must be replaced.

(4) When seat is properly positioned the width of intake and exhaust seats should be 1.50–2.00 mm (0.059–0.078 in.) (Fig. 27).

(5) After grinding the valve seats or faces, install the valve in cylinder head and check valve installed height by measuring from valve tip to spring seat (Fig. 31). Remove valve from cylinder head and grind valve tip until within specifications. Check valve tip for scoring. The tip chamfer should be reground (if necessary) to prevent seal damage when the valve is installed.

(6) Check the valve spring installed height after refacing the valve and seat (Fig. 31).

If valves and/or seats are reground, measure the installed height of springs (Fig. 31), make sure measurements are taken from top of spring seat to the bottom surface of spring retainer. If height is greater than specifications, install a 0.794 mm (0.0312 in.) spacer in head counterbore to bring spring height back within specifications.

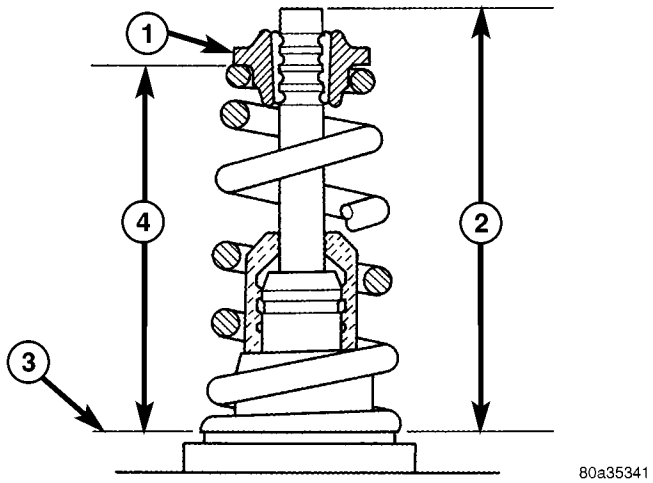

Fig. 31 Checking Valve and Spring Installed Height

1 - SPRING RETAINER
2 - VALVE INSTALLED HEIGHT* - 48.1–49.7 mm (1.89–1.95 in.)
3 - CYINDER HEAD SURFACE
4 - SPRING INSTALLED HEIGHT* - 41.1–42.7 mm (1.61–1.68 in.)
*(MEASURED FROM TOP OF SPRING SEAT)

REMOVAL

(1) With cylinder head removed, compress valve springs using Valve Spring Compressor Tool C-3422-D with adapter 8464 (Refer to 9 - ENGINE - SPECIAL TOOLS).

(2) Remove valve retaining locks.

(3) Slowly release valve spring compressor. Remove valve spring retainer, valve spring, and valve stem seal.

(4) Before removing valves, **remove any burrs from valve stem lock grooves to prevent damage to the valve guides.** Identify valves to insure installation in original location.

CLEANING

(1) Clean all valves thoroughly and discard burned, warped and cracked valves.

INSPECTION

VALVES

(1) Clean and inspect valves thoroughly. Replace burned, warped and cracked valves.

INTAKE/EXHAUST VALVES & SEATS (Continued)

(2) Measure valve stems for wear (Fig. 32). For valve specifications, (Refer to 9 - ENGINE - SPECIFICATIONS).

NOTE: Valve stems are chrome plated and should not be polished (Fig. 32).

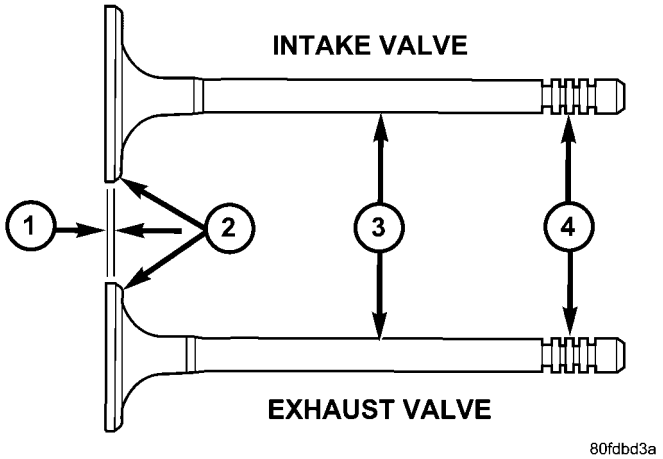

Fig. 32 Intake and Exhaust Valves

1 - MARGIN
2 - FACE
3 - STEM
4 - VALVE SPRING RETAINER LOCK GROOVES

VALVE GUIDES

(1) Remove carbon and varnish deposits from inside of valve guides with a reliable guide cleaner.

(2) Measure valve stem-to-guide clearance as follows:

(3) Install valve into cylinder head so it is 15 mm (0.590 inch.) off the valve seat. A small piece of hose may be used to hold valve in place.

(4) Attach dial indicator Tool C-3339 to cylinder head and set it at right angle of valve stem being measured (Fig. 33).

(5) Move valve to and from the indicator. For clearance specifications, (Refer to 9 - ENGINE - SPECIFICATIONS).

NOTE: Replace cylinder head if stem-to-guide clearance exceeds specifications, or if guide is loose in cylinder head.

INSTALLATION

(1) Coat valve stems with clean engine oil and insert them in cylinder head.

(2) Install valve spring seat on head (Fig. 35).

(3) Install new seals on all valve stems and over valve guides (Fig. 35). Install valve springs and valve retainers (Fig. 35).

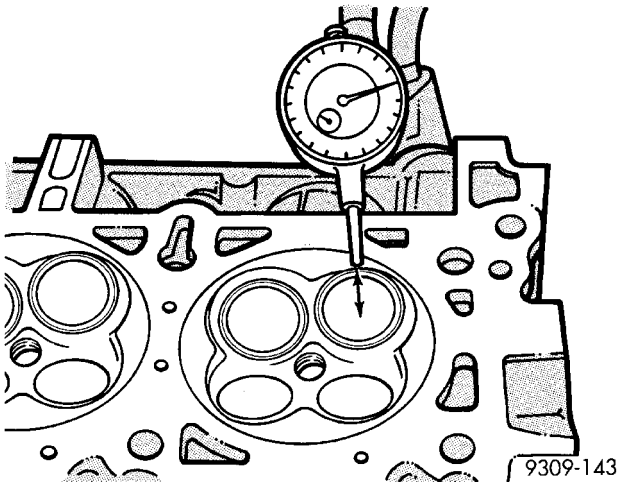

Fig. 33 Measuring Valve Guide Wear - Typical

(4) Install the valve springs. (Refer to 9 - ENGINE/CYLINDER HEAD/VALVE SPRINGS - INSTALLATION)

VALVE SPRINGS

DESCRIPTION

There are two interchangeable, floating (spring rotates during operation), valve spring designs. Type A may be identified by the counterclockwise (spring spirals down and to the left) appearance, And Type B may be identified by the clockwise (spring spirals down and to the right) appearance. Both of the valve springs are a bee-hive shaped design but have different specifications (Fig. 34). The springs are seated on a steel washer on the cylinder head with retainers and locks retaining the springs (Fig. 35). The springs are installed with the smaller diameter against spring retainer (Fig. 34).

OPERATION

The valve spring returns the valve against its seat for a positive seal of the combustion chamber.

REMOVAL

REMOVAL - CYLINDER HEAD OFF

(1) With the cylinder head on a bench, position Special Tool C-3422-D with 8464 Adapter on the valve and spring retainer (Fig. 36).

(2) Compress the spring only enough to remove the valve retainer locks.

(3) Slowly release the spring tension and remove the valve spring and retainer.

(4) For removal of the valve stem seal (Refer to 9 - ENGINE/CYLINDER HEAD/VALVE STEM SEALS - REMOVAL).

VALVE SPRINGS (Continued)

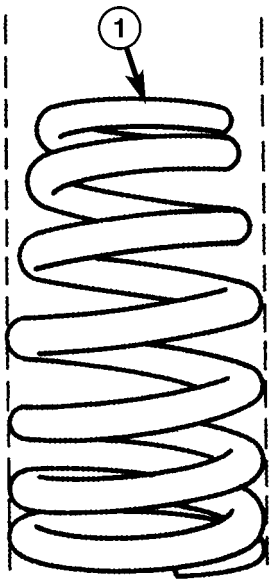

Fig. 34 Valve Spring - Type A

1 - VALVE SPRING (TOP - SMALLER DIAMETER)

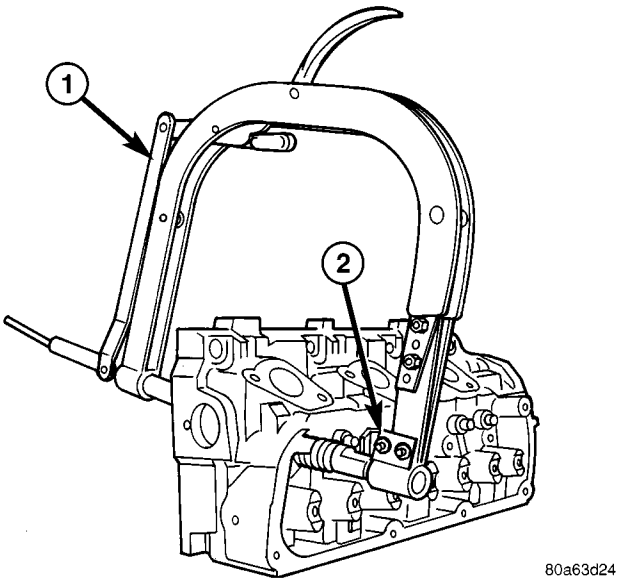

Fig. 36 VALVE SPRING - REMOVE/INSTALL

1 - SPECIAL TOOL C-3422-D SPRING COMPRESSOR
2 - SPECIAL TOOL 8464 ADAPTER

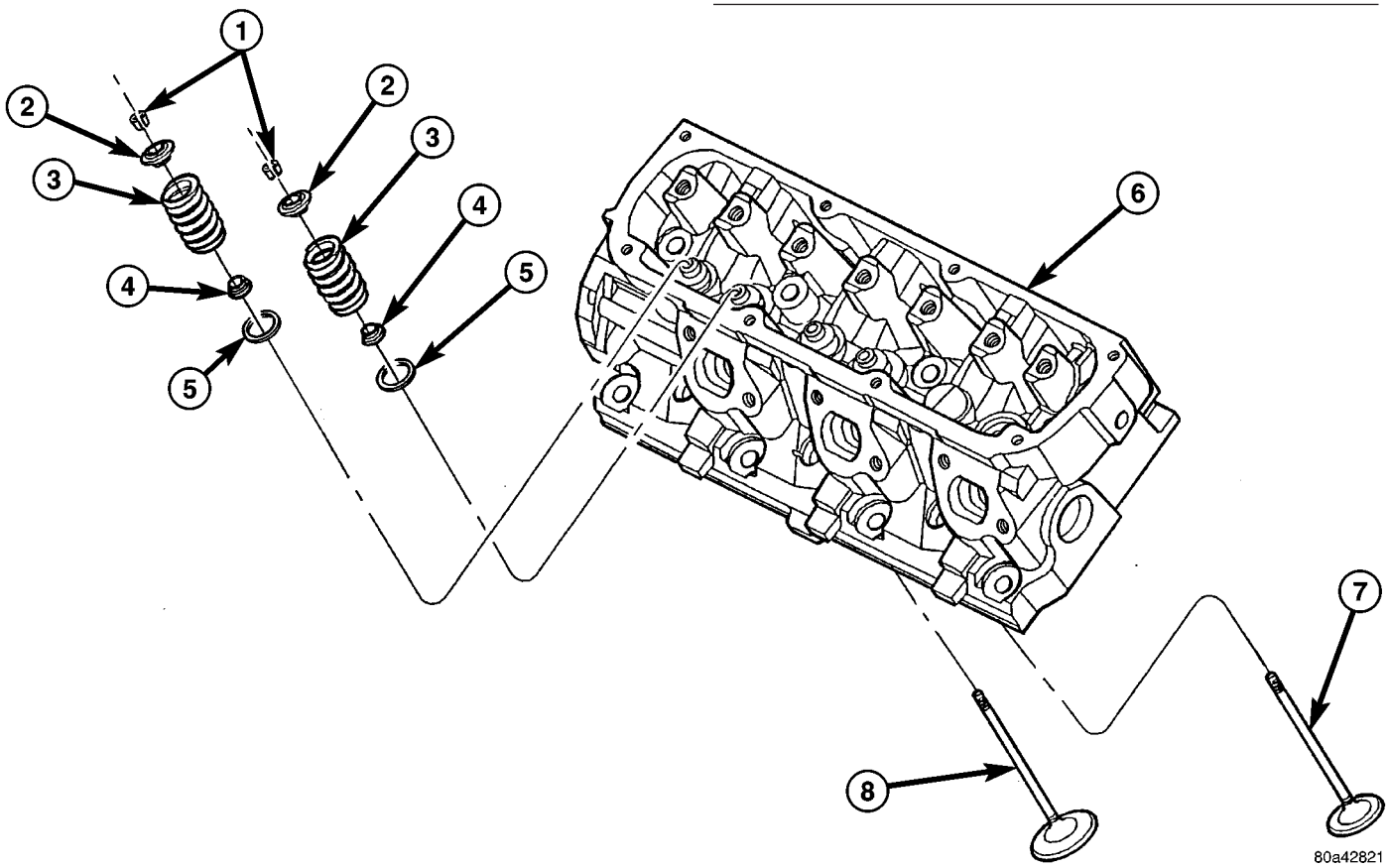

Fig. 35 VALVE COMPONENTS

1 - VALVE LOCKS
2 - RETAINERS
3 - VALVE SPRINGS
4 - VALVE STEM SEALS
5 - SPRING SEATS
6 - CYLINDER HEAD
7 - VALVE - EXHAUST
8 - VALVE - INTAKE

VALVE SPRINGS (Continued)

REMOVAL - CYLINDER HEAD ON

(1) Disconnect negative cable from battery.
(2) Remove spark plug wires and all spark plugs.
(3) Remove cylinder head cover(s). (Refer to 9 - ENGINE/CYLINDER HEAD/CYLINDER HEAD COVER(S) - REMOVAL)
(4) Remove rocker arms and shaft. (Refer to 9 - ENGINE/CYLINDER HEAD/ROCKER ARMS - REMOVAL)
(5) Rotate engine until the piston in the cylinder bore requiring spring removal is at TDC.
(6) Install Special Tool 8453 to the cylinder head (Fig. 37). Tighten the attaching bolts to 23 N·m (200 in. lbs.).
(7) Install a spark plug adapter in the spark plug hole. Connect air hose that can supply 620.5–689 kPa (90–100 psi) of air pressure to adapter. This is to hold valves in place while servicing components.
(8) Locate the forcing screw and spring retainer adapter assembly over the spring requiring removal (Fig. 37).
(9) Slowly turn the forcing screw clockwise (compressing the valve spring) until the valve keepers can be removed.
(10) Turn forcing screw counterclockwise to relieve spring tension. Remove retainer and valve spring.
(11) Repeat procedure for each cylinder requiring valve spring removal.

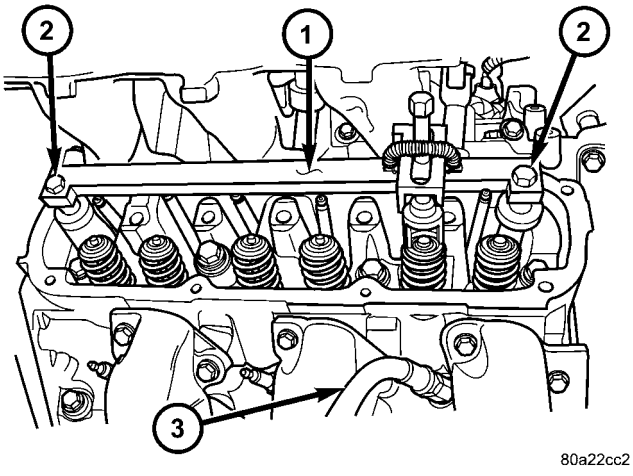

Fig. 37 VALVE SPRING - REMOVE/INSTALL (HEAD ON)

1 - SPECIAL TOOL 8453
2 - BOLTS - SPECIAL TOOL ATTACHING
3 - AIR SUPPLY HOSE ADAPTER

INSPECTION

NOTE: The are two different types of valve springs used that are interchangable, but have different specifications(Refer to 9 - ENGINE/CYLINDER HEAD/VALVE SPRINGS - DESCRIPTION).

Whenever valves have been removed for inspection, reconditioning or replacement, valve springs should be tested (Fig. 38). **As an example;** the compression length of a spring to be tested is 38.00 mm (1.496 in.). Turn the table of Tool C-647 until surface is in line with the 38.00 mm (1.496 in.) mark on the threaded stud and the zero mark on the front. Place spring over stud on the table and lift compressing lever to set tone device. Pull on torque wrench until ping is heard. Take reading on torque wrench at this instant. Multiply this reading by two. This will give the spring load at test length. Fractional measurements are indicated on the table for finer adjustments. Refer to Engine Specifications to obtain specified height and allowable tensions (Refer to 9 - ENGINE - SPECIFICATIONS). Replace any springs that do not meet specifications.

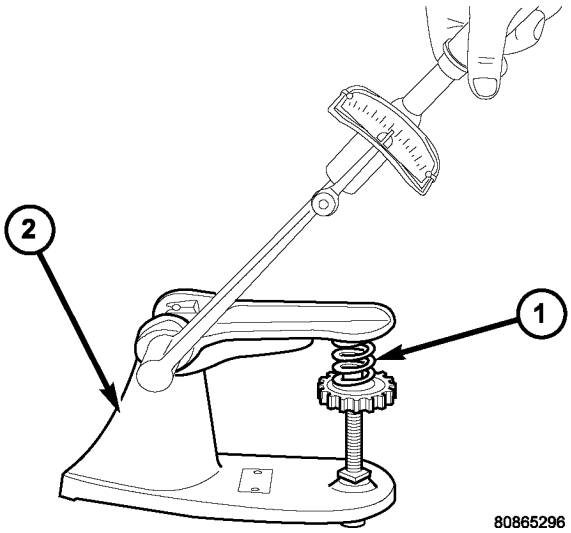

Fig. 38 TESTING VALVE SPRING

1 - SPECIAL TOOL C-647

INSTALLATION

INSTALLATION - CYLINDER HEAD OFF

(1) If removed, install a new valve stem seal (Refer to 9 - ENGINE/CYLINDER HEAD/VALVE STEM SEALS - INSTALLATION).
(2) Position valve spring and retainer on spring seat.
(3) Using Special Tool C-3422-D with 8464 Adapter (Fig. 36), compress the spring only enough to install the valve retainer locks. Install valve retainer locks.
(4) Slowly release the spring tension. Ensure the retainer locks are seated properly (Fig. 39).

INSTALLATION - CYLINDER HEAD ON

(1) The intake valve stem seals should be pushed firmly and squarely over the valve guide using the

VALVE SPRINGS (Continued)

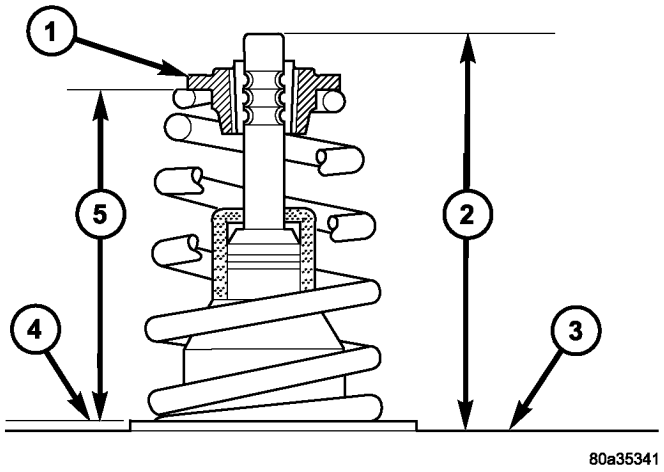

Fig. 39 VALVE SPRING INSTALLED

1 - VALVE SPRING RETAINER
2 - VALVE INSTALLED HEIGHT
3 - CYLINDER HEAD SURFACE
4 - VALVE SPRING SEAT SURFACE
5 - VALVE SPRING INSTALLED HEIGHT

valve stem as guide. **Do Not Force** seal against top of guide. When installing the valve retainer locks, compress the spring **only enough** to install the locks (Fig. 39).

CAUTION: Do not pinch seal between retainer and top of valve guide.

(2) Follow the same procedure on the remaining 5 cylinders using the firing sequence 1-2-3-4-5-6. **Make sure piston in cylinder is at TDC on the valve spring that is being covered.**

(3) Remove spark plug adapter tool.

(4) Install rocker arms and shaft assembly. (Refer to 9 - ENGINE/CYLINDER HEAD/ROCKER ARMS - INSTALLATION)

(5) Install cylinder head covers. (Refer to 9 - ENGINE/CYLINDER HEAD/CYLINDER HEAD COVER(S) - INSTALLATION)

(6) Install spark plugs and connect wires.

(7) Connect negative cable to battery.

ROCKER ARMS

DESCRIPTION

DESCRIPTION - ROCKER ARMS

The rocker arms are installed on the rocker arm shaft. The rocker arms and shaft assembly is attached to the cylinder head with seven billeted bolts and retainers. The rocker arms are made of stamped steel.

DESCRIPTION - PUSHRODS

The pushrods are made of steel and are a hollow design. The pushrods are positioned between the hydraulic lifter and the rocker arm.

OPERATION

OPERATION - ROCKER ARMS

The rocker arm pivots on the rocker shaft. Rocker arms are used to translate up and down motions provided by the camshaft, hydraulic lifter, and pushrod on one end, into a down and up motions on the valve stem on the opposing end.

OPERATION - PUSHRODS

The pushrod is a solid link between the hydraulic lifter and the rocker arm. Also, the pushrod supplies engine oil from the hydraulic lifter to the rocker arm.

REMOVAL - ROCKER ARMS AND SHAFT

(1) Remove the cylinder head cover(s). (Refer to 9 - ENGINE/CYLINDER HEAD/CYLINDER HEAD COVER(S) - REMOVAL)

NOTE: Rocker arm shaft bolts are captured to the shaft.

(2) Loosen the rocker shaft bolts (Fig. 40), rotating one turn each, until all valve spring pressure is relieved.

(3) Remove the rocker arms and shaft assembly (Fig. 40).

(4) For rocker arm disassembly procedures, (Refer to 9 - ENGINE/CYLINDER HEAD/ROCKER ARMS - DISASSEMBLY).

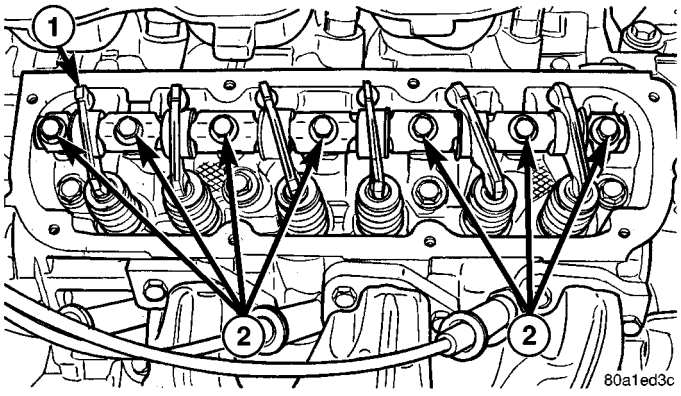

Fig. 40 ROCKER ARMS AND SHAFT

1 - ROCKER ARMS AND SHAFT ASSEMBLY
2 - ROCKER SHAFT BOLTS

ROCKER ARMS (Continued)

DISASSEMBLY - ROCKER ARMS AND SHAFT

CAUTION: Do not attempt to drive the billeted bolt from the rocker shaft. This can damage the rocker arm retainer and bolt assembly.

(1) Remove the rocker arm retainer and bolt by performing the following procedure:

(a) Using adjustable pliers, grip the edges of the retainer (Fig. 41).

(b) Apply an upward force with a slight rocking motion until the retainer disengages from shaft (Fig. 41).

(2) Remove rocker arms (Fig. 42). Identify the component locations for reassembly in original locations.

ASSEMBLY - ROCKER ARMS AND SHAFT

(1) Install rocker arms on the shaft (Fig. 42). Install in the orginal positions if re-used. **Ensure** the rocker shaft, all the retainers and washers are properly positioned and installed in the correct locations (Fig. 42).

(2) Install rocker arms and shaft to the cylinder head. (Refer to 9 - ENGINE/CYLINDER HEAD/ ROCKER ARMS - INSTALLATION)

INSTALLATION - ROCKER ARMS AND SHAFT

CAUTION: Ensure the longer shaft retaining bolt is installed in the proper location on the rocker shaft. (Refer to 9 - ENGINE/CYLINDER HEAD/ROCKER ARMS - ASSEMBLY)

(1) Position the rocker arm and shaft assemblies on the pedestal mounts.

CAUTION: Ensure all pushrods are properly located on the lifter and the rocker arm socket.

(2) Align each rocker arm socket with each pushrod end.

CAUTION: The rocker arm shaft should be tightened down slowly, starting with the center bolts. Allow 20 minutes lifter bleed down time after installation of the rocker shafts before engine operation.

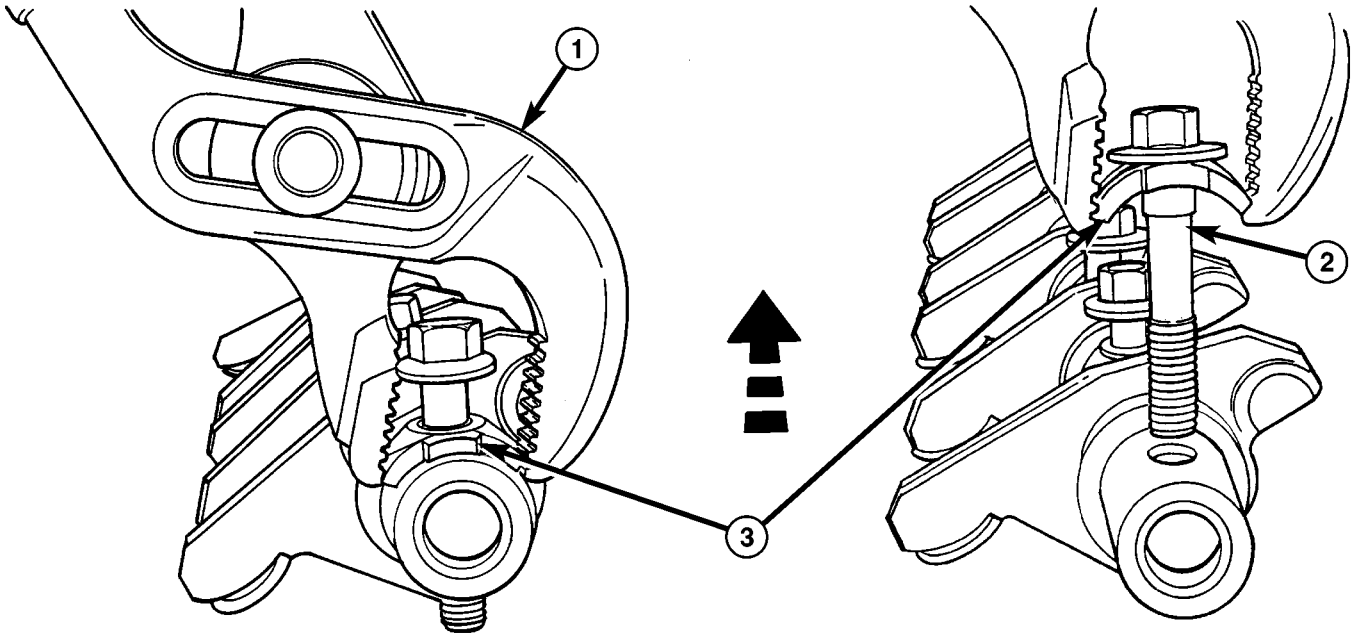

80a1ec81

Fig. 41 ROCKER ARM RETAINER - REMOVAL

1 - ADJUSTABLE PLIERS
2 - BILLETED ROCKER SHAFT BOLT
3 - ROCKER ARM RETAINER

ROCKER ARMS (Continued)

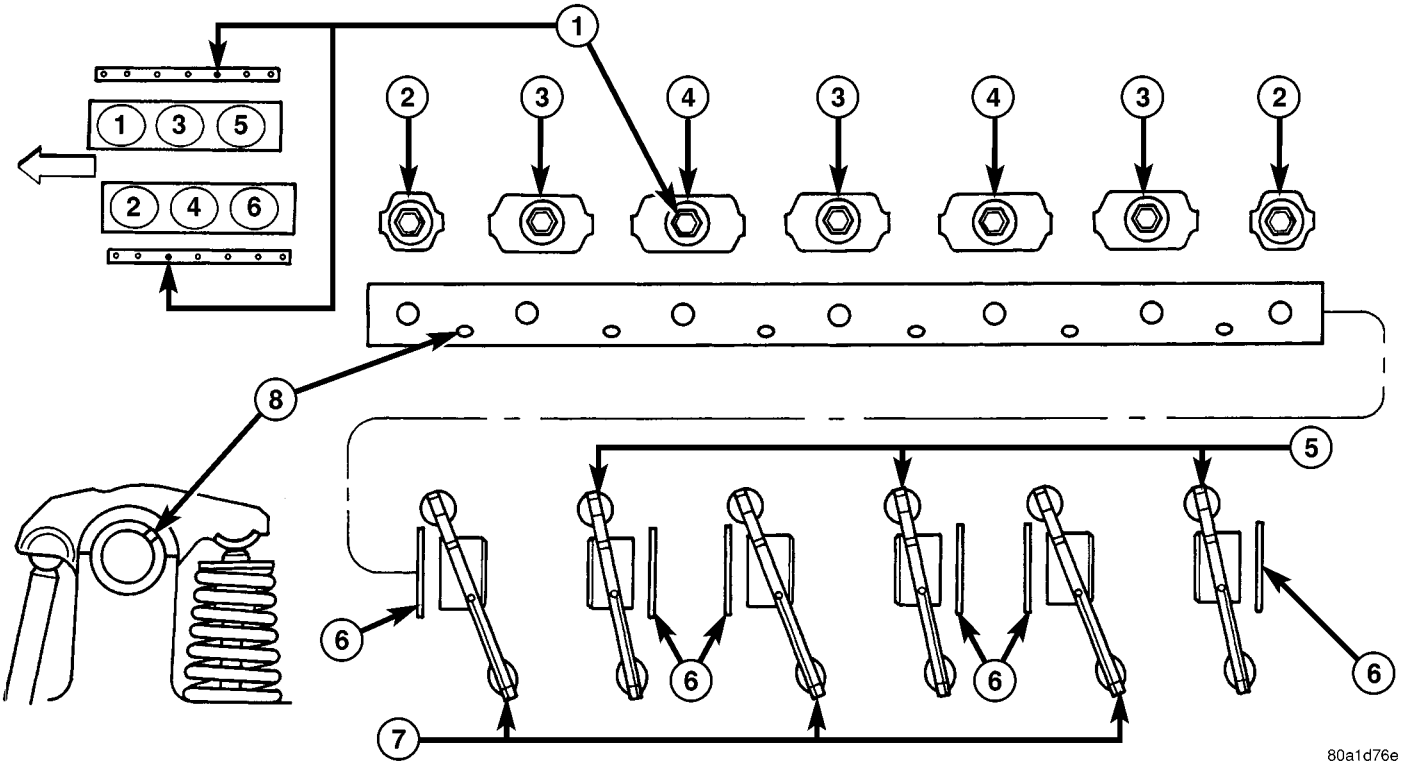

Fig. 42 ROCKER ARMS AND SHAFT

1 - BOLT (ROCKER SHAFT OIL FEED - LONGER LENGTH)
2 - SHAFT RETAINER/SPACER - 21.5 mm (0.84 in.)
3 -SHAFT RETAINER/SPACER - 37.5 mm (1.47 in.)
4 - SHAFT RETAINER/SPACER - 40.9 mm (1.61 in.)
5 - ROCKER ARM - EXHAUST
6 - WASHER
7 - ROCKER ARM - INTAKE (LARGER OFFSET)
8 - ROCKER ARMS LUBRICATION FEED HOLE (POSITION UPWARD & TOWARD VALVE SPRING)

(3) Slowly tighten rocker shaft bolts evenly until shaft is seated. Tighten bolts to 23 N·m (200 in. lbs.) (Fig. 43).

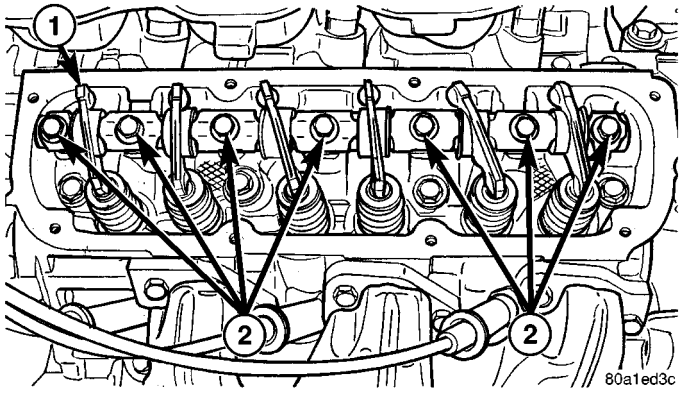

Fig. 43 ROCKER ARMS AND SHAFT

1 - ROCKER ARMS AND SHAFT ASSEMBLY
2 - ROCKER SHAFT BOLTS

(4) Install the cylinder head cover(s). (Refer to 9 - ENGINE/CYLINDER HEAD/CYLINDER HEAD COVER(S) - INSTALLATION)

VALVE STEM SEALS

DESCRIPTION

The valve stem seals are made of Viton rubber. The seals are positioned over the valve stem and seated on the valve guide (Fig. 44).

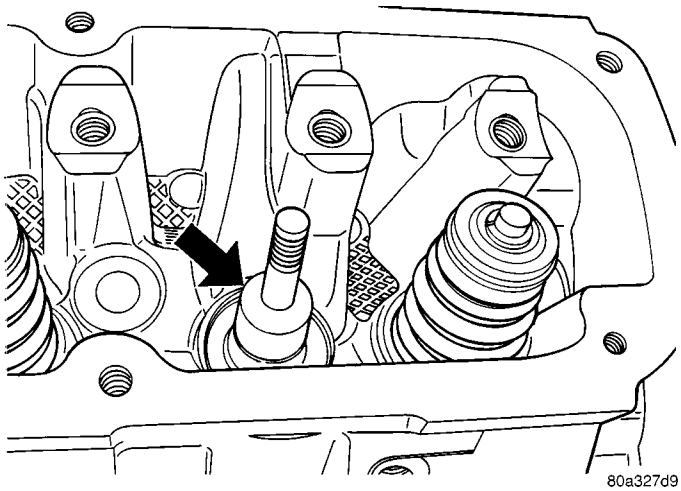

Fig. 44 Valve Stem Seal

VALVE STEM SEALS (Continued)

REMOVAL

(1) Remove the valve springs. (Refer to 9 - ENGINE/CYLINDER HEAD/VALVE SPRINGS - REMOVAL)

(2) Remove the valve stem seal (Fig. 44).

INSTALLATION

(1) Install the valve stem seal squarely over the valve guide, using the valve stem as a guide (Fig. 44). Do not force the seal against top of the valve guide.

(2) Install the valve spring. (Refer to 9 - ENGINE/CYLINDER HEAD/VALVE SPRINGS - INSTALLATION)

ENGINE BLOCK

DESCRIPTION

The cylinder block is made of cast iron and is a deep skirt design.

STANDARD PROCEDURE - CYLINDER BORE HONING

(1) Used carefully, the cylinder bore resizing hone, recommended tool C-823 or equivalent, equipped with 220 grit stones, is the best tool for this honing procedure. In addition to deglazing, it will reduce taper and out-of-round as well as removing light scuffing, scoring or scratches. Usually a few strokes will clean up a bore and maintain the required limits.

(2) Deglazing of the cylinder walls may be done using a cylinder surfacing hone, recommended tool C-3501 or equivalent, equipped with 280 grit stones, if the cylinder bore is straight and round. 20–60 strokes depending on the bore condition, will be sufficient to provide a satisfactory surface. Use a light honing oil. **Do not use engine or transmission oil, mineral spirits or kerosene.** Inspect cylinder walls after each 20 strokes.

(3) Honing should be done by moving the hone up and down fast enough to get a cross-hatch pattern. When hone marks **intersect** at 40-60 degrees, the cross hatch angle is most satisfactory for proper seating of rings (Fig. 45).

(4) A controlled hone motor speed between 200–300 RPM is necessary to obtain the proper cross-hatch angle. The number of up and down strokes per minute can be regulated to get the desired 40–60 degree angle. Faster up and down strokes increase the cross-hatch angle.

(5) After honing, it is necessary that the block be cleaned again to remove all traces of abrasive.

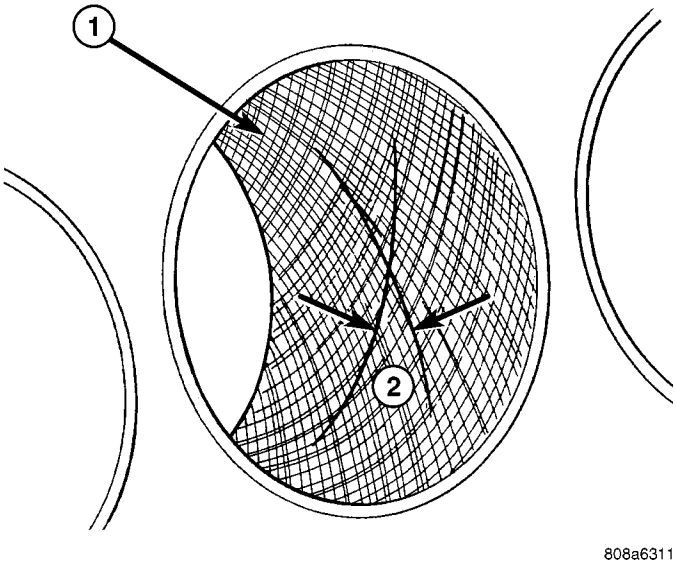

Fig. 45 Cylinder Bore Cross-Hatch Pattern

1 - CROSS-HATCH PATTERN
2 - 40°–60°

CAUTION: Ensure all abrasives are removed from engine parts after honing. It is recommended that a solution of soap and hot water be used with a brush and the parts then thoroughly dried. The bore can be considered clean when it can be wiped clean with a white cloth and cloth remains clean. Oil the bores after cleaning to prevent rusting.

CLEANING

Clean cylinder block thoroughly using a suitable cleaning solvent.

INSPECTION

ENGINE BLOCK

(1) Clean cylinder block thoroughly and check all core hole plugs for evidence of leaking.

(2) If new core plugs are to be installed, (Refer to 9 - ENGINE - STANDARD PROCEDURE - ENGINE CORE AND OIL GALLERY PLUGS).

(3) Examine block and cylinder bores for cracks or fractures.

(4) Check block deck surfaces for flatness. Deck surface must be within service limit of 0.1 mm (0.004 in.).

CYLINDER BORE

NOTE: The cylinder bores should be measured at normal room temperature, 21°C (70°F).

The cylinder walls should be checked for out-of-round and taper with Tool C119 or equivalent (Fig.

ENGINE BLOCK (Continued)

46) (Refer to 9 - ENGINE - SPECIFICATIONS). If the cylinder walls are badly scuffed or scored, the cylinder block should be replaced, and new pistons and rings fitted.

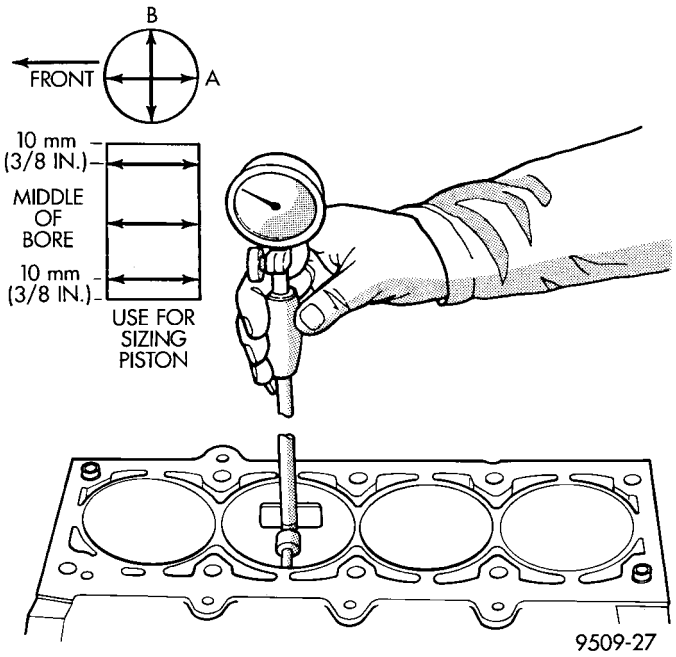

Fig. 46 Checking Cylinder Bore Size

Measure the cylinder bore at three levels in directions A and B (Fig. 46). Top measurement should be 10 mm (3/8 in.) down and bottom measurement should be 10 mm (3/8 in.) up from bottom of bore. (Refer to 9 - ENGINE - SPECIFICATIONS).

HYDRAULIC LIFTERS (CAM IN BLOCK)

DESCRIPTION

The hydraulic lifters are a roller type design and are positioned in the cylinder block. The lifters are aligned and retained by a yoke and a retainer (Fig. 48).

Lifter alignment is maintained by machined flats on lifter body. Lifters are fitted in pairs into six aligning yokes. The aligning yokes are secured by a yoke retainer (Fig. 48).

DIAGNOSIS AND TESTING - HYDRAULIC LIFTERS

HYDRAULIC LIFTERS DIAGNOSIS - PRELIMINARY STEP

Before disassembling any part of the engine to correct lifter noise, check the engine oil pressure. (Refer to 9 - ENGINE/LUBRICATION - DIAGNOSIS AND TESTING)

Check engine oil level. The oil level in the pan should never be above the MAX mark on dipstick, or below the MIN mark. Either of these two conditions could cause noisy lifters.

OIL LEVEL TOO HIGH

If oil level is above the MAX mark on dipstick, it is possible for the connecting rods to dip into the oil while engine is running and create foaming. Foam in oil pan would be fed to the hydraulic lifters by the oil pump causing them to become soft and allow valves to seat noisily.

OIL LEVEL TOO LOW

Low oil level may allow pump to take in air which when fed to the lifters it causes them to become soft and allows valves to seat noisily. Any leaks on intake side of pump, through which air can be drawn, will create the same lifter noise. Check the lubrication system from the intake strainer to the oil pump cover, including the relief valve retainer cap. When lifter noise is due to aeration, it may be intermittent or constant, and usually more than one lifter will be noisy. When oil level and leaks have been corrected, the engine should be operated at fast idle to allow all of the air inside of the lifters to be bled out.

VALVE TRAIN NOISE

To determine source of valve train noise, operate engine at idle with cylinder head covers removed and listen for source of the noise.

NOTE: Worn valve guides or cocked springs are sometimes mistaken for noisy lifters. If such is the case, noise may be dampened by applying side thrust on the valve spring. If noise is not appreciably reduced, it can be assumed the noise is in the tappet. Inspect the rocker arm push rod sockets and push rod ends for wear.

Valve lifter noise ranges from light noise to a heavy click. A light noise is usually caused by excessive leak-down around the unit plunger which will necessitate replacing the lifter, or by the plunger partially sticking in the lifter body cylinder. A heavy click is caused either by a lifter check valve not seating, or by foreign particles becoming wedged between the plunger and the lifter body causing the plunger to stick in the down position. This heavy click will be accompanied by excessive clearance between the valve stem and rocker arm as valve closes. In either case, lifter assembly should be removed for inspection.

HYDRAULIC LIFTERS (CAM IN BLOCK) (Continued)

REMOVAL

(1) Remove the cylinder head(s). (Refer to 9 - ENGINE/CYLINDER HEAD - REMOVAL)

(2) Remove the yoke retainer and aligning yokes (Fig. 48).

(3) Remove the hydraulic lifters. If necessary use Special Tool C-4129, or equivalent to remove lifters from bores. If lifters are to be reused, identify each lifter to ensure installation in original location.

INSTALLATION

(1) Lubricate the lifters with engine oil.

NOTE: Position the lifter in bore with the lubrication hole facing upward (Fig. 47).

(2) Install the hydraulic lifters with the lubrication hole facing upward towards middle of block (Fig. 47). Install lifters in original positions, if reused.

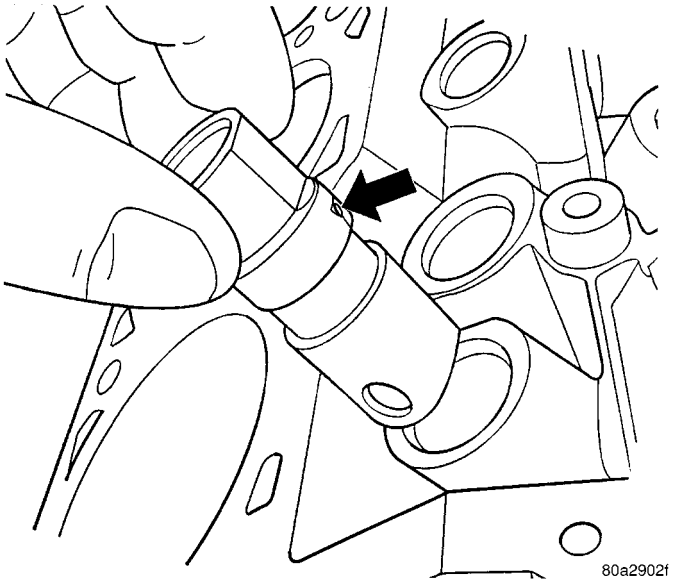

Fig. 47 LIFTER LUBRICATION HOLE

(3) Install lifter aligning yokes (Fig. 48).

(4) Install yoke retainer and torque screws to 12 N·m (105 in. lbs.) (Fig. 48).

(5) Install the cylinder heads. (Refer to 9 - ENGINE/CYLINDER HEAD - INSTALLATION)

(6) Start and operate engine. Warm up to normal operating temperature.

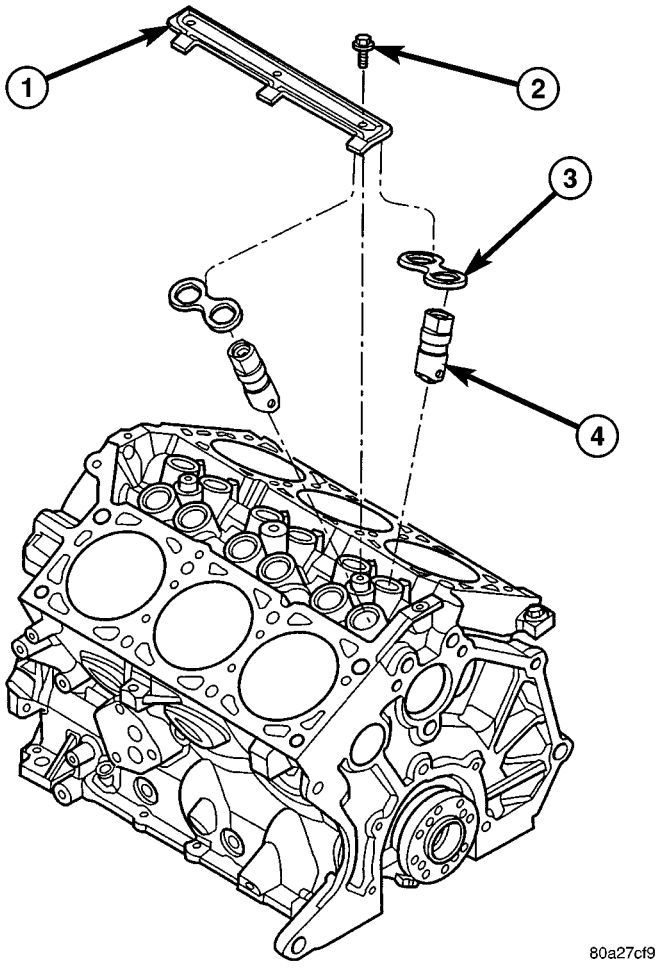

Fig. 48 Lifter Aligning Yoke and Retainer

1 - YOKE RETAINER
2 - BOLT - YOKE RETAINER
3 - ALIGNING YOKE
4 - HYDRAULIC LIFTER

CAUTION: To prevent damage to valve mechanism, engine must not be run above fast idle until all hydraulic lifters have filled with oil and have become quiet.

CAMSHAFT & BEARINGS (IN BLOCK)

DESCRIPTION

The nodular iron camshaft is mounted in the engine block and supported with four steel backed aluminum bearings (Fig. 49). A thrust plate, located in front of the first bearing, is bolted to the block and controls the camshaft end play (Fig. 49). To distinguish camshafts between the 3.3L and 3.8L engines, a cast-in ring is located between the rear bearing journal and rear lobe (Fig. 50). The 3.3L engine application is as-cast only. The 3.8L engine application the cast ring is machined off.

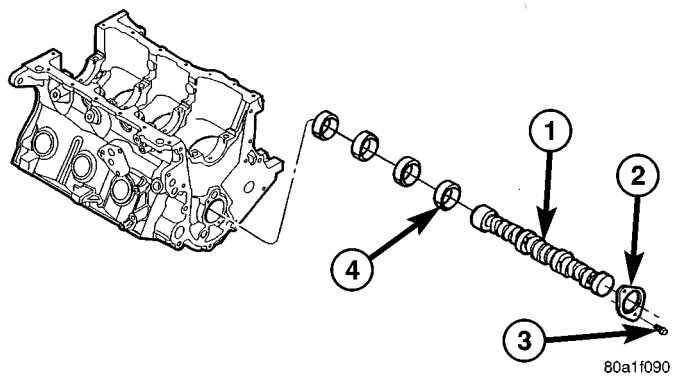

Fig. 49 CAMSHAFT AND BEARINGS

1 - CAMSHAFT
2 - THRUST PLATE
3 - BOLT
4 - CAMSHAFT BEARINGS (SERVICED WITH BLOCK)

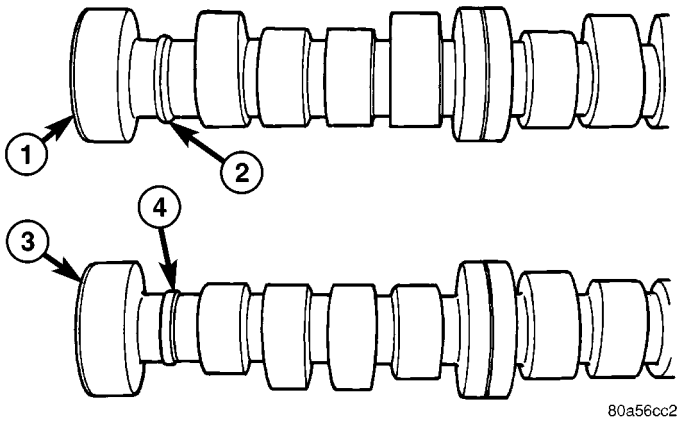

Fig. 50 CAMSHAFT IDENTIFICATION

1 - CAMSHAFT - 3.3L ENGINE
2 - CAST-IN RING
3 - CAMSHAFT - 3.8L ENGINE
4 - MACHINED CAST-IN RING

OPERATION

The camshaft is driven by the crankshaft through a timing chain and sprockets. The camshaft has precisely machined (egg-shaped) lobes to provide accurate valve timing and duration.

REMOVAL

(1) Remove the engine assembly from vehicle (Refer to 9 - ENGINE - REMOVAL).

(2) Remove the cylinder heads (Refer to 9 - ENGINE/CYLINDER HEAD - REMOVAL).

(3) Remove the timing chain and camshaft sprocket (Refer to 9 - ENGINE/VALVE TIMING/TIMING BELT/CHAIN AND SPROCKETS - REMOVAL).

(4) Remove the hydraulic lifters (Refer to 9 - ENGINE/ENGINE BLOCK/HYDRAULIC LIFTERS (CAM IN BLOCK) - REMOVAL). Identify each tappet for reinstallation in original location.

(5) Remove camshaft thrust plate (Fig. 49).

(6) Install a long bolt into front of camshaft to facilitate removal of the camshaft.

(7) Remove the camshaft (Fig. 49), being careful not to damage cam bearings with the cam lobes.

NOTE: The camshaft bearings are serviced with the engine block.

INSPECTION

(1) Check the cam lobes and bearing surfaces for abnormal wear and damage (Fig. 51). Replace camshaft as required.

NOTE: If camshaft is replaced due to lobe wear or damage, always replace the lifters.

(2) Measure the lobe actual wear (unworn area - wear zone = actual wear) (Fig. 51) and replace camshaft if out of limit. Standard value is 0.0254 mm (0.001 in.), wear **limit** is 0.254 mm (0.010 in.).

INSTALLATION

(1) Lubricate camshaft lobes and camshaft bearing journals with engine oil.

(2) Install a long bolt into the camshaft to assist in the installation of the camshaft.

(3) Carefully install the camshaft in engine block.

(4) Install camshaft thrust plate and bolts (Fig. 49). Tighten to 12 N·m (105 in. lbs.) torque.

(5) Measure camshaft end play. (Refer to 9 - ENGINE - SPECIFICATIONS) If not within specifications, replace thrust plate.

(6) Install the timing chain and sprockets. (Refer to 9 - ENGINE/VALVE TIMING/TIMING BELT/CHAIN AND SPROCKETS - INSTALLATION)

CAMSHAFT & BEARINGS (IN BLOCK) (Continued)

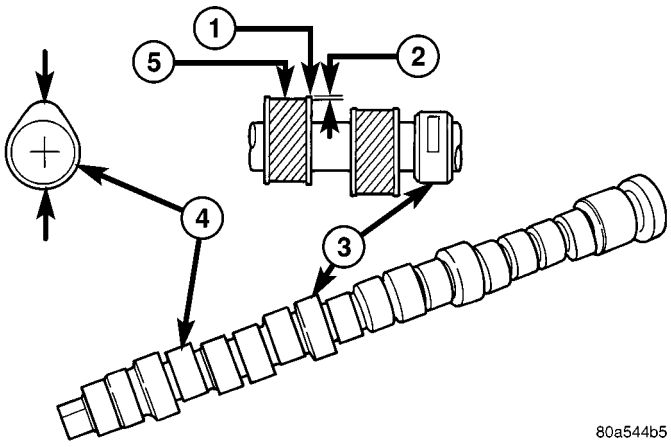

Fig. 51 Checking Camshaft for Wear (Typical)

1 - UNWORN AREA
2 - ACTUAL WEAR
3 - BEARING JOURNAL
4 - LOBE
5 - WEAR ZONE

NOTE: When camshaft is replaced, all of the hydraulic lifters must be replaced also.

(7) Install the hydraulic lifters (Refer to 9 - ENGINE/ENGINE BLOCK/HYDRAULIC LIFTERS (CAM IN BLOCK) - INSTALLATION). Each lifter reused must be installed in the same position from which it was removed.

(8) Install the timing chain cover. (Refer to 9 - ENGINE/VALVE TIMING/TIMING BELT / CHAIN COVER(S) - INSTALLATION)

(9) Install the cylinder heads. (Refer to 9 - ENGINE/CYLINDER HEAD - INSTALLATION)

(10) Install the cylinder head covers. (Refer to 9 - ENGINE/CYLINDER HEAD/CYLINDER HEAD COVER(S) - INSTALLATION)

(11) Install the lower and upper intake manifolds. (Refer to 9 - ENGINE/MANIFOLDS/INTAKE MANIFOLD - INSTALLATION)

(12) Install the engine assembly. (Refer to 9 - ENGINE - INSTALLATION)

PISTON & CONNECTING ROD

DESCRIPTION

The pistons are made of cast aluminum alloy and are a strutless, short skirt design. The piston rings consist of two compression rings and a three piece oil ring. Piston pins connect the piston to the forged steel connecting rods. The piston pins are a press fit into the connecting rod.

STANDARD PROCEDURE

STANDARD PROCEDURE - FITTING CONNECTING RODS

The bearing caps are not interchangeable or reversible, and should be marked at removal to ensure correct reassembly. The bearing shells must be installed with the tangs inserted into the machined grooves in the rods and caps. Install cap with the tangs on the same side as the rod. For connecting rod bearing fitting (Refer to 9 - ENGINE/ENGINE BLOCK/CONNECTING ROD BEARINGS - STANDARD PROCEDURE). Fit all connecting rods on one bank until complete.

NOTE: The connecting rod cap bolts should be examined before reuse. Bolt stretch can be checked by holding a scale or straight edge against the threads. If all the threads do not contact the scale the bolt must be replaced (Fig. 52).

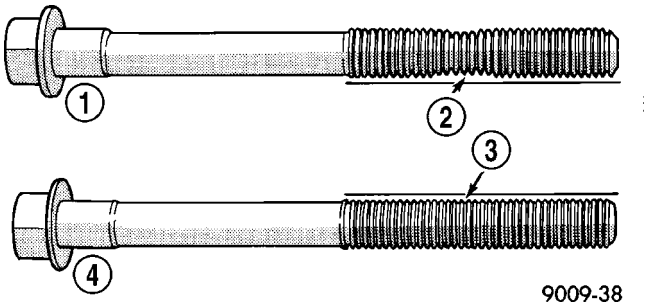

Fig. 52 Check for Stretched (Necked) Bolts

1 - STRETCHED BOLT
2 - THREADS ARE NOT STRAIGHT ON LINE
3 - THREADS ARE STRAIGHT ON LINE
4 - UNSTRETCHED BOLT

PISTON & CONNECTING ROD (Continued)

(1) Before installing the nuts the threads should be oiled with engine oil.

(2) Install nuts finger tight on each bolt then alternately torque each nut to assemble the cap properly.

(3) Tighten the nuts to 54 N·m PLUS 1/4 turn (40 ft. lbs. PLUS 1/4 turn).

(4) Using a feeler gauge, check connecting rod side clearance (Fig. 53). Refer to Engine Specifications (Refer to 9 - ENGINE - SPECIFICATIONS).

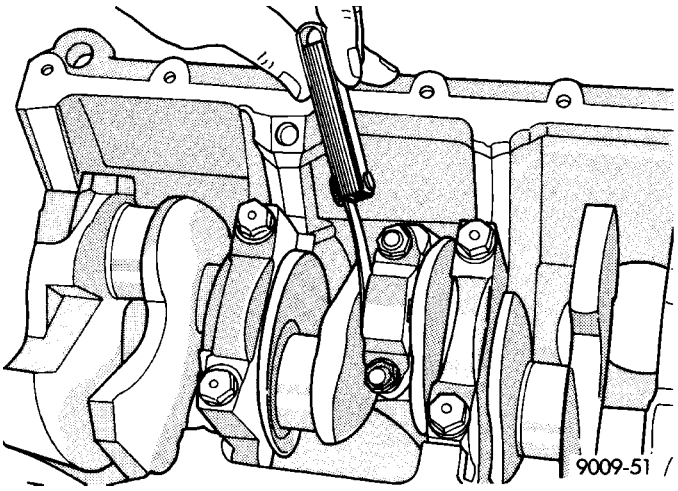

Fig. 53 Checking Connecting Rod Side Clearance

STANDARD PROCEDURE - FITTING PISTONS

The piston and cylinder wall must be clean and dry. Piston diameter should be measured 90 degrees to piston pin at size location shown in (Fig. 54). Cylinder bores should be measured halfway down the cylinder bore and transverse to the engine crankshaft center line shown in (Fig. 55). Refer to Engine Specifications (Refer to 9 - ENGINE - SPECIFICATIONS). **Pistons and cylinder bores should be measured at normal room temperature, 21°C (70°F).**

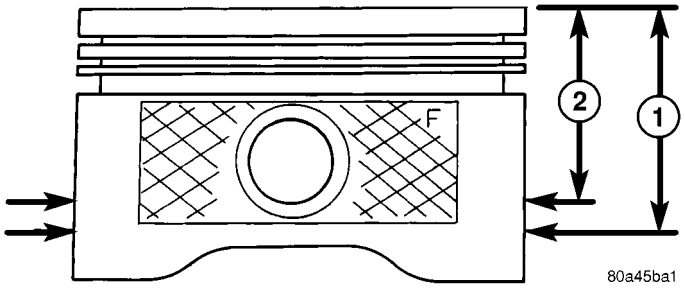

Fig. 54 Piston Measurement Locations - Typical

1 - 39.8 mm (1.56 in.) 3.3L ENGINE
2 - 33.0 mm (1.29 in.) 3.8L ENGINE

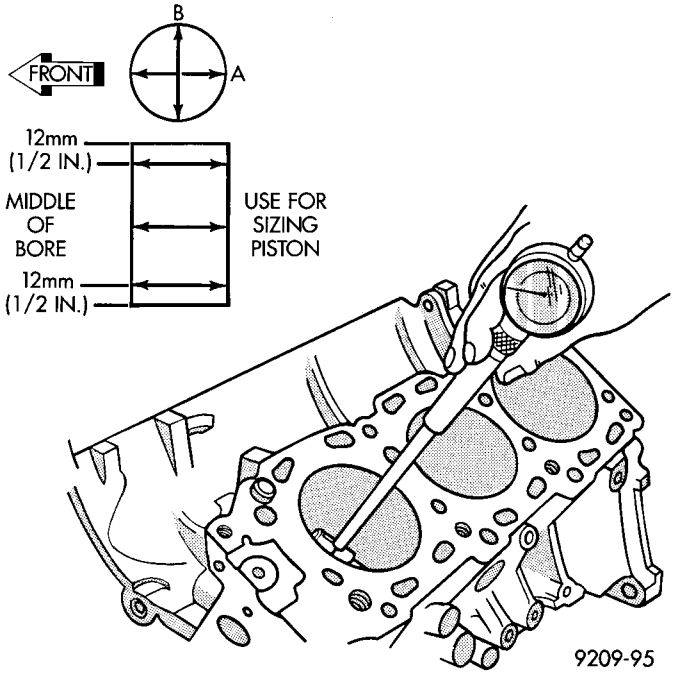

Fig. 55 Checking Cylinder Bore Size

REMOVAL

(1) Disconnect negative cable from battery.

(2) Remove the cylinder heads. (Refer to 9 - ENGINE/CYLINDER HEAD - REMOVAL)

(3) Remove the oil pan. (Refer to 9 - ENGINE/LUBRICATION/OIL PAN - REMOVAL)

(4) Remove the top ridge of cylinder bores with a reliable ridge reamer, if necessary, before removing pistons from cylinder block. **Be sure to keep tops of pistons covered during this operation. Pistons and connecting rods must be removed from top of cylinder block. When removing piston and connecting rod assemblies from the engine, rotate crankshaft so that each connecting rod is centered in cylinder bore.**

(5) Inspect connecting rods and connecting rod caps for cylinder identification. Identify them, if necessary (Fig. 56).

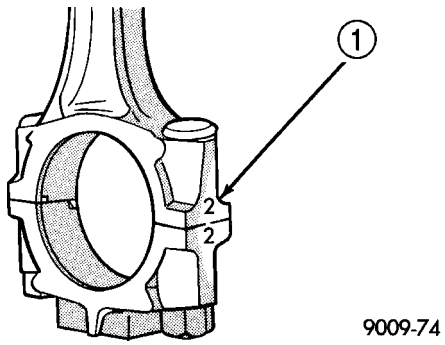

Fig. 56 Identify Connecting Rod to Cylinder

1 - CYLINDER NUMBER

PISTON & CONNECTING ROD (Continued)

(6) Remove connecting rod cap. Install connecting rod bolt protectors on connecting rod bolts (Fig. 57).

(7) Remove each piston and connecting rod assembly out of the cylinder bore.

NOTE: Be careful not to nick crankshaft journals.

(8) After removal, install bearing cap on the mating rod.

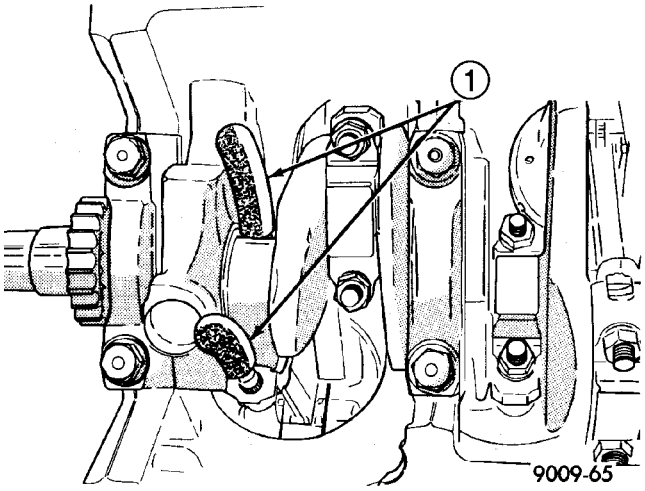

Fig. 57 Connecting Rod Protectors

1 - COVER ROD BOLTS WITH A SUITABLE COVERING WHEN REMOVING OR INSTALLING PISTON ASSEMBLY

INSTALLATION

(1) Before installing pistons and connecting rod assemblies into the bore, ensure that compression ring gaps are staggered so that neither is in line with oil ring rail gap (Fig. 58).

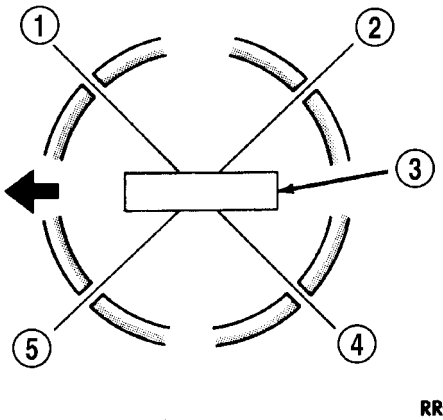

Fig. 58 Piston Ring End Gap Position

1 - SIDE RAIL UPPER
2 - NO. 1 RING GAP
3 - PISTON PIN
4 - SIDE RAIL LOWER
5 - NO. 2 RING GAP AND SPACER EXPANDER GAP

(2) Before installing the ring compressor, ensure the oil ring expander ends are butted and the rail gaps located as shown in (Fig. 58).

(3) Lubricate the piston and rings with clean engine oil. Position a ring compressor over the piston and rings, and tighten the compressor (Fig. 59). **Be sure position of rings does not change during this operation.**

(4) Position upper bearing onto connecting rod. Lubricate bearing with oil.

(5) Install connecting rod bolt protectors (rubber hose or equivalent) on the connecting rod bolts (Fig. 59).

(6) The pistons are marked with a “F” located near the piston pin. Install piston with this mark positioned to front of engine on both cylinder banks. The connecting rod oil squirt hole faces the major thrust (right) side of the engine block (Fig. 60).

(7) Rotate crankshaft until the connecting rod journal is located in the center of the cylinder bore. Insert connecting rod and piston into cylinder bore. Carefully guide connecting rod over the crankshaft journal (Fig. 59).

(8) Tap the piston down in cylinder bore, using a hammer handle. At the same time, guide connecting rod into position on connecting rod journal.

(9) Install lower bearing shell and connecting rod cap (Fig. 59). Install nuts on cleaned and oiled rod bolts and tighten to 54 N·m (40 ft. lbs.) PLUS ¼ turn.

(10) Repeat procedure for each piston and connecting rod installation.

(11) Install the cylinder heads. (Refer to 9 - ENGINE/CYLINDER HEAD - INSTALLATION)

(12) Install the oil pan. (Refer to 9 - ENGINE/LUBRICATION/OIL PAN - INSTALLATION)

(13) Fill engine crankcase with proper oil to correct level.

(14) Connect negative cable to battery.

PISTON & CONNECTING ROD (Continued)

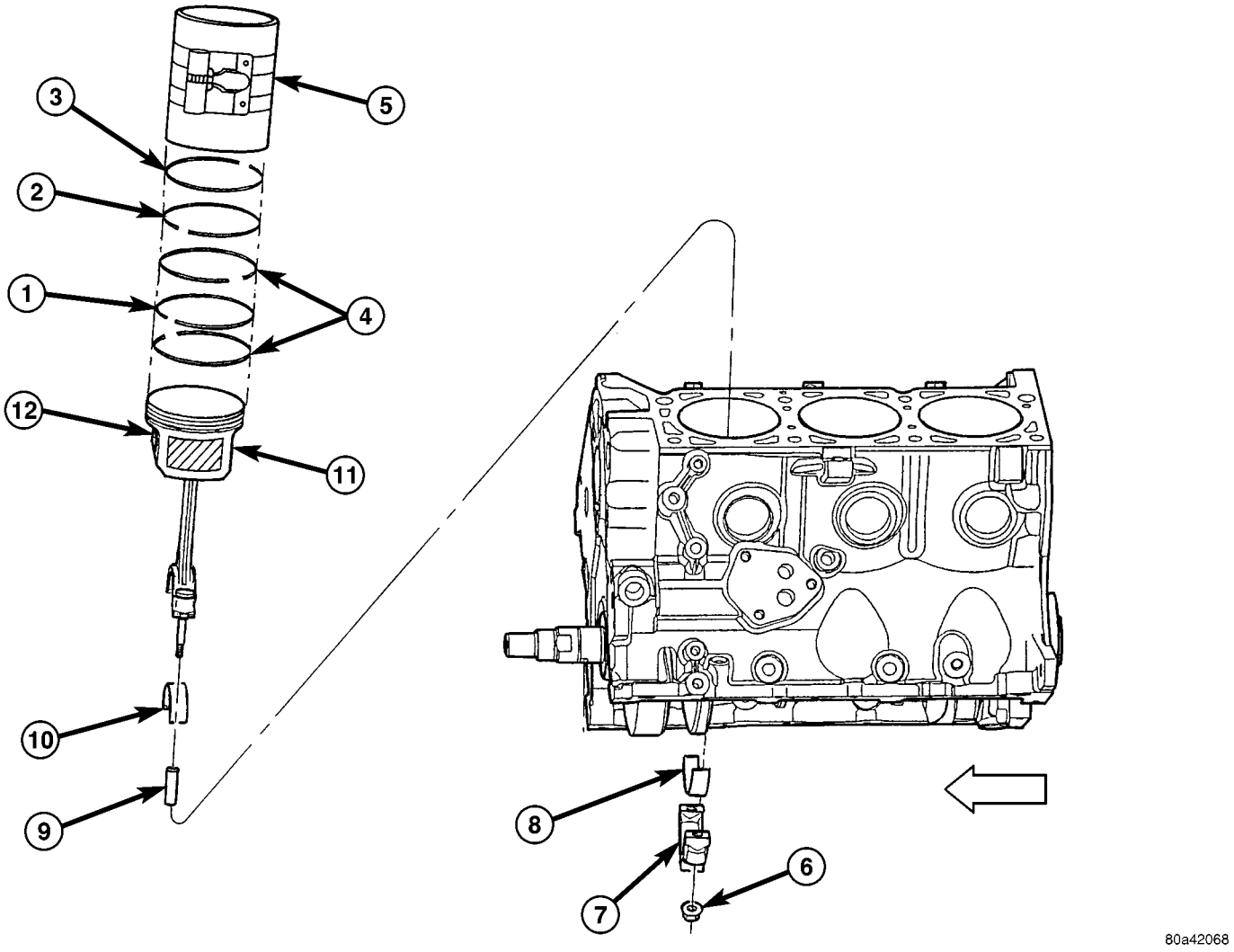

Fig. 59 PISTON AND CONNECTING ROD INSTALLATION

1 - RING - OIL CONTROL
2 - RING - NO. 2 COMPRESSION
3 - RING - NO. 1 COMPRESSION
4 - RING - SIDE RAIL UPPER & LOWER
5 - PISTON RING COMPRESSOR
6 - NUT - CONNECTING ROD
7 - CAP - CONNECTING ROD
8 - BEARING - CONNECTING ROD LOWER
9 - CRANKSHAFT JOURNAL PROTECTOR (RUBBER HOSE)
10 - BEARING - CONNECTING ROD UPPER
11 - PISTON AND CONNECTING ROD ASSEMBLY
12 - PISTON LOCATION MARK (F = FRONT)

PISTON & CONNECTING ROD (Continued)

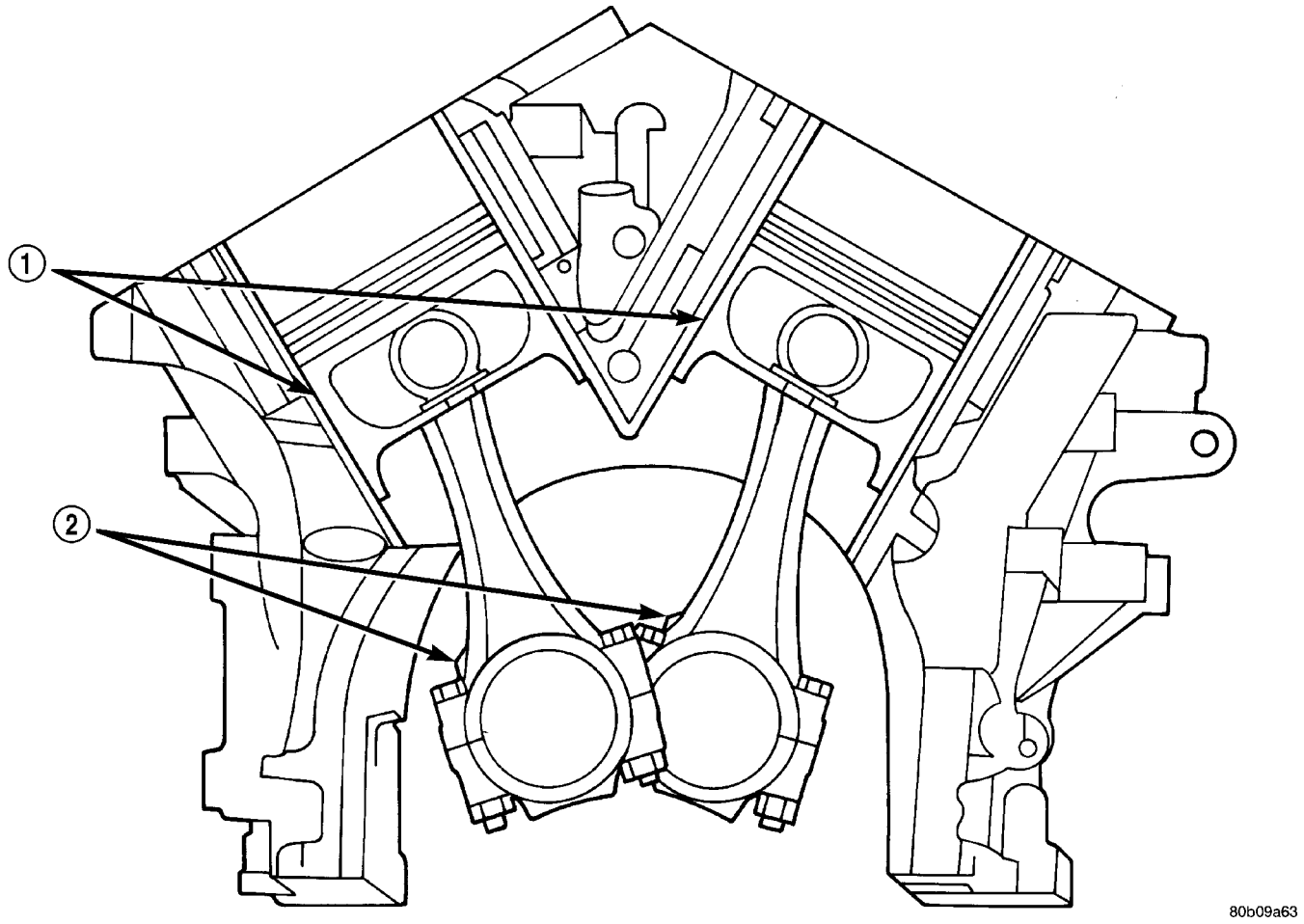

Fig. 60 Piston and Connecting Rod Positioning (Front View of Engine)

1 - MAJOR THRUST SIDE OF PISTON
2 - OIL SQUIRT HOLE

CONNECTING ROD BEARINGS

STANDARD PROCEDURE - MEASURING CONNECTING ROD BEARING CLEARANCE

The bearing caps are not interchangeable and should be marked at removal to ensure correct assembly. The bearing shells must be installed with the tangs inserted into the machined grooves in the rods and caps. Install cap with the tangs on the same side as the rod. Fit all rods on one bank until complete. Connecting rod bearings are available in the standard size and the following undersizes: 0.025 mm (0.001 in.) and 0.250 mm (0.010 in.).

CAUTION: Install the bearings in pairs. Do not use a new bearing half with an old bearing half. Do not file the rods or bearing caps.

Measure connecting rod journal for taper and out-of-round. (Refer to 9 - ENGINE/ENGINE BLOCK/ CRANKSHAFT - INSPECTION)

The connecting rod bearing clearances can be determined by use of Plastigage or the equivalent. The following is the recommended procedure for the use of Plastigage:

(1) Rotate the crankshaft until the connecting rod to be checked is at the bottom of its stroke.

(2) Remove oil film from surface to be checked. Plastigage is soluble in oil.

(3) Place a piece of Plastigage across the entire width of the bearing shell in the bearing cap approximately 6.35 mm (1/4 in.) off center and away from the oil hole. In addition, suspect areas can be checked by placing Plastigage in that area.

(4) Assemble the rod cap with Plastigage in place. Tighten the rod cap to the specified torque. **Do not rotate the crankshaft while assembling the cap or the Plastigage may be smeared, giving inaccurate results.**

(5) Remove the bearing cap and compare the width of the flattened Plastigage with the scale provided on the package (Fig. 61). Locate the band closest to the same width. This band indicates the

CONNECTING ROD BEARINGS (Continued)

amount of oil clearance. Differences in readings between the ends indicate the amount of taper present. Record all readings taken. Refer to Engine Specifications (Refer to 9 - ENGINE - SPECIFICATIONS). **Plastigage generally is accompanied by two scales. One scale is in inches, the other is a metric scale. If the bearing clearance exceeds wear limit specification, replace the bearing.**

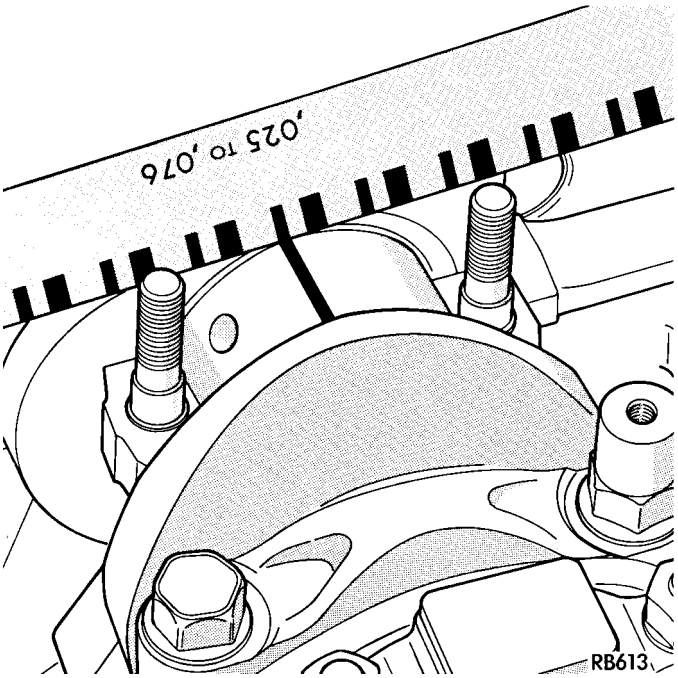

Fig. 61 Measuring Connecting Rod Bearing Clearance

PISTON RINGS

STANDARD PROCEDURE - PISTON RING FITTING

(1) Wipe cylinder bore clean. Insert the ring and push down with piston to ensure squareness in bore to approximately 12 mm (0.50 in.) from top of cylinder bore. Check ring gap with a feeler gauge (Fig. 62). For clearance specification (Refer to 9 - ENGINE - SPECIFICATIONS).

(2) Check piston ring to groove side clearance (Fig. 63). For clearance specification (Refer to 9 - ENGINE - SPECIFICATIONS)

REMOVAL

(1) Remove piston and connecting rod. (Refer to 9 - ENGINE/ENGINE BLOCK/PISTON & CONNECTING ROD - REMOVAL)

(2) Remove No. 1 and No.2 piston rings from piston using a ring expander tool (Fig. 66).

(3) Remove upper oil ring side rail (Fig. 65).

(4) Remove lower oil ring side rail (Fig. 65).

(5) Remove oil ring expander (Fig. 65).

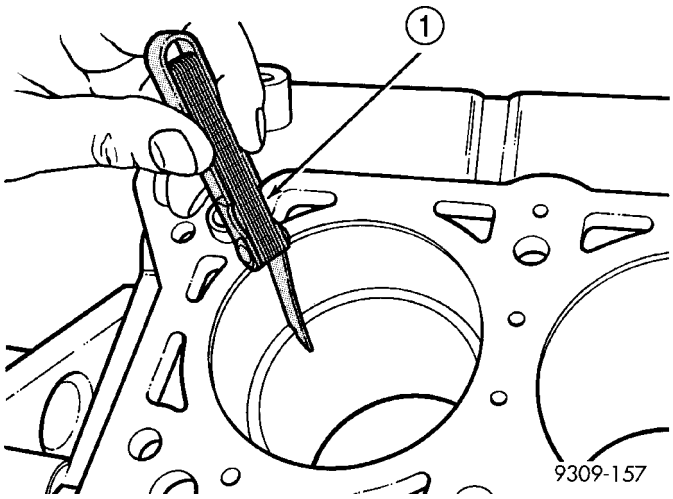

Fig. 62 Piston Ring Gap

1 - FEELER GAUGE

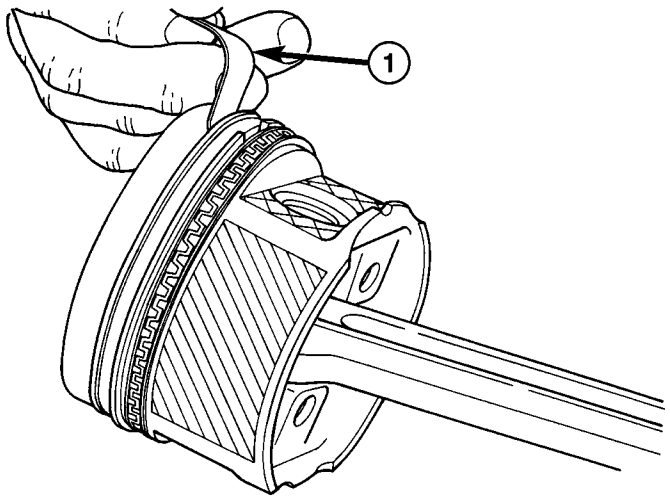

Fig. 63 Piston Ring Side Clearance

1 - FEELER GAUGE

INSTALLATION

(1) Install rings with manufacturers I.D. mark (if present) facing up, to the top of the piston (Fig. 64).

CAUTION: Install piston rings in the following order:

1. Oil ring expander.
2. Upper oil ring side rail.
3. Lower oil ring side rail.
4. No. 2 Intermediate piston ring.
5. No. 1 Upper piston ring.

(2) Install the side rail by placing one end between the piston ring groove and the expander. Hold end firmly and press down the portion to be installed until side rail is in position. **Do not use a piston ring expander** (Fig. 65).

PISTON RINGS (Continued)

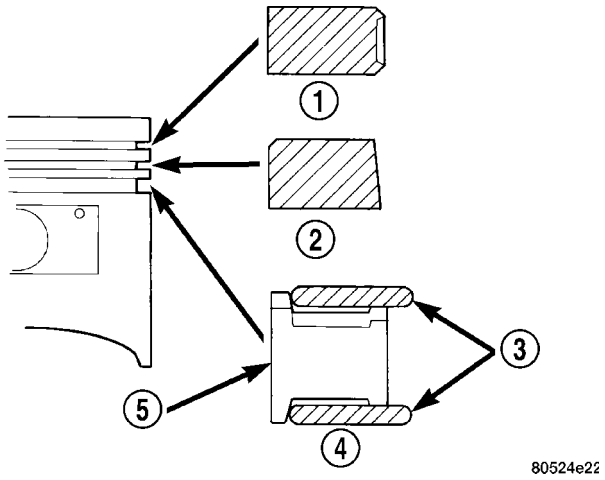

Fig. 64 Piston Ring Installation

1 - NO. 1 PISTON RING
2 - NO. 2 PISTON RING
3 - SIDE RAIL
4 - OIL RING
5 - SPACER EXPANDER

(3) Install upper side rail first and then the lower side rail.

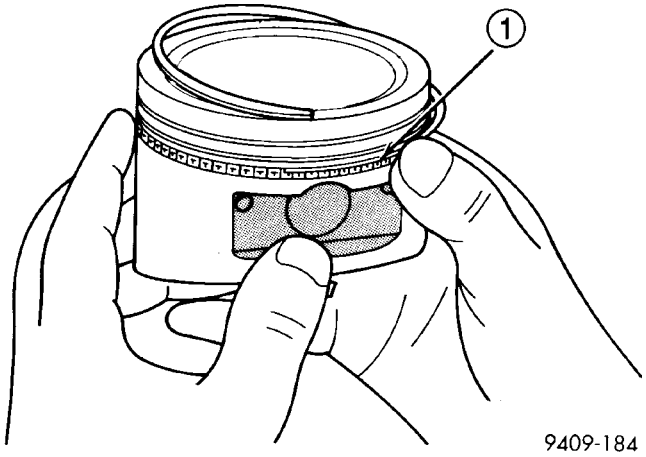

Fig. 65 Oil Ring Side Rail - Typical

1 - SIDE RAIL END

(4) Install No. 2 piston ring and then No. 1 piston ring (Fig. 66).

(5) Position piston ring end gaps as shown in (Fig. 67).

(6) Position oil ring expander gap at least 45° from the side rail gaps but **not** on the piston pin center or on the thrust direction. Staggering ring gap is important for oil control.

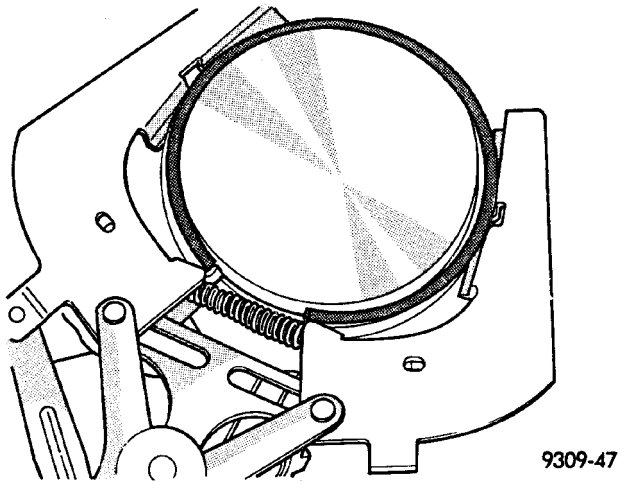

Fig. 66 Piston Ring Installation

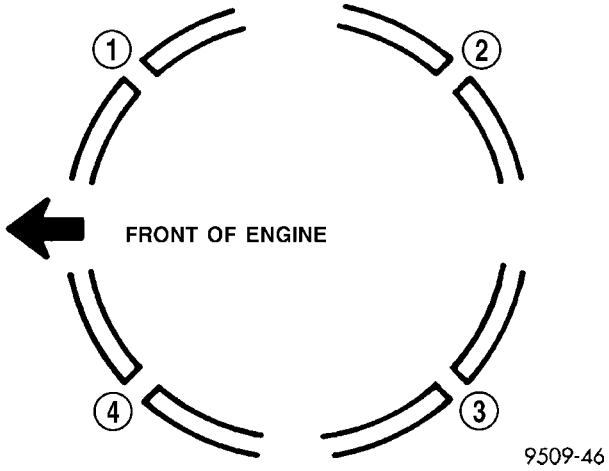

Fig. 67 Piston Ring End Gap Position

1 - GAP OF LOWER SIDE RAIL
2 - NO. 1 RING GAP
3 - GAP OF UPPER SIDE RAIL
4 - NO. 2 RING GAP AND SPACER EXPANDER GAP

CRANKSHAFT MAIN BEARINGS

STANDARD PROCEDURE - MAIN BEARING FITTING

Bearing caps are not interchangeable and should be marked at removal to insure correct assembly (Fig. 68). Upper and lower bearing halves are NOT interchangeable. Lower main bearing halves of 1, 3 and 4 are interchangeable. Upper main bearing halves of 1, 3 and 4 are interchangeable.

CRANKSHAFT MAIN BEARINGS (Continued)

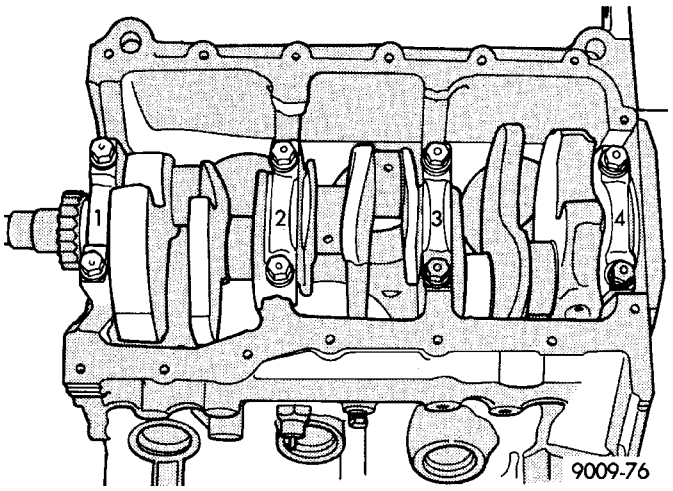

Fig. 68 Main Bearing Cap Identification

Upper and lower number 2 bearing halves are flanged to carry the crankshaft thrust loads and are NOT interchangeable with any other bearing halves in the engine (Fig. 69). All bearing cap bolts removed during service procedures are to be cleaned and lubricated with engine oil before installation. Bearing shells are available in standard and the following undersizes: 0.025 mm (0.001 in.) and 0.254 mm (0.010 in). Never install an undersize bearing that will reduce clearance below specifications.

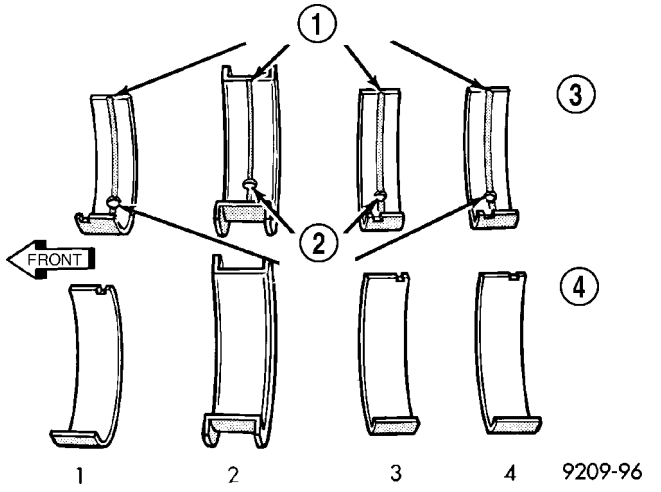

Fig. 69 Main Bearing Identification

1 - OIL GROOVES
2 - OIL HOLES
3 - UPPER BEARINGS
4 - LOWER BEARINGS

CRANKSHAFT BEARING OIL CLEARANCE

Inspect the crankshaft bearing journals. (Refer to 9 - ENGINE/ENGINE BLOCK/CRANKSHAFT - INSPECTION)

Engine crankshaft bearing clearances can be determined by use of Plastigage or the equivalent. The following is the recommended procedures for the use of Plastigage with the engine in the vehicle or engine on a repair stand.

PLASTIGAGE METHOD—ENGINE IN-VEHICLE

NOTE: The total clearance of the main bearings can only be determined with the engine in the vehicle by removing the weight of the crankshaft. This can be accomplished by either of two following methods:

(1) Preferred method:

a. Shim the bearings adjacent to the bearing to be checked in order to remove the clearance between upper bearing shell and the crankshaft. This can be accomplished by placing a minimum of 0.254 mm (0.010 in.) shim (e. g. cardboard, matchbook cover, etc.) between the bearing shell and the bearing cap on the adjacent bearings and tightening bolts to 14–20 N·m (10–15 ft. lbs.).

- When checking #1 main bearing shim #2 main bearing.
- When checking #2 main bearing shim #1 & #3 main bearing.
- When checking #3 main bearing shim #2 & #4 main bearing.
- When checking #4 main bearing shim #3 main bearing.

NOTE: Remove all shims before reassembling engine.

(2) Alternative Method:

a. Support the weight of the crankshaft with a jack under the counterweight adjacent to the bearing being checked.

(3) Remove oil film from surface to be checked. Plastigage is soluble in oil.

(4) Place a piece of Plastigage across the entire width of the bearing shell in the cap approximately 6.35 mm (1/4 in.) off center and away from the oil holes (Fig. 70). (In addition, suspected areas can be checked by placing the Plastigage in the suspected area). Torque the bearing cap bolts of the bearing being checked to the proper specifications.

(5) Remove the bearing cap and compare the width of the flattened Plastigage (Fig. 71) with the scale provided on the package. Locate the band closest to the same width. This band shows the amount of clearance in thousandths. Differences in readings between the ends indicate the amount of taper present. Record all readings taken. (Refer to 9 - ENGINE - SPECIFICATIONS) **Plastigage generally is accompanied by two scales. One scale is in inches, the other is a metric scale.**

CRANKSHAFT MAIN BEARINGS (Continued)

NOTE: Plastigage is available in a variety of clearance ranges. Use the most appropriate range for the specifications you are checking.

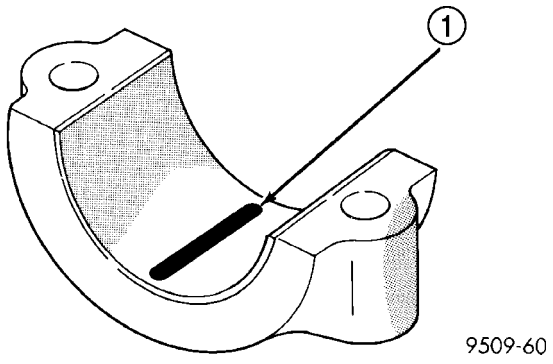

Fig. 70 Plastigage Placed in Lower

1 - PLASTIGAGE

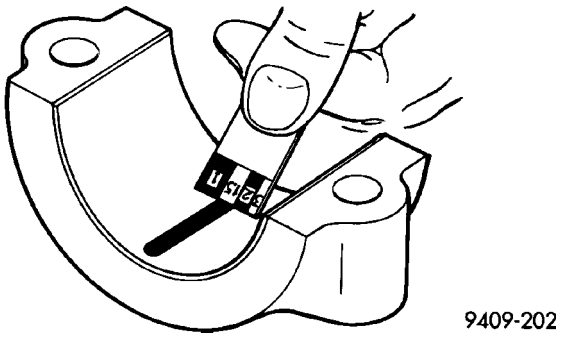

Fig. 71 Clearance Measurement

PLASTIGAGE METHOD—ENGINE OUT-OF-VEHICLE

(1) With engine in the inverted position (crankshaft up) and mounted on a repair stand, remove main journal cap.

(2) Remove oil from journal and bearing shell.

(3) Cut Plastigage to same length as width of the bearing and place it in parallel with the journal axis (Fig. 70).

(4) Carefully install the main bearing cap and tighten the bolts to specified torque.

CAUTION: Do not rotate crankshaft or the Plastigage will be smeared.

(5) Carefully remove the bearing cap and measure the width of the Plastigage at the widest part using the scale on the Plastigage package (Fig. 71). Refer to Engine Specifications for proper clearances (Refer to 9 - ENGINE - SPECIFICATIONS). If the clearance exceeds the specified limits, replace the main bearing(s) with the appropriate size, and if necessary, have the crankshaft machined to next undersize.

REMOVAL - CRANKSHAFT MAIN BEARINGS

(1) Remove the oil pan. (Refer to 9 - ENGINE/LUBRICATION/OIL PAN - REMOVAL)

(2) Identify main bearing caps before removal.

(3) Remove bearing caps one at a time. Remove upper half of bearing by inserting Special Main Bearing Tool C-3059 (Fig. 72) into the oil hole of crankshaft.

(4) Slowly rotate crankshaft clockwise, forcing out upper half of bearing shell.

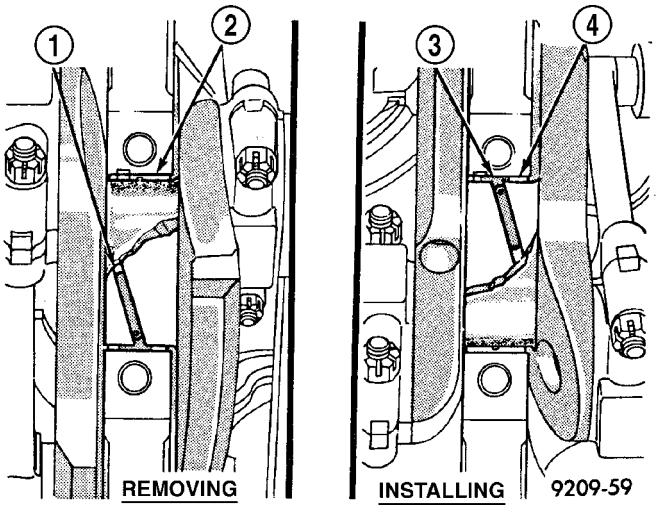

Fig. 72 Upper Main Bearing Removing/Installing With Special Tool C-3059

1 - SPECIAL TOOL C-3059
2 - BEARING
3 - SPECIAL TOOL C-3059
4 - BEARING

INSTALLATION - CRANKSHAFT MAIN BEARINGS

NOTE: One main bearing should be selectively fitted while all other main bearing caps are properly tightened.

(1) For main bearing fitting procedure, (Refer to 9 - ENGINE/ENGINE BLOCK/CRANKSHAFT MAIN BEARINGS - STANDARD PROCEDURE)

(2) Start bearing in place, and insert Main Bearing Tool C-3059 into oil hole of crankshaft (Fig. 72).

(3) Slowly rotate crankshaft counterclockwise sliding the bearing into position. Remove Special Main Bearing Tool C-3059.

(4) Inspect main cap bolts for stretching (Fig. 73). Replace bolts that are stretched.

NOTE: The main cap bolts should be examined before reuse. Bolt stretch can be checked by holding a scale or straight edge against the threads. If all the threads do not contact the scale the bolt must be replaced (Fig. 73).

(5) Install each main cap and tighten bolts finger tight.

CRANKSHAFT MAIN BEARINGS (Continued)

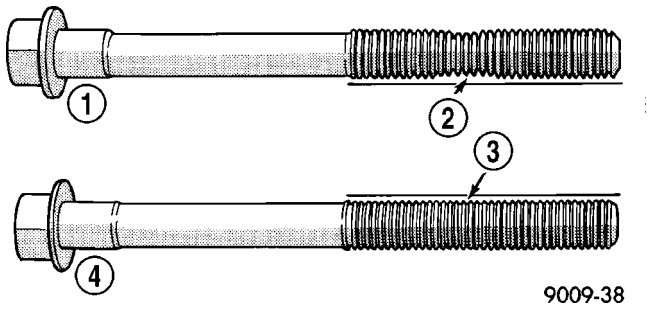

Fig. 73 Check for Stretched (Necked) Bolts

1 - STRETCHED BOLT
2 - THREADS ARE NOT STRAIGHT ON LINE
3 - THREADS ARE STRAIGHT ON LINE
4 - UNSTRETCHED BOLT

(6) Tighten number 1, 3 and 4 main cap bolts to 41 N·m + 1/4 Turn (30 ft. lbs.+ 1/4 Turn).

(7) Rotate the crankshaft until the number 6 piston is at TDC.

(8) To ensure correct thrust bearing alignment the following procedure must be done:

a. Move crankshaft all the way to the rear of its travel.

b. Then, move crankshaft all the way to the front of its travel.

c. Wedge an appropriate tool between the rear of the cylinder block and rear crankshaft counterweight. This will hold the crankshaft in it's most forward position.

d. Tighten the #2 Thrust Bearing cap bolts to 41 N·m + 1/4 Turn (30 ft. lbs.+ 1/4 Turn). Remove the holding tool.

(9) Install oil pan. (Refer to 9 - ENGINE/LUBRICATION/OIL PAN - INSTALLATION)

(10) Fill engine crankcase with proper oil to correct level.

CRANKSHAFT

DESCRIPTION

DESCRIPTION - 3.3L

The nodular iron crankshaft is supported by four main bearings, with number two position the thrust bearing (Fig. 76). Crankshaft end sealing is provided by front and rear rubber seals.

DESCRIPTION - 3.8L

The nodular iron crankshaft is supported by four main bearings, with number two position providing thrust bearing location (Fig. 77). Each main bearing cap has two vertical retaining bolts. The two center main caps have horizontal bolts to add increased rigidity to the lower engine block (Fig. 77). Crankshaft end sealing is provided by front and rear rubber seals.

STANDARD PROCEDURE - MEASURING CRANKSHAFT END PLAY

(1) Mount a dial indicator to front of engine with the locating probe on nose of crankshaft (Fig. 74).

(2) Move crankshaft all the way to the rear of its travel.

(3) Zero the dial indicator.

(4) Move crankshaft all the way to the front and read the dial indicator. (Refer to 9 - ENGINE - SPECIFICATIONS) for end play specification.

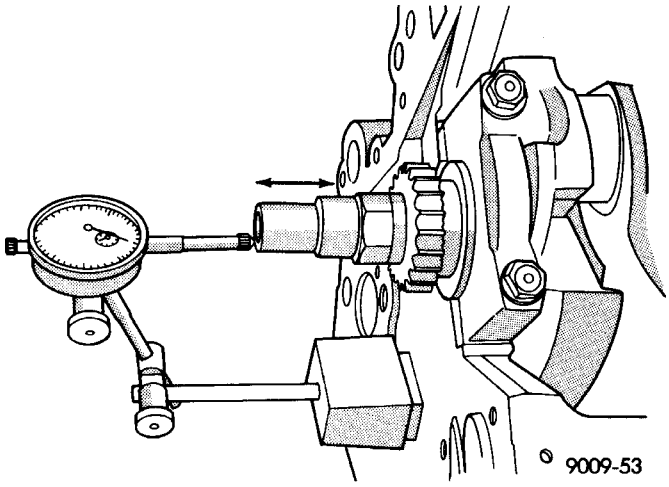

Fig. 74 Checking Crankshaft End Play - Typical

REMOVAL

(1) Remove the engine assembly (Refer to 9 - ENGINE - REMOVAL).

(2) Separate transaxle from engine.

(3) Mount engine on an engine stand.

(4) Remove the oil filter.

(5) Remove the oil pan and oil pick-up tube (Refer to 9 - ENGINE/LUBRICATION/OIL PAN - REMOVAL).

(6) Remove the timing chain cover (Refer to 9 - ENGINE/VALVE TIMING/TIMING CHAIN COVER - REMOVAL).

(7) Remove timing chain and sprockets (Refer to 9 - ENGINE/VALVE TIMING/TIMING CHAIN AND SPROCKETS - REMOVAL).

(8) Remove crankshaft rear oil seal and retainer (Refer to 9 - ENGINE/ENGINE BLOCK/CRANKSHAFT OIL SEAL - REAR - REMOVAL).

(9) Rotate the crankshaft until connecting rod cap is accessible.

(10) Mark connecting rod cap position using a suitable marker/scribe tool.

CRANKSHAFT (Continued)

(11) Remove connecting rod bearing cap. Use care to prevent damage to the crankshaft bearing surfaces.

(12) Repeat removal procedure for each connecting rod cap.

(13) Remove and discard the main bearing cross bolts and washers (3.8L engine only) (Fig. 77).

NOTE: Install new cross bolt and washer assembly (3.8L engine only) upon reassembly.

(14) Remove the main bearing cap bolts

(15) Remove the main bearing caps.

(16) Remove the crankshaft from engine block (Fig. 76) or (Fig. 77).

INSTALLATION

(1) For main bearing identification, refer to (Fig. 69). Lubricate with engine oil and install the crankshaft main bearing halves in the engine block.

(2) Position the crankshaft in engine block (Fig. 76) or (Fig. 77).

(3) Perform main bearing fitting procedure (Refer to 9 - ENGINE/ENGINE BLOCK/CRANKSHAFT MAIN BEARINGS - STANDARD PROCEDURE).

(4) Inspect main cap bolts for stretching (Fig. 75). Replace bolts that are stretched.

NOTE: The main cap bolts should be examined before reuse. Bolt stretch can be checked by holding a scale or straight edge against the threads. If all the threads do not contact the scale the bolt must be replaced (Fig. 75).

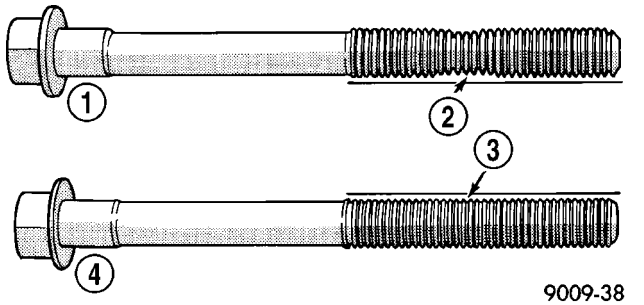

Fig. 75 Check for Stretched (Necked) Bolts

1 - STRETCHED BOLT
2 - THREADS ARE NOT STRAIGHT ON LINE
3 - THREADS ARE STRAIGHT ON LINE
4 - UNSTRETCHED BOLT

(5) Install the main bearing caps and bolts. Tighten bolts to 41 N·m (30 ft. lbs.) plus ¼ turn.

NOTE: Install new cross bolt and washer assembly (3.8L engine only) upon reassembly.

(6) Install and tighten the NEW cross bolts and washer assemblies (3.8L engine only) to 61 N·m (45 ft. lbs.) (Fig. 77).

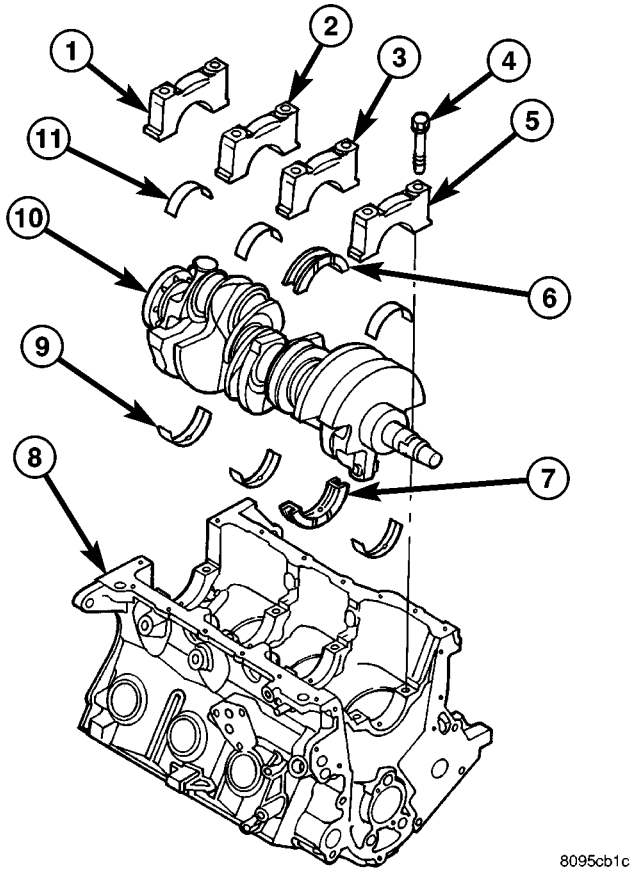

Fig. 76 CRANKSHAFT AND BLOCK - 3.3L

1 - MAIN BEARING CAP No. 4
2 - MAIN BEARING CAP No. 3
3 - MAIN BEARING CAP No. 2
4 - MAIN BEARING CAP BOLT (QTY. 2 PER CAP)
5 - MAIN BEARING CAP No. 1
6 - LOWER MAIN BEARING - THRUST
7 - UPPER MAIN BEARING - THRUST
8 - ENGINE BLOCK
9 - UPPER MAIN BEARINGS
10 - CRANKSHAFT
11 - LOWER MAIN BEARINGS

(7) Position and install the connecting rod and bearing caps on the crankshaft (Refer to 9 - ENGINE/ENGINE BLOCK/CONNECTING ROD BEARINGS - STANDARD PROCEDURE).

(8) Install the crankshaft rear oil seal (Refer to 9 - ENGINE/ENGINE BLOCK/CRANKSHAFT OIL SEAL - REAR - INSTALLATION).

(9) Install the crankshaft sprocket (Refer to 9 - ENGINE/VALVE TIMING/TIMING CHAIN AND SPROCKETS - INSTALLATION).

(10) Install the timing chain and camshaft sprocket (Refer to 9 - ENGINE/VALVE TIMING/TIMING CHAIN AND SPROCKETS - INSTALLATION).

CRANKSHAFT (Continued)

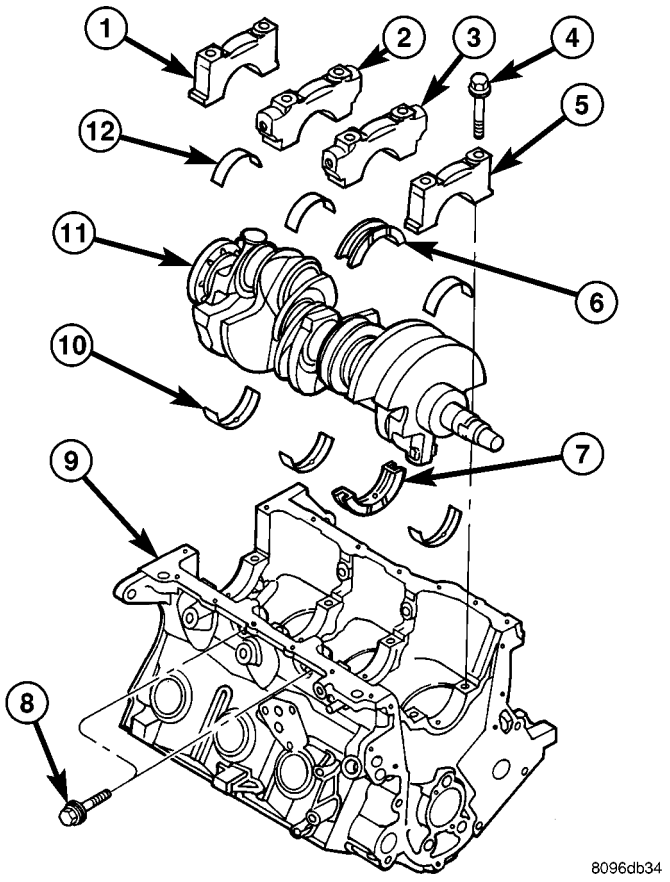

Fig. 77 CRANKSHAFT AND BLOCK - 3.8L

1 - MAIN BEARING CAP No. 4
2 - MAIN BEARING CAP No. 3
3 - MAIN BEARING CAP No. 2
4 - MAIN BEARING CAP BOLT
5 - MAIN BEARING CAP No. 1
6 - THRUST MAIN BEARING - LOWER
7 - THRUST MAIN BEARING - UPPER
8 - MAIN BEARING CAP CROSS BOLT
9 - ENGINE BLOCK
10 - MAIN BEARING - UPPER
11 - CRANKSHAFT
12 - MAIN BEARING - LOWER

(11) Install the timing chain cover (Refer to 9 - ENGINE/VALVE TIMING/TIMING CHAIN COVER - INSTALLATION).

(12) Install the oil pick-up tube and oil pan (Refer to 9 - ENGINE/LUBRICATION/OIL PAN - INSTALLATION).

(13) Install the transaxle to the engine.

(14) Install the engine assembly (Refer to 9 - ENGINE - INSTALLATION).

CRANKSHAFT OIL SEAL - FRONT

REMOVAL

(1) Disconnect negative cable from battery.

(2) Raise vehicle on hoist. Remove right wheel and inner splash shield.

(3) Remove accessory drive belt. (Refer to 7 - COOLING/ACCESSORY DRIVE/DRIVE BELTS - REMOVAL)

(4) Remove crankshaft damper. (Refer to 9 - ENGINE/ENGINE BLOCK/VIBRATION DAMPER - REMOVAL)

(5) Position Special Tool 6341A on crankshaft nose. Carefully screw the tool into the seal until it engages firmly (Fig. 78). Be careful not to damage that crankshaft seal surface of cover

(6) Remove oil seal by turning the forcing screw until the seal disengages from the cover (Fig. 79).

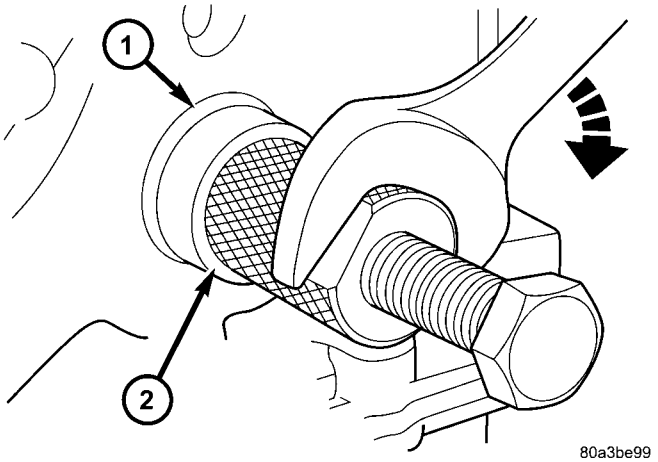

Fig. 78 Engaging Tool into Seal

1 - SEAL
2 - SPECIAL TOOL 6341A

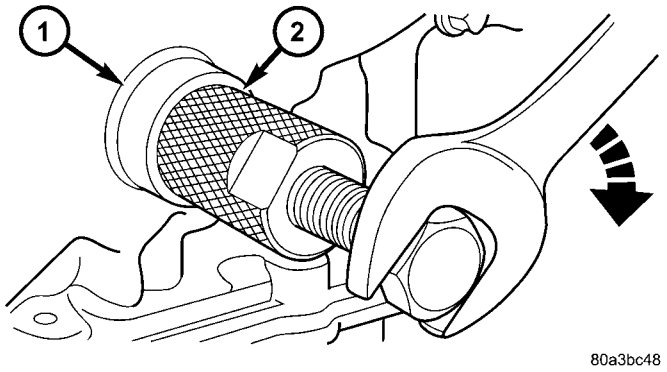

Fig. 79 Crankshaft Front Seal Removal

1 - SEAL
2 - SPECIAL TOOL 6341A

INSTALLATION

(1) Position Special Tool C-4992-2 Guide, on the crankshaft nose (Fig. 80).

CRANKSHAFT OIL SEAL - FRONT (Continued)

(2) Position new seal over the guide with the seal spring in the direction of the engine front cover (Fig. 80).

(3) Install seal using Special Tool C-4992-1 until seal is flush with cover. (Fig. 80).

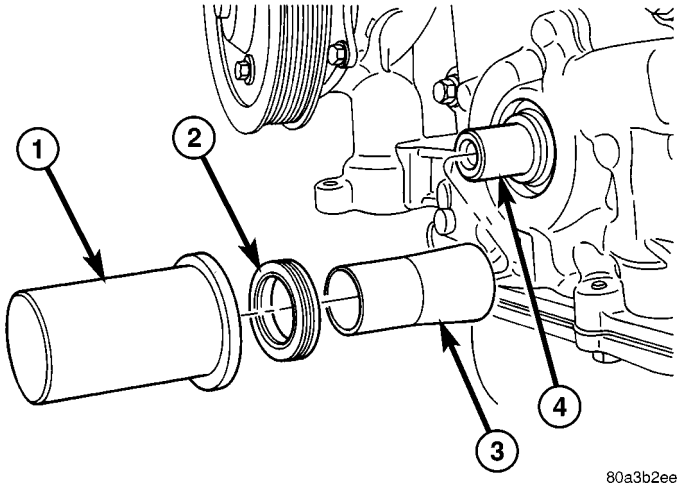

Fig. 80 CRANKSHAFT FRONT SEAL INSTALLATION

1 - SPECIAL TOOL C-4992-1
2 - SEAL
3 - SPECIAL TOOL C-4992-2
4 - CRANKSHAFT

(4) Install crankshaft damper. (Refer to 9 - ENGINE/ENGINE BLOCK/VIBRATION DAMPER - INSTALLATION)

(5) Install accessory drive belt. (Refer to 7 - COOLING/ACCESSORY DRIVE/DRIVE BELTS - INSTALLATION)

(6) Install inner splash shield and right front wheel.

(7) Lower vehicle and connect negative cable to battery.

CRANKSHAFT OIL SEAL - REAR

REMOVAL

(1) Remove the transaxle. Refer to TRANSAXLE AND POWER TRANSFER UNIT for procedure.

(2) Remove the flex plate. (Refer to 9 - ENGINE/ENGINE BLOCK/FLEX PLATE - REMOVAL)

(3) Insert a 3/16 flat bladed pry tool between the dust lip and the metal case of the crankshaft seal. Angle the pry tool (Fig. 81) through the dust lip against metal case of the seal. Pry out seal.

CAUTION: Do not permit the pry tool blade to contact crankshaft seal surface. Contact of the pry tool blade against crankshaft edge (chamfer) is permitted.

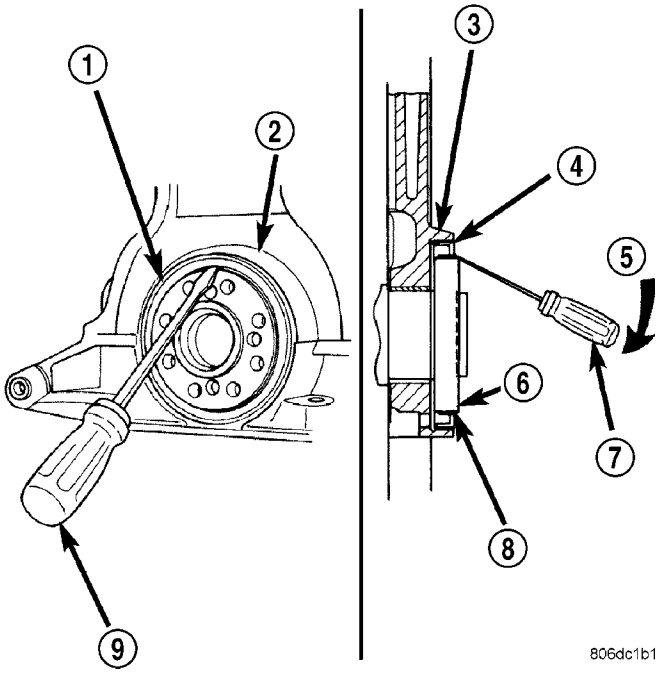

Fig. 81 Crankshaft Rear Oil Seal - Removal

1 - REAR CRANKSHAFT SEAL
2 - ENGINE BLOCK
3 - ENGINE BLOCK
4 - REAR CRANKSHAFT SEAL METAL CASE
5 - PRY IN THIS DIRECTION
6 - CRANKSHAFT
7 - SCREWDRIVER
8 - REAR CRANKSHAFT SEAL DUST LIP
9 - SCREWDRIVER

INSTALLATION

CAUTION: If burr or scratch is present on the crankshaft edge (chamfer), cleanup with 400 grit sand paper to prevent seal damage during installation of new seal.

(1) Place Special Tool 6926-1 magnetic pilot tool on crankshaft (Fig. 82).

(2) Place seal over Special Tool 6926-1 Pilot. Using Special Tool 6926-2 Installer with C-4171 Handle, drive seal into the retainer housing (Fig. 82).

(3) Install the flex plate. (Refer to 9 - ENGINE/ENGINE BLOCK/FLEX PLATE - INSTALLATION)

(4) Install transaxle. Refer to TRANSAXLE AND POWER TRANSFER UNIT for procedure.

CRANKSHAFT OIL SEAL - REAR (Continued)

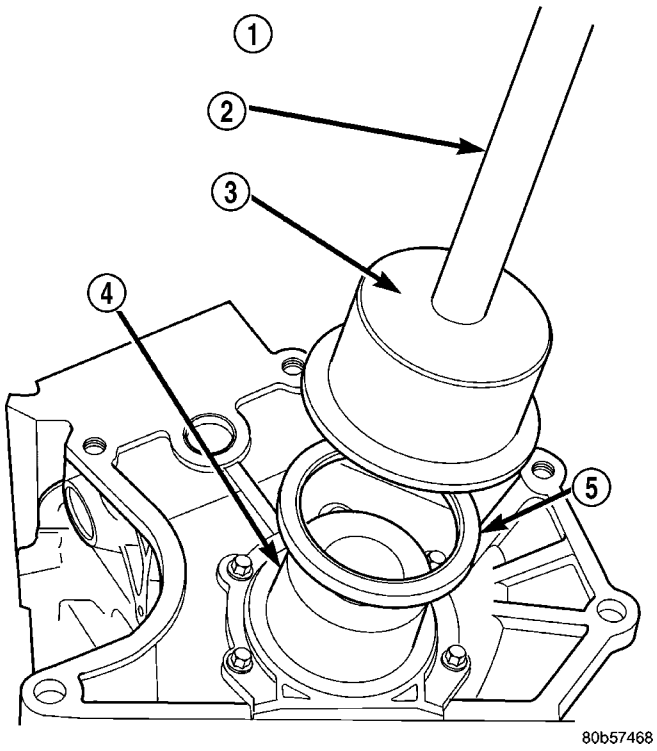

Fig. 82 Rear Crankshaft Oil Seal—Installation

1 - SPECIAL TOOLS:
2 - C-4171 HANDLE
3 - 6926–2 INSTALLER
4 - 6926–1 GUIDE
5 - SEAL

CRANKSHAFT REAR OIL SEAL RETAINER

REMOVAL

(1) Remove crankshaft rear oil seal (Refer to 9 - ENGINE/ENGINE BLOCK/CRANKSHAFT OIL SEAL - REAR - REMOVAL).

(2) Remove oil pan (Refer to 9 - ENGINE/LUBRICATION/OIL PAN - REMOVAL).

(3) Remove oil seal retainer screws (Fig. 83).

(4) Remove oil seal retainer (Fig. 83).

(5) Clean engine block and retainer of oil and gasket material. Make sure surfaces are clean and free of oil.

INSTALLATION

(1) Position new gasket and install retainer on block (Fig. 83). Tighten attaching screws to 12 N·m (105 in. lbs.).

(2) Install oil pan (Refer to 9 - ENGINE/LUBRICATION/OIL PAN - INSTALLATION).

(3) Install oil seal (Refer to 9 - ENGINE/ENGINE BLOCK/CRANKSHAFT OIL SEAL - REAR - INSTALLATION).

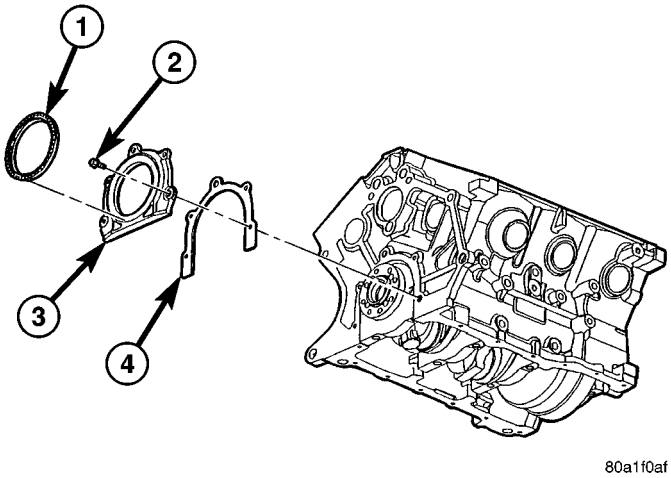

Fig. 83 CRANKSHAFT REAR OIL SEAL

1 - OIL SEAL
2 - BOLT
3 - RETAINER - OIL SEAL
4 - GASKET

VIBRATION DAMPER

REMOVAL

(1) Disconnect negative cable from battery.

(2) Raise vehicle on hoist.

(3) Remove the right front wheel and inner splash shield.

(4) Remove the accessory drive belt. (Refer to 7 - COOLING/ACCESSORY DRIVE/DRIVE BELTS - REMOVAL)

(5) Remove vibration damper bolt.

(6) Insert Special Tool 8450 into crankshaft nose (Fig. 84).

(7) Position 3-jaw puller Special Tool 1026 on damper as shown in (Fig. 84). Turn puller forcing screw until damper releases from crankshaft.

(8) Remove the crankshaft vibration damper.

INSTALLATION

(1) Install crankshaft vibration damper using the forcing screw, nut, and thrust bearing/washer from Special Tool 8452 (Fig. 85).

NOTE: To minimize friction and prolong tool life, lubricate the threads on the forcing screw of Special Tool 8452.

(2) Position vibration damper on crankshaft.

(3) Screw Special Tool 8452 into crankshaft until the bolt seats. Turn the nut to install damper until it seats fully.

(4) Remove Special Tool 8452.

(5) Install vibration damper bolt. Torque bolt to 54 N·m (40 ft. lbs.).

VIBRATION DAMPER (Continued)

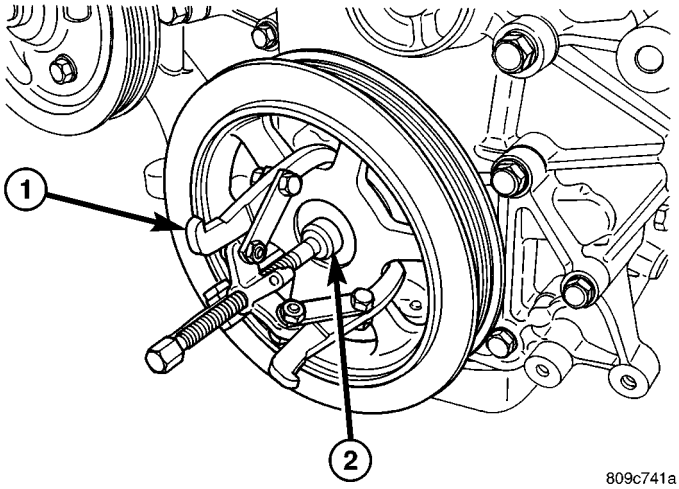

Fig. 84 Vibration Damper - Removal

1 - SPECIAL TOOL 8450 - INSERT
2 - SPECIAL TOOL 1026 - 3 JAW PULLER

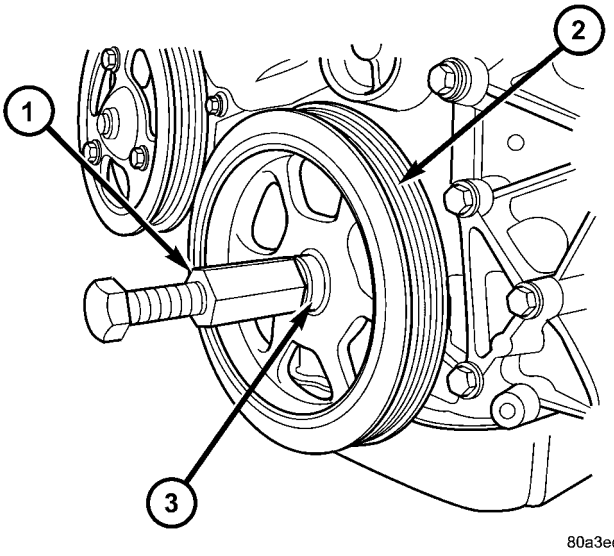

Fig. 85 Vibration Damper - Installation

1 - FORCING SCREW / NUT FROM SPECIAL TOOL 8452
2 - VIBRATION DAMPER
3 - THRUST BEARING / WASHER

(6) Install the accessory drive belt. (Refer to 7 - COOLING/ACCESSORY DRIVE/DRIVE BELTS - INSTALLATION)

(7) Install inner splash shield and right front wheel.

(8) Connect negative cable to battery.

FLEX PLATE

REMOVAL

(1) Remove the transaxle (Refer to 21 - TRANSMISSION/TRANSAXLE/AUTOMATIC - 41TE - REMOVAL).

(2) Remove flex plate attaching bolts.

(3) Remove the flex plate (Fig. 86).

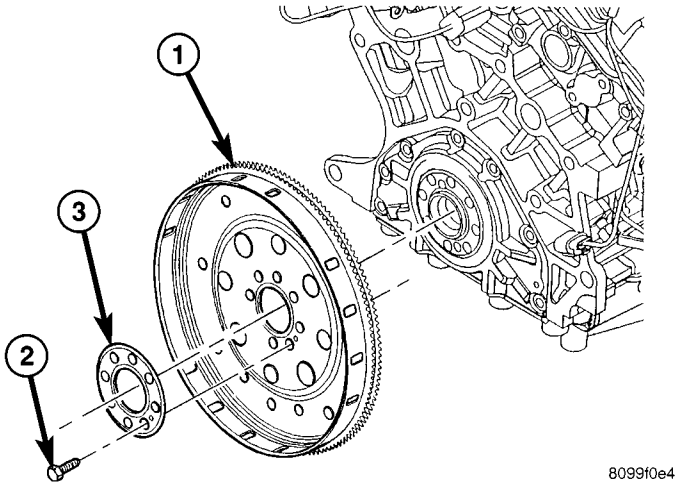

Fig. 86 FLEX PLATE

1 - FLEX PLATE
2 - BOLT (QTY. 8)
3 - BACKING PLATE

INSTALLATION

(1) Position flex plate with backing plate on the crankshaft (Fig. 86).

(2) Apply Mopar® Lock & Seal Adhesive to the flex plate bolts.

(3) Install flex plate bolts (Fig. 86). Tighten bolts to 95 N·m (70 ft. lbs.).

(4) Install the transaxle (Refer to 21 - TRANSMISSION/TRANSAXLE/AUTOMATIC - 41TE - INSTALLATION).

ENGINE MOUNTING

DESCRIPTION

The engine mounting system consist of four mounts; right and a left side support the powertrain, and a front and a rear mount control powertrain torque. The right side mount is a hydro-type (Fig. 87), all others are of molded rubber material.

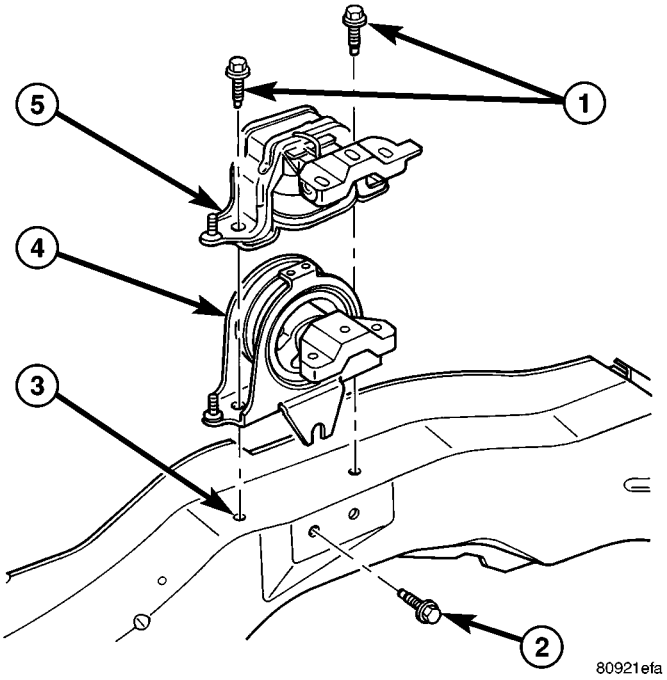

Fig. 87 Engine Hydro-type Mount - Right Side

1 - BOLT
2 - BOLT
3 - FRAME RAIL
4 - RIGHT MOUNT - 2.4L ENGINE
5 - RIGHT MOUNT - 3.3/3.8L ENGINE

FRONT MOUNT

REMOVAL

(1) Support the engine and transmission assembly with a floor jack so it will not rotate.

(2) Remove the front engine mount through bolt from the insulator and front crossmember mounting bracket (Fig. 88).

(3) Remove six screws from air dam to allow access to the front mount screws.

(4) Remove the front engine mount screws and remove the insulator assembly (Fig. 88).

(5) Remove the front mounting bracket, if necessary (Fig. 88).

INSTALLATION

(1) Install the front mounting bracket, if removed (Fig. 88).

(2) Install the front engine mount through bolt from the insulator and front crossmember mounting bracket (Fig. 88).

(3) Install the insulator assembly and mounting screws (Fig. 88).

FRONT MOUNT (Continued)

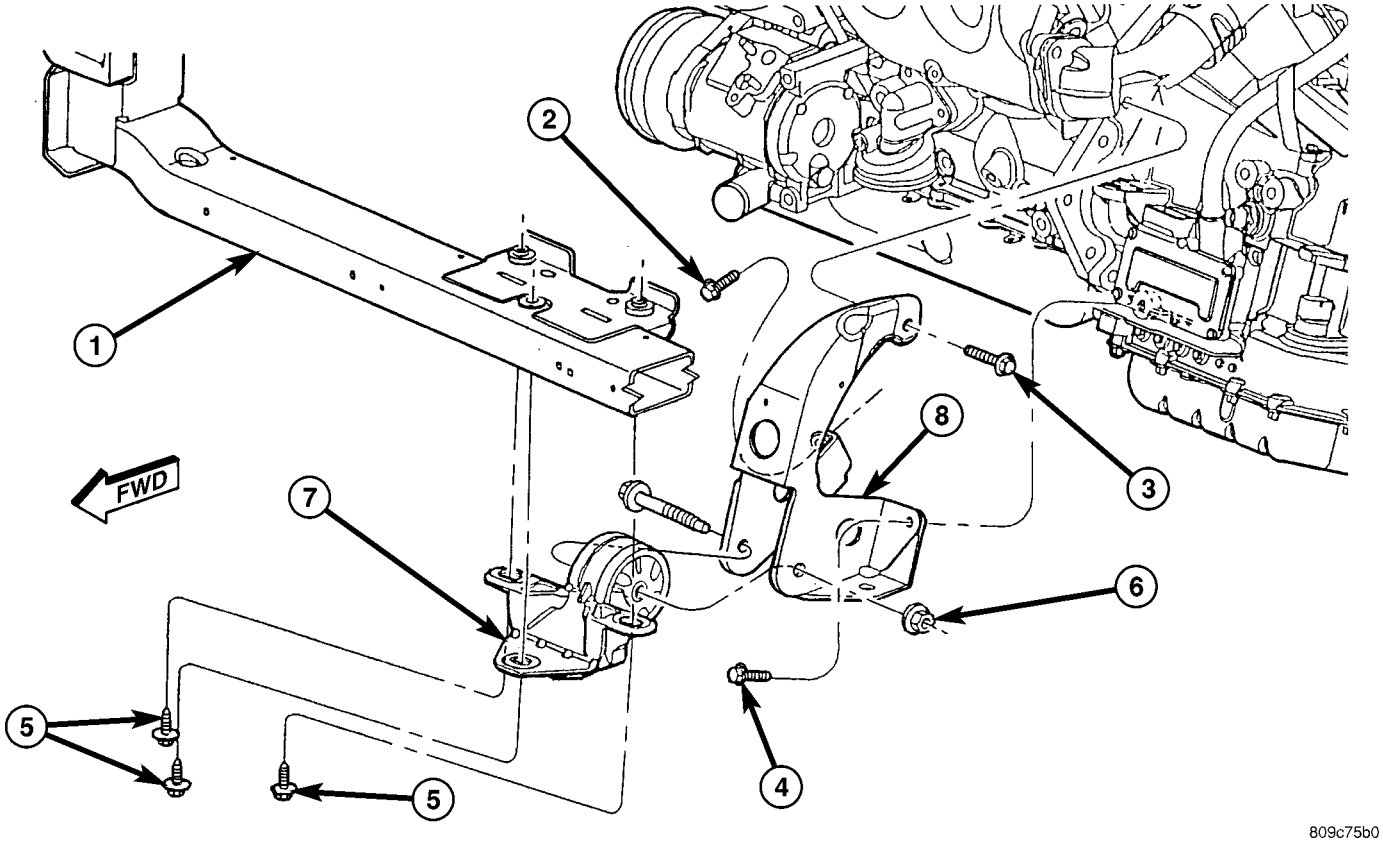

Fig. 88 Engine Mounting - Front

1 - CROSSMEMBER
2 - BOLT - 68 N·m (50 ft. lbs.)
3 - BOLT - 102 N·m (75 ft. lbs.)
4 - BOLT - 68 N·m (50 ft. lbs.)
5 - BOLT 54 N·m (40 ft. lbs.)
6 - NUT - 68 N·m (50 ft. lbs.)
7 - MOUNT - ENGINE FRONT
8 - BRACKET - ENGINE FRONT MOUNT

LEFT MOUNT

REMOVAL

(1) Raise the vehicle on hoist.
(2) Remove the left front wheel.
(3) Remove the left mount through bolt access cover.
(4) Support the transaxle with a suitable jack.
(5) Remove the engine front mount through bolt to allow left mount removal clearance (Fig. 88).
(6) Remove the left mount through frame rail bolt (Fig. 89).

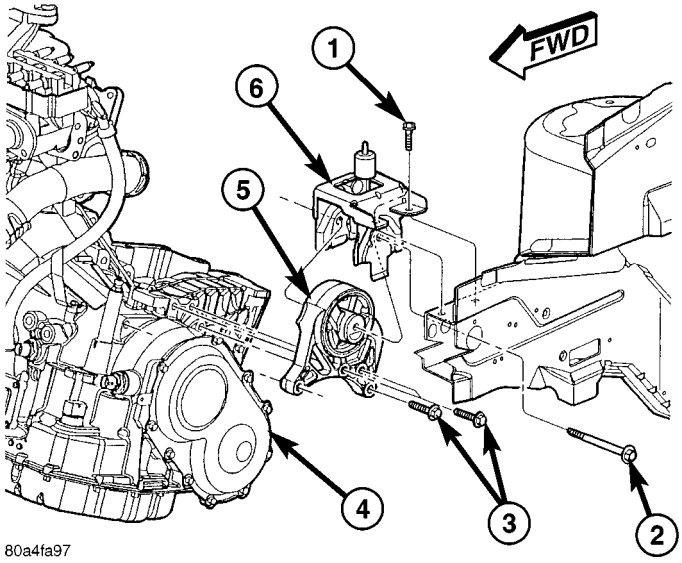

Fig. 89 LEFT MOUNT TO BRACKET

1 - BOLT - BRACKET TO FRAME RAIL 68 N·m (50 ft. lbs.)
2 - BOLT - MOUNT TO RAIL THRU 75 N·m (55 ft. lbs.)
3 - BOLT - LEFT MOUNT TO TRANSAXLE 54 N·m (40 ft. lbs.)
4 - TRANSAXLE
5 - MOUNT - LEFT
6 - BRACKET - LEFT MOUNT

(7) Lower transaxle for access to horizontal bolts.
(8) Remove the horizontal bolts from the mount to the transaxle (Fig. 90).

NOTE: To remove mount, additional lowering of transaxle may be required.

(9) Remove left mount.

INSTALLATION

(1) Install left mount on transaxle (Fig. 90).
(2) Raise transaxle with jack until left mount is in position.
(3) Install left mount through bolt (Fig. 89).
(4) Install left mount through bolt access cover.
(5) Install front mount through bolt (Fig. 88).
(6) Install left front wheel.
(7) Lower vehicle.

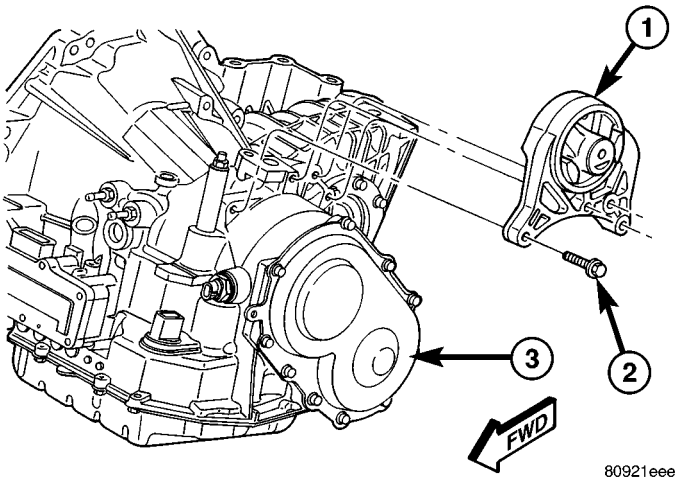

Fig. 90 LEFT MOUNT - 41TE TRANSAXLE

1 - LEFT MOUNT ASSEMBLY
2 - BOLT - 54 N·m (40 ft. lbs.)
3 - TRANSAXLE - 41TE

REAR MOUNT

REMOVAL

(1) Raise vehicle on hoist.
(2) Remove the rear mount heat shield (Fig. 91).

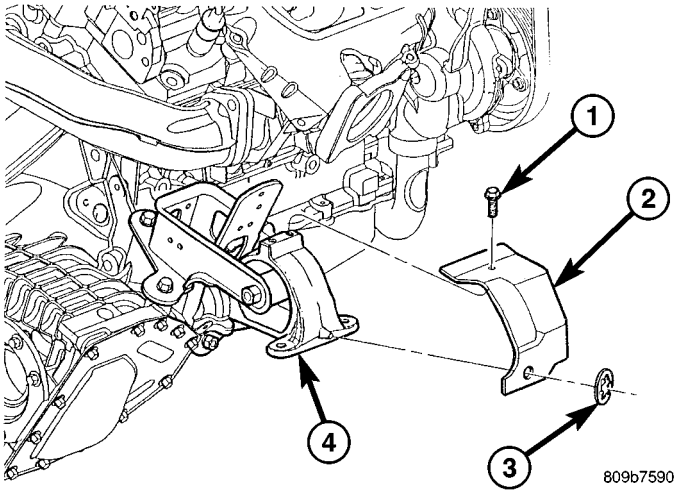

Fig. 91 Rear Mount Heat Shield

1 - BOLT - HEAT SHIELD 11 N·m (100 in. lbs.)
2 - HEAT SHIELD
3 - CLIP
4 - REAR MOUNT

(3) Remove the through bolt from the mount and rear mount bracket (Fig. 92).
(4) Remove the mount bolts (Fig. 92).
(5) Remove the rear mount (Fig. 92).
(6) For rear mount bracket removal, remove the bolts attaching bracket to transaxle (Fig. 93).
(7) Remove rear mount bracket.

REAR MOUNT (Continued)

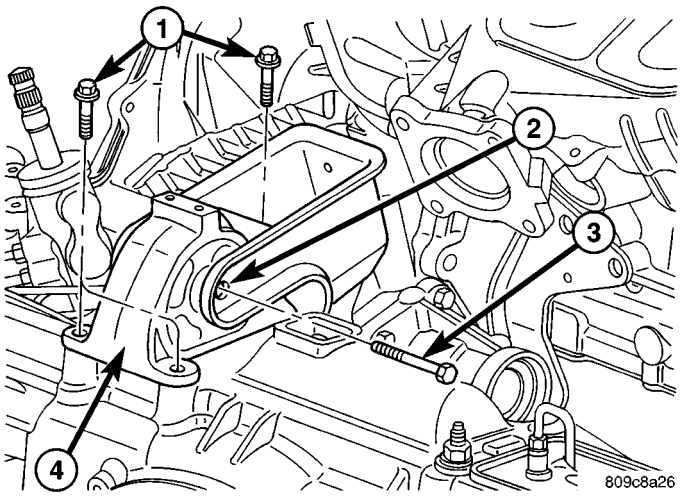

Fig. 92 Rear Mount

1 - BOLT 54 N·m (40 ft. lbs.)
2 - REAR MOUNT BRACKET
3 - THRU-BOLT 54 N·m (40 ft. lbs.)
4 - REAR MOUNT

INSTALLATION

(1) Install rear mount bracket, if removed (Fig. 93).

(2) Install the rear mount and bolts (Fig. 92). Tighten bolts to 54 N·m (40 ft. lbs.).

(3) Install the mount through bolt to the mount and bracket (Fig. 92). Tighten through bolt to 54 N·m (40 ft. lbs.).

(4) Install the rear mount heat shield (Fig. 91).

(5) Lower vehicle on hoist.

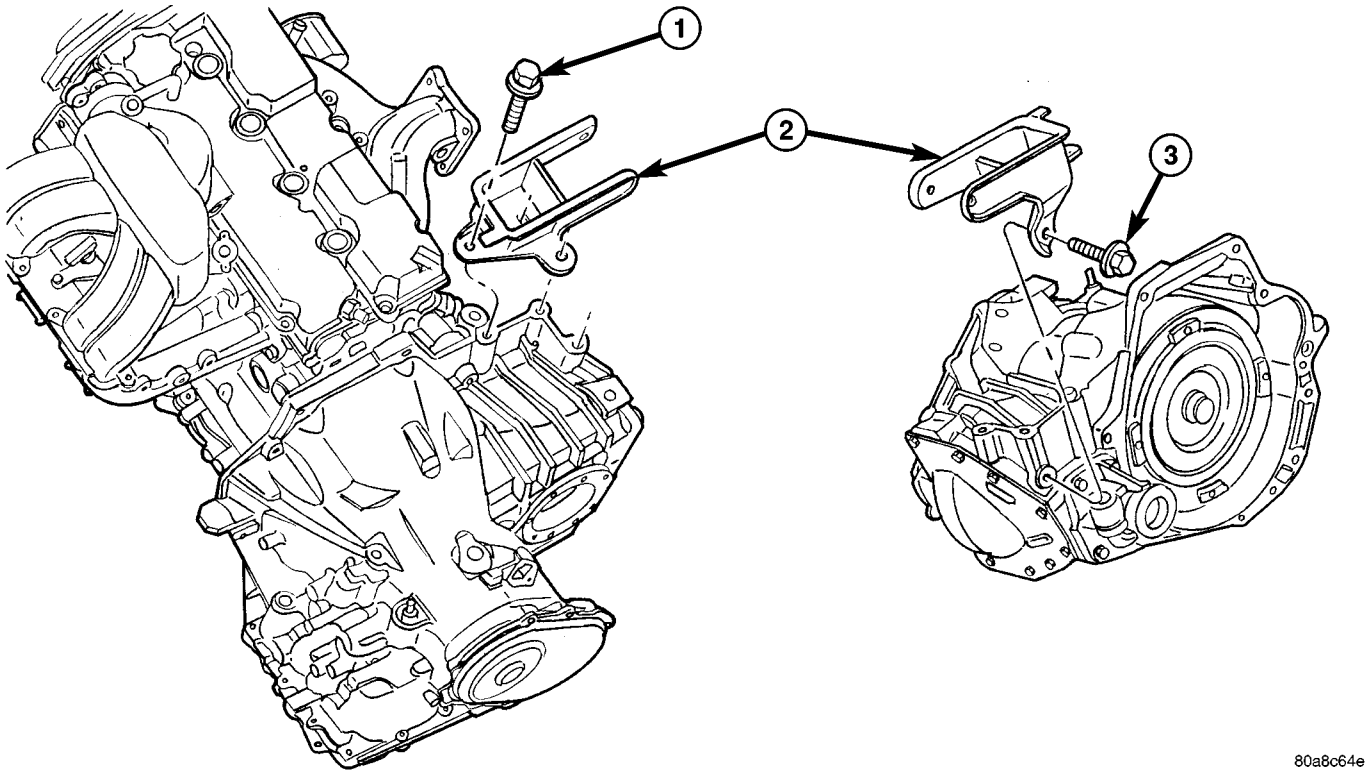

Fig. 93 Rear Mount Bracket - (all engines)

1 - BOLT - VERTICAL 102 N·m (75 ft. lbs.)
2 - BRACKET - REAR MOUNT
3 - BOLT - HORIZONTAL 102 N·m (75 ft. lbs.)

RIGHT MOUNT

REMOVAL

(1) Remove air cleaner housing lid and clean air hose from throttle body.
(2) Remove air cleaner element and housing.
(3) Disconnect make-up air hose from cylinder head cover.
(4) Remove the load on the right engine mount by carefully supporting the engine assembly with a floor jack.
(5) Disconnect electrical harness support clips from engine mount bracket.
(6) Remove the bolts attaching the engine mount to the frame rail (Fig. 94).
(7) Remove the three bolts attaching the engine mount to the engine bracket (Fig. 94).
(8) Remove the right engine mount (Fig. 94).

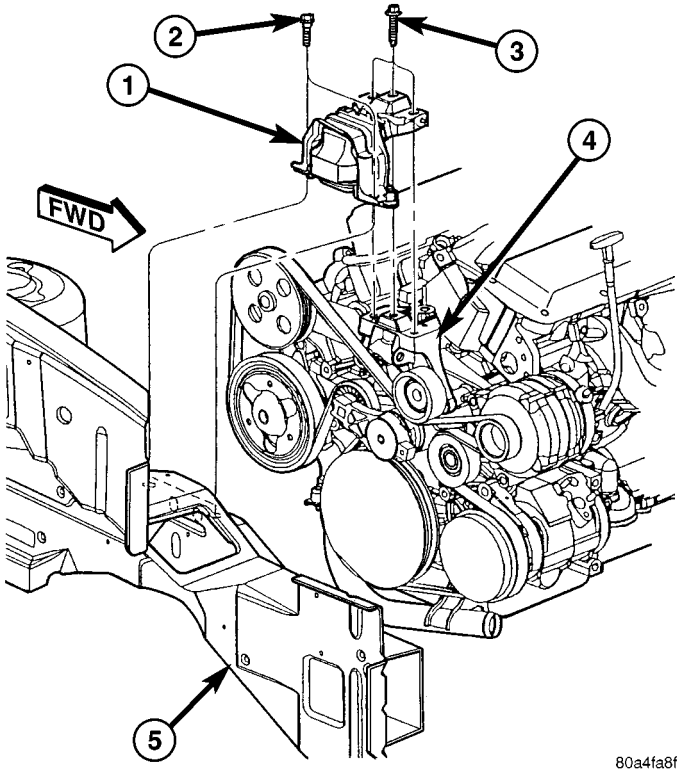

Fig. 94 Right Engine Mount

1 - RIGHT ENGINE MOUNT
2 - BOLT - MOUNT TO FRAME RAIL
3 - BOLT - MOUNT TO ENGINE
4 - ENGINE MOUNT BRACKET
5 - RIGHT FRAME RAIL

INSTALLATION

(1) Install engine bracket (if removed). Tighten bolts to 33 N·m (24 ft. lbs.).
(2) Position right engine mount and install frame rail to mount bolts (Fig. 94). Tighten bolts to 68 N·m (50 ft. lbs.).
(3) Install the mount to engine bracket bolts and tighten to 54 N·m (40 ft. lbs.). (Fig. 94)
(4) Connect electrical harness support clips to engine mount bracket.
(5) Remove jack from under engine.
(6) Connect make-up air hose to cylinder head cover.
(7) Install air cleaner housing and element.
(8) Install air cleaner housing lid and clean air tube to throttle body.

LUBRICATION

DESCRIPTION

The lubrication system is a full flow filtration pressure feed type. The oil pump is mounted in the timing chain cover and is driven by the crankshaft

OPERATION

Oil from the oil pan is pumped by a internal gear type oil pump directly coupled to the crankshaft. The pressure is regulated by a relief valve located in the timing chain cover. The oil is pumped through an oil filter and feeds a main oil gallery. This oil gallery feeds oil under pressure to the main and rod bearings, camshaft bearings. Passages in the cylinder block feed oil to the hydraulic lifters and rocker shaft brackets which feeds the rocker arm pivots (Fig. 95).

DIAGNOSIS AND TESTING - ENGINE OIL PRESSURE

(1) Disconnect and remove oil pressure switch (Refer to 9 - ENGINE/LUBRICATION/OIL PRESSURE SENSOR/SWITCH - REMOVAL).
(2) Install Special Tools C-3292 Gauge with 8406 Adaptor. For Special Tool identification, (Refer to 9 - ENGINE - SPECIAL TOOLS).
(3) Start engine and record oil pressure. Refer to Oil Pressure in Engine Specifications for the correct pressure (Refer to 9 - ENGINE - SPECIFICATIONS).

LUBRICATION (Continued)

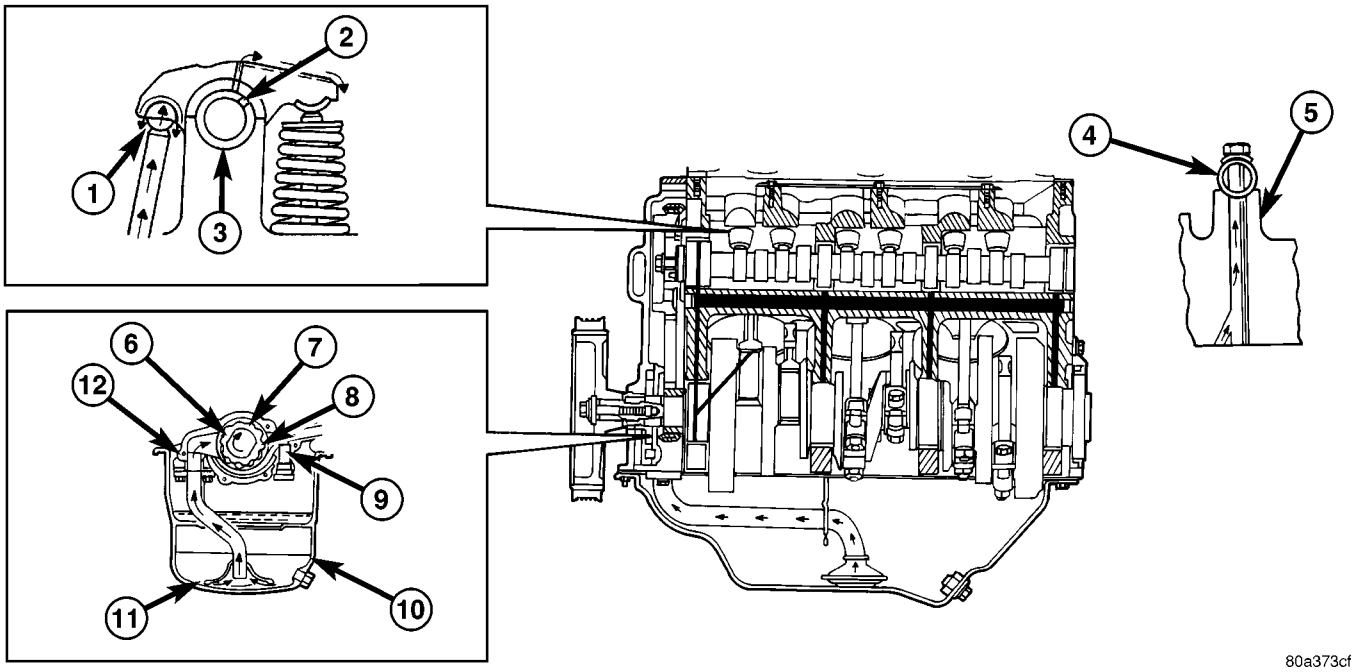

Fig. 95 Engine Oiling System

1 - OIL SUPPLY FOR BALL SOCKET THROUGH PUSH ROD
2 - OIL SUPPLY PASSAGE FROM SHAFT TO ROCKER ARM
3 - ROCKER SHAFT
4 - OIL FLOWS TO ONLY ONE PEDASTAL ON EACH HEAD; THIRD FROM REAR ON RIGHT HEAD, THIRD FROM FRONT ON LEFT HEAD
5 - ROCKER SHAFT TOWER
6 - CRANKSHAFT
7 - OUTER ROTOR
8 - INNER ROTOR
9 - RELIEF VALVE
10 - OIL PAN
11 - OIL SCREEN
12 - OIL PUMP CASE

OIL

STANDARD PROCEDURE

STANDARD PROCEDURE - ENGINE OIL AND FILTER CHANGE

Change engine oil at mileage and time intervals described in the Maintenance Schedule. (Refer to LUBRICATION & MAINTENANCE/MAINTENANCE SCHEDULES - DESCRIPTION)

WARNING: NEW OR USED ENGINE OIL CAN BE IRRITATING TO THE SKIN. AVOID PROLONGED OR REPEATED SKIN CONTACT WITH ENGINE OIL. CONTAMINANTS IN USED ENGINE OIL, CAUSED BY INTERNAL COMBUSTION, CAN BE HAZARDOUS TO YOUR HEALTH. THOROUGHLY WASH EXPOSED SKIN WITH SOAP AND WATER. DO NOT WASH SKIN WITH GASOLINE, DIESEL FUEL, THINNER, OR SOLVENTS, HEALTH PROBLEMS CAN RESULT. DO NOT POLLUTE, DISPOSE OF USED ENGINE OIL PROPERLY. CONTACT YOUR DEALER OR GOVERNMENT AGENCY FOR LOCATION OF COLLECTION CENTER IN YOUR AREA.

Run engine until achieving normal operating temperature.

(1) Position the vehicle on a level surface and turn engine off.

(2) Open hood, remove oil fill cap (Fig. 97).

(3) Hoist and support vehicle on safety stands. Refer to Hoisting and Jacking Recommendations. (Refer to LUBRICATION & MAINTENANCE/HOISTING - STANDARD PROCEDURE)

(4) Place a suitable drain pan under crankcase drain (Fig. 96).

(5) Remove drain plug from crankcase (Fig. 96) and allow oil to drain into pan. Inspect drain plug threads for stretching or other damage. Replace drain plug and gasket if damaged.

(6) Remove oil filter. (Refer to 9 - ENGINE/LUBRICATION/OIL FILTER - REMOVAL)

(7) Install and tighten drain plug in crankcase.

(8) Install new oil filter. (Refer to 9 - ENGINE/LUBRICATION/OIL FILTER - INSTALLATION)

(9) Lower vehicle and fill crankcase with specified type and amount of engine oil. (Refer to LUBRICATION & MAINTENANCE/FLUID TYPES - DESCRIPTION)

(10) Install oil fill cap.

OIL (Continued)

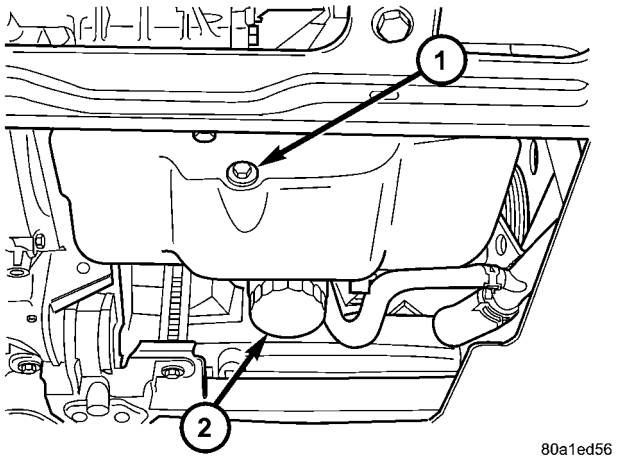

Fig. 96 Engine Oil Drain Plug and Oil Filter

1 - DRAIN PLUG
2 - OIL FILTER

(11) Start engine and inspect for leaks.
(12) Stop engine and inspect oil level.

NOTE: Care should be exercised when disposing used engine oil after it has been drained from a vehicle engine. Refer to the WARNING listed above.

STANDARD PROCEDURE - ENGINE OIL LEVEL CHECK

The best time to check engine oil level is after it has sat overnight, or if the engine has been running, allow the engine to be shut off for at least 5 minutes before checking oil level.

Checking the oil while the vehicle is on level ground will improve the accuracy of the oil level reading (Fig. 97). Add only when the level is at or below the ADD mark.

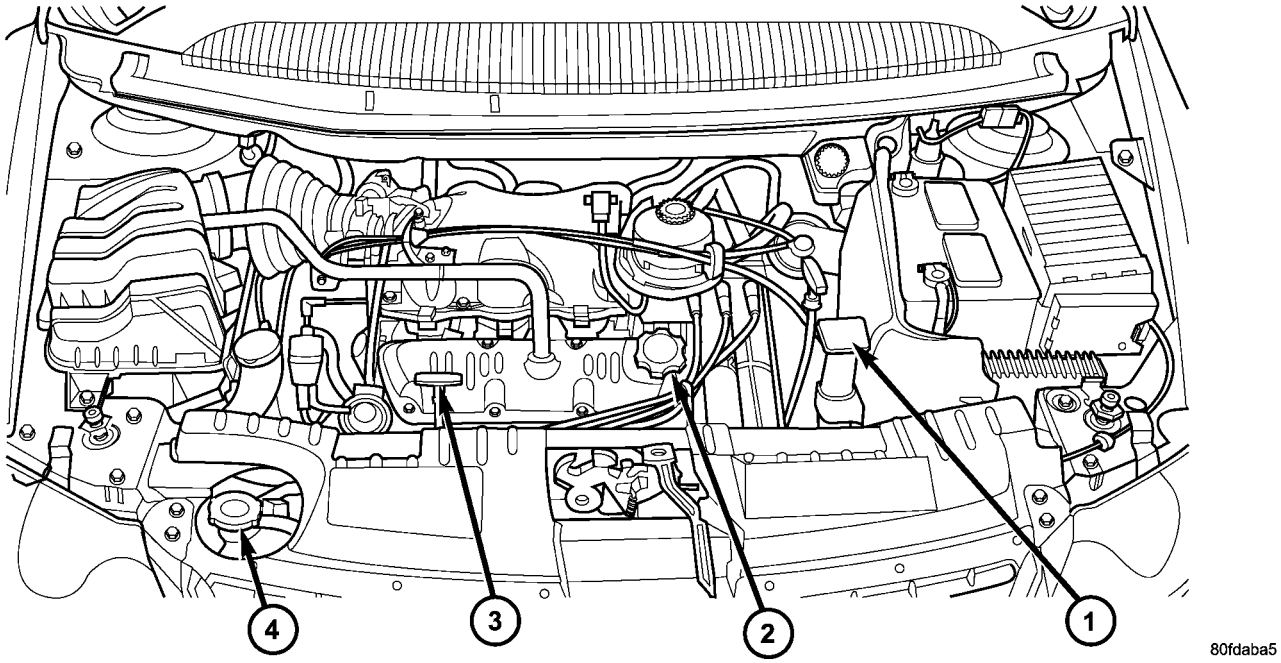

Fig. 97 Engine Oil Level Dipstick and Fill Locations

1 - COOLANT RECOVERY CONTAINER
2 - ENGINE OIL FILL CAP
3 - ENGINE OIL LEVEL DIPSTICK
4 - RADIATOR PRESSURE CAP

OIL COOLER & LINES

DESCRIPTION

An engine oil cooler is used on 3.3/3.8L engines (Heavy Duty Cooling Only) (Fig. 99). The cooler is a coolant-to-oil type and mounted between the oil filter and engine block.

OPERATION

Engine oil travels from the oil filter and into the oil cooler. Engine oil then exits the cooler into the main gallery. Engine coolant flows into the cooler from the heater return tube and exits into the water pump inlet.

REMOVAL

(1) Drain cooling system (Refer to 7 - COOLING - STANDARD PROCEDURE - COOLING SYSTEM DRAINING).

(2) Disconnect oil cooler inlet and outlet hoses (Fig. 98).

(3) Remove oil filter.

(4) Remove oil cooler attachment fitting (Fig. 99).

(5) Remove oil cooler.

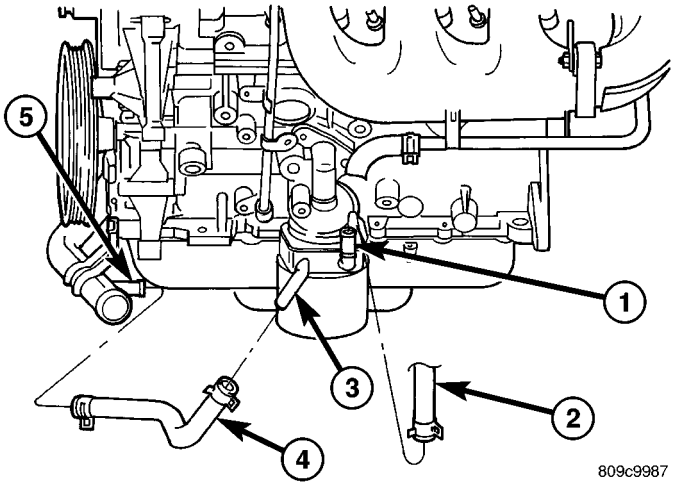

Fig. 98 Engine Oil Cooler Hoses

1 - OIL COOLER INLET TUBE
2 - INLET HOSE
3 - OIL COOLER OUTLET TUBE
4 - OUTLET HOSE
5 - WATER PUMP INLET TUBE

INSTALLATION

(1) Lubricate seal and position oil cooler to connector fitting on oil filter adapter (Fig. 99).

NOTE: Position the flat side of oil cooler parallel to oil pan rail.

(2) Install oil cooler attachment fitting and tighten to 27 N·m (20 ft. lbs.) (Fig. 99).

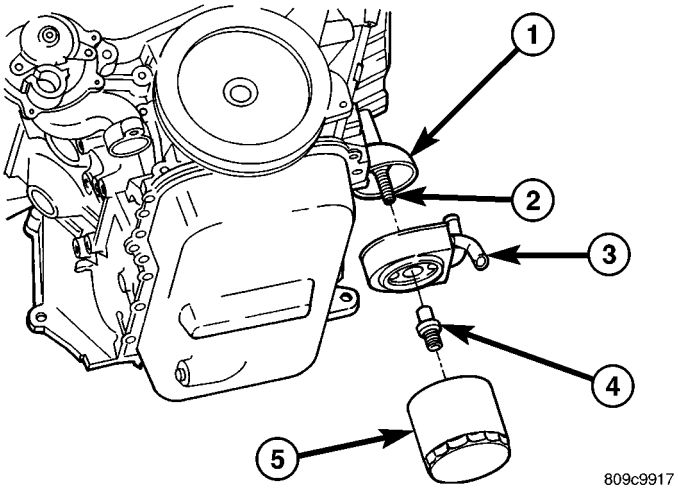

Fig. 99 Engine Oil Cooler - 3.3/3.8L (Heavy Duty Cooling)

1 - OIL FILTER ADAPTER
2 - CONNECTOR
3 - ENGINE OIL COOLER
4 - OIL COOLER ATTACHMENT FITTING
5 - OIL FILTER

(3) Install oil filter.

(4) Connect oil cooler inlet and outlet hoses (Fig. 98).

(5) Fill cooling system (Refer to 7 - COOLING - STANDARD PROCEDURE - COOLING SYSTEM FILLING).

OIL FILTER

REMOVAL

CAUTION: When servicing the oil filter avoid deforming the filter can by installing the remove/install tool band strap against the can-to-base lock seam. The lock seam joining the can to the base is reinforced by the base plate.

(1) Using suitable oil filter wrench, turn filter counterclockwise to remove from oil filter adapter (Fig. 100). Properly discard used oil filter.

INSTALLATION

(1) Wipe oil filter adapter base clean and inspect gasket contact surface.

(2) Lubricate gasket of new filter with clean engine oil.

(3) Install new filter until gasket contacts base (Fig. 100). Tighten filter 1 turn or 20 N·m (15 ft. lbs.). Use filter wrench if necessary.

(4) Start engine and check for leaks.

OIL FILTER ADAPTER

REMOVAL

(1) Raise vehicle on hoist.
(2) Remove the oil filter.
(3) Disconnect oil pressure switch electrical connector.
(4) Remove oil filter adapter attaching bolts (Fig. 100).
(5) Remove oil filter adapter and seal (Fig. 100).

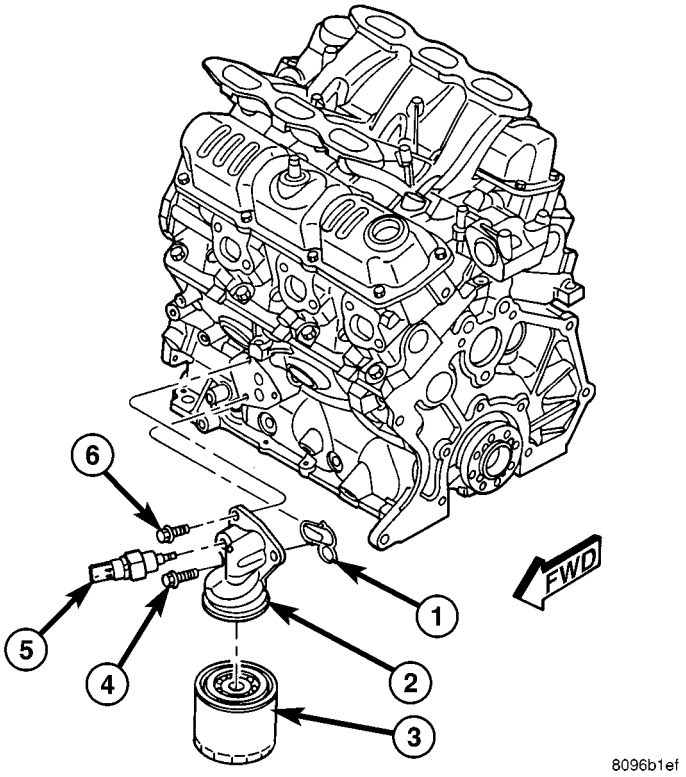

Fig. 100 OIL FILTER ADAPTER

1 - SEAL
2 - OIL FILTER ADAPTER
3 - OIL FILTER
4 - BOLT
5 - OIL PRESSURE SWITCH
6 - BOLT

INSTALLATION

(1) Clean oil filter adapter and install new seal.
(2) Position adapter on engine block and install bolts (Fig. 100).
(3) Tighten adapter bolts to 28 N·m (250 in. lbs.).
(4) Connect oil pressure switch electrical connector (Fig. 100).
(5) Install the oil filter.
(6) Lower vehicle on hoist.
(7) Start engine and allow to run approximately 2 minutes.
(8) Turn off engine and check oil level. Adjust oil level as necessary.

OIL PAN

REMOVAL

(1) Disconnect negative cable from battery and remove engine oil dipstick.
(2) Raise vehicle on hoist and drain engine oil.
(3) Remove drive belt splash shield.
(4) Remove strut to transaxle attaching bolt (Fig. 101). Loosen strut to engine block attaching bolts.
(5) Remove transaxle case cover (Fig. 101).

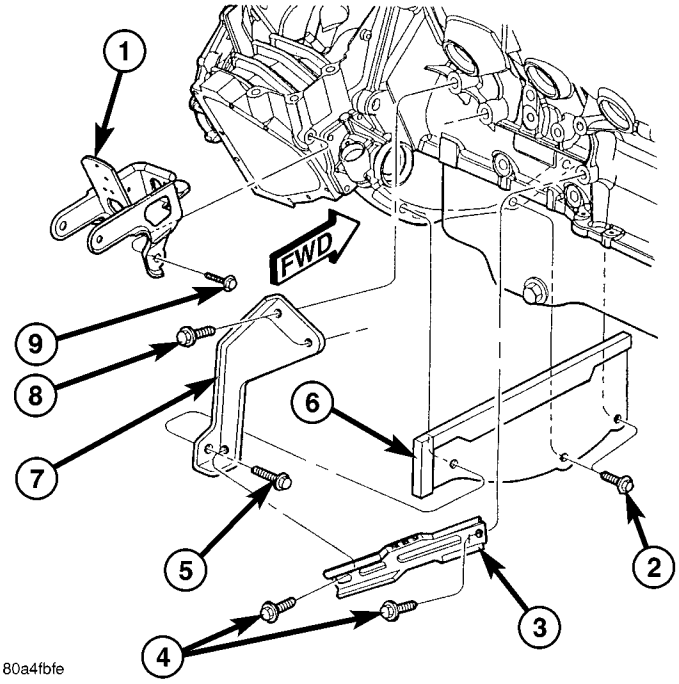

Fig. 101 Powertrain Struts and Transaxle Case Cover

1 - BRACKET - ENGINE REAR MOUNT
2 - BOLT - TRANSAXLE CASE COVER
3 - STRUT - TRANSAXLE TO ENGINE HORIZONTAL
4 - BOLT - HORIZONTAL STRUT
5 - BOLT - STRUT TO TRANSAXLE
6 - COVER - TRANSAXLE CASE LOWER
7 - STRUT - TRANSAXLE TO ENGINE
8 - BOLT - STRUT TO ENGINE
9 - BOLT - ENGINE REAR MOUNT BRACKET

(6) Remove oil pan fasteners (Fig. 102).
(7) Remove the oil pan and gasket (Fig. 102).

CLEANING

(1) Clean oil pan with solvent and wipe dry with a clean cloth.
(2) Clean all gasket material from mounting surfaces of pan and block.
(3) Clean oil screen and pick-up tube in clean solvent.

OIL PAN (Continued)

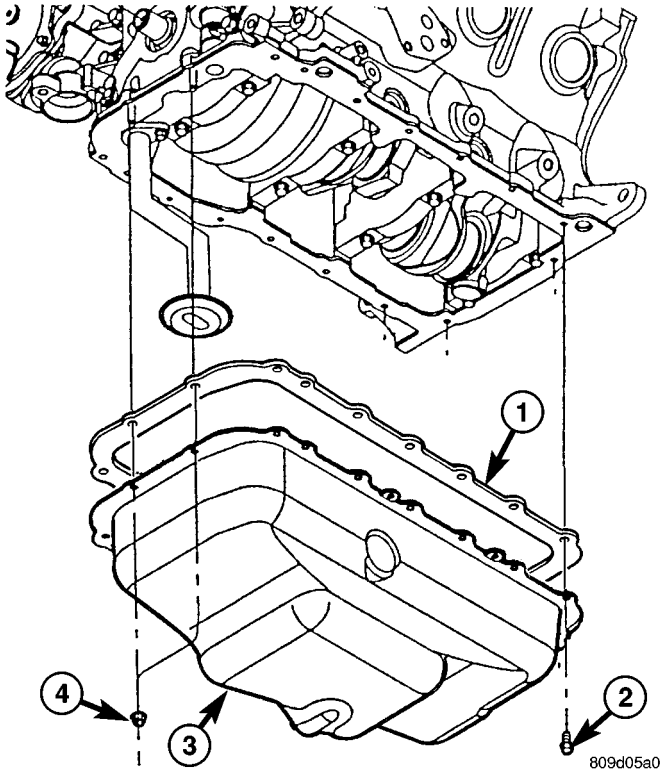

Fig. 102 OIL PAN

1 - GASKET
2 - BOLT
3 - OIL PAN
4 - NUT

INSPECTION

(1) Inspect oil drain plug and plug hole for stripped or damaged threads and repair as necessary. Install a new drain plug gasket. Tighten to 27 N·m (20 ft. lbs.).

(2) Inspect oil pan mounting flange for bends or distortion. Straighten flange if necessary.

(3) Inspect condition of oil screen and pick-up tube.

INSTALLATION

(1) Clean sealing surfaces and apply a 1/8 inch bead of Mopar® Engine RTV GEN II at the parting line of the chain case cover and the rear seal retainer (Fig. 103).

(2) Position a new pan gasket on oil pan (Fig. 102).

(3) Install oil pan and tighten fasteners to 12 N·m (105 in. lbs.) (Fig. 102).

(4) Install cover to transaxle case (Fig. 101).

(5) Install the strut bolt to transaxle housing (Fig. 101). Tighten all bending brace bolts.

(6) Install the drive belt splash shield.

(7) Lower vehicle and install oil dipstick.

(8) Connect negative cable to battery.

(9) Fill crankcase with oil to proper level.

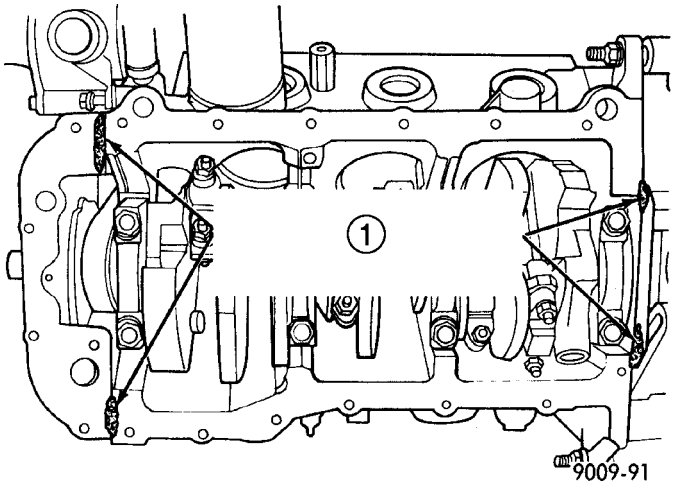

Fig. 103 Oil Pan Sealing

1 - SEALER LOCATIONS

OIL PRESSURE RELIEF VALVE

REMOVAL

(1) Remove oil pan (Refer to 9 - ENGINE/LUBRICATION/OIL PAN - REMOVAL).

(2) Drill a 3.175 mm (1/8 in.) hole in the center of the retainer cap (Fig. 104). Insert a self-threading sheet metal screw into the cap.

(3) Using suitable pliers, remove cap and discard.

(4) Remove spring and relief valve (Fig. 104).

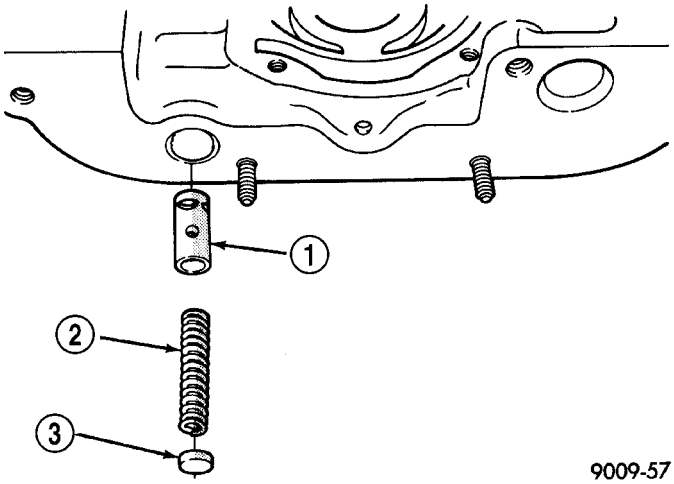

Fig. 104 Oil Pressure Relief Valve

1 - RELIEF VALVE
2 - SPRING
3 - RETAINER CAP

OIL PRESSURE RELIEF VALVE (Continued)

INSTALLATION

(1) Clean relief valve, spring and bore.

NOTE: Lubricate relief valve with clean engine oil before installing.

(2) Install relief valve and spring into housing.
(3) Install new retainer cap until flush with sealing surface.
(4) Install oil pan (Refer to 9 - ENGINE/LUBRICATION/OIL PAN - INSTALLATION).
(5) Fill crankcase with proper oil to correct level.

OIL PRESSURE SWITCH

DESCRIPTION

The engine oil pressure switch is located on the lower left front side of the engine. It screws into the oil filter adapter. The normally closed switch provides an input through a single wire to the low pressure indicator light on the instrument cluster.

OPERATION

The oil pressure switch provides a ground for the instrument cluster low oil pressure indicator light. The switch receives oil pressure input from the engine main oil gallery. When engine oil pressure is greater than 27.5 Kpa (4 psi), the switch contacts open, providing a open circuit to the low pressure indicator light. For wiring circuits and diagnostic information, (Refer to Appropriate Wiring/Diagnostic Information).

REMOVAL

(1) Raise vehicle on hoist.
(2) Disconnect electrical connector from switch.
(3) Remove oil pressure switch (Fig. 105).

INSTALLATION

(1) Install oil pressure switch. Torque oil pressure switch to 23 N·m (200 in. lbs.) (Fig. 105).
(2) Connect electrical connector to switch.
(3) Lower the vehicle.
(4) Start engine and check for leaks.
(5) Check engine oil level. Adjust as necessary.

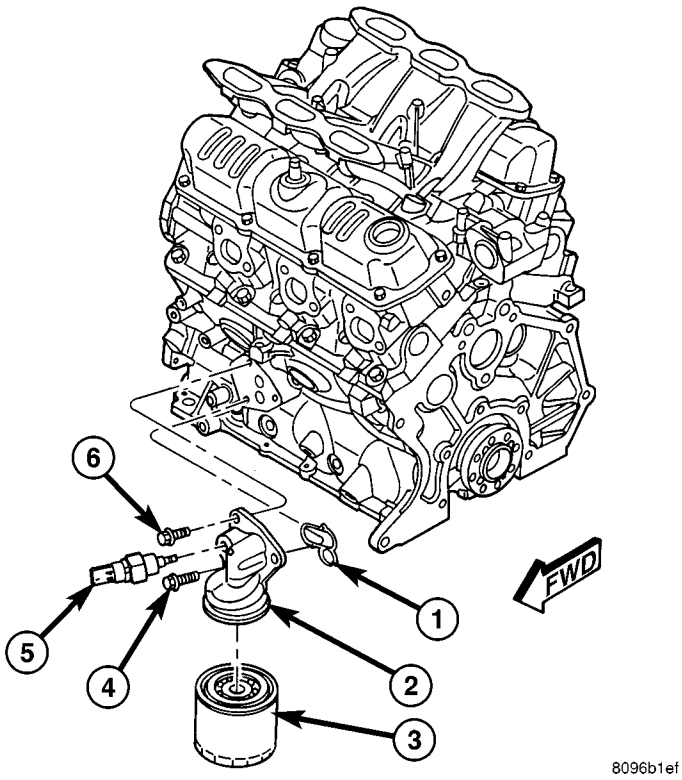

Fig. 105 OIL FILTER ADAPTER

1 - SEAL
2 - OIL FILTER ADAPTER
3 - OIL FILTER
4 - BOLT
5 - OIL PRESSURE SWITCH
6 - BOLT

OIL PUMP

DESCRIPTION

The oil pump is located in the timing chain cover. It is driven by the crankshaft.

REMOVAL

The oil pump is contained within the timing chain cover housing (Fig. 106).

(1) Remove oil pan. (Refer to 9 - ENGINE/LUBRICATION/OIL PAN - REMOVAL)

(2) Remove the timing chain cover. (Refer to 9 - ENGINE/VALVE TIMING/TIMING BELT / CHAIN COVER(S) - REMOVAL)

(3) Disassemble oil pump from timing chain cover. (Refer to 9 - ENGINE/LUBRICATION/OIL PUMP - DISASSEMBLY)

(4) Clean and Inspect oil pump components. (Refer to 9 - ENGINE/LUBRICATION/OIL PUMP - CLEANING) (Refer to 9 - ENGINE/LUBRICATION/OIL PUMP - INSPECTION)

OIL PUMP (Continued)

DISASSEMBLY

(1) Remove oil pump cover screws, and lift off cover (Fig. 106).

(2) Remove oil pump rotors (Fig. 106).

(3) Clean and inspect oil pump components. (Refer to 9 - ENGINE/LUBRICATION/OIL PUMP - CLEANING) (Refer to 9 - ENGINE/LUBRICATION/OIL PUMP - INSPECTION)

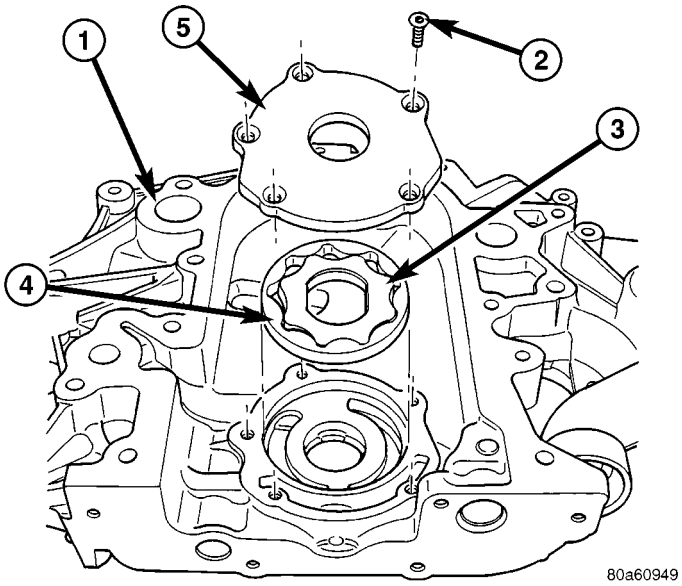

Fig. 106 OIL PUMP

1 - TIMING CHAIN COVER
2 - SCREWS
3 - INNER ROTOR
4 - OUTER ROTOR
5 - COVER

CLEANING

(1) Clean all parts thoroughly in a suitable solvent.

INSPECTION

(1) Inspect mating surface of the chain case cover. Surface should be smooth. Replace cover if scratched or grooved.

(2) Lay a straightedge across the pump cover surface (Fig. 107). If a 0.025 mm (0.001 in.) feeler gauge can be inserted between cover and straight edge, cover should be replaced.

(3) Measure thickness and diameter of outer rotor. If outer rotor thickness measures 7.64 mm (0.301 in.) or less (Fig. 108), or if the diameter is 79.95 mm (3.148 in.) or less, replace outer rotor.

(4) If inner rotor thickness measures 7.64 mm (0.301 in.) or less, replace inner rotor (Fig. 109).

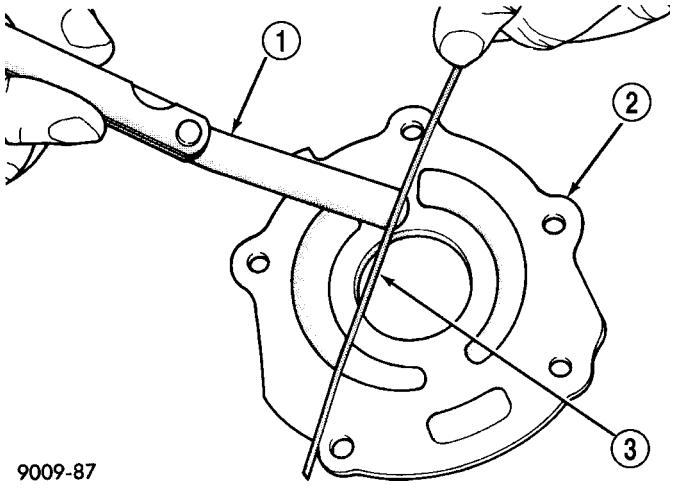

Fig. 107 Checking Oil Pump Cover Flatness

1 - FEELER GAUGE
2 - OIL PUMP COVER
3 - STRAIGHT EDGE

(5) Install outer rotor into chain case cover. Press rotor to one side with fingers and measure clearance between rotor and chain case cover (Fig. 110). If measurement is 0.39 mm (0.015 in.) or more, replace chain case cover, only if outer rotor is in specification.

(6) Install inner rotor into chain case cover. If clearance between inner and outer rotors (Fig. 111) is 0.203 mm (0.008 in.) or more, replace both rotors.

(7) Place a straightedge across the face of the chain case cover, between bolt holes. If a feeler gauge of 0.10 mm (0.004 in.) or more can be inserted between rotors and the straightedge, replace pump assembly (Fig. 112). **ONLY** if rotors are in specs.

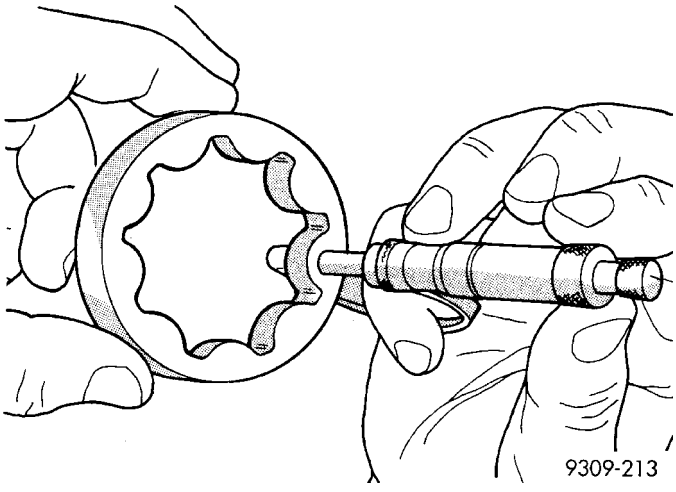

Fig. 108 Measuring Outer Rotor Thickness

OIL PUMP (Continued)

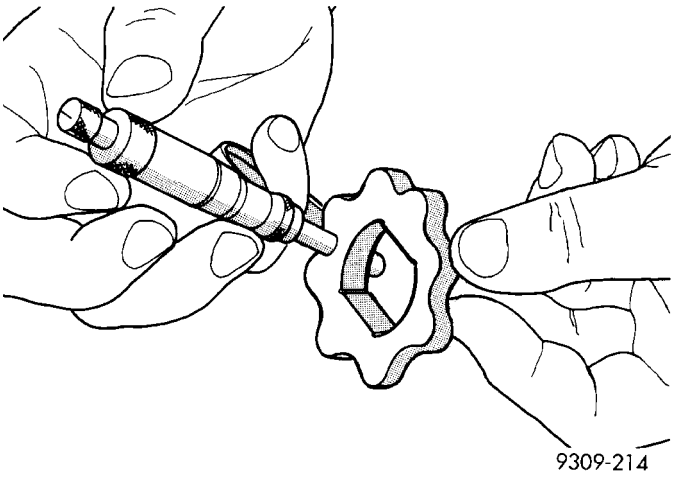

Fig. 109 Measuring Inner Rotor Thickness

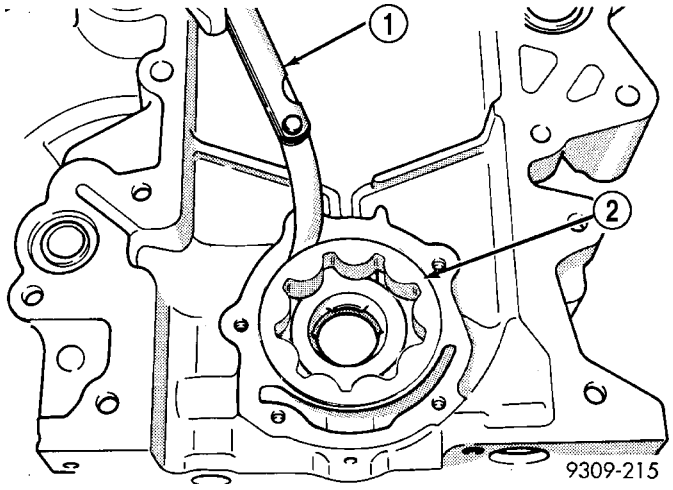

Fig. 110 Measuring Outer Rotor Clearance in Housing

1 - FEELER GAUGE
2 - OUTER ROTOR

(8) Remove oil pressure relief valve. (Refer to 9 - ENGINE/LUBRICATION/OIL PRESSURE RELIEF VALVE - REMOVAL)

(9) Inspect oil pressure relief valve and bore. Inspect for scoring, pitting and free valve operation in bore (Fig. 113). Small marks may be removed with 400-grit wet or dry sandpaper.

(10) The relief valve spring has a free length of approximately 49.5 mm (1.95 inches) it should test between 19.5 and 20.5 pounds when compressed to 34 mm (1-11/32 inches). Replace spring that fails to meet specifications.

(11) If oil pressure is low and pump is within specifications, inspect for worn engine bearings or other reasons for oil pressure loss.

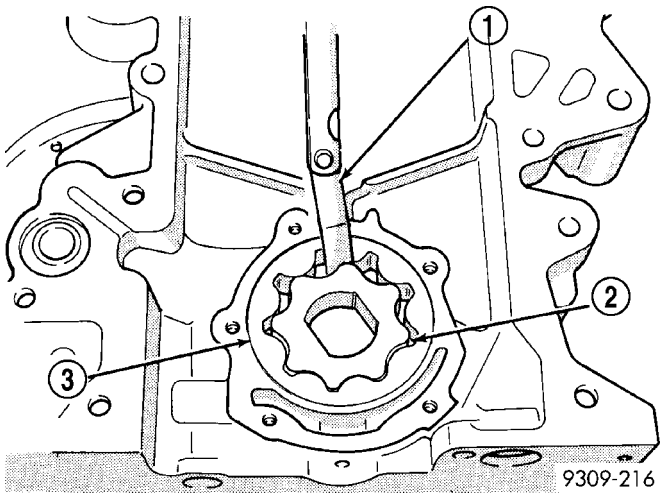

Fig. 111 Measuring Clearance Between Rotors

1 - FEELER GAUGE
2 - INNER ROTOR
3 - OUTER ROTOR

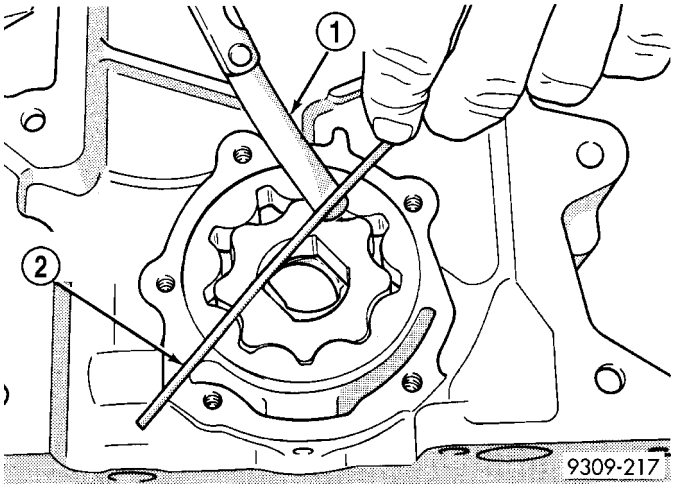

Fig. 112 Measuring Clearance Over Rotors

1 - FEELER GAUGE
2 - STRAIGHT EDGE

ASSEMBLY

(1) Assemble pump, using new parts as required. **Install the inner rotor with chamfer facing the cast iron oil pump cover.**

(2) Prime oil pump before installation by filling rotor cavity with engine oil.

(3) Install cover and tighten screws to 12 N·m (105 in. lbs.).

(4) If removed, install the oil pressure relief valve. (Refer to 9 - ENGINE/LUBRICATION/OIL PRESSURE RELIEF VALVE - INSTALLATION)

INSTALLATION

(1) Install oil pump. (Refer to 9 - ENGINE/LUBRICATION/OIL PUMP - ASSEMBLY)

OIL PUMP (Continued)

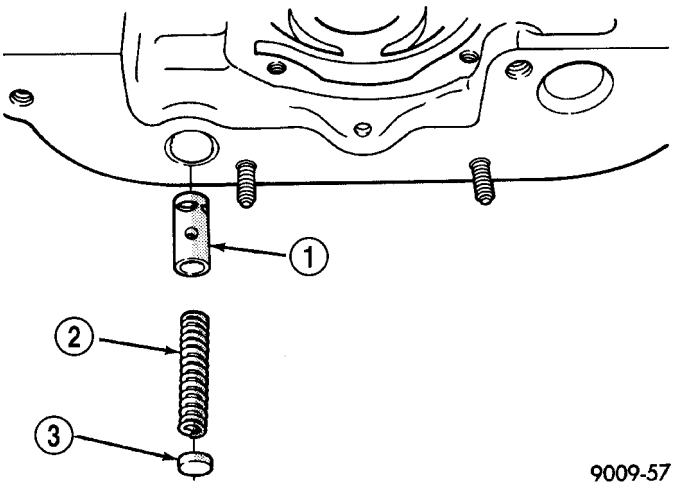

Fig. 113 Oil Pressure Relief Valve

1 - RELIEF VALVE
2 - SPRING
3 - RETAINER CAP

(2) Install timing chain cover (Refer to 9 - ENGINE/VALVE TIMING/TIMING BELT / CHAIN COVER(S) - INSTALLATION) and oil pan (Refer to 9 - ENGINE/VALVE TIMING/TIMING BELT / CHAIN COVER(S) - INSTALLATION).

INTAKE MANIFOLD

DESCRIPTION

The intake system is made up of an upper and lower intake manifold. The upper intake manifold is made of a composite for both the 3.3L engine and for the 3.8L engine (Fig. 118). The lower intake manifold is common between the two engines (Fig. 122). It also provides coolant crossover between cylinder heads and houses the coolant thermostat (Fig. 122).

The intake manifold utilizes a compact design with very low restriction and outstanding flow balance. This design allows the engine to perform with a wide torque curve while increasing higher rpm horsepower.

If, for some reason, the molded-in vacuum ports break, the composite manifold can be salvaged. The vacuum ports are designed to break at the shoulder, if overloaded. Additional material in the shoulder area provides sufficient stock to repair. For more information and procedure, (Refer to 9 - ENGINE/MANIFOLDS/INTAKE MANIFOLD - STANDARD PROCEDURE). Also, if the special screws that attach the MAP sensor, power steering reservoir, throttle cable bracket, and the EGR tube become stripped, an oversized screw is available to repair the stripped-out condition. For more information and procedure, (Refer to 9 - ENGINE/MANIFOLDS/INTAKE MANIFOLD - STANDARD PROCEDURE)

DIAGNOSIS AND TESTING - INTAKE MANIFOLD LEAKS

An intake manifold air leak is characterized by lower than normal manifold vacuum. Also, one or more cylinders may not be functioning.

WARNING: USE EXTREME CAUTION WHEN THE ENGINE IS OPERATING. DO NOT STAND IN A DIRECT LINE WITH THE FAN. DO NOT PUT YOUR HANDS NEAR THE PULLEYS, BELTS OR THE FAN. DO NOT WEAR LOOSE CLOTHING.

(1) Start the engine.
(2) Spray a small stream of water (Spray Bottle) at the suspected leak area.
(3) If engine RPM'S change, the area of the suspected leak has been found.
(4) Repair as required.

INTAKE MANIFOLD - UPPER

STANDARD PROCEDURE

STANDARD PROCEDURE - MANIFOLD STRIPPED THREAD REPAIR

The composite upper intake manifold thread bosses, if stripped out, can be repaired by utilizing a repair screw available through Mopar® parts. Repair screws are available for the following manifold attached components:

- MAP sensor
- Power steering reservoir
- EGR tube
- Throttle cable bracket

The repair screws require a unique tightening torque specification from the original screw. Refer to the following chart for specification.

DESCRIPTION	TORQUE*
STRIP-OUT REPAIR SCREWS ONLY	
MAP Sensor Repair Screw	4 N·m (35 in. lbs.)
Power Steering Reservoir Repair Screw	9 N·m (80 in. lbs.)
EGR Tube Attaching Repair Screw	9 N·m (80 in. lbs.)
Throttle Cable Bracket Repair Screw	9 N·m (80 in. lbs.)
*Install Slowly Using Hand Tools Only	

INTAKE MANIFOLD - UPPER (Continued)

STANDARD PROCEDURE - INTAKE MANIFOLD VACUUM PORT REPAIR

The composite intake manifold vacuum ports can be repaired. Although, if the manifold plenum chamber is damaged or cracked, the manifold must be replaced.

To repair a broken or damaged vacuum nipple (port) on the composite intake manifold, perform the following procedure:

PARTS REQUIRED	TOOLS REQUIRED
· Brass Nipple – 1/4″ O.D. x 1/8″ pipe thread (LDP/Speed Control Port)	· Pipe Tap – 1/8″ - 18 NPT · Drill Bit – 11/32″ · File/Sandpaper
· Brass Nipple – 1/2″ O.D. x 1/4″ pipe thread (Brake Booster Port)	· Pipe Tap – 1/4″ - 18 NPT · Drill Bit – 7/16″ · File/Sandpaper

NOTE: While performing this procedure, avoid getting the manifold material residue into the plenum chamber.

(1) File or sand the remaining port back until a flat surface is obtained (plane normal to nipple (port) axis).

(2) Drill out the nipple (port) base using a 7/16” (brake booster port) or 11/32” (LDP/speed control port) drill bit (Fig. 114).

(3) Using a 1/4”–18 NPT (brake booster port) or 1/8”–18 NPT (LDP/speed control port) pipe tap, cut internal threads (Fig. 114). Use caution to start tap in a axis same as original nipple.

(4) Apply Mopar® Thread Sealant to threads of repair nipple(s).

(5) Install repair nipple(s). Do not over torque repair nipple(s).

REMOVAL - UPPER INTAKE MANIFOLD

(1) Disconnect battery negative cable.

(2) Disconnect inlet air temperature (IAT) sensor electrical connector.

(3) Remove air inlet resonator to throttle body hose assembly.

(4) Disconnect throttle and speed control cables from throttle body (Refer to 14 - FUEL SYSTEM/ FUEL INJECTION/THROTTLE CONTROL CABLE - REMOVAL).

(5) Disconnect make-up air hose support clip from throttle cable bracket.

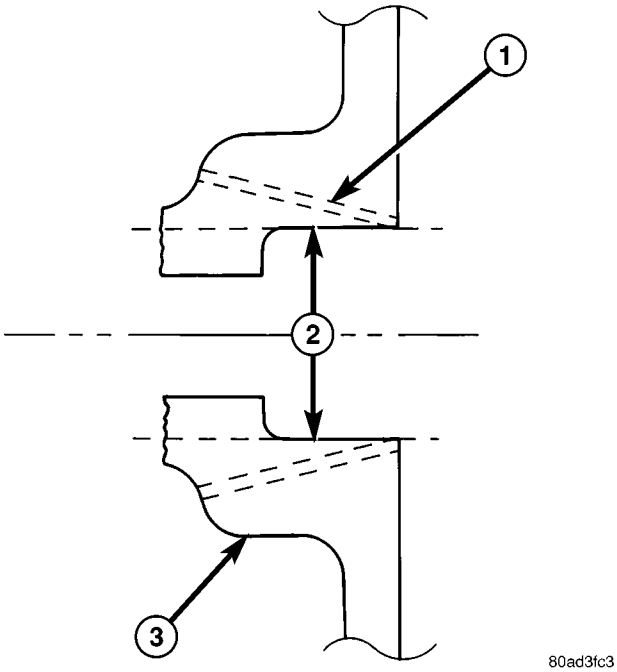

Fig. 114 Intake Manifold Port Repair

1 - BRAKE BOOSTER PORT = 1/4″–18 NPT PIPE TAP
1 - LDP/SPEED CONTROL PORT = 1/8″–18 NPT PIPE TAP
2 - DRILL BIT = 7/16″ BRAKE BOOSTER PORT
2 - DRILL BIT = 11/32″ LDP/SPEED CONTROL PORT
3 - INTAKE MANIFOLD

(6) Disconnect the automatic idle speed (AIS) motor and throttle position sensor (TPS) wiring connectors from throttle body.

(7) Disconnect the manifold absolute pressure (MAP) sensor electrical connector.

(8) Disconnect the vapor purge vacuum hose from throttle body.

(9) Disconnect the PCV hose (Fig. 115).

(10) Remove the power steering reservoir attaching bolts and only loosen the nut (Fig. 116). Lift reservoir up to disengage lower mount from stud. Set reservoir aside. **Do not** disconnect hose.

(11) Disconnect the brake booster and leak detection pump (LDP) hoses from intake manifold (Fig. 117).

(12) Remove intake manifold bolts and remove the manifold (Fig. 118).

(13) Cover the lower intake manifold with a suitable cover while the upper manifold is removed.

(14) Clean and inspect the upper intake manifold (Refer to 9 - ENGINE/MANIFOLDS/INTAKE MANIFOLD - CLEANING) and (Refer to 9 - ENGINE/ MANIFOLDS/INTAKE MANIFOLD - INSPECTION).

CLEANING

(1) Discard gasket(s).

(2) Clean all sealing surfaces.

INTAKE MANIFOLD - UPPER (Continued)

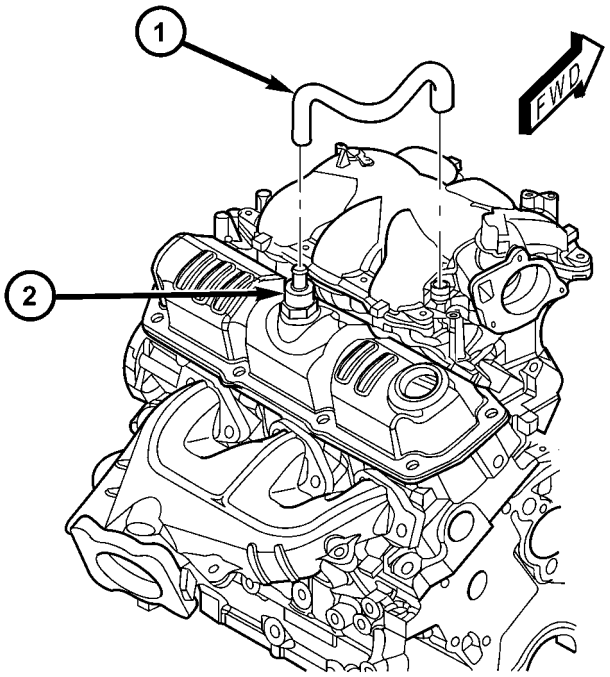

Fig. 115 PCV & HOSE

1 - HOSE - PCV
2 - PCV VALVE

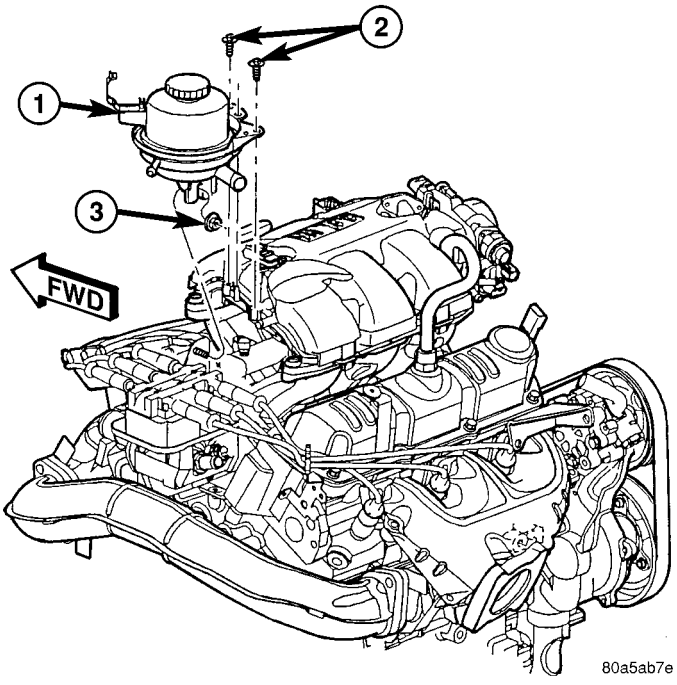

Fig. 116 POWER STEERING FLUID RESERVOIR

1 - POWER STEERING RESERVOIR
2 - BOLT - RESERVOIR TO MANIFOLD
3 - NUT - RESERVOIR TO COIL BRACKET

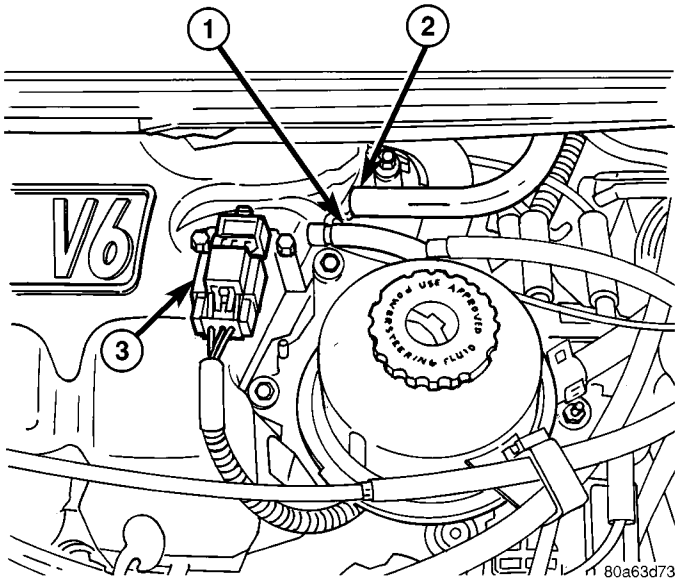

Fig. 117 BRAKE BOOSTER & LDP VACUUM HOSES

1 - LDP & SPEED CONTROL VACUUM HOSE
2 - BRAKE BOOSTER VACUUM HOSE
3 - MAP SENSOR

INSPECTION

Check manifold for:

- Damage and cracks.
- Mounting surface distortion by using a straight-edge and thickness gauge.

INSTALLATION - UPPER INTAKE MANIFOLD

(1) If the following components were removed from manifold, install and tighten to specifications:

CAUTION: The special screws used for the composite manifold attached components must be installed slowly using hand tools only. This requirement is to prevent the melting of material that causes stripped threads. If threads become stripped, an oversize repair screw is available. For more information and procedure (Refer to 9 - ENGINE/MANIFOLDS/INTAKE MANIFOLD - STANDARD PROCEDURE - MANIFOLD STRIPPED THREAD REPAIR).

- MAP sensor - 1.7 N·m (15 in. lbs.)
- Throttle cable bracket - 5.6 N·m (50 in. lbs.)

(2) Remove covering on lower intake manifold and clean surfaces.

(3) Inspect manifold gasket condition. Gaskets can be re-used, if not damaged. To replace, remove gasket from upper manifold (Fig. 118). Position new gasket in seal channel and press lightly in-place. Repeat procedure for each gasket position.

(4) Position upper manifold on lower manifold (Fig. 118). Apply Mopar® Lock & Seal Adhesive (Medium Strength Threadlocker) to each upper intake manifold bolt. Install and tighten bolts to 12 N·m (105 in. lbs.) following torque sequence in (Fig. 119).

INTAKE MANIFOLD - UPPER (Continued)

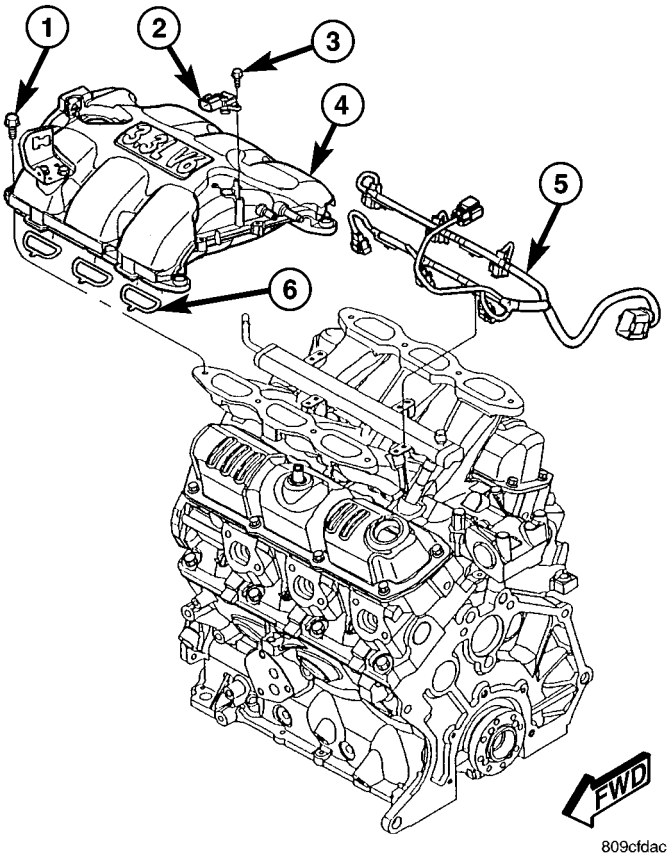

Fig. 118 INTAKE MANIFOLD - UPPER

1 - BOLT
2 - MAP SENSOR
3 - SCREW
4 - MANIFOLD - UPPER
5 - WIRE HARNESS
6 - GASKET (3 PER CYL. BANK)

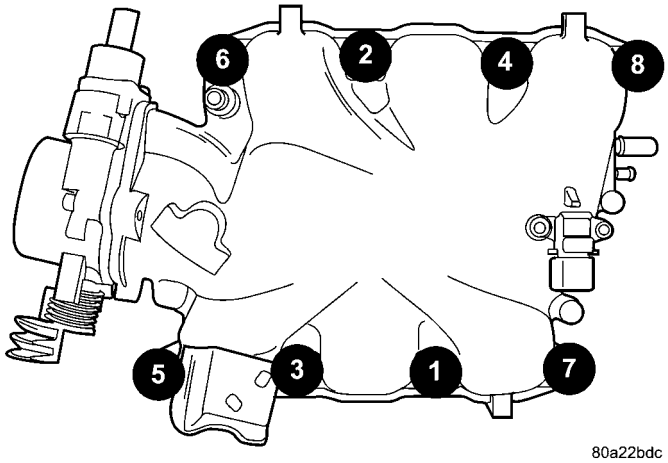

Fig. 119 UPPER MANIFOLD TIGHTENING SEQUENCE

(5) Connect the MAP sensor electrical connector.

(6) Connect the brake booster and LDP vacuum hose to intake manifold (Fig. 117).

CAUTION: The special screws used for attaching the EGR tube and power steering reservoir to the manifold must be installed slowly using hand tools only. This requirement is to prevent the melting of material that causes stripped threads. If threads become stripped, an oversize repair screw is available. For more information and procedure (Refer to 9 - ENGINE/MANIFOLDS/INTAKE MANIFOLD - STANDARD PROCEDURE - MANIFOLD STRIPPED THREAD REPAIR).

(7) Install the power steering reservoir (Fig. 116). Tighten screws to manifold to 5.6 N·m (50 in. lbs.).

(8) Connect throttle and speed control cables to throttle body (Refer to 14 - FUEL SYSTEM/FUEL INJECTION/THROTTLE CONTROL CABLE - INSTALLATION)

(9) Attach make up air hose clip into the hole in the throttle cable bracket.

(10) Connect the wiring connectors to the throttle position sensor (TPS) and Automatic Idle Speed (AIS) motor.

(11) Install air cleaner and air inlet hose assembly.

(12) Connect the inlet air temperature (IAT) sensor electrical connector.

(13) Connect battery negative cable.

INTAKE MANIFOLD - LOWER

REMOVAL - LOWER INTAKE MANIFOLD

(1) Perform fuel system pressure release procedure **(before attempting any repairs).** (Refer to 14 - FUEL SYSTEM/FUEL DELIVERY - STANDARD PROCEDURE)

(2) Drain the cooling system. (Refer to 7 - COOLING - STANDARD PROCEDURE)

(3) Remove the upper intake manifold. (Refer to 9 - ENGINE/MANIFOLDS/INTAKE MANIFOLD - REMOVAL)

(4) Remove the fuel line. (Refer to 14 - FUEL SYSTEM/FUEL DELIVERY/FUEL LINES - STANDARD PROCEDURE) (Refer to 14 - FUEL SYSTEM/FUEL DELIVERY/QUICK CONNECT FITTING - STANDARD PROCEDURE)

(5) Remove ignition coil and bracket (Fig. 120).

(6) Disconnect heater supply hose and engine coolant temperature sensor (Fig. 121).

(7) Disconnect the fuel injector wire harness.

(8) Remove the fuel injectors and rail assembly (Fig. 120).

(9) Remove radiator upper hose.

(10) Remove the intake manifold bolts.

(11) Remove lower intake manifold (Fig. 122).

INTAKE MANIFOLD - LOWER (Continued)

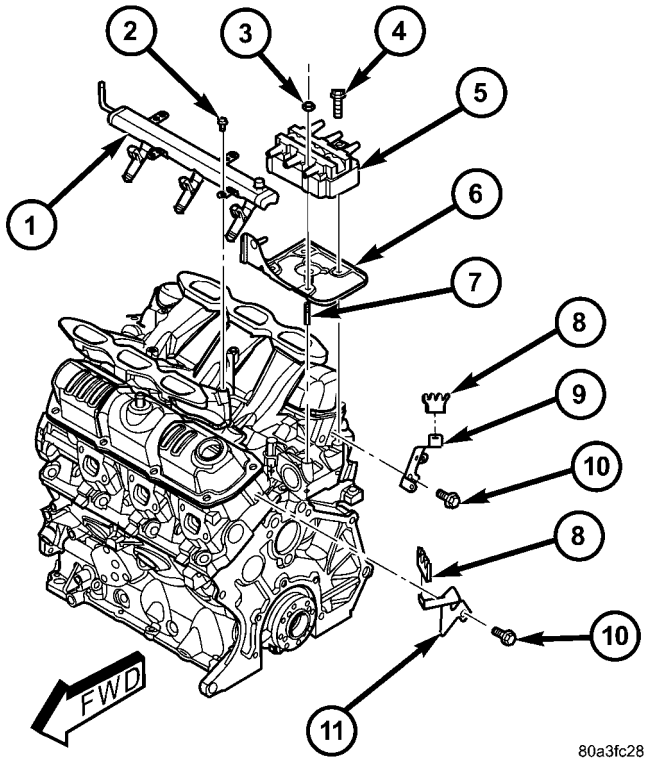

Fig. 120 FUEL RAIL AND IGNITION COIL & BRACKET

1 - FUEL RAIL
2 - BOLT - FUEL RAIL
3 - NUT - IGNITION COIL
4 - BOLT - IGNITION COIL
5 - IGNITION COIL
6 - BRACKET - IGNITION COIL
7 - STUD - IGNITION COIL
8 - SEPARATOR - SPARK PLUG CABLE
9 - BRACKET - SPARK PLUG CABLE SEPARATOR
10 - BOLT - SEPARATOR BRACKET
11 - BRACKET - SPARK PLUG CABLE SEPARATOR

WARNING: INTAKE MANIFOLD GASKET IS MADE OF VERY THIN METAL AND MAY CAUSE PERSONAL INJURY, HANDLE WITH CARE.

(12) Remove intake manifold seal retainers screws (Fig. 122). Remove intake manifold gasket.

(13) Inspect and clean manifold. (Refer to 9 - ENGINE/MANIFOLDS/INTAKE MANIFOLD - INSPECTION) (Refer to 9 - ENGINE/MANIFOLDS/ INTAKE MANIFOLD - CLEANING)

CLEANING

(1) Discard gasket(s).
(2) Clean all sealing surfaces.

INSPECTION

Check for:

- Damage and cracks of each section.
- Clogged water passages in end cross-overs (if equipped).

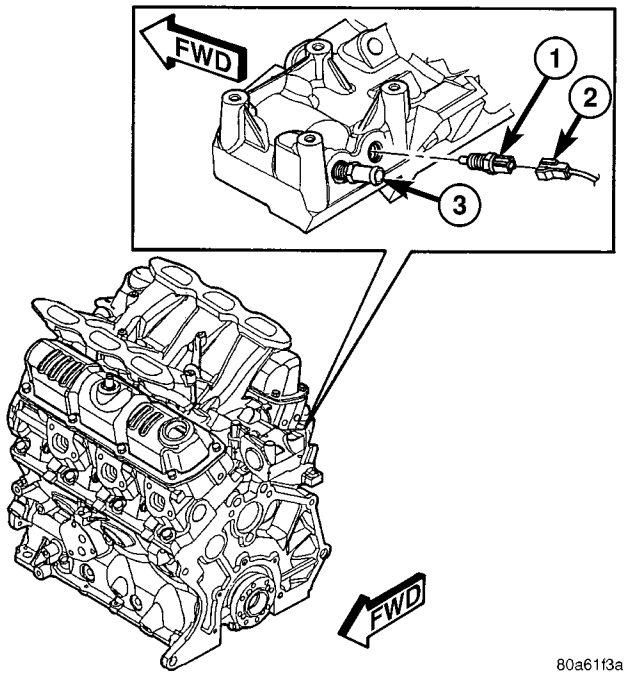

Fig. 121 ECT SENSOR & HEATER SUPPLY

1 - ENGINE COOLANT TEMPERATURE SENSOR
2 - CONNECTOR - ENGINE COOLANT SENSOR
3 - FITTING - HEATER SUPPLY

- Check for cylinder head mounting surface distortion using a straightedge and thickness gauge. (Refer to 9 - ENGINE/CYLINDER HEAD - INSPECTION)

INSTALLATION - LOWER INTAKE MANIFOLD

(1) Place a bead (approximately 1/4 in. diameter) of Mopar® Engine RTV GEN II onto each of the **four** manifold to cylinder head gasket corners (Fig. 123).

(2) Carefully install the new intake manifold gasket (Fig. 122). Tighten end seal retainer screws to 12 N·m (105 in. lbs.).

(3) Install lower intake manifold (Fig. 122). Install the bolts and torque to 1 N·m (10 in. lbs.). Then torque bolts to 22 N·m (200 in. lbs.) in sequence shown in (Fig. 124). Then torque again to 22 N·m (200 in. lbs.). After intake manifold is in place, **inspect to make sure seals are in place.**

(4) Install the fuel injectors and rail assembly. (Refer to 14 - FUEL SYSTEM/FUEL DELIVERY/ FUEL RAIL - INSTALLATION)

(5) Connect fuel injector electrical harness.

(6) Connect the engine coolant temperature sensor (Fig. 121).

(7) Connect the heater supply (Fig. 121) and radiator upper hoses to manifold.

(8) Connect the fuel line. (Refer to 14 - FUEL SYSTEM/FUEL DELIVERY/QUICK CONNECT FITTING - STANDARD PROCEDURE)

INTAKE MANIFOLD - LOWER (Continued)

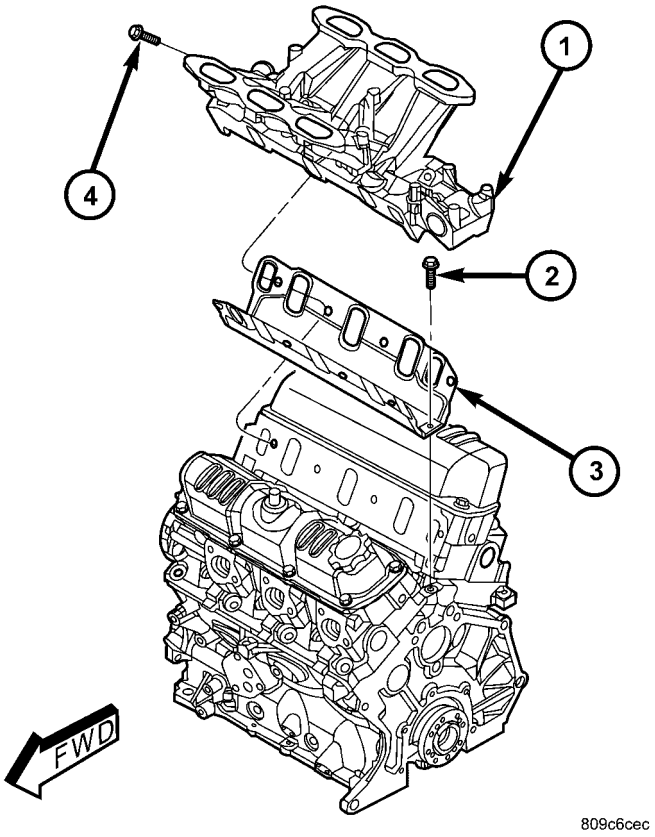

Fig. 122 INTAKE MANIFOLD - LOWER

1 - INTAKE MANIFOLD - LOWER
2 - BOLT - GASKET END SEAL RETAINER
3 - GASKET
4 - BOLT - LOWER INTAKE MANIFOLD

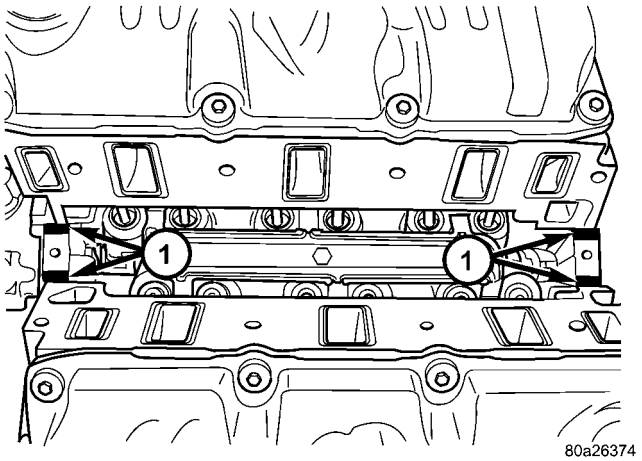

Fig. 123 Intake Manifold Gasket Sealing

1 - SEALER LOCATIONS

(9) Install the upper intake manifold. (Refer to 9 - ENGINE/MANIFOLDS/INTAKE MANIFOLD - INSTALLATION)

(10) Connect negative battery cable.

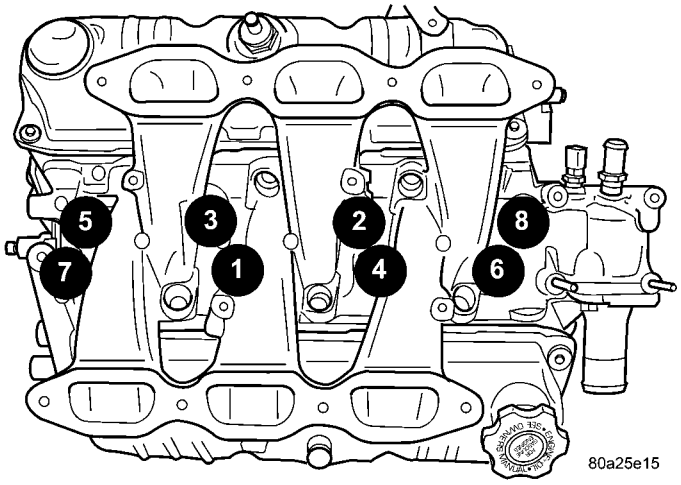

Fig. 124 LOWER MANIFOLD TIGHTENING SEQUENCE

(11) Fill the cooling system. (Refer to 7 - COOLING - STANDARD PROCEDURE)

EXHAUST MANIFOLD - RIGHT

REMOVAL

(1) Disconnect battery negative cable.

(2) Remove the wiper module. (Refer to 8 - ELECTRICAL/WIPERS/WASHERS/WIPER MODULE - REMOVAL)

(3) Disconnect spark plug wires.

(4) Remove bolts fastening crossover pipe to exhaust manifold (Fig. 125).

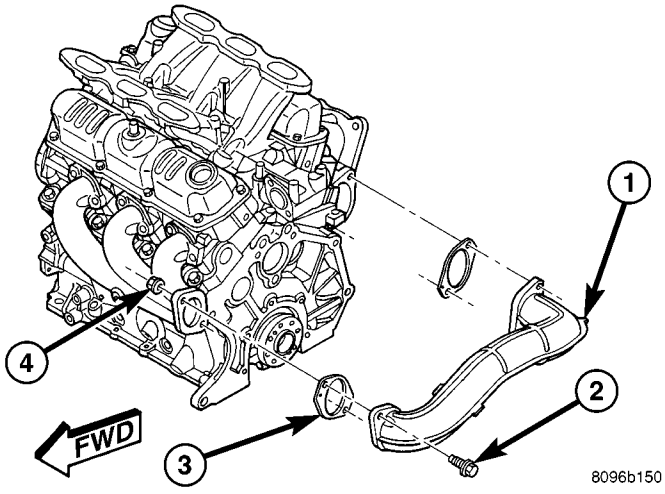

Fig. 125 CROSS-OVER PIPE

1 - CROSS-OVER PIPE
2 - BOLT
3 - GASKET
4 - FLAG NUT

(5) Disconnect and remove the upstream oxygen sensor (Fig. 128).

EXHAUST MANIFOLD - RIGHT (Continued)

(6) Remove the heat shield attaching screws (Fig. 128).

(7) Remove the upper heat shield (Fig. 128).

(8) Raise vehicle on hoist and remove drive belt shield.

(9) Loosen the power steering pump support strut lower bolt (Fig. 126).

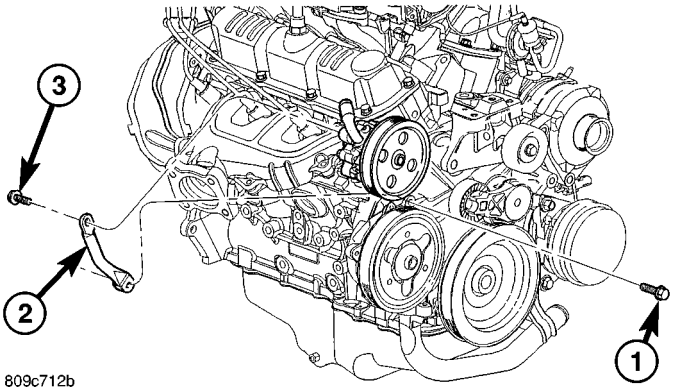

Fig. 126 P/S PUMP STRUT

1 - BOLT - LOWER
2 - STRUT - P/S PUMP
3 - BOLT - UPPER

(10) Disconnect downstream oxygen sensor connector.

(11) Disconnect catalytic converter pipe from exhaust manifold (Fig. 127).

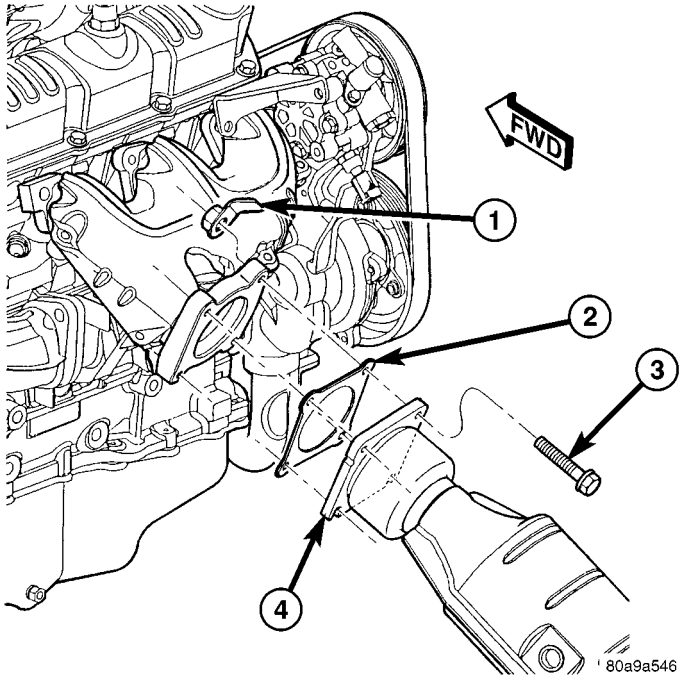

Fig. 127 Catalytic Converter to Exhaust Manifold

1 - FLAG NUT
2 - GASKET
3 - BOLT
4 - CATALYTIC CONVERTER

(12) Lower vehicle and remove the power steering pump support strut upper bolt (Fig. 126).

(13) Remove bolts attaching exhaust manifold to cylinder head and remove manifold (Fig. 128).

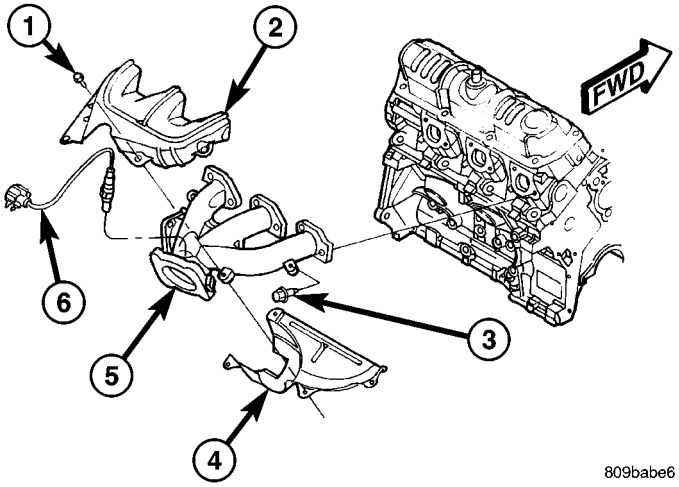

Fig. 128 EXHAUST MANIFOLD - RIGHT

1 - SCREW - HEAT SHIELD
2 - HEAT SHIELD - UPPER
3 - BOLT - EXHAUST MANIFOLD
4 - HEAT SHIELD - LOWER
5 - EXHAUST MANIFOLD - RIGHT
6 - OXYGEN SENSOR - UPSTREAM

(14) Inspect and clean manifold. (Refer to 9 - ENGINE/MANIFOLDS/EXHAUST MANIFOLD - CLEANING) (Refer to 9 - ENGINE/MANIFOLDS/ EXHAUST MANIFOLD - INSPECTION)

CLEANING

(1) Discard gasket (if equipped) and clean all surfaces of manifold and cylinder head.

INSPECTION

Inspect exhaust manifolds for damage or cracks and check distortion of the cylinder head mounting surface and exhaust crossover mounting surface with a straightedge and thickness gauge (Fig. 129).

Manifold surface flatness limits should not exceed 1.0 mm (0.039 in.).

INSTALLATION

(1) Position exhaust manifold on cylinder head and install bolts to center runner (cylinder #3) and initial tighten to 2.8 N·m (25 in. lbs.) (Fig. 128)

(2) Using a new gasket, attach crossover pipe to exhaust manifold and tighten bolts to 41 N·m (30 ft. lbs.) (Fig. 125).

EXHAUST MANIFOLD - RIGHT (Continued)

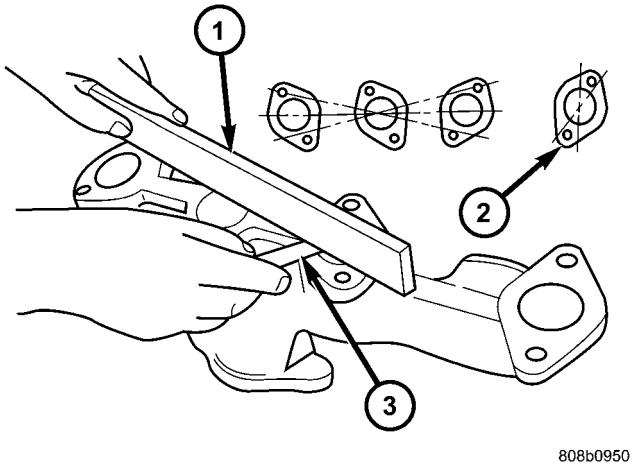

Fig. 129 Check Exhaust Manifold Mounting

1 - STRAIGHT EDGE
2 - CROSSOVER PIPE MOUNTING SURFACE
3 - FEELER GAUGE

NOTE: Inspect crossover pipe fasteners for damage from heat and corrosion. The cross-over bolts are made of a special stainless steel alloy. If replacement is required, OEM bolts are highly recommended.

(3) Install the remaining manifold attaching bolts. Tighten all bolts to 23 N·m (200 in. lbs.).

(4) Position the power steering pump support strut and install upper bolt (Fig. 126).

(5) Install heat shield and attaching screws (Fig. 128).

(6) Install and connect upstream oxygen sensor (Fig. 128).

(7) Raise the vehicle.

(8) Attach catalytic converter pipe to exhaust manifold using new gasket and tighten bolts to 37 N·m (27 ft. lbs.) (Fig. 127).

(9) Connect downstream oxygen sensor connector.

(10) Tighten the power steering pump support strut lower bolt (Fig. 126).

(11) Install the belt splash shield and lower the vehicle.

(12) Install the wiper module. (Refer to 8 - ELECTRICAL/WIPERS/WASHERS/WIPER MODULE - INSTALLATION)

(13) Connect battery negative cable.

EXHAUST MANIFOLD - LEFT

REMOVAL

(1) Disconnect battery negative cable.

(2) Remove bolts attaching crossover pipe to exhaust manifold (Fig. 130).

(3) Disconnect left cylinder bank spark plug wires.

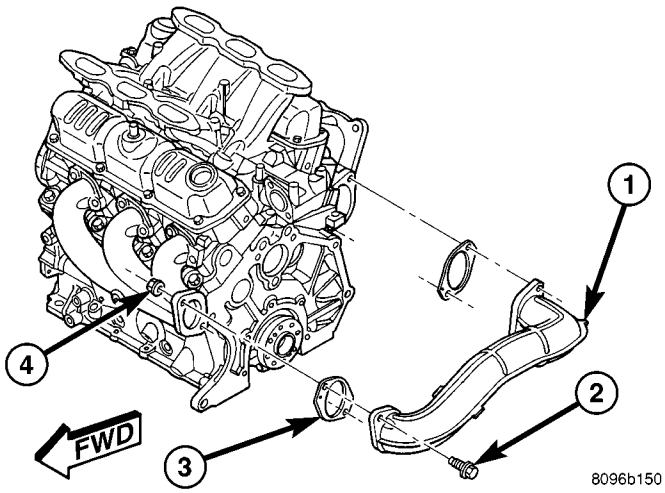

Fig. 130 CROSS-OVER PIPE

1 - CROSS-OVER PIPE
2 - BOLT
3 - GASKET
4 - FLAG NUT

(4) Remove heat shield attaching bolts (Fig. 131).

(5) Remove bolts attaching exhaust manifold to cylinder head (Fig. 131).

(6) Remove the exhaust manifold (Fig. 131).

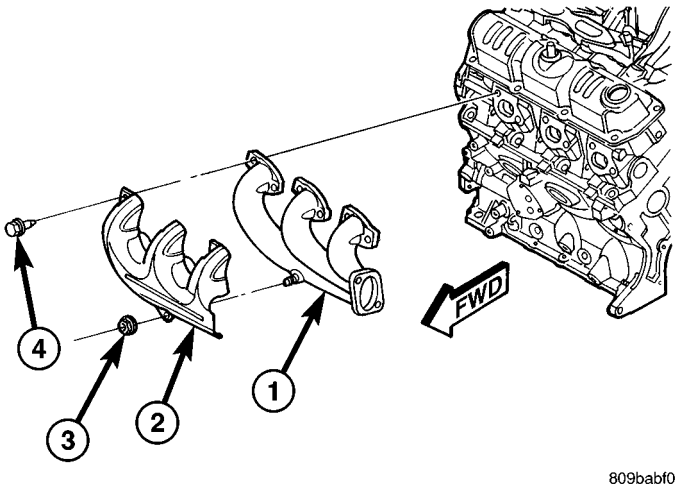

Fig. 131 EXHAUST MANIFOLD - LEFT

1 - EXHAUST MANIFOLD - LEFT BANK
2 - HEAT SHIELD
3 - NUT - HEAT SHIELD
4 - BOLT - EXHAUST MANIFOLD

(7) Inspect and clean manifold. (Refer to 9 - ENGINE/MANIFOLDS/EXHAUST MANIFOLD - INSPECTION) (Refer to 9 - ENGINE/MANIFOLDS/EXHAUST MANIFOLD - CLEANING)

CLEANING

(1) Discard gasket (if equipped) and clean all surfaces of manifold and cylinder head.

EXHAUST MANIFOLD - LEFT (Continued)

INSPECTION

Inspect exhaust manifolds for damage or cracks and check distortion of the cylinder head mounting surface and exhaust crossover mounting surface with a straightedge and thickness gauge (Fig. 132).

Manifold surface flatness limits should not exceed 1.0 mm (0.039 in.).

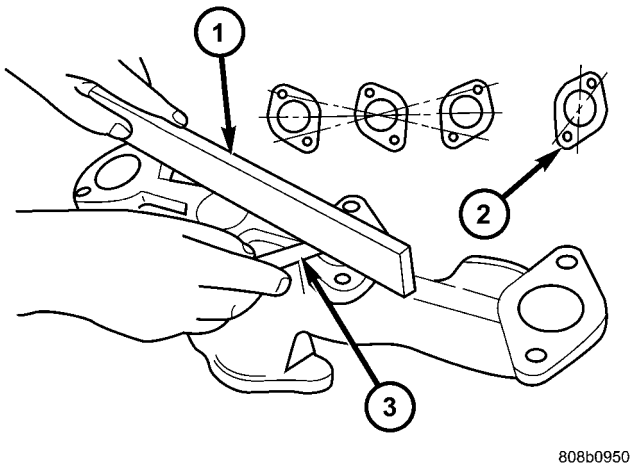

Fig. 132 Check Exhaust Manifold Mounting

1 - STRAIGHT EDGE
2 - CROSSOVER PIPE MOUNTING SURFACE
3 - FEELER GAUGE

INSTALLATION

(1) Position exhaust manifold on cylinder head (Fig. 131). Install bolts to center runner (cylinder #4) and initial tighten to 2.8 N·m (25 in. lbs.).

(2) Using a new gasket, attach crossover pipe to exhaust manifold and tighten bolts to 41 N·m (30 ft. lbs.) (Fig. 130).

NOTE: Inspect crossover pipe fasteners for damage from heat and corrosion. The cross-over bolts are made of a special stainless steel alloy. If replacement is required, OEM bolts are highly recommended.

(3) Position heat shield on manifold (Fig. 131).

(4) Install the remaining manifold attaching bolts. Tighten all bolts to 23 N·m (200 in. lbs.).

(5) Install and tighten heat shield attaching nut to 12 N·m (105 in. lbs.) (Fig. 131).

(6) Connect battery negative cable.

VALVE TIMING

STANDARD PROCEDURE

STANDARD PROCEDURE - VALVE TIMING VERIFICATION

(1) Remove front cylinder head cover and all 6 spark plugs.

(2) Rotate engine until the #2 piston is at TDC of the compression stroke.

(3) Install a degree wheel on the crankshaft pulley.

(4) With proper adaptor, install a dial indicator into #2 spark plug hole. Using the indicator find TDC on the compression stroke.

(5) Position the degree wheel to zero.

(6) Remove dial indicator from spark plug hole.

(7) Place a 5.08 mm (0.200 in.) spacer between the valve stem tip of #2 intake valve and rocker arm pad. Allow tappet to bleed down to give a solid tappet effect.

(8) Install a dial indicator so plunger contacts the #2 intake valve spring retainer as nearly perpendicular as possible. Zero the indicator.

(9) Rotate the engine clockwise until the intake valve has lifted .254 mm (0.010 in.).

CAUTION: Do not turn crankshaft any further clockwise as intake valve might bottom and result in serious damage.

(10) Degree wheel should read 6 degrees BTDC to 6 degrees ATDC.

STANDARD PROCEDURE - MEASURING TIMING CHAIN WEAR

NOTE: This procedure must be performed with the timing chain cover removed (Refer to 9 - ENGINE/ VALVE TIMING/TIMING CHAIN COVER - REMOVAL).

(1) Position a scale next to timing chain so that any movement of chain may be measured (Fig. 133).

(2) Position a torque wrench and socket on the camshaft sprocket attaching bolt. Apply force in the direction of crankshaft rotation to take up slack to the following torque:

- 41 N·m (30 ft. lb.) with cylinder heads installed
- 20 N·m (15 ft. lb.) with cylinder heads removed

NOTE: With torque applied to the camshaft sprocket bolt, crankshaft should not be permitted to move. It may be necessary to block crankshaft to prevent rotation.

(3) Holding a measuring scale along edge of chain links (Fig. 133).

VALVE TIMING (Continued)

(4) Apply force in the reverse direction to the following torque:

- 41 N·m (30 ft. lb.) with cylinder heads installed
- 20 N·m (15 ft. lb.) with cylinder heads removed

(5) Measure amount of sprocket/chain movement.

(6) Install a new timing chain and sprockets if movement exceeds 3.175 mm (1/8 in.).

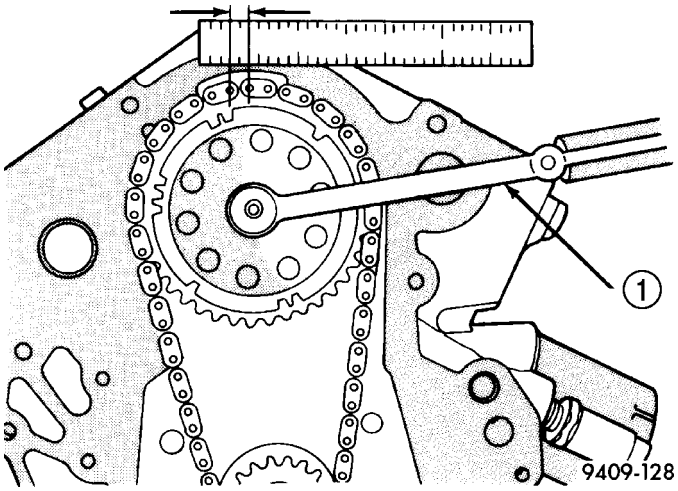

Fig. 133 Measuring Timing Chain Wear

1 - TORQUE WRENCH

TIMING CHAIN COVER

REMOVAL

(1) Disconnect negative cable from battery.

(2) Drain cooling system. (Refer to 7 - COOLING - STANDARD PROCEDURE)

(3) Raise vehicle on hoist.

(4) Drain engine oil.

(5) Remove right wheel and inner splash shield.

(6) Remove oil pan. (Refer to 9 - ENGINE/LUBRICATION/OIL PAN - REMOVAL)

(7) Remove oil pick-up tube (Fig. 134).

(8) Remove accessory drive belt. (Refer to 7 - COOLING/ACCESSORY DRIVE/DRIVE BELTS - REMOVAL)

(9) Remove A/C compressor and set aside.

(10) Remove crankshaft vibration damper. (Refer to 9 - ENGINE/ENGINE BLOCK/VIBRATION DAMPER - REMOVAL)

(11) Remove radiator lower hose.

(12) Remove heater hose from timing chain cover housing (Fig. 135) or water pump inlet tube (if engine oil cooler equipped) (Fig. 136).

(13) Remove the right side engine mount. (Refer to 9 - ENGINE/ENGINE MOUNTING/RIGHT MOUNT - REMOVAL)

(14) Remove idler pulley from engine bracket (Fig. 137).

(15) Remove the engine mount bracket (Fig. 137).

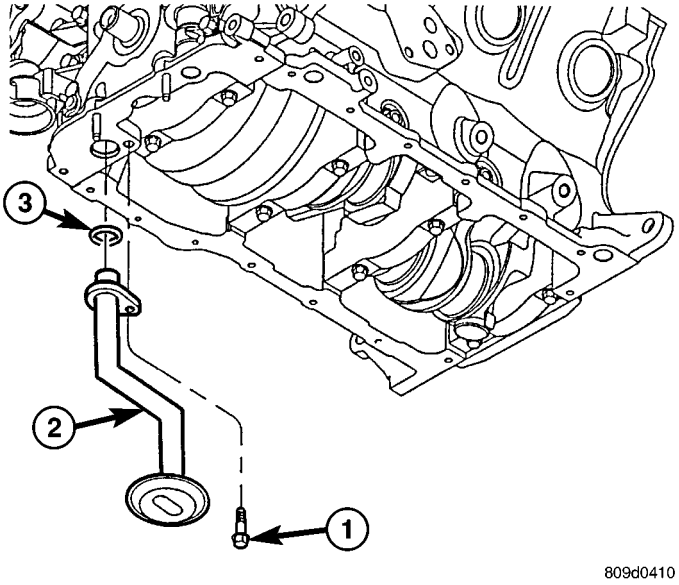

Fig. 134 OIL PICKUP TUBE

1 - BOLT
2 - OIL PICK-UP TUBE
3 - O-RING

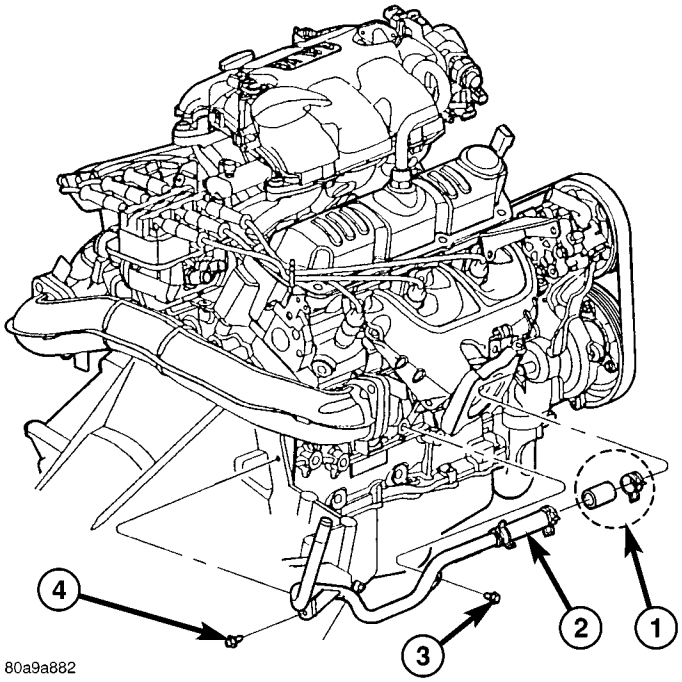

Fig. 135 HEATER RETURN HOSE (Without Engine Oil Cooler)

1 - CAP AND CLAMP (OIL COOLER EQUIPPED ONLY)
2 - HOSE ASSEMBLY - HEATER RETURN
3 - BOLT - HEATER TUBE ATTACHING
4 - BOLT - HEATER TUBE ATTACHING

(16) Remove camshaft position sensor from timing chain cover (Fig. 137).

TIMING CHAIN COVER (Continued)

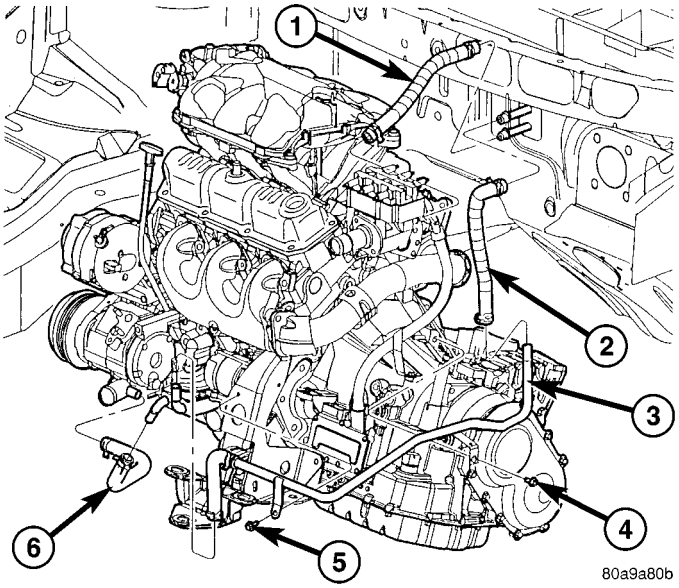

Fig. 136 HEATER HOSES 3.3/3.8L (With Engine Oil Cooler)

1 - HOSE - HEATER SUPPLY
2 - HOSE - HEATER RETURN
3 - TUBE ASSEMBLY - HEATER RETURN
4 - BOLT - TUBE ASSEMBLY
5 - BOLT - TUBE ASSEMBLY
6 - HOSE - HEATER RETURN/OIL COOLER OUTLET

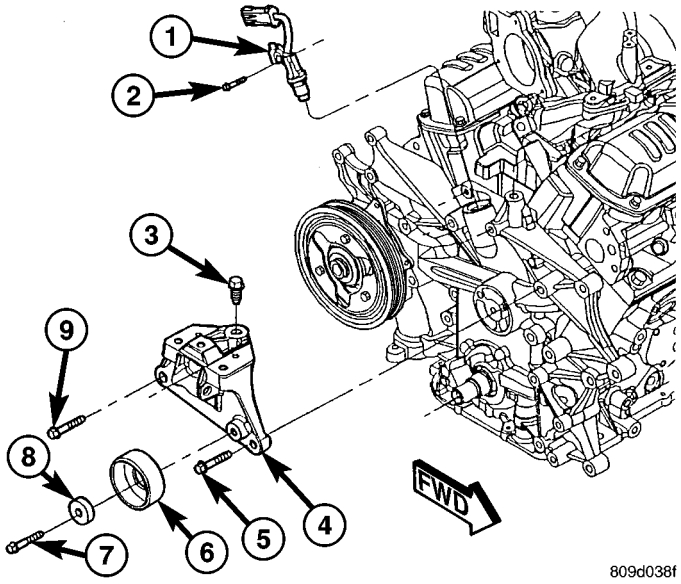

Fig. 137 Engine Mount Bracket

1 - CAMSHAFT SENSOR
2 - BOLT - CAMSHAFT SENSOR
3 - BOLT - MOUNT BRACKET (VERTICAL)
4 - BRACKET - ENGINE MOUNT
5 - BOLT - MOUNT BRACKET (HORIZONTAL)
6 - PULLEY - IDLER
7 - BOLT - IDLER PULLEY
8 - SPACER - IDLER PULLEY BOLT
9 - BOLT - MOUNT BRACKET (HORIZONTAL)

(17) Remove the water pump for cover removal clearance. (Refer to 7 - COOLING/ENGINE/WATER PUMP - REMOVAL)

(18) Remove the bolt attaching the power steering pump support strut to the front cover (Fig. 138).

(19) Remove the timing chain cover fasteners. Remove timing chain cover (Fig. 139).

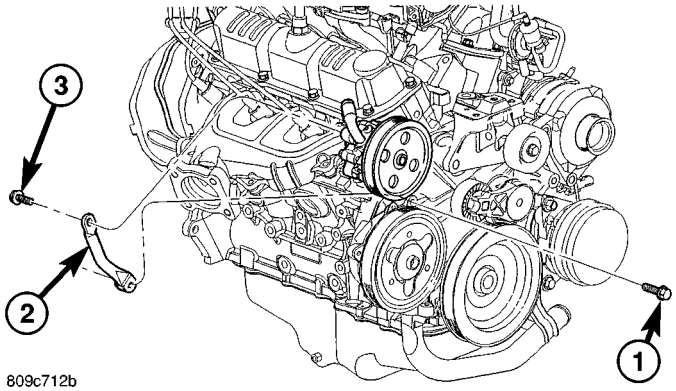

Fig. 138 Power Steering Pump Strut

1 - BOLT - LOWER
2 - STRUT - P/S PUMP
3 - BOLT - UPPER

INSTALLATION

(1) Be sure mating surfaces of chain case cover and cylinder block are clean and free from burrs. Crankshaft oil seal must be removed to insure correct oil pump engagement.

NOTE: DO NOT USE SEALER ON COVER GASKET

(2) Position new gasket on timing cover (Fig. 139). Adhere new gasket to chain case cover, making sure that the lower edge of the gasket is flush to 0.5 mm (0.020 in.) passed the lower edge of the cover.

(3) Rotate crankshaft so that the oil pump drive flats are in the vertical position.

(4) Position oil pump inner rotor so the mating flats are in the same position as the crankshaft drive flats (Fig. 139).

CAUTION: Make sure the oil pump is engaged on the crankshaft correctly or severe damage may result.

(5) Install timing cover (Fig. 139).

(6) Install timing chain cover bolts. Tighten M8 bolts to 27 N·m (20 ft. lbs.) and M10 bolts to 54 N·m (40 ft. lbs.) (Fig. 140).

(7) Install crankshaft front oil seal. (Refer to 9 - ENGINE/ENGINE BLOCK/CRANKSHAFT OIL SEAL - FRONT - INSTALLATION)

(8) Install water pump and pulley. (Refer to 7 - COOLING/ENGINE/WATER PUMP - INSTALLATION)

TIMING CHAIN COVER (Continued)

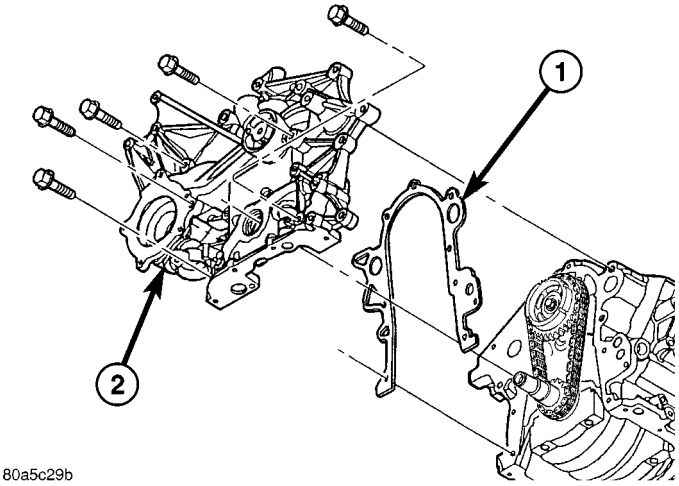

Fig. 139 Timing Chain Cover and Gasket

1 - GASKET
2 - TIMING CHAIN COVER

(9) Install crankshaft vibration damper. (Refer to 9 - ENGINE/ENGINE BLOCK/VIBRATION DAMPER - INSTALLATION)

(10) Install engine mount bracket (Fig. 137) and tighten M10 to 54 N·m (40 ft. lbs.), M8 bolt to 28 N·m (21 ft. lb. lbs.).

(11) Install idler pulley on engine mount bracket (Fig. 137).

(12) Install right side engine mount. (Refer to 9 - ENGINE/ENGINE MOUNTING/RIGHT MOUNT - INSTALLATION)

(13) Install camshaft position sensor (Refer to 8 - ELECTRICAL/IGNITION CONTROL/CAMSHAFT POSITION SENSOR - INSTALLATION).

(14) Connect the heater return hose at rear of timing chain cover (Fig. 135) or at water pump inlet tube (if engine oil cooler equipped) (Fig. 136).

(15) Connect the radiator lower hose.

(16) Install A/C compressor.

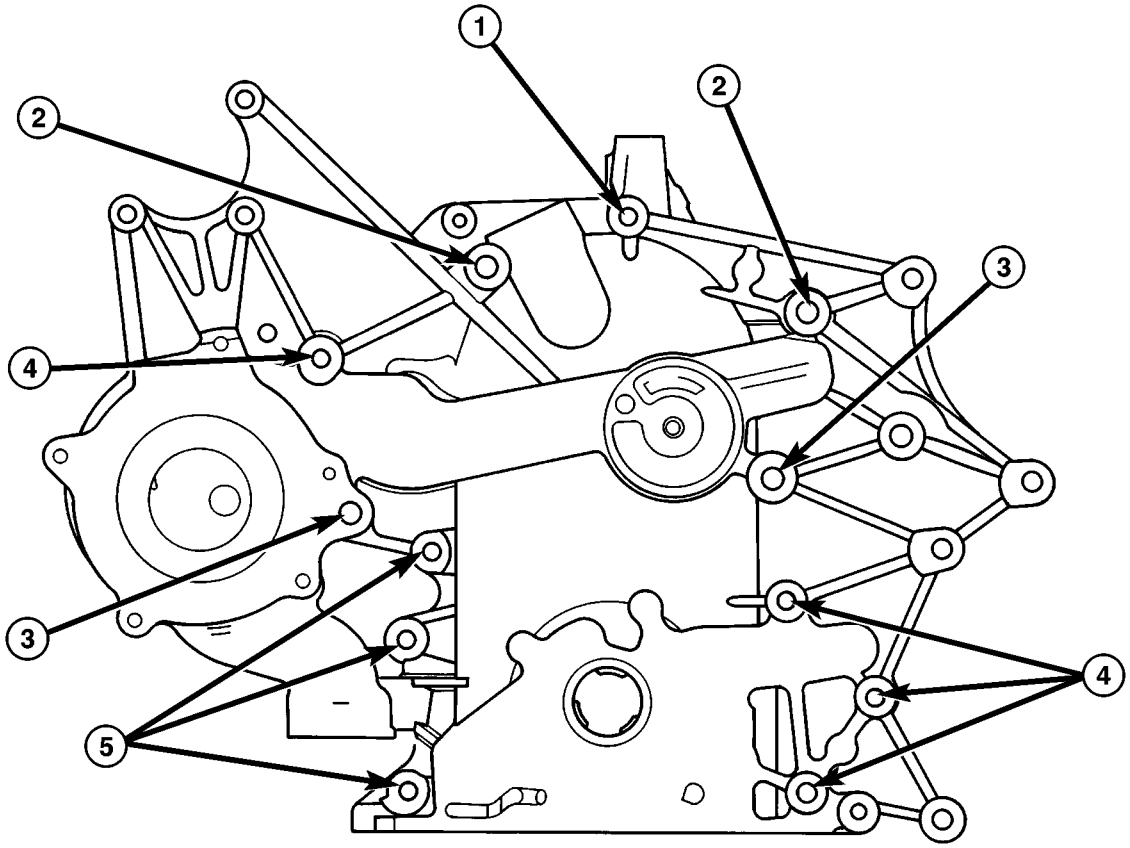

Fig. 140 TIMING CHAIN COVER BOLT LOCATIONS

1 - BOLT - M8 x 1.25 x 95
2 - BOLT - M10 x 1.5 x 100
3 - BOLT - M10 x 1.5 x 85
4 - BOLT - M8 x 1.25 x 80
5 - BOLT - M8 x 1.25 x 45

TIMING CHAIN COVER (Continued)

(17) Install accessory drive belt. (Refer to 7 - COOLING/ACCESSORY DRIVE/DRIVE BELTS - INSTALLATION)

(18) Install oil pump pick-up tube with new O-ring. Tighten attaching bolt to 28 N·m (250 in. lbs.).

(19) Install oil pan. (Refer to 9 - ENGINE/LUBRICATION/OIL PAN - INSTALLATION)

(20) Install inner splash shield and right front wheel.

(21) Fill crankcase with engine oil to proper level.

(22) Fill cooling system. (Refer to 7 - COOLING - STANDARD PROCEDURE)

(23) Connect negative cable to battery.

TIMING CHAIN AND SPROCKETS

REMOVAL

REMOVAL - TIMING CHAIN AND CAMSHAFT SPROCKET

(1) Disconnect negative cable from battery.

(2) Remove the timing chain cover. (Refer to 9 - ENGINE/VALVE TIMING/TIMING BELT / CHAIN COVER(S) - REMOVAL)

(3) Rotate engine by turning crankshaft until the timing marks are aligned as shown in (Fig. 141).

(4) Remove camshaft sprocket attaching bolt.

(5) Remove the timing chain with camshaft sprocket.

(6) Remove the crankshaft sprocket. (Refer to 9 - ENGINE/VALVE TIMING/TIMING BELT/CHAIN AND SPROCKETS - REMOVAL)

REMOVAL - CRANKSHAFT SPROCKET

(1) Remove the timing chain. (Refer to 9 - ENGINE/VALVE TIMING/TIMING BELT/CHAIN AND SPROCKETS - REMOVAL)

(2) Using Special Tools 8539, 5048-6, and 5048-1, remove the crankshaft sprocket while holding the crankshaft from turning (Fig. 142). Be careful not to damage the crankshaft surfaces.

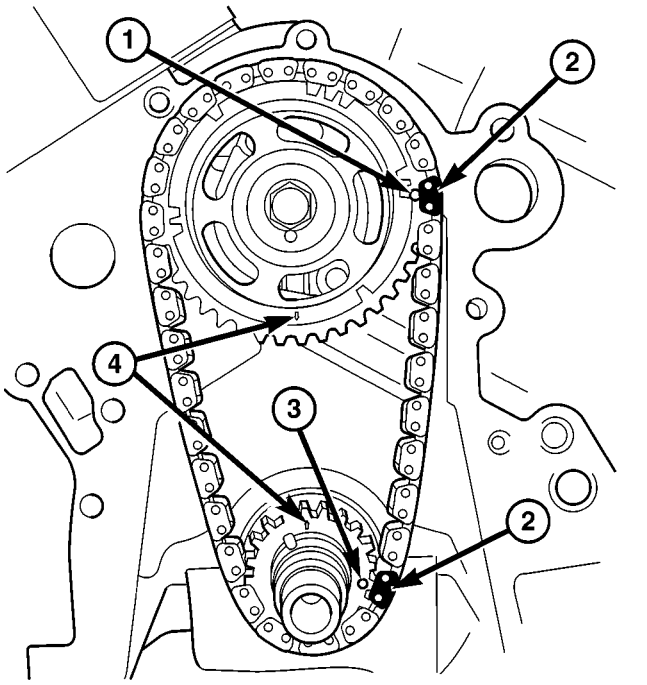

80a2ca28

Fig. 141 Timing Mark Alignment

1 - CAMSHAFT SPROCKET TIMING MARK (DOT)
2 - PLATED LINK
3 - CRANKSHAFT SPROCKET TIMING MARK (DOT)
4 - ARROWS

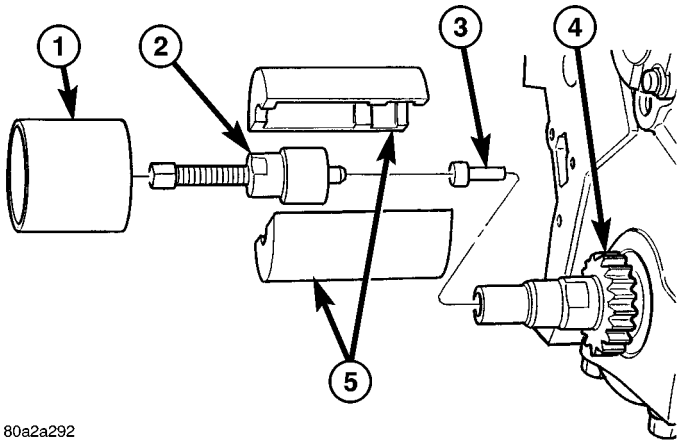

80a2a292

Fig. 142 CRANKSHAFT SPROCKET - REMOVAL

1 - SPECIAL TOOL 5048-6
2 - SPECIAL TOOL 5048-1
3 - SPECIAL TOOL 8450
4 - CRANKSHAFT SPROCKET
5 - SPECIAL TOOL 8539

INSTALLATION

INSTALLATION - CRANKSHAFT SPROCKET

(1) Position the sprocket on the crankshaft (timing mark out) with the timing slot aligned with the timing pin.

(2) Install sprocket using Special Tool 8452 (Fig. 143). Install sprocket until it is fully seats on the crankshaft.

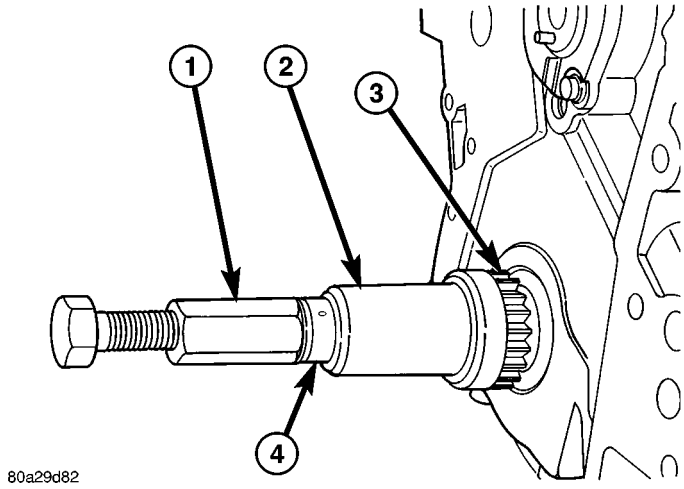

Fig. 143 CRANKSHAFT SPROCKET - INSTALLATION

1 - SPECIAL TOOL 8452-3
2 - SPECIAL TOOL 8452-1
3 - CRANKSHAFT SPROCKET
4 - THRUST BEARING / WASHER

(3) Install the timing chain and camshaft sprocket. (Refer to 9 - ENGINE/VALVE TIMING/TIMING BELT/CHAIN AND SPROCKETS - INSTALLATION)

INSTALLATION - TIMING CHAIN AND CAMSHAFT SPROCKET

(1) Rotate crankshaft so the timing arrow is to the 12 o'clock position (Fig. 141).

NOTE: Lubricate timing chain and sprockets with clean engine oil before installation.

(2) While holding camshaft sprocket and chain in hand, place timing chain around the sprocket, aligning the plated link with the dot on the sprocket. Position the timing arrow to the 6 o'clock position (Fig. 141).

(3) Place timing chain around crankshaft sprocket with the plated link lined up with the dot on the sprocket. Install camshaft sprocket into position.

(4) Use a straight edge to check alignment of timing marks.

(5) Install camshaft sprocket bolt and washer. Tighten bolt to 54 N·m (40 ft. lbs.).

(6) Rotate crankshaft 2 revolutions and check timing mark alignment (Fig. 141). If timing marks do not line up, remove camshaft sprocket and realign.

(7) Install the timing chain cover. (Refer to 9 - ENGINE/VALVE TIMING/TIMING BELT / CHAIN COVER(S) - INSTALLATION)

(8) Connect negative cable to battery.

EXHAUST SYSTEM

TABLE OF CONTENTS

page

EXHAUST SYSTEM
DESCRIPTION 1
DIAGNOSIS AND TESTING
DIAGNOSIS AND TESTING - EXCESSIVE EXHAUST SYSTEM NOISE 2
DIAGNOSIS AND TESTING - EXHAUST SYSTEM RESTRICTION CHECK 2
INSPECTION 3
ADJUSTMENTS 3
SPECIFICATIONS
TORQUE 3
SPECIAL TOOLS
EXHAUST SYSTEM 4
CATALYTIC CONVERTER
DESCRIPTION 4
OPERATION 4
REMOVAL 5
INSPECTION 6
INSTALLATION 6
CROSS-OVER PIPE - 3.3/3.8L
REMOVAL 6
INSTALLATION 6
HEAT SHIELDS
DESCRIPTION 7
OPERATION 7
REMOVAL 7
INSTALLATION 7
MUFFLER
REMOVAL 7
INSTALLATION 8
RESONATOR
REMOVAL 9
INSTALLATION 9

EXHAUST SYSTEM

DESCRIPTION

The exhaust system consists of a catalytic converter, muffler, and a resonator with connecting pipes in-between (Fig. 1). The system is serviced in two sections; the catalytic converter and pipe, and the muffler and resonator with connecting pipe. A band clamp is used to connect the joint between the two components. Three support hanger rods with rubber isolators are used to support and isolate the exhaust system. A flexible joint, integral to the catalytic converter, allows for engine movement. On vehicles equipped with AWD, an additional heat shield is mounted to the catalytic converter. The exhaust system is tuned for each vehicle/powertrain combination.

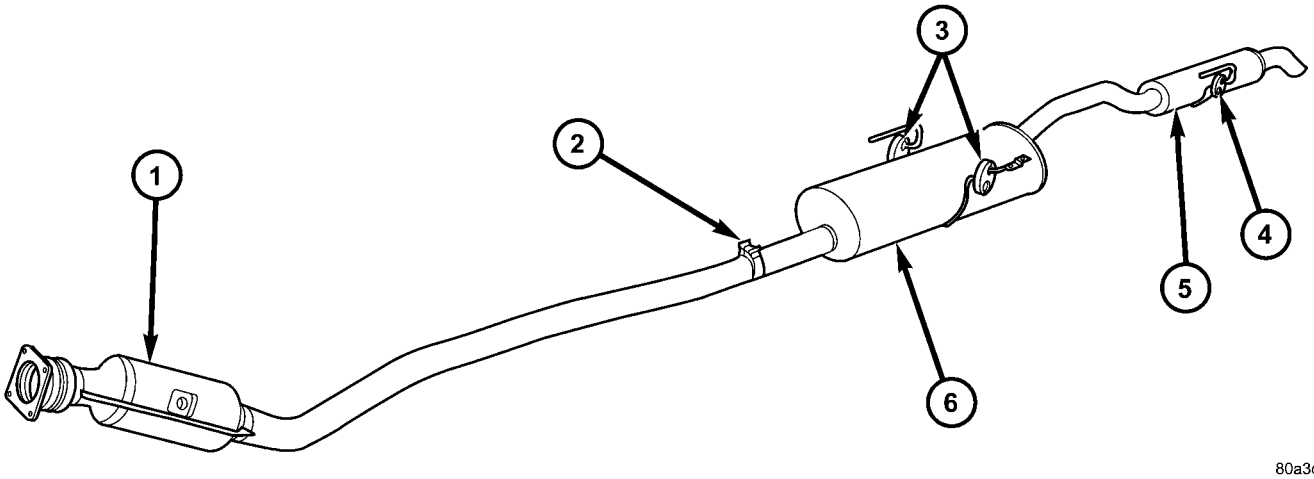

Fig. 1 Exhaust System - Typical (All Vehicles)

1 - CATALYTIC CONVERTER
2 - BAND CLAMP
3 - SUPPORTS - MUFFLER
4 - SUPPORT - RESONATOR
5 - RESONATOR
6 - MUFFLER

EXHAUST SYSTEM (Continued)

DIAGNOSIS AND TESTING

DIAGNOSIS AND TESTING - EXCESSIVE EXHAUST SYSTEM NOISE

CONDITION	POSSIBLE CAUSES	CORRECTION
EXCESSIVE EXHAUST NOISE (UNDER HOOD)	1. Exhaust manifold cracked or broken.	1. Replace manifold.
	2. Manifold to cylinder head leak.	2. Tighten manifold and/or replace gasket.
	3. EGR Valve to manifold gasket leakage.	3. Tighten fasteners or replace gasket.
	4. EGR Valve to EGR tube gasket leakage.	4. Tighten fasteners or replace gasket.
	5. EGR tube to manifold tube leakage.	5. Tighten tube nut.
	6. Exhaust flex-joint to manifold leak.	6. Tighten joint fasteners and/or replace gasket.
	7. Exhaust flex-joint.	7. Replace catalytic converter assembly.
	8. Pipe and shell noise from front exhaust pipe.	8. Characteristic of single wall pipe.
EXCESSIVE EXHAUST NOISE	1. Leak at exhaust pipe joints.	1. Tighten clamps at leaking joints.
	2. Burned or rusted out muffler assembly or exhaust pipe.	2. Replace muffler resonator tailpipe assembly or exhaust pipe with catalytic converter assembly.
	3. Burned or rusted out resonator.	3. Replace muffler resonator tailpipe assembly.
	4. Restriction in exhaust system.	4. Perform Exhaust System Restriction Check. Replace component as necessary.
	5. Converter material in muffler.	5. Replace muffler and converter assemblies. Check fuel injection and ignition systems for proper operation.

DIAGNOSIS AND TESTING - EXHAUST SYSTEM RESTRICTION CHECK

Exhaust system restriction can be checked by measuring back pressure using the DRB III® and PEP module pressure tester.

WARNING: THE NORMAL OPERATING TEMPERATURE OF THE EXHAUST SYSTEM IS VERY HIGH. THEREFORE, NEVER WORK AROUND OR ATTEMPT TO SERVICE ANY PART OF THE EXHAUST SYSTEM UNTIL IT IS COOLED. SPECIAL CARE SHOULD BE TAKEN WHEN WORKING NEAR THE CATALYTIC CONVERTER. THE TEMPERATURE OF THE CONVERTER RISES TO A HIGH LEVEL AFTER A SHORT PERIOD OF ENGINE OPERATION TIME.

NOTE: For Special Tool identification, (Refer to 11 - EXHAUST SYSTEM - SPECIAL TOOLS).

(1) Disconnect and remove the upstream (before catalytic converter) oxygen sensor. (Refer to 14 - FUEL SYSTEM/FUEL INJECTION/O2 SENSOR - REMOVAL)

(2) Install the Exhaust Back Pressure Fitting Adaptor CH8519.

(3) Connect the Low Pressure Sensor (15 psi) CH7063 to the back pressure fitting.

(4) Following the PEP module instruction manual, connect all required cables to the DRB III® and PEP module. Select the available menu options on the DRBIII® display screen for using the digital pressure gauge function.

EXHAUST SYSTEM (Continued)

(5) Apply the park brake and start the engine.

(6) With transmission in Park or Neutral, raise engine speed to 2000 RPM. Monitor the pressure readings on the DRBIII®. Back pressure should not exceed specified limit. Refer to specification in table below EXHAUST BACK PRESSURE LIMITS.

(7) If pressure exceeds maximum limits, inspect exhaust system for restricted component. For further catalytic converter inspection procedures, (Refer to 11 - EXHAUST SYSTEM/CATALYTIC CONVERTER - INSPECTION). Replace component(s) as necessary.

EXHAUST BACK PRESSURE LIMITS

Exhaust Back Pressure Limit (Max)	
Vehicle in Park/Neutral (no load) @2000 RPM	3.45 Kpa (0.5 psi)

INSPECTION

Inspect the exhaust pipes, catalytic converters, muffler, and resonators for cracked joints, broken welds and corrosion damage that would result in a leaking exhaust system. Inspect the clamps, support brackets, and insulators for cracks and corrosion damage.

NOTE: Slip joint band clamps are spot welded to exhaust system. If a band clamp must be replaced, the spot weld must be ground off.

ADJUSTMENTS

A misaligned exhaust system is usually indicated by a vibration, rattling noise, or binding of exhaust system components. These noises are sometimes hard to distinguish from other chassis noises. Inspect exhaust system for broken, damaged or loose components such as; clamps, heat shields, isolators, and hanger brackets. Replace or tighten as necessary. It is important that exhaust system clearances and alignment be maintained.

Perform the following procedures to align the exhaust system:

(1) Loosen band clamp at catalytic converter pipe to muffler/resonator assembly.

(2) Align the exhaust system by inserting pipe inward or outward until specification is achieved as shown in (Fig. 2).

(3) Tighten band clamp to 54 N·m (40 ft. lbs.).

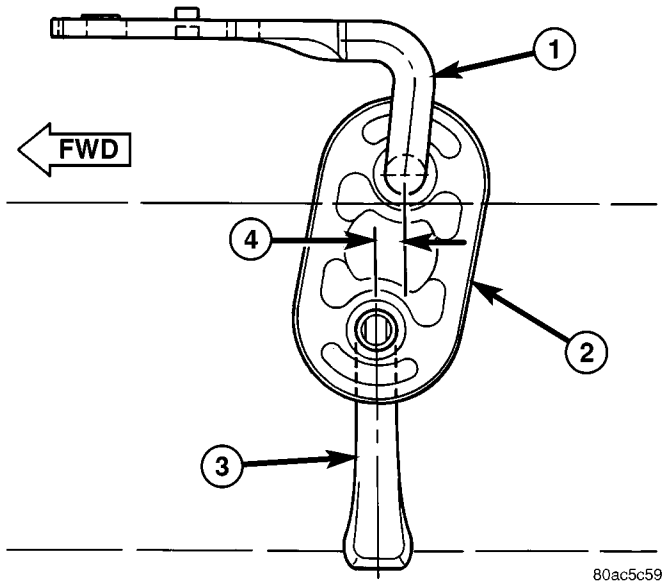

Fig. 2 Exhaust System Alignment

1 - HANGER BRACKET TO BODY
2 - ISOLATOR
3 - HANGER - MUFFLER/RESONATOR SUPPORT
4 - 6 mm (0.25 in.)

SPECIFICATIONS

TORQUE

DESCRIPTION	N·m	Ft. Lbs.	In. Lbs.
Band Clamp	54	40	—
Cross-over Pipe—Fastener	41	30	—
Exhaust Manifold Flange—Fastener	37	—	325
Heat Shield (Muffler)—Fastener	2.6	—	23
Heat Shield (Toe Board)—Fastener	2.6	—	23
Heat Shield (Resonator Pipe)—Fastener	2.6	—	23
Insulator Mounting Bracket—Bolts	28	—	250

EXHAUST SYSTEM (Continued)

SPECIAL TOOLS

EXHAUST SYSTEM

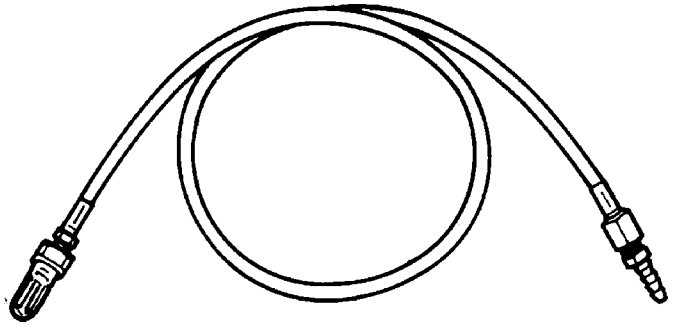

Back Pressure Test Adapter - CH8519

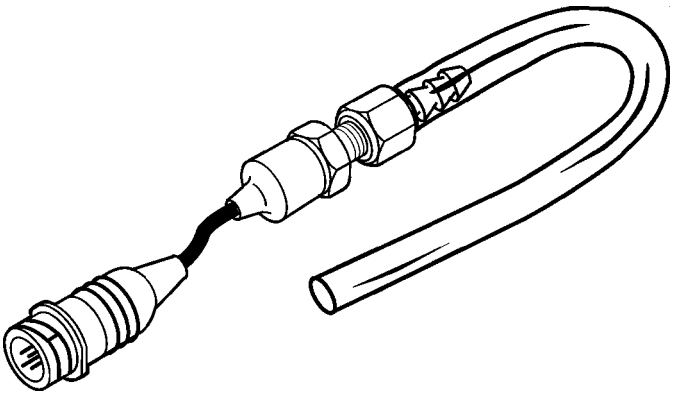

Pressure Transducer CH7063

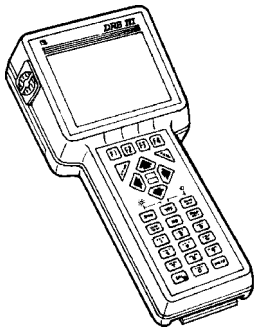

DRB III & PEP Module - OT-CH6010A

CATALYTIC CONVERTER

DESCRIPTION

The toe board three-way catalytic converter is connected to the exhaust manifold by the use of flex joint and a gasket. The outlet connects to the muffler inlet pipe and is secured with a band type clamp (Fig. 1).

The exhaust flex-joint coupling (Fig. 3) is used to secure the catalytic converter to the exhaust manifold. The flex-joint has four bolts, four flag nuts and a gasket that are separate parts from the exhaust flex-joint. The flex-joint is welded to the catalytic converter.

CAUTION: When servicing, care must be exercised not to dent or bend the bellows or bellows cover of the flex-joint. Should this occur, the flex-joint will eventually fail and require the catalytic converter be replaced.

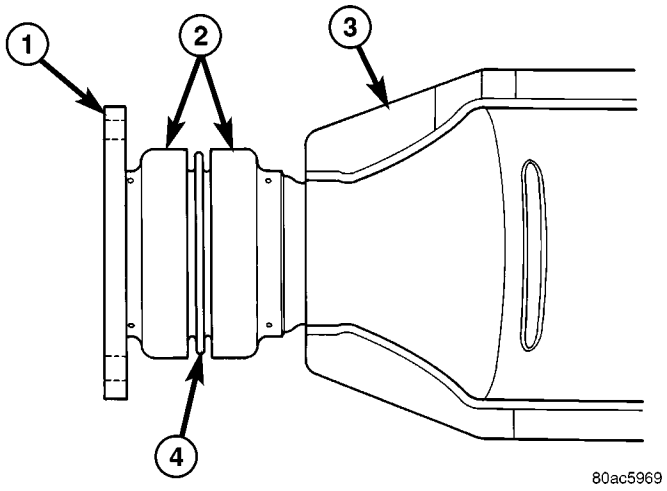

Fig. 3 Flex-joint

1 - FLANGE
2 - END CAPS
3 - CATALYTIC CONVERTER
4 - FLEXIBLE BELLOWS

OPERATION

The three-way catalytic converter simultaneously converts three exhaust emissions into harmless gases. Specifically, HC and CO emissions are converted into water (H2O) and carbon dioxide (CO2). Oxides of Nitrogen (NOx) are converted into Nitrogen (N) and Oxygen. The three-way catalyst is most efficient in converting HC, CO and NOx at the stoichiometric air fuel ratio of 14.7:1.

The oxygen content in a catalyst is important for efficient conversion of exhaust gases. When a high oxygen content (lean) air/fuel ratio is present for an extended period, oxygen content in a catalyst can reach a maximum. When a rich air/fuel ratio is present for an extended period, the oxygen content in the catalyst can become totally depleted. When this occurs, the catalyst fails to convert the gases. This is known as catalyst ″punch through.″

CATALYTIC CONVERTER (Continued)

Catalyst operation is dependent on its ability to store and release the oxygen needed to complete the emissions-reducing chemical reactions. As a catalyst deteriorates, its ability to store oxygen is reduced. Since the catalyst's ability to store oxygen is somewhat related to proper operation, oxygen storage can be used as an indicator of catalyst performance. Refer to the appropriate Diagnostic Information for diagnosis of a catalyst related Diagnostic Trouble Code (DTC).

The combustion reaction caused by the catalyst releases additional heat in the exhaust system, causing temperature increases in the area of the reactor under severe operating conditions. Such conditions can exist when the engine misfires or otherwise does not operate at peak efficiency. **Do not** remove spark plug wires from plugs or by any other means short out cylinders. Failure of the catalytic converter can occur due to temperature increases caused by unburned fuel passing through the converter. This deterioration of the catalyst core can result in excessively high emission levels, noise complaints, and exhaust restrictions.

Unleaded gasoline must be used to avoid ruining the catalyst core. Do not allow engine to operate above 1200 RPM in neutral for extended periods over 5 minutes. This condition may result in excessive exhaust system/floor pan temperatures because of no air movement under the vehicle.

The flex joint allows flexing as the engine moves, preventing breakage that could occur from the back-and-forth motion of a transverse mounted engine.

CAUTION: Due to exterior physical similarities of some catalytic converters with pipe assemblies, extreme care should be taken with replacement parts. There are internal converter differences required in some parts of the country (particularly vehicles built for States with strict emission requirements) and between model years.

REMOVAL

(1) Loosen clamp and disconnect the muffler/resonator assembly from catalytic converter pipe.

(2) Disconnect downstream oxygen sensor electrical connector (Fig. 4). For removal of downstream oxygen sensor, (Refer to 14 - FUEL SYSTEM/FUEL INJECTION/O2 SENSOR - REMOVAL).

(3) Remove catalytic converter to exhaust manifold attaching fasteners (Fig. 5).

(4) Remove catalytic converter and gasket (Fig. 5).

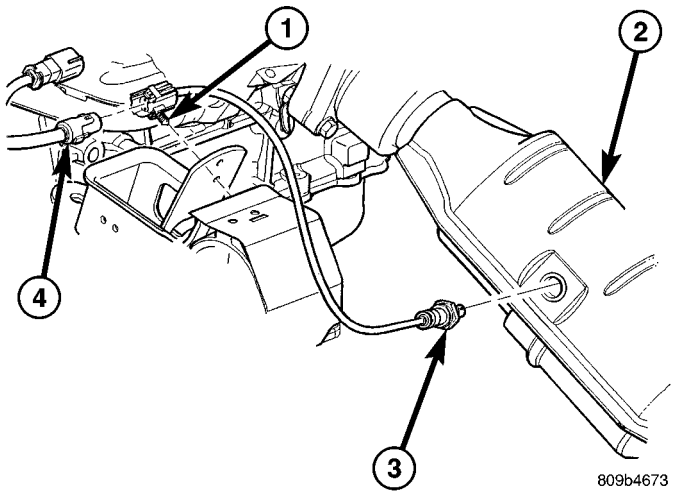

Fig. 4 Downstream Oxygen Sensor

1 - OXYGEN SENSOR CONNECTOR
2 - CATALYTIC CONVERTER
3 - DOWNSTREAM OXYGEN SENSOR
4 - ENGINE HARNESS CONNECTOR

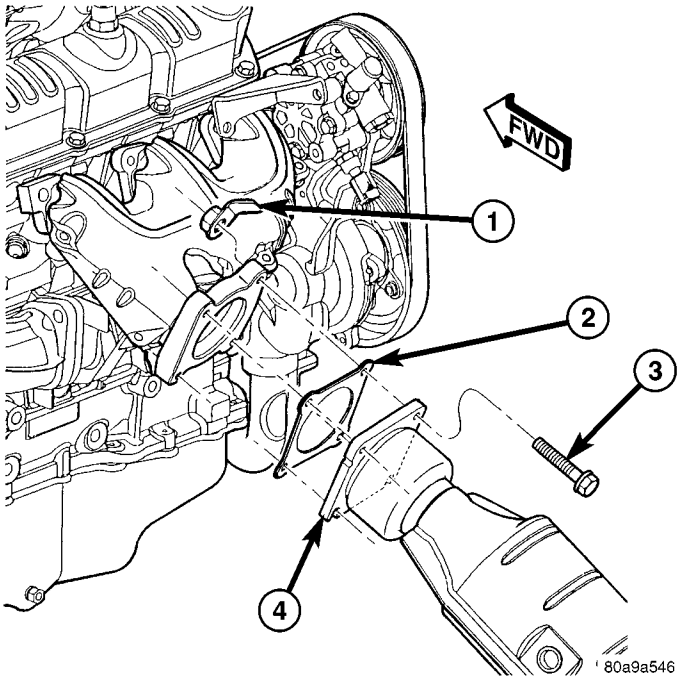

Fig. 5 Catalytic Converter to Exhaust Manifold

1 - FLAG NUT
2 - GASKET
3 - BOLT
4 - CATALYTIC CONVERTER

CATALYTIC CONVERTER (Continued)

INSPECTION

WARNING: THE NORMAL OPERATING TEMPERATURE OF THE EXHAUST SYSTEM IS VERY HIGH. THEREFORE, NEVER ATTEMPT TO SERVICE ANY PART OF THE EXHAUST SYSTEM UNTIL IT IS COOLED. SPECIAL CARE SHOULD BE TAKEN WHEN WORKING NEAR THE CATALYTIC CONVERTER. THE TEMPERATURE OF THE CONVERTER RISES TO A HIGH LEVEL AFTER A SHORT PERIOD OF ENGINE OPERATION TIME.

Check catalytic converter for a flow restriction. (Refer to 11 - EXHAUST SYSTEM - DIAGNOSIS AND TESTING) Exhaust System Restriction Check for procedure.

Visually inspect the catalytic converter element by using a borescope or equivalent. Remove oxygen sensor(s) and insert borescope. If borescope is not available, remove converter and inspect element using a flashlight. Inspect element for cracked or melted substrate.

NOTE: Before replacing a catalytic converter, determine the root cause of failure. Most catalytic converter failures are caused by air, fuel or ignition problems. (Refer to Appropriate Diagnostic Information) for test procedures.

INSTALLATION

(1) Position new gasket onto the manifold flange and install catalytic converter (Fig. 5). Tighten fasteners to 37 N·m (325 in. lbs.).

NOTE: Be careful not to twist or kink the oxygen sensor wires.

(2) Install (if removed) and connect the downstream oxygen sensor (Fig. 4).

(3) Install the muffler/resonator assembly. (Refer to 11 - EXHAUST SYSTEM/MUFFLER - INSTALLATION)

(4) Start the engine and inspect for exhaust leaks. Repair exhaust leaks as necessary.

(5) Check the exhaust system for contact with the body panels. Make the necessary adjustments, if needed.

CROSS-OVER PIPE - 3.3/3.8L

REMOVAL

(1) Disconnect negative cable from battery.

(2) Remove the fasteners attaching the left bank manifold connection to cross-over pipe (Fig. 6).

(3) Raise vehicle and remove the left front wheel.

(4) Access the lower right bank pipe connection fastener through the left front wheel opening using a long ratchet extension. Loosen and remove the lower fastener.

(5) Remove the upper right bank pipe connection fastener by accessing though the catalytic converter floor pan tunnel.

(6) Lower the vehicle.

(7) Remove the cross-over pipe (Fig. 6).

(8) Remove gaskets and discard (Fig. 6).

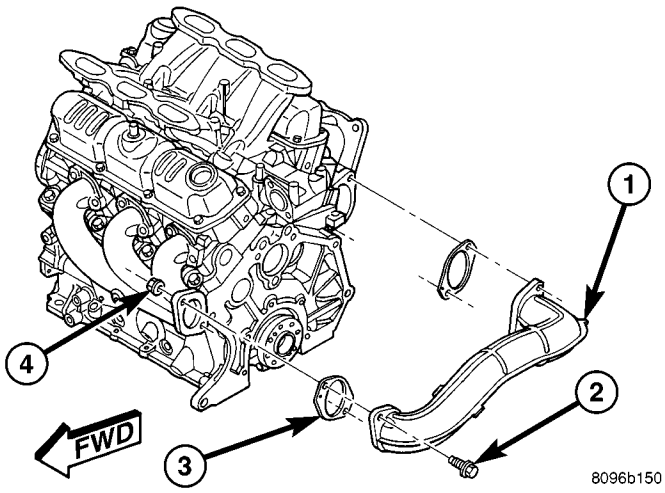

Fig. 6 CROSS-OVER PIPE

1 - CROSS-OVER PIPE
2 - BOLT
3 - GASKET
4 - FLAG NUT

INSTALLATION

(1) Position cross-over pipe to the manifold connections (Fig. 6).

(2) Position new gasket on left bank (front) pipe connection and loosely install fasteners (Fig. 6).

(3) Raise the vehicle.

(4) Position new gasket on the right bank pipe connection and install fasteners.

(5) Tighten right bank upper fastener to 41 N·m (30 ft. lbs.).

(6) Tighten right bank lower fastener to 41 N·m (30 ft. lbs.) using a long ratchet extension accessing through the left wheel opening.

(7) Install the left front wheel and lower vehicle.

(8) Tighten the left bank pipe connection fasteners to 41 N·m (30 ft. lbs.) (Fig. 6).

(9) Start the engine and inspect for exhaust leaks. Repair exhaust leaks as necessary.

(10) Check the exhaust system for contact with the body panels. Make the necessary adjustments, if needed.

HEAT SHIELDS

DESCRIPTION

The exhaust system heat shields (Fig. 7), (Fig. 8), or (Fig. 9) are attached to the under body of the vehicle. On vehicles equipped with All Wheel Dive (AWD), an additional heat shield is mounted to the catalytic converter.

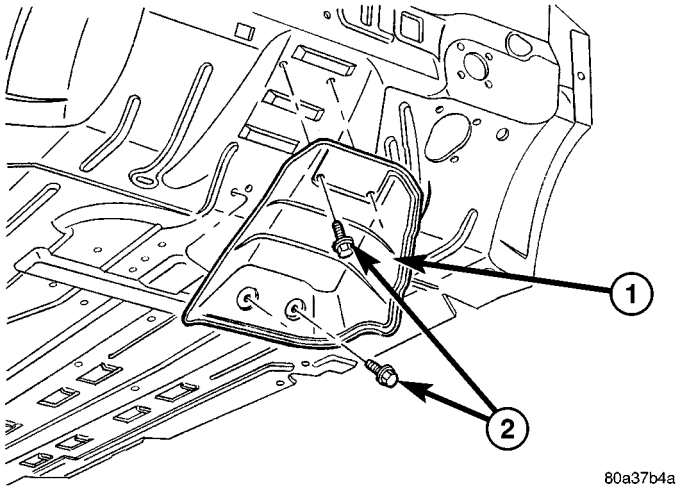

Fig. 7 CATALYTIC CONVERTER HEAT SHIELD

1 - HEAT SHIELD - CATALYTIC CONVERTER
2 - SCREW (QTY. 4)

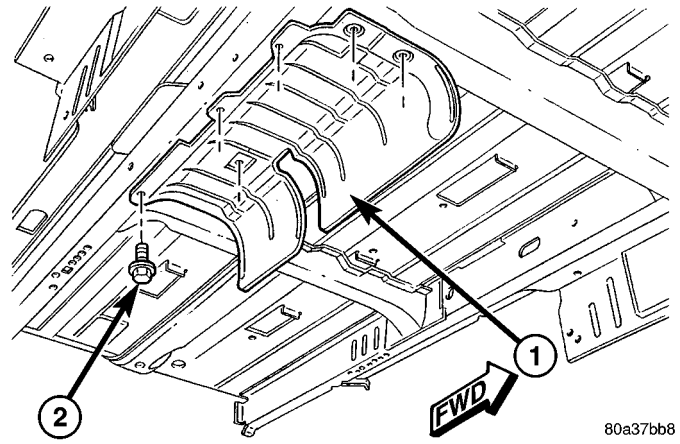

Fig. 8 MUFFLER HEAT SHIELD

1 - HEAT SHIELD - MUFFLER
2 - SCREW (QTY. 6)

OPERATION

Heat shields are needed to protect both the vehicle and the environment from the high temperatures developed near the catalytic converter.

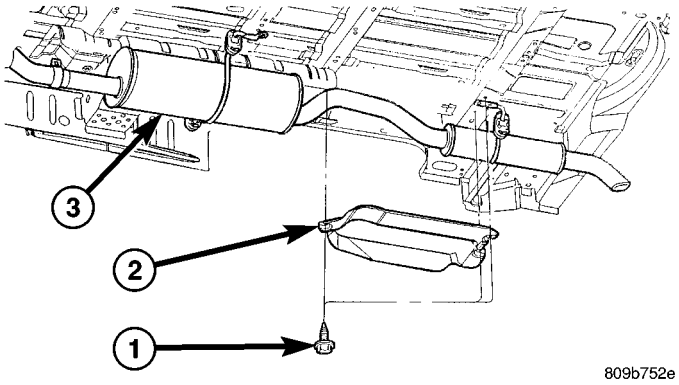

Fig. 9 RESONATOR PIPE HEAT SHIELD

1 - SCREW (QTY. 3)
2 - HEAT SHIELD - RESONATOR PIPE
3 - MUFFLER

Avoid application of rust prevention compounds or undercoating materials to exhaust system floor pan heat shields on cars so equipped. Light over spray near the edges is permitted. Application of coating will greatly reduce the efficiency of the heat shields resulting in excessive floor pan temperatures and objectionable fumes.

REMOVAL

(1) Raise vehicle on hoist.
(2) Remove fasteners attaching applicable heat shield (Fig. 7), (Fig. 8), or (Fig. 9).
(3) Remove heat shield(s).

INSTALLATION

(1) Position heat shield(s) to underbody.
(2) Install heat shield fasteners and tighten to 2.6 N·m (23 in. lbs.) (Fig. 7), (Fig. 8), or (Fig. 9).
(3) Lower vehicle.
(4) Start the engine and inspect for exhaust leaks. Repair exhaust leaks as necessary.
(5) Check the exhaust system for contact with the body panels. Make the necessary adjustments, if needed.

MUFFLER

REMOVAL

(1) Raise vehicle on a body contact type hoist.

NOTE: To provide removal clearance between muffler/resonator pipe and rear axle parts, the rear suspension must be relieved of all body weight.

(2) Apply a penetrating oil to clamp nuts of component requiring removal.

MUFFLER (Continued)

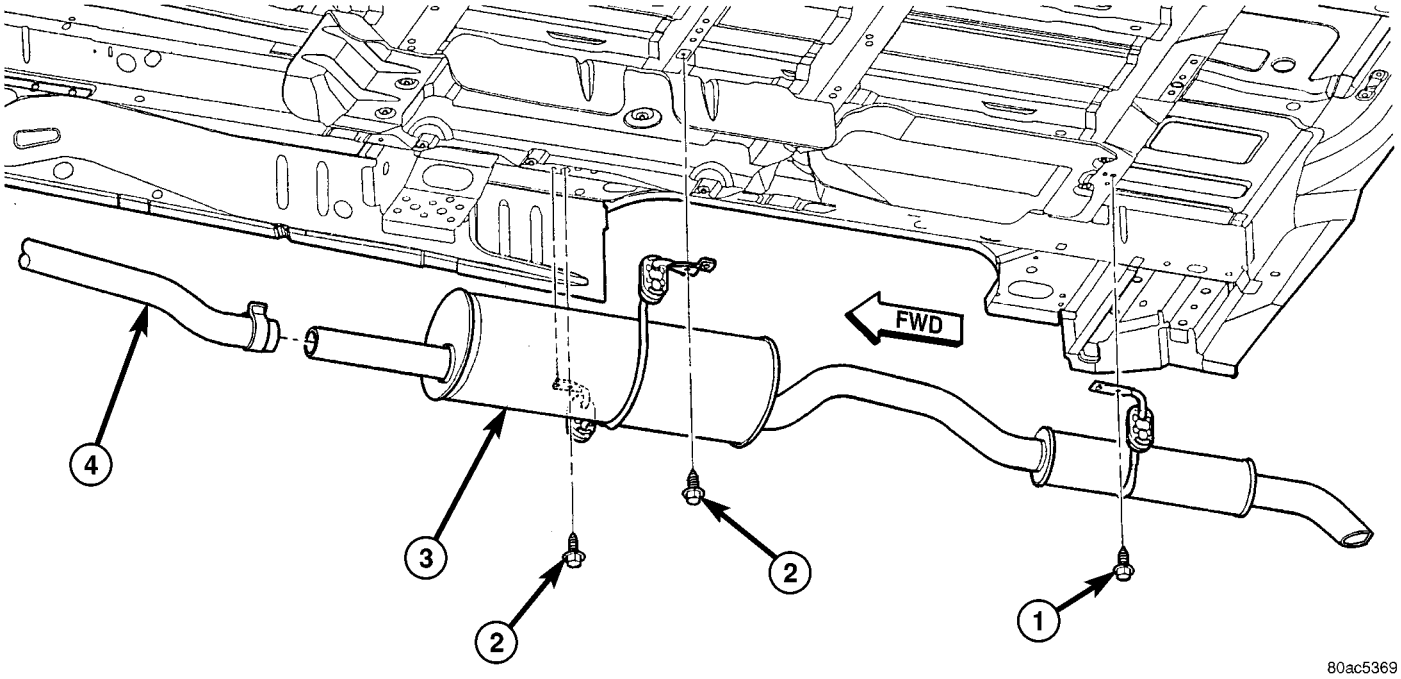

Fig. 10 Exhaust System - Typical (All Vehicles)

1 - SCREW - RESONATOR HANGER TO BODY
2 - SCREW - MUFFLER HANGER TO BODY
3 - MUFFLER & RESONATOR ASSEMBLY
4 - CATALYTIC CONVERTER PIPE

CAUTION: When servicing the exhaust system, care must be exercised not to dent or bend the bellows of the flex-joint. Should this occur, the flex-joint will eventually fail, requiring replacement of the catalytic converter.

(3) Disconnect the right side axle half shaft from the rear differential module (AWD equipped only).

(4) Loosen the band clamp (Fig. 10) at the muffler to converter pipe connection.

(5) Remove the exhaust hangers to body screws (Fig. 10).

(6) Separate muffler pipe from converter pipe.

(7) Remove muffler/resonator assembly by moving assembly forward and guiding the resonator through the rear axle to body opening.

(8) Clean ends of pipes or muffler to assure mating of all parts. Discard broken or worn insulators, rusted clamps, supports and attaching parts. **When replacement is required on any component of the exhaust system, it is important that original equipment parts (or equivalent) be used for the following conditions:**

- Ensure proper alignment with other components in the system.
- Provide acceptable exhaust noise levels.
- Provide proper exhaust system back pressure for maintaining emission and performance levels.

INSTALLATION

(1) Install the muffler/resonator assembly by guiding resonator between the rear axle and body.

(2) Connect the muffler pipe to the converter pipe but do not tighten band clamp (Fig. 10).

(3) Position hangers to body and install screws starting at the resonator working forward (Fig. 10). Tighten hanger screws to 28 N·m (250 in. lbs.).

(4) Insert muffler pipe into catalytic converter pipe until the hangers are positioned as shown in (Fig. 11)

CAUTION: Band clamps should never be tightened such that the two sides of the clamps are bottomed out against the center hourglass shaped center block. Once this occurs, the clamp band has been stretched and has lost its clamping force and must be replaced.

To replace the band clamp; remove the nut and peel back the ends of the clamp until spot weld breaks. Clean remaining spot weld from the pipe using a file or grinder until surface is smooth.

MUFFLER (Continued)

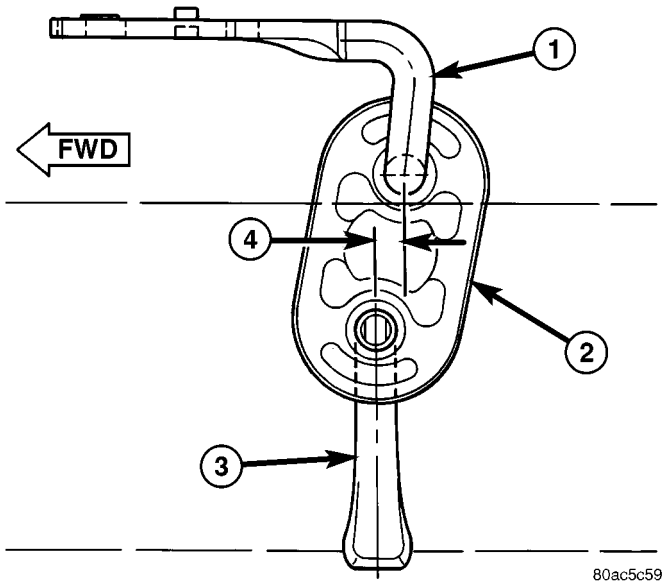

Fig. 11 Exhaust System Alignment

1 - HANGER BRACKET TO BODY
2 - ISOLATOR
3 - HANGER - MUFFLER/RESONATOR SUPPORT
4 - 6 mm (0.25 in.)

NOTE: Maintain proper clamp orientation when replacing with new clamp.

(5) Tighten the band clamp to 55 N·m (40 ft. lbs.) (Fig. 12).

(6) Connect the right side half shaft to the rear differential module (AWD equipped only).

(7) Start the engine and inspect for exhaust leaks. Repair exhaust leaks as necessary.

(8) Check the exhaust system for contact with the body panels. Make the necessary adjustments, if needed.

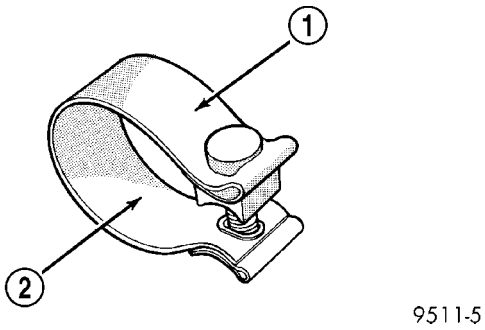

Fig. 12 Band Clamp

1 - BAND CLAMP
2 - TORQUE SPECIFICATION

RESONATOR

REMOVAL

(1) (Refer to 11 - EXHAUST SYSTEM/MUFFLER - REMOVAL)

INSTALLATION

(1) (Refer to 11 - EXHAUST SYSTEM/MUFFLER - INSTALLATION)

(2) Start the engine and inspect for exhaust leaks. Repair exhaust leaks as necessary.

(3) Check the exhaust system for contact with the body panels. Make the necessary adjustments, if needed.

FRAME & BUMPERS

TABLE OF CONTENTS

	page
BUMPERS	
SPECIFICATIONS - TORQUE	1
FRONT FASCIA	
REMOVAL	1
INSTALLATION	1
FRONT BUMPER REINFORCEMENT	
REMOVAL	3
INSTALLATION	3
REAR FASCIA	
REMOVAL	4
INSTALLATION	4
REAR BUMPER REINFORCEMENT	
REMOVAL	5
INSTALLATION	5
REAR FASCIA - SCUFF PAD	
REMOVAL	5
INSTALLATION	5
FRAME	
SPECIFICATIONS	
SPECIFICATIONS - FRAME DIMENSIONS	6
SPECIFICATIONS - FRAME DIMENSIONS - FOLD-IN-FLOOR SEATS ONLY	11
SPECIFICATIONS - TORQUE	14
FRONT CRADLE CROSSMEMBER	
DESCRIPTION	
DESCRIPTION - FRONT CRADLE CROSSMEMBER	14
DESCRIPTION - FRONT CRADLE CROSSMEMBER THREAD REPAIR	14
REMOVAL	15
INSTALLATION	16
FRONT CROSSMEMBER MOUNT BUSHINGS	
REMOVAL	17
INSTALLATION	17

BUMPERS

SPECIFICATIONS - TORQUE

DESCRIPTION	N·m	Ft. Lbs.	In. Lbs.
Front bumper reinforcement attaching nut	54	40	—
Rear bumper reinforcement attaching nut	27	20	—

FRONT FASCIA

REMOVAL

(1) Release hood latch and open hood.

(2) Remove the headlamp assemblies (Refer to 8 - ELECTRICAL/LAMPS/LIGHTING - EXTERIOR/ HEADLAMP - REMOVAL).

(3) Hoist vehicle and support with safety stands.

(4) Remove the five push pin fasteners attaching bottom of fascia/air dam to radiator closure panel.

(5) Remove front wheels.

(6) Remove front wheelhouse splash shields fasteners as necessary to gain access to bolts attaching front fascia to fender. (Refer to 23 - BODY/EXTERIOR/ WHEELHOUSE SPLASH SHIELD - REMOVAL).

(7) Remove the two bolts and two nuts attaching fascia to the front fenders (Fig. 1) and (Fig. 2).

(8) Disconnect fog lamp wire connectors, if necessary.

(9) Lower vehicle.

(10) Remove two bolts attaching the upper grille support to the headlamp mounting panel at each side of the grille.

(11) Remove bumper fascia from vehicle.

INSTALLATION

(1) Position front bumper fascia on vehicle (Fig. 1) and (Fig. 2).

(2) Install the two bolts attaching fascia to headlamp mounting panel at each side of grille.

(3) Hoist vehicle and support with safety stands.

FRONT FASCIA (Continued)

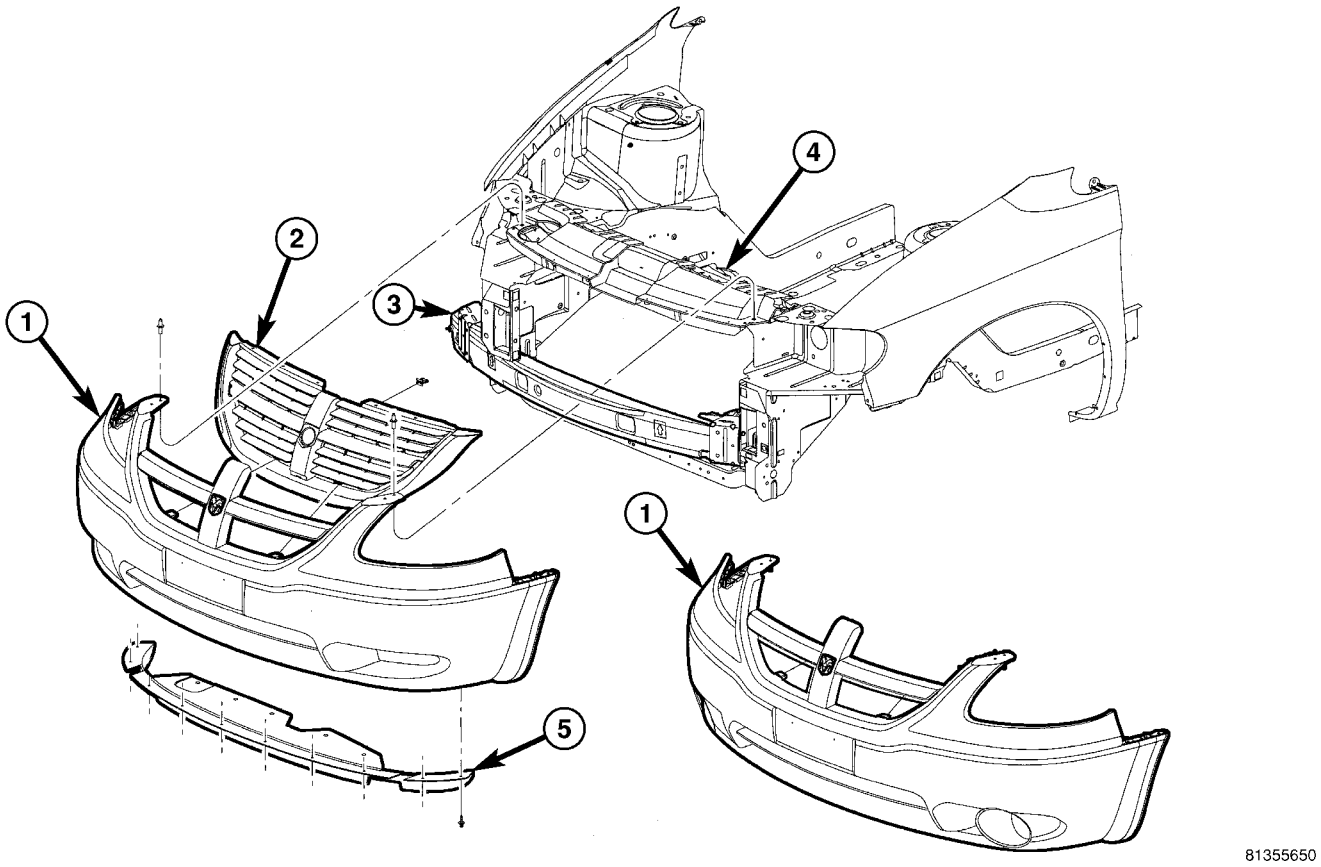

Fig. 1 FRONT FASCIA

1 - FRONT BUMPER FASCIA
2 - GRILLE
3 - BUMPER REINFORCEMENT
4 - RADIATOR ENCLOSURE
5 - AIR DAM

(4) Install the two bolts and two nuts attaching fascia to the front fenders. The fascia should be flush to fender.

(5) Install front wheelhouse splash shields fasteners. (Refer to 23 - BODY/EXTERIOR/ WHEELHOUSE SPLASH SHIELD - INSTALLATION).

(6) Install front wheels.

(7) Connect fog lamp wire connectors, if necessary.

(8) Install the five push pin fasteners attaching bottom of fascia to radiator closure panel.

(9) Lower the vehicle.

(10) Install the headlamp assemblies. (Refer to 8 - ELECTRICAL/LAMPS/LIGHTING - EXTERIOR/ HEADLAMP - INSTALLATION).

FRONT FASCIA (Continued)

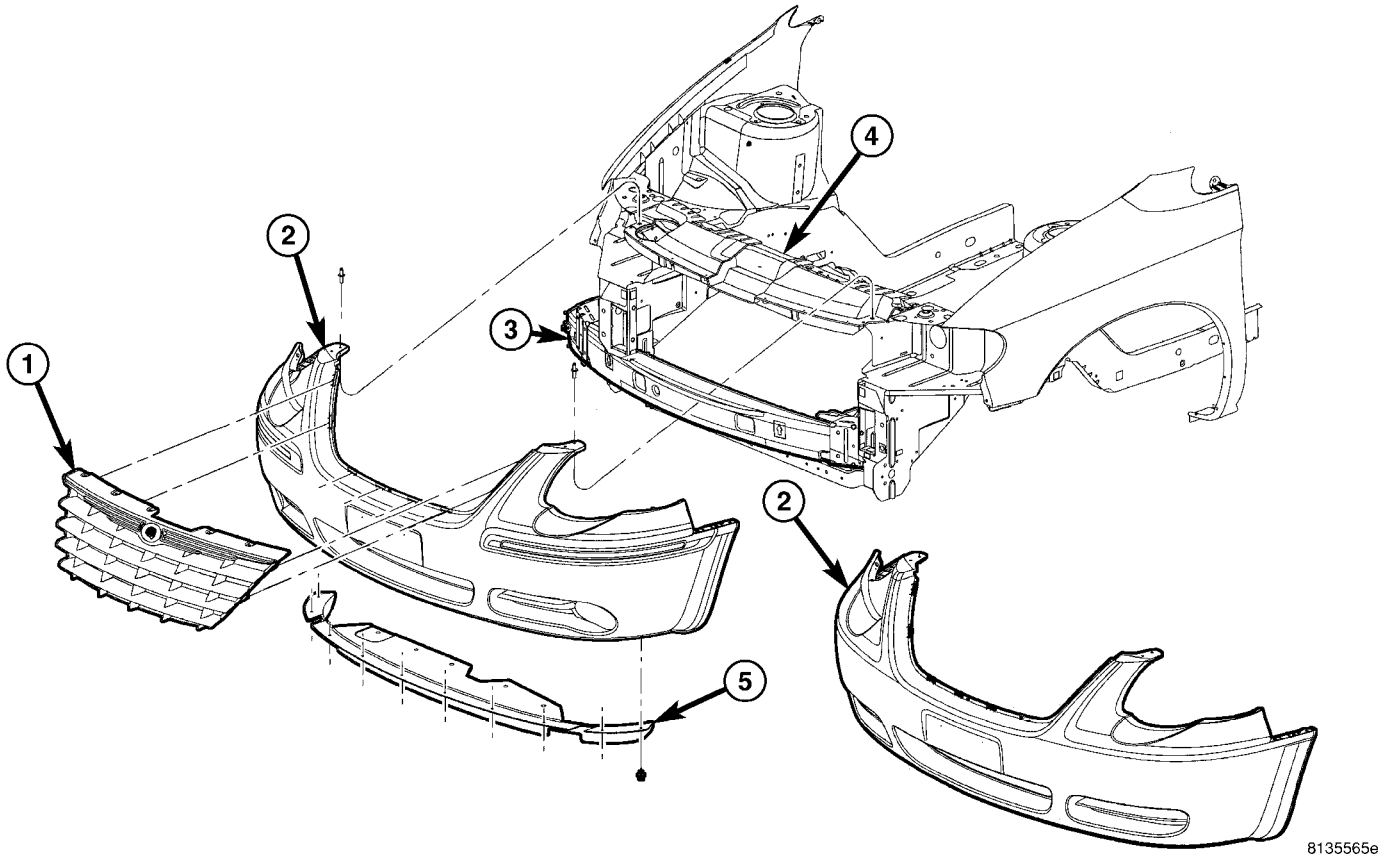

Fig. 2 FRONT FASCIA

1 - GRILLE
2 - FRONT BUMPER FIASCO
3 - BUMPER REINFORCEMENT
4 - RADIATOR ENCLOSURE
5 - AIR DAM

FRONT BUMPER REINFORCEMENT

REMOVAL

(1) Remove front bumper fascia. (Refer to 13 - FRAMES & BUMPERS/BUMPERS/FRONT FASCIA - REMOVAL)

(2) Disconnect the solid state relay (SSR) for the cooling module wiring connector. If bumper reinforcement is being replaced, remove the solid state relay.

(3) Support front bumper reinforcement on a suitable lifting device.

(4) Remove the four nuts attaching front bumper reinforcement to frame rail (Fig. 3).

(5) Remove front bumper reinforcement from vehicle.

INSTALLATION

NOTE: Check position of the arrows molded into the foam for correct orientation.

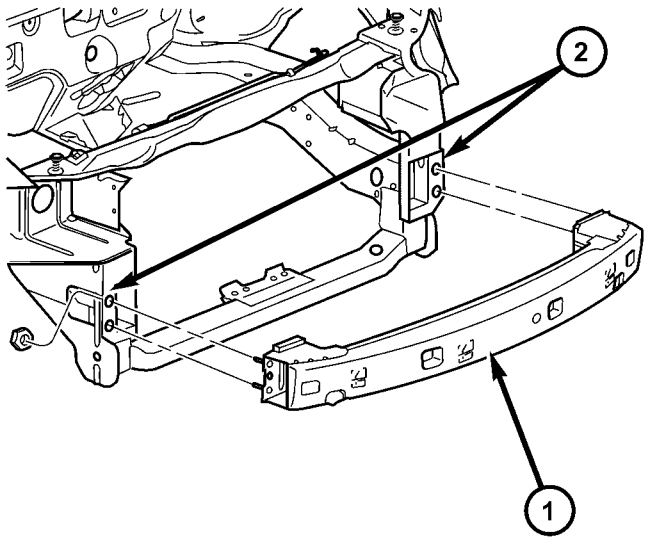

Fig. 3 FRONT BUMPER REINFORCEMENT

1 - FRONT BUMPER REINFORCEMENT
2 - FRAME RAILS

FRONT BUMPER REINFORCEMENT (Continued)

(1) Support front bumper reinforcement using a suitable lifting device and lift into position.
(2) Install the four nuts attaching reinforcement to frame rails. Tighten nuts to 54 N·m (40 ft. lbs.) torque.
(3) Connect the solid state relay (SSR) wiring connector. If bumper reinforcement was replaced, install the solid state relay onto the bumper reinforcement.
(4) Install front fascia. (Refer to 13 - FRAMES & BUMPERS/BUMPERS/FRONT FASCIA - INSTALLATION).

REAR FASCIA

REMOVAL

(1) Open liftgate.
(2) Remove attaching screw from upper fascia to the liftgate tower, right side and left side.
(3) Hoist and support vehicle with safety stands.
(4) Disconnect rear park assist wire connector, if equipped.
(5) Remove the three screws attaching rear fascia to rear fascia brackets on right side and left side (Fig. 4).
(6) Remove the four plastic push pin attaching bottom of rear fascia to fascia support.
(7) Remove rear fascia from vehicle by lifting sides of fascia up and outboard to release from rear fascia brackets.

INSTALLATION

(1) Hoist and support vehicle with safety stands.
(2) Position rear fascia on vehicle (Fig. 5).
(3) Connect the rear park assist wire connector, if equipped.
(4) Engage front edge of fascia under the liftgate tower. Install screw in liftgate tower right side and left side.
(5) Engage sides of fascia to top and front edge of the rear fascia brackets.

NOTE: Verify fascia is still engaged under the liftgate. Ensure acceptable and consistent gap between liftgate and fascia.

(6) Install three screws attaching rear fascia to rear fascia brackets, right side and left side.
(7) Install the four plastic push pins attaching bottom of rear fascia to fascia support.
(8) Lower vehicle.
(9) Install the two screws attaching the upper fascia to the fascia support.

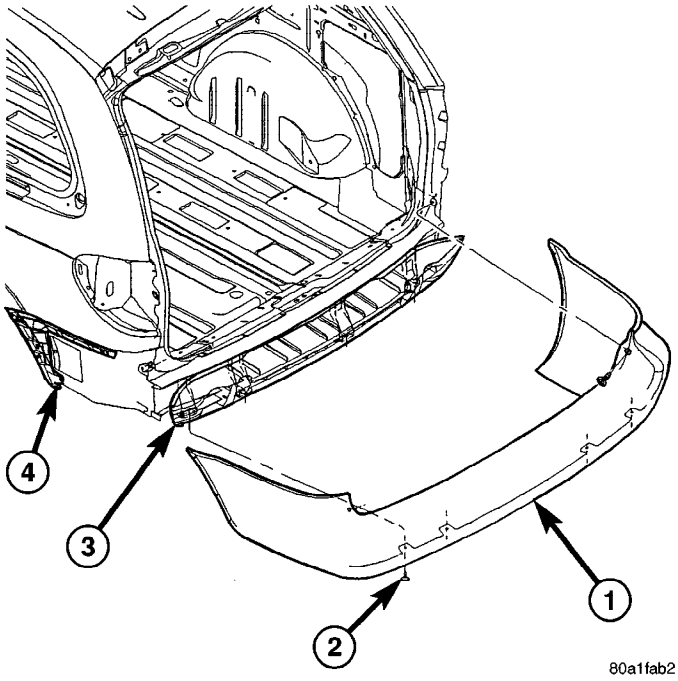

Fig. 4 REAR BUMPER FASCIA

1 - REAR FASCIA
2 - PUSH PINS
3 - REAR BUMPER REINFORCEMENT
4 - REAR FASCIA BRACKET

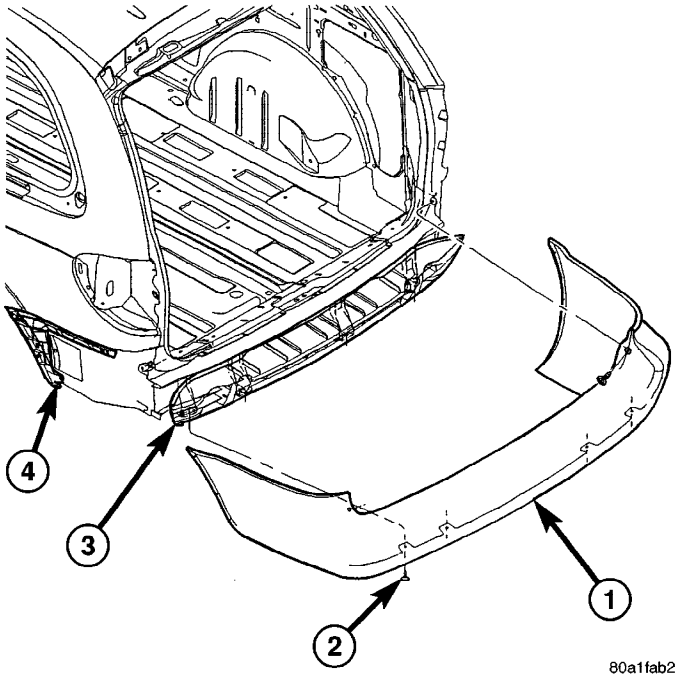

Fig. 5 REAR BUMPER FASCIA

1 - REAR FASCIA
2 - PUSH PINS
3 - REAR BUMPER REINFORCEMENT
4 - REAR FASCIA BRACKET

REAR BUMPER REINFORCEMENT

REMOVAL

(1) Remove rear bumper fascia. (Refer to 13 - FRAMES & BUMPERS/BUMPERS/REAR FASCIA - REMOVAL)

(2) Support rear bumper reinforcement on a suitable lifting device.

(3) Remove the four nuts attaching rear bumper reinforcement to frame rail extensions (Fig. 6).

(4) Remove rear bumper reinforcement from vehicle.

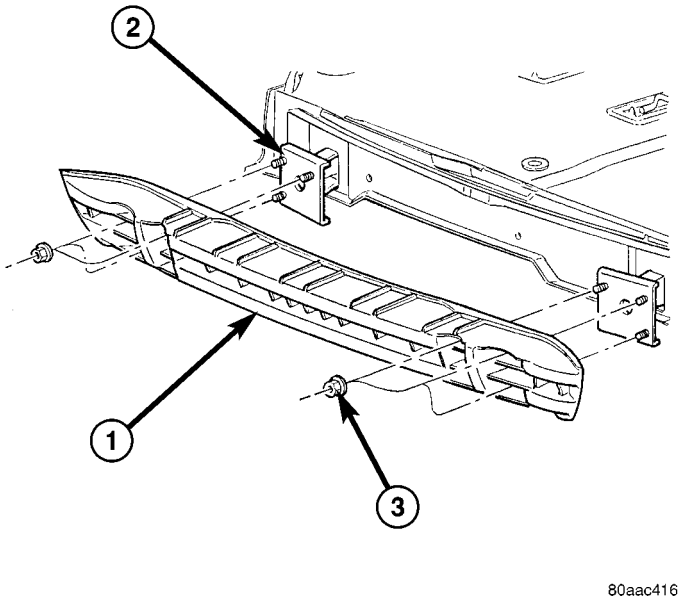

Fig. 6 REAR BUMPER REINFORCEMENT

1 - REAR BUMPER REINFORCEMENT
2 - FRAME RAIL EXTENSIONS
3 - NUTS

INSTALLATION

(1) Support rear bumper reinforcement using a suitable lifting device to lift into position.

(2) Position rear bumper reinforcement on vehicle.

(3) Install the four nuts attaching rear bumper reinforcement to frame rail extensions and tighten to 27 N·m (20 ft. lbs.) torque (Fig. 6).

(4) Install rear bumper fascia. (Refer to 13 - FRAMES & BUMPERS/BUMPERS/REAR FASCIA - INSTALLATION).

REAR FASCIA - SCUFF PAD

REMOVAL

The scuff pad may not be salvageable during the removal process. The scuff pad should be replaced if damaged or broken. Check availability before servicing. The scuff pad serviceability is improved if the rear fascia is to be removed for service.

NOTE: If the rear fascia is to be removed for other service issues or If the scuff pad is to be reused use the steps below.

(1) Remove rear bumper fascia.(Refer to 13 - FRAMES & BUMPERS/BUMPERS/REAR FASCIA - REMOVAL)

(2) Using a trim stick, pry up the rear edge of the scuff pad while squeezing the rear locking tabs from underneath the fascia to release the rear edge of scuff pad from the rear bumper fascia. Pull the scuff pad up and squeeze the remaining tabs to release the remaining of the scuff pad. (Fig. 7).

NOTE: If the rear fascia is to not to be removed for other service issues use the step below.

(3) Using a trim stick, pry up the rear edge of the scuff pad to release tabs from the rear bumper fascia and pull scuff pad to release the forward tabs (Fig. 7).

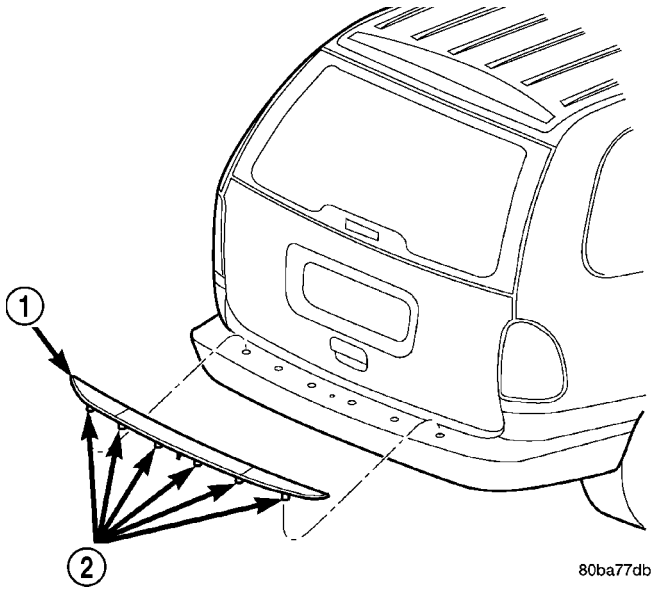

Fig. 7 SCUFF PAD

1 - SCUFF PAD
2 - TABS

INSTALLATION

(1) Verify that there are fifteen slots in the fascia.

(2) Place scuff pad in position (Fig. 7).

REAR FASCIA - SCUFF PAD (Continued)

(3) Align and insert the center forward tab.

(4) Align the remaining tabs and press into the slots, starting in the center and working outboard.

(5) Assure all tabs are fully engaged into the fascia.

(6) If rear bumper fascia has been removed install. (Refer to 13 - FRAME & BUMPERS/BUMPERS/REAR FASCIA - INSTALLATION).

FRAME

SPECIFICATIONS

SPECIFICATIONS - FRAME DIMENSIONS

Frame dimensions are listed in metric scale. All dimensions are from center to center of Principal Locating Point (PLP), or from center to center of PLP and fastener location.

VEHICLE PREPARATION

Position the vehicle on a frame alignment rack, refer to instructions provided with equipment being used. Adjust the vehicle PLP heights to the specified dimension above the work surface (datum line). Vertical dimensions can be taken from the datum line to the locations indicated were applicable.

INDEX

DESCRIPTION	FIGURE
CROSSMEMBER DIMENSIONS	8
ENGINE BOX - TOP VIEW	9
ENGINE COMPARTMENT AND FRAME RAIL - SIDE VIEW	10
FULL VEHICLE - BOTTOM VIEW	11

FRAME (Continued)

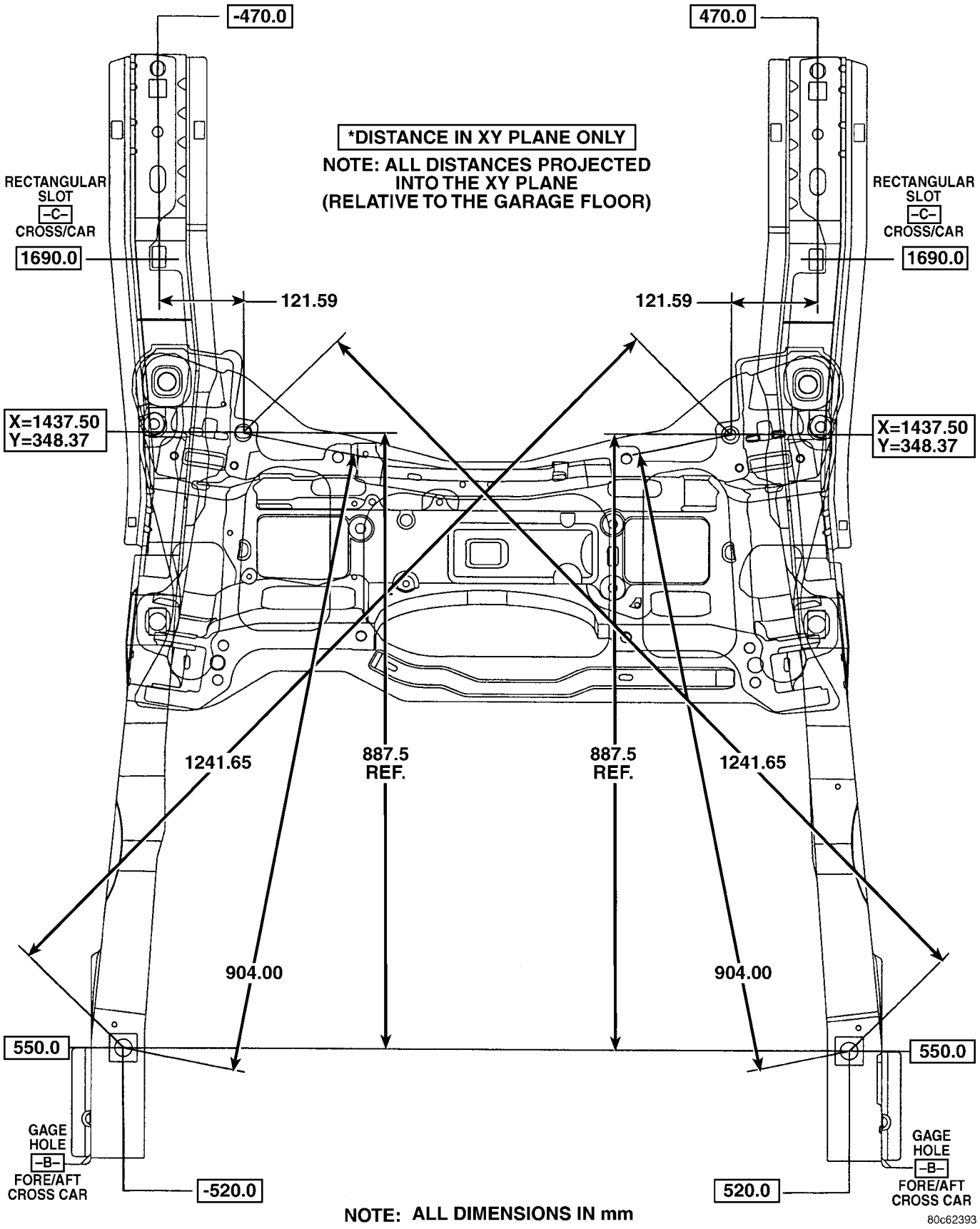

Fig. 8 CROSSMEMBER DIMENSIONS

FRAME (Continued)

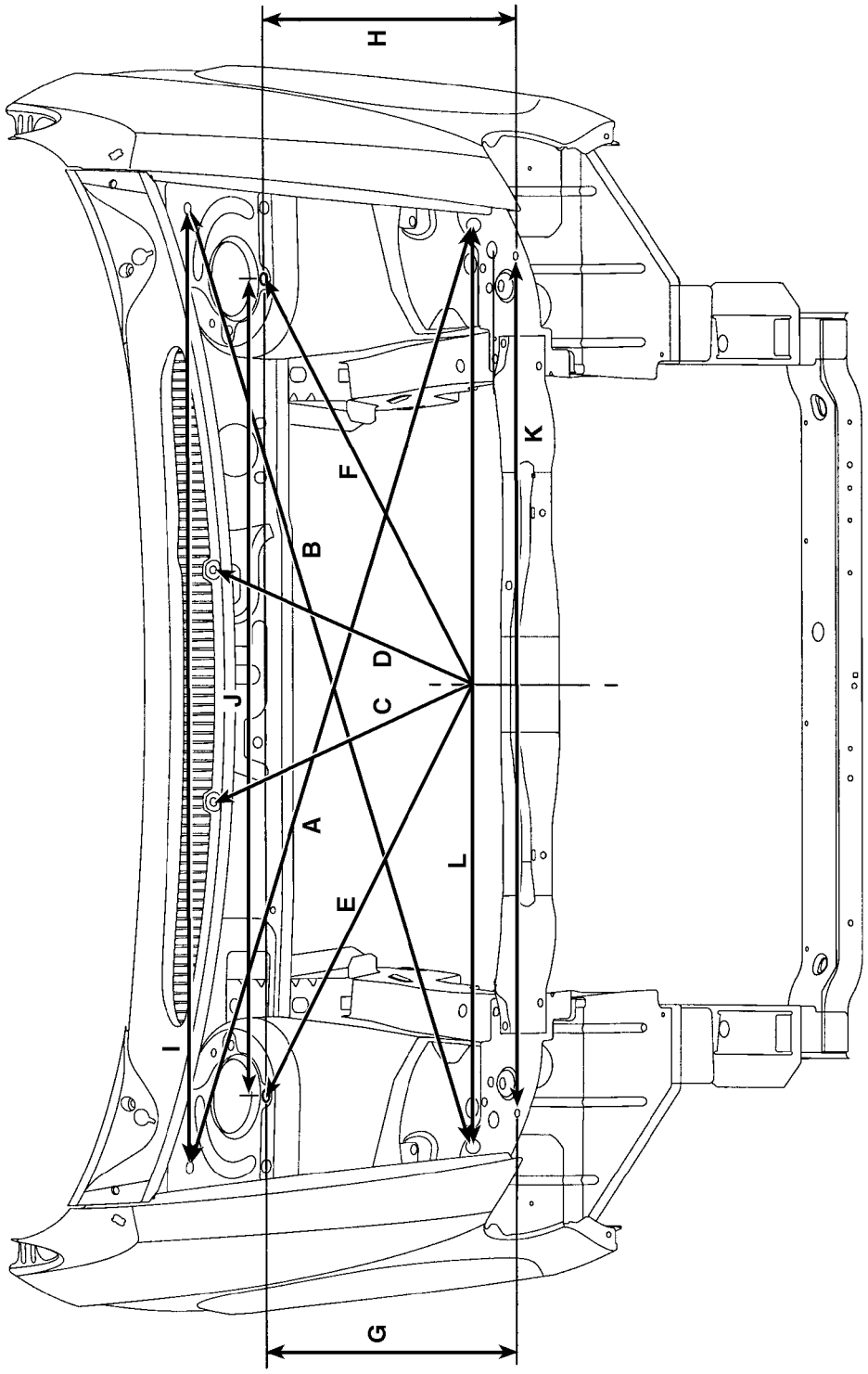

A – 1576.07
B – 1576.07
C – 538.61
D – 538.61
E – 744.05
F – 744.05
G – 503.01
H – 503.01
I – 1395.38
J – 1240.64
K – 1300.00
L – 1452.70

NOTE: ALL MEASUREMENTS CENTER OF HOLE TO CENTER OF HOLE. MEASUREMENTS ARE THE SAME FOR LWB AND SWB.
ALL DIMENSIONS IN mm

Fig. 9 ENGINE BOX - TOP VIEW

FRAME (Continued)

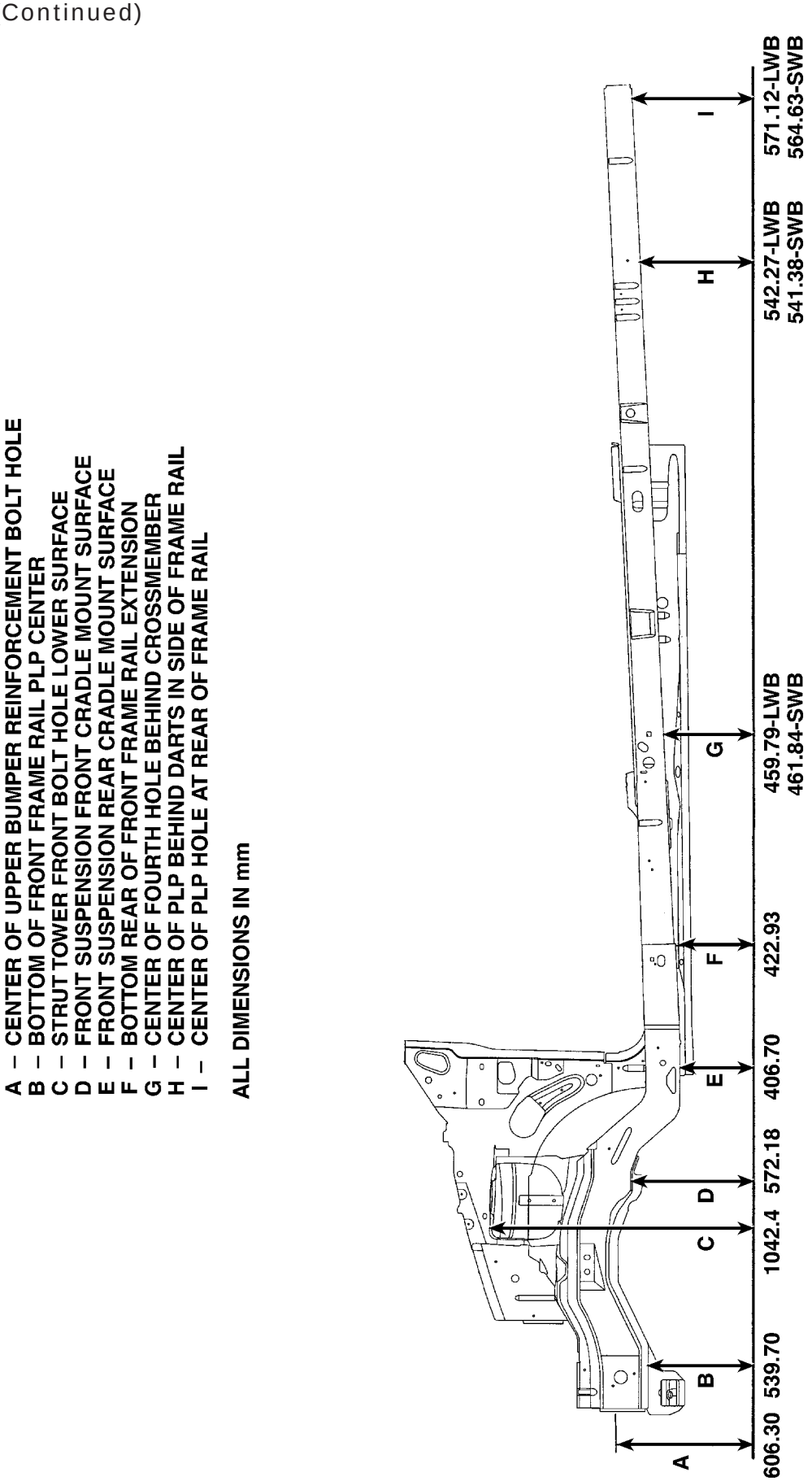

Fig. 10 ENGINE COMPARTMENT AND FRAME RAIL - SIDE VIEW

FRAME (Continued)

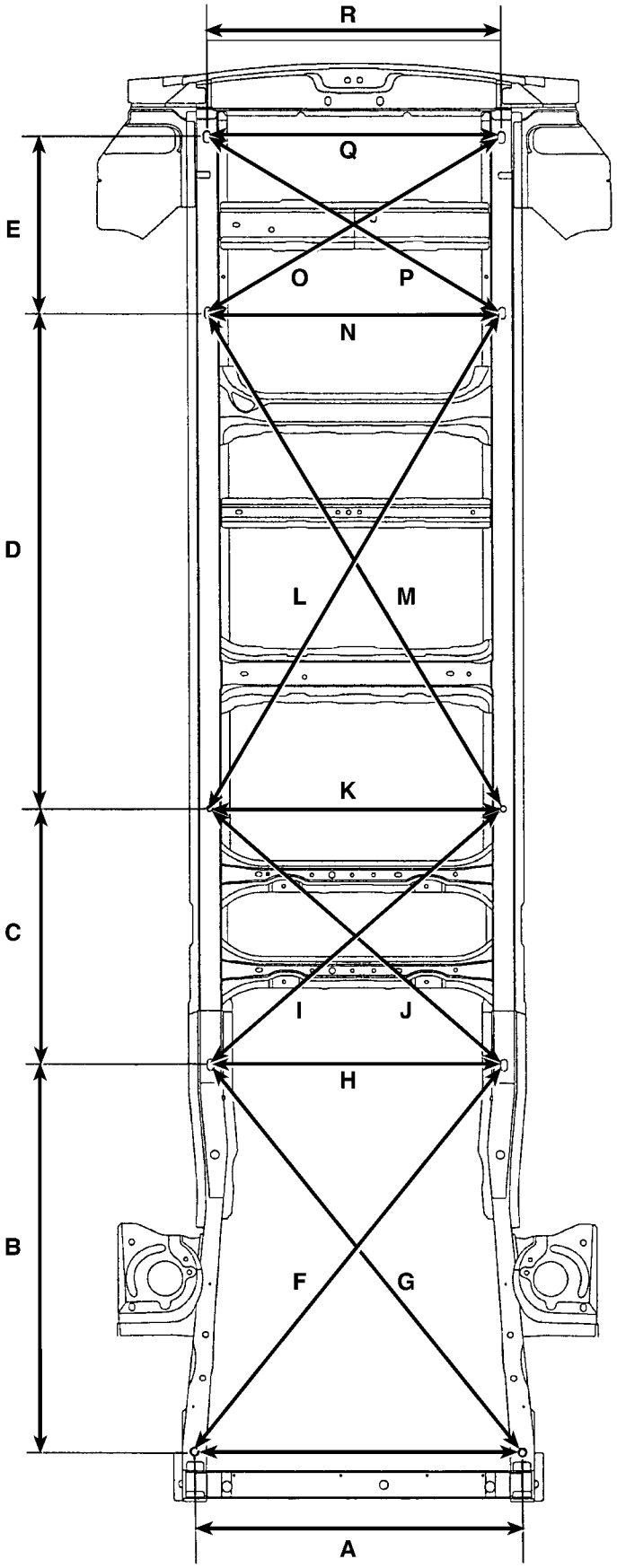

	LONG WHEELBASE	SHORT WHEELBASE
A	1040.00	1040.00
B	1141.09	1141.09
C	949.72	949.72
D	1614.53	1462.55
E	564.65	427.58
F	1509.86	1509.86
G	1509.86	1509.86
H	944.00	944.00
I	1337.66	1337.66
J	1337.66	1337.66
K	944.00	944.00
L	1870.25	1740.76
M	1870.25	1740.76
N	944.00	944.00
O	1099.98	1036.32
P	1099.98	1036.32
Q	944.00	944.00
R	944.00	944.00

A, B, C, D, E, H, K, N, Q, R ARE FROM CENTER OF PLP OR CONSTANT HOLE CENTER.

F, G, J, I, L, M, O, P ARE ALL CROSS MEASURMENTS

ALL DIMENSIONS IN mm

80c62396

Fig. 11 FULL VEHICLE - BOTTOM VIEW

FRAME (Continued)

SPECIFICATIONS - FRAME DIMENSIONS - FOLD-IN-FLOOR SEATS ONLY

INDEX

DESCRIPTION	FIGURE
FRAME - PLAN VIEW	12
FRAME - SIDE VIEW	13

FRAME (Continued)

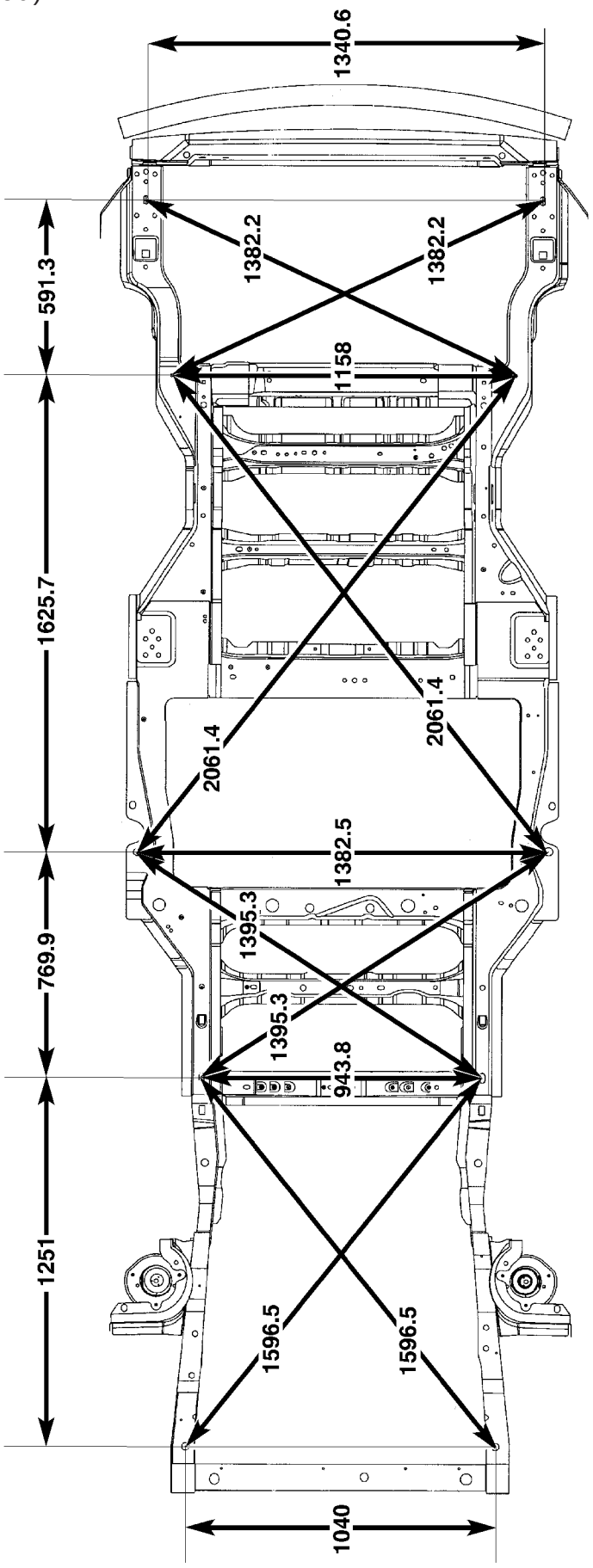

Fig. 12 FRAME - PLAN VIEW

DIMENSIONS ARE FROM CENTER OF PLP OR CONSTANT HOLE CENTER

ALL DIMENSIONS ARE IN MILLIMETERS

FRAME (Continued)

A — CENTER OF UPPER BUMPER REINFORCEMENT BOLT HOLE
B — BOTTOM OF FRONT FRAME RAIL PLP CENTER
C — STRUT TOWER FRONT BOLT HOLE LOWER SURFACE
D — FRONT SUSPENSION CRADLE MOUNT SURFACE
E — REAR SUSPENSION CRADLE MOUNT SURFACE
F — CENTER OF FIRST HOLE ON SIDE MIDDLE TUB
G — CENTER OF HOLE ON FRONT SIDE OF REAR TUB
H — CENTER OF HOLE TOWARD REAR SIDE OF REAR TUB

ALL DIMENSIONS IN MILLIMETERS

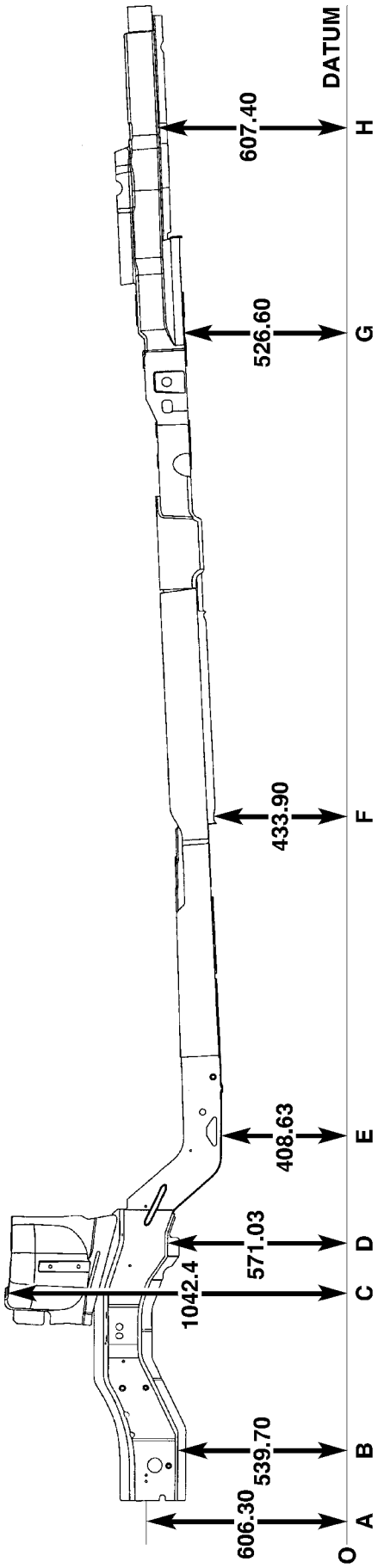

Fig. 13 FRAME - SIDE VIEW

FRAME (Continued)

SPECIFICATIONS - TORQUE

DESCRIPTION	N·m	Ft. Lbs.	In. Lbs.
Front Cradle Crossmember to Fram Rail Attaching Bolts (4)	163	120	—
Reinforcement Plate to Crossmember Attaching Bolt Size M14 (9)	153	113	—
Reinforcement Plate to Crossmember Attaching Bolt Size M12 (1)	106	78	—
Reinforcement Plate to Crossmember Attaching Bolt Size M10 (4)	61	45	—
Rear Engine Mount to Crossmember Attaching Through Bolt	68	50	—
Radiator Support Crossmember Attaching Bolts	51	38	—

FRONT CRADLE CROSSMEMBER

DESCRIPTION

DESCRIPTION - FRONT CRADLE CROSSMEMBER

This vehicle uses a one piece cast aluminum cradle for the front cradle crossmember. The cradle crossmember is used as the attaching points for the lower control arms, stabilizer bar and steering gear. The cradle also has the power steering hoses and the chassis brake tubes attached to it.

WARNING: If a threaded hole in the suspension cradle needs to be repaired, only use the type of thread insert and installation procedure specified for this application.

The threaded holes in the front cradle crossmember that are used for attachment of the lower control arm rear bushing retainer, power steering hose and chassis brake tubes can be repaired. The repair is done by the installation of a Heli-Coil® thread insert which has been specifically developed for this application. Refer to the Mopar Parts Catalog for the specified Heli-Coil® thread insert to be used for this application. The procedure for installing the Heli-Coil® thread insert is detailed in the Service Procedures section in this group of the service manual.

DESCRIPTION - FRONT CRADLE CROSSMEMBER THREAD REPAIR

WARNING: When performing this procedure use only the thread inserts which are specified in the Mopar Parts Catalog for this repair procedure. These thread inserts have been specifically developed for this application and use of other types of thread inserts can result in an inferior long term repair.

The threaded holes in the front cradle crossmember, if damaged, can repaired by installing a Heli-Coil® thread insert.

The threaded holes that are repairable using the thread insert, are the lower control arm rear bushing retainer mounting bolt holes, routing bracket attaching locations for the power steering hoses, and brake hose attachment holes.

This repair procedure now allows the threaded holes in the cradle crossmember to be repaired, eliminating the need to replace the cradle crossmember if damage occurs to one of the threaded holes.

The thread inserts for this application are specified by part number in the Mopar Parts Catalog. **Do not use a substitute thread insert.**

The specific tools and equipment required to install the thread insert are listed below. Refer to the instructions included with the thread insert for the detailed procedure used for the installation of the thread insert.

NOTE: The thread inserts for this application are for the repair of M8x1.25 and M10x1.5 threads. Be sure the correct tools are used for the required thread insert size.

TOOL REQUIREMENT FOR M8x1.25 Thread

- 8.3mm (5/16 in.) Drill Bit
- 120° Countersink
- Heli-Coil® Tap #4863-8
- Heli-Coil® Gage #4624-8
- Heli-Coil® Hand Inserting Tool 7751-8
- Needle Nose Pliers – For Removal Of Thread Insert Driving Tang

TOOL REQUIREMENT FOR M10x1.5 Thread

- 10.5mm (25/64 in.) Drill Bit
- 120° Countersink
- Heli-Coil® Tap #4863-10
- Heli-Coil® Gage #4624-10
- Heli-Coil® Hand Inserting Tool 7751-10
- Needle Nose Pliers – For Removal Of Thread Insert Driving Tang

FRONT CRADLE CROSSMEMBER (Continued)

REMOVAL

The front cradle crossmember must be installed in the design location to achieve proper front end suspension alignment. If the cradle crossmember is removed without applying reference marks on the frame rails, align the cradle crossmember according to the dimensions provided in this group.

NOTE: If the caged nuts in the frame rails become damaged and cannot be reused, a replacement nut can be obtained through Mopar® (Fig. 14).

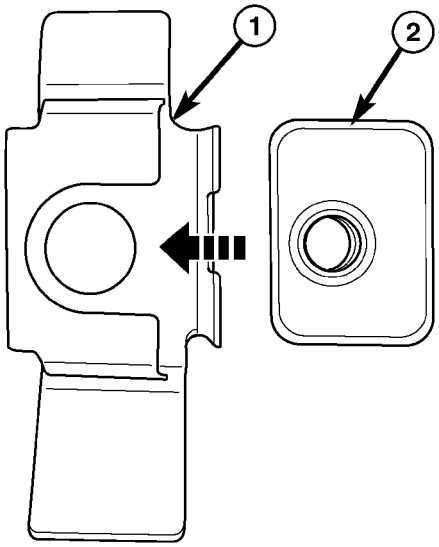

Fig. 14 FRONT CRADLE CROSSMEMBER CAGED NUT

1 - BRACKET
2 - CAGED NUT

REMOVAL

(1) Disconnect battery negative cable.

(2) Remove steering column lower cover from instrument panel (Refer to 23 - BODY/INSTRUMENT PANEL/STEERING COLUMN OPENING COVER - REMOVAL).

(3) Remove steering column cover backing plate (Refer to 23 - BODY/INSTRUMENT PANEL/STEERING COLUMN COVER BACKING PLATE - REMOVAL).

(4) Position steering so front wheels are straight ahead.

CAUTION: Do not rotate steering wheel after disengaging lower coupling from steering gear, damage to air bag clock spring can result.

(5) Remove clinch bolt attaching steering column coupling to steering gear shaft (Fig. 15).

(6) Remove steering column coupling from telescoping steering gear shaft.

(7) Hoist vehicle and support on safety stands.

(8) Position a drain pan under power steering pump and oil return hose coupling.

(9) Using a hose pinch-off pliers (C-4390), pinch power steering oil return hose off between the crossmember coupling and the pump.

(10) Loosen hose clamp at the cradle crossmember coupling.

(11) Disconnect return hose from metal tube.

(12) While holding pressure relief valve nut on back of power steering pump, Remove flare nut attaching high pressure hose to back of pump.

(13) Remove high pressure hose from pump.

(14) Allow power steering fluid to drain into pan.

(15) Remove bolts attaching anti-lock brake sensor leads to cradle crossmember.

(16) Position anti-lock brake leads out of the way.

(17) Disconnect stabilizer bar links from ends of stabilizer bar.

(18) Disconnect lower ball joints from lower steering knuckles (Refer to 2 - SUSPENSION/FRONT/LOWER BALL JOINT - REMOVAL).

(19) Remove the rear engine mount heat shield (Fig. 16).

(20) Remove through bolt attaching rear engine mount to cradle crossmember (Fig. 17).

(21) Using paint or grease pencil, mark outline of cradle crossmember on frame rails to aid installation.

(22) Support cradle crossmember on suitable lifting device (Fig. 19).

(23) Remove bolts attaching crossmember to front frame rails (Fig. 18).

(24) Remove cradle crossmember from vehicle (Fig. 19).

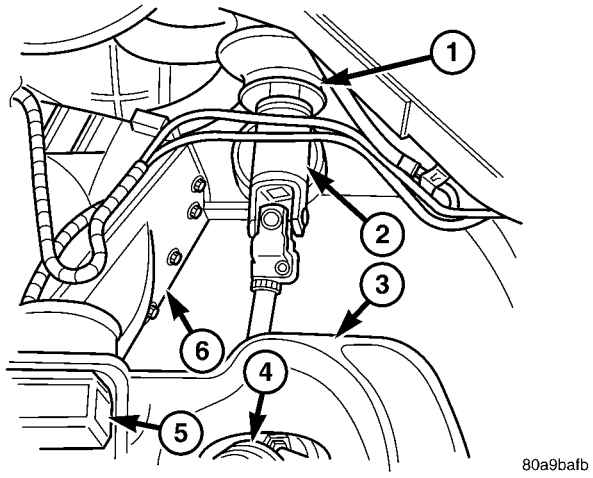

Fig. 15 STEERING COUPLING

1 - STEERING SHAFT BOOT
2 - STEERING SHAFT
3 - CROSSMEMBER
4 - STEERING GEAR
5 - MOUNT
6 - TRANSAXLE

FRONT CRADLE CROSSMEMBER (Continued)

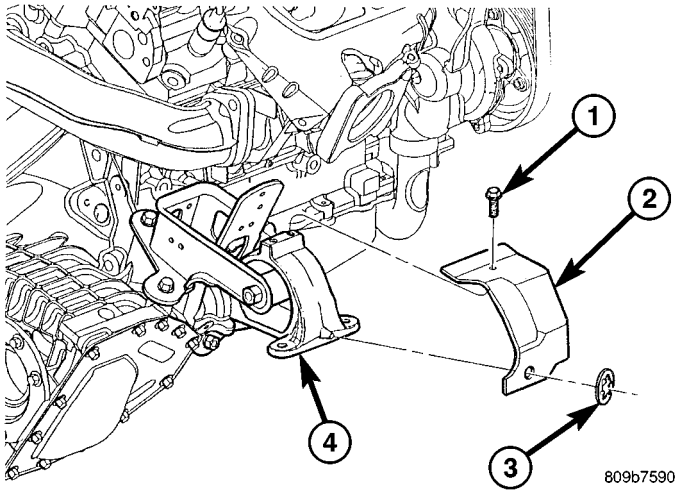

Fig. 16 REAR MOUNT HEAT SHIELD

1 - BOLT
2 - HEAT SHIELD
3 - CLIP
4 - REAR ENGINE MOUNT

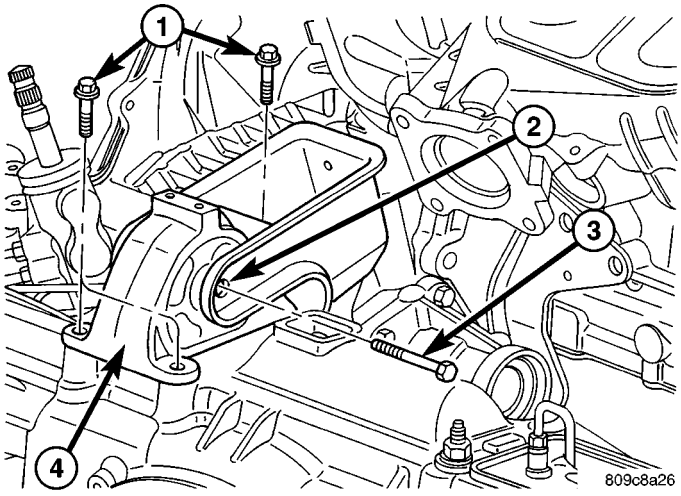

Fig. 17 REAR MOUNT

1 - BOLT
2 - REAR MOUNT BRACKET
3 - THROUGH BOLT
4 - REAR MOUNT

INSTALLATION

NOTE: If cradle crossmember requires replacement. Refer to Group 2, Suspension, to transfer suspension components and Group 19, Steering, to transfer steering components.

(1) Support crossmember on suitable lifting device (Fig. 19).

(2) Position crossmember to vehicle.

(3) Loosely install bolts attaching cradle crossmember to front frame rails.

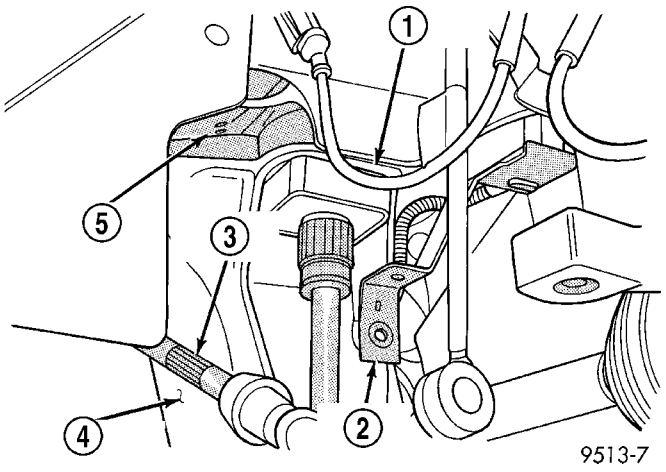

Fig. 18 CRADLE CROSSMEMBER MOUNT

1 - CROSSMEMBER MOUNT
2 - BRAKE HOSE MOUNT
3 - STEERING TIE ROD
4 - FRONT CROSSMEMBER
5 - FRAME RAIL

(4) Place upper half of bushing on top of crossmember aligned to receive square tube protruding upward from lower bushing half.

(5) Align crossmember to previously made marks on frame rails.

(6) Tighten bolts attaching cradle crossmember to frame rails.

(7) Install through bolt attaching rear engine mount to cradle crossmember (Fig. 17) and tighten to 68 N·m (50 ft. lbs.) torque.

(8) Install the rear mount heat shield (Fig. 16).

(9) Connect lower ball joints to steering knuckles (Refer to 2 - SUSPENSION/FRONT/LOWER BALL JOINT - INSTALLATION)

(10) Connect stabilizer bar links to ends of stabilizer bar.

(11) Install bolts attaching anti-lock brake sensor leads to cradle crossmember.

(12) Install high pressure hose to pump.

(13) Connect return hose to metal tube.

(14) Tighten hose clamp at the cradle crossmember coupling.

(15) Remove pinch-off pliers.

(16) Position steering so front wheels are straight ahead.

(17) Install steering column coupling to telescoping steering gear shaft.

(18) Install clinch bolt attaching steering column coupling to steering gear shaft.

(19) Install steering column cover backing plate (Refer to 23 - BODY/INSTRUMENT PANEL/STEERING COLUMN COVER BACKING PLATE - INSTALLATION)

FRONT CRADLE CROSSMEMBER (Continued)

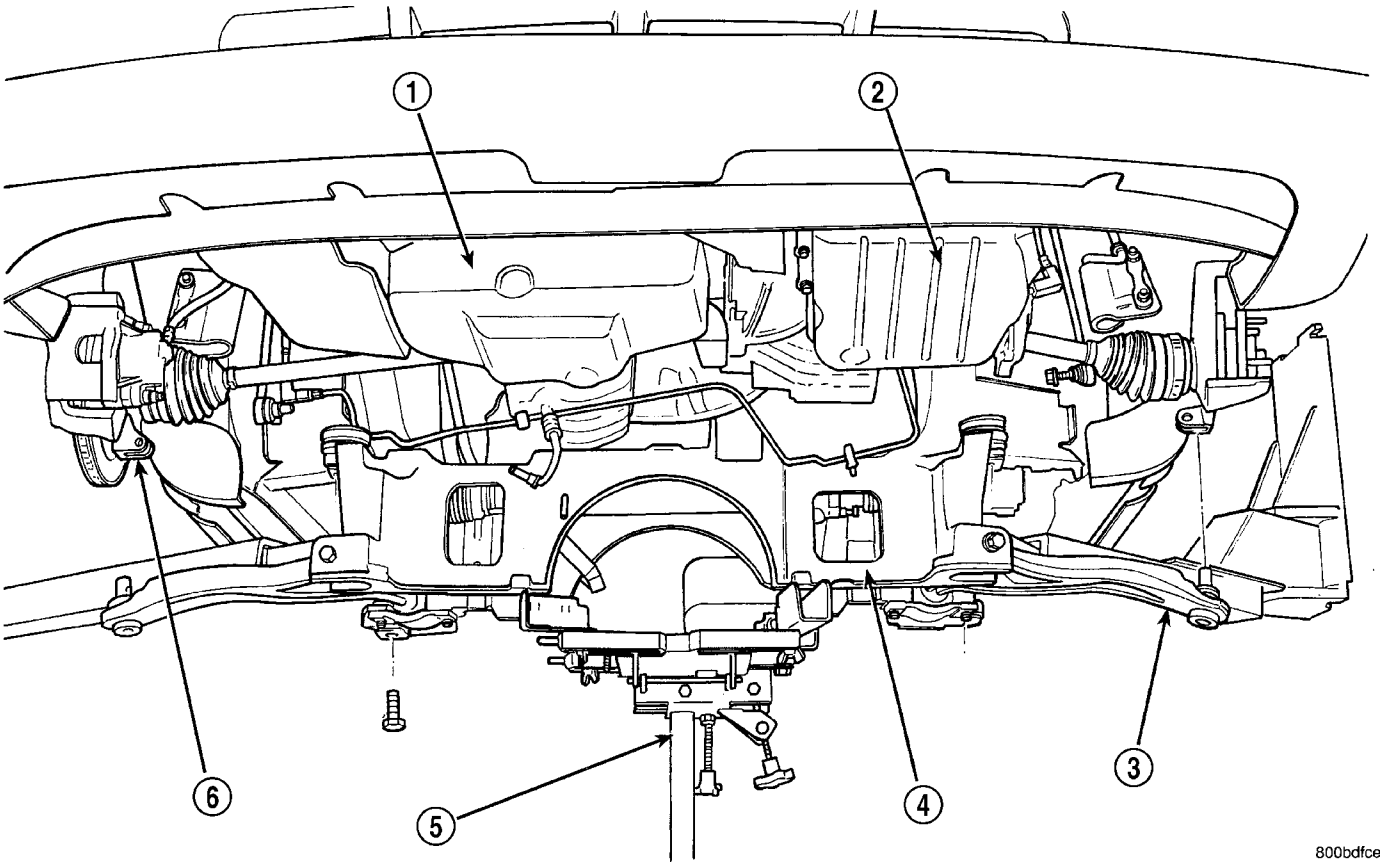

Fig. 19 CRADLE CROSSMEMBER

1 - ENGINE OIL PAN
2 - TRANSAXLE
3 - LOWER CONTROL ARM
4 - FRONT CROSSMEMBER
5 - LIFT DEVICE
6 - SPINDLE

(20) Install steering column lower cover from instrument panel (Refer to 23 - BODY/INSTRUMENT PANEL/STEERING COLUMN OPENING COVER - INSTALLATION).

(21) Connect battery negative cable.

FRONT CROSSMEMBER MOUNT BUSHINGS

REMOVAL

(1) Using paint or grease pencil, mark outline of cradle crossmember on frame rails.

(2) Loosen bolts attaching crossmember to frame rails.

(3) Remove bolt on bushing that requires replacement.

(4) Allow cradle crossmember to drop down enough to gain clearance for bushing removal.

(5) Remove bushing from vehicle.

INSTALLATION

(1) Apply rubber lubrication or soap to replacement bushing.

(2) Insert lower half of bushing into square hole in cradle crossmember.

(3) Place upper half of bushing on top of crossmember aligned to receive square tube protruding upward from lower bushing half.

(4) Squeeze bushing halves together to ensure they are properly mated.

(5) Lift cradle crossmember upward to close gap between the bushing and frame.

(6) Verify that lower bushing is fully seated into cradle crossmember and upper bushing.

(7) Install bolt attaching bushing and crossmember to frame rail hand tight.

(8) Align cradle crossmember to reference marks on frame rails.

(9) Tighten cradle crossmember to frame rails attaching bolts to 163 N·m (120 ft. lbs.) torque.

FUEL SYSTEM

TABLE OF CONTENTS

page

FUEL DELIVERY 1

FUEL INJECTION 21

FUEL DELIVERY

TABLE OF CONTENTS

page

FUEL DELIVERY
- DESCRIPTION
  - DESCRIPTION 2
  - DESCRIPTION - FFV REPLACEMENT PARTS 2
- OPERATION 2
- DIAGNOSIS AND TESTING - FUEL DELIVERY SYSTEM 2
- STANDARD PROCEDURE
  - STANDARD PROCEDURE - FUEL SYSTEM PRESSURE RELEASE PROCEDURE 2
  - STANDARD PROCEDURE - DRAINING FUEL TANK 2
  - STANDARD PROCEDURE - FUEL PRESSURE GAUGE 3
- SPECIFICATIONS
  - FUEL SYSTEM PRESSURE 4
  - TORQUE 4
- SPECIAL TOOLS
  - FUEL 4

FUEL LEVEL SENDING UNIT / SENSOR
- DESCRIPTION 5
- OPERATION 5
- REMOVAL 5
- INSTALLATION 6

FUEL LINES
- DESCRIPTION - FUEL LINES/HOSES AND CLAMPS 7
- STANDARD PROCEDURE - HOSES AND CLAMP 7

FUEL PRESSURE REGULATOR
- OPERATION 7
- REMOVAL 7
- INSTALLATION 7

FUEL PUMP
- DESCRIPTION 8
- OPERATION 8

FUEL PUMP MODULE
- DESCRIPTION 8
- OPERATION 9
- REMOVAL
  - REMOVAL 9
  - REMOVAL - FOLD-IN-FLOOR 10
- INSTALLATION
  - INSTALLATION 10
  - INSTALLATION - FOLD-IN-FLOOR 10

FUEL RAIL
- REMOVAL
  - REMOVAL - 2.4L 11
  - REMOVAL - 3.3/3.8L 11
- INSTALLATION
  - INSTALLATION - 2.4L 11
  - INSTALLATION - 3.3/3.8L 12

FUEL TANK
- DESCRIPTION 12
- OPERATION 12
- REMOVAL
  - REMOVAL 12
  - REMOVAL - FOLD-IN-FLOOR 13
- INSTALLATION
  - INSTALLATION 15
  - INSTALLATION - FOLD-IN-FLOOR 16

FUEL TANK FILLER TUBE
- REMOVAL 16
- INSTALLATION 17

INLET FILTER
- REMOVAL 17
- INSTALLATION 17

QUICK CONNECT FITTING
- STANDARD PROCEDURE - QUICK-CONNECT FITTINGS 18

FUEL DELIVERY

DESCRIPTION

DESCRIPTION

The front wheel drive car uses a plastic fuel tank located rear center of the vehicle.

The Fuel Delivery System consists of: the following items:

- Electric fuel pump module
- Fuel filter
- Tubes/lines/hoses
- Fuel injectors

The in-tank fuel pump module contains the fuel pump. The pump is serviced as part of the fuel pump module. Refer to Fuel Pump Module.

The fuel filter is replaceable only as part of the fuel pump module.

DESCRIPTION - FFV REPLACEMENT PARTS

Many components in a Flexible Fuel Vehicle (FFV) are designed to be compatible with ethanol. Always be sure that the vehicle is serviced with correct ethanol compatible parts.

CAUTION: Replacing fuel system components with non-ethanol compatible components can damage your vehicle and may void the warranty.

OPERATION

The fuel system provides fuel pressure by an in-tank pump module. The Powertrain Control Module (PCM) controls the operation of the fuel system by providing battery voltage to the fuel pump through the fuel pump relay. The PCM requires only three inputs and a good ground to operate the fuel pump relay. The three inputs are:

- Ignition voltage
- Crankshaft Position (CKP) sensor
- Camshaft Position (CMP) sensor

DIAGNOSIS AND TESTING - FUEL DELIVERY SYSTEM

(Refer to Appropriate Diagnostic Information)

STANDARD PROCEDURE

STANDARD PROCEDURE - FUEL SYSTEM PRESSURE RELEASE PROCEDURE

(1) Remove Fuel Pump relay from Power Distribution Center (PDC). For location of relay, refer to label on underside of PDC cover.

(2) Start and run engine until it stalls.

(3) Attempt restarting engine until it will no longer run.

(4) Turn ignition key to OFF position.

(5) Return fuel pump relay to PDC.

(6) One or more Diagnostic Trouble Codes (DTC's) may have been stored in PCM memory due to fuel pump relay removal. The DRB III® scan tool must be used to erase a DTC.

STANDARD PROCEDURE - DRAINING FUEL TANK

Two different procedures may be used to drain fuel tank (lowering tank or using DRBIII® scan tool).

The quickest draining procedure involves lowering the fuel tank.

WARNING: RELEASE FUEL SYSTEM PRESSURE BEFORE SERVICING FUEL SYSTEM COMPONENTS. SERVICE VEHICLES IN WELL VENTILATED AREAS AND AVOID IGNITION SOURCES. NEVER SMOKE WHILE SERVICING THE VEHICLE. THIS MAY RESULT IN PERSONAL INJURY OR DEATH.

As an alternative procedure, the electric fuel pump may be activated allowing tank to be drained at fuel rail connection. Refer to DRBIII® scan tool for fuel pump activation procedures. Before disconnecting fuel line at fuel rail, release fuel pressure. Refer to the Fuel System Pressure Release Procedure in this group for procedures. Disconnect the fuel line at the fuel rail and remove the plastic retainer from the fuel rail. Take plastic retainer and install it back into the fuel line from body. Check the O-ring and make sure that it is in place and not damaged. Attach end of special test hose tool number 6539 at fuel line connection from the body line. Position opposite end of this hose tool to an approved gasoline draining station. Activate fuel pump and drain tank until empty. When done remove the special test hose tool number 6539 from the body line. Remove the plastic retainer from the special test hose tool number 6539 and reinstall it into the fuel line from the body. Check the O-ring and make sure that it is in place and not damaged. Install the fuel line to the fuel rail.

If electric fuel pump is not operating, tank must be lowered for fuel draining. Refer to following procedures.

(1) Remove fuel filler cap.

(2) Perform the Fuel System Pressure Release procedure.

(3) Disconnect negative cable from battery.

(4) Raise vehicle and support.

(5) Certain models are equipped with a separate grounding wire (strap) connecting the fuel fill tube assembly to the body. Disconnect wire by removing screw.

(6) Open fuel fill door and remove screws mounting fuel filler tube assembly to body. Do not disconnect rubber fuel fill or vent hoses from tank at this time.

(7) Place a transmission jack under center of fuel tank. Apply a slight amount of pressure to fuel tank with transmission jack.

(8) Remove fuel tank mounting straps.

(9) **Lower the tank just enough so that the filler tube fitting is the highest point of the fuel tank.**

(10) Remove filler tube from fuel tank. Tank will be drained through this fitting.

NOTE: WRAP SHOP TOWELS AROUND HOSES TO CATCH ANY GASOLINE SPILLAGE.

(11) Drain fuel tank into holding tank or a properly labeled **Gasoline** safety container.

WARNING: GASOLINE OR GASOLINE VAPORS ARE HIGHLY FLAMMABLE. A FIRE COULD OCCUR IF AN IGNITION SOURCE IS PRESENT. NEVER DRAIN OR STORE GASOLINE OR DIESEL FUEL IN AN OPEN CONTAINER, DUE TO THE POSSIBILITY OF FIRE OR EXPLOSION. THIS MAY RESULT IN PERSONAL INJURY OR DEATH.

(12) If fuel pump module removal is necessary, refer to Fuel Pump Module Removal/Installation in this section.

STANDARD PROCEDURE - FUEL PRESSURE GAUGE

This gauge package (special tool #8974) (Fig. 1)is designed to check the injectors or fuel pump for leak down conditions and fuel system pressures. Refer to the Powertrain Diagnostic Manual for more information on the operation of this tool.

(1) Preform the fuel pressure release procedure, refer to the Fuel Pressure release procedure in this section.

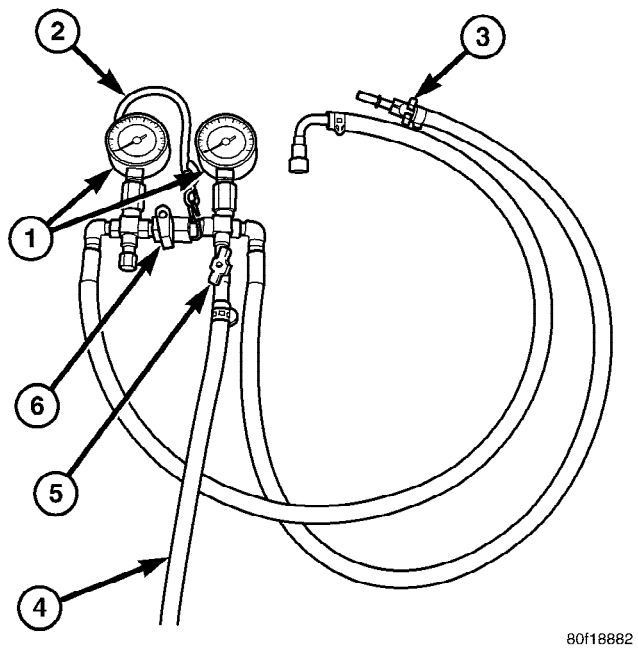

Fig. 1 FUEL SYSTEM PRESSURE TESTER #8978

1 - GAUGES
2 - HANGER
3 - RELEASE TOOL
4 - DRAIN HOSE
5 - DRAIN HOSE VALVE
6 - SHUT-OFF VALVE

(2) Find a fuel line quick connect fitting that is accessible and install special tool #8974.

(3) Refer to the Powertrain Diagnostic Manual for the proper operation of this gauge package.

(4) Preform the fuel pressure release procedure, refer to the Fuel Pressure release procedure in this section.

(5) Remove gauge from fuel system and reconnect fuel lines.

(6) Use the DRBIII® to pressurize the fuel system to check for leaks

FUEL DELIVERY (Continued)

SPECIFICATIONS

FUEL SYSTEM PRESSURE

400 kpa ±34 kpa (58 psi ± 5 psi)

TORQUE

DESCRIPTION	N·m	Ft. Lbs.	In. Lbs.
Fuel Filler Neck Clamp	3.3		30
Fuel Rail 2.4L	22		195
Fuel Rail 3.3/3.8L	11.8		105
Fuel Tank Strap	54	40	
Fuel Tank T Strap	28.2		250
Fuel Filter Bolt	4.5		40

SPECIAL TOOLS

FUEL

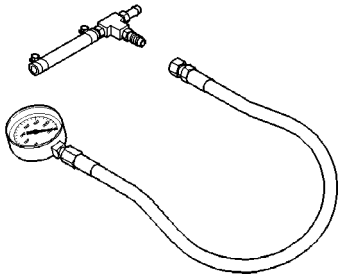

Pressure Gauge Assembly C–4799–B

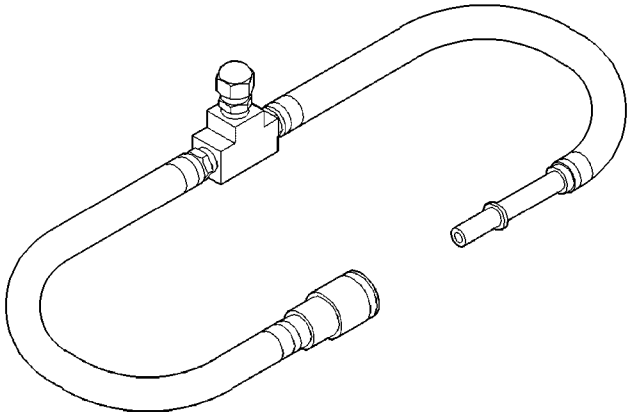

Fuel Pressure Test Adapter 6539

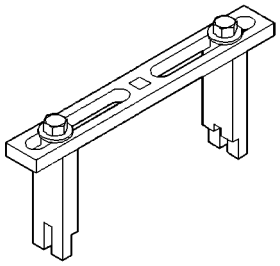

Spanner Wrench 6856

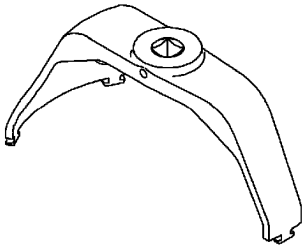

LOCKRING REMOVER/INSTALLER #9340

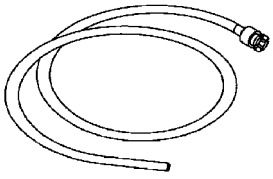

Fuel Line Adapter 1/4

FUEL DELIVERY (Continued)

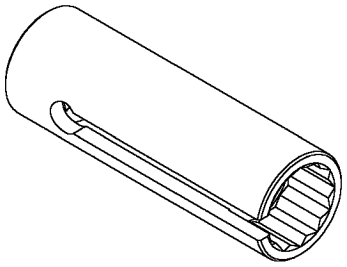

O2S (Oxygen Sensor) Remover/Installer—C-4907

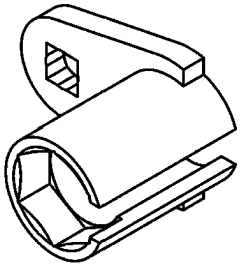

O2S (Oxygen Sensor) Remover/Installer - 8439

FUEL LEVEL SENDING UNIT / SENSOR

DESCRIPTION

The fuel gauge level sending unit is attached to the side of fuel pump module. The level sensor is a variable resistor.

OPERATION

Its resistance changes with the amount of fuel in the tank. The float arm attached to the sensor moves as the fuel level changes.

The fuel level input is used as an input for OBD II. If the fuel level is below 15% or above 85% of total tank capacity several monitors are disabled. There are diagnostics for the level circuit open and shorted.

REMOVAL

Remove fuel pump module. Refer to Fuel Pump Module in this section.

(1) Depress retaining tab and remove the fuel pump/level sensor connector from the **BOTTOM** of the fuel pump module electrical connector (Fig. 2).

NOTE: The pump module harness on TOP of flange is not serviceable or removable.

(2) Pull off the locking wedge.

(3) Using a small screwdriver lift locking finger away from terminal and push terminal out of connector (Fig. 3).

(4) Push level sensor signal and ground terminals out of the connector (Fig. 4).

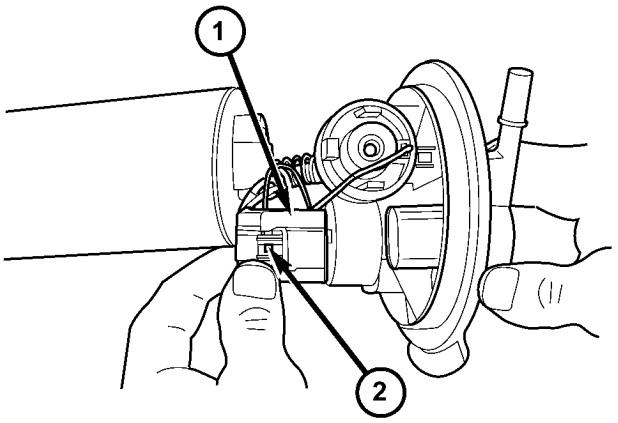

8121efcd

Fig. 2 Fuel Pump/Level Sensor Electrical Connector

1 - ELECTRICAL CONNECTOR
2 - RETAINING TAB

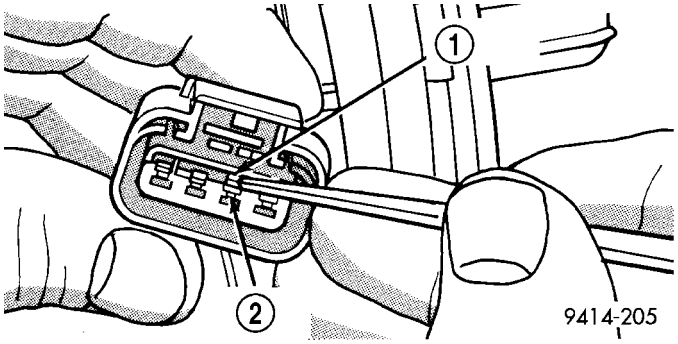

Fig. 3 Wire Terminal Locking Finger

1 - LOCKING FINGER
2 - WIRE TERMINAL

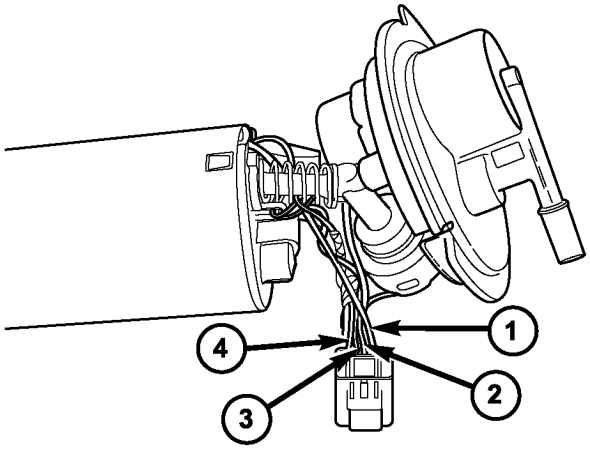

8121f010

Fig. 4 Removing Wires From

1 - FUEL PUMP FEED (RED B+)
2 - LEVEL SENSOR SIGNAL
3 - LEVEL SENSOR GROUND
4 - FUEL PUMP GROUND (BK)

FUEL LEVEL SENDING UNIT / SENSOR (Continued)

(5) Insert a screwdriver between the fuel pump module and the top of the level sensor housing (Fig. 5). Push level sensor down slightly.

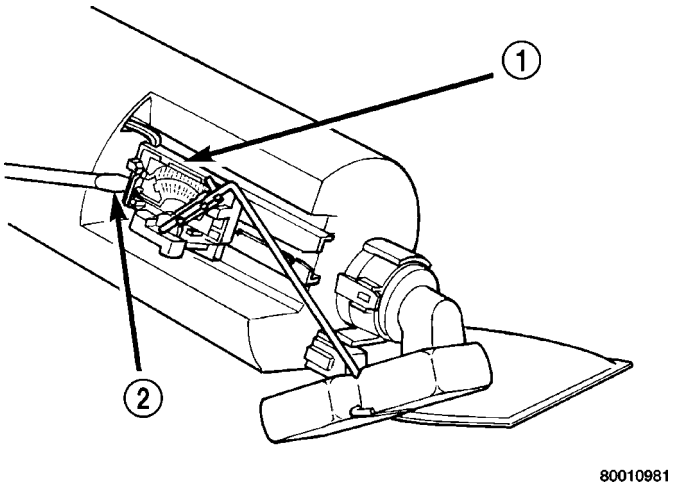

Fig. 5 Loosening Level Sensor

1 - LEVEL SENSOR
2 - PRY DOWN ON LEVEL SENSOR

(6) Slide level sensor wires through opening fuel pump module (Fig. 6).

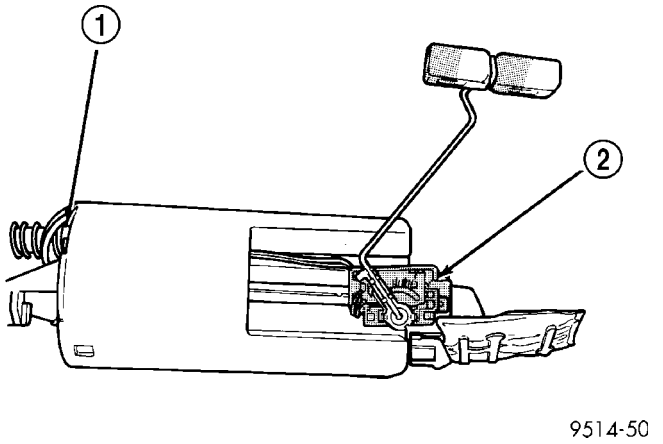

Fig. 6 Level Sensor Removal/Installation

1 - OPENING IN MODULE
2 - FUEL LEVEL SENSOR

(7) Slide level sensor out of installation channel in module.

INSTALLATION

(1) Insert level sensor wires into bottom of opening in module.

(2) Wrap wires into groove in back of level sensor (Fig. 7).

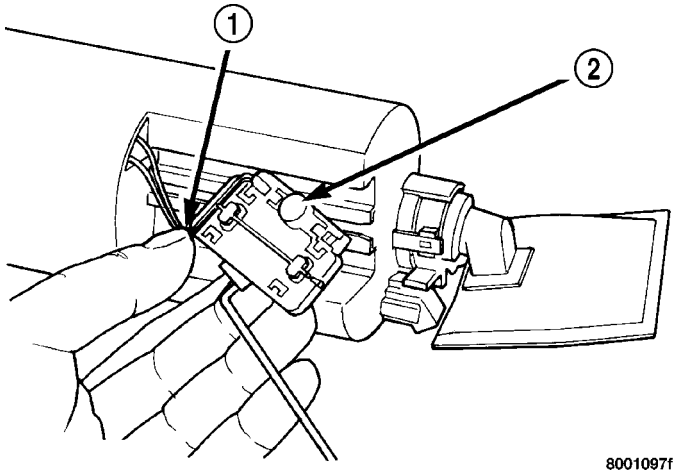

Fig. 7 Groove in Back Side of Level Sensor

1 - WRAP WIRES IN GROOVE
2 - REAR VIEW OF LEVEL SENSOR

(3) While feeding wires into guide grooves, slide level sensor up into channel until it snaps into place (Fig. 8). Ensure tab at bottom of sensor locks in place.

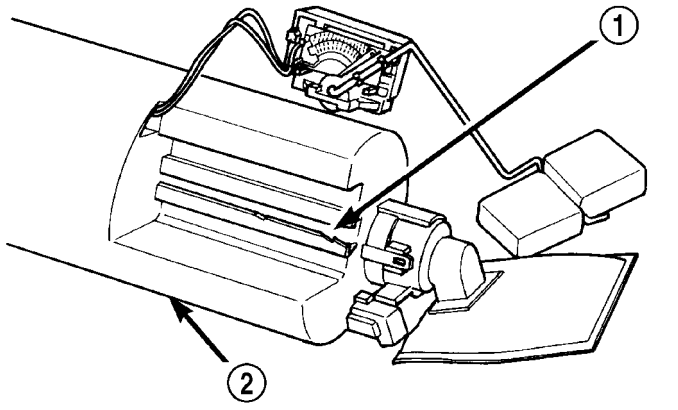

Fig. 8 Installation Channel

1 - CHANNEL FOR LEVEL SENSOR
2 - PUMP MODULE

(4) Install level sensor wires in connector. Push the wires up through the connector and then pull them down until they lock in place. Ensure signal and ground wires are installed in the correct position.

(5) Install locking wedge on connector.

(6) Push connector up into bottom of fuel pump module electrical connector.

(7) Install fuel pump module. Refer to Fuel Pump Module in this section.

FUEL LINES

DESCRIPTION - FUEL LINES/HOSES AND CLAMPS

Also refer to Quick-Connect Fittings.

WARNING: THE FUEL SYSTEM IS UNDER A CONSTANT PRESSURE (EVEN WITH THE ENGINE OFF). BEFORE SERVICING ANY FUEL SYSTEM HOSES, FITTINGS OR LINES, THE FUEL SYSTEM PRESSURE MUST BE RELEASED. REFER TO THE FUEL SYSTEM PRESSURE RELEASE PROCEDURE IN THIS GROUP. THIS MAY RESULT IN PERSONAL INJURY OR DEATH.

The lines/tubes/hoses used on fuel injected vehicles are of a special construction. This is due to the higher fuel pressures and the possibility of contaminated fuel in this system. If it is necessary to replace these lines/tubes/hoses, use new original equipment lines/tubes/hoses.

If equipped: The hose clamps used to secure rubber hoses on vehicles are of a special rolled edge construction. This construction is used to prevent the edge of the clamp from cutting into the hose. Only these rolled edge type clamps may be used in this system. All other types of clamps may cut into the hoses and cause leaks.

Use new original equipment type hose clamps.

STANDARD PROCEDURE - HOSES AND CLAMP

Inspect all hose connections (clamps and quick connect fittings) for completeness and leaks. Replace cracked, scuffed, or swelled hoses. Replace hoses that rub against other vehicle components or show sign of wear.

Fuel injected vehicles use specially constructed hoses. When replacing hoses, only use hoses marked EFM/EFI.

When installing hoses, ensure that they are routed away from contact with other vehicle components that could rub against them and cause failure. Avoid contact with clamps or other components that cause abrasions or scuffing. Ensure that rubber hoses are properly routed and avoid heat sources.

The hose clamps have rolled edges to prevent the clamp from cutting into the hose. Only use clamps that are original equipment or equivalent. Other types of clamps may cut into the hoses and cause high pressure fuel leaks. Tighten hose clamps to 1 N·m (9 in. lbs.) torque.

Inspect all hose connections such as clamps, couplings and fittings to make sure they are secure and leaks are not present. The component should be replaced immediately if there is any evidence of degradation that could result in failure.

Never attempt to repair a plastic fuel line/tube. Replace as necessary.

Avoid contact of any fuel tubes/hoses with other vehicle components that could cause abrasions or scuffing. Be sure that the plastic fuel lines/tubes are properly routed to prevent pinching and to avoid heat sources.

FUEL PRESSURE REGULATOR

OPERATION

The fuel system uses a nonadjustable pressure regulator that maintains fuel system pressure at approximately 400 ±34 kPa (58 ±5 psi). The fuel pressure regulator contains a diaphragm, calibrated spring and a fuel return valve. The spring pushes down on the diaphragm and closes off the fuel return port. System fuel pressure reflects the amount of fuel pressure required to open the return port.

The pressure regulator is a mechanical device that is NOT controlled by the PCM or engine vacuum.

REMOVAL

The fuel pressure regulator is part of the fuel pump module (Fig. 9). Remove the fuel pump module from the fuel tank to access the fuel pressure regulator. Refer to the Fuel Pump Module removal in this section.

(1) Squeeze tangs on pressure regulator retainer and pull to remove retainer.

(2) Pry fuel pressure regulator out of housing.

(3) Ensure both upper and lower O-rings were removed with regulator.

INSTALLATION

The fuel pressure regulator is part of the fuel pump module. Remove the fuel pump module from the fuel tank to access the fuel pressure regulator. Refer to the Fuel Pump Module removal in this section.

FUEL PRESSURE REGULATOR (Continued)

(1) Lightly lubricate the O-rings with clean engine oil and place them into opening in pump module (Fig. 9).
(2) Push regulator into opening in pump module.
(3) Retaining tabs snap into housing.

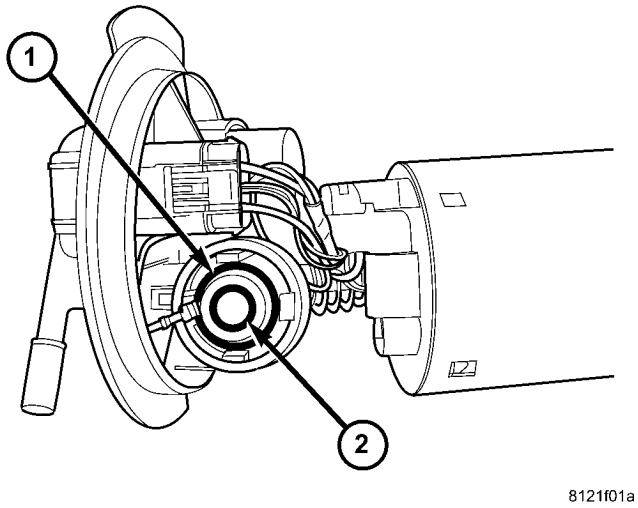

Fig. 9 Fuel Pressure Regulator O-rings

1 - UPPER O-RING
2 - LOWER 0-RING

FUEL PUMP

DESCRIPTION

The electric fuel pump is located in and is part of the fuel pump module. It is a positive displacement, gerotor type, immersible pump with a permanent magnet electric motor. The fuel pump module is suspended in fuel in the fuel tank.

OPERATION

The pump draws fuel through a strainer and pushes it through the motor to the outlet. The pump contains a check valve. The valve, in the pump outlet, maintains pump pressure during engine off conditions, for a short while. It is normal for fuel pressure to drop to zero after cooldown. The fuel pump relay provides voltage to the fuel pump. The fuel pump has a maximum deadheaded pressure output of approximately 880 kPa (130 psi). The regulator adjusts fuel system pressure to approximately 400 kpa ±34 kpa (58 psi ± 5 psi).

FUEL PUMP MODULE

DESCRIPTION

The fuel pump module is installed in the top of the fuel tank (Fig. 10), (Fig. 11), and (Fig. 12).

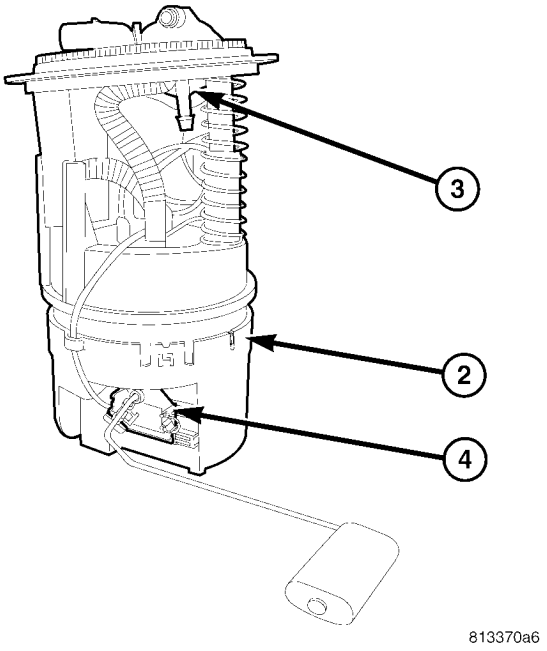

Fig. 10 LEVEL SENSOR - FOLD-IN-FLOOR

2 - FUEL PUMP MODULE
3 - PRESSURE REGULATOR
4 - FUEL LEVEL SENDER

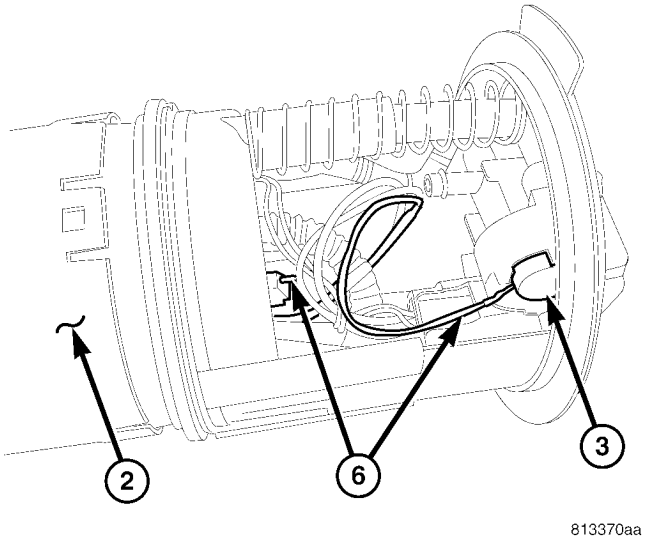

Fig. 11 REGULATOR AND WIRING - FOLD-IN-FLOOR

2 - FUEL RESERVOIR
3 - PRESSURE REGULATOR
6 - GROUND STRAPS

The fuel pump module contains the following:

- Electric fuel pump
- Fuel pump reservoir
- Inlet strainer
- Fuel pressure regulator
- Fuel gauge sending unit

FUEL PUMP MODULE (Continued)

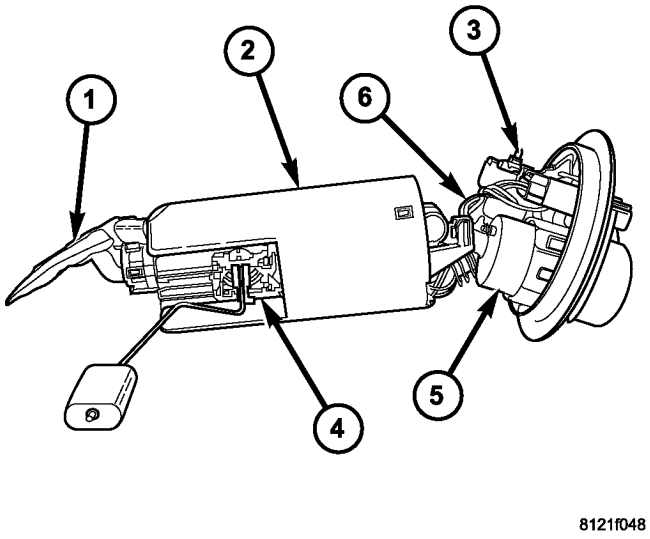

Fig. 12 FUEL PUMP MODULE — NON FOLD-IN-FLOOR

1 - INLET STRAINER
2 - FUEL RESERVOIR
3 - FUEL PRESSURE REGULATOR
4 - FUEL LEVEL SENSOR
5 - FILTER
6 - GROUND STRAPS

- Fuel supply line connection

The inlet strainer, fuel pressure regulator and fuel level sensor are the only serviceable items. If the fuel pump or electrical wiring harness requires service, replace the fuel pump module.

The electric fuel pump is located in and is part of the fuel pump module. It is a positive displacement, gerotor type, immersible pump with a permanent magnet electric motor.

OPERATION

The pump draws fuel through a strainer and pushes it through the motor to the outlet. The pump contains one check valve. The check valve, in the pump outlet, maintains pump pressure during engine off conditions. The fuel pump relay provides voltage to the fuel pump.

The fuel pump has a maximum deadheaded pressure output of approximately 880 kPa (130 psi). The regulator adjusts fuel system pressure to approximately 400 ±34 kPa (58 ±5 psi).

FUEL PUMP ELECTRICAL CONTROL

Voltage to operate the electric pump is supplied through the fuel pump relay. For an electrical operational description of the fuel pump refer to fuel Pump Relay—PCM Output.

ELECTRICAL PUMP REPLACEMENT

The electric fuel pump is not serviceable. If the fuel pump or electrical wiring harness needs replacement, the complete fuel pump module must be replaced. Perform the Fuel System Pressure Release procedure before servicing the fuel pump.

REMOVAL

REMOVAL

WARNING: RELEASE FUEL SYSTEM PRESSURE BEFORE SERVICING FUEL SYSTEM COMPONENTS. SERVICE VEHICLES IN WELL VENTILATED AREAS AND AVOID IGNITION SOURCES. NEVER SMOKE WHILE SERVICING THE VEHICLE.

(1) Remove fuel filler cap and perform Fuel System Pressure Release procedure.

(2) Disconnect negative cable from auxiliary jumper terminal.

(3) Drain fuel tank, refer to the Fuel Tank procedure in the Fuel Delivery section.

(4) Remove fuel tank, refer to the Fuel Tank removal section.

(5) Clean top of tank to remove loose dirt and debris.

(6) Using a brass punch and hammer remove locknut to release pump module (Fig. 13).

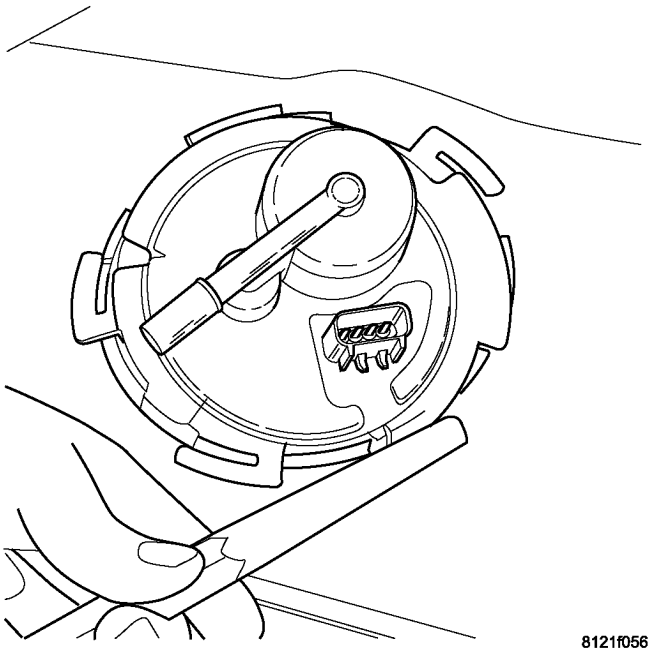

Fig. 13 FUEL PUMP MODULE LOCKING RING

FUEL PUMP MODULE (Continued)

WARNING: THE FUEL RESERVOIR OF THE FUEL PUMP MODULE DOES NOT EMPTY OUT WHEN THE TANK IS DRAINED. THE FUEL IN THE RESERVOIR MAY SPILL OUT WHEN THE MODULE IS REMOVED.

(7) Remove fuel pump module and O-ring from tank (Fig. 14). Discard O-ring.

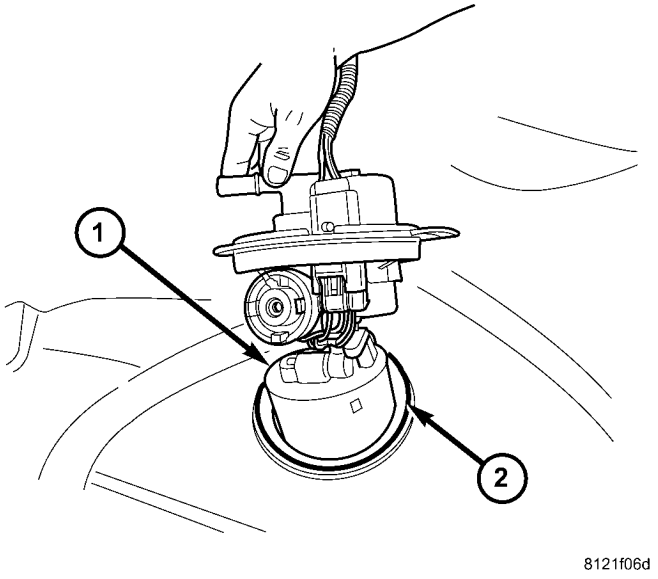

Fig. 14 Fuel Pump Module Removal

1 - FUEL PUMP MODULE
2 - O-RING

REMOVAL - FOLD-IN-FLOOR

WARNING: RELEASE FUEL SYSTEM PRESSURE BEFORE SERVICING FUEL SYSTEM COMPONENTS. SERVICE VEHICLES IN WELL VENTILATED AREAS AND AVOID IGNITION SOURCES. NEVER SMOKE WHILE SERVICING THE VEHICLE.

(1) Remove fuel filler cap and perform Fuel System Pressure Release procedure.
(2) Disconnect negative cable.
(3) Drain fuel tank, refer to the Fuel Tank procedure in the Fuel Delivery section.
(4) Remove fuel tank, refer to the Fuel Tank removal section.
(5) Use tool #9340 to remove the fuel pump module lock ring (Fig. 15).

WARNING: THE FUEL RESERVOIR OF THE FUEL PUMP MODULE DOES NOT EMPTY OUT WHEN THE TANK IS DRAINED. THE FUEL IN THE RESERVOIR MAY SPILL OUT WHEN THE MODULE IS REMOVED.

(6) Remove fuel pump module and O-ring from tank. Discard O-ring.

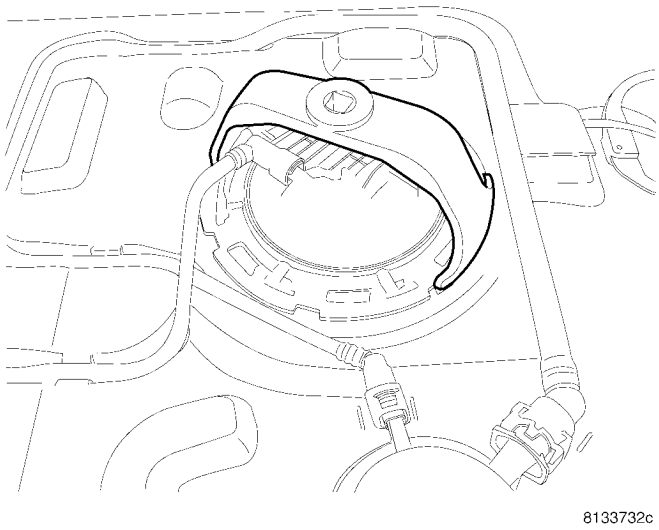

Fig. 15 MODULE LOCK RING NSE

INSTALLATION

INSTALLATION

NOTE: Be careful not to allow dirt/debris to fall into the fuel tank.

(1) Wipe seal area of tank clean and place a new O-ring seal in position on pump.
(2) Position fuel pump module in tank.
(3) Tighten lockring using a brass punch and hammer to install the lockring (Fig. 13).
(4) Install fuel tank, refer to the Fuel Tank installation section.
(5) Lower vehicle.
(6) Connect negative cable battery.
(7) Fill fuel tank. Use the DRB III® scan tool to pressurize the fuel system. Check for leaks.
(8) Install fuel filler cap.

INSTALLATION - FOLD-IN-FLOOR

NOTE: Be careful not to allow dirt/debris to fall into the fuel tank.

(1) Wipe seal area of tank clean and place a new O-ring seal in position on pump.
(2) Position fuel pump module in tank.
(3) Tighten lockring using special tool #9340 to install the lockring (Fig. 15).
(4) Install fuel tank, refer to the Fuel Tank installation section.
(5) Lower vehicle.
(6) Connect negative cable battery.
(7) Fill fuel tank. Use the DRB III® scan tool to pressurize the fuel system. Check for leaks.
(8) Install fuel filler cap.

FUEL RAIL

REMOVAL

REMOVAL - 2.4L

(1) Perform fuel system pressure release procedure **before servicing or starting repairs.** Refer to Fuel System Pressure Release Procedure in this section.

(2) Disconnect negative cable from battery.

(3) Disconnect the wiring connectors for fuel injectors harness (Fig. 16).

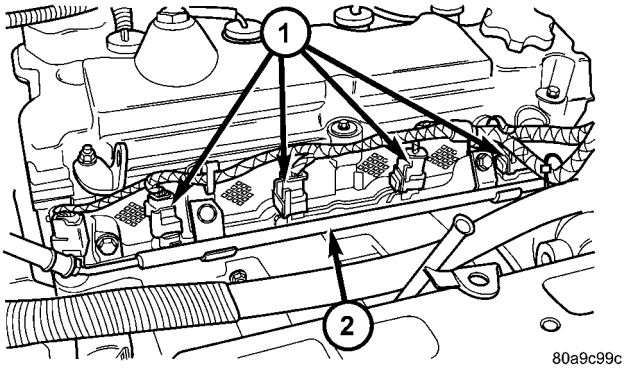

Fig. 16 FUEL RAIL AND INJECTORS 2.4L

1 - Fuel Injectors
2 - Fuel Rail

(4) Remove wiring harness from brackets.

(5) Disconnect the connectors from the fuel injectors.

(6) Remove harness from vehicle.

(7) Remove fuel hose quick connect fitting from the chassis tube. **Refer to Fuel Hoses, Clamps and Quick Connect Fittings in this Section.** Place a shop towel under the connections to absorb any fuel spilled from the fitting.

WARNING: WRAP A SHOP TOWEL AROUND HOSES TO CATCH ANY GASOLINE SPILLAGE.

(8) Remove fuel rail attaching bolts.

(9) Remove fuel rail. Be careful not to damage the injector O-rings upon removal from their ports.

REMOVAL - 3.3/3.8L

(1) Perform fuel system pressure release procedure **before servicing or starting repairs.** Refer to Fuel System Pressure Release Procedure in this section.

(2) Disconnect negative cable from battery.

(3) Remove upper intake manifold, refer to the Engine/Manifolds/Upper Intake for more information..

(4) Cover intake manifold with suitable cover when servicing.

(5) Remove the fuel hose quick connect fitting from the chassis tube. **Refer to Fuel Hoses, Clamps and Quick Connect Fittings in this Section.**

WARNING: WRAP A SHOP TOWEL AROUND HOSES TO CATCH ANY GASOLINE SPILLAGE.

(6) Remove the fuel rail attaching bolts (Fig. 17).

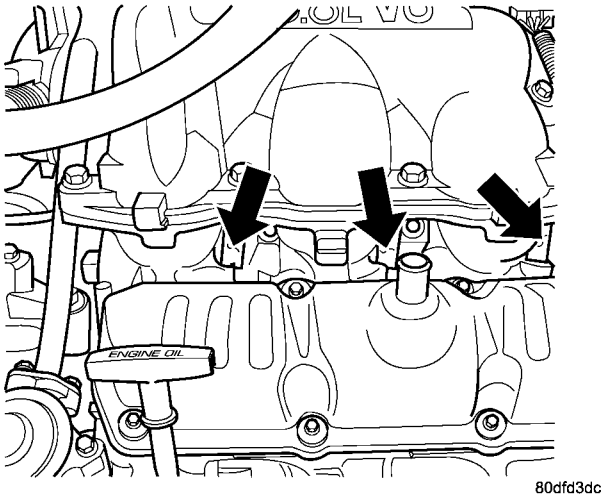

Fig. 17 FUEL INJECTORS 3.3/3.8L

(7) Remove fuel rail. Be careful not to damage the injector O-rings upon removal from their ports.

INSTALLATION

INSTALLATION - 2.4L

(1) Ensure injector holes are clean. Replace O-rings if damaged.

(2) Lubricate injector O-rings with a drop of clean engine oil to ease installation.

(3) Put the tip of each injector into their ports. Push the assembly into place until the injectors are seated in the ports.

(4) Install the fuel rail mounting bolts. Tighten bolts to 22 N·m (200 in. lbs.) torque.

(5) Connect the connectors to the fuel injectors.

(6) Install wiring harness to brackets.

(7) Connect the wiring connectors to fuel injectors harness (Fig. 16).

(8) Connect negative battery cable.

(9) Use the DRBIII® scan tool to pressurize the fuel system. Check for leaks.

FUEL RAIL (Continued)

INSTALLATION - 3.3/3.8L

(1) Ensure injector holes are clean. Replace O-rings if damaged.

(2) Lubricate injector O-rings with a drop of clean engine oil to ease installation.

(3) Put the tip of each injector into their ports. Push the assembly into place until the injectors are seated in the ports.

(4) Install the fuel rail mounting bolts. Tighten bolts to 22 N·m (200 in. lbs.) torque.

(5) Remove covering on lower intake manifold and clean surface.

(6) Install the Upper Intake Manifold, refer to Engine/Manifolds/Upper Intake for more information.

(7) Install fuel hose quick connector fitting to chassis tubes. **Refer to Fuel Hoses, Clamps and Quick Connect Fittings in this Section.** Push the fitting onto the chassis tube until it clicks into place. Pull on the fitting to ensure complete insertion.

(8) Connect negative cable to battery.

(9) Use the DRBIII® scan tool to pressurize the fuel system. Check for leaks.

FUEL TANK

DESCRIPTION

The fuel tank is constructed of a plastic material. Its main functions are for fuel storage and for placement of the fuel pump module. The tank is made from High density Polyethylene (HDPE) material.If equipped with ORVR (Onboard Refueling Vapor Recovery) it has been added to the fuel tank to control refueling vapor emissions.

OPERATION

All models pass a full 360 degree rollover test without fuel leakage. To accomplish this, fuel and vapor flow controls are required for all fuel tank connections.

All models are equipped with either one or two check valves mounted into the top of the fuel tank (or pump module).

An evaporation control system is connected to the check valve(s)/control valve(Refer to 25 - EMISSIONS CONTROL/EVAPORATIVE EMISSIONS/ ORVR - OPERATION) to reduce emissions of fuel vapors into the atmosphere, when the tank is vented due to vapor expansion in the tank. When fuel evaporates from the fuel tank, vapors pass through vent hoses or tubes to a charcoal canister where they are temporarily held. When the engine is running, the vapors are drawn into the intake manifold. In addition, fuel vapors produced during vehicle refueling are allowed to pass through the vent hoses/tubes to the charcoal canister(s) for temporary storage (prior to being drawn into the intake manifold). All models are equipped with a self-diagnosing system using a Leak Detection Pump (LDP) or Natural Vacuum Leak Detection (NVLD). Refer to the Emission Control System for additional information.

INLET CHECK VALVE

All vehicles have an inlet check valve on the inside of the fuel tank at the filler inlet

The valve prevents fuel from splashing back on customer during vehicle refueling. The valve is a non-serviceable item.

REMOVAL

REMOVAL

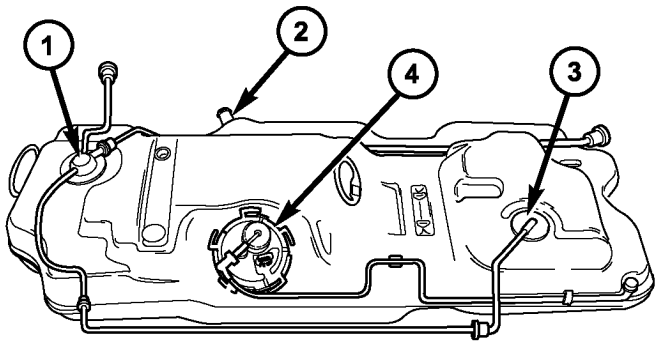

8121f076

Fig. 18 Fuel Tank

1 - ROLLOVER VALVE
2 - FUEL FILLER INLET
3 - ROLLOVER VALVE
4 - FUEL PUMP MODULE

(1) Remove fuel filler cap and perform Fuel System Pressure Release procedure (Fig. 18).

(2) Disconnect negative cable from battery.

(3) Insert fuel siphon hose into fuel filler neck and push it into the tank.

(4) Drain fuel tank dry into holding tank or a properly labeled **GASOLINE** safety container.

(5) Raise vehicle on hoist and support.

(6) Use a transmission jack to support fuel tank. Remove bolts from fuel tank straps.

(7) Lower tank slightly.

(8) Disconnect the fuel filler vent tube. Squeeze tabs and pull apart (Fig. 19).

FUEL TANK (Continued)

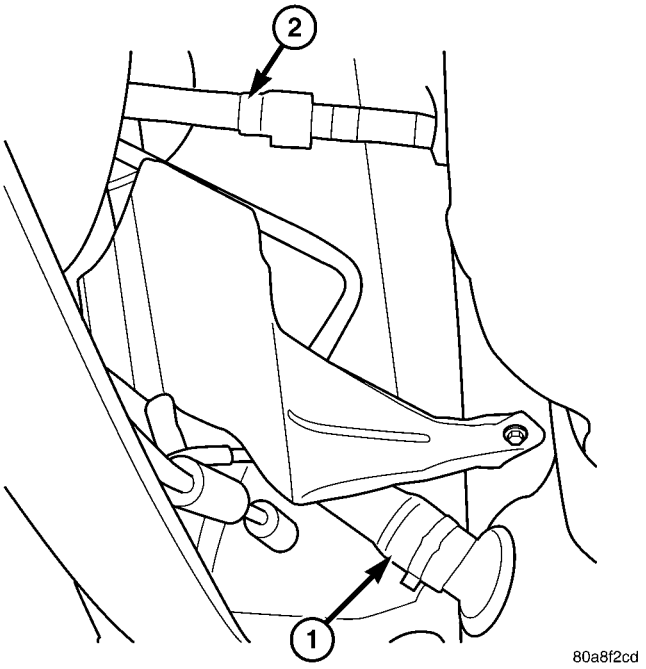

Fig. 19 FUEL FILLER AND VENT TUBE

1 - Filler Tube
2 - Vent Tube

(9) Disconnect the fuel fill hose at the fuel tank filler metal tube **NOT AT THE FUEL TANK** (Fig. 19).

(10) Disconnect fuel line and vapor line at the front of the fuel tank.

The fuel pump module electrical connector has a retainer that locks it in place.

(11) Slide fuel pump module electrical connector lock to unlock.

(12) Push down on connector retainer (Fig. 20) and pull connector off module.

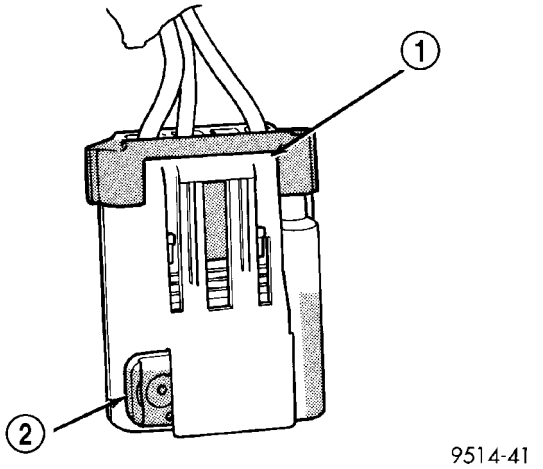

Fig. 20 Pump Module Connector Retainer and Lock

1 - PUSH DOWN ON RETAINER
2 - CONNECTOR LOCK

(13) Lower tank from vehicle. Remove fuel filler vent tube from frame (Fig. 21).

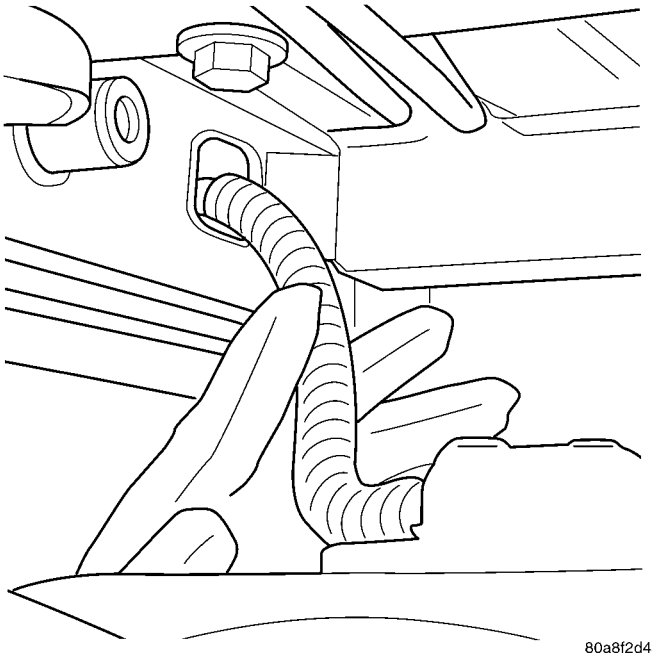

Fig. 21 VENT HOSE

REMOVAL - FOLD-IN-FLOOR

(1) Remove fuel filler cap and perform Fuel System Pressure Release procedure.

(2) Disconnect negative cable from battery.

(3) Drain fuel tank dry into holding tank or a properly labeled **GASOLINE** safety container.

(4) Raise vehicle on hoist and support (Fig. 22).

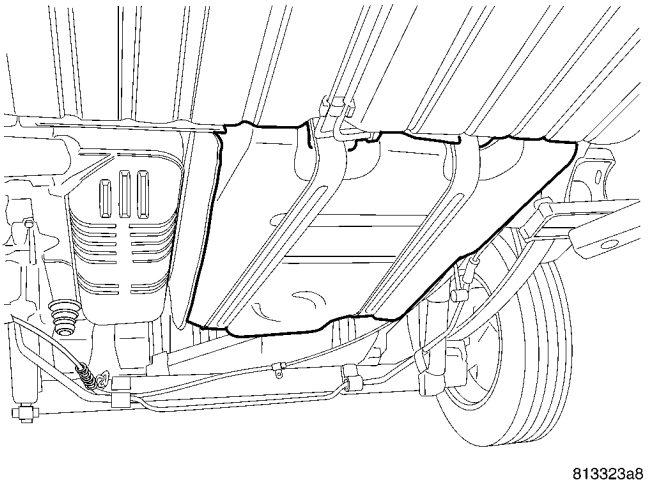

Fig. 22 FUEL TANK IN VEHICLE

FUEL TANK (Continued)

(5) Use a transmission jack to support fuel tank. Remove bolts from fuel tank straps (Fig. 23).

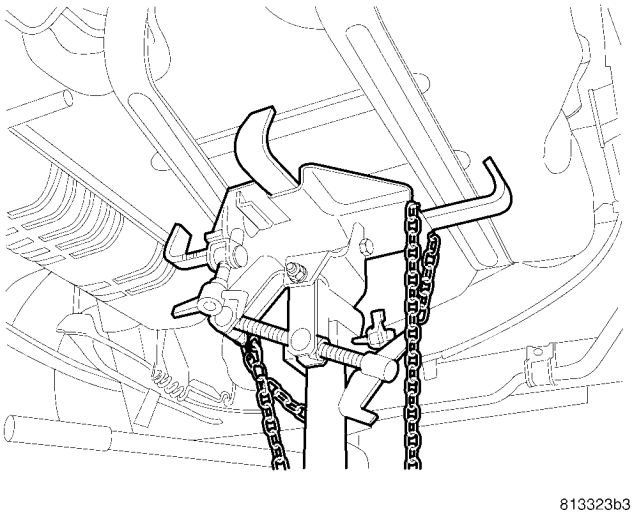

Fig. 23 TRANS JACK

(6) Disconnect the fuel filler vent tube. Squeeze tabs and pull apart (Fig. 24).

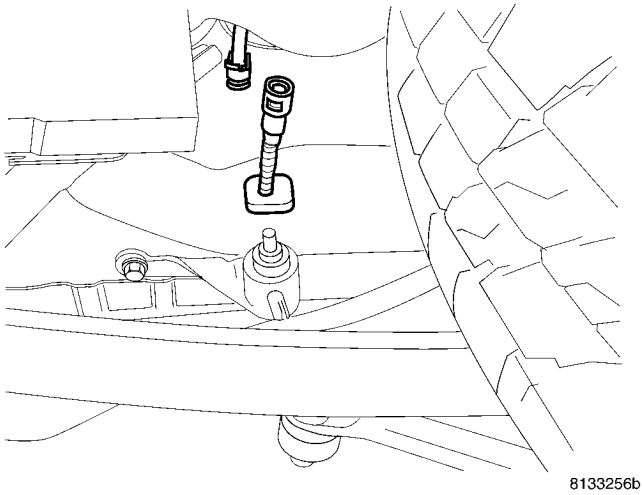

Fig. 24 FILLER TUBE LINE DISCONNECTED

(7) Disconnect the fuel fill hose at the fuel tank filler metal tube **NOT AT THE FUEL TANK**.

(8) Disconnect fuel line and vapor line at the front of the fuel tank (Fig. 25), (Fig. 26).

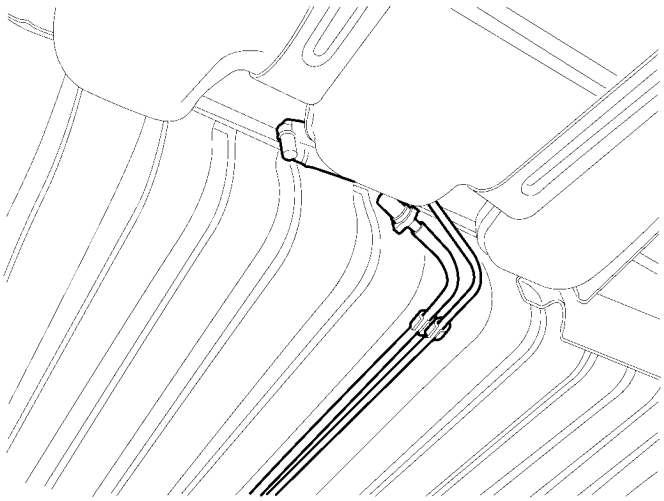

Fig. 25 FUEL SUPPLY LINE & EVAP LINE

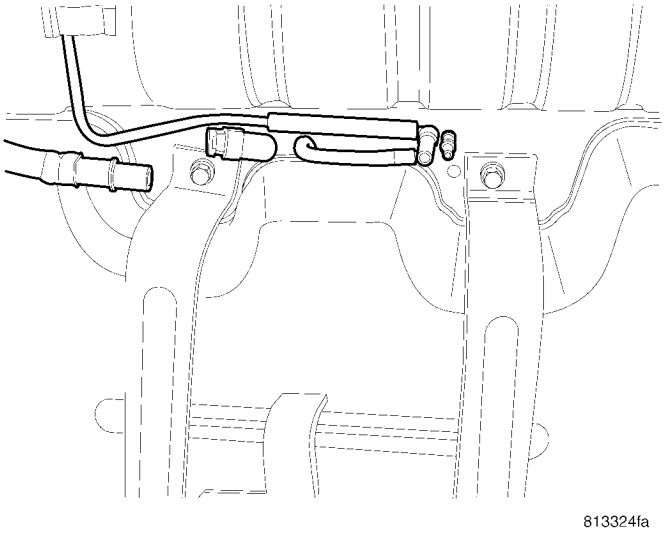

Fig. 26 FUEL SUPPLY & EVAP LINE DISCONNECTED

FUEL TANK (Continued)

(9) **The fuel pump module electrical connector has a retainer that locks it in place.**.Slide fuel pump module electrical connector lock to unlock (Fig. 27), (Fig. 28).

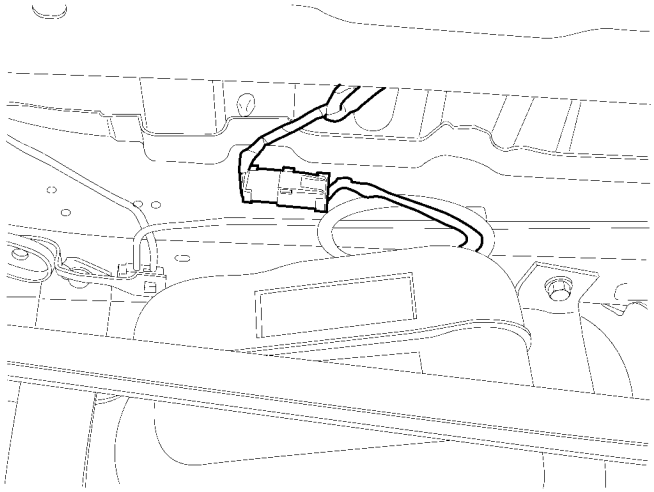

Fig. 27 ELECTRICAL CONNECTION

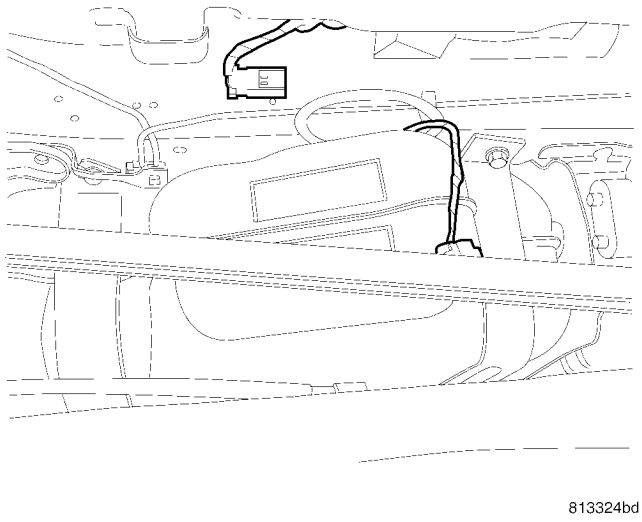

Fig. 28 ELECTRICAL CONNECTION REMOVED

(10) Push down on connector retainer disconnect the electrical connector.

(11) Lower tank slightly.

(12) Remove fuel filler vent tube from frame (Fig. 29).

(13) Lower tank from vehicle.

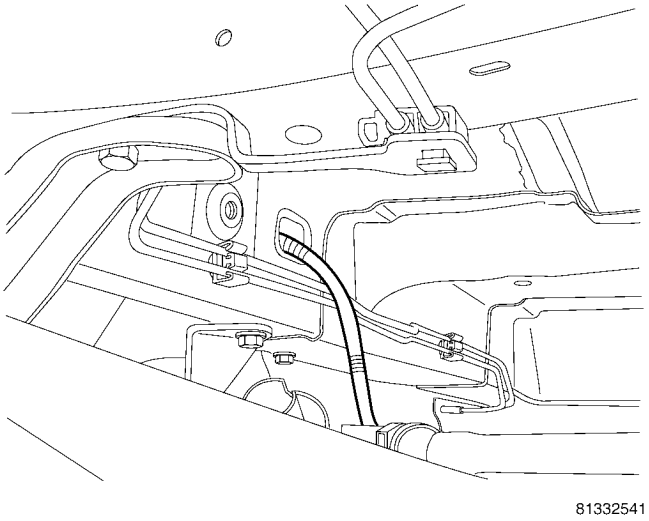

Fig. 29 FILLER TUBE VENT LINE THRU RAIL

INSTALLATION

INSTALLATION

(1) Position fuel tank on transmission jack. Connect check valve hose. Connect fuel filler tube vent hose to fuel filler tube.

(2) Feed filler vent line thru frame rail.

(3) Raise tank into position and carefully work fuel filler metal tube into the rubber hose on fuel tank. A light coating of clean engine oil on the tube end may be used to aid assembly.

(4) Tighten strap bolts to 54 N·m (40 ft. lbs.) torque. Tighten T strap bolt to 28.2 N·m (250 in. lbs.). Remove transmission jack.

(5) Tighten filler hose clamp to 3.3 N·m (30 in. lbs.).

CAUTION: Ensure straps are not twisted or bent before or after tightening strap screws.

(6) Connect fuel pump/module electrical connector. Place retainer in locked position.

(7) Lubricate the fuel supply line with clean 30 weight engine oil, install the quick connect fuel fitting. Refer to Tube/Fitting Assembly in the Fuel Delivery section of this section.

(8) Connect the control vapor lines at front of tank.

(9) Pull-pull-push on all connections to make sure of connection.

(10) Fill fuel tank, replace cap, and connect battery negative cable.

(11) Use the DRBIII® scan tool to pressurize the fuel system. Check for leaks.

FUEL TANK (Continued)

INSTALLATION - FOLD-IN-FLOOR

(1) Use a transmission jack to support fuel tank.
(2) Raise tank and install fuel filler vent tube thru frame (Fig. 29).
(3) Raise tank.
(4) Connect the fuel fill hose at the fuel tank filler metal tube and tighten clamp.

CAUTION: Ensure straps are not twisted or bent before or after tightening strap bolts.

(5) Install bolts for fuel tank straps (Fig. 23).
(6) Tighten strap bolts to 54 N·m (40 ft. lbs.) torque. Remove transmission jack.
(7) Connect the fuel filler vent tube.
(8) Connect fuel line and vapor line at the front of the fuel tank (Fig. 25), (Fig. 26).
(9) Connect the electrical connector.
(10) Slide fuel pump module electrical connector lock to lock (Fig. 27), (Fig. 28).
(11) Lower vehicle.
(12) Fill fuel tank, replace cap, and connect battery negative cable.
(13) Use the DRBIII® scan tool to pressurize the fuel system. Check for leaks.

FUEL TANK FILLER TUBE

REMOVAL

(1) Disconnect the negative battery cable.
(2) Remove the 3 screws at the filler door.
(3) Raise and support vehicle
(4) Remove the left rear tire.
(5) Remove the splash shield (Fig. 32) or (Fig. 31).
(6) Remove the metal shield (Fig. 30).

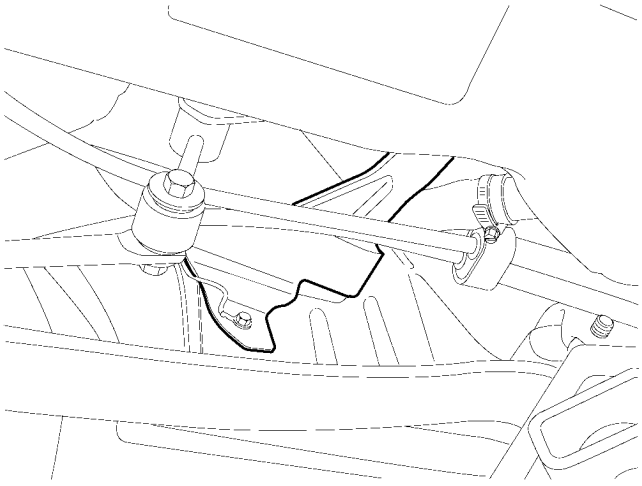

Fig. 30 FILLER TUBE SHIELD

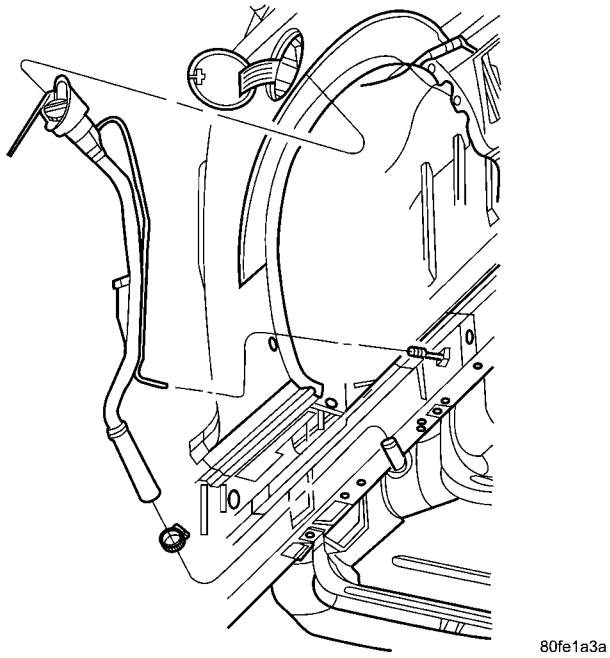

Fig. 31 FUEL FILLER TUBE (RS)

(7) **For RG**Remove the canister from filler tube (Fig. 33).

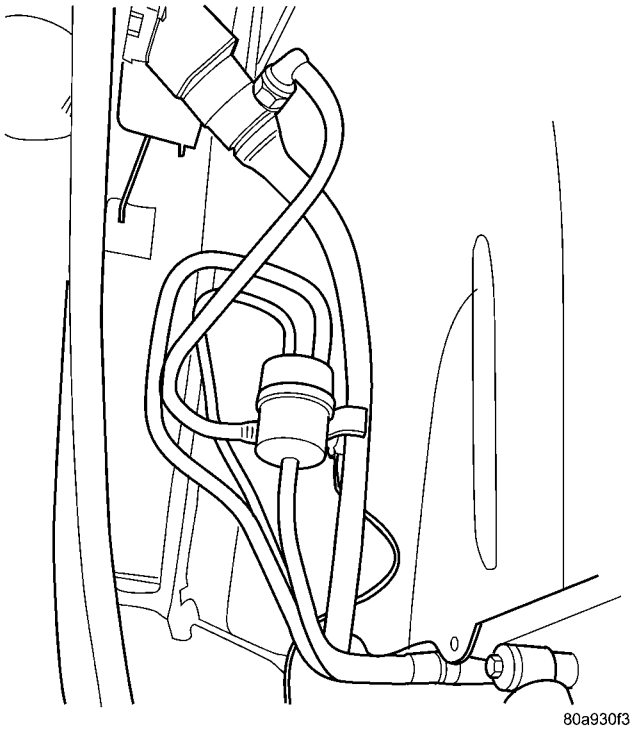

Fig. 32 FUEL FILLER TUBE AND VENT TUBE (RG)

FUEL TANK FILLER TUBE (Continued)

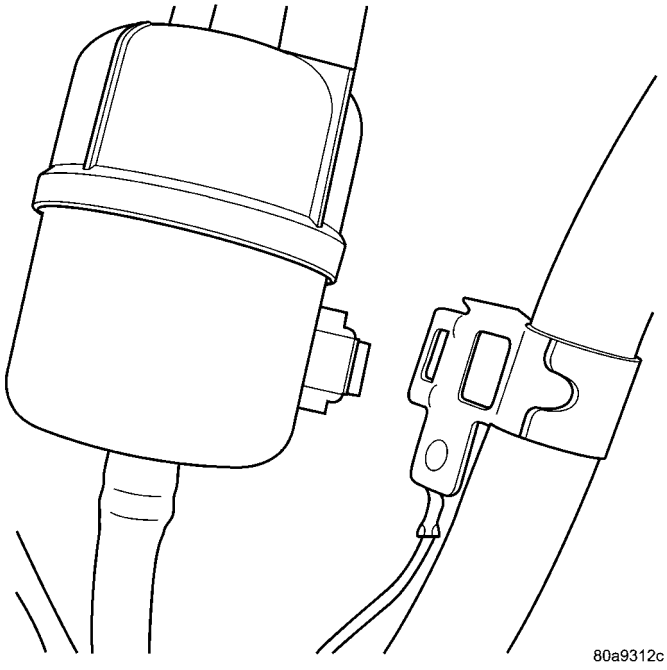

Fig. 33 FUEL TUBE VENT CANISTER (RG)

(8) **For RG**Disconnect the vent at the top of the filler tube.
(9) Remove the ground strap.
(10) Remove filler tube at tank.

INSTALLATION

(1) Install filler tube to tank (Fig. 32).
(2) Install filler tube shield (Fig. 34).

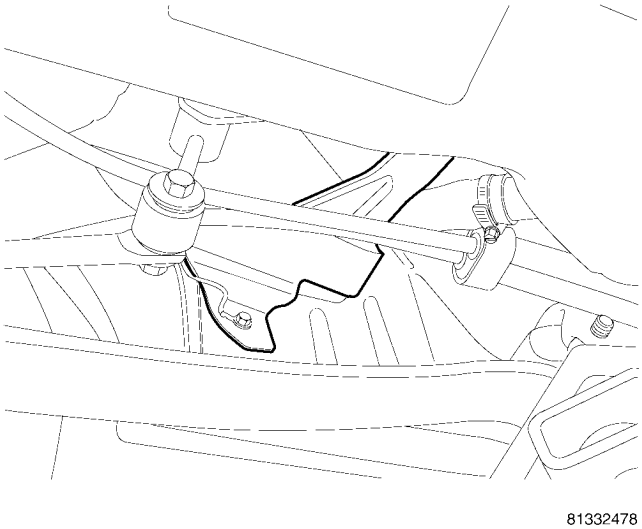

Fig. 34 FILLER TUBE SHIELD

(3) Install the ground strap.
(4) **For RG**Connect the vent at the top of the filler tube.
(5) Install the 3 screws at the filler door.
(6) **For RG**Install the canister from filler tube (Fig. 33).
(7) Install the splash shield.
(8) Install the left rear tire.
(9) lower vehicle.
(10) Connect the negative battery cable.

INLET FILTER

REMOVAL

(1) Remove fuel pump module. Refer to Fuel Pump Module Removal in this section.
(2) Using a thin straight blade screwdriver, pry back the locking tabs on fuel pump reservoir and remove the strainer (Fig. 35).
(3) Remove strainer O-ring from the fuel pump reservoir body.
(4) Remove any contaminants in the fuel tank by washing the inside of the fuel tank.

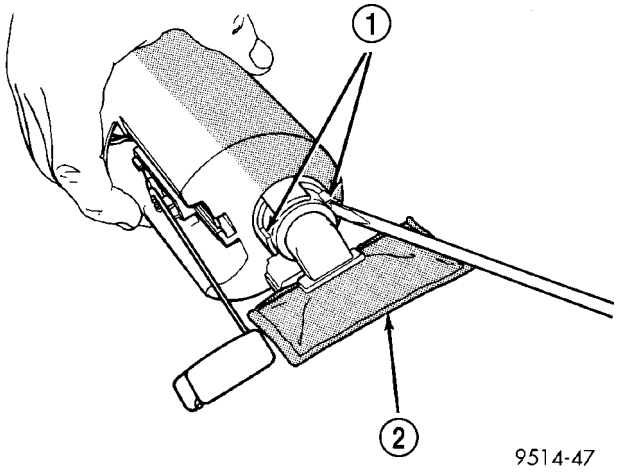

Fig. 35 Inlet

1 - TABS
2 - INLET STRAINER

INSTALLATION

(1) Lubricate the strainer O-ring with clean engine oil.
(2) Insert strainer O-ring into outlet of strainer so that it sits evenly on the step inside the outlet.
(3) Push strainer onto the inlet of the fuel pump reservoir body. Make sure the locking tabs on the reservoir body lock over the locking tangs on the strainer.
(4) Install fuel pump module. Refer to Fuel Pump Module Installation in this section.

QUICK CONNECT FITTING

STANDARD PROCEDURE - QUICK-CONNECT FITTINGS

REMOVAL

When disconnecting a quick-connect fitting, the retainer will remain on the fuel tube nipple.

WARNING: RELEASE FUEL SYSTEM PRESSURE BEFORE DISCONNECTING A QUICK-CONNECT FITTINGS. REFER TO THE FUEL PRESSURE RELEASE PROCEDURE. THIS MAY RESULT IN PERSONAL INJURY OR DEATH.

(1) Perform Fuel Pressure Release Procedure. Refer to the Fuel Pressure Release Procedure in this section.

(2) Disconnect negative cable from battery or auxiliary jumper terminal.

(3) Squeeze retainer tabs together and pull fuel tube/quick-connect fitting assembly off of fuel tube nipple. The retainer will remain on fuel tube.

INSTALLATION

CAUTION: Make sure that the o-ring in installed in fitting. Never install a quick-connect fitting without the retainer being either on the fuel tube or already in the quick-connect fitting. In either case, ensure the retainer locks securely into the quick-connect fitting by firmly push-pulling-push on fuel tube and fitting to ensure it is secured.

(1) Using a clean lint free cloth, clean the fuel tube nipple and retainer.

(2) Prior to connecting the fitting to the fuel tube, coat the fuel tube nipple with clean engine oil.

(3) Push the quick-connect fitting over the fuel tube until the **retainer seats and a click is heard.**

(4) The plastic quick-connect fitting has windows in the sides of the casing. When the fitting completely attaches to the fuel tube, the retainer locking ears and the fuel tube shoulder are visible in the windows. If they are not visible, the retainer was not properly installed (Fig. 36). **Do not rely upon the audible click to confirm a secure connection.**

(5) Connect negative cable to battery or auxiliary jumper terminal.

CAUTION: When using the ASD Fuel System Test, the Auto Shutdown (ASD) Relay remains energized for several minutes, until the test is stopped, or until the ignition switch is turned to the Off position.

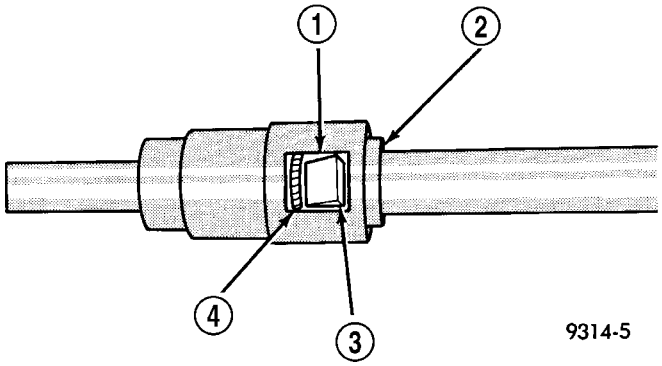

Fig. 36 Plastic Quick-Connect Fitting/Fuel Tube Connection

1 - WINDOW
2 - TAB (2)
3 - EAR
4 - SHOULDER (ON TUBE)

(6) Use the DRB III® scan tool ASD Fuel System Test to pressurize the fuel system. Check for leaks.

TWO-TAB TYPE FITTING

This type of fitting is equipped with tabs located on both sides of the fitting (Fig. 37). These tabs are supplied for disconnecting the quick-connect fitting from component being serviced.

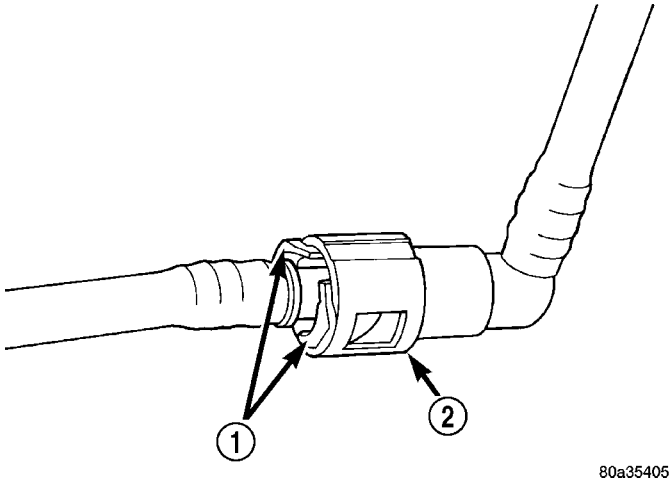

Fig. 37 Typical Two-Tab Type Quick-Connect Fitting

1 - TAB(S)
2 - QUICK-CONNECT FITTING

CAUTION: The interior components (O-rings, spacers) of this type of quick-connect fitting are not serviced separately, but new plastic retainers are available. Do not attempt to repair damaged fittings or fuel lines/tubes. If repair is necessary, replace the complete fuel tube assembly.

QUICK CONNECT FITTING (Continued)

WARNING: THE FUEL SYSTEM IS UNDER A CONSTANT PRESSURE (EVEN WITH THE ENGINE OFF). BEFORE SERVICING ANY FUEL SYSTEM HOSES, FITTINGS OR LINES, THE FUEL SYSTEM PRESSURE MUST BE RELEASED. REFER TO THE FUEL PRESSURE RELEASE PROCEDURE IN THIS GROUP. THIS MAY RESULT IN PERSONAL INJURY OR DEATH.

DISCONNECTION/CONNECTION

(1) Perform fuel pressure release procedure. Refer to Fuel Pressure Release Procedure in this group.

(2) Disconnect negative battery cable from battery or auxiliary jumper terminal.

(3) Clean fitting of any foreign material before disassembly.

(4) To disconnect quick-connect fitting, squeeze plastic retainer tabs (Fig. 37) against sides of quick-connect fitting with your fingers. Tool use is not required for removal and may damage plastic retainer. Pull fitting from fuel system component being serviced. The plastic retainer will remain on component being serviced after fitting is disconnected. The O-rings and spacer will remain in quick-connect fitting connector body.

(5) Inspect quick-connect fitting body and component for damage. Replace as necessary.

CAUTION: When the quick-connect fitting was disconnected, the plastic retainer will remain on the component being serviced. If this retainer must be removed, very carefully release the retainer from the component with two small screwdrivers. After removal, inspect the retainer for cracks or any damage.

(6) Prior to connecting quick-connect fitting to component being serviced, check condition of fitting and component. Clean parts with a lint-free cloth. Lubricate with clean engine oil.

(7) Insert quick-connect fitting to component being serviced and into plastic retainer. When a connection is made, a click will be heard.

(8) Verify a locked condition by firmly push-pulling-push on fuel tube and fitting (15-30 lbs.).

(9) Connect negative cable to battery or auxiliary jumper terminal.

(10) Use the DRB III® scan tool ASD Fuel System Test to pressurize the fuel system. Check for leaks.

PLASTIC RETAINER RING TYPE FITTING

This type of fitting can be identified by the use of a full-round plastic retainer ring (Fig. 38) usually black in color.

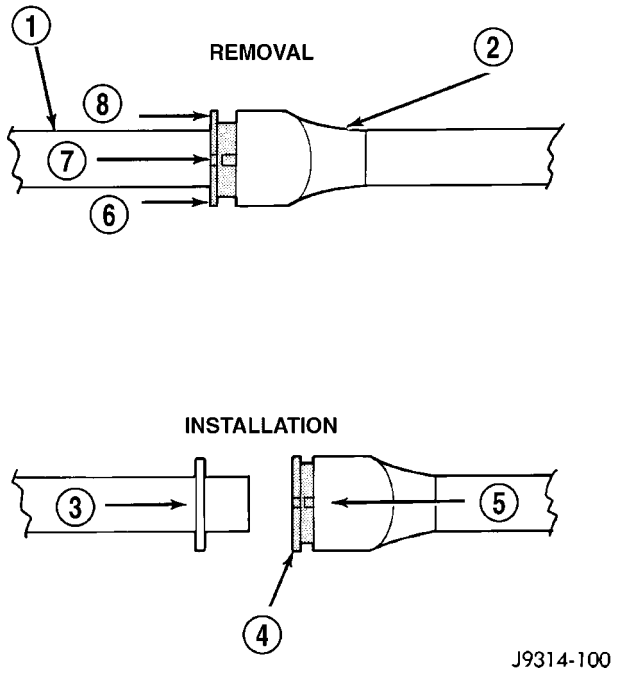

Fig. 38 Plastic Retainer Ring Type Fitting

1 - FUEL TUBE
2 - QUICK CONNECT FITTING
3 - PUSH
4 - PLASTIC RETAINER
5 - PUSH
6 - PUSH
7 - PUSH
8 - PUSH

CAUTION: The interior components (O-rings, spacers, retainers) of this type of quick-connect fitting are not serviced separately. Do not attempt to repair damaged fittings or fuel lines/tubes. If repair is necessary, replace the complete fuel tube assembly.

WARNING: THE FUEL SYSTEM IS UNDER A CONSTANT PRESSURE (EVEN WITH THE ENGINE OFF). BEFORE SERVICING ANY FUEL SYSTEM HOSES, FITTINGS OR LINES, THE FUEL SYSTEM PRESSURE MUST BE RELEASED. REFER TO THE FUEL SYSTEM PRESSURE RELEASE PROCEDURE IN THIS GROUP. THIS MAY RESULT IN PERSONAL INJURY OR DEATH.

QUICK CONNECT FITTING (Continued)

DISCONNECTION/CONNECTION

(1) Perform fuel pressure release procedure. Refer to Fuel Pressure Release Procedure in this section.

(2) Disconnect negative battery cable from battery or auxiliary jumper terminal.

(3) Clean fitting of any foreign material before disassembly.

(4) To release fuel system component from quick-connect fitting, firmly push fitting towards component being serviced while firmly pushing plastic retainer ring into fitting (Fig. 38). With plastic ring depressed, pull fitting from component. **The plastic retainer ring must be pressed squarely into fitting body. If this retainer is cocked during removal, it may be difficult to disconnect fitting. Use an open-end wrench on shoulder of plastic retainer ring to aid in disconnection.**

(5) After disconnection, plastic retainer ring will remain with quick-connect fitting connector body.

(6) Inspect fitting connector body, plastic retainer ring and fuel system component for damage. Replace as necessary.

(7) Prior to connecting quick-connect fitting to component being serviced, check condition of fitting and component. Clean parts with a lint-free cloth. Lubricate with clean engine oil.

(8) Insert quick-connect fitting into component being serviced until a click is felt.

(9) Verify a locked condition by firmly push-pulling-push on fuel tube and fitting (15-30 lbs.).

(10) Connect negative battery cable to battery or auxiliary jumper terminal.

(11) Use the DRB III® scan tool ASD Fuel System Test to pressurize the fuel system. Check for leaks.

FUEL INJECTION

TABLE OF CONTENTS

page

FUEL INJECTION
OPERATION
OPERATION - INJECTION SYSTEM 22
OPERATION - MODES OF OPERATION 22
FUEL CORRECTION or ADAPTIVE MEMORIES 24
PROGRAMMABLE COMMUNICATIONS INTERFACE (PCI) BUS 25
SYSTEM DIAGNOSIS 26
SPECIFICATIONS
TORQUE 26
SPECIAL TOOLS
FUEL 27
ACCELERATOR PEDAL
REMOVAL 28
INSTALLATION 28
CRANKSHAFT POSITION SENSOR
DESCRIPTION 29
OPERATION 29
REMOVAL 30
INSTALLATION - 2.4L 30
ENGINE SPEED SENSOR
DESCRIPTION 30
OPERATION 30
FUEL INJECTOR
DESCRIPTION 30
OPERATION 31
REMOVAL
REMOVAL - 2.4L 31
REMOVAL - 3.3/3.8L 31
INSTALLATION
INSTALLATION - 2.4L 32
INSTALLATION - 3.3/3.8L 32
FUEL PUMP RELAY
DESCRIPTION 32
OPERATION 32
IDLE AIR CONTROL MOTOR
DESCRIPTION 33
OPERATION 33

page

REMOVAL 33
INSTALLATION 33
INLET AIR TEMPERATURE SENSOR
DESCRIPTION 34
MAP SENSOR
DESCRIPTION 34
OPERATION 34
REMOVAL
REMOVAL - 2.4L 35
REMOVAL - 3.3/3.8L 35
INSTALLATION
INSTALLATION - 2.4L 36
INSTALLATION - 3.3/3.8L 36
O2 SENSOR
DESCRIPTION 36
OPERATION 36
REMOVAL
REMOVAL - UPSTREAM 1/1 - 2.4L 37
REMOVAL - UPSTREAM 1/1 - 3.3/3.8L 38
REMOVAL - DOWNSTREAM 1/2 - 2.4/3.3/3.8L 38
INSTALLATION
INSTALLATION - UPSTREAM 1/1 - 2.4L 38
INSTALLATION - UPSTREAM 1/1 - 3.3/3.8L . . 39
INSTALLATION DOWNSTREAM 2/1 - 2.4/3.3/3.8L 39
THROTTLE BODY
DESCRIPTION 39
OPERATION 39
REMOVAL 40
INSTALLATION 40
THROTTLE CONTROL CABLE
REMOVAL 40
INSTALLATION 40
THROTTLE POSITION SENSOR
DESCRIPTION 40
OPERATION 41
REMOVAL - 3.3/3.8L 41
INSTALLATION - 3.3/3.8L 41

FUEL INJECTION

OPERATION

OPERATION - INJECTION SYSTEM

All engines used in this section have a sequential Multi-Port Electronic Fuel Injection system. The MPI system is computer regulated and provides precise air/fuel ratios for all driving conditions. The Powertrain Control Module (PCM) operates the fuel injection system.

The PCM regulates:

- Ignition timing
- Air/fuel ratio
- Emission control devices
- Cooling fan
- Charging system
- Idle speed
- Vehicle speed control

Various sensors provide the inputs necessary for the PCM to correctly operate these systems. In addition to the sensors, various switches also provide inputs to the PCM.

The PCM can adapt its programming to meet changing operating conditions.

Fuel is injected into the intake port above the intake valve in precise metered amounts through electrically operated injectors. The PCM fires the injectors in a specific sequence. Under most operating conditions, the PCM maintains an air fuel ratio of 14.7 parts air to 1 part fuel by constantly adjusting injector pulse width. Injector pulse width is the length of time the injector is open.

The PCM adjusts injector pulse width by opening and closing the ground path to the injector. Engine RPM (speed) and manifold absolute pressure (air density) are the **primary** inputs that determine injector pulse width.

OPERATION - MODES OF OPERATION

As input signals to the PCM change, the PCM adjusts its response to output devices. For example, the PCM must calculate a different injector pulse width and ignition timing for idle than it does for Wide Open Throttle (WOT). There are several different modes of operation that determine how the PCM responds to the various input signals.

There are two different areas of operation, OPEN LOOP and CLOSED LOOP.

During OPEN LOOP modes the PCM receives input signals and responds according to preset PCM programming. Inputs from the upstream and downstream heated oxygen sensors are not monitored during OPEN LOOP modes, except for heated oxygen sensor diagnostics (they are checked for shorted conditions at all times).

During CLOSED LOOP modes the PCM monitors the inputs from the upstream and downstream heated oxygen sensors. The upstream heated oxygen sensor input tells the PCM if the calculated injector pulse width resulted in the ideal air-fuel ratio of 14.7 to one. By monitoring the exhaust oxygen content through the upstream heated oxygen sensor, the PCM can fine tune injector pulse width. Fine tuning injector pulse width allows the PCM to achieve optimum fuel economy combined with low emissions.

For the PCM to enter CLOSED LOOP operation, the following must occur:

(1) Engine coolant temperature must be over 35°F.

- If the coolant is over 35°F the PCM will wait 38 seconds.
- If the coolant is over 50°F the PCM will wait 15 seconds.
- If the coolant is over 167°F the PCM will wait 3 seconds.

(2) For other temperatures the PCM will interpolate the correct waiting time.

(3) O2 sensor must read either greater than 0.745 volts or less than 0.29 volt.

(4) The multi-port fuel injection systems has the following modes of operation:

- Ignition switch ON (Zero RPM)
- Engine start-up
- Engine warm-up
- Cruise
- Idle
- Acceleration
- Deceleration
- Wide Open Throttle
- Ignition switch OFF

(5) The engine start-up (crank), engine warm-up, deceleration with fuel shutoff and wide open throttle modes are OPEN LOOP modes. Under most operating conditions, the acceleration, deceleration (with A/C on), idle and cruise modes, **with the engine at operating temperature** are CLOSED LOOP modes.

IGNITION SWITCH ON (ZERO RPM) MODE

When the ignition switch activates the fuel injection system, the following actions occur:

- The PCM monitors the engine coolant temperature sensor and throttle position sensor input. The PCM determines basic fuel injector pulse width from this input.
- The PCM determines atmospheric air pressure from the MAP sensor input to modify injector pulse width.

When the key is in the ON position and the engine is not running (zero rpm), the Auto Shutdown (ASD) and fuel pump relays de-energize after approximately

FUEL INJECTION (Continued)

1 second. Therefore, battery voltage is not supplied to the fuel pump, ignition coil, fuel injectors and heated oxygen sensors.

ENGINE START-UP MODE

This is an OPEN LOOP mode. If the vehicle is in park or neutral (automatic transaxles) or the clutch pedal is depressed (manual transaxles) the ignition switch energizes the starter relay when the engine is not running. The following actions occur when the starter motor is engaged.

- If the PCM receives the camshaft position sensor and crankshaft position sensor signals, it energizes the Auto Shutdown (ASD) relay and fuel pump relay. If the PCM does not receive both signals within approximately one second, it will not energize the ASD relay and fuel pump relay. The ASD and fuel pump relays supply battery voltage to the fuel pump, fuel injectors, ignition coil, (EGR solenoid and PCV heater if equipped) and heated oxygen sensors.
- The PCM energizes the injectors (on the 69° degree falling edge) for a calculated pulse width until it determines crankshaft position from the camshaft position sensor and crankshaft position sensor signals. The PCM determines crankshaft position within 1 engine revolution.
- After determining crankshaft position, the PCM begins energizing the injectors in sequence. It adjusts injector pulse width and controls injector synchronization by turning the individual ground paths to the injectors On and Off.
- When the engine idles within ±64 RPM of its target RPM, the PCM compares current MAP sensor value with the atmospheric pressure value received during the Ignition Switch On (zero RPM) mode.

Once the ASD and fuel pump relays have been energized, the PCM determines injector pulse width based on the following:

- MAP
- Engine RPM
- Battery voltage
- Engine coolant temperature
- Inlet/Intake air temperature (IAT)
- Throttle position
- The number of engine revolutions since cranking was initiated

During Start-up the PCM maintains ignition timing at 9° BTDC.

ENGINE WARM-UP MODE

This is an OPEN LOOP mode. The following inputs are received by the PCM:

- Manifold Absolute Pressure (MAP)
- Crankshaft position (engine speed)
- Engine coolant temperature
- Inlet/Intake air temperature (IAT)
- Camshaft position
- Knock sensor
- Throttle position
- A/C switch status
- Battery voltage
- Vehicle speed
- Speed control
- O2 sensors

The PCM adjusts injector pulse width and controls injector synchronization by turning the individual ground paths to the injectors On and Off.

The PCM adjusts ignition timing and engine idle speed. Engine idle speed is adjusted through the idle air control motor.

CRUISE OR IDLE MODE

When the engine is at operating temperature this is a CLOSED LOOP mode. During cruising or idle the following inputs are received by the PCM:

- Manifold absolute pressure
- Crankshaft position (engine speed)
- Inlet/Intake air temperature
- Engine coolant temperature
- Camshaft position
- Knock sensor
- Throttle position
- Exhaust gas oxygen content (O2 sensors)
- A/C switch status
- Battery voltage
- Vehicle speed

The PCM adjusts injector pulse width and controls injector synchronization by turning the individual ground paths to the injectors On and Off.

The PCM adjusts engine idle speed and ignition timing. The PCM adjusts the air/fuel ratio according to the oxygen content in the exhaust gas (measured by the upstream and downstream heated oxygen sensor).

The PCM monitors for engine misfire. During active misfire and depending on the severity, the PCM either continuously illuminates or flashes the malfunction indicator lamp (Check Engine light on instrument panel). Also, the PCM stores an engine misfire DTC in memory, if 2nd trip with fault.

The PCM performs several diagnostic routines. They include:

- Oxygen sensor monitor
- Downstream heated oxygen sensor diagnostics during open loop operation (except for shorted)
- Fuel system monitor
- EGR monitor (if equipped)
- Purge system monitor
- Catalyst efficiency monitor
- All inputs monitored for proper voltage range, rationality.

• All monitored components (refer to the Emission section for On-Board Diagnostics).

The PCM compares the upstream and downstream heated oxygen sensor inputs to measure catalytic convertor efficiency. If the catalyst efficiency drops below the minimum acceptable percentage, the PCM stores a diagnostic trouble code in memory, after 2 trips.

During certain idle conditions, the PCM may enter a variable idle speed strategy. During variable idle speed strategy the PCM adjusts engine speed based on the following inputs.

- A/C status
- Battery voltage
- Battery temperature or Calculated Battery Temperature
- Engine coolant temperature
- Engine run time
- Inlet/Intake air temperature
- Vehicle mileage

ACCELERATION MODE

This is a CLOSED LOOP mode. The PCM recognizes an abrupt increase in Throttle Position sensor output voltage or MAP sensor output voltage as a demand for increased engine output and vehicle acceleration. The PCM increases injector pulse width in response to increased fuel demand.

- Wide Open Throttle-open loop

DECELERATION MODE

This is a CLOSED LOOP mode. During deceleration the following inputs are received by the PCM:

- A/C status
- Battery voltage
- Inlet/Intake air temperature
- Engine coolant temperature
- Crankshaft position (engine speed)
- Exhaust gas oxygen content (upstream heated oxygen sensor)
- Knock sensor
- Manifold absolute pressure
- Throttle position sensor
- IAC motor (solenoid) control changes in response to MAP sensor feedback

The PCM may receive a closed throttle input from the Throttle Position Sensor (TPS) when it senses an abrupt decrease in manifold pressure. This indicates a hard deceleration (Open Loop). In response, the PCM may momentarily turn off the injectors. This helps improve fuel economy, emissions and engine braking.

WIDE-OPEN-THROTTLE MODE

This is an OPEN LOOP mode. During wide-open-throttle operation, the following inputs are used by the PCM:

- Inlet/Intake air temperature
- Engine coolant temperature
- Engine speed
- Knock sensor
- Manifold absolute pressure
- Throttle position

When the PCM senses a wide-open-throttle condition through the Throttle Position Sensor (TPS) it de-energizes the A/C compressor clutch relay. This disables the air conditioning system and disables EGR (if equipped).

The PCM adjusts injector pulse width to supply a predetermined amount of additional fuel, based on MAP and RPM.

IGNITION SWITCH OFF MODE

When the operator turns the ignition switch to the OFF position, the following occurs:

• All outputs are turned off, unless 02 Heater Monitor test is being run. Refer to the Emission section for On-Board Diagnostics.

• No inputs are monitored except for the heated oxygen sensors. The PCM monitors the heating elements in the oxygen sensors and then shuts down.

FUEL CORRECTION or ADAPTIVE MEMORIES

DESCRIPTION

In Open Loop, the PCM changes pulse width without feedback from the O2 Sensors. Once the engine warms up to approximately 30 to 35° F, the PCM goes into closed loop **Short Term Correction** and utilizes feedback from the O2 Sensors. Closed loop **Long Term Adaptive Memory** is maintained above 170° to 190° F unless the PCM senses wide open throttle. At that time the PCM returns to Open Loop operation.

OPERATION

Short Term

The first fuel correction program that begins functioning is the short term fuel correction. This system corrects fuel delivery in direct proportion to the readings from the Upstream O2 Sensor.

The PCM monitors the air/fuel ratio by using the input voltage from the O2 Sensor. When the voltage reaches its preset high or low limit, the PCM begins to add or remove fuel until the sensor reaches its switch point. The short term corrections then begin.

The PCM makes a series of quick changes in the injector pulse-width until the O2 Sensor reaches its

FUEL INJECTION (Continued)

opposite preset limit or switch point. The process then repeats itself in the opposite direction.

Short term fuel correction will keep increasing or decreasing injector pulse-width based upon the upstream O2 Sensor input. The maximum range of authority for short term memory is 25% (+/-) of base pulse-width. Short term is violated and is lost when ignition is turned OFF.

Long Term

The second fuel correction program is the long term adaptive memory. In order to maintain correct emission throughout all operating ranges of the engine, a cell structure based on engine rpm and load (MAP) is used.

Ther number of cells varies upon the driving conditions. Two cells are used only during idle, based upon TPS and Park/Neutral switch inputs. There may be two other cells used for deceleration, based on TPS, engine rpm, and vehicle speed. The other twelve cells represent a manifold pressure and an rpm range. Six of the cells are high rpm and the other six are low rpm. Each of these cells has a specific MAP voltage range Typical Adaptive Memory Fuel Cells.

As the engine enters one of these cells the PCM looks at the amount of short term correction being used. Because the goal is to keep short term at 0 (O2 Sensor switching at 0.5 volt), long term will update in the same direction as short term correction was moving to bring the short term back to 0. Once short term is back at 0, this long term correction factor is stored in memory.

The values stored in long term adaptive memory are used for all operating conditions, including open loop and cold starting. However, the updating of the long term memory occurs after the engine has exceeded approximately 170°-190° F, with fuel control in closed loop and two minutes of engine run time. This is done to prevent any transitional temperature or start-up compensations from corrupting long term fuel correction.

Long term adaptive memory can change the pulse-width by as much as 25%, which means it can correct for all of short term. It is possible to have a problem that would drive long term to 25% and short term to another 25% for a total change of 50% away from base pulse-width calculation.

TYPICAL ADAPTIVE MEMORY FUEL CELLS

	Open Throttle	Open Throttle	Open Throttle	Open Throttle	Open Throttle	Open Throttle	Idle	Decel
Vacuum	20	17	13	9	5	0		
Above 1,984 rpm	1	3	5	7	9	11	13 Drive	15
Below 1,984 rpm	0	2	4	6	8	10	12 Neutral	14
MAP volt =	0	1.4	2.0	2.6	3.3	3.9		

Fuel Correction Diagnostics

There are two fuel correction diagnostic routines:

- Fuel System Rich
- Fuel System Lean

A DTC is set and the MIL is illuminated if the PCM detects either of these conditions. This is determined based on total fuel correction, short term times long term.

PROGRAMMABLE COMMUNICATIONS INTERFACE (PCI) BUS

DESCRIPTION

The Programmable Communication Interface Multiplex system (PCI Bus) consist of a single wire. The Body Control Module (BCM) acts as a splice to connect each module and the Data Link Connector (DLC) together. Each module is wired in parallel to the data bus through its PCI chip set and uses its ground as the bus reference. The wiring is a minimum 20 gage wire.

OPERATION

Various modules exchange information through a communications port called the PCI Bus. The Powertrain Control Module (PCM) transmits the Malfunction Indicator Lamp (Check Engine) On/Off signal and engine RPM on the PCI Bus. The PCM receives the Air Conditioning select input, transaxle gear position inputs over the PCI Bus. The PCM also receives the air conditioning evaporator temperature signal from the PCI Bus.

FUEL INJECTION (Continued)

The following components access or send information on the PCI Bus.

- Instrument Panel
- Body Control Module
- Air Bag System Diagnostic Module
- Full ATC Display Head (if equipped)
- ABS Module
- Transmission Control Module
- Powertrain Control Module
- Travel Module
- SKIM

SYSTEM DIAGNOSIS

OPERATION

The PCM can test many of its own input and output circuits. If the PCM senses a fault in a major system, the PCM stores a Diagnostic Trouble Code (DTC) in memory.

For DTC information see On-Board Diagnostics (Refer to 8 - ELECTRICAL/ELECTRONIC CONTROL MODULES/POWERTRAIN CONTROL MODULE - DESCRIPTION) .

SPECIFICATIONS

TORQUE

DESCRIPTION	N·m	Ft. Lbs.	In. Lbs.
MAP SENSOR PLASTIC MANIFOLD	1.7		15
MAP SENSOR ALUMINUM MANIFOLD	3.3		30
POWER STEERING RESERVOIR PLASTIC MANIFOLD	5.7		50
POWER STEERING RESERVOIR ALUMINUM MANIFOLD	11.9		105
THROTTLE CABLE BRACKET PLASTIC MANIFOLD	5.7		50
THROTTLE CABLE BRACKET ALUMINUM MANIFOLD	11.9		105
EGR TUBE PLASTIC MANIFOLD	5.7		50
EGR TUBE ALUMINUM MANIFOLD	11.9		105
THROTTLE BODY BOLTS 2.4L	28	20.65	250 ±50
THROTTLE BODY BOLTS 3.3/3.8L	11.8	8.7	105 ±20
O2 Sensors	27	20	
The composite manifolds uses special Plastic screws. The factory installed Plastic screws can be removed and installed up to 5 times. Do not exceed the specified torque. These screws must be installed slowly (less than 600 rpms) to avoid melting the parent material. There are service repair screws avialable for repair. They require a higher torque than the original screws..			

FUEL INJECTION (Continued)

SPECIAL TOOLS

FUEL

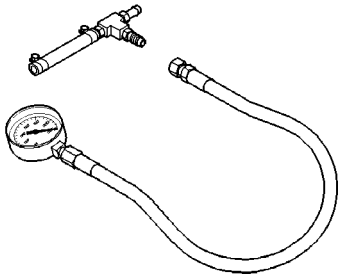

Pressure Gauge Assembly C–4799–B

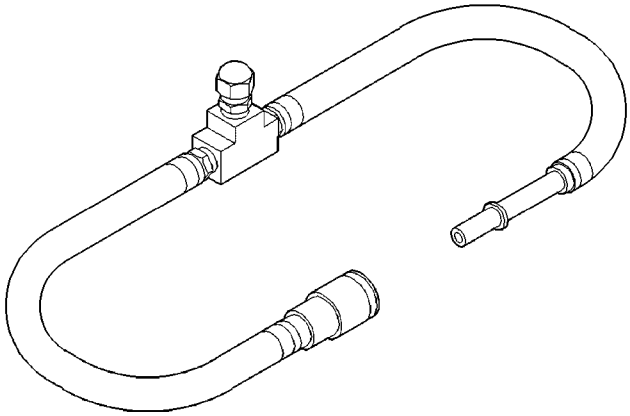

Fuel Pressure Test Adapter 6539

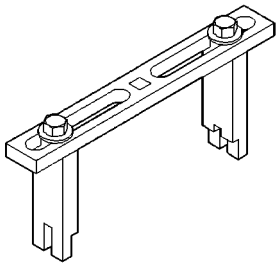

Spanner Wrench 6856

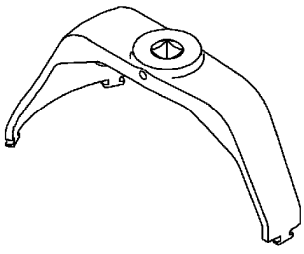

LOCKRING REMOVER/INSTALLER #9340

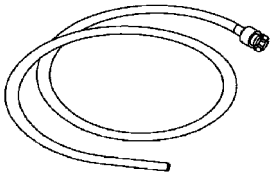

Fuel Line Adapter 1/4

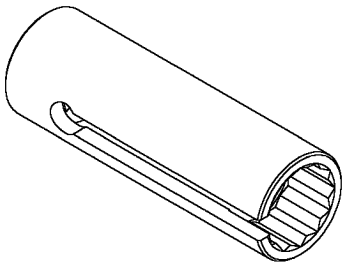

O2S (Oxygen Sensor) Remover/Installer—C-4907

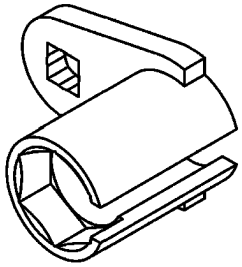

O2S (Oxygen Sensor) Remover/Installer - 8439

ACCELERATOR PEDAL

REMOVAL

(1) Hold the throttle body throttle lever in the wide open position. Remove the throttle cable from the throttle body cam (Fig. 1).

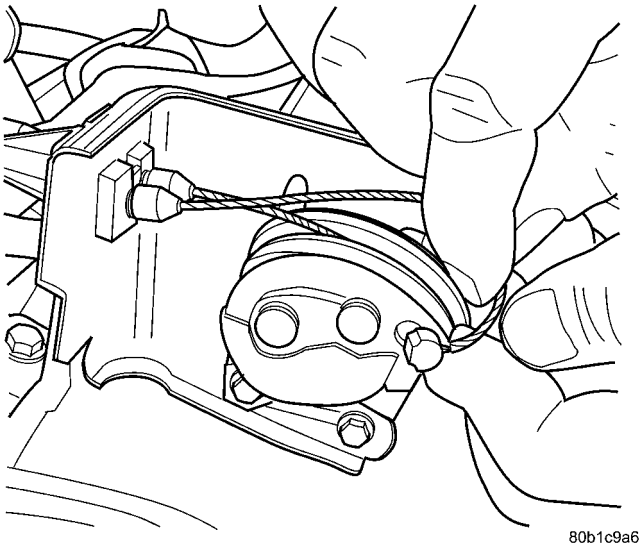

Fig. 1 THROTTLE CABLE RELEASE

(2) From inside the vehicle, hold up the pedal and remove the cable retainer and throttle cable from the upper end of the pedal lever (Fig. 2).

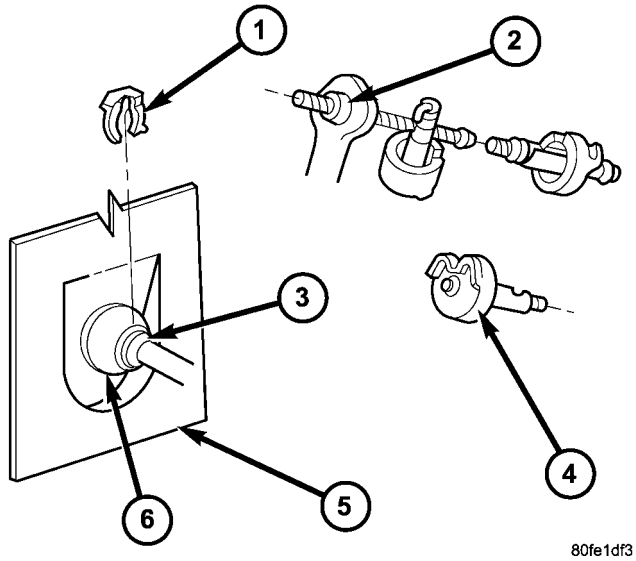

Fig. 2 CABLE CLIP AND GROMMET

1 - Retainer Clip
2 - Grommet
3 - Cable Assembly
4 - Cable Retainer
5 - Dash Panel
6 - Grommet

(3) Remove nuts from accelerator pedal attaching studs. Remove assembly from vehicle (Fig. 3).

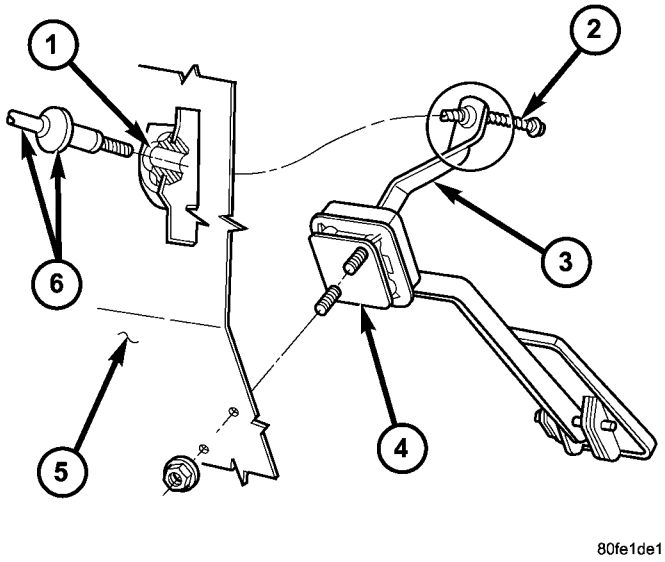

Fig. 3 ACCELERATOR PEDAL AND THROTTLE CABLE

1 - Grommet
2 - Cable
3 - Pedal Shaft and Bracket
4 - Seal
5 - Dash Panel
6 - Cable Assembly

INSTALLATION

(1) Position accelerator pedal assembly on dash panel. Install retaining nuts. Tighten retaining nuts to 12 N·m (105 in. lbs.) torque (Fig. 3).

(2) From inside the vehicle, hold up the pedal and install the throttle cable and cable retainer in the upper end of the pedal lever (Fig. 2).

(3) From the engine compartment, hold the throttle body lever in the wide open position and install the throttle cable (Fig. 1).

CRANKSHAFT POSITION SENSOR

DESCRIPTION

The 2.4L crankshaft sensor is located on the rear of the engine near the accessory drive belt (Fig. 4). The 3.3/3.8L crankshaft sensor is located on the rear of the transmission housing, above the differential housing (Fig. 5). The bottom of the sensor is positioned next to the drive plate.

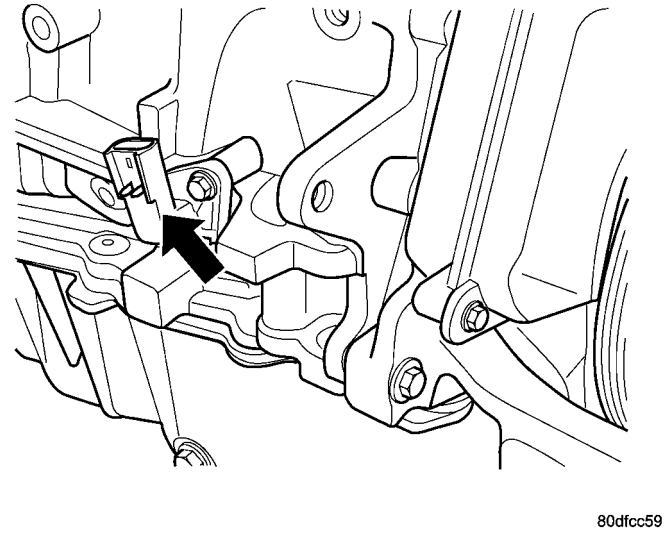

Fig. 4 CRANKSHAFT SENSOR 2.4L

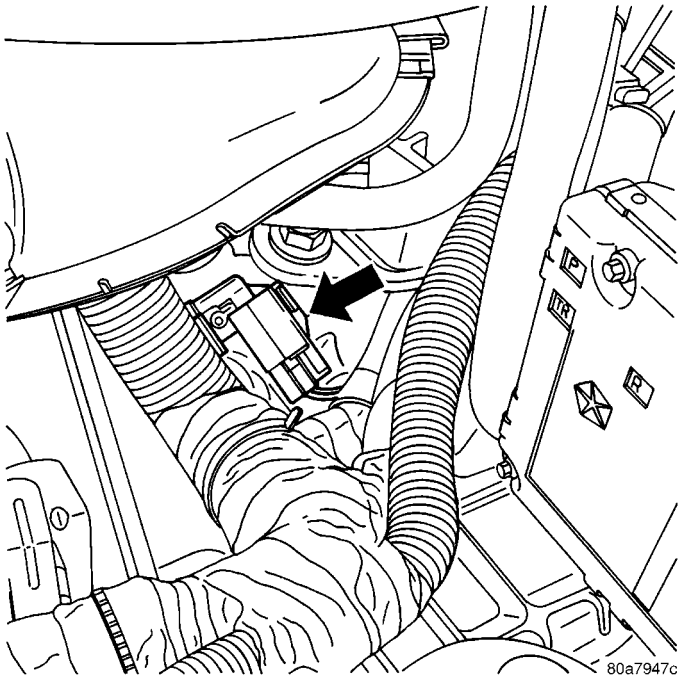

Fig. 5 CRANKSHAFT SENSOR 3.3/3.8L

OPERATION

The crankshaft position sensor detects slots cut into the transmission driveplate extension (Fig. 6). There are 3 sets of slots. Each set contains 4 slots, for a total of 12 slots (Fig. 7). Basic timing is set by the position of the last slot in each group. Once the Powertrain Control Module (PCM) senses the last slot, it determines crankshaft position (which piston will next be at TDC) from the camshaft position sensor input. The 4 pulses generated by the crankshaft position sensor represent the 69°, 49°, 29°, and 9° BTDC marks. It may take the PCM one engine revolution to determine crankshaft position.

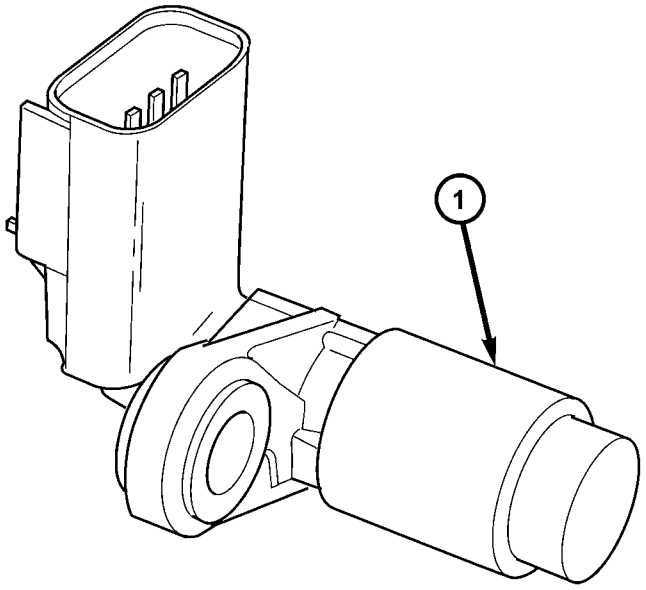

Fig. 6 Crankshaft Position Sensor

1 - CRANKSHAFT POSITION SENSOR

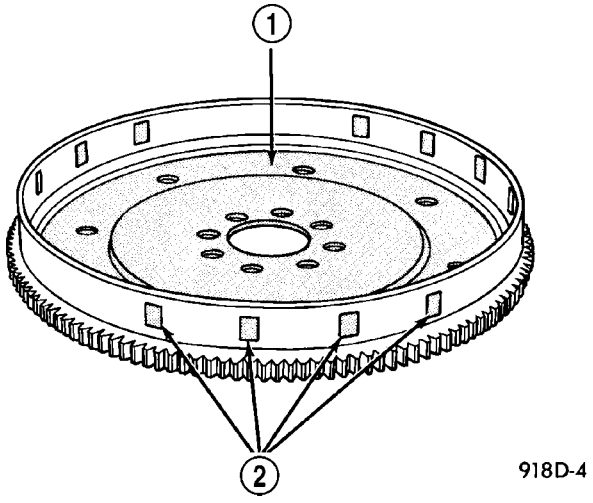

Fig. 7 Timing Slots

1 - TORQUE CONVERTER DRIVE PLATE
2 - SLOTS

CRANKSHAFT POSITION SENSOR (Continued)

The PCM uses crankshaft position reference to determine injector sequence, ignition timing and the presence of misfire. Once the PCM determines crankshaft position, it begins energizing the injectors in sequence.

REMOVAL

(1) Disconnect the negative battery cable.
(2) Raise vehicle and support.
(3) Disconnect the electrical connector (Fig. 8).

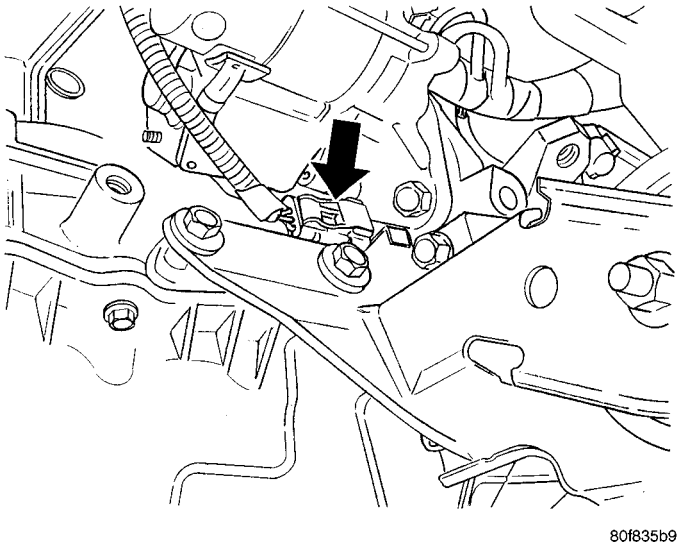

Fig. 8 CRANKSHAFT SENSOR 2.4L

(4) Remove crankshaft sensor bolt (Fig. 9).

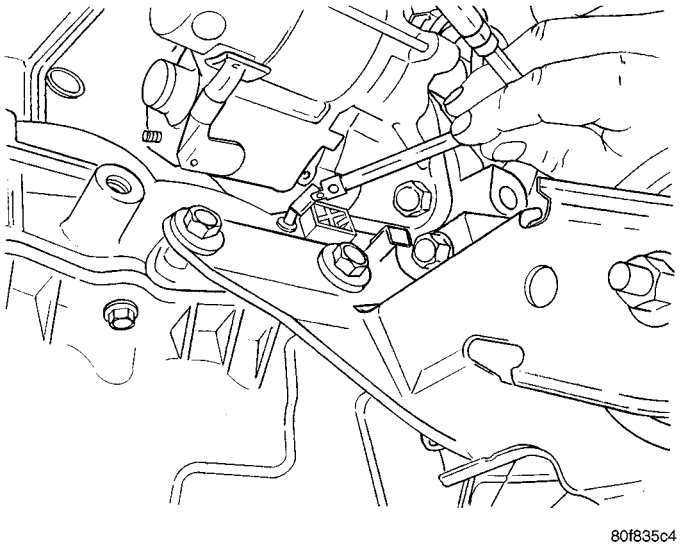

Fig. 9 CRANKSHAFT POSITION SENSOR LOCATION 2.4L

(5) Remove the crankshaft sensor.

INSTALLATION - 2.4L

(1) Install the crankshaft sensor.
(2) Install crankshaft sensor bolt and tighten.
(3) Connect the electrical connector (Fig. 8).
(4) Lower vehicle.
(5) Connect the negative battery cable.

ENGINE SPEED SENSOR

DESCRIPTION

The PCM receives a signal from the TCM to indicate vehicle speed on automatic transmission cars. On 4 cylinder Manual transmission cars (if equipped) vehicle, a dedicated vehicle speed sensor is connected to the PCM.On V-6 Manual transmission cars (if equipped) vehicle, the ABS module provides the signal to the PCM for vehicle speed.

OPERATION

The Transmission Control Module (TCM) supplies the road speed and distance traveled inputs to the PCM. From these inputs and the throttle position sensor input, the PCM determines when a deceleration condition occurs.

FUEL INJECTOR

DESCRIPTION

The injectors are positioned in the intake manifold or cylinder head with the nozzle ends directly above the intake valve port (Fig. 10).

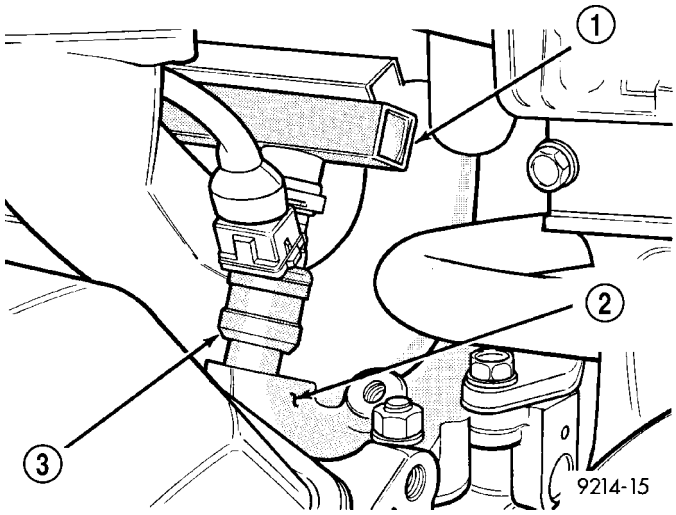

Fig. 10 Fuel Injector Location - Typical

1 - FUEL RAIL
2 - INTAKE MANIFOLD
3 - FUEL INJECTORS

FUEL INJECTOR (Continued)

OPERATION

The fuel injectors are 12 volt electrical solenoids (Fig. 11). The injector contains a pintle that closes off an orifice at the nozzle end. When electric current is supplied to the injector, the armature and needle move a short distance against a spring, allowing fuel to flow out the orifice. Because the fuel is under high pressure, a fine spray is developed in the shape of a hollow cone or two streams. The spraying action atomizes the fuel, adding it to the air entering the combustion chamber. Fuel injectors are not interchangeable between engines.

The PCM provides battery voltage to each injector through the ASD relay. Injector operation is controlled by a ground path provided for each injector by the PCM. Injector on-time (pulse-width) is variable, and is determined by the PCM processing all the data previously discussed to obtain the optimum injector pulse width for each operating condition. The pulse width is controlled by the duration of the ground path provided.

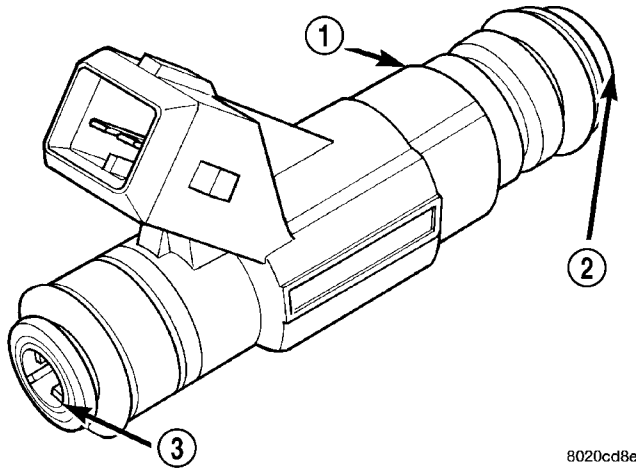

Fig. 11 FUEL INJECTOR - TYPICAL

1 - FUEL INJECTOR
2 - NOZZLE
3 - TOP (FUEL ENTRY)

REMOVAL

REMOVAL - 2.4L

The fuel rail must be removed first (Fig. 12). Refer to Fuel Rail Removal in this section.

(1) Disconnect injector wiring connector from injector.

(2) Position fuel rail assembly so that the fuel injectors are easily accessible (Fig. 13).

(3) Rotate injector and pull injector out of fuel rail. The clip will stay on the injector.

(4) Check injector O-ring for damage. If O-ring is damaged, it must be replaced. If injector is reused, a protective cap must be installed on the injector tip to prevent damage. Replace the injector clip if it is damaged.

(5) Repeat for remaining injectors.

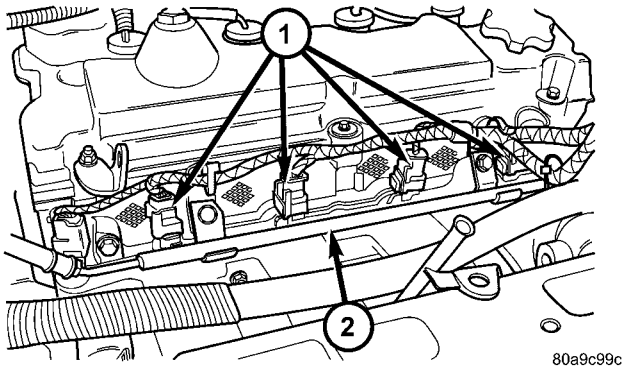

Fig. 12 FUEL RAIL AND INJECTORS 2.4L

1 - Fuel Injectors
2 - Fuel Rail

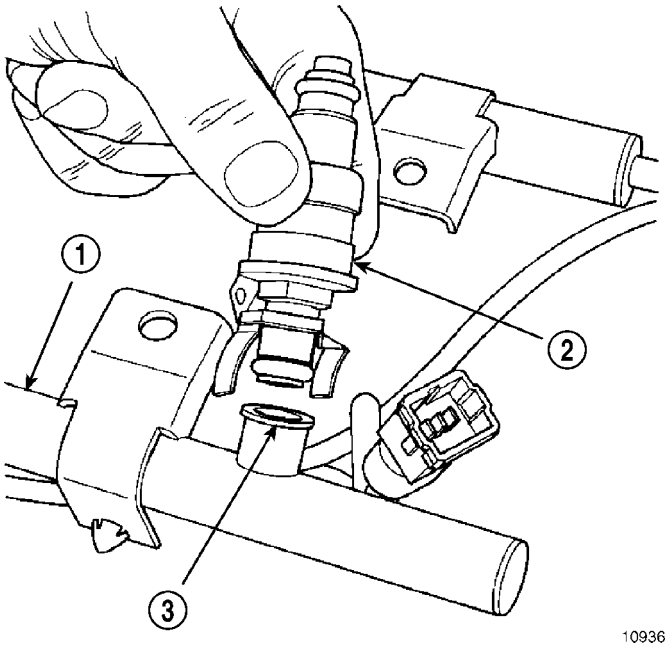

Fig. 13 FUEL INJECTOR AND RAIL TYPICAL

1 - FUEL RAIL ASSEMBLY
2 - FUEL INJECTOR
3 - FUEL RAIL RECEIVER

REMOVAL - 3.3/3.8L

(1) Disconnect the negative battery cable.

(2) Remove the Intake Manifold, (Refer to 9 - ENGINE/MANIFOLDS/INTAKE MANIFOLD - REMOVAL)

(3) Disconnect injector wiring connector from injector.

(4) Position fuel rail assembly so that the fuel injectors are easily accessible (Fig. 13).

FUEL INJECTOR (Continued)

(5) Rotate injector and pull injector out of fuel rail. The clip will stay on the injector.

(6) Check injector O-ring for damage. If O-ring is damaged, it must be replaced. If injector is reused, a protective cap must be installed on the injector tip to prevent damage. Replace the injector clip if it is damaged.

(7) Repeat for remaining injectors.

INSTALLATION

INSTALLATION - 2.4L

The fuel rail must be removed first. Refer to Fuel Injector Rail Removal in this section.

(1) Before installing an injector the rubber O-ring must be lubricated with a drop of clean engine oil to aid in installation.

(2) Install injector clip by sliding open end into the top slot of the injector. The edge of the receiver cup will slide into the side slots of clip.

(3) Install injector top end into fuel rail receiver cap. Be careful not to damage O-ring during installation (Fig. 14).

(4) Repeat steps for remaining injectors.

(5) Connect fuel injector wiring.

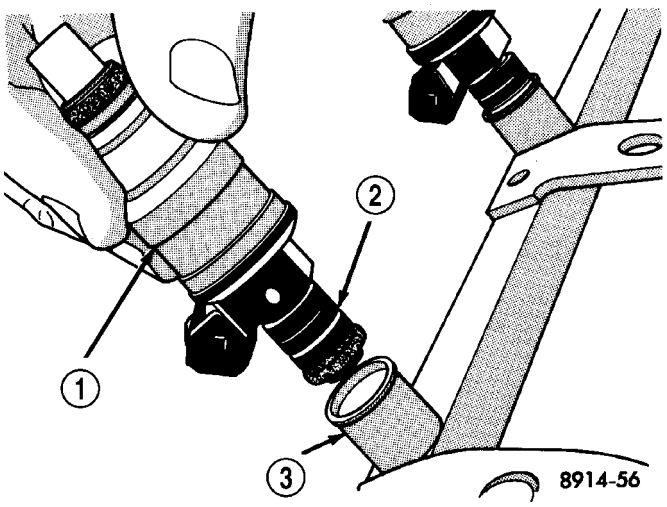

Fig. 14 SERVICING FUEL INJECTOR TYPICAL

1 - FUEL INJECTOR
2 - LOCKING SLOT
3 - FUEL RAIL RECEIVER CUP

INSTALLATION - 3.3/3.8L

(1) Before installing an injector the rubber O-ring must be lubricated with a drop of clean engine oil to aid in installation.

(2) Install injector clip by sliding open end into the top slot of the injector. The edge of the receiver cup will slide into the side slots of clip (Fig. 13).

(3) Install injector top end into fuel rail receiver cap. Be careful not to damage O-ring during installation (Fig. 13).

(4) Repeat steps for remaining injectors.

(5) Install fuel rail, refer to Fuel Rail in the Fuel Delivery section.

(6) Connect fuel injector wiring.

(7) Install the Intake Manifold, (Refer to 9 - ENGINE/MANIFOLDS/INTAKE MANIFOLD - INSTALLATION)

(8) Connect the negative battery cable.

FUEL PUMP RELAY

DESCRIPTION

The fuel pump relay is located in the PDC. The inside top of the PDC cover has a label showing relay and fuse location.

OPERATION

The fuel pump relay supplies battery voltage to the fuel pump. A buss bar in the Power Distribution Center (PDC) supplies voltage to the solenoid side and contact side of the relay. The fuel pump relay power circuit contains a fuse between the buss bar in the PDC and the relay. The fuse is located in the PDC. Refer to the Wiring Diagrams for circuit information.

The PCM controls the fuel pump relay by switching the ground path for the solenoid side of the relay on and off. The PCM turns the ground path off when the ignition switch is in the Off position. When the ignition switch is in the On position, the PCM energizes the fuel pump. If the crankshaft position sensor does not detect engine rotation, the PCM de-energizes the relay after approximately one second.

IDLE AIR CONTROL MOTOR

DESCRIPTION

The idle air control valve is mounted on the throttle body. The PCM operates the idle air control valve (Fig. 15) or (Fig. 16).

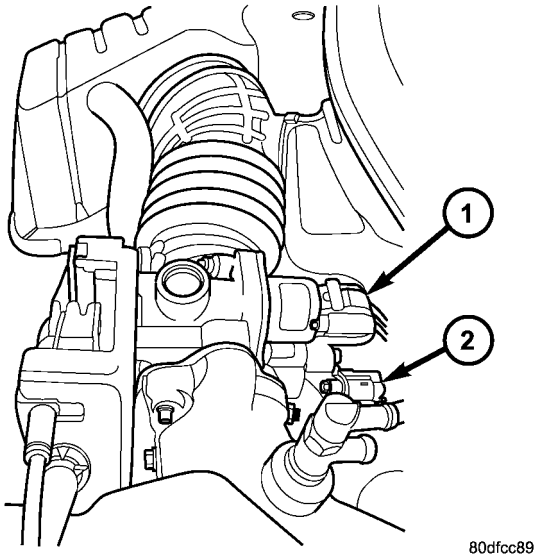

Fig. 15 TPS/IAC 2.4L

1 - Idle Air Control Valve
2 - Throttle Position Sensor

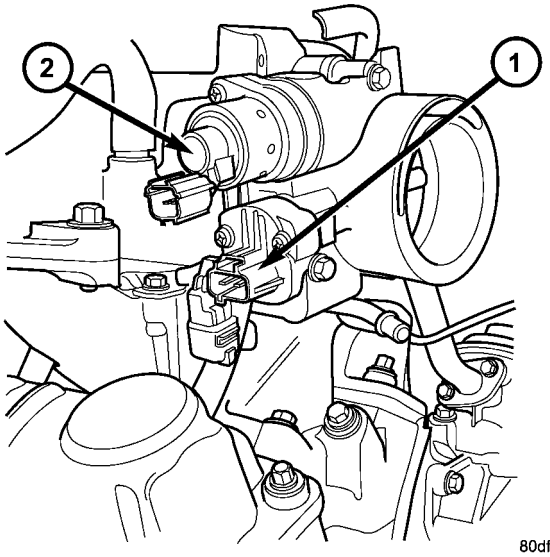

Fig. 16 TPS/IAC 3.3/3.8L

1 - Idle Air Control Valve
2 - Throttle Position Sensor

OPERATION

The PCM adjusts engine idle speed through the idle air control valve to compensate for engine load, coolant temperature or barometric pressure changes.

The throttle body has an air bypass passage that provides air for the engine during closed throttle idle. The idle air control valve regulates air flow through the bypass passage.

The PCM controls engine idle speed by adjusting the position of the idle air control valve. The adjustments are based on inputs the PCM receives. The inputs are from the throttle position sensor, crankshaft position sensor, coolant temperature sensor, MAP sensor, vehicle speed sensor and various switch operations (brake, park/neutral, air conditioning).

When engine rpm is above idle speed, the IAC is used for the following functions:

- Off-idle dashpot
- Deceleration air flow control
- A/C compressor load control (also opens the passage slightly before the compressor is engaged so that the engine rpm does not dip down when the compressor engages)

Target Idle

Target idle is determined by the following inputs:

- Gear position
- ECT Sensor
- Battery voltage
- Ambient/Battery Temperature Sensor
- VSS
- TPS
- MAP Sensor

REMOVAL

When servicing throttle body components, always reassemble components with new O-rings and seals where applicable. If assembly of component is difficult, a light coat of engine oil may be applied to the O-RINGS ONLY to aid assembly. Use care when removing hoses to prevent damage to hose or hose nipple.

(1) Disconnect negative cable from battery.

(2) Remove electrical connector from idle air control valve (Fig. 17).

(3) Remove idle air control valve mounting screw.

(4) Remove valve from throttle body. Ensure the O-rings is removed with the valve.

INSTALLATION

When servicing throttle body components, always reassemble components with new O-rings and seals where applicable. If assembly of component is difficult, **a light coat of engine oil may be applied to the O-RINGS ONLY (Fig. 18)** to aid assembly. Use care when removing hoses to prevent damage to hose or hose nipple.

(1) Carefully place idle air control motor into throttle body.

IDLE AIR CONTROL MOTOR (Continued)

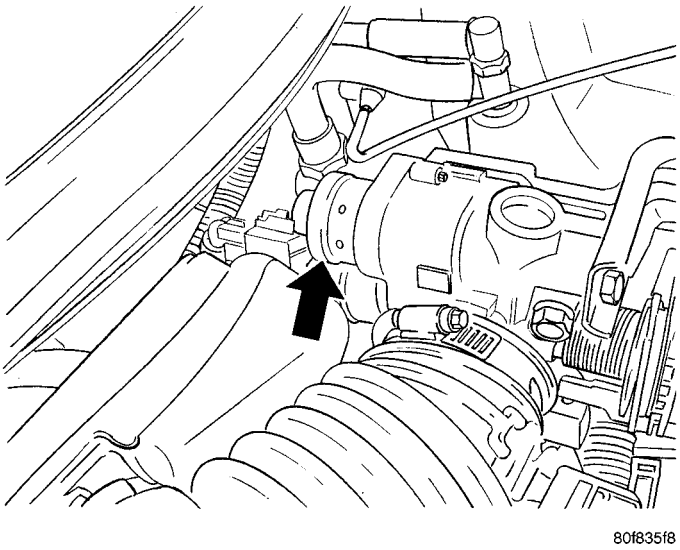

Fig. 17 IDLE AIR CONTROL VALVE LOCATION

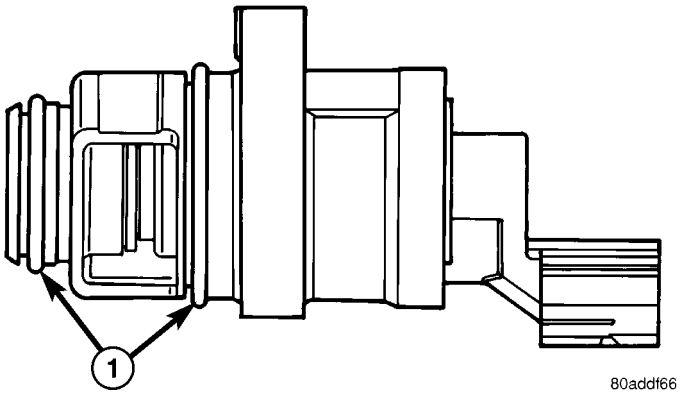

Fig. 18 O-RINGS

1 - O-rings

(2) Install mounting screw. Tighten screw to 7 N·m (62 in. lbs.) torque.

(3) Connect electrical connector to idle air control motor.

(4) Connect negative cable to battery.

INLET AIR TEMPERATURE SENSOR

DESCRIPTION

The IAT Sensor is a Negative Temperature Coefficient (NTC) Sensor that provides information to the PCM regarding the temperature of the air entering the intake manifold (Fig. 19).

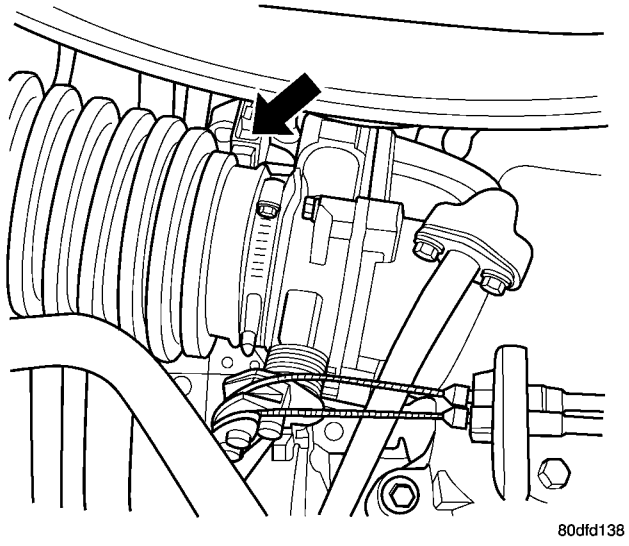

Fig. 19 3.3/3.8L IAT SENSOR

MAP SENSOR

DESCRIPTION

The MAP sensor (Fig. 20) or (Fig. 21) mounts to the intake manifold. The sensor is connects electrically to the PCM.

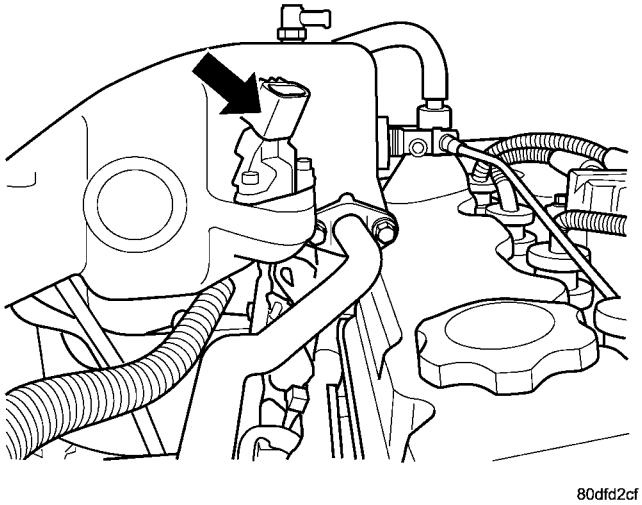

Fig. 20 MAP SENSOR - 2.4L

OPERATION

The MAP serves as a PCM input, using a silicon based sensing unit, to provide data on the manifold vacuum that draws the air/fuel mixture into the combustion chamber. The PCM requires this information to determine injector pulse width and spark advance. When MAP equals Barometric pressure, the pulse width will be at maximum.

MAP SENSOR (Continued)

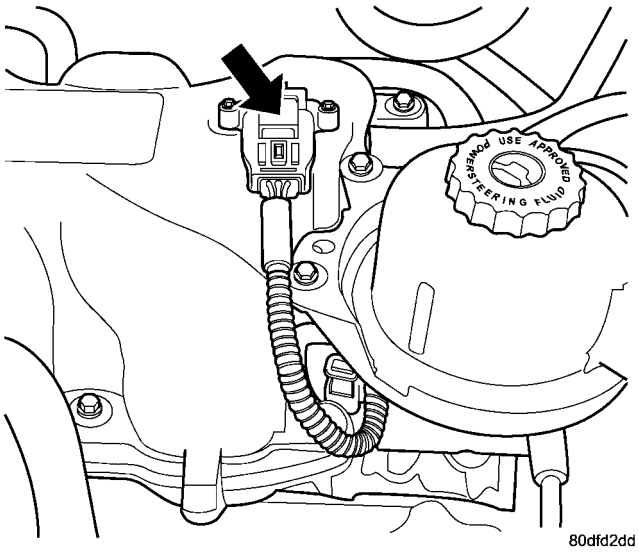

Fig. 21 MAP SENSOR - 3.3/3.8L

Also like the cam and crank sensors, a 5 volt reference is supplied from the PCM and returns a voltage signal to the PCM that reflects manifold pressure. The zero pressure reading is 0.5V and full scale is 4.5V. For a pressure swing of 0 — 15 psi the voltage changes 4.0V. The sensor is supplied a regulated 4.8 to 5.1 volts to operate the sensor. Like the cam and crank sensors ground is provided through the sensor return circuit.

The MAP sensor input is the number one contributor to pulse width. The most important function of the MAP sensor is to determine barometric pressure. The PCM needs to know if the vehicle is at sea level or is it in Denver at 5000 feet above sea level, because the air density changes with altitude. It will also help to correct for varying weather conditions. If a hurricane was coming through the pressure would be very, very low or there could be a real fair weather, high pressure area. This is important because as air pressure changes the barometric pressure changes. Barometric pressure and altitude have a direct inverse correlation, as altitude goes up barometric goes down. The first thing that happens as the key is rolled on, before reaching the crank position, the PCM powers up, comes around and looks at the MAP voltage, and based upon the voltage it sees, it knows the current barometric pressure relative to altitude. Once the engine starts, the PCM looks at the voltage again, continuously every 12 milliseconds, and compares the current voltage to what it was at key on. The difference between current and what it was at key on is manifold vacuum.

During key On (engine not running) the sensor reads (updates) barometric pressure. A normal range can be obtained by monitoring known good sensor in you work area.

As the altitude increases the air becomes thinner (less oxygen). If a vehicle is started and driven to a very different altitude than where it was at key On the barometric pressure needs to be updated. Any time the PCM sees Wide Open throttle, based upon TPS angle and RPM it will update barometric pressure in the MAP memory cell. With periodic updates, the PCM can make its calculations more effectively.

The PCM uses the MAP sensor to aid in calculating the following:

- Barometric pressure
- Engine load
- Manifold pressure
- Injector pulse-width
- Spark-advance programs
- Shift-point strategies (F4AC1 transmissions only, via the PCI bus)
- Idle speed
- Decel fuel shutoff

The PCM recognizes a decrease in manifold pressure by monitoring a decrease in voltage from the reading stored in the barometric pressure memory cell. The MAP sensor is a linear sensor; as pressure changes, voltage changes proportionately. The range of voltage output from the sensor is usually between 4.6 volts at sea level to as low as 0.3 volts at 26 in. of Hg. Barometric pressure is the pressure exerted by the atmosphere upon an object. At sea level on a standard day, no storm, barometric pressure is 29.92 in Hg. For every 100 feet of altitude barometric pressure drops .10 in. Hg. If a storm goes through it can either add, high pressure, or decrease, low pressure, from what should be present for that altitude. You should make a habit of knowing what the average pressure and corresponding barometric pressure is for your area.

REMOVAL

REMOVAL - 2.4L

(1) Disconnect the negative battery cable.

(2) Disconnect electrical connector and vacuum hose from MAP sensor (Fig. 20).

(3) Remove two screws holding sensor to the intake manifold.

REMOVAL - 3.3/3.8L

(1) Disconnect the negative battery cable.

(2) Remove vacuum hose and mounting screws from manifold absolute pressure (MAP) sensor (Fig. 21).

(3) Disconnect electrical connector from sensor. Remove sensor.

MAP SENSOR (Continued)

INSTALLATION

INSTALLATION - 2.4L

(1) Install sensor.
(2) Install two screws and tighten.
(3) Connect the electrical connector and vacuum hose to the MAP sensor (Fig. 20).
(4) Connect the negative battery cable.

INSTALLATION - 3.3/3.8L

(1) Install sensor (Fig. 21).
(2) Install screws and tighten to **PLASTIC MANIFOLD 1.7 N·m (15 in. lbs.) ALUMINUM MANIFOLD 3.3 N·m (30 in. lbs.)** .
(3) Connect the electrical connector to the sensor. Install vacuum hose.
(4) Connect the negative battery cable.

O2 SENSOR

DESCRIPTION

The upstream oxygen sensor threads into the outlet flange of the exhaust manifold (Fig. 22) or (Fig. 23).

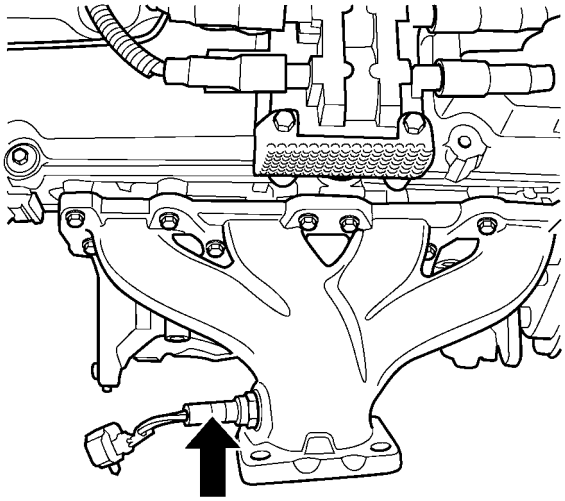

Fig. 22 O2 SENSOR UPSTREAM 1/1 - 2.4L

The downstream heated oxygen sensor threads into the outlet pipe at the rear of the catalytic convertor (Fig. 24).

OPERATION

A seperate upstream and downstream grounds are used on the NGC vehicles (4 Cyl.).

As vehicles accumulate mileage, the catalytic convertor deteriorates. The deterioration results in a less efficient catalyst. To monitor catalytic convertor

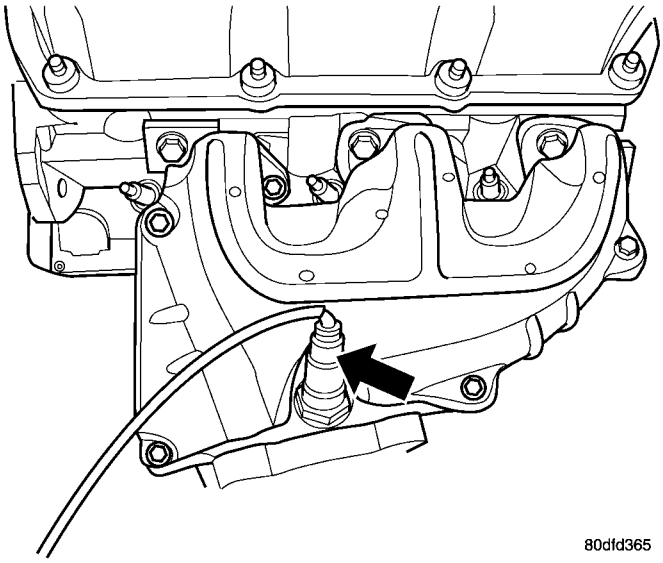

Fig. 23 O2 SENSOR UPSTREAM 1/1 - 3.3/3.8L

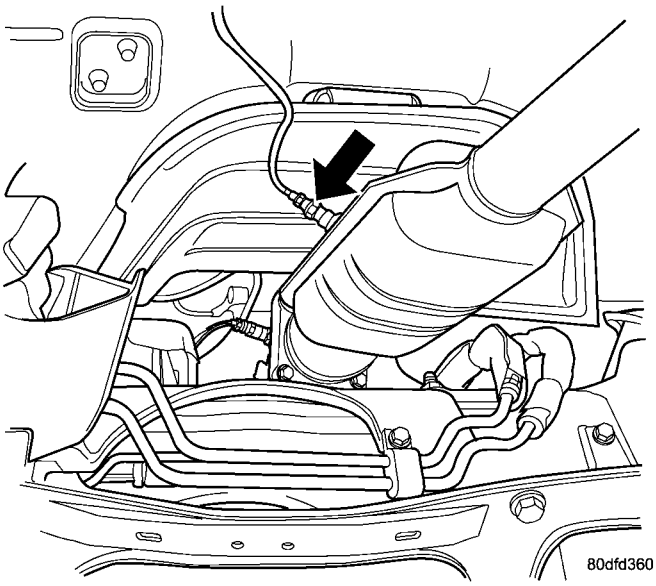

Fig. 24 O2 SENSOR DOWNSTREAM 1/2 - 2.4/3.3/3.8L

deterioration, the fuel injection system uses two heated oxygen sensors. One sensor upstream of the catalytic convertor, one downstream of the convertor. The PCM compares the reading from the sensors to calculate the catalytic convertor oxygen storage capacity and converter efficiency. Also, the PCM uses the upstream heated oxygen sensor input when adjusting injector pulse width.

When the catalytic converter efficiency drops below emission standards, the PCM stores a diagnostic trouble code and illuminates the malfunction indicator lamp (MIL).

The O2 sensors produce a constant 2.5 volts on NGC vehicles, depending upon the oxygen content of the exhaust gas. When a large amount of oxygen is

O2 SENSOR (Continued)

present (caused by a lean air/fuel mixture, can be caused by misfire and exhaust leaks), the sensors produces a low voltage. When there is a lesser amount of oxygen present (caused by a rich air/fuel mixture, can be caused by internal engine problems) it produces a higher voltage. By monitoring the oxygen content and converting it to electrical voltage, the sensors act as a rich-lean switch.

The oxygen sensors are equipped with a heating element that keeps the sensors at proper operating temperature during all operating modes. Maintaining correct sensor temperature at all times allows the system to enter into closed loop operation sooner. Also, it allows the system to remain in closed loop operation during periods of extended idle.

In Closed Loop operation the PCM monitors the O2 sensors input (along with other inputs) and adjusts the injector pulse width accordingly. During Open Loop operation the PCM ignores the O2 sensor input. The PCM adjusts injector pulse width based on preprogrammed (fixed) values and inputs from other sensors.

NGC Controller - Has a common ground for the heater in the O2S. 12 volts is supplied to the heater in the O2S by the NGC controller. Both the upstream and downstream O2 sensors for NGC are pulse width modulation (PWM). **NOTE**: When replacing an O2 Sensor, the PCM RAM memory must be cleared, either by disconnecting the PCM C-1 connector or momentarily disconnecting the Battery negative terminal. The NGC learns the characteristics of each O2 heater element and these old values should be cleared when installing a new O2 sensor. The customer may experience driveability issues if this is not performed.

UPSTREAM OXYGEN SENSOR

The input from the upstream heated oxygen sensor tells the PCM the oxygen content of the exhaust gas. Based on this input, the PCM fine tunes the air-fuel ratio by adjusting injector pulse width.

The sensor input switches from 2.5 to 3.5 volt, depending upon the oxygen content of the exhaust gas in the exhaust manifold. When a large amount of oxygen is present (caused by a lean air-fuel mixture), the sensor produces voltage as low as 2.5 volt. When there is a lesser amount of oxygen present (rich air-fuel mixture) the sensor produces a voltage as high as 3.5 volt. By monitoring the oxygen content and converting it to electrical voltage, the sensor acts as a rich-lean switch.

The heating element in the sensor provides heat to the sensor ceramic element. Heating the sensor allows the system to enter into closed loop operation sooner. Also, it allows the system to remain in closed loop operation during periods of extended idle.

In Closed Loop, the PCM adjusts injector pulse width based on the upstream heated oxygen sensor input along with other inputs. In Open Loop, the PCM adjusts injector pulse width based on preprogrammed (fixed) values and inputs from other sensors.

DOWNSTREAM OXYGEN SENSOR

The downstream heated oxygen sensor input is used to detect catalytic convertor deterioration. As the convertor deteriorates, the input from the downstream sensor begins to match the upstream sensor input except for a slight time delay. By comparing the downstream heated oxygen sensor input to the input from the upstream sensor, the PCM calculates catalytic convertor efficiency. Also used to establish the upstream O2 goal voltage (switching point).

REMOVAL

REMOVAL - UPSTREAM 1/1 - 2.4L

(1) Disconnect the negative battery cable.
(2) Raise and support the vehicle.
(3) Disconnect the electrical connector (Fig. 23).
(4) Use a socket such as the Snap-On® YA8875 or equivalent to remove the sensor
(5) When the sensor is removed, the threads must be cleaned with an 18 mm X 1.5 + 6E tap. If using the original sensor, coat the threads with Loctite 771–64 anti-seize compound or equivalent.

O2 SENSOR (Continued)

REMOVAL - UPSTREAM 1/1 - 3.3/3.8L

(1) Remove battery, refer to the Battery section for more information.

(2) Remove the battery tray, refer to the Battery section for more information.

(3) Disconnect the speed control vacuum harness from servo.

(4) Disconnect the electrical connector from servo.

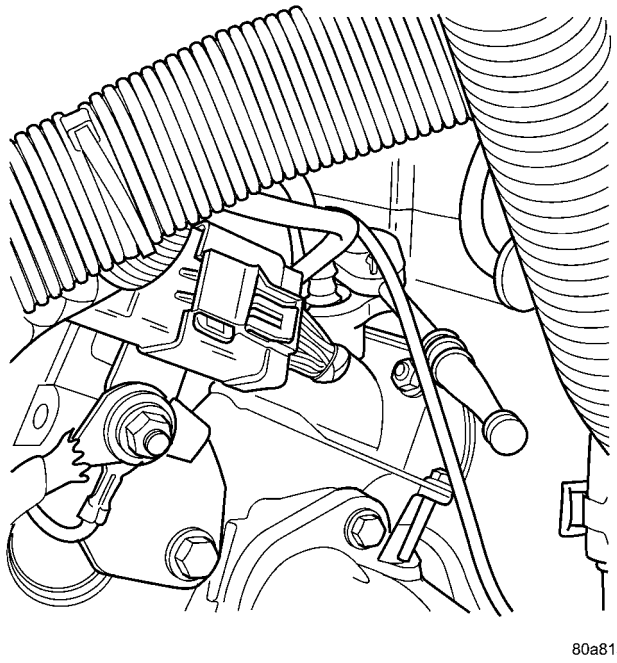

Fig. 25 O2 SENSOR 1/1

(5) Remove the speed control servo and bracket and reposition.

(6) Use a socket such as the Snap-On® YA8875 or equivalent to remove the sensor (Fig. 25).

(7) When the sensor is removed, the threads must be cleaned with an 18 mm X 1.5 + 6E tap. If using the original sensor, coat the threads with Loctite 771–64 anti-seize compound or equivalent.

REMOVAL - DOWNSTREAM 1/2 - 2.4/3.3/3.8L

(1) Disconnect the negative battery cable.

(2) Raise and support the vehicle.

(3) Disconnect the electrical connector (Fig. 26).

(4) Use a socket such as the Snap-On® YA8875 or equivalent to remove the sensor (Fig. 27).

(5) When the sensor is removed, the threads must be cleaned with an 18 mm X 1.5 + 6E tap. If using the original sensor, coat the threads with Loctite 771–64 anti-seize compound or equivalent.

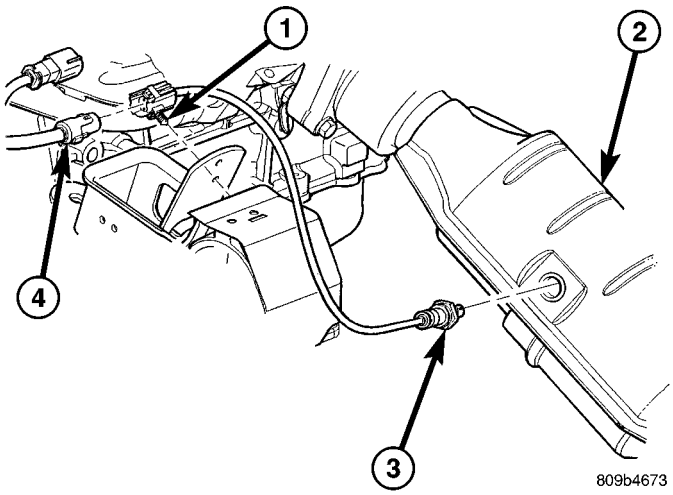

Fig. 26 Downstream Oxygen Sensor (1/2)

1 - OXYGEN SENSOR CONNECTOR
2 - CATALYTIC CONVERTER
3 - DOWNSTREAM OXYGEN SENSOR
4 - ENGINE HARNESS CONNECTOR

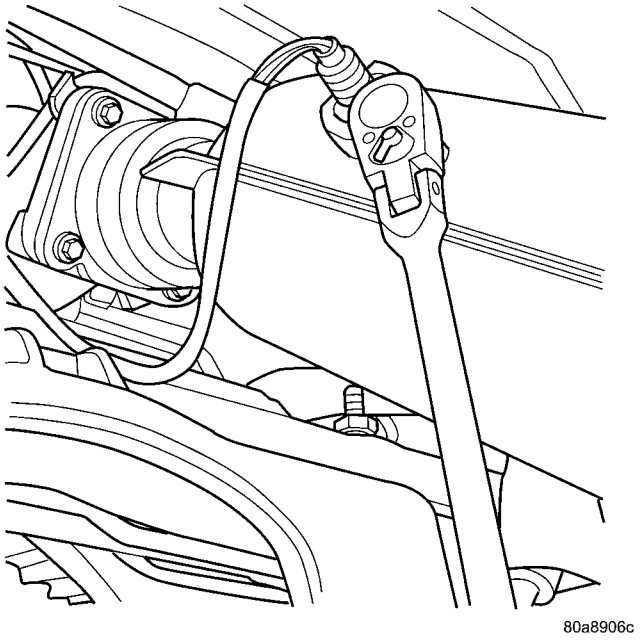

Fig. 27 DOWNSTREAM 2/1 O2 SENSOR

INSTALLATION

INSTALLATION - UPSTREAM 1/1 - 2.4L

The engines uses two heated oxygen sensors.

(1) After removing the sensor, the exhaust manifold threads must be cleaned with an 18 mm X 1.5 + 6E tap. If reusing the original sensor, coat the sensor threads with an anti-seize compound such as Loctite 771- 64 or equivalent. New sensors have compound on the threads and do not require an additional coating.

O2 SENSOR (Continued)

(2) Install sensor and tighten to 27 N·m (20 ft. lbs.) (Fig. 23).
(3) Connect the electrical connector for the O2 sensor and install onto bracket.
(4) Lower vehicle.
(5) Connect the negative battery cable.

INSTALLATION - UPSTREAM 1/1 - 3.3/3.8L

The engines uses two heated oxygen sensors.
(1) After removing the sensor, the exhaust manifold threads must be cleaned with an 18 mm X 1.5 + 6E tap. If reusing the original sensor, coat the sensor threads with an anti-seize compound such as Loctite 771- 64 or equivalent. New sensors have compound on the threads and do not require an additional coating.
(2) Install sensor and tighten to 27 N·m (20 ft. lbs.).
(3) Connect the electrical connector for the O2 sensor and install onto bracket.
(4) Connect the electrical connector for the speed control servo.
(5) Install the speed control servo and bracket refer to the Speed Control Servo for more information.
(6) Connect the speed control vacuum harness to servo.
(7) Install the battery tray, refer to the Battery section for more information.
(8) Install battery, refer to the Battery section for more information.

INSTALLATION DOWNSTREAM 2/1 - 2.4/3.3/3.8L

The O2S is located on the side of the catalytic converter.
Threads of new oxygen sensors are factory coated with anti-seize compound to aid in removal. **DO NOT add any additional anti-seize compound to the threads of a new oxygen sensor.**
(1) Install sensor and tighten to 27 N·m (20 ft. lbs.).
(2) Connect the electrical connector.
(3) Lower vehicle.
(4) Install the negative battery cable.

THROTTLE BODY

DESCRIPTION

The throttle body is located on the intake manifold (Fig. 28) or (Fig. 29). Fuel does not enter the intake manifold through the throttle body. Fuel is sprayed into the manifold by the fuel injectors.

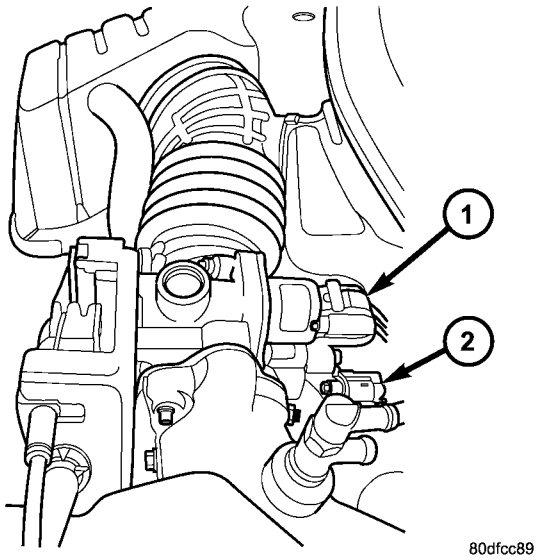

Fig. 28 IAC VALVE 2.4L

1 - Idle Air Control Valve
2 - Throttle Position Sensor

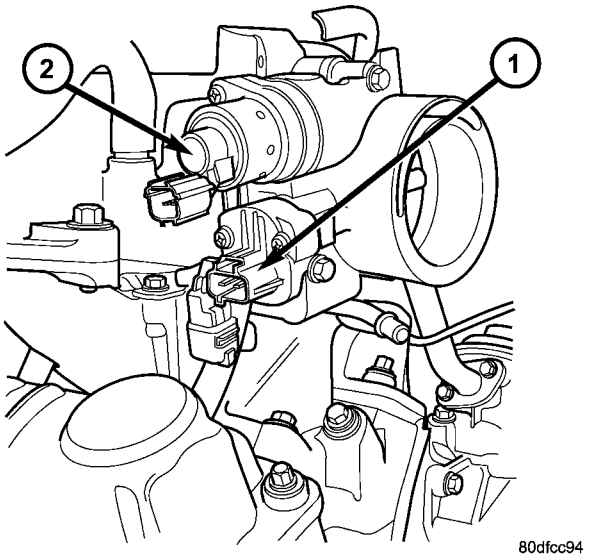

Fig. 29 IAC VALVE LOCATION 3.3/3.8L

1 - Idle Air Control Valve
2 - Throttle Position Sensor

OPERATION

Filtered air from the air cleaner enters the intake manifold through the throttle body. The throttle body contains an air control passage controlled by an Idle Air Control (IAC) motor. The air control passage is used to supply air for idle conditions. A throttle valve (plate) is used to supply air for above idle conditions.
Certain sensors are attached to the throttle body. The accelerator pedal cable, speed control cable are connected to the throttle body cam.

THROTTLE BODY (Continued)

A (factory adjusted) set screw is used to mechanically limit the position of the throttle body throttle plate. **Never attempt to adjust the engine idle speed using this screw.** All idle speed functions are controlled by the PCM.

REMOVAL

(1) Disconnect negative cable from battery cable.
(2) Remove air inlet to throttle body hose clamp.
(3) Remove throttle and the speed control (if equipped) cables from lever and bracket.
(4) Disconnect electrical connectors from the idle air control motor and throttle position sensor (TPS) (Fig. 28) or (Fig. 29).
(5) Remove throttle body to intake manifold attaching bolts.
(6) Remove throttle body and gasket.

INSTALLATION

(1) Install a new gasket, if required.
(2) Install throttle body.
(3) Tighten throttle body mounting bolts. The 2.4L to 28.2 N·m (250 ±50 in. lbs.) torque, The 3.3/3.8L to 11.6 N·m (105 ±20 in. lbs.) torque.
(4) Connect electrical connectors to the idle air control motor and throttle position sensor (TPS) (Fig. 28) or (Fig. 29).
(5) Install air inlet to throttle body hose clamp and tighten.
(6) Connect negative cable to battery cable.

THROTTLE CONTROL CABLE

REMOVAL

(1) Working from the engine compartment, hold the throttle body throttle lever in the wide open position.
(2) Remove the throttle cable from the throttle body cam.
(3) From inside the vehicle, hold up the pedal and remove the cable retainer and throttle cable from the upper end of the pedal shaft.
(4) Remove retainer clip from throttle cable and grommet at dash panel.
(5) From the engine compartment, pull the throttle cable and gromment out of the dash panel.
(6) Remove the throttle cable from throttle bracket by carefully compressing both retaining ears simultaneously then gently pull the throttle cable from throttle bracket or if it is the slide snap design you have to slide the locking tab out of the hole and then slide the cable assembly out of the bracket.

INSTALLATION

(1) From the engine compartment, push the housing end fitting and grommet into the dash panel.Install gromment into the dash panel.
(2) Install the cable housing (throttle body end) into the cable mounting bracket on the engine.
(3) From inside the vehicle, hold up the pedal and install throttle cable and cable retainer in the upper end of the pedal shaft.
(4) At the dash panel, install the cable retainer clip between the end of the throttle cable fitting and grommet
(5) From the engine compartment, rotate the throttle lever wide open and install the throttle cable.

THROTTLE POSITION SENSOR

DESCRIPTION

The throttle position sensor mounts to the side of the throttle body (Fig. 30) or (Fig. 31).The sensor connects to the throttle blade shaft. The TPS is a variable resistor that provides the Powertrain Control Module (PCM) with an input signal (voltage).

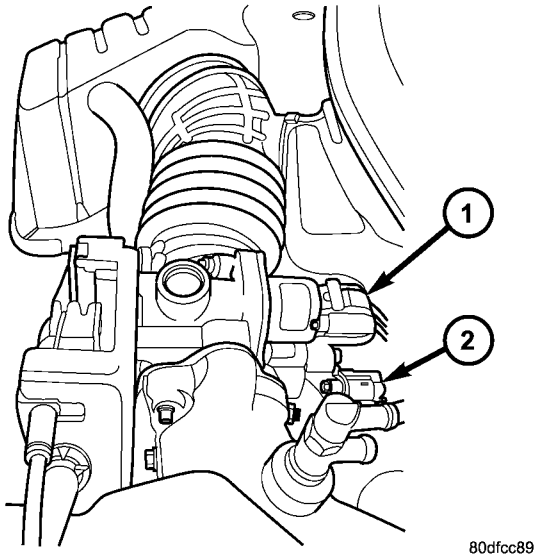

Fig. 30 Throttle Position Sensor—2.4L Engine

1 - Idle Air Control Valve
2 - Throttle Position Sensor

THROTTLE POSITION SENSOR (Continued)

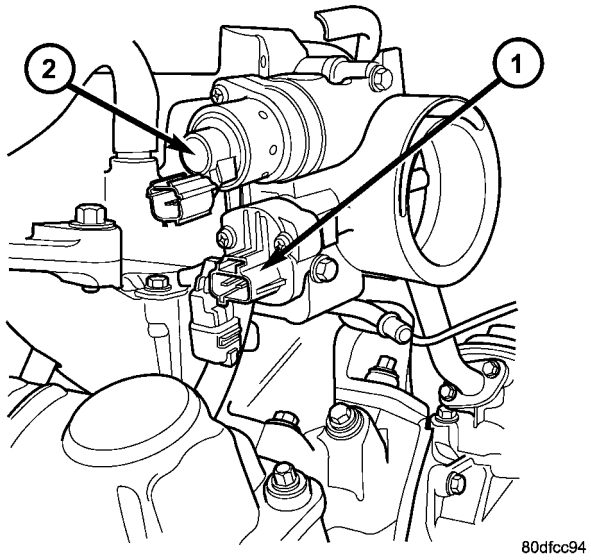

Fig. 31 Throttle Position Sensor—3.3/3.8L Engine

1 - Idle Air Control Valve
2 - Throttle Position Sensor

OPERATION

The signal represents throttle blade position. As the position of the throttle blade changes, the resistance of the TPS changes.

The PCM supplies approximately 5 volts to the TPS. The TPS output voltage (input signal to the powertrain control module) represents throttle blade position. The TPS output voltage to the PCM varies from approximately 0.6 volt at minimum throttle opening (idle) to a maximum of 4.5 volts at wide open throttle.

Along with inputs from other sensors, the PCM uses the TPS input to determine current engine operating conditions. The PCM also adjusts fuel injector pulse width and ignition timing based on these inputs.

REMOVAL - 3.3/3.8L

(1) Disconnect the negative battery cable.
(2) Remove the electrical connector from the Inlet Air Temperature sensor.
(3) Remove the air cleaner box lid. Remove hose from throttle body.
(4) Disconnect the electrical connector at TPS.
(5) Disconnect the electrical connector at IAC.
(6) Remove the throttle and speed control cables from throttle body.
(7) Remove 3 mounting bolts from throttle body.
(8) Remove throttle body.
(9) Disconnect the purge vacuum line from the throttle body.
(10) Remove TPS from throttle body.

INSTALLATION - 3.3/3.8L

(1) Install TPS to throttle body.
(2) Disconnect the purge vacuum line from the throttle body.
(3) Install throttle body.
(4) Install 3 mounting bolts from throttle body. Tighten bolts.
(5) Install the throttle and speed control cables to throttle body.
(6) Connect the electrical connector at TPS.
(7) Connect the electrical connector at IAC.
(8) Install the air cleaner box lid. Install hose to throttle body.
(9) Install the electrical connector to the Inlet Air Temperature sensor.
(10) Connect the negative battery cable.

STEERING

TABLE OF CONTENTS

	page
STEERING	
DESCRIPTION - POWER STEERING SYSTEM	1
OPERATION - POWER STEERING SYSTEM	1
DIAGNOSIS AND TESTING	
DIAGNOSIS AND TESTING - POWER STEERING SYSTEM FLOW AND PRESSURE TEST	1
DIAGNOSIS AND TESTING - STEERING SYSTEM DIAGNOSIS CHARTS	3
SPECIFICATIONS	
POWER STEERING FASTENER TORQUE	9
SPECIAL TOOLS	
POWER STEERING	9
COLUMN	10
GEAR	26
PUMP	36

STEERING

DESCRIPTION - POWER STEERING SYSTEM

This vehicle comes with power steering as standard equipment. The power steering system consists of these major components:

- POWER STEERING PUMP
- POWER STEERING GEAR
- POWER STEERING FLUID
- POWER STEERING FLUID COOLER (If Equipped)
- POWER STEERING FLUID RESERVOIR
- POWER STEERING FLUID SUPPLY HOSE
- POWER STEERING FLUID PRESSURE HOSE
- POWER STEERING FLUID RETURN HOSE

For information on the first two components, refer to their respective sections within this service manual group. Information on all other components can be found in POWER STEERING PUMP.

OPERATION - POWER STEERING SYSTEM

Turning of the steering wheel is converted into linear (side-to-side) travel through the meshing of the helical pinion teeth with the rack teeth within the steering gear. The lateral travel pushes and pulls the tie rods to change the direction of the vehicle's front wheels.

Power assist steering is provided by a belt driven rotary type pump. It directs fluid through power steering fluid hoses to the power steering gear where it is used to assist the driver's turning effort.

Manual steering control of the vehicle can be maintained if power steering assist is lost. However, under this condition, steering effort is significantly increased.

DIAGNOSIS AND TESTING

DIAGNOSIS AND TESTING - POWER STEERING SYSTEM FLOW AND PRESSURE TEST

ALL ENGINES

The following procedure is to be used to test the operation of the power steering system on this vehicle. This test will provide the flow rate of the power steering pump along with the maximum relief pressure. This test is to be performed to determine if the power steering pump or power steering gear is not functioning properly. The following flow and pressure test is performed using the Power Steering Analyzer Kit, Special Tool 6815 (Fig. 1), hoses, Special Tools 6905 and 6959, and fittings from adapter kit, Special Tool 6893.

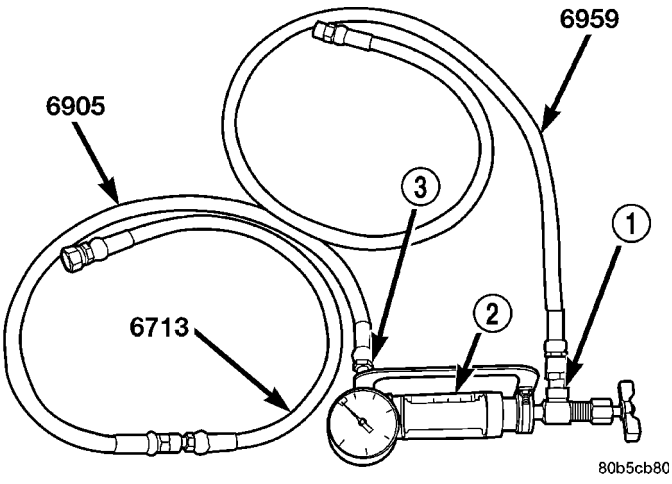

Fig. 1 Power Steering Analyzer With Hoses Installed

1 - OUTLET
2 - SPECIAL TOOL 6815
3 - INLET

STEERING (Continued)

Assemble hoses on Power Steering Analyzer, Special Tool 6815, as shown. Install Pressure Hose, Special Tool 6905 (in 6893 kit), in the inlet fitting on Power Steering Analyzer. Install Pressure Hose, Special Tool 6713 (in 6815 kit) on Pressure Hose, Special Tool 6905. Install Pressure Hose, Special Tool 6959, in the outlet fitting on Power Steering Analyzer.

Install the following adapters from Adapter Set, Special Tool 6893 (Fig. 2), on the analyzer hose ends: Install Adapter Fitting, Special Tool 6844, on Pressure Hose, Special Tool 6713. Install Adapter Fitting, Special Tool 6826, on Pressure Hose, Special Tool 6959.

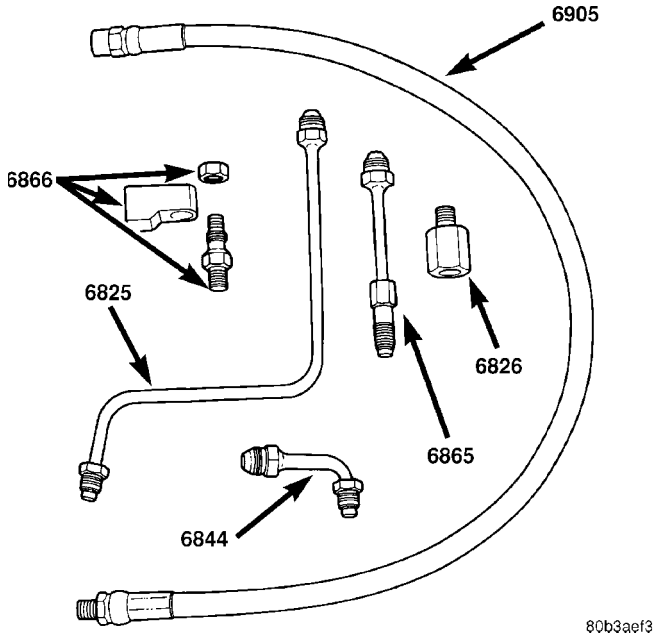

Fig. 2 Power Steering Analyzer Adapters 6893

CAUTION: To prevent personal injury, safety goggles should be worn at all times when performing any test procedures on the power steering pump or power steering gear.

The following procedure is to be used to test the operation of the power steering system on the vehicle.

(1) Check belt tension and adjust as necessary.

(2) Disconnect the power steering fluid pressure hose from the power steering pump (Fig. 3) (Fig. 4).

(3) Connect Adapter Fitting, Special Tool 6844, attached to pressure hose from inlet (gauge end) of Power Steering Analyzer to the pressure fitting on the power steering pump.

(4) Connect vehicle power steering fluid pressure hose to Adapter Fitting, Special Tool 6826, which should be already installed in the outlet hose (valve end) of Power Steering Analyzer.

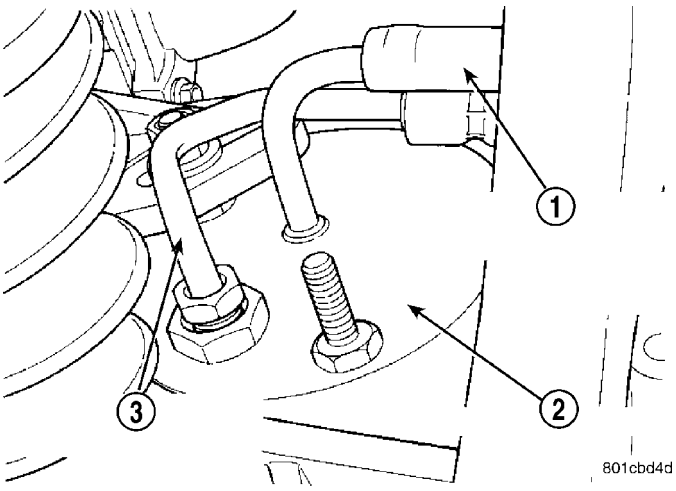

Fig. 3 Pressure Hose Connection To Power Steering Pump - 2.4L Engine

1 - POWER STEERING FLUID RETURN HOSE
2 - POWER STEERING PUMP
3 - POWER STEERING FLUID PRESSURE HOSE

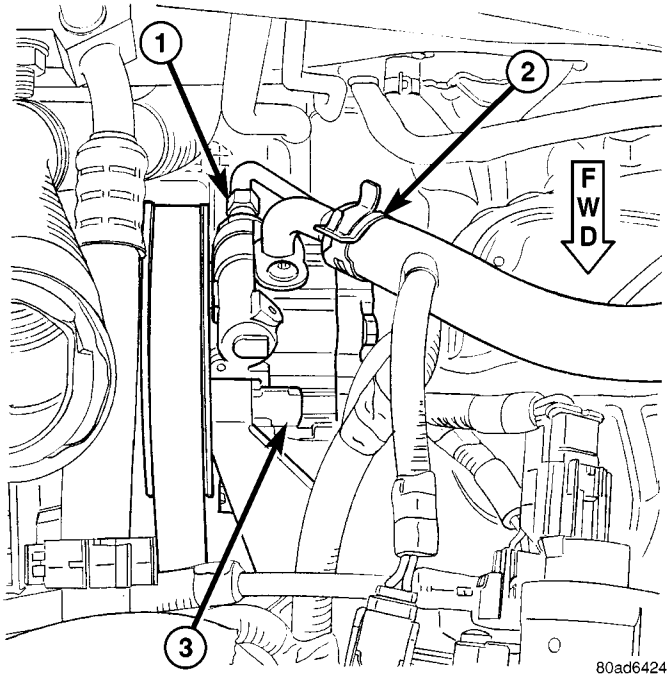

Fig. 4 Supply & Pressure Hoses At Pump - 3.3L/3.8L Engine

1 - PRESSURE HOSE AND FITTING
2 - SUPPLY HOSE AND CLAMP
3 - POWER STEERING PUMP

NOTE: During the next few steps, do not steer vehicle as air will be forced into the steering gear.

(5) Completely open valve on Power Steering Analyzer.

STEERING (Continued)

(6) Start engine and let idle just long enough to circulate power steering fluid through the analyzer and hoses. Shut off engine.

(7) Check power steering fluid level and add fluid as necessary. Start engine again and let idle until the air is out of the fluid.

(8) Gauge should read below 300 psi (2068 kPa). If above, inspect the hoses for restrictions and repair as necessary. The initial pressure should be in the range of 100-275 psi (689-1896 kPa) depending on fluid temperature. The flow meter should read above 1.5 GPM.

CAUTION: The following test procedure involves testing maximum pump pressure output and flow control valve operation. Do not leave valve closed for more than four seconds as the pump could be damaged.

NOTE: Power steering pump maximum pressure for 2.4L engines is 1,200 – 1,350 psi (8,274 – 9,308 kPa). Power steering pump maximum pressure for all other engines is 1,400 – 1,500 psi (9,653 – 10,342 kPa).

(9) Close analyzer valve fully three times and record highest pressure indicated each time. All three readings must be within specifications. If any of the three power steering pump pressures are above or below specifications, replace pump. (Refer to 19 - STEERING/PUMP - REMOVAL)

CAUTION: Do not force the steering to operate against the stops for more than 4 seconds at a time because pump damage can result.

(10) Once the pump has been verified as working correctly, completely open the valve on the Power Steering Analyzer. Turn the steering wheel to the extreme left until the stop in the steering gear is met. Hold it there for 2–4 seconds, then release it. Now turn the steering wheel to the right until the right stop is met. Hold it there for 2–4 seconds, then release it. Record the stabilized pressure at each position. Compare the recorded readings to the specifications. If the output pressures are not within 100 psi (689 kPa) of one another against either stop or are below specifications, the steering gear is leaking internally and must be replaced. (Refer to 19 - STEERING/GEAR - REMOVAL)

DIAGNOSIS AND TESTING - STEERING SYSTEM DIAGNOSIS CHARTS

NOTE: There are three diagnosis charts following that cover POWER STEERING NOISE, STEERING WHEEL FEEL, and POWER STEERING FLUID.

POWER STEERING NOISE

CONDITION	POSSIBLE CAUSES	CORRECTION
OBJECTIONABLE HISS OR WHISTLE*	1. Damaged or mispositioned steering column shaft/coupling dash panel seal.	1. Reposition or replace steering column shaft/coupling dash panel seal.
	2. Mis-routed power steering hose.	2. Check routing of power steering hoses. Ensure hoses do not come in unwanted contact with other components and objects.
	3. Noisy valve in power steering gear.	3. Replace power steering gear.
RATTLE OR EXCESSIVE CLUNK**	1. Power steering gear loose on front suspension crossmember.	1. Inspect power steering gear mounting bolts. Replace as necessary. Tighten to the specified torque.
	2. Front suspension crossmember mounting fasteners loose at frame.	2. Tighten the front suspension crossmember mounting fasteners to the specified torque.
	3. Loose tie rod (outer or inner).	3. Check tie rod pivot points for wear. Replace worn/loose parts as required.

STEERING (Continued)

CONDITION	POSSIBLE CAUSES	CORRECTION
	4. Loose lower control arm mounting bolts at front suspension crossmember.	4. Tighten control arm mounting bolts to the specified torques.
	5. Lower control arm pivot bushing worn.	5. Replace lower control arm pivot bushing.
	6. Loose strut assembly mounting fasteners at tower or knuckle.	6. Tighten strut assembly fasteners to the specified torque.
	7. Power steering fluid hose touching the body of the vehicle.	7. Adjust hose to proper position by loosening, repositioning, and tightening attachments to specified torque. Do not bend tubing.
	8. Damaged front suspension crossmember.	8. Replace front suspension crossmember.
	9. Stabilizer bar link ball joints worn.	9. Replace stabilizer bar link.
	10. Lug nuts loose.	10. Tighten lug nuts to specifications.
	11. Excessive Wheel bearing free-play.	11. Verify correct halfshaft hub nut torque. Replace hub and bearing if torque is okay.
	12. Internal power steering gear noise.	12. Replace power steering gear.
POPPING NOISE	1. Worn outer tie rod.	1. Check ball joint for free-play; Replace outer tie rod.
	2. Loose inner tie rod.	2. Replace power steering gear.
CHIRP OR SQUEAL (POWER STEERING PUMP)	1. Loose power steering pump drive belt.	1. Check and adjust power steering pump drive belt to specifications or replace automatic tensioner where applicable. Replace belt if worn or glazed.
	2. Malfuctioning belt auto-tensioner	2. Replace belt auto-tensioner.
WHINE, GROWL, MOAN OR GROAN (POWER STEERING PUMP)***	1. Low fluid level.	1. Fill power steering fluid reservoir to proper level and check for leaks (make sure all air is bled from the system fluid).
	2. Power steering hose touching vehicle body or frame.	2. Adjust hose to proper position by loosening, repositioning, and tightening fitting to specified torque. Do not bend tubing. Replace hose if damaged.
	3. Extremely low ambient temperature.	3. Some noise can be expected, but will go away as vehicle warms. Replace pump if noise is excessive.
	4. Extreme wear of power steering pump internal components.	4. Replace power steering pump and flush system as necessary.

STEERING (Continued)

CONDITION	POSSIBLE CAUSES	CORRECTION
SUCKING AIR SOUND	1. Loose clamp on power steering fluid return hose.	1. Tighten or replace hose clamp.
	2. Missing O-Ring on power steering hose connection.	2. Inspect connection and replace O-Ring as required.
	3. Low power steering fluid level.	3. Fill power steering fluid reservoir to proper level and check for leaks.
	4. Loose clamp on fluid supply hose.	4. Tighten or replace hose clamp.
SQUEAK OR RUBBING SOUND	1. Steering column shroud rubbing.	1. Realign shrouds as necessary.
	2. Steering column shaft rubbing.	2. Move or realign item rubbing shaft.
	3. Clockspring noisy.	3. Remove clockspring. Reinstall wheel. If noise is gone, replace clockspring.
	4. Seal lubrication inadequate.	4. Lube seal (if external).
	5. Steering gear internally noisy.	5. Replace steering gear (if no other cause can be found).
SCRUBBING OR KNOCKING NOISE.	1. Incorrect tire or wheel size.	1. Replace incorrect size tire or wheel with size used as original equipment.
	2. Interference between steering gear and other vehicle components.	2. Check for bent or misaligned components and correct as necessary.
	3. Steering gear internal stops worn excessively allowing tires to be steered excessively far.	3. Replace steering gear.

*** NOTE: There is some noise in all power steering systems. One of the most common is a hissing sound evident when turning the steering wheel when at a standstill or when parking and the steering wheel is at the end of its travel. Hiss is a very high frequency noise similar to that experienced while slowly closing a water tap. The noise is present in every valve and results when high velocity fluid passes valve orifice edges. There is no relationship between this noise and the performance of the steering system.**

**** NOTE: A light clunk may be felt or heard during steering wheel reversal while vehicle is stationary. This results from internal steering gear rack movement at the bushings and in no way affects the performance of the steering system. This movement may be felt in the steering components during steering wheel reversal.**

***** NOTE: Power steering pump growl/moan/groan results from the development of high pressure fluid flow. Normally this noise level should not be high enough to be objectionable.**

STEERING (Continued)

STEERING WHEEL FEEL

CONDITION	POSSIBLE CAUSES	CORRECTION
STEERING WHEEL/ COLUMN CLICKING, CLUNKING OR RATTLING.	1. Loose steering coupling pinch bolt.	1. Replace pinch bolt and torque to specifications.
	2. Steering column bearings.	2. Replace steering column.
	3. Excessive intermediate shaft coupling free-play.	3. Replace intermediate shaft.
STEERING WHEEL HAS FORE AND AFT LOOSENESS.	1. Steering wheel retaining nut not properly tightened and torqued.	1. Tighten the steering wheel retaining nut to its specified torque.
	2. Steering column lower bearing spring retainer slipped on steering column shaft.	2. Replace steering column.
	3. Loose steering column to instrument panel fasteners.	3. Tighten fasteners to specified torque.
STEERING WHEEL, DASH OR VEHICLE VIBRATES DURING LOW SPEED OR STANDSTILL STEERING MANEUVERS.	1. Air in the fluid of the power steering system.	1. Bleed air from system following the power steering pump initial operation service procedure.*
	2. Tires not properly inflated.	2. Inflate tires to the specified pressure.
	3. Excessive engine vibration.	3. Ensure that the engine is tuned properly.
	4. Loose tie rod end jam nut.	4. Tighten the inner to outer tie rod jam nut to the specified torque.
	5.Overcharged air conditioning system.	5.Check air conditioning pump head pressure and correct as necessary.
	6. Grounded engine mount.	6. Repair as necessary.
	7. Loose outer tie rod.	7. Replace outer tie rod.
STEERING CATCHES, SURGES OR STICKS IN CERTAIN POSITIONS OR IS DIFFICULT TO TURN. ***	1. Low power steering fluid level.	1. Fill power steering fluid reservoir to specified level and check for leaks.
	2. Tires not inflated to specified pressure.	2. Inflate tires to the specified pressure.
	3. Lack of lubrication in front lower control arm ball joints.	3. Lubricate ball joints if ball joints are not a lubricated-for-life type ball joint. If ball joint is a lubricated-for-life ball joint, replace ball joint.
	4. Worn or binding lower control arm ball joint.	4. Replace lower control arm ball joint.
	5. Lack of lubrication in steering gear outer tie rod ends.	5. Lubricate tie rod ends if they are not a lubricated-for-life type. If tie rod end is a lubricated-for-life type, replace tie rod end.

STEERING (Continued)

CONDITION	POSSIBLE CAUSES	CORRECTION
	6. Loose power steering pump drive belt.	6. Tighten the power steering pump drive belt to specifications or replace automatic tensioner where applicable. If drive belt is worn or glazed, replace belt.
	7. Faulty power steering pump (Perform Power Steering Flow and Pressure Test).	7. Replace power steering pump.
	8. Faulty power steering gear (Perform Power Steering Flow and Pressure Test).	8. Replace power steering gear.
	9. Excessive friction in steering column or intermediate shaft/coupler.	9. Isolate and correct condition.
	10. Excessive friction in power steering gear.	10. Replace power steering gear.
	11. Worn or binding seat and bearing in front strut assembly.	11. Replace seat and bearing in front strut assembly.
STEERING WHEEL DOES NOT RETURN TO CENTER POSITION.	1. Tires not inflated properly.	1. Inflate tires to specified pressure.
	2. Improper front wheel alignment.	2. Check and adjust wheel alignment as necessary.
	3. Lack of lubrication causing binding in front lower control arm ball joints.	3. Lubricate ball joints if ball joints are not a lubricated for life type of ball joint, then inspect ball joint for wear, replace lower control arm as necessary. If ball joint is a lubricated for life ball joint, replace lower control arm ball joint.
	4. Steering column coupling joints misaligned.	4. Realign steering column coupling joints.
	5. Steering wheel rubbing.**	5. Adjust steering column shrouds to eliminate rubbing condition.
	6. Damaged, mispositioned or unlubricated steering column coupler to dash seal.**	6. Replace, reposition, or lubricate dash seal.
	7. Binding mount bearing in front strut assembly.	7. Replace mount bearing in front strut assembly.
	8. Binding shaft bearing in steering column.	8. Replace the steering column.
	9. Excessive friction in steering column coupling.	9. Replace steering column coupling.
	10. Excessive friction in power steering gear.	10. Replace power steering gear.

STEERING (Continued)

CONDITION	POSSIBLE CAUSES	CORRECTION
EXCESSIVE STEERING WHEEL KICKBACK OR TOO MUCH STEERING WHEEL FREE PLAY.	1. Air in the fluid of the power steering system.	1. Bleed air from system following the the power steering pump initial operation service procedure.*
	2. Power steering gear loose on cradle/crossmember.	2. Inspect power steering gear mounting bolts. Replace as necessary. Tighten to the specified torque.
	3. Steering column coupling or intermediate shaft worn, broken or loose.	3. Replace steering column coupling or intermediate shaft.
	4. Free play in steering column.	4. Check all components of the steering column and repair or replace as required.
	5. Worn lower control arm ball joints.	5. Replace lower control arm ball joints as required.
	6. Loose steering knuckle-to-ball joint stud pinch bolt.	6. Inspect pinch bolt, replace as necessary, and tighten to specified torque.
	7. Front wheel bearing loose or worn.	7. Replace hub and bearing as necessary.
	8. Loose outer tie rod end.	8. Replace outer tie rod end that has excessive free play.
	9. Loose inner tie rod.	9. Replace power steering gear.
	10. Defective steering gear rotary valve.	10. Replace power steering gear.

*** NOTE: Steering shudder can be expected in new vehicles and vehicles with recent steering system repairs. Shudder should dissipate after the vehicle has been driven several weeks.**

**** NOTE: To evaluate this condition, it may be necessary to disconnect the coupling at the base of the steering column. Turn the steering wheel and feel or listen for internal rubbing in steering column. To avoid damaging the column clockspring, note the following. Before disconnecting coupling, place tires in the straight-ahead position and center steering wheel. Once disconnected, DO NOT rotate steering wheel more than one revolution in either direction and place steering wheel in original location before reconnecting coupling. If this position is lost, the steering column clockspring must be recentered following the procedure found within the procedure for steering column installation in the steering column section.**

***** NOTE: Increased low speed or stationary steering effort can be expected if the steering fluid is at a high temperature. High fluid temperature usually results from high engine rpm due to trailer towing, ascending grades, or racing the engine for prolonged periods of time.**

POWER STEERING FLUID

CONDITION	POSSIBLE CAUSES	CORRECTION
LOW FLUID LEVEL WITH VISIBLE LEAK.	1. Loose power steering hose fittings.	1. Tighten the fitting to its specified torque.
	2. Damaged or missing fitting seal, gasket, or O-ring.	2. Replace as necessary.
	3. Power steering component leaking.	3. Repair or replace the leaking component as required.

STEERING (Continued)

CONDITION	POSSIBLE CAUSES	CORRECTION
AERATED FLUID.*	1. Low fluid level. 2. Air leak at supply hose, power steering fluid reservoir or pump. 3. Cracked power steering pump housing.	1. Fill power steering fluid reservoir to proper level. 2. Inspect for proper sealing. Repair as necessary. 3. Replace the power steering pump.
RESERVOIR FLUID OVERFLOW AND FLUID THAT IS MILKY IN COLOR	1. Water contamination of power steering fluid.	1. Drain the power steering fluid from the system. Flush the system with fresh clean power steering fluid, drain, then refill to the proper level.

*** NOTE: Extremely cold temperatures may cause power steering fluid aeration. Aeration should subside as fluid warms.**

SPECIFICATIONS

POWER STEERING FASTENER TORQUE

DESCRIPTION	TORQUE
Power Steering Pump:	
Flow Control Valve Pressure Fitting	75 N·m (55 ft. lbs.)
Mounting Bolts	54 N·m (40 ft. lbs.)
Rear Bracket To Engine Mounting Bolts	54 N·m (40 ft. lbs.)
Steering Gear:	
Mounting Bolt - Size-M14	183 N·m (135 ft. lbs.)
Mounting Bolts - Size-M12	95 N·m (70 ft. lbs.)
Tie Rod Steering Knuckle Nut	75 N·m (55 ft. lbs.)
Tie Rod Jam Nut	75 N·m (55 ft. lbs.)
Coupling Pinch Bolt	28 N·m (250 in. lbs.)
Power Steering Fluid Hoses:	
Hose Tube Nuts	31 N·m (275 in. lbs.)
Routing Bracket Bolts	23 N·m (200 in. lbs.)

SPECIAL TOOLS

POWER STEERING

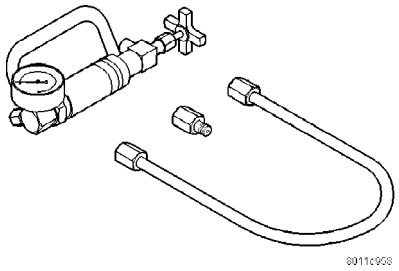

Power Steering Analyzer 6815

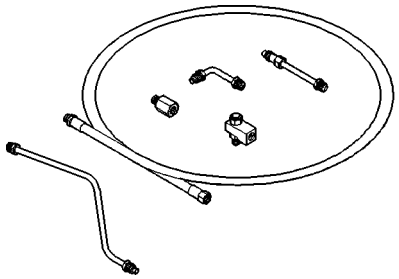

Adapters, Power Steering Analyzer 6893

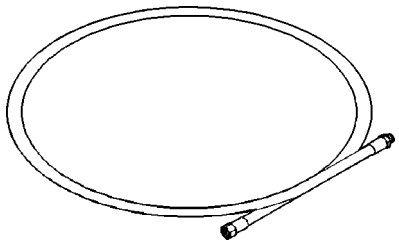

Hose, Power Steering Analyzer 6959

COLUMN

TABLE OF CONTENTS

	page
COLUMN	
DESCRIPTION - STEERING COLUMN	10
WARNING	
WARNINGS AND CAUTIONS	10
DIAGNOSIS AND TESTING - STEERING COLUMN	11
REMOVAL	11
INSTALLATION	16
SPECIFICATIONS	
COLUMN FASTENER TORQUE	17
IGNITION SWITCH	
REMOVAL	17
INSTALLATION	19
KEY/LOCK CYLINDER	
DESCRIPTION	20
OPERATION	20
REMOVAL	20
INSTALLATION	20
SHROUD - LOWER	
REMOVAL	21
INSTALLATION	21
SHROUD - UPPER	
REMOVAL	22
INSTALLATION	22
STEERING WHEEL	
REMOVAL	23
INSTALLATION	24

COLUMN

DESCRIPTION - STEERING COLUMN

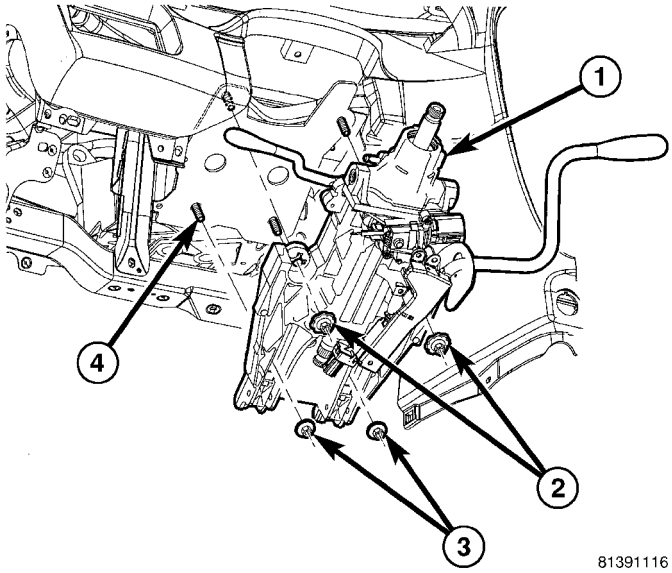

Fig. 1 Steering Column

1 - STEERING COLUMN
2 - UPPER MOUNTING NUTS
3 - LOWER MOUNTING NUTS
4 - MOUNTING STUDS

The steering column has been designed to be serviced as a complete assembly (Fig. 1) except for the following serviceable components:

- Key cylinder
- Ignition switch
- Multi-function switch
- Clockspring
- Halo
- Speed control switches
- Driver airbag
- Trim shrouds
- Steering wheel
- Intermediate shaft

These components of the steering column can be serviced without requiring removal of the steering column from the vehicle.

WARNING

WARNINGS AND CAUTIONS

(Refer to 8 - ELECTRICAL/RESTRAINTS - WARNING)

WARNING: BEFORE BEGINNING ANY SERVICE PROCEDURES THAT INVOLVES REMOVING THE AIR BAG. REMOVE AND ISOLATE THE NEGATIVE (-) BATTERY CABLE (GROUND) FROM THE VEHICLE BATTERY. THIS IS THE ONLY SURE WAY TO DISABLE THE AIR BAG SYSTEM. FAILURE TO DO THIS COULD RESULT IN ACCIDENTAL AIR BAG DEPLOYMENT AND POSSIBLE PERSONAL INJURY.

COLUMN (Continued)

WARNING: THE AIR BAG SYSTEM IS A SENSITIVE, COMPLEX ELECTRO-MECHANICAL UNIT. BEFORE ATTEMPTING TO DIAGNOSE, REMOVE OR INSTALL THE AIR BAG SYSTEM COMPONENTS YOU MUST FIRST DISCONNECT AND ISOLATE THE BATTERY NEGATIVE (GROUND) CABLE. THEN WAIT TWO MINUTES FOR THE SYSTEM CAPACITOR TO DISCHARGE. FAILURE TO DO SO COULD RESULT IN ACCIDENTAL DEPLOYMENT OF THE AIR BAG AND POSSIBLE PERSONAL INJURY. THE FASTENERS, SCREWS, AND BOLTS, ORIGINALLY USED FOR THE AIR BAG COMPONENTS, HAVE SPECIAL COATINGS AND ARE SPECIFICALLY DESIGNED FOR THE AIR BAG SYSTEM. THEY MUST NEVER BE REPLACED WITH ANY SUBSTITUTES. ANYTIME A NEW FASTENER IS NEEDED, REPLACE WITH THE CORRECT FASTENERS PROVIDED IN THE SERVICE PACKAGE OR FASTENERS LISTED IN THE PARTS BOOKS.

WARNING: SAFETY GOGGLES SHOULD BE WORN AT ALL TIMES WHEN WORKING ON STEERING COLUMNS.

CAUTION: Disconnect negative (ground) cable from the battery before servicing any column component.

CAUTION: Do not attempt to remove the pivot pins to disassemble the tilting mechanism. Damage will occur.

DIAGNOSIS AND TESTING - STEERING COLUMN

For diagnosis of conditions relating to the steering column, (Refer to 19 - STEERING - DIAGNOSIS AND TESTING).

REMOVAL

NOTE: Before proceeding, (Refer to 19 - STEERING/ COLUMN - WARNING)(Refer to 8 - ELECTRICAL/RESTRAINTS/DRIVER AIRBAG - REMOVAL).

(1) Make sure the front wheels of the vehicle are in the STRAIGHT AHEAD position before beginning the column removal procedure.

(2) Disconnect and isolate the negative (ground) cable from the battery. Wait at least two minutes for the airbag system reserve capacitor to discharge before beginning any steering column, instrument panel, or airbag system/component service.

WARNING: WHEN AN UNDEPLOYED AIRBAG IS TO BE REMOVED FROM THE VEHICLE, FIRST DISCONNECT AND ISOLATE THE BATTERY NEGATIVE (GROUND) CABLE. ALLOW THE AIRBAG SYSTEM RESERVE CAPACITOR TO DISCHARGE FOR TWO MINUTES BEFORE BEGINNING ANY AIRBAG SYSTEM OR COMPONENT SERVICE. PERSONAL INJURY MAY RESULT IF THIS PROCEDURE IS NOT FOLLOWED.

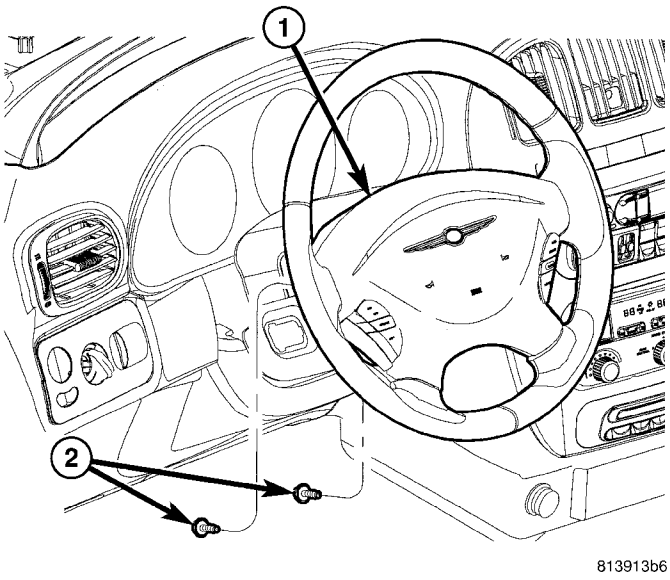

Fig. 2 Driver Airbag Mounting

1 - DRIVER AIRBAG
2 - MOUNTING SCREWS

(3) Remove the driver airbag mounting screws (Fig. 2).

(4) Lift the airbag from its mount and disconnect two airbag squib, speed control and horn connectors (Fig. 3). Remove driver airbag. Properly store the driver airbag out of the way. (Refer to 8 - ELECTRICAL/RESTRAINTS - WARNING)

(5) Remove the steering wheel retaining bolt (Fig. 4).

(6) Remove damper (Fig. 4).

(7) If equipped, disconnect the remote audio control switch wiring from the clockspring (Fig. 4).

CAUTION: Do not bump or hammer on steering column or steering column shaft when removing steering wheel from steering column shaft.

CAUTION: When installing steering wheel puller bolts in steering wheel, do not thread bolt into steering wheel more than a half inch. If the bolts are threaded into the steering wheel more than a half inch they will contact and damage the clockspring.

COLUMN (Continued)

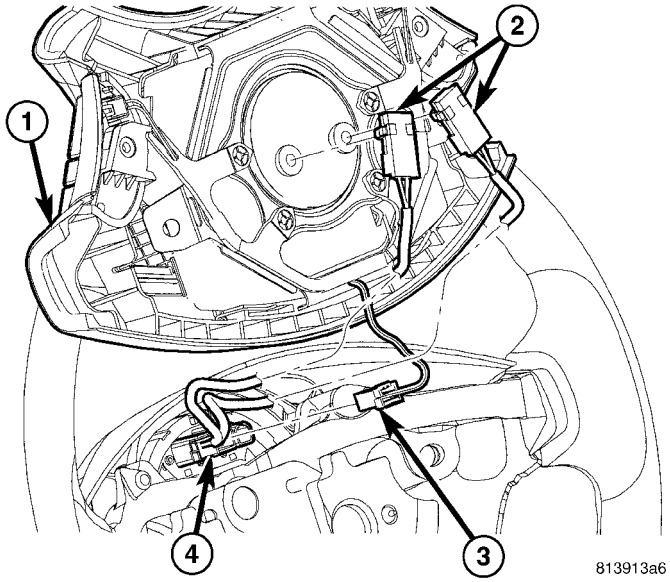

Fig. 3 Driver Airbag Wiring Connections

1 - DRIVER AIRBAG
2 - SQUIB CONNECTORS
3 - SPEED CONTROL/HORN WIRING CONNECTOR
4 - CLOCKSPRING

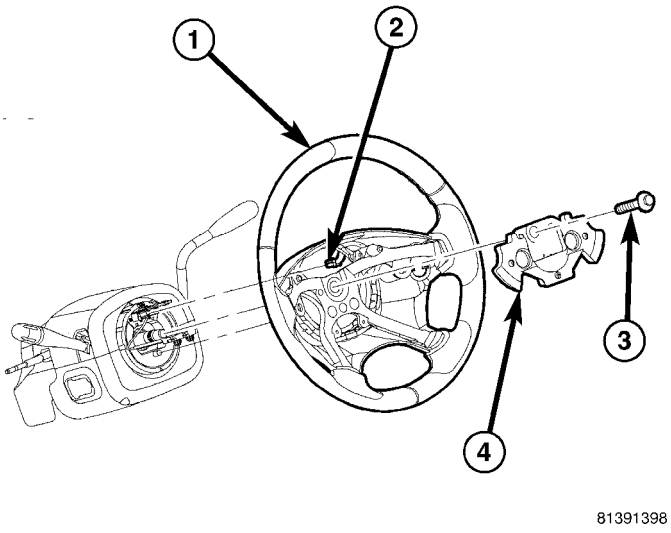

Fig. 4 Steering Wheel Mounting

1 - STEERING WHEEL
2 - REMOTE AUDIO CONTROL WIRING CONNECTOR (IF EQUIPPED)
3 - RETAINING BOLT
4 - DAMPER

(8) Remove the steering wheel using a standard wheel puller (Fig. 5).

(9) Remove the knee blocker/steering column opening cover (Refer to 23 - BODY/INSTRUMENT PANEL/STEERING COLUMN OPENING COVER - REMOVAL).

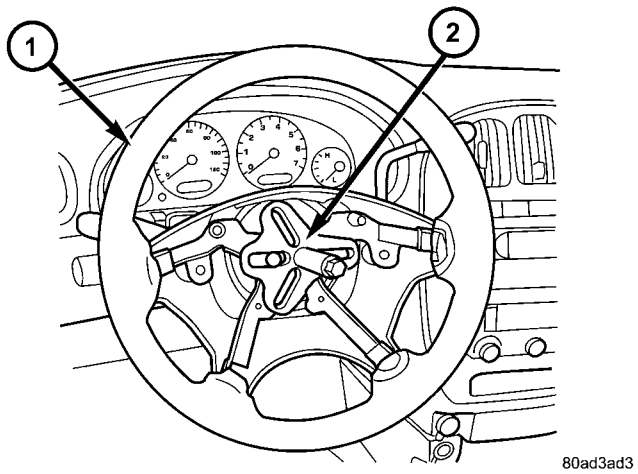

Fig. 5 Steering Wheel Removal

1 - STEERING WHEEL
2 - PULLER

(10) Remove the parking brake release handle link.

(11) Remove the knee blocker/steering column cover plate (Refer to 23 - BODY/INSTRUMENT PANEL/KNEE BLOCKER - REMOVAL).

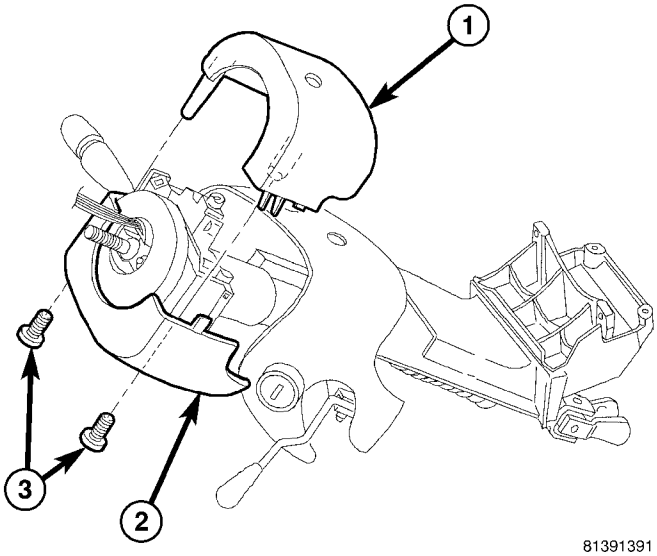

Fig. 6 Upper Shroud Mounting

1 - UPPER SHROUD
2 - LOWER SHROUD
3 - MOUNTING SCREWS

(12) Remove the upper shroud mounting screws (Fig. 6). Using hands on each side of the column, gently press inward at seams between the two shrouds at points of contact to disengage inner locking tabs, then remove upper shroud. If the vehicle is equipped with traction control, the lower shroud will need to be removed once the upper shroud is unfastened in order to disconnect the traction control wir-

COLUMN (Continued)

ing connector and remove the upper shroud with the traction control switch intact. Refer to the following steps.

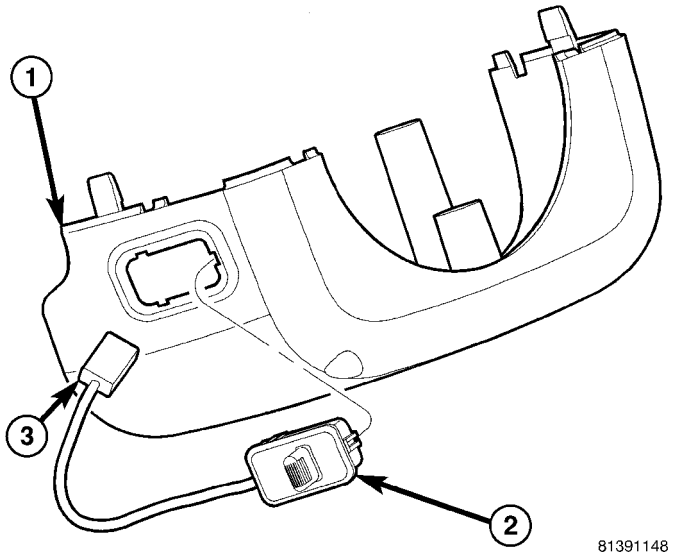

Fig. 7 Adjustable Pedals Switch Mounting

1 - LOWER SHROUD
2 - ADJUSTABLE PEDALS SWITCH
3 - WIRING CONNECTOR

(13) If equipped with adjustable pedals, disconnect the wiring connector for the switch (Fig. 7).

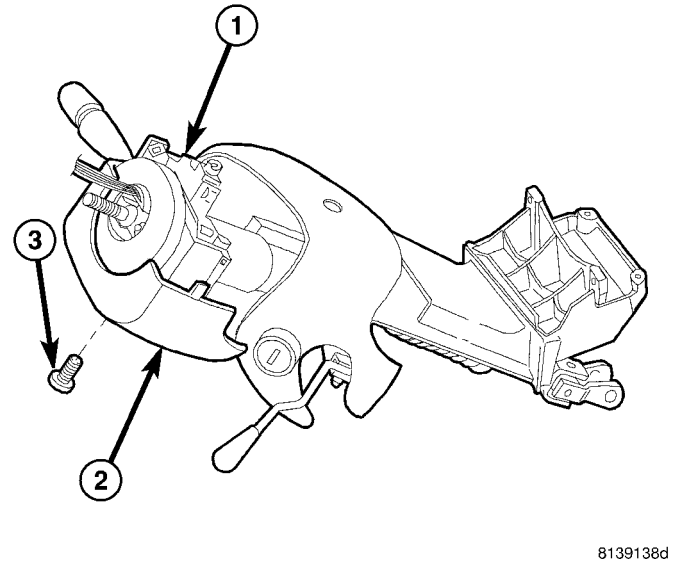

Fig. 8 Lower Shroud Mounting

1 - STEERING COLUMN
2 - LOWER SHROUD
3 - MOUNTING SCREW

(14) Remove the lower shroud mounting screw (Fig. 8), then remove the lower shroud.

(15) If equipped with traction control, disconnect the wiring connector from the column wiring harness

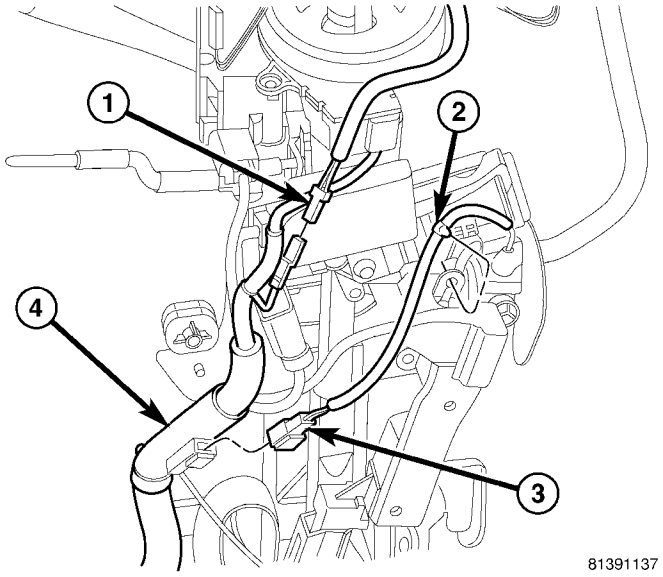

Fig. 9 Traction Control And Autostick Wiring Connections

1 - TRACTION CONTROL WIRING CONNECTOR
2 - ROUTING CLIP
3 - AUTOSTICK WIRING CONNECTOR
4 - COLUMN WIRING HARNESS

(Fig. 9). Remove the upper shroud with traction control switch.

(16) If equipped with Autostick, disconnect the wiring connector (Fig. 9).

(17) Remove the cluster trim bezel. (Refer to 23 - BODY/INSTRUMENT PANEL/CLUSTER BEZEL - REMOVAL)

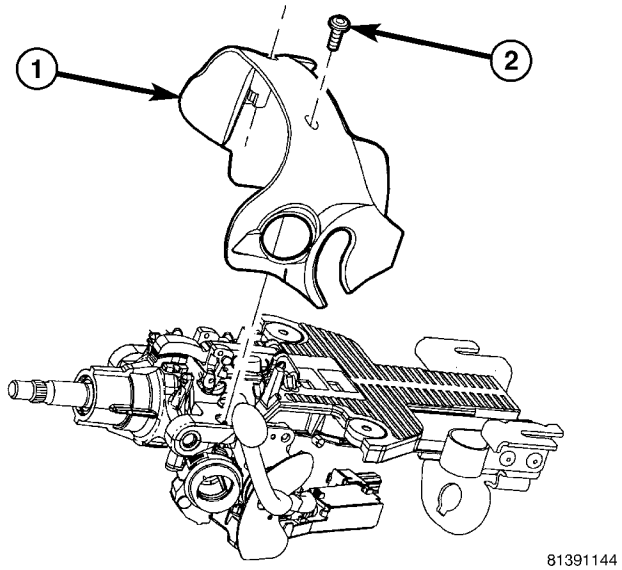

Fig. 10 Fixed Shroud Mounting

1 - FIXED SHROUD
2 - MOUNTING SCREWS

(18) Remove the screws fastening the fixed shroud in place (Fig. 10). Remove the fixed shroud.

COLUMN (Continued)

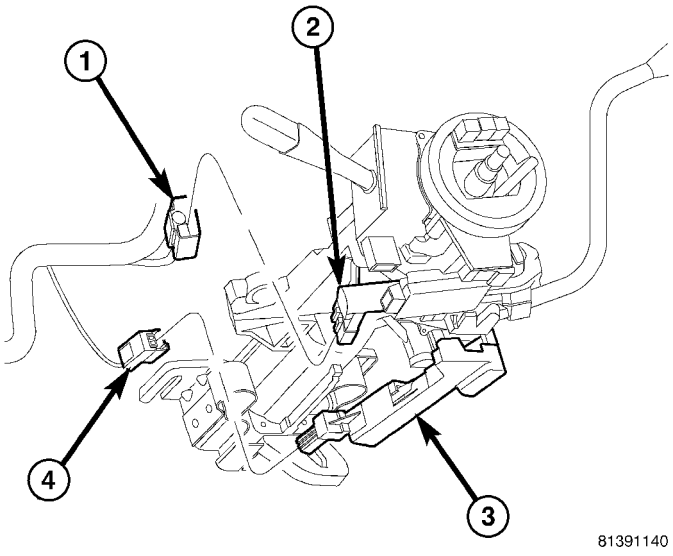

Fig. 11 Ignition Switch And BTSI Wiring Connections

1 - WIRING CONNECTOR
2 - IGNITION SWITCH
3 - BTSI
4 - WIRING CONNECTOR

(19) Disconnect the column harness wiring connectors from the Brake Transmission Shift Interlock (BTSI) and ignition switch (Fig. 11).

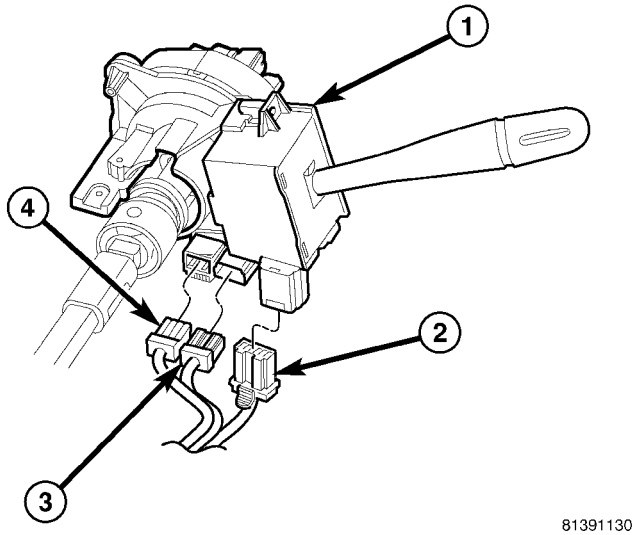

Fig. 12 Multi-function And Clockspring Wiring Connections

1 - MULTI-FUNCTION SWITCH MOUNTING HOUSING
2 - MULTI-FUNCTION WIRING CONNECTOR
3 - CLOCKSPRING WIRING CONNECTOR
4 - CLOCKSPRING SQUIB WIRING CONNECTOR

(20) Disconnect the column harness wiring connector for the multi-function switch (Fig. 12).

(21) Disconnect the column harness wiring connectors for the clockspring and SQUIB (Fig. 12).

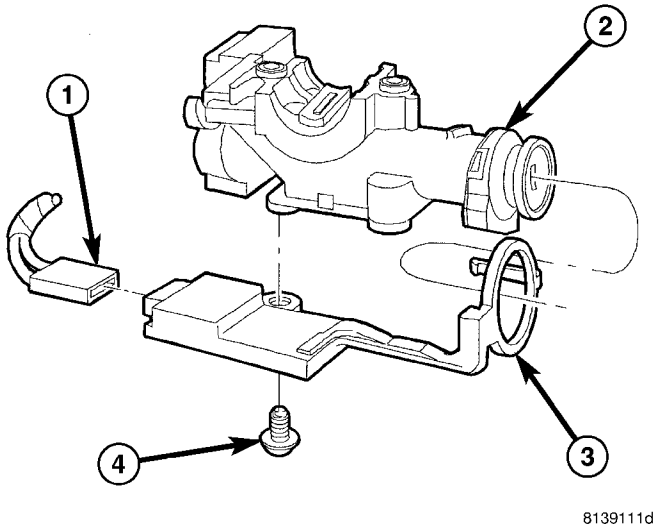

Fig. 13 Sentry Key Immobilizer Module

1 - WIRING CONNECTOR
2 - IGNITION KEY CYLINDER HALO
3 - SKIM
4 - MOUNTING SCREW

(22) If equipped with Sentry Key Immobilizer, disconnect the wiring connector from the SKIM (Fig. 13).

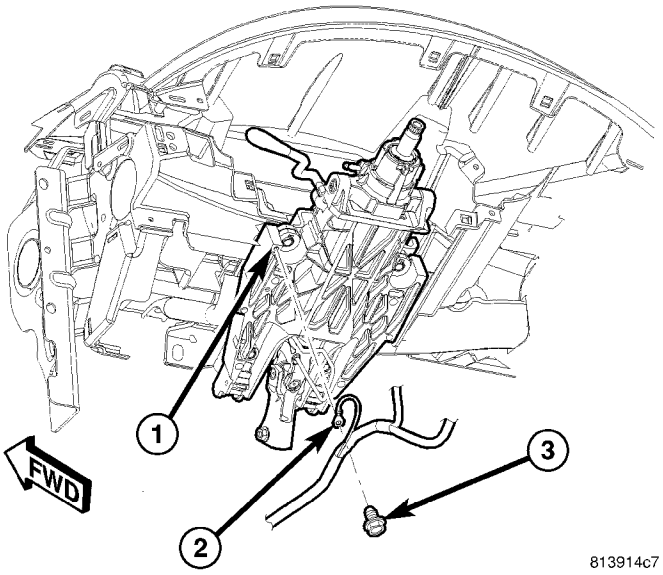

Fig. 14 Horn Ground At Column

1 - STEERING COLUMN
2 - HORN GROUND WIRE
3 - SCREW

(23) Remove screw fastening horn ground wire to column (Fig. 14).

COLUMN (Continued)

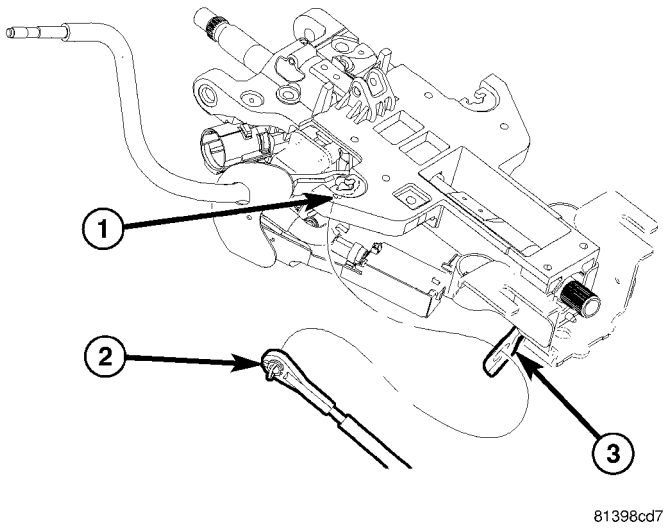

Fig. 15 Shift Cable Attachment To Column

1 - LEVER PIN
2 - SHIFT CABLE
3 - BRACKET

(24) Disconnect the shift cable at the lever pin (Fig. 15).

(25) Disconnect the shift cable at the bracket, then feed the cable out through bracket. (Fig. 15).

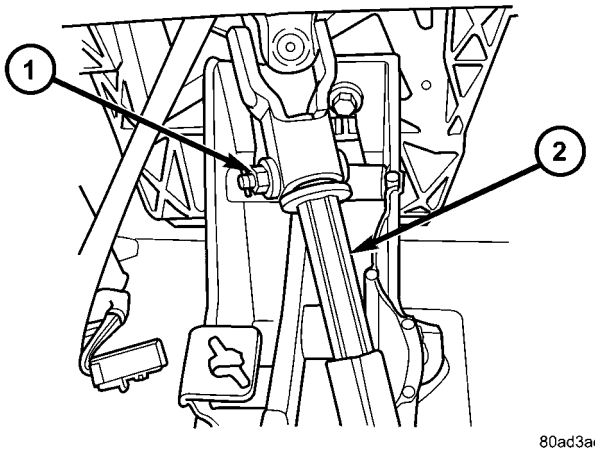

Fig. 16 Pinch Bolt

1 - PINCH BOLT
2 - STEERING COLUMN

(26) Remove the hair pin, then the pinch bolt (Fig. 16). Disconnect the column coupling.

(27) Loosen the column lower mounting nuts (Fig. 17).

(28) Remove the column upper mounting nuts (Fig. 17).

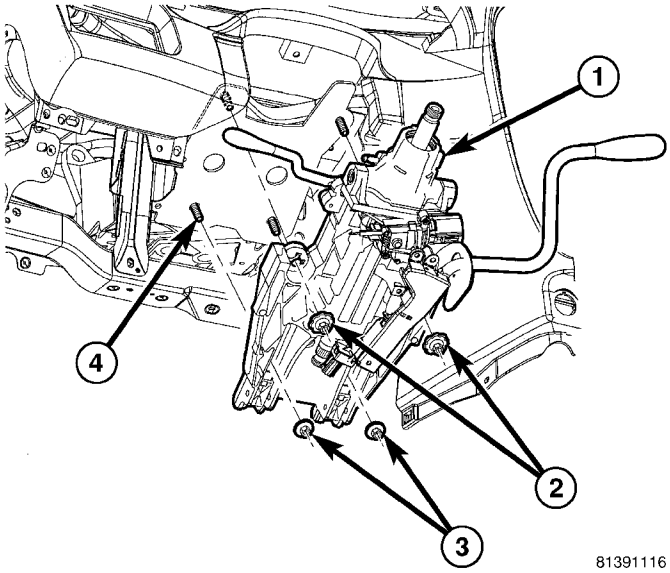

Fig. 17 Steering Column Mounting

1 - STEERING COLUMN
2 - UPPER MOUNTING NUTS
3 - LOWER MOUNTING NUTS
4 - MOUNTING STUDS

(29) Remove the steering column (Fig. 17).

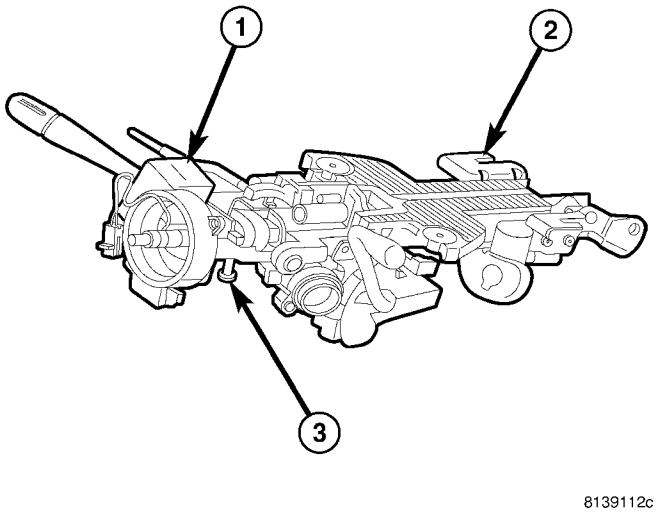

Fig. 18 Multi-Function Switch Mounting Housing Set-Screw

1 - MULTI-FUNCTION SWITCH MOUNTING HOUSING
2 - STEERING COLUMN
3 - SET-SCREW

(30) If the steering column is being replaced, remove the set-screw fastening the multi-function switch mounting housing to the column (Fig. 18).

COLUMN (Continued)

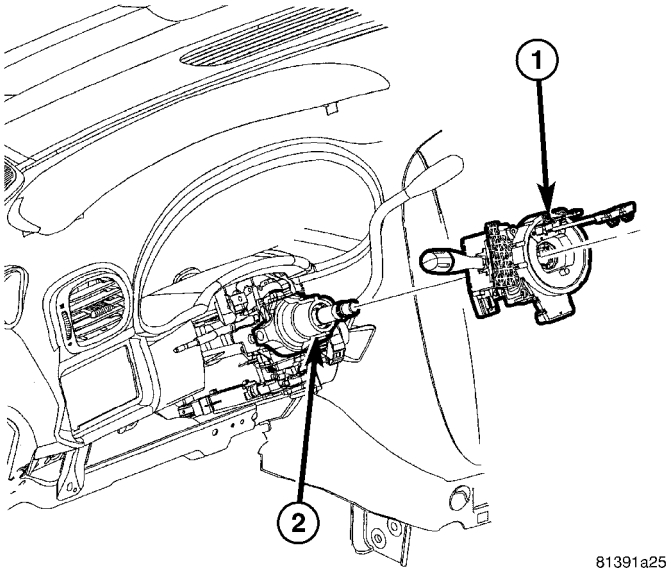

Fig. 19 Multi-Function Switch Mounting Housing

1 - MULTI-FUNCTION SWITCH MOUNTING HOUSING
2 - STEERING COLUMN

(31) If the steering column is being replaced, slide the multi-function switch mounting housing off the column (Fig. 19).

(32) If the steering column is being replaced, remove the mounting screw fastening the SKIM to the ignition key cylinder housing (Fig. 13). Remove the SKIM.

(33) If the steering column is being replaced, remove the halo from the ignition key cylinder housing (Fig. 13).

(34) If the steering column is being replaced, remove the ignition key lock cylinder (Refer to 19 - STEERING/COLUMN/KEY/LOCK CYLINDER - REMOVAL).

INSTALLATION

NOTE: Before proceeding, (Refer to 19 - STEERING/COLUMN - WARNING)(Refer to 8 - ELECTRICAL/RESTRAINTS/DRIVER AIRBAG - REMOVAL).

NOTE: Make sure the front wheels of the vehicle are still in the STRAIGHT AHEAD position before beginning the column installation procedure.

(1) If removed, install the ignition key lock cylinder (Refer to 19 - STEERING/COLUMN/KEY/LOCK CYLINDER - INSTALLATION).

(2) If removed, install the halo on the ignition key cylinder housing (Fig. 13).

(3) If removed, install SKIM (Fig. 13). Install the mounting screw fastening the SKIM to the ignition key cylinder housing. Tighten the screw to 4 N·m (30 in. lbs.) torque.

(4) If removed, slide the multi-function switch mounting housing onto the column (Fig. 19).

(5) If multi-function switch mounting housing is being installed, install the set-screw fastening the housing to the column (Fig. 18). Tighten the set-screw to 14 N·m (124 in. lbs.) torque.

(6) Install the steering column (Fig. 17). Slide the column lower mounting slots over the lower mounting studs (with nuts started) first, then lift column into place over the upper mounting studs.

(7) Install the two upper mounting nuts (Fig. 17). Tighten the two upper mounting nuts, then the two lower mounting nuts to 12 N·m (105 in. lbs.) torque.

(8) Match the column shaft coupling to the intermediate shaft and install the pinch bolt (Fig. 16). Tighten the pinch bolt nut to 28 N·m (250 in. lbs.) torque. Install the hair pin in the end of the pinch bolt.

(9) Feed the shift cable through the bracket on the column (Fig. 15), then install the clip fastening the cable housing to the bracket.

(10) Connect the shift cable to the lever pin (Fig. 15).

(11) Install the screw fastening the horn ground wire to the column (Fig. 14). Tighten the screw to 7 N·m (60 in. lbs.) torque.

(12) If equipped with Sentry Key Immobilizer, connect the wiring connector to the SKIM (Fig. 13).

(13) Connect the column harness wiring connectors for the clockspring and SQUIB (Fig. 12).

(14) Connect the column harness wiring connector for the multi-function switch (Fig. 12).

(15) Connect the column harness wiring connectors for the Brake Transmission Shift Interlock (BTSI) and ignition switch (Fig. 11).

(16) Install the fixed shroud (Fig. 10). Install the screws fastening the fixed shroud in place and tighten the screws to 3 N·m (23 in. lbs.) torque.

(17) If equipped with Autostick, connect the wiring connector (Fig. 9).

(18) If equipped with traction control, position the upper shroud above the column and route the switch wiring down around the column. Connect the wiring connector from the column wiring harness to the traction control switch wiring (attached to upper shroud) (Fig. 9).

COLUMN (Continued)

(19) Position the lower shroud on the column (Fig. 8). Install the lower shroud mounting screw. Tighten the screw to 2 N·m (17 in. lbs.) torque.

(20) If equipped with adjustable pedals, Connect the wiring connector for the switch (Fig. 7) to the column wiring harness.

(21) Position the upper shroud on top of the lower shroud and snap it into place. Install the upper shroud mounting screws (Fig. 6). Tighten the screws to 2 N·m (17 in. lbs.) torque.

(22) Inspect shroud mating surfaces for excessive gaps and correct as necessary.

(23) Install the cluster trim bezel (Refer to 23 - BODY/INSTRUMENT PANEL/CLUSTER BEZEL - INSTALLATION).

(24) Install the knee blocker/steering column cover plate. (Refer to 23 - BODY/INSTRUMENT PANEL/ KNEE BLOCKER - INSTALLATION)

(25) Install the parking brake handle link.

(26) Install the knee blocker/steering column opening cover. (Refer to 23 - BODY/INSTRUMENT PANEL/STEERING COLUMN OPENING COVER - INSTALLATION)

(27) Align the splines and install the steering wheel on the steering column shaft(Refer to 19 - STEERING/COLUMN/STEERING WHEEL - INSTALLATION).

(28) Install the damper over the steering column shaft (Fig. 4).

(29) Install the steering wheel retaining bolt (Fig. 4). Tighten the bolt to 61 N·m (45 ft. lbs.) torque.

(30) If the steering wheel is equipped with remote audio controls, connect the wiring connector to the clockspring (Fig. 4).

(31) Connect the two squib connectors to the driver airbag (Fig. 3). The connectors are color coded to avoid connector mix-up.

(32) Connect the speed control and horn connector to the clockspring (Fig. 3).

(33) Install the airbag to the steering wheel. Install the driver airbag mounting screws (Fig. 2). Tighten screws to 10 N·m (90 in. lbs.) torque.

(34) Connect the battery negative (ground) cable to battery post following special Diagnosis And Testing procedure. (Refer to 8 - ELECTRICAL/RESTRAINTS - DIAGNOSIS AND TESTING)

(35) Check operation of all steering column mounted components.

(36) Road test vehicle to ensure proper operation of steering.

SPECIFICATIONS

COLUMN FASTENER TORQUE

DESCRIPTION	N·m	Ft. Lbs.	In. Lbs.
Driver Airbag Mounting Screws	10	—	90
Multi-Function Switch Mounting Housing Set-Screw	14	—	124
Shroud Attaching Screws - Fixed	3	—	23
Shroud Attaching Screws - Lower/Upper	2	—	17
SKIM Attaching Screw	4	—	30
Steering Column Coupling Pinch Bolt	28	—	250
Steering Column Mounting Nuts	12	—	105
Steering Wheel Retaining Bolt	61	45	—

IGNITION SWITCH

REMOVAL

The ignition switch attaches to the lock cylinder housing on the end opposite the lock cylinder (Fig. 20). For ignition switch terminal and circuit identification, refer to the appropriate wiring information. The wiring information includes wiring diagrams, proper wire and connector repair procedures, further details on wire harness routing and retention, as well as pin-out and location views for the various wire harness connectors, splices and grounds.

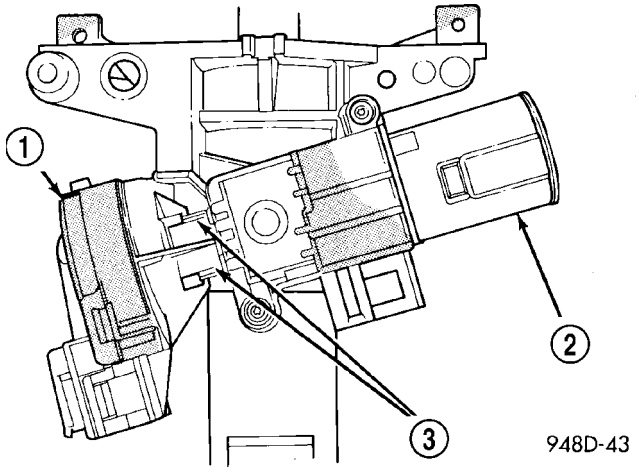

Fig. 20 Ignition Switch—Viewed From Below Column

1 - IGNITION SWITCH
2 - LOCK CYLINDER HOUSING
3 - RETAINING TABS

(1) Disconnect negative cable from battery.

IGNITION SWITCH (Continued)

(2) Remove steering column cover retaining screws (Fig. 21).

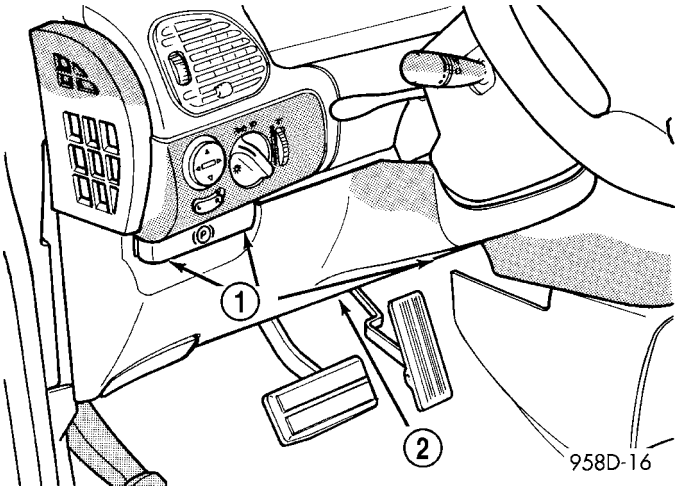

Fig. 21 Steering Column Cover

1 - SCREWS
2 - STEERING COLUMN COVER

(3) Remove parking brake release cable from handle (Fig. 22).

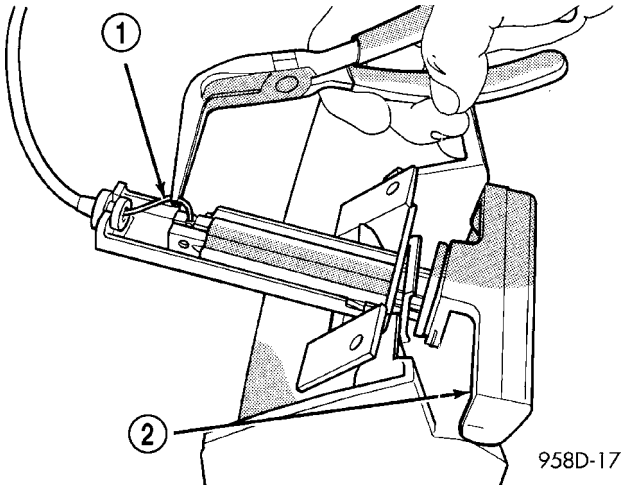

Fig. 22 Parking Brake Release Cable

1 - PARKING BRAKE CABLE
2 - PARKING BRAKE HANDLE

(4) Remove screws holding steering column shrouds (Fig. 23)and remove lower shroud.

(5) Place key cylinder in RUN position. Depress lock cylinder retaining tab and remove key cylinder (Fig. 24).

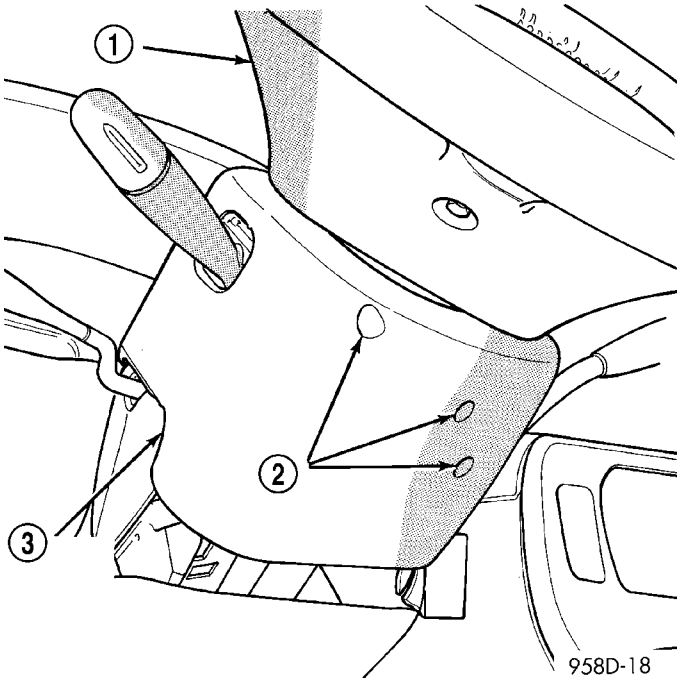

Fig. 23 Steering Column Shroud Screws

1 - STEERING WHEEL
2 - SCREWS
3 - LOWER STEERING COLUMN SHROUD

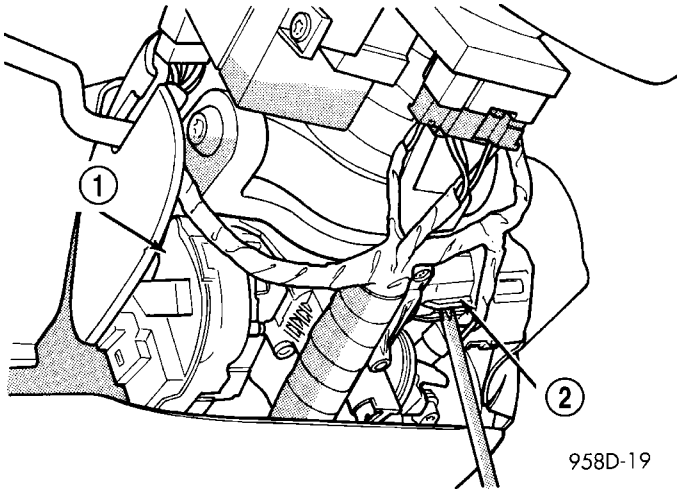

Fig. 24 Lock Cylinder Retaining Tab

1 - IGNITION SWITCH
2 - RETAINING TAB

IGNITION SWITCH (Continued)

(6) Remove ignition switch mounting screw (Fig. 25) with a #10 Torx® tamper proof bit.

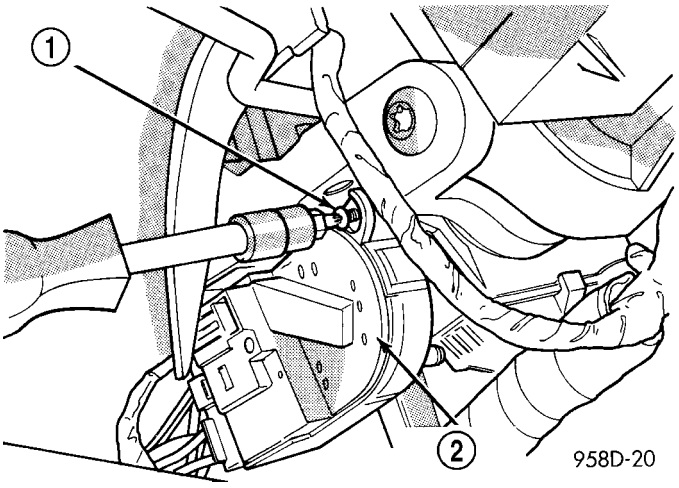

Fig. 25 Ignition Switch Mounting Screw

1 - MOUNTING SCREW
2 - IGNITION SWITCH

(7) Depress retaining tab (Fig. 21) or (Fig. 26) and gently pry ignition switch from steering column (Fig. 27).

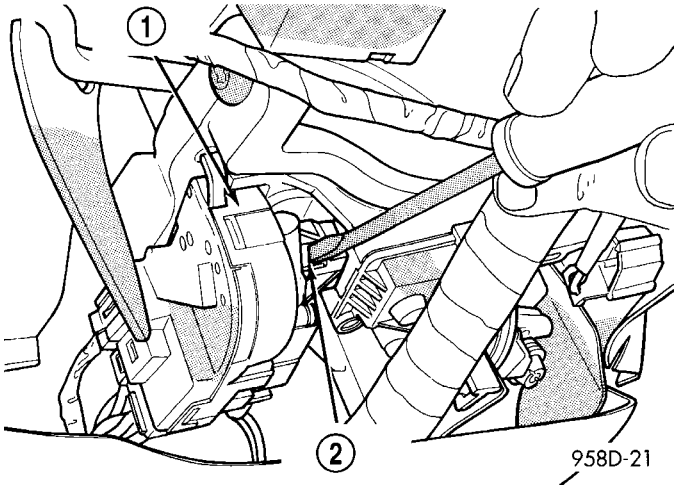

Fig. 26 Ignition Switch Retaining Tab

1 - IGNITION SWITCH
2 - RETAINING TAB

(8) Disconnect electrical connectors from ignition switch and remove switch (Fig. 28).

INSTALLATION

The ignition switch attaches to the lock cylinder housing on the end opposite the lock cylinder (Fig. 20). For ignition switch terminal and circuit identification, refer to the Wiring Diagrams section.

(1) Ensure the ignition switch is in the RUN position and the actuator shaft in the lock housing is in the RUN position.

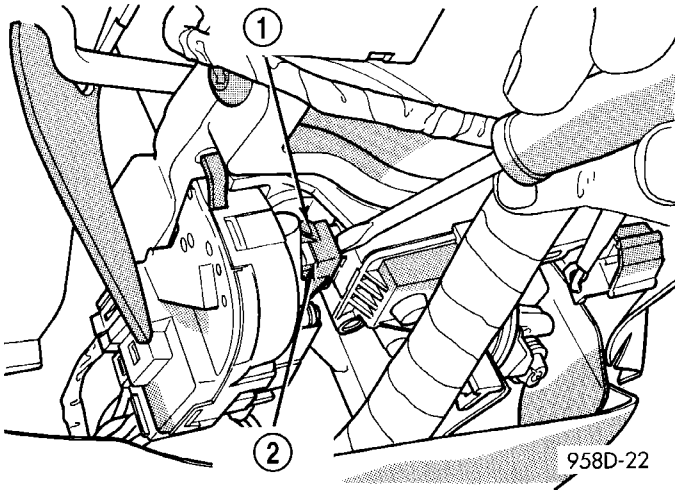

Fig. 27 Removing Ignition Switch

1 - IGNITION SWITCH
2 - RETAINING TAB

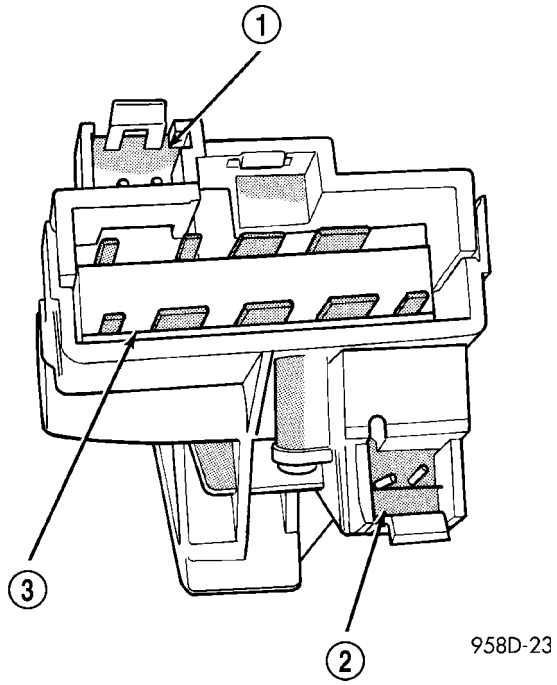

Fig. 28 Ignition Switch Connectors

1 - KEY IN SWITCH
2 - PRNDL SWITCH
3 - IGNITION SWITCH

(2) Install electrical connectors to ignition switch.

(3) Carefully install the ignition switch. The switch will snap over the retaining tabs (Fig. 29). Install mounting screw (Fig. 25).

(4) Install upper and lower shrouds.

(5) Install key cylinder (cylinder retaining tab will depress only in the RUN position).

IGNITION SWITCH (Continued)

(6) Connect negative cable to battery.

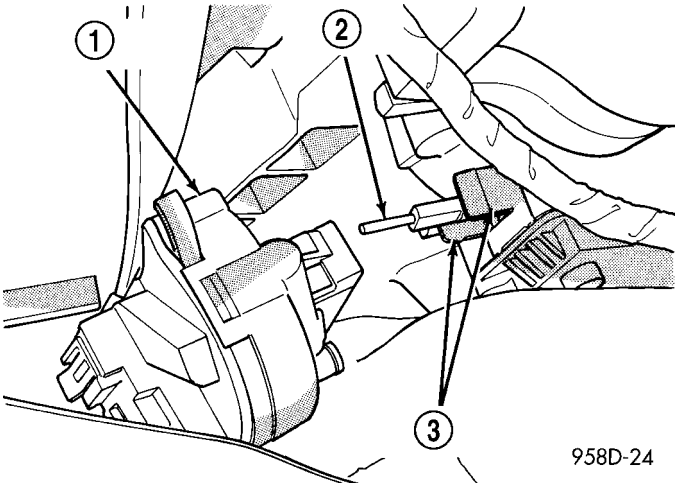

Fig. 29 Ignition Switch Installation

1 - IGNITION SWITCH
2 - ACTUATOR SHAFT
3 - RETAINING TABS

(7) Check for proper operation of ignition switch and key-in warning switch.

KEY/LOCK CYLINDER

DESCRIPTION

The lock cylinder is inserted in the end of the housing opposite the ignition switch.

OPERATION

The ignition key rotates the cylinder to 5 different detents (Fig. 30) :

- Accessory
- Off (lock)
- Unlock
- On/Run
- Start

REMOVAL

(1) Disconnect negative cable from battery.

(2) Remove steering column cover retaining screws.

(3) Remove screws holding steering column shrouds and remove lower shroud.

(4) Place key cylinder in RUN position. Depress lock cylinder retaining tab on the bottom of the lock housing and remove key cylinder.

INSTALLATION

(1) Install key in lock cylinder. Turn key to run position (retaining tab on lock cylinder can be depressed).

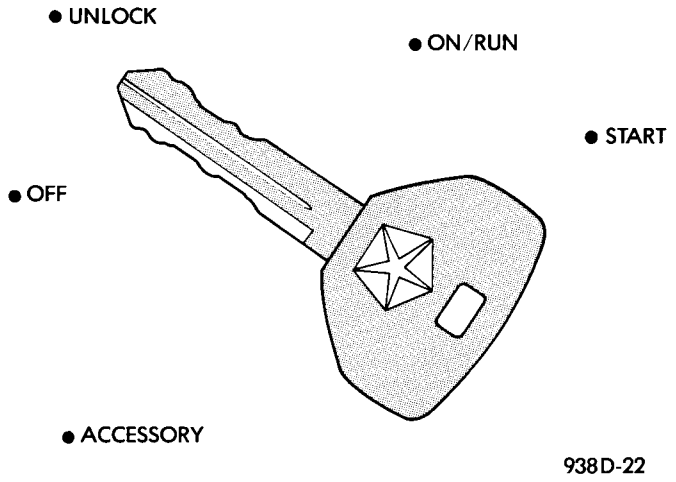

Fig. 30 Ignition Lock Cylinder Detents

(2) The shaft at the end of the lock cylinder aligns with the socket in the end of the housing. To align the socket with the lock cylinder, ensure the socket is in the Run position (Fig. 31).

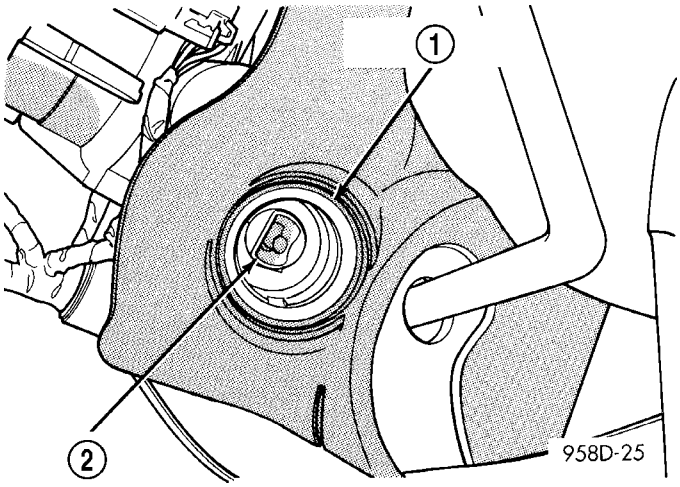

Fig. 31 Socket in Lock Cylinder Housing

1 - LOCK CYLINDER HOUSING
2 - SOCKET

(3) Align the lock cylinder with the grooves in the housing. Slide the lock cylinder into the housing until the tab sticks through the opening in the housing.

(4) Turn the key to the Off position. Remove the key.

(5) Install lower steering column shroud.

(6) Install steering column cover.

(7) Connect negative cable to battery.

SHROUD - LOWER

REMOVAL

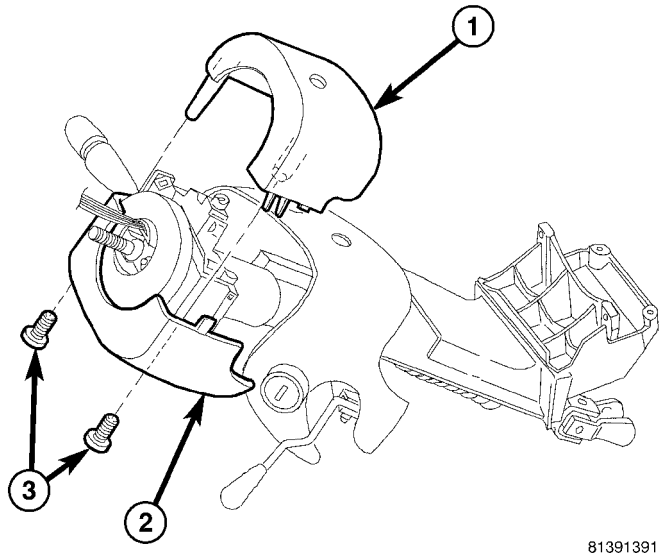

Fig. 32 Upper Shroud Mounting

1 - UPPER SHROUD
2 - LOWER SHROUD
3 - MOUNTING SCREWS

(1) Remove the two shroud-to-shroud mounting screws fastening the upper to lower shrouds (Fig. 32).

(2) Using hands on each side of the column, gently press inward at seams between the two shrouds at points of contact to disengage inner locking tabs.

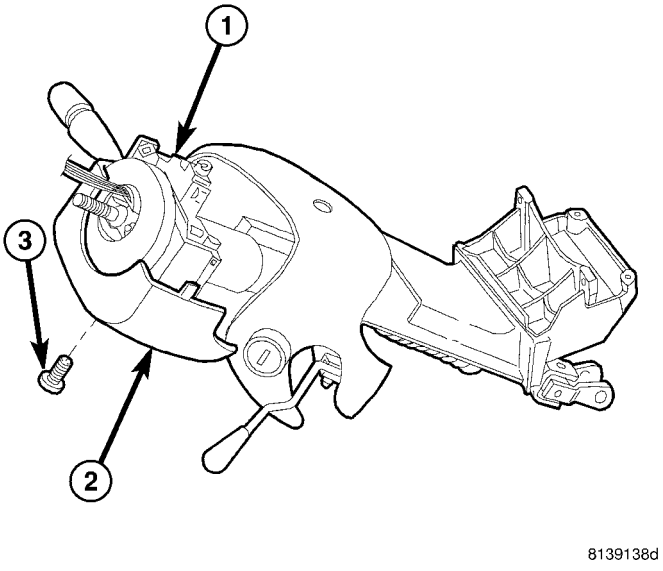

Fig. 33 Lower Shroud Mounting

1 - STEERING COLUMN
2 - LOWER SHROUD
3 - MOUNTING SCREW

(3) Remove the lower shroud-to-column mounting screw (Fig. 33).

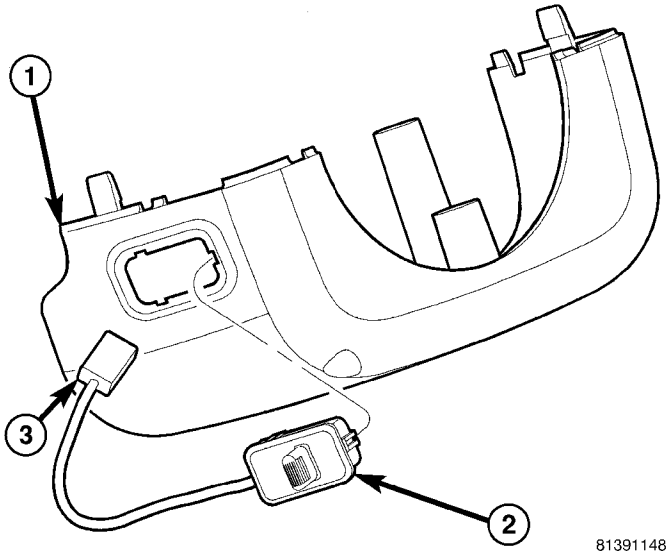

Fig. 34 Adjustable Pedals Switch Mounting

1 - LOWER SHROUD
2 - ADJUSTABLE PEDALS SWITCH
3 - WIRING CONNECTOR

(4) If equipped with adjustable pedals, disconnect the wiring connector for the switch (Fig. 34).

(5) Remove the lower shroud from the steering column.

(6) If equipped with adjustable pedals, depress the retaining tabs on the switch and remove the switch from the lower shroud (Fig. 34).

INSTALLATION

(1) If the vehicle is equipped with adjustable pedals:

(a) Pass the wiring through the mounting hole and install the switch into the lower shroud (Fig. 34), snapping it into place.

(b) Connect the switch wiring connector to the column wiring harness.

(2) Position the lower shroud under the steering column and install the lower shroud-to-column mounting screw (Fig. 33). Tighten the screw to 2 N·m (17 in. lbs.) torque.

(3) Align the upper shroud with the lower, then snap shrouds together at locking tab locations on both sides of column.

(4) Install the two shroud-to-shroud mounting screws (Fig. 32). Tighten the screws to 2 N·m (17 in. lbs.) torque.

(5) Inspect shroud mating surfaces for excessive gaps and correct as necessary.

(6) Check operation of any previously disconnected switches.

SHROUD - UPPER

REMOVAL

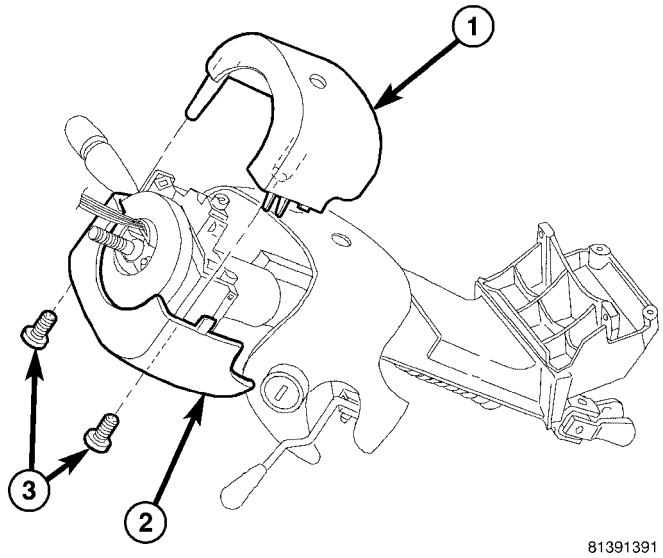

Fig. 35 Upper Shroud Mounting

1 - UPPER SHROUD
2 - LOWER SHROUD
3 - MOUNTING SCREWS

(1) Remove the two shroud-to-shroud mounting screws fastening the upper to lower shrouds (Fig. 35).

(2) Using hands on each side of the column, gently press inward at seams between the two shrouds at points of contact to disengage inner locking tabs.

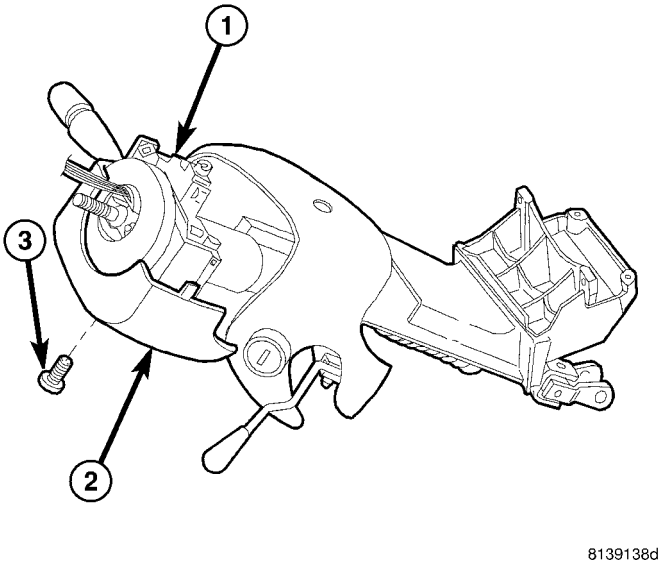

Fig. 36 Lower Shroud Mounting

1 - STEERING COLUMN
2 - LOWER SHROUD
3 - MOUNTING SCREW

(3) If the vehicle is equipped with traction control, remove the lower shroud-to-column mounting screw (Fig. 36).

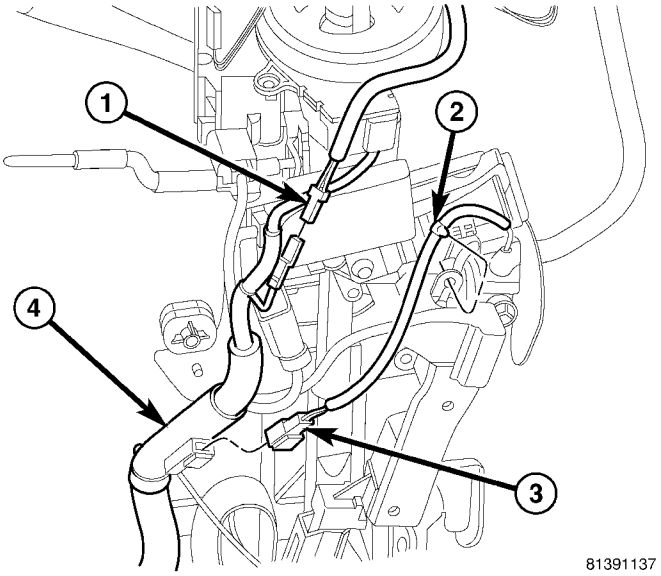

Fig. 37 Traction Control And Autostick Wiring Connections

1 - TRACTION CONTROL WIRING CONNECTOR
2 - ROUTING CLIP
3 - AUTOSTICK WIRING CONNECTOR
4 - COLUMN WIRING HARNESS

(4) If the vehicle is equipped with traction control, disconnect the switch wiring connector from the column wiring harness (Fig. 37).

(5) If the vehicle is equipped with power foldaway mirrors (Export), disconnect wiring connector at mirror switch pig tail.

(6) Remove the upper shroud from the steering column.

(7) If the vehicle is equipped with traction control, remove the switch wiring from the routing clip attached to the upper shroud (Fig. 38).

(8) If the vehicle is equipped with traction control, remove the traction control switch from the upper shroud (Fig. 39).

(9) If the vehicle is equipped with power foldaway mirrors (Export), remove power foldaway switch from upper shroud.

INSTALLATION

(1) If the vehicle is equipped with power foldaway mirrors (Export), install the power foldaway switch in the upper shroud.

(2) If vehicle is equipped with traction control, install the traction control switch in the upper shroud (Fig. 39).

(3) If the vehicle is equipped with traction control, attach the switch wiring to the routing clip attached to the upper shroud (Fig. 38).

SHROUD - UPPER (Continued)

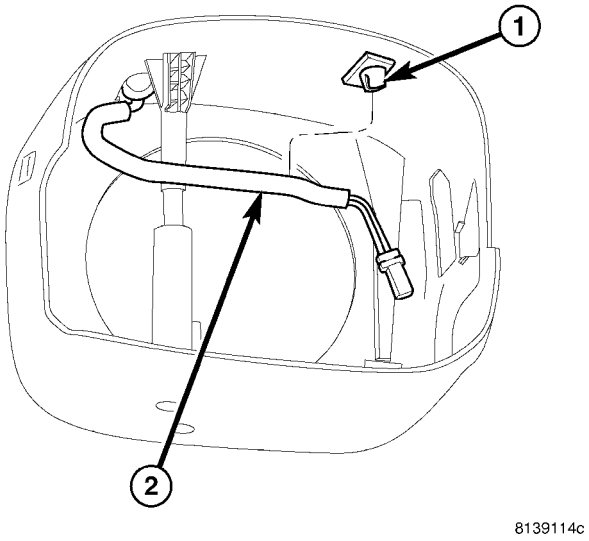

Fig. 38 Traction Control Switch Routing Clip

1 - ROUTING CLIP
2 - SWITCH WIRING

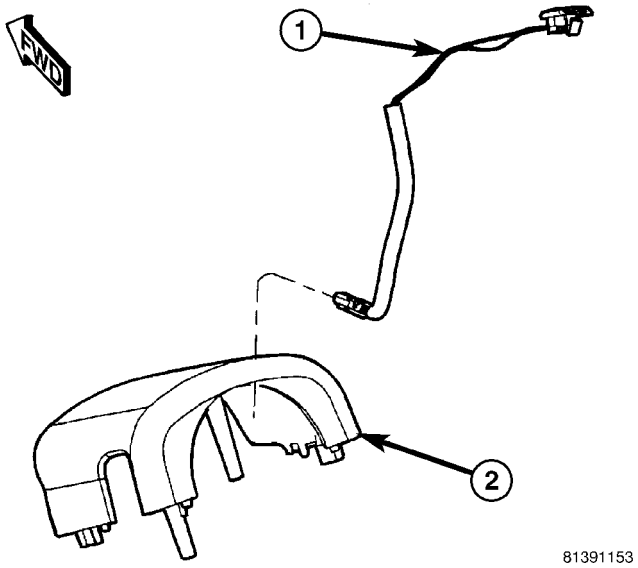

Fig. 39 Traction Control Switch Mounting

1 - TRACTION CONTROL SWITCH
2 - UPPER SHROUD

(4) Position the upper shroud on the column (Fig. 35).

(5) If equipped with traction control, route the switch wiring down around the column. Connect the wiring connector from the column wiring harness to the traction control switch wiring (attached to upper shroud) (Fig. 37).

(6) If removed, position the lower shroud on the column (Fig. 36). Install the lower shroud mounting screw. Tighten the screw to 2 N·m (17 in. lbs.) torque.

(7) Align the upper shroud with the lower, then snap shrouds together at locking tab locations on both sides of column.

(8) Install the two shroud-to-shroud mounting screws (Fig. 35). Tighten the screws to 2 N·m (17 in. lbs.) torque.

(9) Inspect shroud mating surfaces for excessive gaps and correct as necessary.

(10) Check operation of any previously disconnected switches.

STEERING WHEEL

REMOVAL

NOTE: Before proceeding, (Refer to 19 - STEERING/ COLUMN - WARNING)(Refer to 8 - ELECTRICAL/RESTRAINTS - WARNING).

(1) Disconnect and isolate the negative (ground) cable from the battery. Wait at least two minutes for the airbag system reserve capacitor to discharge before beginning any steering column, instrument panel, or airbag system/component service.

WARNING: WHEN AN UNDEPLOYED AIRBAG IS TO BE REMOVED FROM THE VEHICLE, FIRST DISCONNECT AND ISOLATE THE BATTERY NEGATIVE (GROUND) CABLE. ALLOW THE AIRBAG SYSTEM RESERVE CAPACITOR TO DISCHARGE FOR TWO MINUTES BEFORE BEGINNING ANY AIRBAG SYSTEM OR COMPONENT SERVICE. PERSONAL INJURY MAY RESULT IF THIS PROCEDURE IS NOT FOLLOWED.

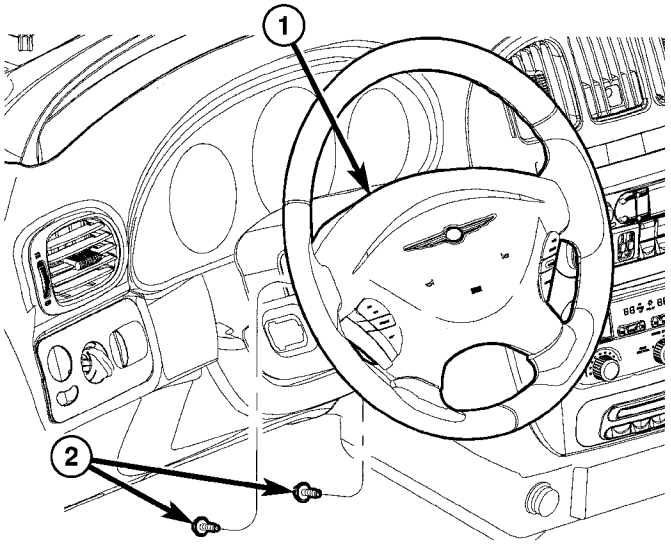

Fig. 40 Driver Airbag Mounting

1 - DRIVER AIRBAG
2 - MOUNTING SCREWS

STEERING WHEEL (Continued)

(2) Remove the driver airbag mounting screws (Fig. 40).

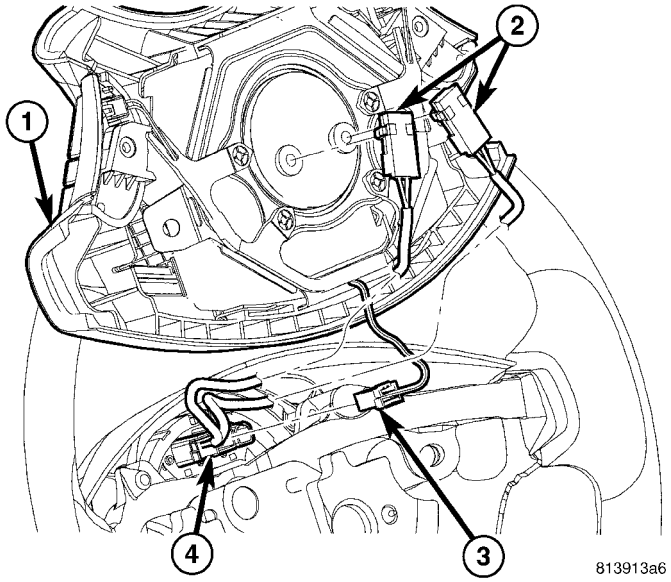

Fig. 41 Driver Airbag Wiring Connections

1 - DRIVER AIRBAG
2 - SQUIB CONNECTORS
3 - SPEED CONTROL/HORN WIRING CONNECTOR
4 - CLOCKSPRING

(3) Lift the airbag from its mount and disconnect two airbag squib, speed control and horn connectors (Fig. 41). Remove driver airbag. Properly store the driver airbag out of the way. (Refer to 8 - ELECTRICAL/RESTRAINTS - WARNING)

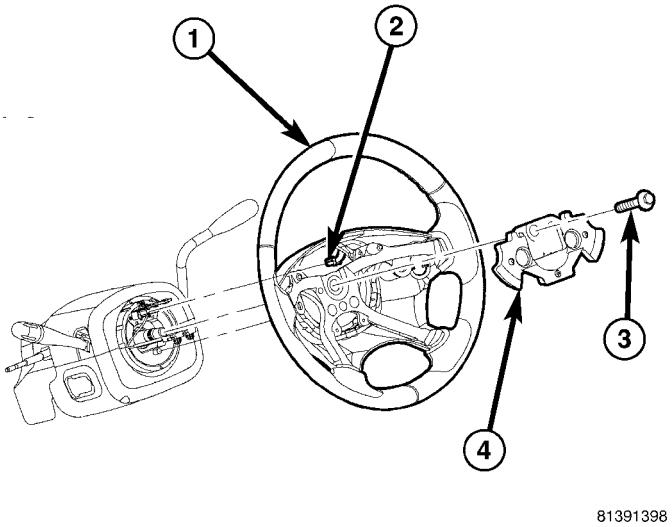

Fig. 42 Steering Wheel Mounting

1 - STEERING WHEEL
2 - REMOTE AUDIO CONTROL WIRING CONNECTOR (IF EQUIPPED)
3 - RETAINING BOLT
4 - DAMPER

(4) Remove the steering wheel retaining bolt (Fig. 42).

(5) Remove damper (Fig. 42).

(6) If equipped, disconnect the remote audio control switch wiring from the clockspring (Fig. 42).

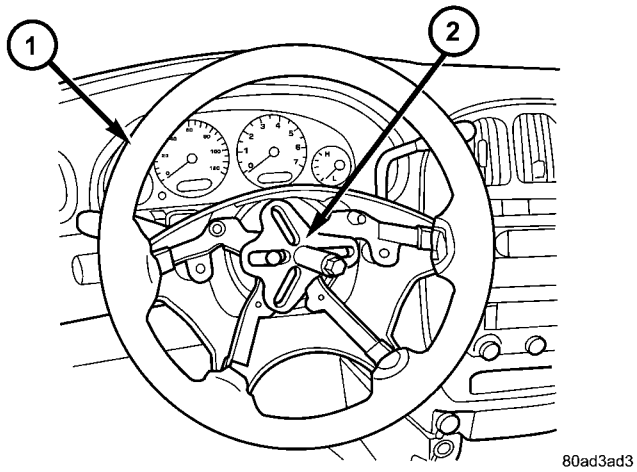

Fig. 43 Steering Wheel Removal

1 - STEERING WHEEL
2 - PULLER

CAUTION: Do not bump or hammer on steering column or steering column shaft when removing steering wheel from steering column shaft.

CAUTION: When installing steering wheel puller bolts in steering wheel, do not thread bolt into steering wheel more than a half inch. If the bolts are threaded into the steering wheel more than a half inch they will contact and damage the clockspring.

(7) While holding the steering wheel firmly in the **straight-ahead** position, remove the steering wheel from steering column shaft using a steering wheel puller (Fig. 43).

(8) Remove the puller from the steering wheel.

(9) If the remote audio switches need removed from the steering wheel, (Refer to 8 - ELECTRICAL/AUDIO/REMOTE SWITCHES - REMOVAL).

INSTALLATION

(1) If the remote radio switches need to be installed on the steering wheel, (Refer to 8 - ELECTRICAL/AUDIO/REMOTE SWITCHES - INSTALLATION).

CAUTION: Do not force steering wheel onto steering column shaft by driving it on. Pull steering wheel down onto shaft using only the steering wheel retaining nut.

STEERING WHEEL (Continued)

(2) Feed and route wiring from clockspring through upper access hole in steering wheel.

(3) Align master serrations in steering wheel with omitted spline on steering column shaft (at 12 o'clock position). Slide the steering wheel onto the steering column shaft by hand (Fig. 42). Use care not to pinch any wiring.

NOTE: Before installing the damper on the steering wheel, inspect the damper to ensure the rubber isolator on the damper is not deteriorated or damaged. If the damper is installed with a damaged isolator, a buzz, squeak or rattle condition may develop.

(4) Install the damper on the steering wheel (Fig. 42).

(5) Install the steering wheel retaining bolt. Tighten the steering wheel retaining bolt to 61 N·m (45 ft. lbs.) torque.

(6) If the steering wheel is equipped with remote audio controls, connect the wiring connector to the clockspring (Fig. 42).

(7) Connect the airbag squib wiring connectors to the airbag and the horn and speed control switch connector to the clockspring (Fig. 41).

(8) Install the driver airbag in the steering wheel (Fig. 40). Install and tighten the airbag attaching screws to 10 N·m (90 in. lbs.) torque.

(9) Connect the battery negative (ground) cable to battery post following special Diagnosis And Testing procedure. (Refer to 8 - ELECTRICAL/RESTRAINTS - DIAGNOSIS AND TESTING)

(10) Check operation of all steering wheel mounted components.

(11) Road test vehicle to ensure proper operation of steering.

GEAR

TABLE OF CONTENTS

	page
GEAR	
DESCRIPTION	26
OPERATION	26
WARNING	
WARNINGS AND CAUTIONS	26
REMOVAL	
REMOVAL - LHD GEAR	26
REMOVAL - RHD GEAR	29
INSTALLATION	
INSTALLATION - LHD GEAR	31
INSTALLATION - RHD GEAR	33
SPECIAL TOOLS	
POWER STEERING GEAR	34
OUTER TIE ROD	
REMOVAL	34
INSTALLATION	35

GEAR

DESCRIPTION

This vehicle is equipped with a rack and pinion power steering gear (Fig. 1). It is mounted to the underside of the front suspension cradle/crossmember.

The steering column is attached to the gear through the use of an intermediate shaft and couplers. The outer ends of the power steering gear's outer tie rods connect to the steering knuckles.

NOTE: The power steering gear should NOT be serviced or adjusted unless DaimlerChrysler Corporation authorizes. If a malfunction or oil leak occurs, the complete steering gear should be replaced. Only the outer tie rods may be replaced separately from the rest of the gear.

OPERATION

Turning of the steering wheel is converted into linear (side-to-side) travel through the meshing of the helical pinion teeth with the rack teeth in the steering gear. This travel pushes and pulls the tie rods to change the direction of the vehicle's front wheels.

Power assist steering provided by the power steering pump is controlled by an open center, rotary type control valve which directs oil from the pump to either side of the integral rack piston upon demand.

Road feel is controlled by the diameter of a torsion bar which initially steers the vehicle. As required steering effort increases, as in a turn, the torsion bar twists, causing relative rotary motion between the rotary valve body and the valve spool. This movement directs oil behind the integral rack piston which, in turn, builds hydraulic pressure and assists in the turning effort.

Manual steering control of the vehicle can be maintained if power steering assist is lost. However, under this condition, steering effort is significantly increased.

WARNING

WARNINGS AND CAUTIONS

WARNING: POWER STEERING FLUID, ENGINE PARTS AND EXHAUST SYSTEM MAY BE EXTREMELY HOT IF ENGINE HAS BEEN RUNNING. DO NOT START ENGINE WITH ANY LOOSE OR DISCONNECTED HOSES. DO NOT ALLOW HOSES TO TOUCH HOT EXHAUST MANIFOLD OR CATALYST.

WARNING: FLUID LEVEL SHOULD BE CHECKED WITH THE ENGINE OFF TO PREVENT PERSONAL INJURY FROM MOVING PARTS.

CAUTION: When the system is open, cap all open ends of the hoses, power steering pump fittings or power steering gear ports to prevent entry of foreign material into the components.

REMOVAL

REMOVAL - LHD GEAR

(1) Remove cap from power steering fluid reservoir.

(2) Using a siphon pump, remove as much fluid as possible from the power steering fluid reservoir. **Use care not to damage the filter mesh below the fluid surface.**

GEAR (Continued)

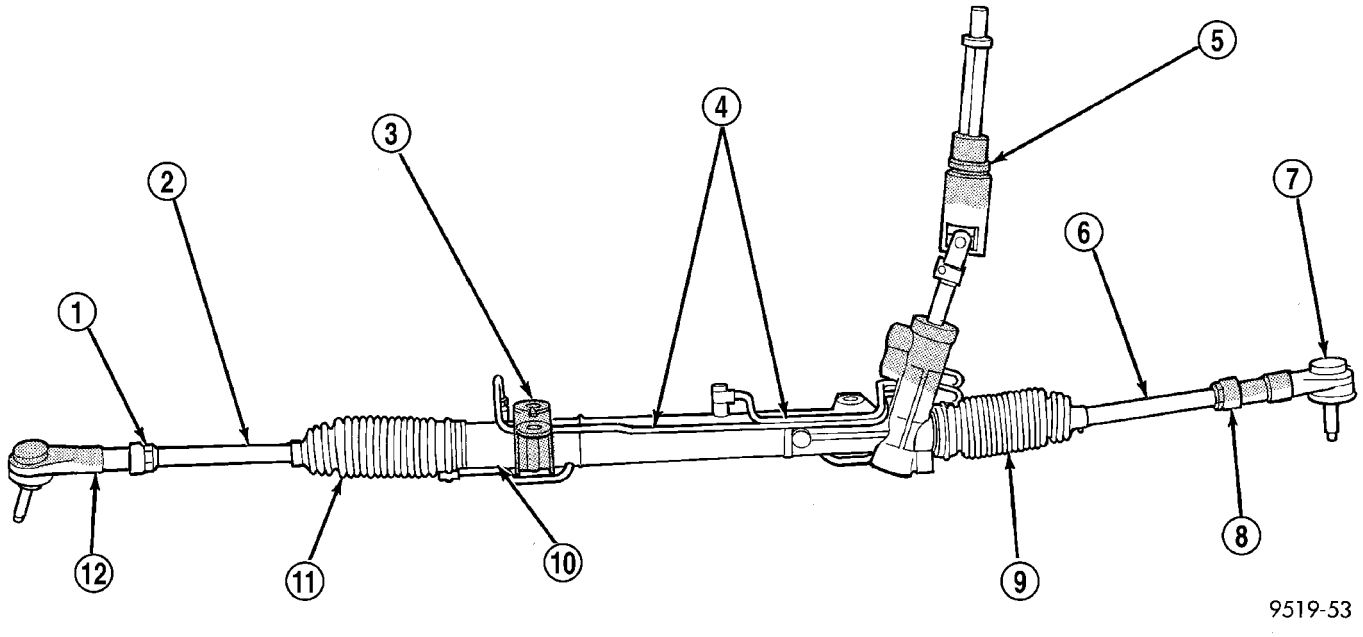

Fig. 1 Power Steering Gear (Typical)

1 - TIE ROD JAM NUT
2 - INNER TIE ROD
3 - STEERING GEAR MOUNTING BRACKET
4 - POWER STEERING GEAR FLUID LINES
5 - STEERING COLUMN INTERMEDIATE SHAFT
6 - INNER TIE ROD
7 - OUTER TIE ROD
8 - TIE ROD JAM NUT
9 - BOOT/BELLOWS
10 - STEERING GEAR BOOT BREATHER TUBE
11 - BOOT/BELLOWS
12 - OUTER TIE ROD

CAUTION: Locking the steering column in the straight-ahead position will prevent the clockspring from being accidentally over-extended when the steering column is disconnected from the intermediate steering coupler.

(3) Position the steering wheel in the STRAIGHT-AHEAD position. Lock the steering wheel in place using a steering wheel holding tool.

(4) With the vehicle on the ground, disconnect the steering column shaft coupler from the steering gear intermediate coupler (Fig. 2).

(5) Raise vehicle. (Refer to LUBRICATION & MAINTENANCE/HOISTING - STANDARD PROCEDURE)

(6) Remove front wheel and tire assemblies.

(7) Remove front emissions vapor canister. (Refer to 25 - EMISSIONS CONTROL/EVAPORATIVE EMISSIONS/VAPOR CANISTER - REMOVAL)

(8) Remove a single hose at power steering cooler and allow fluid to drain.

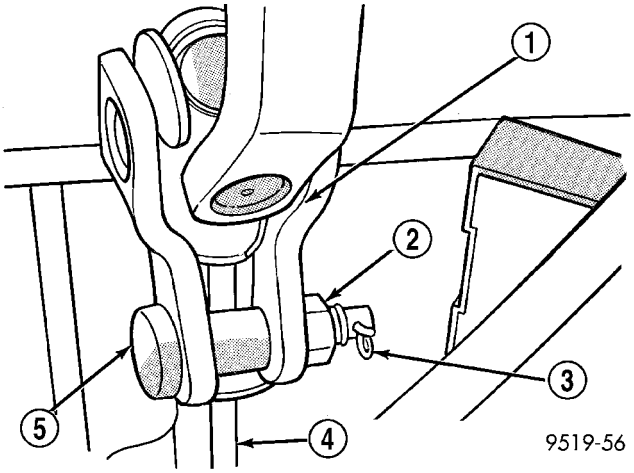

Fig. 2 Steering Column Shaft To Intermediate Shaft Attachment

1 - STEERING COLUMN SHAFT COUPLER
2 - NUT
3 - SAFETY PIN
4 - INTERMEDIATE SHAFT
5 - PINCH BOLT

GEAR (Continued)

(9) Remove 2 bolts attaching power steering cooler to cradle crossmember reinforcement (Fig. 3).

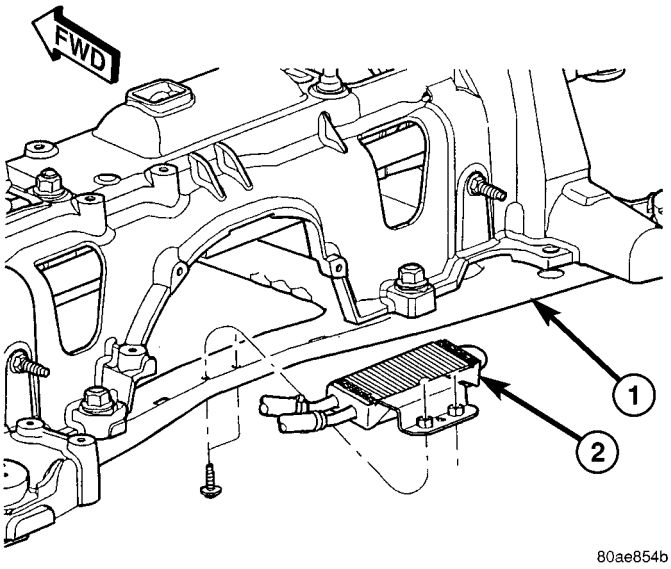

Fig. 3 Power Steering Cooler

1 - CRADLE CROSSMEMBER REINFORCEMENT
2 - POWER STEERING COOLER

(10) On both sides of vehicle, remove nut attaching outer tie rod end to steering knuckle (Fig. 4). **Remove nut by holding tie rod end stud with a socket while loosening and removing nut with wrench.**

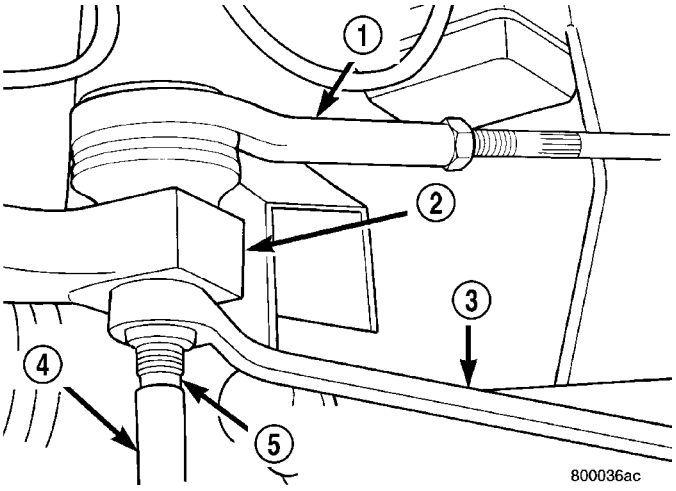

Fig. 4 Removing/Installing Tie Rod End Attaching Nut

1 - TIE ROD END
2 - STEERING KNUCKLE
3 - WRENCH
4 - SOCKET
5 - TIE ROD END STUD

(11) Remove bolts fastening leak detection pump to cradle crossmember reinforcement. (Refer to 25 - EMISSIONS CONTROL/EVAPORATIVE EMISSIONS/LEAK DETECTION PUMP - REMOVAL)

(12) Remove both outer tie rods from steering knuckles, using Puller, Special Tool C-3894–A (Fig. 5).

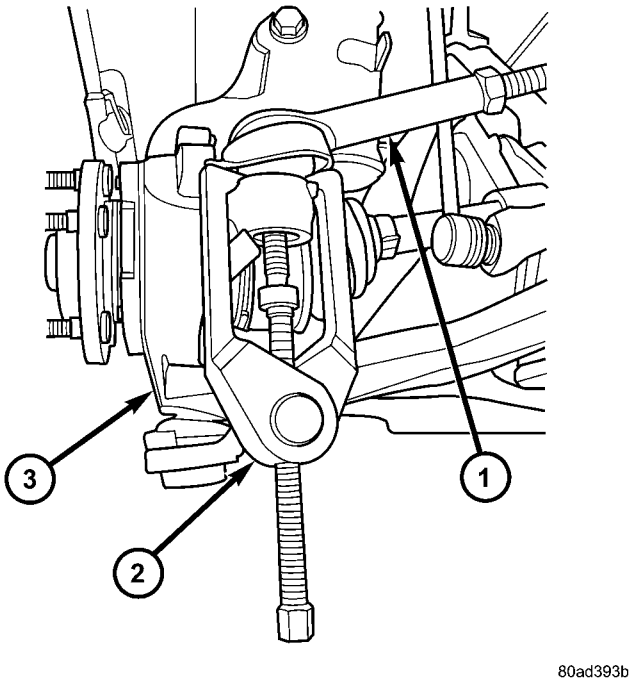

Fig. 5 Tie Rod Removal With Tool C-3894-A

1 - OUTER TIE ROD
2 - SPECIAL TOOL C-3894-A
3 - STEERING KNUCKLE

(13) Remove the lower control arm rear bushing retainer bolts located on each side of each lower control arm rear bushing.

NOTE: The bolts fastening the cradle crossmember reinforcement are of two different thread sizes. Note the location of the various sizes.

GEAR (Continued)

(14) Remove the bolts attaching the cradle crossmember reinforcement to the front suspension cradle crossmember (Fig. 6). Remove the 2 bolts fastening the reinforcement and rear of cradle crossmember to the body of the vehicle. Remove lower rear bushings, then the reinforcement.

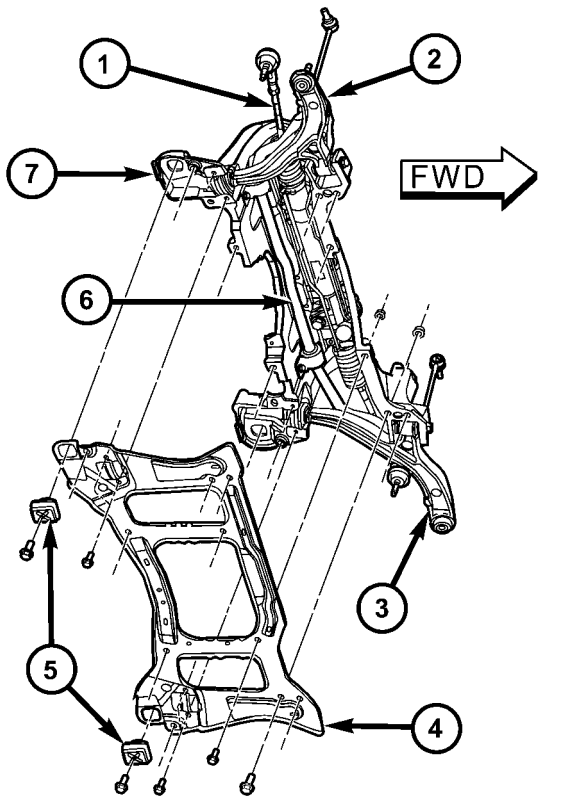

Fig. 6 Cradle Crossmember Reinforcement Attachment

1 - STEERING GEAR
2 - RIGHT LOWER CONTROL ARM
3 - LEFT LOWER CONTROL ARM
4 - CRADLE CROSSMEMBER REINFORCEMENT
5 - REAR CRADLE CROSSMEMBER ISOLATOR BUSHING
6 - STABILIZER BAR
7 - CRADLE CROSSMEMBER

(15) If the vehicle is equipped with All-Wheel-Drive, remove the power transfer unit as necessary (Refer to 21 - TRANSMISSION/TRANSAXLE/ POWER TRANSFER UNIT).

(16) Remove tube nuts and power steering pressure and return hoses from the power steering gear (Fig. 7).

(17) Remove the 3 bolts and nuts mounting the steering gear to the front suspension cradle (Fig. 8).

NOTE: The next step must be done to allow the removal of the steering gear from the front suspension cradle. The steering gear can not be removed from the vehicle with the intermediate coupler attached to the steering gear.

(18) Lower steering gear from suspension cradle enough to allow access to the intermediate coupler roll pin (Fig. 9). Install Remover/Installer Special Tool 6831A through the center of the roll pin, securing with the knurled nut (Fig. 9). Hold threaded rod stationary while turning nut, this will pull the roll pin out of the intermediate coupler.

(19) Separate the coupler from the shaft of the steering gear.

(20) Remove the power steering gear from the vehicle.

REMOVAL - RHD GEAR

(1) Remove cap from power steering fluid reservoir.

(2) Using a siphon pump, remove as much fluid as possible from the power steering fluid reservoir.

CAUTION: Locking the steering column in the straight-ahead position will prevent the clockspring from being accidentally over-extended when the steering column is disconnected from the intermediate steering coupler.

(3) Position the steering wheel in the STRAIGHT-AHEAD position. Lock the steering wheel in place using a steering wheel holding tool.

(4) With the ignition key in the locked position turn the steering wheel to the left until the steering wheel is in the locked position.

(5) With the vehicle on the ground, disconnect the steering column shaft coupler from the steering gear intermediate coupler (Fig. 2).

(6) Raise vehicle. (Refer to LUBRICATION & MAINTENANCE/HOISTING - STANDARD PROCEDURE)

(7) Remove front wheel and tire assemblies.

(8) If power steering cooler equipped, remove a hose at power steering cooler and allow fluid to drain.

(9) Remove 2 bolts attaching power steering cooler to cradle crossmember reinforcement (Fig. 3).

(10) On both sides of vehicle, remove nut attaching outer tie rod end to steering knuckle (Fig. 4). **Remove nut by holding tie rod end stud with a socket while loosening and removing nut with wrench.**

GEAR (Continued)

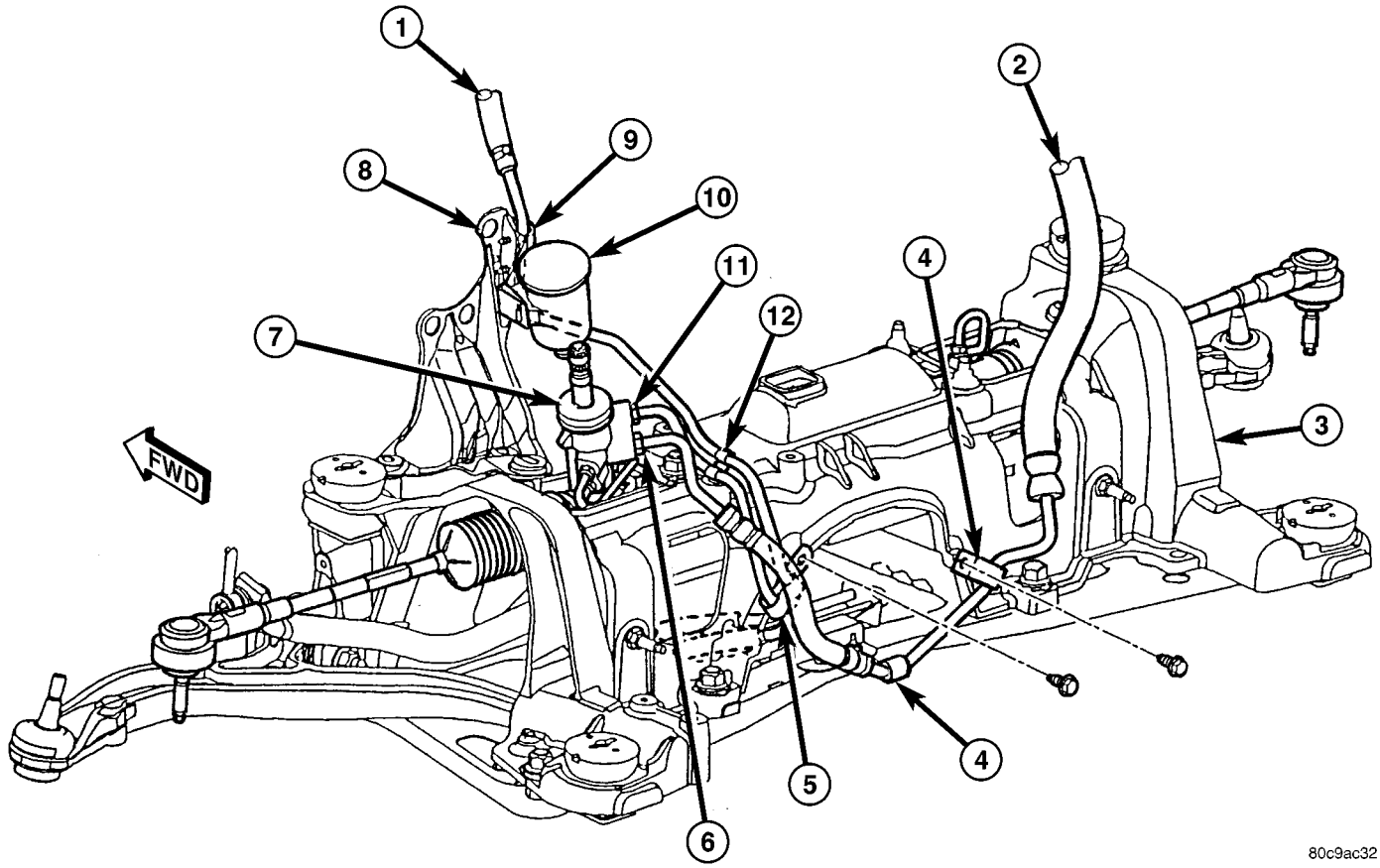

Fig. 7 Hoses To Power Steering Gear - 3.3L/3.8L Engine

1 - RETURN HOSE (TO RESERVOIR)
2 - PRESSURE HOSE (FROM PUMP)
3 - CRADLE CROSSMEMBER
4 - PRESSURE HOSE ROUTING CLAMP
5 - RETURN HOSE ROUTING CLAMP
6 - PRESSURE HOSE TUBE NUT
7 - POWER STEERING GEAR
8 - ABS BRACKET
9 - ROUTING CLIP
10 - LEAK DETECTION PUMP FILTER
11 - RETURN HOSE TUBE NUT
12 - ROUTING CLIP

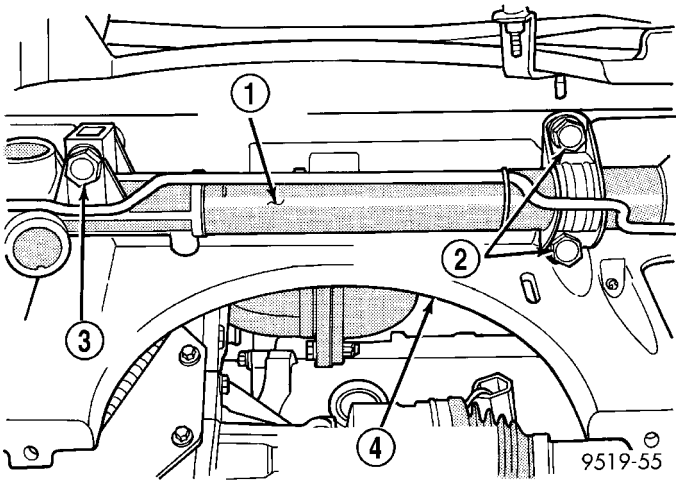

Fig. 8 Steering Gear Mounting To Suspension Cradle

1 - POWER STEERING GEAR
2 - MOUNTING BOLTS (12 MM)
3 - MOUNTING BOLT (14 MM)
4 - FRONT SUSPENSION CRADLE CROSSMEMBER

(11) Remove both tie rod ends from steering knuckles using Puller, Special Tool C-3894–A (Fig. 5).

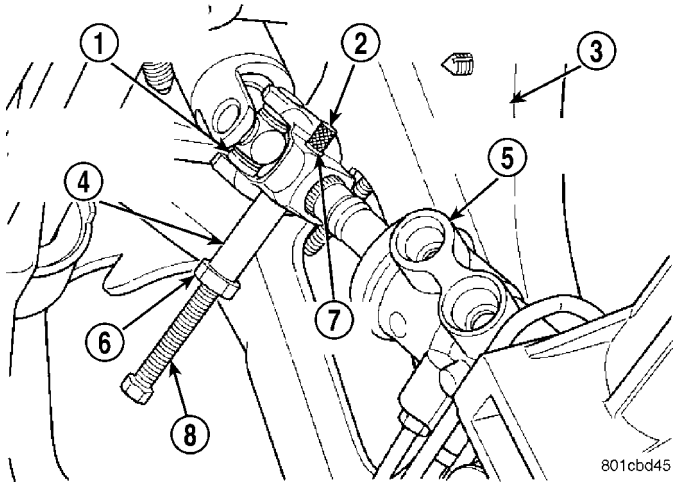

Fig. 9 Removing Roll Pin From Intermediate Coupler

1 - INTERMEDIATE COUPLER
2 - KNURLED NUT
3 - SUSPENSION CRADLE
4 - REMOVER SPECIAL TOOL 6831A
5 - STEERING GEAR
6 - NUT
7 - ROLL PIN
8 - THREADED ROD

GEAR (Continued)

(12) Remove the lower control arm rear bushing retainer bolts located on each side of each lower control arm rear bushing.

NOTE: The bolts fastening the cradle crossmember reinforcement are of two different thread sizes. Note the location of the various sizes.

(13) Remove the bolts attaching the cradle crossmember reinforcement to the front suspension cradle crossmember (Fig. 6). Remove the 2 bolts fastening the reinforcement and rear of cradle crossmember to the body of the vehicle. Remove the reinforcement.

(14) If the vehicle is equipped with All-Wheel-Drive, remove the power transfer unit (Refer to 21 - TRANSMISSION/TRANSAXLE/POWER TRANSFER UNIT - REMOVAL).

(15) Remove the power steering fluid pressure and return hoses from the power steering gear (Fig. 10).

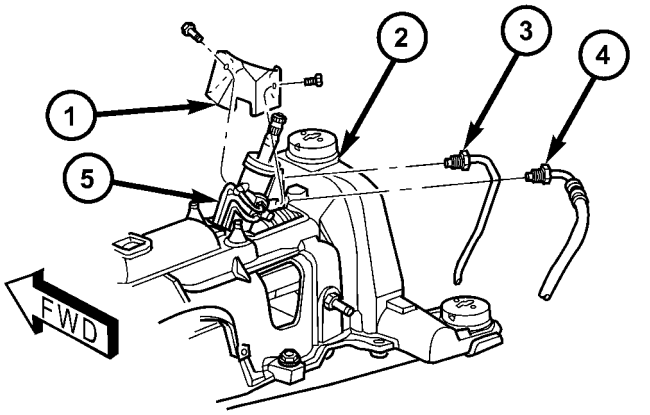

Fig. 10 RHD Gear Heat Shield And Hose Fittings

1 - HEAT SHIELD
2 - CRADLE CROSSMEMBER
3 - RETURN HOSE FITTING
4 - PRESSURE HOSE FITTING
5 - POWER STEERING GEAR

(16) Remove the routing clamp bolt securing the power steering fluid hoses to the rear of the cradle crossmember (Fig. 11). Allow the hoses to hang down out of the way.

(17) Remove the heat shield from the steering gear (Fig. 10).

(18) Remove the 2 bolts and nuts mounting the steering gear to the front suspension cradle.

NOTE: The next step must be done to allow the removal of the steering gear from the front suspension cradle. The steering gear cannot be removed from the vehicle with the intermediate coupler attached to the steering gear.

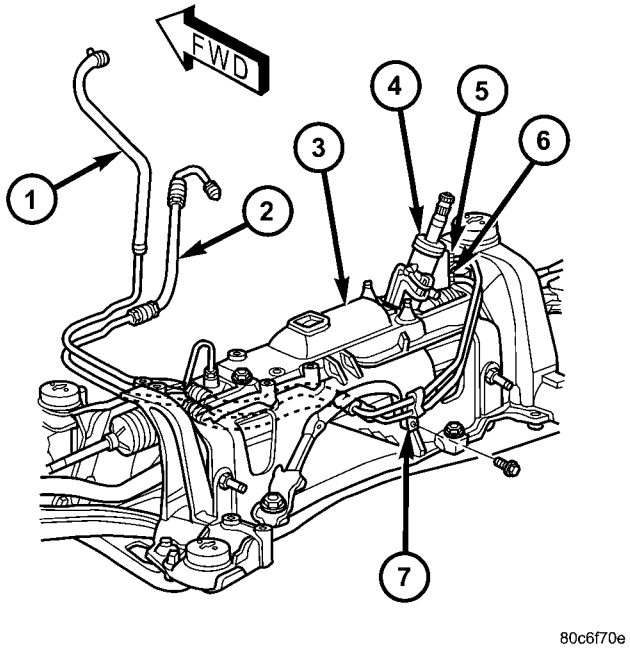

Fig. 11 RHD Power Steering Gear - 2.5L Diesel Shown

1 - RETURN HOSE
2 - PRESSURE HOSE
3 - CRADLE CROSSMEMBER
4 - POWER STEERING GEAR
5 - RETURN HOSE FITTING
6 - PRESSURE HOSE FITTING
7 - HOSE ROUTING CLAMP

(19) Lower steering gear from suspension cradle enough to allow access to the intermediate coupler roll pin (Fig. 9). Install Remover/Installer, Special Tool 6831A, through the center of the roll pin, securing with the knurled nut (Fig. 9). Hold threaded rod stationary while turning nut, this will pull the roll pin out of the intermediate coupler.

(20) Separate the coupler from the steering gear shaft.

(21) Remove the power steering gear from the vehicle.

INSTALLATION

INSTALLATION - LHD GEAR

(1) Install the power steering gear up in the front suspension cradle, leaving room to install intermediate coupler.

(2) Start the roll pin into the intermediate coupler before installing coupler on steering gear shaft. Start roll pin into coupler, using a hammer and tapping it into the coupler. Then install the intermediate coupler on the shaft of the steering gear.

GEAR (Continued)

(3) Install Remover/Installer Special Tool 6831A through the center of the roll pin, securing it with the knurled nut (Fig. 12). Hold threaded rod stationary while turning nut, this will pull the roll pin into the intermediate coupler.

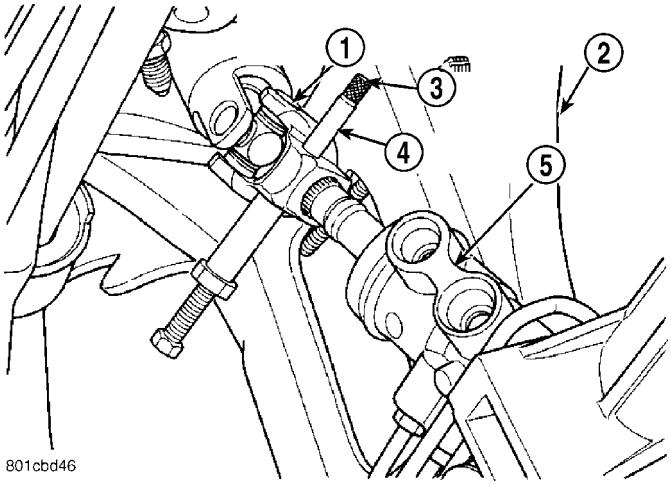

Fig. 12 Installing Roll Pin In Intermediate Coupler

1 - INTERMEDIATE SHAFT COUPLER
2 - SUSPENSION CRADLE CROSSMEMBER
3 - KNURLED NUT
4 - ROLL PIN
5 - POWER STEERING GEAR

CAUTION: Proper torque on the steering gear to suspension cradle mounting bolts is very important.

(4) Install steering gear on the front suspension cradle. Install the 3 steering gear mounting bolts and nuts (Fig. 8). Tighten the 3 mounting bolts to the following torque values:

- 14 mm bolt – 183 N·m (135 ft. lbs.) torque
- 12 mm bolt – 95 N·m (70 ft. lbs.) torque

(5) Attach the power steering fluid pressure and return hoses to the correct ports on the power steering gear (Fig. 7). Tighten the hose tube nuts at the gear to a torque of 31 N·m (275 in. lbs.).

(6) If the vehicle is equipped with All-Wheel-Drive, install the power transfer unit as necessary (Refer to 21 - TRANSMISSION/TRANSAXLE/POWER TRANSFER UNIT).

CAUTION: Proper torque on the cradle reinforcement to suspension cradle mounting bolts is very important.

(7) Install the reinforcement on the front suspension cradle crossmember and install the bolts attaching the reinforcement to the cradle crossmember (Fig. 6). Tighten the M-14 size bolts to a torque of 153 N·m (113 ft. lbs.). Tighten the M-12 size bolts to a torque of 106 N·m (78 ft. lbs.).

(8) Install the lower control arm rear bushing retainer bolts (M-10 size) through reinforcement on each side of each lower control arm rear bushing. Tighten bolts to a torque of 61 N·m (45 ft. lbs.).

(9) Install the two bolts and bushings attaching the reinforcement and rear of cradle crossmember to body of vehicle (Fig. 6). Tighten bolts to a torque of 163 N·m (120 ft. lbs.).

(10) Install outer tie rod end into steering knuckle. Start outer tie rod to steering knuckle attaching nut onto stud of tie rod end. While holding stud of tie rod end stationary using a socket (Fig. 4), tighten tie rod end to steering knuckle attaching nut. Then using a crowfoot and socket (Fig. 13), tighten the tie rod end attaching nut to a torque of 75 N·m (55 ft. lbs.).

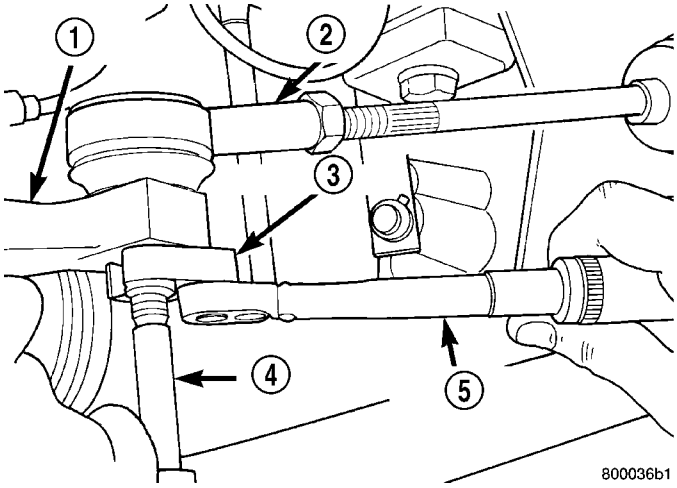

Fig. 13 Torquing Tie Rod End Attaching Nut

1 - STEERING KNUCKLE
2 - TIE ROD END
3 - CROWFOOT
4 - SOCKET
5 - TORQUE WRENCH

(11) Install leak detection pump on cradle crossmember reinforcement. (Refer to 25 - EMISSIONS CONTROL/EVAPORATIVE EMISSIONS/LEAK DETECTION PUMP - INSTALLATION)

(12) Install the power steering fluid cooler on the cradle crossmember reinforcement (Fig. 3). Install the mounting bolts and tighten to 11 N·m (100 in. lbs.). When installing mounting bolts, include pressure hose routing clamp.

(13) Reconnect previously disconnected hose at power steering cooler and install clamp.

(14) Install the front tire and wheel assemblies on vehicle. Install the wheel lug nuts and torque to 135 N·m (100 ft. lbs.).

(15) Install front emissions vapor canister. (Refer to 25 - EMISSIONS CONTROL/EVAPORATIVE EMISSIONS/VAPOR CANISTER - INSTALLATION)

(16) Lower the vehicle to a level where the interior of vehicle is accessible.

GEAR (Continued)

(17) With the wheels pointed approximately STRAIGHT-AHEAD, align the intermediate shaft with the steering column coupler. Assemble the steering column shaft coupler onto the steering gear intermediate coupler (Fig. 2). Install steering column coupler to intermediate shaft retaining pinch bolt. Tighten the pinch bolt nut to a torque of 28 N·m (250 in. lbs.).

(18) Remove the steering wheel holding tool.

(19) Fill and bleed the power steering system using the Power Steering Pump Initial Operation Procedure. (Refer to 19 - STEERING/PUMP - STANDARD PROCEDURE)

(20) Inspect system for leaks.

(21) Adjust front toe (Refer to 2 - SUSPENSION/WHEEL ALIGNMENT - STANDARD PROCEDURE).

INSTALLATION - RHD GEAR

(1) Install the steering gear up in the front suspension cradle crossmember, leaving room to install intermediate coupler.

(2) Start the roll pin into the intermediate coupler before installing coupler on steering gear shaft. Start roll pin into coupler, using a hammer and tapping it into the coupler. Then install the intermediate coupler on the shaft of the steering gear.

(3) Install Remover/Installer Special Tool 6831A through the center of the roll pin, securing it with the knurled nut (Fig. 12). Hold threaded rod stationary while turning nut. This will pull the roll pin into the intermediate coupler.

(4) Install power steering gear on the front suspension cradle. Install the 2 steering gear mounting bolts and nuts. Tighten the M-14 size steering gear to suspension cradle mounting bolt to a torque of 183 N·m (135 ft. lbs.). Tighten the M-12 size steering gear to suspension cradle mounting bolt to a torque of 95 N·m (70 ft. lbs.).

CAUTION: Proper torque on the steering gear to suspension cradle mounting bolts is very important.

(5) Install the heat shield on the steering gear (Fig. 10).

(6) Attach the power steering fluid pressure and return hoses to the proper fittings on the steering gear (Fig. 10). Do not fully tighten the fittings at this time.

(7) Install the routing clamp with the bolt securing the power steering fluid hoses to the rear of the cradle crossmember (Fig. 11).

(8) Using a crowfoot wrench on a torque wrench, tighten the power steering fluid hose tube nuts at the gear to a torque of 31 N·m (275 in. lbs.).

(9) Install tie rod end into steering knuckle. Start tie rod end to steering knuckle attaching nut onto stud of tie rod end. While holding stud of tie rod end stationary using a socket (Fig. 4), tighten tie rod end to steering knuckle attaching nut. Then using a crowfoot and socket (Fig. 13), tighten the tie rod end attaching nut to a torque of 75 N·m (55 ft. lbs.).

(10) If the vehicle is equipped with All-Wheel-Drive, install the power transfer unit (Refer to 21 - TRANSMISSION/TRANSAXLE/POWER TRANSFER UNIT - INSTALLATION).

CAUTION: Proper torque on the cradle reinforcement to suspension cradle mounting bolts is very important.

(11) Install the reinforcement on the front suspension cradle crossmember and install the bolts attaching the reinforcement to the cradle crossmember (Fig. 6). Tighten the M-14 size bolts to a torque of 163 N·m (120 ft. lbs.). Tighten the M-12 size bolts to a torque of 108 N·m (80 ft. lbs.).

(12) Install the lower control arm rear bushing retainer bolts through reinforcement on each side of each lower control arm rear bushing. Tighten bolts to a torque of 61 N·m (45 ft. lbs.).

(13) Install the two bolts and bushings attaching the reinforcement and rear of cradle crossmember to body of vehicle (Fig. 6). Tighten bolts to a torque of 163 N·m (120 ft. lbs.).

(14) If power steering cooler equipped, install the previously disconnected power steering cooler hose on the cooler. Install the clamp.

(15) If power steering cooler equipped, install the power steering fluid cooler on the cradle crossmember reinforcement (Fig. 3). Install the mounting bolts and tighten to 11 N·m (100 in. lbs.).

(16) Install the front tire and wheel assemblies on vehicle. Install the wheel mounting lug nuts and tighten to a torque to 135 N·m (100 ft. lbs.).

(17) Lower the vehicle to a level were the interior of vehicle is accessible (keeping tires off the ground).

(18) With the wheels pointed approximately STRAIGHT-AHEAD, align the intermediate shaft with the steering column coupler. Assemble the steering column shaft coupler onto the steering gear intermediate coupler (Fig. 2). Install steering column coupler to intermediate shaft retaining pinch bolt. Tighten the pinch bolt nut to a torque of 28 N·m (250 in. lbs.).

(19) Remove the steering wheel holding tool.

(20) Perform the POWER STEERING PUMP INITIAL OPERATION procedure to properly fill and bleed the power steering system. (Refer to 19 - STEERING/PUMP - STANDARD PROCEDURE)

(21) Inspect for leaks.

(22) Adjust front wheel toe (Refer to 2 - SUSPENSION/WHEEL ALIGNMENT - STANDARD PROCEDURE).

GEAR (Continued)

SPECIAL TOOLS

POWER STEERING GEAR

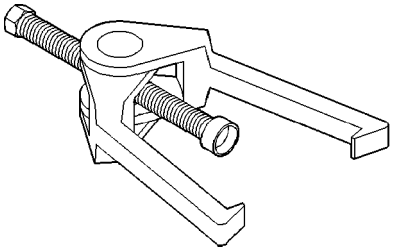

Puller C-3894A

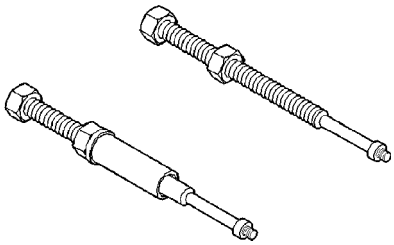

Remover/Installer Steering Shaft Roll Pin 6831A

OUTER TIE ROD

REMOVAL

(1) Loosen inner tie rod to outer tie rod jam nut (Fig. 14).

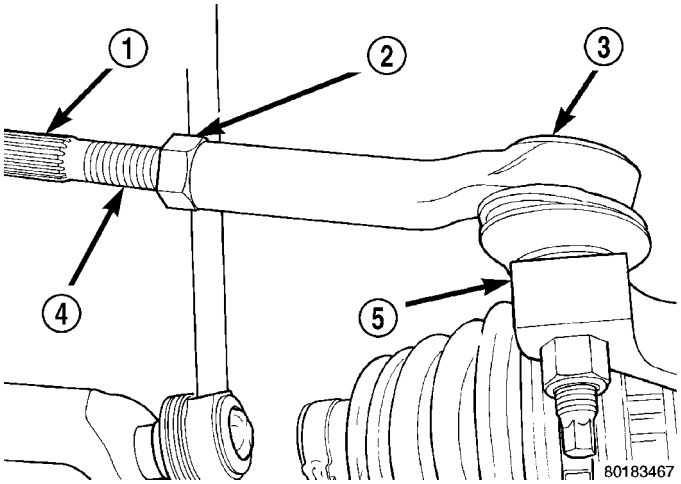

Fig. 14 Inner To Outer Tie Rod Jam Nut

1 - INNER TIE ROD SERRATION
2 - OUTER TIE ROD JAM NUT
3 - OUTER TIE ROD END
4 - INNER TIE ROD
5 - STEERING KNUCKLE

(2) Remove nut attaching outer tie rod end to steering knuckle (Fig. 15). The nut is to be removed from tie rod end by holding tie rod end stud with a 11/32 socket while loosening and removing nut with a wrench.

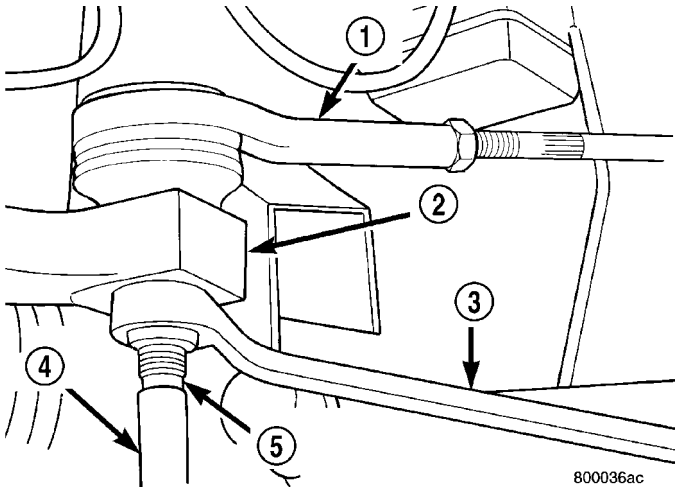

Fig. 15 Tie Rod End Attaching Nut (Typical)

1 - TIE ROD END
2 - STEERING KNUCKLE
3 - WRENCH
4 - SOCKET
5 - TIE ROD END STUD

(3) Remove the tie rod end stud from steering knuckle arm, using Remover, Special Tool C-3894–A (Fig. 16).

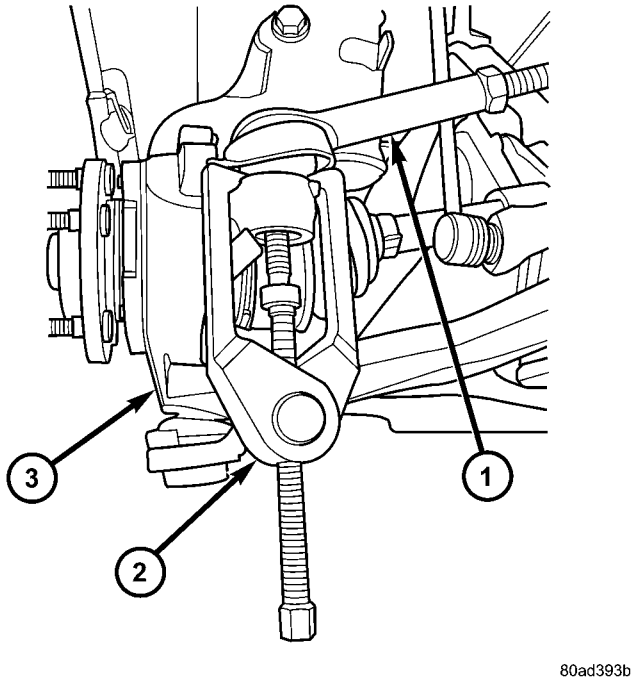

Fig. 16 TIE ROD REMOVAL WITH TOOL C-3894-A

1 - OUTER TIE ROD
2 - SPECIAL TOOL C-3894-A
3 - STEERING KNUCKLE

OUTER TIE ROD (Continued)

(4) Remove outer tie rod end by un-threading it from the inner tie rod.

INSTALLATION

NOTE: Before installing the outer tie rod, make sure the jam nut is on inner tie rod (Fig. 14).

(1) Install outer tie rod onto inner tie rod.
(2) Do not tighten jam nut.
(3) Install tie rod end into the steering knuckle. Start tie rod end to steering knuckle attaching nut onto stud of tie rod end. While holding stud of tie rod end stationary, tighten tie rod end to steering knuckle attaching nut (Fig. 15). Then using a crowfoot and 11/32 socket (Fig. 17), torque tie rod end attaching nut to 75 N·m (55 ft. lbs.).
(4) Tighten tie rod jam nut (Fig. 14) to 75 N·m (55 ft. lbs.) torque.

CAUTION: During this procedure do not allow the steering gear boot to become twisted.

(5) Adjust the front toe setting on the vehicle (Refer to 2 - SUSPENSION/WHEEL ALIGNMENT - STANDARD PROCEDURE).

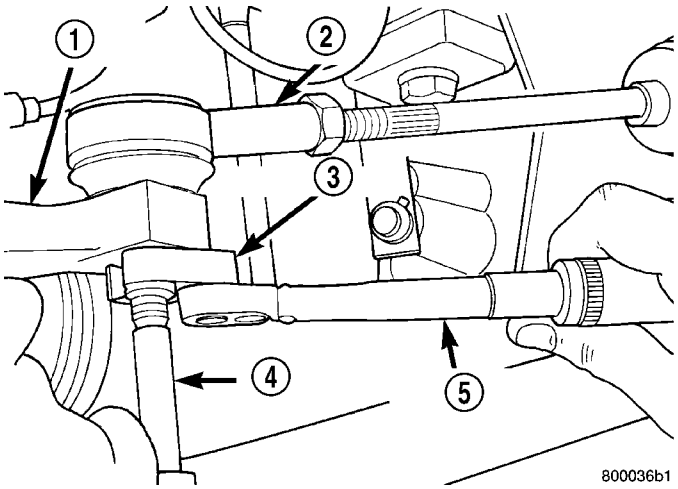

Fig. 17 Torquing Tie Rod End Attaching Nut

1 - STEERING KNUCKLE
2 - TIE ROD END
3 - CROWFOOT
4 - SOCKET
5 - TORQUE WRENCH

PUMP

TABLE OF CONTENTS

page

PUMP
DESCRIPTION
DESCRIPTION - PUMP (2.4L/3.3L/3.8L ENGINE) . . . 36
DESCRIPTION - PUMP (DIESEL) . . . 37
OPERATION . . . 37
WARNING . . . 37
CAUTION . . . 37
STANDARD PROCEDURE - POWER STEERING PUMP INITIAL OPERATION . . . 37
REMOVAL
REMOVAL - PUMP (2.4L ENGINE) . . . 38
REMOVAL - PUMP (3.3L/3.8L ENGINE) . . . 40
REMOVAL - PUMP (DIESEL) . . . 41
DISASSEMBLY - PUMP (PULLEY) . . . 41
ASSEMBLY - PUMP (PULLEY) . . . 42
INSTALLATION
INSTALLATION - PUMP (2.4L ENGINE) . . . 43
INSTALLATION - PUMP (3.3L/3.8L ENGINE) . 43
INSTALLATION - PUMP (DIESEL) . . . 43
SPECIAL TOOLS
POWER STEERING PUMP . . . 44
FLUID
STANDARD PROCEDURE - POWER STEERING FLUID LEVEL CHECKING . . . 44
FLUID COOLER
DESCRIPTION . . . 45
OPERATION . . . 45
REMOVAL . . . 45
INSTALLATION . . . 45
HOSE - POWER STEERING PRESSURE
REMOVAL
REMOVAL - 2.4L ENGINE . . . 46
REMOVAL - 3.3L/3.8L ENGINE . . . 46
INSTALLATION
INSTALLATION - 2.4L ENGINE . . . 47
INSTALLATION - 3.3L/3.8L ENGINE . . . 48
HOSE - POWER STEERING RETURN
REMOVAL
REMOVAL - 2.4L ENGINE . . . 49
REMOVAL - 3.3L/3.8L ENGINE . . . 49
INSTALLATION
INSTALLATION - 2.4L ENGINE . . . 50
INSTALLATION - 3.3L/3.8L ENGINE . . . 50
HOSE - POWER STEERING SUPPLY
REMOVAL
REMOVAL - 2.4L ENGINE . . . 51
REMOVAL - 3.3L/3.8L ENGINE . . . 51
INSTALLATION
INSTALLATION - 2.4L ENGINE . . . 51
INSTALLATION - 3.3L/3.8L ENGINE . . . 52
RESERVOIR - POWER STEERING FLUID
DESCRIPTION
DESCRIPTION - 2.4L/3.3L/3.8L ENGINE . . . 52
DESCRIPTION - DIESEL . . . 52
OPERATION . . . 52
REMOVAL
REMOVAL - 2.4L ENGINE . . . 52
REMOVAL - 3.3L/3.8L ENGINE . . . 52
REMOVAL - DIESEL . . . 52
INSTALLATION
INSTALLATION - 2.4L ENGINE . . . 53
INSTALLATION - 3.3L/3.8L ENGINE . . . 53
INSTALLATION - DIESEL . . . 53

PUMP

DESCRIPTION

DESCRIPTION - PUMP (2.4L/3.3L/3.8L ENGINE)

Hydraulic pressure for the operation of the power steering gear is provided by a belt driven power steering pump. The power steering pump is mounted on the back side of the engine on all engine applications. The pumps are different depending on the engine option. The pump for the 2.4L engine is made out of cast iron and steel (Fig. 1). The pump used on the 3.3L/3.8L engine is made of aluminum (Fig. 2).

The pump for the 3.3L/3.8L engine does not have a return fitting as the pump for the 2.4L engine does. The power steering return hose on the 3.3L/3.8L engine goes to the reservoir instead of the pump.

PUMP (Continued)

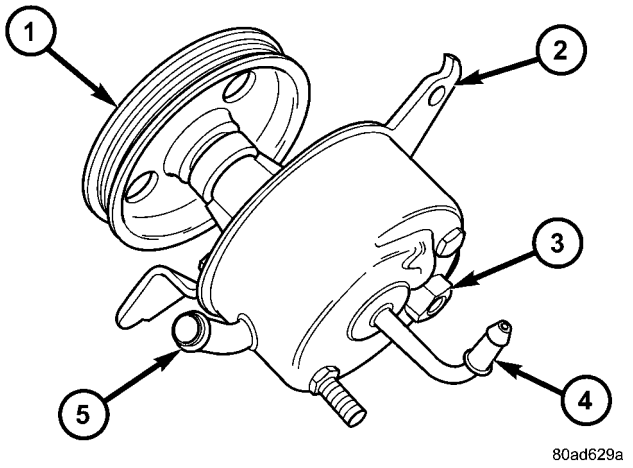

Fig. 1 POWER STEERING PUMP (2.4L)

1 - PULLEY
2 - BRACKET
3 - PRESSURE FITTING
4 - RETURN FITTING
5 - SUPPLY FITTING

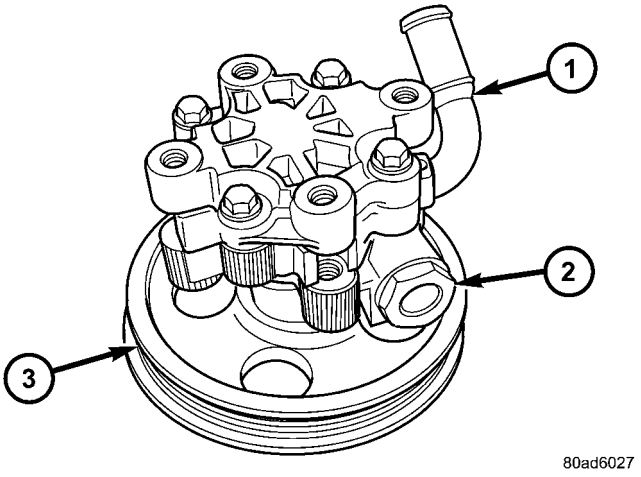

Fig. 2 POWER STEERING PUMP (3.3L/3.8L)

1 - SUPPLY FITTING
2 - PRESSURE FITTING
3 - PULLEY

DESCRIPTION - PUMP (DIESEL)

Hydraulic pressure for the operation of the power steering gear is provided by a belt driven power steering pump. The power steering pump is mounted front lower right corner of the engine (Fig. 13).

The pump has a supply fitting for fluid coming from the reservoir and a pressure port for exiting fluid that is headed for the steering gear.

OPERATION

The power steering pump is a constant displacement vane type pump. The 2.4L pump has an integral fluid reservoir and there is a secondary remote non-flow reservoir which acts only as a fluid fill and check point. The 3.3L/3.8L pump houses very little fluid and is therefore supplied by a remote flow through reservoir.

WARNING

WARNING: POWER STEERING FLUID, ENGINE PARTS AND EXHAUST SYSTEM MAY BE EXTREMELY HOT IF ENGINE HAS BEEN RUNNING. DO NOT START ENGINE WITH ANY LOOSE OR DISCONNECTED HOSES. DO NOT ALLOW HOSES TO TOUCH HOT EXHAUST MANIFOLD OR CATALYST.

WARNING: FLUID LEVEL SHOULD BE CHECKED WITH THE ENGINE OFF TO PREVENT PERSONAL INJURY FROM MOVING PARTS.

CAUTION

CAUTION: When the system is open, cap all open ends of the hoses, power steering pump fittings or power steering gear ports to prevent entry of foreign material into the components.

STANDARD PROCEDURE - POWER STEERING PUMP INITIAL OPERATION

WARNING: FLUID LEVEL SHOULD BE CHECKED AND ADJUSTED WITH ENGINE OFF TO PREVENT INJURY FROM MOVING ENGINE COMPONENTS.

CAUTION: Use only Mopar® Automatic Transmission Fluid (MS-9602) in power steering system. Use of other Mopar® power steering fluids (MS5931 and MS9933) should be avoided to ensure peak performance of the power steering system under all operating conditions. Do not overfill.

PUMP (Continued)

Read the fluid level through the side of the power steering fluid reservoir. The fluid level should indicate **"FILL RANGE"** when the fluid is at a temperature of approximately 21°C to 27°C (70°F to 80°F).

(1) Wipe the filler cap and area clean, then remove the cap.

(2) Fill the fluid reservoir to the proper level and let the fluid settle for at least two (2) minutes.

(3) Start the engine and let run for a few seconds, then turn the engine off.

(4) Add fluid if necessary. Repeat the above steps until the fluid level remains constant after running the engine.

(5) Raise the front wheels off the ground.

(6) Start the engine.

(7) Slowly turn the steering wheel right and left, lightly contacting the wheel stops.

(8) Add fluid if necessary.

(9) Lower the vehicle, then turn the steering wheel slowly from lock-to-lock.

(10) Stop the engine. Check the fluid level and refill as required.

(11) If the fluid is extremely foamy, allow the vehicle to stabilize a few minutes, then repeat the above procedure.

REMOVAL

REMOVAL - PUMP (2.4L ENGINE)

(1) Remove the (-) negative battery cable from the battery and isolate cable.

(2) Remove the cap from the power steering fluid reservoir.

(3) Using a siphon pump, remove as much power steering fluid as possible from the power steering fluid reservoir.

(4) Raise the vehicle on jack stands or centered on a frame contact type hoist. See Hoisting in Lubrication and Maintenance.

(5) Disconnect the oxygen sensor wiring harness from the vehicle wiring harness at the rear engine mount bracket.

NOTE: The exhaust system needs to be removed from the engine to allow for an area to remove the power steering pump from the vehicle.

(6) Remove the four bolts and flag nuts securing the catalytic converter from the exhaust manifold (Fig. 3).

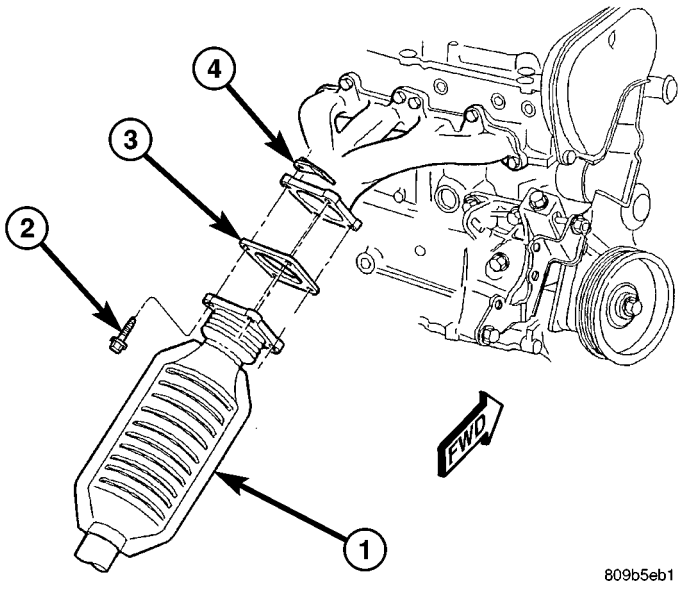

Fig. 3 Catalytic Converter to Exhaust Manifold

1 - CATALYTIC CONVERTER
2 - BOLT
3 - GASKET
4 - FLAG NUT

(7) Disconnect all the exhaust system isolators/hangers from the brackets on the exhaust system (2 at the mufflers and 1 at the resonator) (Fig. 4).

(8) Remove the exhaust system by moving it as far rearward, then lowering the front below the crossmember and out of the vehicle.

(9) Remove the power steering fluid supply hose from the fitting on the power steering pump. Drain off excess power steering fluid from hose.

(10) Move the heat sleeve on the power steering return hose to expose the hose connection at the pump (Fig. 5). Remove the hose from the power steering Pump. Allow the remaining power steering fluid to drain from the power steering pump and reservoir through the removed return hose.

(11) Remove the power steering fluid pressure line from the power steering pump (Fig. 6). Drain excess power steering fluid from tube.

PUMP (Continued)

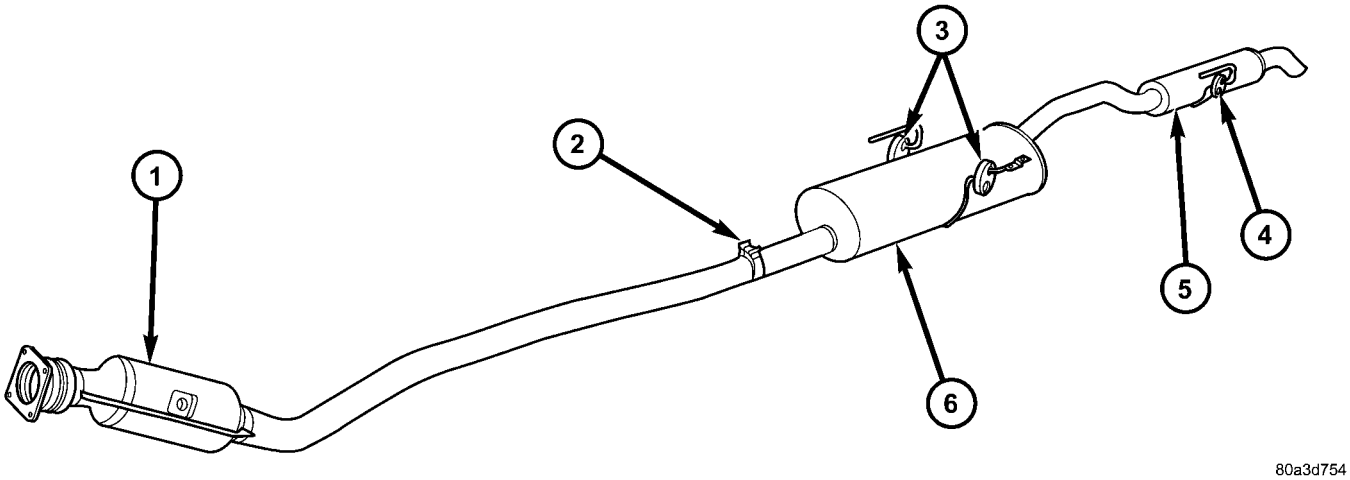

Fig. 4 Exhaust System - Typical (All Vehicles)

1 - CATALYTIC CONVERTER
2 - BAND CLAMP
3 - SUPPORTS - MUFFLER
4 - SUPPORT - RESONATOR
5 - RESONATOR
6 - MUFFLER

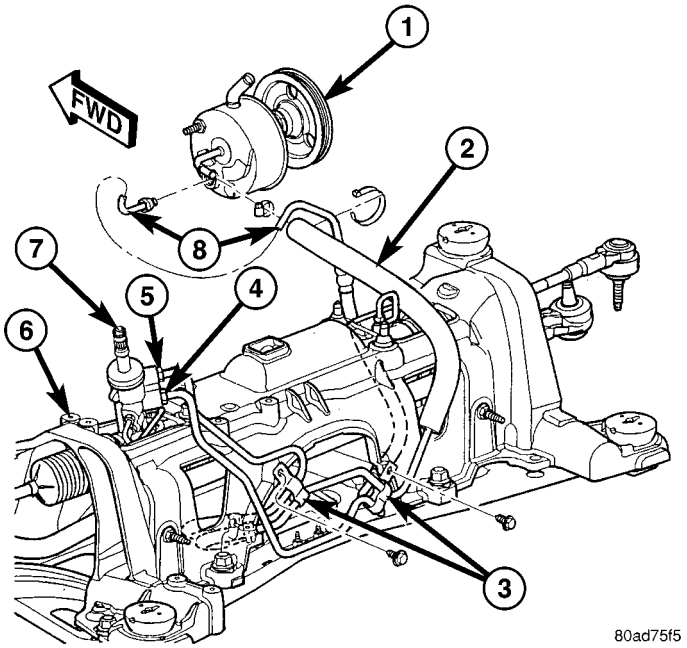

Fig. 5 Pressure And Return Hoses - 2.4L

1 - POWER STEERING PUMP
2 - RETURN HOSE (HEAT SLEEVE COVERED)
3 - ROUTING CLAMPS
4 - PRESSURE HOSE TUBE NUT
5 - RETURN HOSE TUBE NUT
6 - CRADLE CROSSMEMBER
7 - POWER STEERING GEAR
8 - PRESSURE HOSE

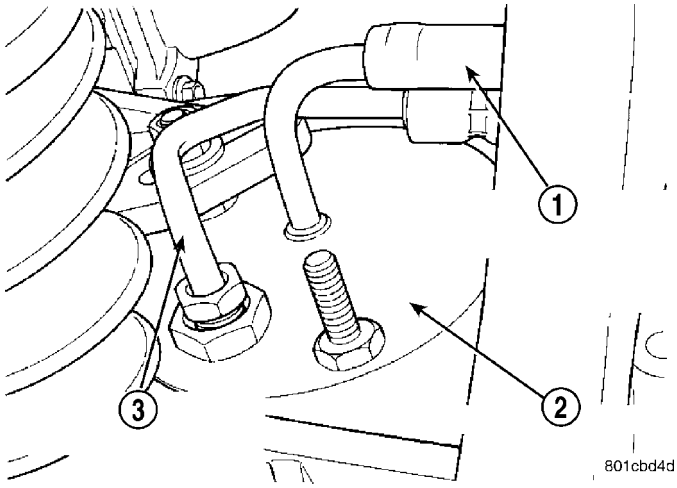

Fig. 6 Power Steering Fluid Pressure And Return Hose

1 - POWER STEERING FLUID RETURN HOSE
2 - POWER STEERING PUMP
3 - POWER STEERING FLUID PRESSURE HOSE

PUMP (Continued)

(12) Remove the fasteners, then the accessory drive splash shield.

(13) Remove the adjuster nut attaching rear of power steering pump to the cast mounting bracket. (Fig. 7)

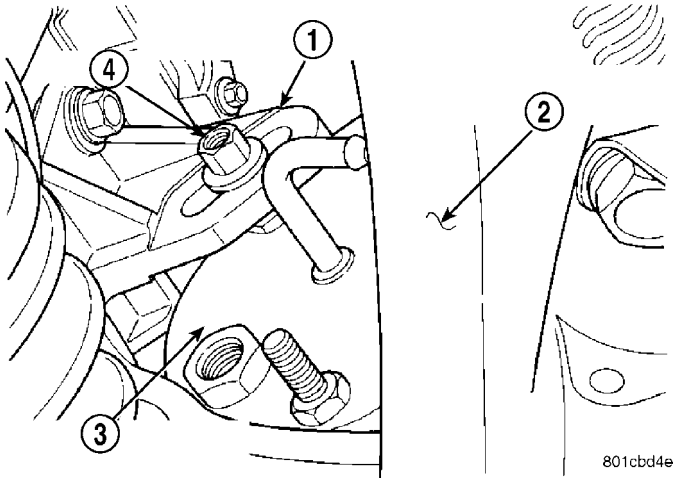

Fig. 7 Power Steering Pump Attaching Nut

1 - POWER STEERING PUMP MOUNTING BRACKET
2 - FRONT SUSPENSION CRADLE
3 - POWER STEERING PUMP
4 - ADJUSTER NUT

(14) Remove the front adjuster nut and the lower pivot bolt (Fig. 8) attaching power steering pump bracket to cast bracket.

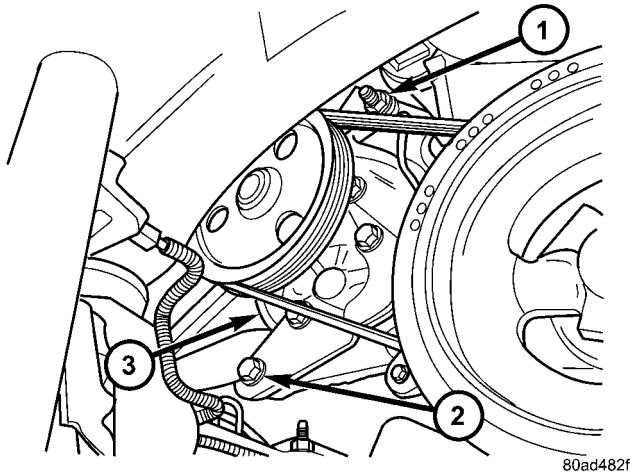

Fig. 8 Pump Front Mounting

1 - ADJUSTER NUT
2 - PIVOT BOLT
3 - PUMP

(15) Remove the drive belt from the power steering pump pulley.

(16) Remove the power steering pump and the front bracket from the cast bracket on the engine as an assembly through the exhaust tunnel.

(17) Remove the 3 bolts attaching the front bracket to the power steering pump and separate the power steering pump from the front bracket.

(18) If the power steering pump pulley needs to be transferred, (Refer to 19 - STEERING/PUMP - DISASSEMBLY).

REMOVAL - PUMP (3.3L/3.8L ENGINE)

(1) Remove the (-) negative battery cable from the battery and isolate cable.

(2) Remove the wiper module (unit)(Refer to 8 - ELECTRICAL/WIPERS/WASHERS/WIPER MODULE - REMOVAL).

(3) Raise the vehicle. (Refer to LUBRICATION & MAINTENANCE/HOISTING - STANDARD PROCEDURE)

(4) Remove the drive belt splash shield.

(5) Remove the pressure hose routing bracket bolt (Fig. 9).

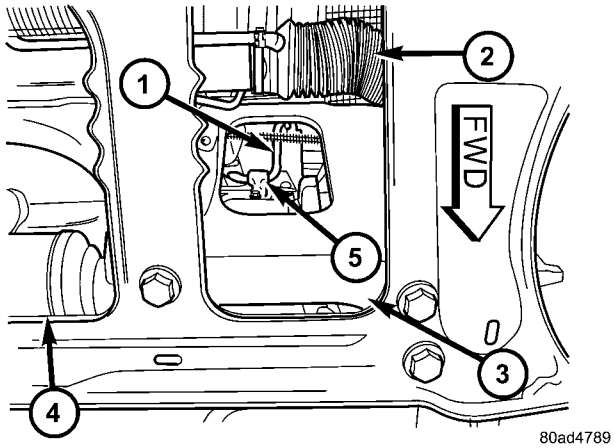

Fig. 9 Pressure Hose Routing Clamp

1 - PRESSURE HOSE TUBE
2 - STEERING GEAR
3 - CRADLE CROSSMEMBER
4 - DRIVESHAFT
5 - ROUTING CLAMP BRACKET

(6) lower the vehicle.

(7) Remove cap from power steering fluid reservoir.

(8) Using a siphon pump, remove as much power steering fluid as possible from the power steering fluid reservoir.

(9) Disconnect the pressure hose from the pump (Fig. 10).

(10) Disconnect the fluid supply hose from the pump (Fig. 10).

PUMP (Continued)

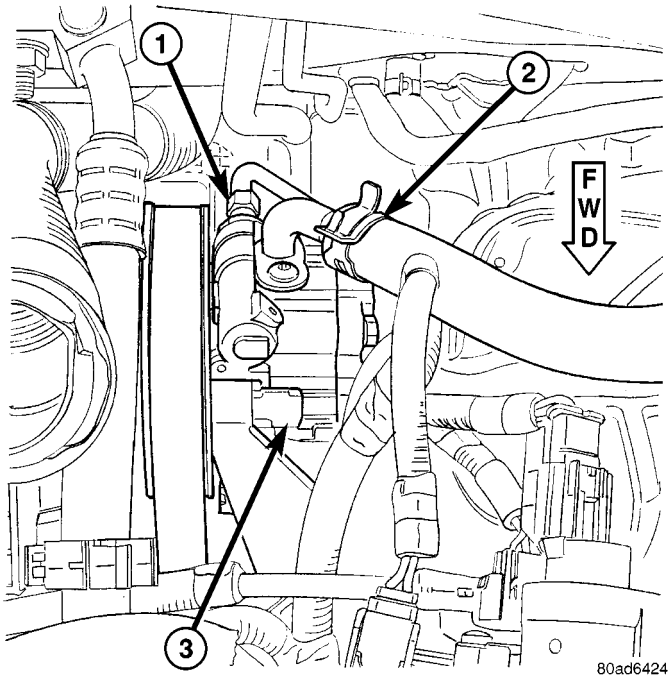

Fig. 10 Supply And Pressure Hoses At Pump

1 - PRESSURE HOSE AND FITTING
2 - SUPPLY HOSE AND CLAMP
3 - POWER STEERING PUMP

(11) Remove the three front mounting bolts through the pulley (Fig. 11)

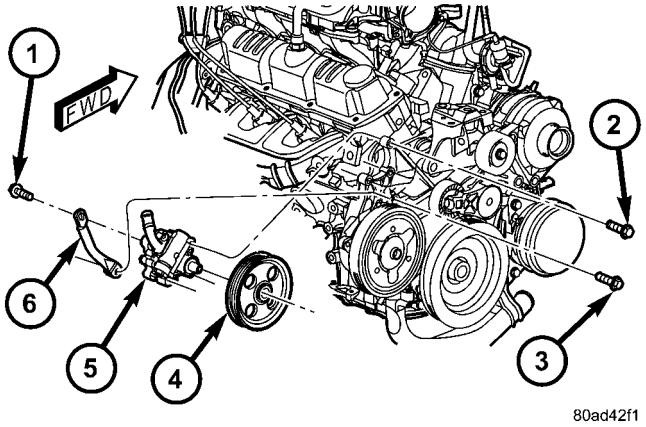

Fig. 11 Pump Mounting

1 - PUMP REAR MOUNTING BOLT (2001 ONLY)
2 - PUMP FRONT MOUNTING BOLT (3)
3 - TIMING CHAIN COVER AND PUMP BRACKET THRU BOLT (2001 ONLY)
4 - PUMP BELT PULLEY
5 - POWER STEERING PUMP
6 - BRACKET (2001 ONLY)

(12) Remove the pump (with pulley) through the engine compartment rocking it over the aluminum bracket.

REMOVAL - PUMP (DIESEL)

(1) Remove the negative (-) battery cable from the battery and isolate cable.

(2) Remove the fill cap from the power steering fluid reservoir.

(3) Using a siphon pump, remove as much power steering fluid as possible from the fluid reservoir.

(4) Raise the vehicle. (Refer to LUBRICATION & MAINTENANCE/HOISTING - STANDARD PROCEDURE)

(5) Remove the splash shields from below the engine compartment.

(6) Remove the accessory drive belt from the power steering pump pulley. (Refer to 7 - COOLING/ACCESSORY DRIVE/DRIVE BELTS - REMOVAL)

(7) Disconnect the fluid supply hose from the pump (Fig. 12).

(8) Disconnect the pressure hose from the pump (Fig. 12).

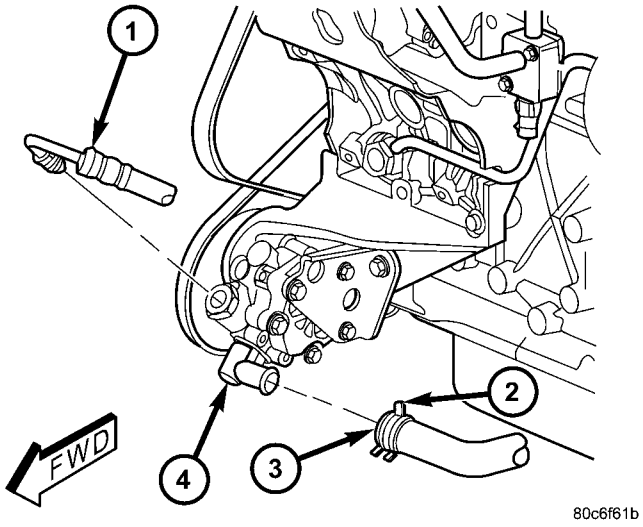

Fig. 12 Power Steering Pump - Diesel

1 - PRESSURE HOSE
2 - HOSE CLAMP
3 - SUPPLY HOSE
4 - POWER STEERING PUMP

(9) Remove the bolt fastening the stamped bracket on the rear of the pump to the cast bracket (Fig. 13).

(10) Remove the three front mounting bolts through the pulley.

(11) Remove the pump from the cast bracket and vehicle.

DISASSEMBLY - PUMP (PULLEY)

The only serviceable part of the power steering pump is the pulley. The procedure following is for removal and installation of the pulley from the pump once the pump is removed from the vehicle.

PUMP (Continued)

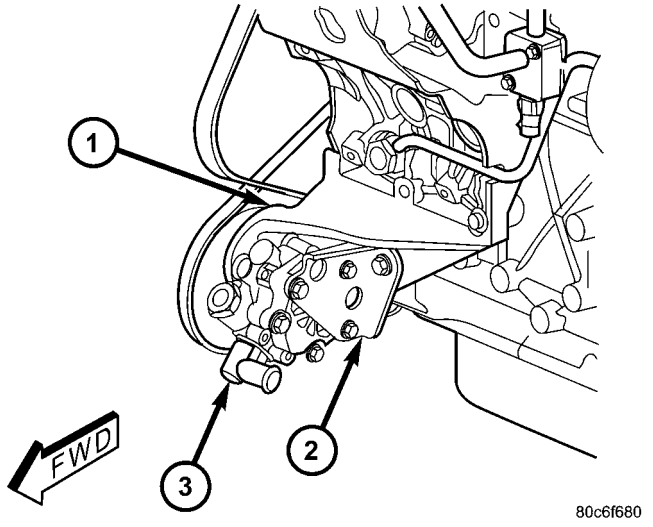

Fig. 13 Pump And Brackets - Diesel

1 - CAST BRACKET
2 - STAMPED BRACKET
3 - POWER STEERING PUMP

(1) Remove the power steering pump from the vehicle. Refer to Removal And Installation in this section of the service manual.

(2) Remove the pulley from the shaft of the power steering pump using Puller C-4333 (Fig. 14).

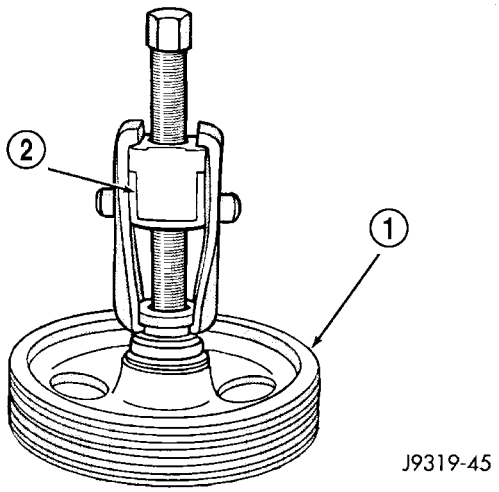

Fig. 14 Pulley Removal

1 - POWER STEERING PUMP DRIVE PULLEY
2 - SPECIAL TOOL C-4333

CAUTION: Do not hammer on power steering pump pulley. This will damage the pulley and the power steering pump.

(3) Replace pulley if it is found to be bent, cracked, or loose.

ASSEMBLY - PUMP (PULLEY)

The only serviceable part of the power steering pump is the pulley. The procedure following is for removal and installation of the pulley from the pump once the pump is removed from the vehicle.

(1) Install the pulley with Installer C-4063 (Fig. 15). Do not use the tool adapters.

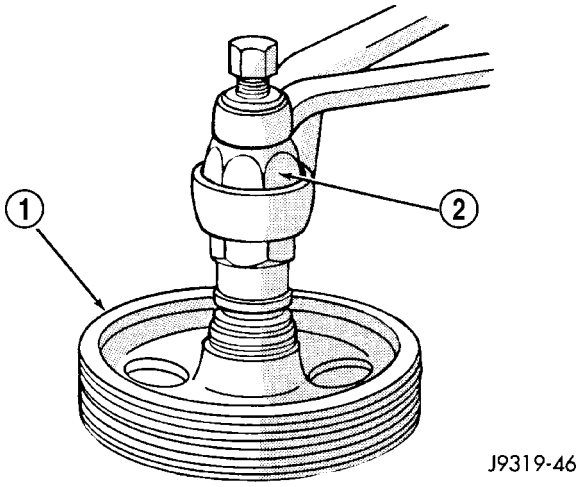

Fig. 15 Pulley Installation

1 - POWER STEERING PUMP DRIVE PULLEY
2 - SPECIAL TOOL C-4063–A

(2) Ensure that the tool and the pulley remain aligned with the pump shaft. Prevent the pulley from being cocked on the shaft.

(3) Install the pulley until it is flush with the end of the power steering pump shaft (Fig. 16).

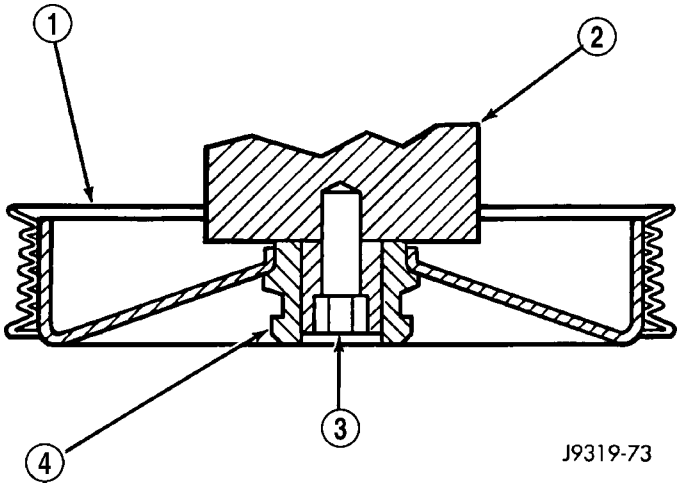

Fig. 16 Pulley To Pump Shaft Location

1 - PULLEY
2 - PUMP BODY
3 - PUMP SHAFT
4 - HUB

(4) Install the power steering pump on the vehicle.

PUMP (Continued)

INSTALLATION

INSTALLATION - PUMP (2.4L ENGINE)

(1) Install power steering pump back in vehicle using the reverse order of its removal through the exhaust tunnel of the vehicle.

(2) Install the power steering pump on its cast mounting bracket (Fig. 7), then install the nut and bolt attaching the front bracket to the cast bracket (Fig. 8). **Do not fully tighten at this time.**.

(3) Install the rear nut (Fig. 7).

(4) Install the power steering pump drive belt on pulley and adjust (Refer to 7 - COOLING/ACCESSORY DRIVE/DRIVE BELTS - INSTALLATION).

(5) Tighten the two adjustment slot bolts and the one pivot bolt to 54 N·m (40 ft. lbs.) torque.

(6) Install the accessory drive splash shield.

NOTE: Before installing power steering fluid pressure hose on power steering pump, inspect the O-ring on the pressure hose for damage and replace if necessary.

(7) Install the power steering fluid pressure line onto the output fitting of the power steering pump (Fig. 6). Tighten the pressure line to pump fitting tube nut to a torque of 31 N·m (275 in. lbs.).

(8) Install the power steering fluid low pressure return hose on the power steering pump low pressure fitting (Fig. 6). **Be sure hose clamps are properly reinstalled.**

(9) Install the power steering fluid supply hose on the power steering pump fluid fitting. **Be sure hose is clear of accessory drive belts all hose clamps are properly reinstalled.**

CAUTION: Heat sleeve must cover entire rubber portion of return hose to ensure desired thermal protection from exhaust.

(10) Properly position the protective heat sleeve over the power steering return hose. Securely tie strap the heat sleeve to the power steering hose to keep in it's proper position.

(11) Install the exhaust system (Fig. 4). Install all exhaust system isolators/hangers on the exhaust system brackets, then the four bolts and flag nuts (Fig. 3).

(12) Connect the oxygen sensor wiring harness to the vehicle wiring harness.

(13) Lower vehicle.

(14) Connect the negative battery cable on the negative battery post.

(15) Perform the POWER STEERING PUMP INITIAL OPERATION procedure to properly fill and bleed the power steering system. (Refer to 19 - STEERING/PUMP - STANDARD PROCEDURE)

(16) Inspect for leaks.

INSTALLATION - PUMP (3.3L/3.8L ENGINE)

(1) Install power steering pump back in vehicle using the reverse order of its removal through the engine compartment of the vehicle.

(2) Install the power steering pump on its mounting bracket.

(3) Install the 3 front power steering pump mounting bolts (Fig. 11). Tighten the 3 front power steering pump mounting bolts to a torque of 54 N·m (40 ft. lbs.).

NOTE: Before installing power steering pressure hose on power steering pump, inspect the O-ring on the power steering pressure hose for damage and replace if required.

(4) Install the power steering fluid pressure line into the pressure output fitting of the power steering pump (Fig. 10). **Do not fully tighten tube nut at this time.**

(5) Install the power steering fluid supply hose on the power steering pump supply fitting (Fig. 10). **Be sure hose clamp is properly installed.**

(6) Raise the vehicle.

(7) Install the routing clip on the engine for the pressure hose (Fig. 9) and tighten fastener.

(8) Install the serpentine drive belt (Refer to 7 - COOLING/ACCESSORY DRIVE/DRIVE BELTS - INSTALLATION).

(9) Install the drive belt splash shield.

(10) Lower the vehicle.

(11) Tighten the pressure line to pump pressure fitting tube nut to a torque of 31 N·m (275 in. lbs.).

(12) Install the wiper module (unit)(Refer to 8 - ELECTRICAL/WIPERS/WASHERS/WIPER MODULE - INSTALLATION).

(13) Connect the negative battery cable on the negative battery post.

(14) Fill and bleed the power steering system using the Power Steering Pump Initial Operation Procedure (Refer to 19 - STEERING/PUMP - STANDARD PROCEDURE).

(15) Inspect for leaks.

INSTALLATION - PUMP (DIESEL)

(1) Install the power steering pump on its cast mounting bracket.

(2) Install the three front power steering pump mounting bolts. Tighten the mounting bolts to a torque of 54 N·m (40 ft. lbs.).

(3) Install the rear mounting bolt fastening the stamped bracket to the cast bracket (Fig. 13). Tighten the mounting bolt to a torque of 54 N·m (40 ft. lbs.).

PUMP (Continued)

NOTE: Before installing power steering pressure hose on power steering pump, inspect the O-ring on the power steering pressure hose for damage and replace if required.

(4) Install the power steering fluid pressure hose fitting into the pressure port of the power steering pump (Fig. 12). Tighten the pressure line to pump fitting tube nut to a torque of 31 N·m (275 in. lbs.).

(5) Install the power steering fluid supply hose on the power steering pump supply fitting (Fig. 12). **Be sure hose clamp is properly reinstalled.**

(6) Install the accessary drive belt (Refer to 7 - COOLING/ACCESSORY DRIVE/DRIVE BELTS - INSTALLATION).

(7) Install the splash shields below the engine compartment.

(8) Lower the vehicle.

(9) Connect the negative (-) battery cable on the negative battery post.

(10) Fill and bleed the power steering system using the Power Steering Pump Initial Operation Procedure (Refer to 19 - STEERING/PUMP - STANDARD PROCEDURE).

(11) Inspect for leaks.

SPECIAL TOOLS

POWER STEERING PUMP

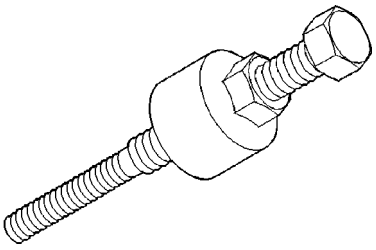

Installer C-4063B

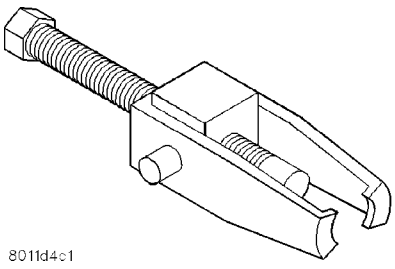

Puller C-4333

FLUID

STANDARD PROCEDURE - POWER STEERING FLUID LEVEL CHECKING

WARNING: FLUID LEVEL SHOULD BE CHECKED WITH THE ENGINE OFF TO PREVENT INJURY FROM MOVING PARTS AND TO ENSURE ACCURATE FLUID LEVEL READING.

The fluid level can be read on the exterior of the power steering fluid reservoir. The fluid level should be within the “FILL RANGE” when the fluid is at normal ambient temperature, approximately 21°C to 27°C (70°F to 80°F) (Fig. 17).

Before removing the power steering filler cap, wipe the reservoir filler cap free of dirt and debris. Do not overfill the power steering system. **Use only Mopar® ATF+4 Automatic Transmission Fluid (MS-9602) in the power steering system.** For additional information on Automatic Transmission Fluid, (Refer to LUBRICATION & MAINTENANCE/ FLUID TYPES - DESCRIPTION).

CAUTION: Use only Mopar® ATF+4 Automatic Transmission Fluid (MS-9602). Use of other Mopar® power steering fluids (MS5931 and MS9933) should be avoided to ensure peak performance of the power steering system under all operating conditions.

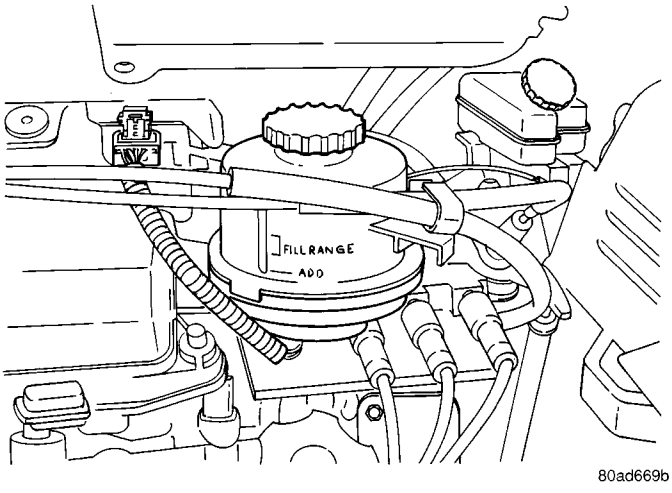

Fig. 17 Power Steering Fluid Reservoir

FLUID COOLER

DESCRIPTION

Trailer Tow equipped vehicles are supplied with a cooler for the power steering system fluid. The power steering fluid cooler is located on the front suspension cradle crossmember reinforcement (Fig. 18).

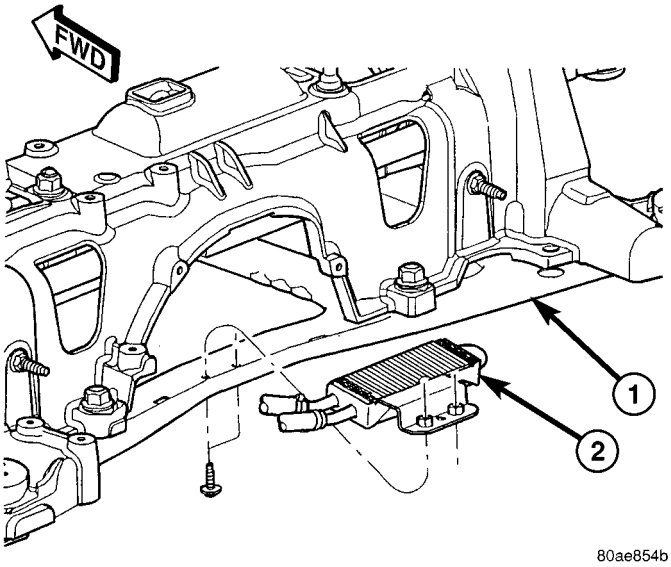

Fig. 18 Power Steering Cooler

1 - CRADLE CROSSMEMBER REINFORCEMENT
2 - POWER STEERING COOLER

OPERATION

The purpose of the power steering fluid cooler is to keep the temperature of the power steering system fluid from rising to a level that would affect the performance of the power steering system.

The cooler used on this vehicle is referred to as a fluid-to-air type cooler. This means that the air flow across the tubes (and fines surrounding them) of the cooler is used to extract the heat from the cooler which it has absorbed from the power steering fluid flowing through it. The cooler is placed in the power steering fluid return line, between the steering gear and the power steering fluid reservoir.

REMOVAL

(1) Using a siphon pump, remove as much fluid as possible from the power steering fluid reservoir.

(2) Raise vehicle. (Refer to LUBRICATION & MAINTENANCE/HOISTING - STANDARD PROCEDURE)

(3) Remove the hose clamps at the cooler and remove the hoses from the cooler inlet and outlet tubes.

(4) Remove the 2 bolts attaching the power steering cooler cradle crossmember reinforcement (Fig. 19). Remove the cooler.

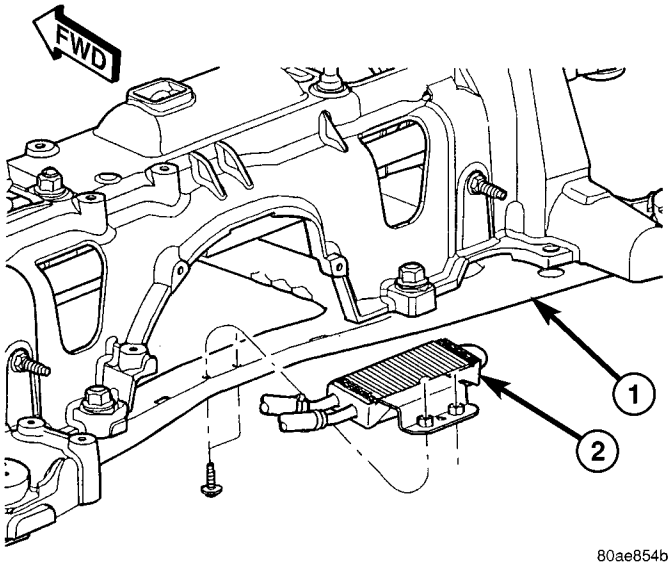

Fig. 19 Power Steering Cooler

1 - CRADLE CROSSMEMBER REINFORCEMENT
2 - POWER STEERING COOLER

INSTALLATION

(1) Install the power steering fluid cooler on the cradle crossmember reinforcement (Fig. 19). Install the mounting bolts and tighten to 11 N·m (100 in. lbs.).

(2) Install power steering fluid hoses on the cooler. **Be sure hose clamps are installed on hose past the upset bead on the power steering cooler tubes.**

(3) Lower the vehicle to a point where front tires are just off the ground.

(4) Perform Power Steering Pump Initial Operation procedure. (Refer to 19 - STEERING/PUMP - STANDARD PROCEDURE)

HOSE - POWER STEERING PRESSURE

REMOVAL

REMOVAL - 2.4L ENGINE

NOTE: Before proceeding, review all WARNINGS and CAUTIONS. (Refer to 19 - STEERING/PUMP - WARNING)(Refer to 19 - STEERING/PUMP - CAUTION)

(1) Remove cap from power steering fluid reservoir.

(2) Using a siphon pump, remove as much power steering fluid as possible from power steering fluid reservoir.

(3) Raise vehicle. (Refer to LUBRICATION & MAINTENANCE/HOISTING - STANDARD PROCEDURE)

(4) Remove front emissions vapor canister. (Refer to 25 - EMISSIONS CONTROL/EVAPORATIVE EMISSIONS/VAPOR CANISTER - REMOVAL)

(5) Place an oil drain pan under vehicle to catch power steering fluid.

(6) Back out pressure hose tube nut at power steering pump pressure fitting and remove hose from pump (Fig. 20).

(7) Remove bolt attaching right routing clamp to front suspension cradle crossmember (Fig. 20). Remove pressure hose from clamp.

(8) Back out pressure hose tube nut at power steering gear and remove hose from gear (Fig. 20).

(9) Remove power steering fluid pressure hose from vehicle.

REMOVAL - 3.3L/3.8L ENGINE

NOTE: Before proceeding, review all WARNINGS and CAUTIONS. (Refer to 19 - STEERING/PUMP - WARNING)(Refer to 19 - STEERING/PUMP - CAUTION)

(1) Remove cap from power steering fluid reservoir.

(2) Using a siphon pump, remove as much power steering fluid as possible from power steering fluid reservoir.

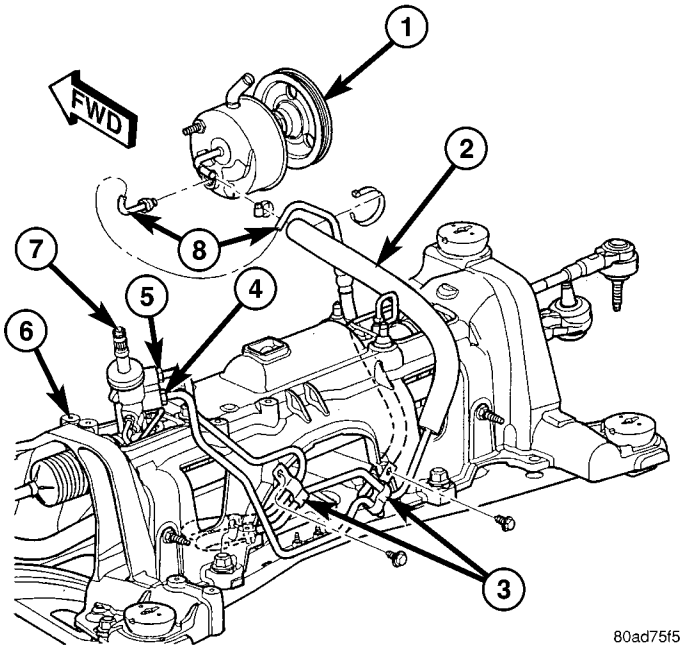

Fig. 20 PRESSURE AND RETURN HOSES - 2.4L

1 - POWER STEERING PUMP
2 - RETURN HOSE (HEAT SLEEVE COVERED)
3 - ROUTING CLAMPS
4 - PRESSURE HOSE TUBE NUT
5 - RETURN HOSE TUBE NUT
6 - CRADLE CROSSMEMBER
7 - POWER STEERING GEAR
8 - PRESSURE HOSE

(3) Raise vehicle. (Refer to LUBRICATION & MAINTENANCE/HOISTING - STANDARD PROCEDURE)

(4) Remove front emissions vapor canister. (Refer to 25 - EMISSIONS CONTROL/EVAPORATIVE EMISSIONS/VAPOR CANISTER - REMOVAL)

(5) Remove two bolts securing pressure hose routing clamps to suspension cradle crossmember and steel reinforcement (Fig. 21).

(6) Place an oil drain pan under vehicle to catch draining power steering fluid.

(7) Disconnect pressure hose at power steering gear (Fig. 21).

HOSE - POWER STEERING PRESSURE (Continued)

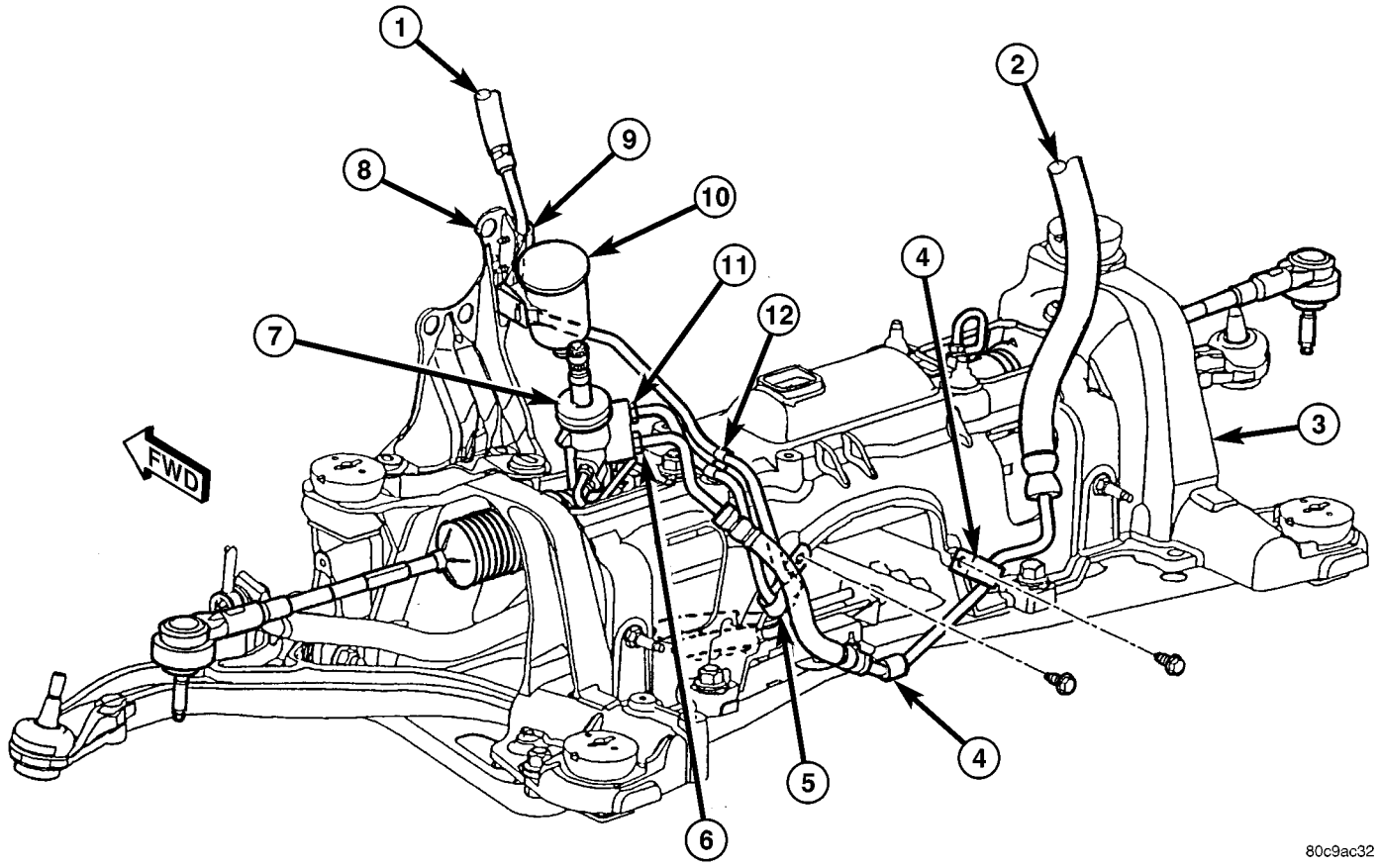

Fig. 21 HOSES TO POWER STEERING GEAR - 3.3L/3.8L ENGINE

1 - RETURN HOSE (TO RESERVOIR)
2 - PRESSURE HOSE (FROM PUMP)
3 - CRADLE CROSSMEMBER
4 - PRESSURE HOSE ROUTING CLAMP
5 - RETURN HOSE ROUTING CLAMP
6 - PRESSURE HOSE TUBE NUT
7 - POWER STEERING GEAR
8 - ABS BRACKET
9 - ROUTING CLIP
10 - LEAK DETECTION PUMP FILTER
11 - RETURN HOSE TUBE NUT
12 - ROUTING CLIP

(8) Remove pressure hose routing bracket bolt at engine (Fig. 22). Bolt can be accessed through hole in cradle crossmember (Fig. 23).

(9) Disconnect pressure hose tube nut at power steering pump (Fig. 22).

(10) Remove power steering fluid pressure hose from vehicle.

INSTALLATION

INSTALLATION - 2.4L ENGINE

(1) Remove any used O-rings from ends of power steering hose.

(2) Using a lint free towel, wipe clean hose ends, power steering pump pressure outlet fitting and steering gear port.

(3) Install new O-rings on ends of power steering fluid pressure hose. Lubricate O-rings using clean power steering fluid.

CAUTION: Use care not to bend tube ends of power steering hoses when installing. Leaks and restrictions may occur.

CAUTION: Power steering fluid hoses must remain away from exhaust system and must not come in contact with any unfriendly surfaces on vehicle.

(4) Route hose up through cradle crossmember toward power steering pump avoiding tight bends or kinking.

(5) Install power steering pressure hose end into pump pressure outlet fitting (Fig. 20). Thread tube nut into outlet fitting, but do not tighten at this time.

(6) Route hose behind cradle crossmember and start hose end into gear port. Do not tighten hose tube nut at this time.

(7) Install hose into right routing clamp (Fig. 20), then install mounting bolt into cradle crossmember. Tighten bolt to 23 N·m (200 in. lbs.) torque.

HOSE - POWER STEERING PRESSURE (Continued)

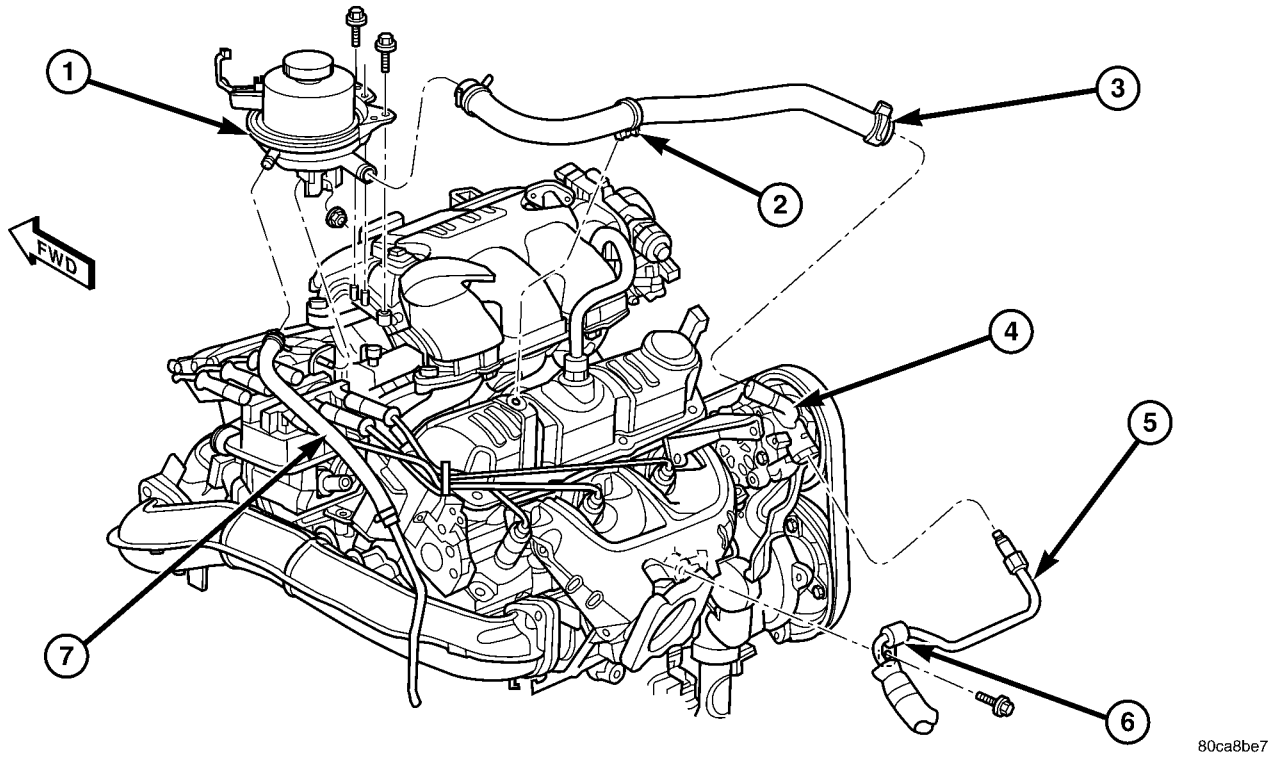

Fig. 22 RESERVOIR AND HOSES - 3.3L/3.8L

1 - RESERVOIR
2 - ROUTING CLIP (2001 ONLY)
3 - SUPPLY HOSE
4 - POWER STEERING PUMP
5 - PRESSURE HOSE (TO GEAR)
6 - ROUTING BRACKET
7 - RETURN HOSE (FROM GEAR)

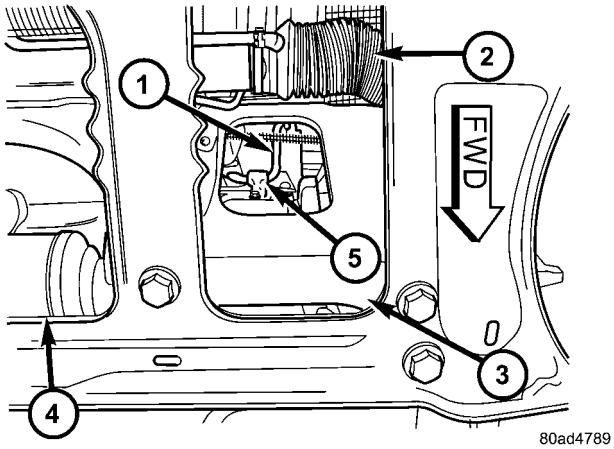

Fig. 23 PRESSURE HOSE ROUTING CLAMP

1 - PRESSURE HOSE TUBE
2 - STEERING GEAR
3 - CRADLE CROSSMEMBER
4 - DRIVESHAFT
5 - ROUTING CLAMP BRACKET

CAUTION: When tightening and torquing the pressure hose at the power steering pump, the pressure hose is to be rotated against the fluid return hose fitting on the pump.

(8) Tighten pressure hose tube nuts at pump and gear to 31 N·m (275 in. lbs.) torque.

(9) Install front emissions vapor canister. (Refer to 25 - EMISSIONS CONTROL/EVAPORATIVE EMISSIONS/VAPOR CANISTER - INSTALLATION)

(10) Lower vehicle.

(11) Fill and bleed the power steering system using the Power Steering Pump Initial Operation Procedure. (Refer to 19 - STEERING/PUMP - STANDARD PROCEDURE)

(12) Inspect system for leaks.

INSTALLATION - 3.3L/3.8L ENGINE

(1) Remove any used O-rings from ends of power steering hose.

(2) Using a lint free towel, wipe clean hose ends, power steering pump pressure outlet fitting and steering gear port.

HOSE - POWER STEERING PRESSURE (Continued)

(3) Install new O-rings on ends of power steering fluid pressure hose. Lubricate O-rings using clean power steering fluid.

CAUTION: Use care not to bend tube ends of the power steering hoses when installing. Leaks and restrictions may occur.

CAUTION: Power steering fluid hoses must remain away from the exhaust system and must not come in contact with any unfriendly surfaces on the vehicle.

(4) Route hose up behind engine toward pump avoiding tight bends or kinking.

(5) Install power steering pressure hose end into pump pressure outlet fitting (Fig. 22). Thread tube nut into outlet fitting, but do not tighten at this time.

(6) Attach pressure hose routing bracket to engine (Fig. 22). Tighten bolt to 23 N·m (200 in. lbs.) torque.

(7) Tighten hose tube nut at pump outlet fitting to 31 N·m (275 in. lbs.) torque.

(8) Route hose behind cradle crossmember and start hose end into gear port. Do not tighten hose tube nut at this time.

(9) Attach hose to suspension cradle crossmember and steel reinforcement using two routing clamps and bolts (Fig. 21). Tighten clamp bolt at steel reinforcement to 11 N·m (100 in. lbs.) torque. Tighten clamp bolt at cradle crossmember to 23 N·m (200 in. lbs.) torque.

(10) Tighten hose tube nut at power steering gear port to 31 N·m (275 in. lbs.) torque.

(11) Install front emissions vapor canister. (Refer to 25 - EMISSIONS CONTROL/EVAPORATIVE EMISSIONS/VAPOR CANISTER - INSTALLATION)

(12) Lower vehicle.

(13) Fill and bleed the power steering system using the Power Steering Pump Initial Operation Procedure. (Refer to 19 - STEERING/PUMP - STANDARD PROCEDURE)

(14) Inspect system for leaks.

HOSE - POWER STEERING RETURN

REMOVAL

REMOVAL - 2.4L ENGINE

NOTE: Before proceeding, review all WARNINGS and CAUTIONS. (Refer to 19 - STEERING/PUMP - WARNING)(Refer to 19 - STEERING/PUMP - CAUTION)

(1) Remove cap from power steering fluid reservoir.

(2) Using a siphon pump, remove as much power steering fluid as possible from power steering fluid reservoir.

(3) Raise vehicle. (Refer to LUBRICATION & MAINTENANCE/HOISTING - STANDARD PROCEDURE)

(4) Remove front emissions vapor canister. (Refer to 25 - EMISSIONS CONTROL/EVAPORATIVE EMISSIONS/VAPOR CANISTER - REMOVAL)

(5) Place an oil drain pan under vehicle to catch power steering fluid.

(6) Cut tie-strap securing insulating heat sleeve to power steering fluid return hose near power steering pump. Pull back heat sleeve to expose hose clamp.

(7) Remove clamp, then return hose from power steering pump (Fig. 20).

(8) Remove 2 bolts attaching power steering cooler to cradle crossmember reinforcement (Fig. 24).

(9) Remove bolts attaching routing clamps to front suspension cradle crossmember (Fig. 20). Remove return hose from clamps.

(10) Back out return hose tube nut at power steering gear and remove hose (Fig. 20).

REMOVAL - 3.3L/3.8L ENGINE

NOTE: Before proceeding, review all WARNINGS and CAUTIONS. (Refer to 19 - STEERING/PUMP - WARNING)(Refer to 19 - STEERING/PUMP - CAUTION)

(1) Remove cap from power steering fluid reservoir.

(2) Using a siphon pump, remove as much power steering fluid as possible from power steering fluid reservoir.

(3) Place an oil drain pan under vehicle to catch any draining power steering fluid.

(4) Remove clamp attaching return hose to power steering fluid reservoir. Disconnect hose from reservoir (Fig. 22).

(5) Follow return hose downward and open retainer at ABS bracket (Fig. 21). Remove hose tube from retainer.

(6) Raise vehicle. (Refer to LUBRICATION & MAINTENANCE/HOISTING - STANDARD PROCEDURE)

(7) Remove front emissions vapor canister. (Refer to 25 - EMISSIONS CONTROL/EVAPORATIVE EMISSIONS/VAPOR CANISTER - REMOVAL)

(8) Remove bolt securing return hose routing clamp to suspension cradle crossmember (Fig. 21).

HOSE - POWER STEERING RETURN (Continued)

(9) Remove 2 bolts attaching power steering cooler to cradle crossmember reinforcement (Fig. 24).

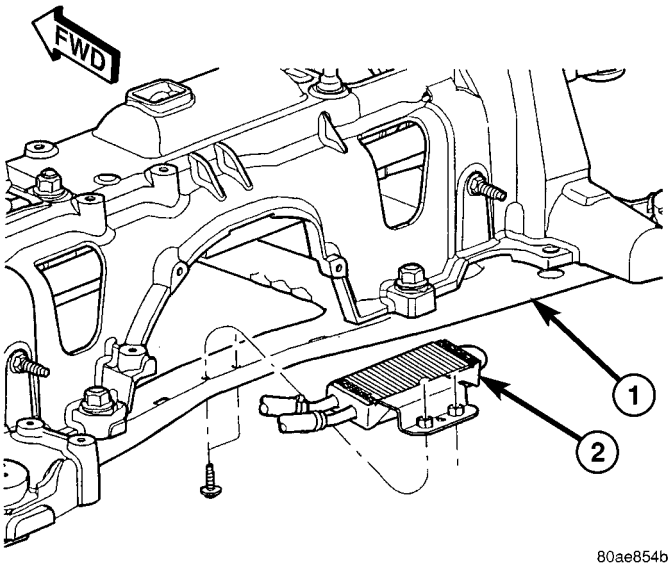

Fig. 24 POWER STEERING COOLER

1 - CRADLE CROSSMEMBER REINFORCEMENT
2 - POWER STEERING COOLER

(10) Disconnect return hose at power steering gear (Fig. 21).

(11) Remove power steering fluid return hose with cooler from vehicle.

INSTALLATION

INSTALLATION - 2.4L ENGINE

(1) Remove any used O-rings from ends of power steering hose.

(2) Using a lint free towel, wipe clean hose ends, power steering pump fitting and steering gear port.

(3) Install new O-ring on power steering gear end of return hose. Lubricate O-ring using clean power steering fluid.

CAUTION: Use care not to bend tube ends of the power steering hoses when installing. Leaks and restrictions may occur.

CAUTION: If a new return hose is being installed and it does not have an insulating heat sleeve installed, the heat shield from the original hose must be transferred before hose installation.

(4) Route hose along rear of cradle crossmember and start gear end of hose into gear port. Do not tighten hose tube nut at this time.

(5) Attach hose to suspension cradle crossmember using two routing clamps and bolts (Fig. 20). Tighten clamp bolts to 23 N·m (200 in. lbs.) torque.

(6) Tighten return hose tube nut at power steering gear port to 31 N·m (275 in. lbs.) torque.

(7) Install the power steering fluid cooler on the cradle crossmember reinforcement (Fig. 24). Install the mounting bolts and tighten to 11 N·m (100 in. lbs.).

CAUTION: Power steering fluid hoses must remain away from the exhaust system and must not come in contact with any unfriendly surfaces on the vehicle.

(8) Route pump end of hose over cradle crossmember toward pump avoiding tight bends or kinking.

(9) Install return hose onto power steering pump return fitting and secure with hose clamp (Fig. 20). Tighten the screw-type clamp to a torque of 2 N·m (18 in. lbs.).

CAUTION: To prevent overheating of power steering fluid return hose, protective heat shield sleeve must cover entire rubber hose.

(10) Slide insulating heat shield up over the clamp on the return hose and tie-strap it in place.

(11) Install front emissions vapor canister. (Refer to 25 - EMISSIONS CONTROL/EVAPORATIVE EMISSIONS/VAPOR CANISTER - INSTALLATION)

(12) Lower vehicle.

(13) Fill and bleed the power steering system using the Power Steering Pump Initial Operation Procedure. (Refer to 19 - STEERING/PUMP - STANDARD PROCEDURE)

(14) Inspect system for leaks.

INSTALLATION - 3.3L/3.8L ENGINE

(1) Remove any used O-rings from ends of power steering hose.

(2) Using a lint free towel, wipe clean hose ends and power steering gear hose port.

(3) Install a new O-ring on gear port end of power steering fluid hose. Lubricate O-ring using clean power steering fluid.

CAUTION: Use care not to bend tube ends of the power steering hoses when installing. Leaks and restrictions may occur.

CAUTION: Power steering fluid hoses must remain away from the exhaust system and must not come in contact with any unfriendly surfaces on the vehicle.

(4) Route hose (with cooler attached) up toward reservoir avoiding tight bends or kinking.

(5) Start steering gear end of hose into gear port. Do not tighten hose tube nut at this time.

(6) Attach return hose tubes to suspension cradle crossmember using routing clamp and bolt (Fig. 21). Tighten clamp bolt to 23 N·m (200 in. lbs.) torque.

(7) Install the power steering fluid cooler on the cradle crossmember reinforcement (Fig. 24). Install the mounting bolts and tighten to 11 N·m (100 in. lbs.). When installing mounting bolts, include pressure hose routing clamp.

(8) Tighten hose tube nut at power steering gear port to 31 N·m (275 in. lbs.) torque.

(9) Install front emissions vapor canister. (Refer to 25 - EMISSIONS CONTROL/EVAPORATIVE EMISSIONS/VAPOR CANISTER - INSTALLATION)

(10) Lower vehicle.

(11) Install return hose tube into retainer on ABS bracket (Fig. 21). Close the bracket.

(12) Install return hose onto reservoir (Fig. 22). Slide the hose clamp into position on fluid reservoir and attach it. **Be sure hose clamp in installed past bead on fluid reservoir fitting.**

(13) Fill and bleed power steering system using the Power Steering Pump Initial Operation Procedure. (Refer to 19 - STEERING/PUMP - STANDARD PROCEDURE)

(14) Inspect system for leaks.

HOSE - POWER STEERING SUPPLY

REMOVAL

REMOVAL - 2.4L ENGINE

(1) Remove filler cap from power steering fluid reservoir.

(2) Using a siphon pump, remove as much power steering fluid as possible from the power steering fluid reservoir.

(3) Raise vehicle. (Refer to LUBRICATION & MAINTENANCE/HOISTING - STANDARD PROCEDURE)

(4) Remove hose clamp securing supply hose to power steering pump, then remove supply hose from pump fitting.

(5) Lower vehicle.

(6) Remove hose clamp attaching power steering fluid supply hose to power steering fluid reservoir, then remove supply hose.

(7) Remove the power steering fluid supply hose from the vehicle.

REMOVAL - 3.3L/3.8L ENGINE

NOTE: Before proceeding, review all WARNINGS and CAUTIONS. (Refer to 19 - STEERING/PUMP - WARNING)(Refer to 19 - STEERING/PUMP - CAUTION)

(1) Remove cap from power steering fluid reservoir.

(2) Using a siphon pump, remove as much power steering fluid as possible from power steering fluid reservoir.

(3) Place an oil drain pan under vehicle to catch any draining power steering fluid.

(4) Remove clamp attaching supply hose to power steering fluid reservoir. Disconnect hose from reservoir (Fig. 22).

(5) Pull upward on hose routing clip releasing it from bracket on cylinder head cover (Fig. 22).

NOTE: It may be necessary to remove air cleaner housing to gain greater access to supply hose at power steering pump. (Refer to 9 - ENGINE/AIR INTAKE SYSTEM/AIR CLEANER HOUSING - REMOVAL)

(6) Remove clamp attaching supply hose to power steering pump. Disconnect hose from pump and remove from vehicle (Fig. 22).

INSTALLATION

INSTALLATION - 2.4L ENGINE

(1) Install and correctly route power steering fluid supply hose from remote fluid reservoir to power steering pump.

(2) Install fluid supply hose onto power steering fluid reservoir. Install hose clamp. **Be sure hose clamp is installed past bead on fluid reservoir fitting.**

(3) Raise vehicle. (Refer to LUBRICATION & MAINTENANCE/HOISTING - STANDARD PROCEDURE)

(4) Install power steering fluid supply hose on power steering pump supply fitting. Install hose clamp. **Be sure hose clamp is installed past bead on pump fitting.**

(5) Lower vehicle.

(6) Fill and bleed power steering system using Power Steering Pump Initial Operation Procedure. (Refer to 19 - STEERING/PUMP - STANDARD PROCEDURE)

(7) Inspect system for leaks.

HOSE - POWER STEERING SUPPLY (Continued)

INSTALLATION - 3.3L/3.8L ENGINE

(1) Install supply hose onto supply fitting on power steering pump (Fig. 22). Slide the hose clamp into position on fluid reservoir and attach it. **Be sure hose clamp in installed past bead on fluid reservoir fitting.**

(2) Align routing clip located toward center of supply hose with hole in bracket on cylinder head cover and push into place (Fig. 22).

(3) Install supply hose onto reservoir (Fig. 22). Slide the hose clamp into position on fluid reservoir and attach it. **Be sure hose clamp in installed past bead on fluid reservoir fitting.**

(4) Fill and bleed power steering system using Power Steering Pump Initial Operation Procedure. (Refer to 19 - STEERING/PUMP - STANDARD PROCEDURE)

(5) Inspect system for leaks.

RESERVOIR - POWER STEERING FLUID

DESCRIPTION

DESCRIPTION - 2.4L/3.3L/3.8L ENGINE

All vehicles use a remote mounted power steering fluid reservoir. The power steering fluid reservoir is mounted to the engine near the battery (Fig. 25).

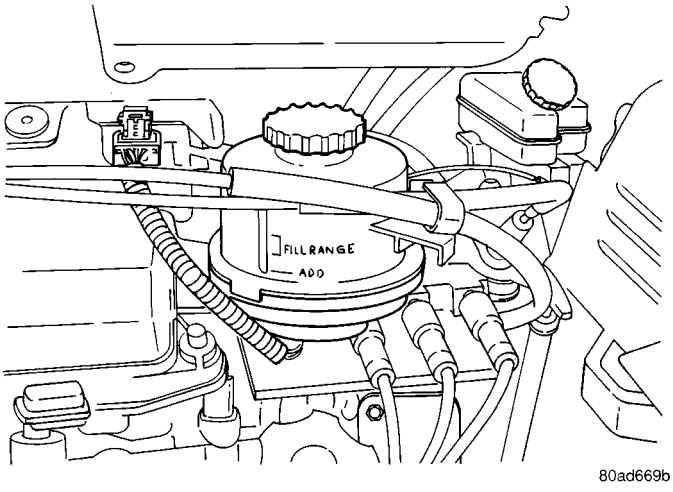

Fig. 25 Power Steering Fluid Reservoir (Typical)

DESCRIPTION - DIESEL

All vehicles use a remote mounted power steering fluid reservoir. The power steering fluid reservoir is mounted to a bracket on the engine manifold (Fig. 26).

OPERATION

The power steering fluid reservoir stores and supplies power steering fluid for the power steering system.

REMOVAL

REMOVAL - 2.4L ENGINE

(1) Remove cap from power steering fluid reservoir.

(2) Using a siphon pump, remove as much power steering fluid as possible from power steering fluid reservoir.

(3) Open retainer on side of reservoir and remove cables from retainer.

(4) Remove clamp attaching supply hose to power steering fluid reservoir. Disconnect hose from reservoir.

(5) Remove bolts and nut securing reservoir in place.

(6) Remove reservoir.

REMOVAL - 3.3L/3.8L ENGINE

(1) Remove cap from power steering fluid reservoir.

(2) Using a siphon pump, remove as much power steering fluid as possible from power steering fluid reservoir.

(3) Open retainer on side of reservoir and remove cables from retainer.

(4) Remove clamp attaching supply hose to power steering fluid reservoir. Disconnect hose from reservoir (Fig. 22).

(5) Remove clamp attaching return hose to power steering fluid reservoir. Disconnect hose from reservoir (Fig. 22).

(6) Remove bolts and nut securing reservoir in place (Fig. 22).

(7) Remove reservoir.

REMOVAL - DIESEL

(1) Open hood.

(2) Remove engine cover.

(3) Remove the filler cap from remote power steering fluid reservoir.

(4) Siphon as much fluid as possible from the fluid reservoir.

(5) Remove the clamp attaching the return hose to the power steering fluid reservoir. Disconnect hose from reservoir (Fig. 26).

(6) Remove the clamp attaching the supply hose to the power steering fluid reservoir. Disconnect hose from reservoir (Fig. 26).

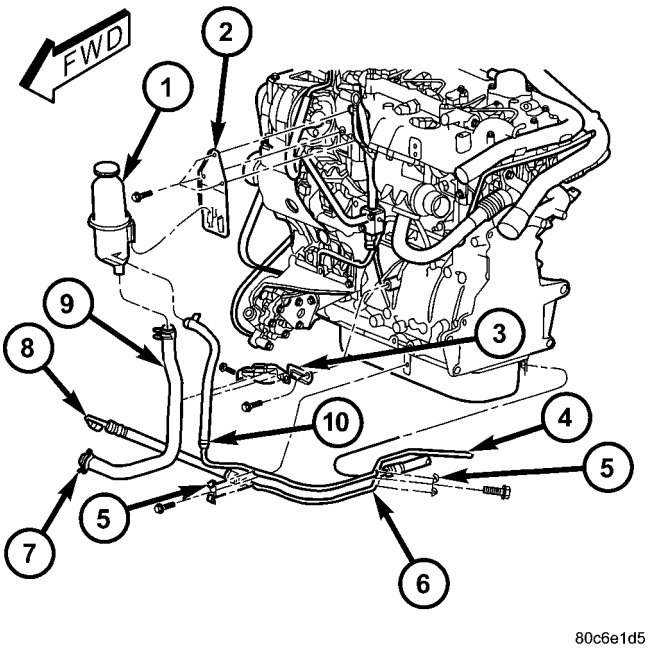

Fig. 26 Reservoir And Hoses - Diesel

1 - POWER STEERING FLUID RESERVOIR
2 - RESERVOIR BRACKET
3 - SUPPLY HOSE BRACKET
4 - RETURN HOSE FROM GEAR
5 - ROUTING CLIP
6 - PRESSURE HOSE TO GEAR
7 - SUPPLY HOSE (PUMP END)
8 - PRESSURE HOSE (PUMP END)
9 - SUPPLY HOSE
10 - RETURN HOSE

(7) Press the tang on the reservoir mounting bracket retaining the reservoir to the bracket, then pull upward on reservoir and remove it from the bracket.

INSTALLATION

INSTALLATION - 2.4L ENGINE

(1) Place reservoir into position on engine.

(2) Install reservoir mounting bolts and nut. Tighten fasteners to 12 N·m (105 in. lbs.) torque.

(3) Install supply hose onto reservoir. Slide the hose clamp into position on fluid reservoir and attach it. **Be sure hose clamp in installed past bead on fluid reservoir fitting.**

(4) Fill and bleed power steering system using Power Steering Pump Initial Operation Procedure. (Refer to 19 - STEERING/PUMP - STANDARD PROCEDURE)

(5) Inspect system for leaks.

INSTALLATION - 3.3L/3.8L ENGINE

(1) Place reservoir into place on engine (Fig. 22).

(2) Install reservoir mounting bolts and nut (Fig. 22). Tighten fasteners to 12 N·m (105 in. lbs.) torque.

(3) Install supply hose onto reservoir (Fig. 22). Slide the hose clamp into position on fluid reservoir and attach it. **Be sure hose clamp in installed past bead on fluid reservoir fitting.**

(4) Install return hose onto reservoir (Fig. 22). Slide the hose clamp into position on fluid reservoir and attach it. **Be sure hose clamp in installed past bead on fluid reservoir fitting.**

(5) Fill and bleed power steering system using Power Steering Pump Initial Operation Procedure. (Refer to 19 - STEERING/PUMP - STANDARD PROCEDURE)

(6) Inspect system for leaks.

INSTALLATION - DIESEL

(1) Align the guide on the rear of the reservoir with the mounting bracket and push reservoir downward until reservoir clicks into place in the bracket.

(2) Install the supply hose onto the reservoir (Fig. 26). Slide the hose clamp into position on the fluid reservoir and attach it. **Be sure hose clamp in installed past bead on fluid reservoir fitting.**

(3) Install the return hose onto the reservoir (Fig. 26). Slide the hose clamp into position on the fluid reservoir and attach it. **Be sure hose clamp in installed past bead on fluid reservoir fitting.**

(4) Fill the fluid reservoir to the proper level with the correct Mopar® power steering fluid or equivalent.

(5) Start the engine and let run for a few seconds, then turn the engine off.

(6) Add fluid as necessary.

(7) Install the filler cap.

(8) Install engine cover.

TRANSMISSION/TRANSAXLE

TABLE OF CONTENTS

	page
40TE AUTOMATIC TRANSAXLE	1
41TE AUTOMATIC TRANSAXLE	146

40TE AUTOMATIC TRANSAXLE

TABLE OF CONTENTS

	page
40TE AUTOMATIC TRANSAXLE	
DESCRIPTION	2
OPERATION	4
DIAGNOSIS AND TESTING	
DIAGNOSIS AND TESTING - 4XTE TRANSAXLE GENERAL DIAGNOSIS	5
DIAGNOSIS AND TESTING - ROAD TEST	5
DIAGNOSIS AND TESTING - HYDRAULIC PRESSURE TESTS	6
DIAGNOSIS AND TESTING - CLUTCH AIR PRESSURE TESTS	8
DIAGNOSIS AND TESTING - TORQUE CONVERTER HOUSING FLUID LEAKAGE	9
REMOVAL	9
DISASSEMBLY	12
ASSEMBLY	29
INSTALLATION	51
SCHEMATICS AND DIAGRAMS	
4XTE TRANSAXLE HYDRAULIC SCHEMATICS	54
SPECIFICATIONS - 41TE TRANSAXLE	66
SPECIAL TOOLS	68
ACCUMULATOR	
DESCRIPTION	73
OPERATION	73
DRIVING CLUTCHES	
DESCRIPTION	74
OPERATION	74
FINAL DRIVE	
DESCRIPTION	74
OPERATION	75
DISASSEMBLY	75
ASSEMBLY	78
ADJUSTMENTS	
DIFFERENTIAL BEARING PRELOAD MEASUREMENT AND ADJUSTMENT	79
FLUID	
STANDARD PROCEDURE	
FLUID LEVEL AND CONDITION CHECK	82
STANDARD PROCEDURE - FLUID AND FILTER SERVICE	82
GEAR SHIFT CABLE	
REMOVAL	84
HOLDING CLUTCHES	
DESCRIPTION	86
OPERATION	86
INPUT CLUTCH ASSEMBLY	
DISASSEMBLY	86
ASSEMBLY	95
OIL PUMP	
DESCRIPTION	110
OPERATION	110
DISASSEMBLY	110
ASSEMBLY	112
PLANETARY GEARTRAIN	
DESCRIPTION	112
OPERATION	112
SEAL - OIL PUMP	
REMOVAL	113
INSTALLATION	113
SHIFT INTERLOCK SOLENOID	
DESCRIPTION	113
OPERATION	114
DIAGNOSIS AND TESTING - BRAKE/ TRANSMISSION SHIFT INTERLOCK SOLENOID	115
REMOVAL	115
INSTALLATION	116
SOLENOID/PRESSURE SWITCH ASSY	
DESCRIPTION	117
OPERATION	118
REMOVAL	118
INSTALLATION	119

SPEED SENSOR - INPUT
DESCRIPTION 120
OPERATION 120
REMOVAL 121
INSTALLATION 121
SPEED SENSOR - OUTPUT
DESCRIPTION 122
OPERATION 122
REMOVAL 123
INSTALLATION 123
TORQUE CONVERTER
DESCRIPTION 124
OPERATION 128
REMOVAL 129
INSTALLATION 129
TRANSMISSION CONTROL RELAY
DESCRIPTION 130
OPERATION 130
TRANSMISSION RANGE SENSOR
DESCRIPTION 130
OPERATION 131
REMOVAL 131
INSTALLATION 131
VALVE BODY
DESCRIPTION 132
OPERATION 132
REMOVAL 133
DISASSEMBLY 135
ASSEMBLY 139
INSTALLATION 144

40TE AUTOMATIC TRANSAXLE

DESCRIPTION

The 40TE (Fig. 1) is a four-speed transaxle that is a conventional hydraulic/mechanical assembly with an integral differential, and is controlled with adaptive electronic controls and monitors. The hydraulic system of the transaxle consists of the transaxle fluid, fluid passages, hydraulic valves, and various line pressure control components. An input clutch assembly which houses the underdrive, overdrive, and reverse clutches is used. It also utilizes separate holding clutches: 2nd/4th gear and Low/Reverse. The primary mechanical components of the transaxle consist of the following:

- Three multiple disc input clutches
- Two multiple disc holding clutches
- Four hydraulic accumulators
- Two planetary gear sets
- Hydraulic oil pump
- Valve body
- Solenoid/Pressure switch assembly
- Integral differential assembly

Control of the transaxle is accomplished by fully adaptive electronics. Optimum shift scheduling is accomplished through continuous real-time sensor feedback information provided to the Powertrain Control Module (PCM) or Transmission Control Module (TCM).

The PCM/TCM is the heart of the electronic control system and relies on information from various direct and indirect inputs (sensors, switches, etc.) to determine driver demand and vehicle operating conditions. With this information, the PCM/TCM can calculate and perform timely and quality shifts through various output or control devices (solenoid pack, transmission control relay, etc.).

The PCM/TCM also performs certain self-diagnostic functions and provides comprehensive information (sensor data, DTC's, etc.) which is helpful in proper diagnosis and repair. This information can be viewed with the DRB scan tool.

40TE AUTOMATIC TRANSAXLE (Continued)

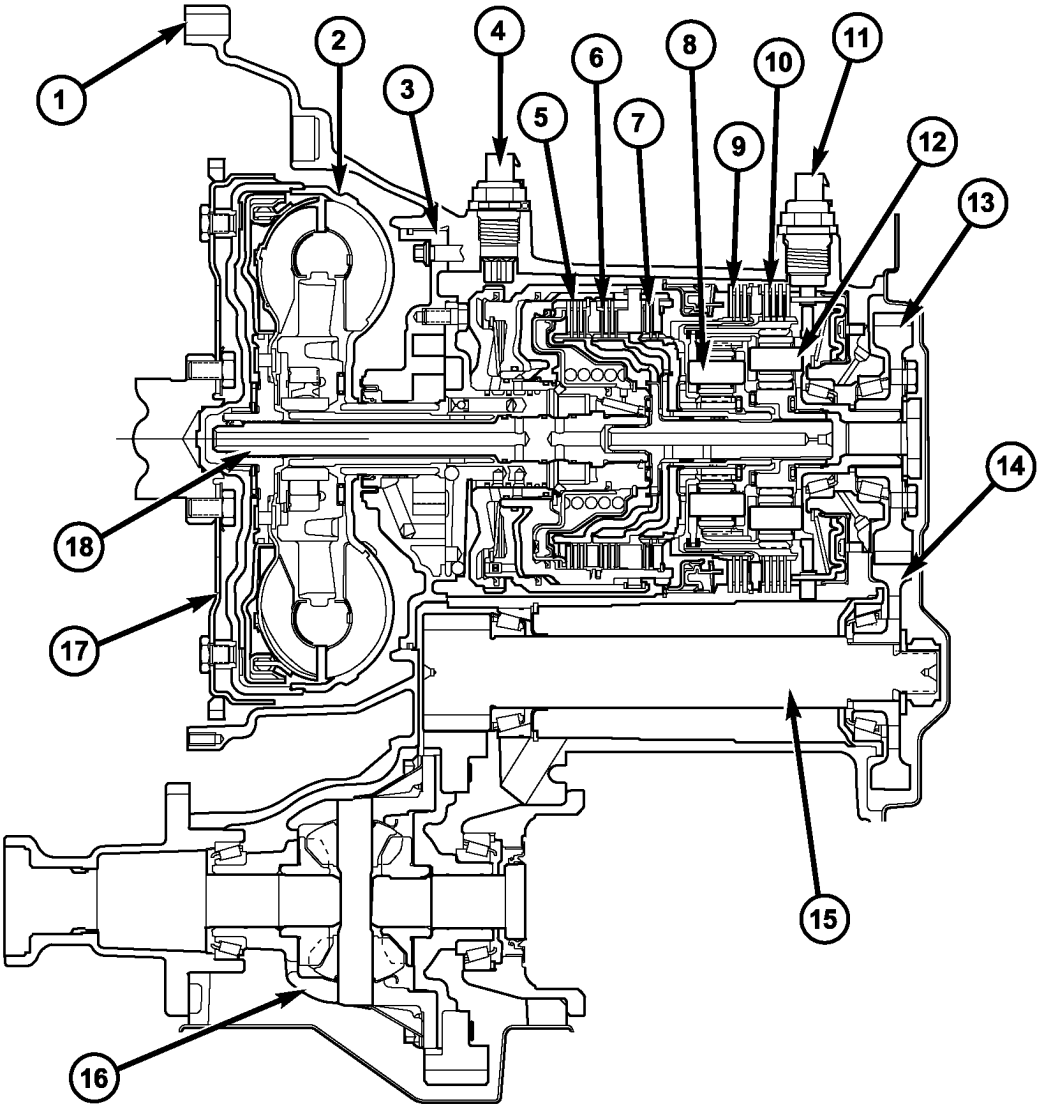

Fig. 1 40TE Automatic Transaxle

1 - TRANSAXLE CASE
2 - TORQUE CONVERTER
3 - OIL PUMP
4 - INPUT SPEED SENSOR
5 - UNDERDRIVE CLUTCH
6 - OVERDRIVE CLUTCH
7 - REVERSE CLUTCH
8 - FRONT PLANET CARRIER
9 - 2/4 CLUTCH
10 - L/R CLUTCH
11 - OUTPUT SPEED SENSOR
12 - REAR PLANET CARRIER/OUTPUT SHAFT
13 - OUTPUT SHAFT GEAR
14 - TRANSFER SHAFT GEAR
15 - TRANSFER SHAFT
16 - DIFFERENTIAL
17 - CONVERTER DRIVE PLATE
18 - INPUT SHAFT

TRANSAXLE IDENTIFICATION

The 40TE transaxle is identified by a barcode label that is fixed to the transaxle case as shown in (Fig. 2).

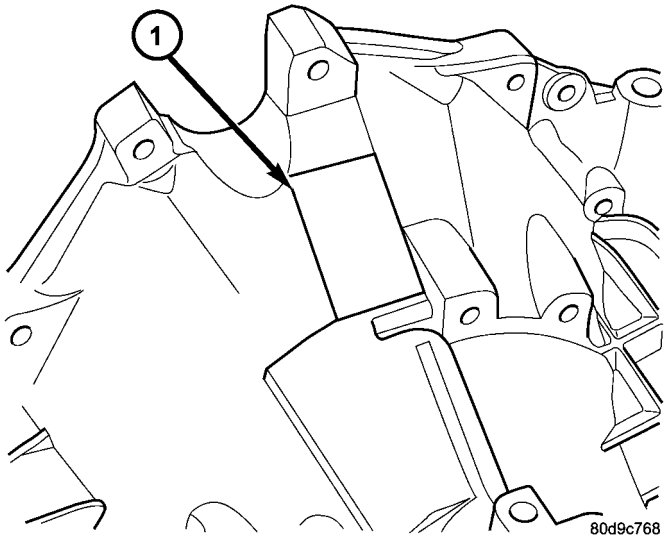

Fig. 2 Transaxle Identification Label

1 - IDENTIFICATION LABEL

The label contains a series of digits that can be translated into useful information such as transaxle part number, date of manufacture, manufacturing origin, plant shift number, build sequence number, etc. Refer to (Fig. 3) for identification label breakdown.

If the tag is not legible or missing, the “PK” number, which is stamped into the transaxle case behind the transfer gear cover, can be referred to for identification. This number differs slightly in that it contains the entire transaxle part number, rather than the last three digits.

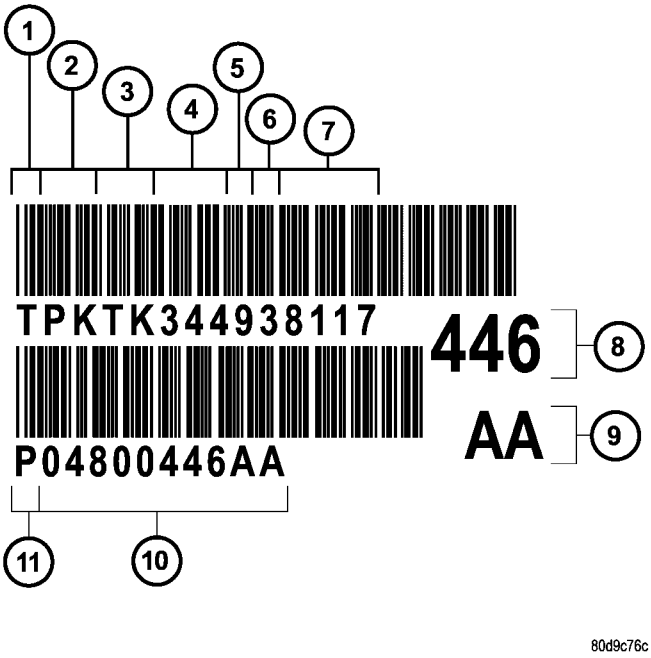

Fig. 3 Identification Label Breakdown

1 - T=TRACEABILITY
2 - SUPPLIER CODE (PK=KOKOMO)
3 - COMPONENT CODE (TK=KOKOMO TRANSMISSION)
4 - BUILD DAY (344=DEC. 9)
5 - BUILD YEAR (9=1999)
6 - LINE/SHIFT CODE (3=3RD SHIFT)
7 - BUILD SEQUENCE NUMBER
8 - LAST THREE OF P/N
9 - ALPHA
10 - TRANSAXLE PART NUMBER
11 - P=PART NUMBER

OPERATION

Transmission output is directed to an integral differential by a transfer gear system in the following input-to-output ratios:

First	2.84 : 1
Second	1.57 : 1
Third	1.00 : 1
Overdrive	0.69 : 1
Reverse	2.21 : 1

40TE AUTOMATIC TRANSAXLE (Continued)

DIAGNOSIS AND TESTING

DIAGNOSIS AND TESTING - 4XTE TRANSAXLE GENERAL DIAGNOSIS

NOTE: Before attempting any repair on a 4XTE four-speed automatic transaxle, check for diagnostic trouble codes (DTC's) using the DRB scan tool. Refer to the Transmission Diagnostic Procedures Manual.

Transaxle malfunctions may be caused by these general conditions:

- Poor engine performance
- Improper adjustments
- Hydraulic malfunctions
- Mechanical malfunctions
- Electronic malfunctions

Diagnosis of these problems should always begin by checking the easily accessible variables: fluid level and condition, gearshift cable adjustment. Then perform a road test to determine if the problem has been corrected or that more diagnosis is necessary. If the problem persists after the preliminary tests and corrections are completed, hydraulic pressure checks should be performed.

DIAGNOSIS AND TESTING - ROAD TEST

Prior to performing a road test, verify that the fluid level, fluid condition, and linkage adjustment have been approved.

During the road test, the transaxle should be operated in each position to check for slipping and any variation in shifting.

If the vehicle operates properly at highway speeds, but has poor acceleration, the converter stator overrunning clutch may be slipping. If acceleration is normal, but high throttle opening is needed to maintain highway speeds, the converter stator clutch may have seized. Both of these stator defects require replacement of the torque converter and thorough transaxle cleaning.

Slipping clutches can be isolated by comparing the "Elements in Use" chart with clutch operation encountered on a road test. This chart identifies which clutches are applied at each position of the selector lever.

A slipping clutch may also set a DTC and can be determined by operating the transaxle in all selector positions.

ELEMENTS IN USE AT EACH POSITION OF SELECTOR LEVER

Shift Lever Position	INPUT CLUTCHES			HOLDING CLUTCHES	
	Underdrive	Overdrive	Reverse	2/4	Low/Reverse
P - PARK					X
R - REVERSE			X		X
N - NEUTRAL					X
OD - OVERDRIVE					
First	X				X
Second	X			X	
Direct	X	X			
Overdrive		X		X	
D - DRIVE*					
First	X				X
Second	X			X	
Direct	X	X			
L - LOW*					
First	X				X
Second	X			X	
Direct	X	X			
* Vehicle upshift and downshift speeds are increased when in these selector positions.					

The process of elimination can be used to detect any unit which slips and to confirm proper operation of good units. Road test analysis can diagnose slipping units, but the cause of the malfunction cannot be determined. Practically any condition can be caused by leaking hydraulic circuits or sticking valves.

DIAGNOSIS AND TESTING - HYDRAULIC PRESSURE TESTS

Pressure testing is a very important step in the diagnostic procedure. These tests usually reveal the cause of most hydraulic transaxle problems.

Before performing pressure tests, be certain that fluid level and condition, and shift cable adjustments have been checked and approved. Fluid must be at operating temperature (150 to 200 degrees F.).

Install an engine tachometer, raise vehicle on hoist which allows front wheels to turn, and position tachometer so it can be read.

Attach 300 psi gauge (C-3293SP) to port(s) required for test(s) being conducted. Use adapter set L-4559 to adapt gauge(s) to transaxle.

Test port locations are shown in (Fig. 4).

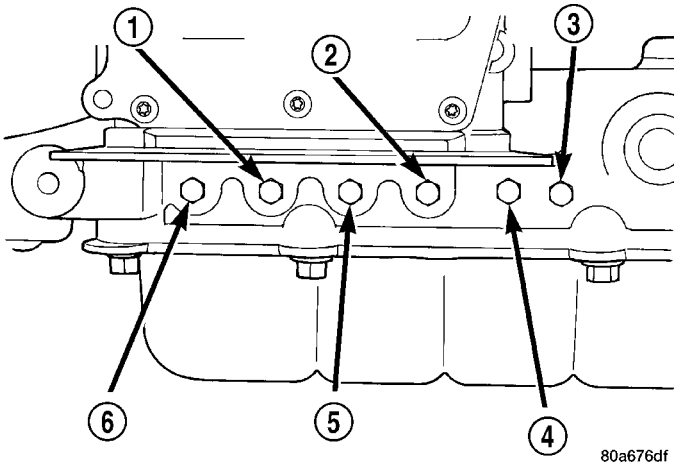

Fig. 4 Pressure Taps

1 - OVERDRIVE CLUTCH
2 - TORQUE CONVERTER OFF
3 - LOW/REVERSE CLUTCH
4 - 2/4 CLUTCH
5 - REVERSE CLUTCH
6 - UNDERDRIVE CLUTCH

TEST ONE-SELECTOR IN LOW (1st GEAR)

(1) Attach pressure gauge to the low/reverse clutch tap.

(2) Move selector lever to the (L) position.

(3) Allow vehicle wheels to turn and increase throttle opening to achieve an indicated vehicle speed to 20 mph.

(4) Low/reverse clutch pressure should read 115 to 145 psi.

(5) This test checks pump output, pressure regulation and condition of the low/reverse clutch hydraulic circuit and shift schedule.

TEST TWO-SELECTOR IN DRIVE (2nd GEAR)

NOTE: This test checks the underdrive clutch hydraulic circuit as well as the shift schedule.

(1) Attach gauge to the underdrive clutch tap.

(2) Move selector lever to the 3 position.

(3) Allow vehicle wheels to turn and increase throttle opening to achieve an indicated vehicle speed of 30 mph.

(4) In second gear the underdrive clutch pressure should read 110 to 145 psi.

TEST TWO A–SELECTOR IN OD (4th Gear)

NOTE: This test checks the underdrive clutch hydraulic circuit as well as the shift schedule.

(1) Attach gauge to the underdrive clutch tap.

(2) Move selector lever to the (OD) position.

(3) Allow wheels to rotate freely and increase throttle opening to achieve an indicated speed of 40 mph.

(4) Underdrive clutch pressure should read below 5 psi. If not, then either the solenoid assembly or PCM/TCM is at fault.

TEST THREE-OVERDRIVE CLUTCH CHECK (3rd and 2nd Gear)

(1) Attach gauge to the overdrive clutch tap.

(2) Move selector lever to the (OD) position.

(3) Allow vehicle wheels to turn and increase throttle opening to achieve an indicated vehicle speed of 20 mph. Vehicle should be in 3rd gear.

(4) Overdrive clutch pressure should read 74 to 95 psi.

(5) Move selector lever to the (3) position and increase indicated vehicle speed to 30 mph.

(6) The vehicle should be in second gear and overdrive clutch pressure should be less than 5 psi.

(7) This test checks the overdrive clutch hydraulic circuit as well as the shift schedule.

TEST FOUR-SELECTOR IN OVERDRIVE (4th Gear)

(1) Attach gauge to the 2/4 clutch tap.

(2) Move selector lever to the (OD) position.

(3) Allow vehicle front wheels to turn and increase throttle opening to achieve an indicated vehicle speed of 30 mph. Vehicle should be in 4th gear.

(4) The 2/4 clutch pressure should read 75 to 95 psi.

(5) This test checks the 2/4 clutch hydraulic circuit.

40TE AUTOMATIC TRANSAXLE (Continued)

TEST FIVE-SELECTOR IN OVERDRIVE (4th Gear-CC on)

(1) Attach gauge to the torque converter clutch off pressure tap.
(2) Move selector lever to the (OD) position.
(3) Allow vehicle wheels to turn and increase throttle opening to achieve an indicated vehicle speed of 50 mph. Vehicle should be in 4th gear, CC on.

CAUTION: Both wheels must turn at the same speed.

(4) Torque converter clutch off pressure should be less than 5 psi.
(5) This test checks the torque converter clutch hydraulic circuit.

TEST SIX-SELECTOR IN REVERSE

(1) Attach gauges to the reverse and LR clutch tap.
(2) Move selector lever to the (R) position.
(3) Read reverse clutch pressure with output stationary (foot on brake) and throttle opened to achieve 1500 rpm.
(4) Reverse and LR clutch pressure should read 165 to 235 psi.
(5) This test checks the reverse clutch hydraulic circuit.

TEST RESULT INDICATIONS

(1) If proper line pressure is found in any one test, the pump and pressure regulator are working properly.
(2) Low pressure in all positions indicates a defective pump, a clogged filter, or a stuck pressure regulator valve.
(3) Clutch circuit leaks are indicated if pressures do not fall within the specified pressure range.
(4) If the overdrive clutch pressure is greater than 5 psi in Step 4 of Test Three, a worn reaction shaft seal ring or a defective solenoid assembly is indicated.
(5) If the underdrive clutch pressure is greater than 5 psi in Step 4 of Test Two A, a defective solenoid assembly or PCM/TCM is the cause.

PRESSURE CHECK SPECIFICATIONS

Gear Selector Position	Actual Gear	Pressure Taps					
		Underdrive Clutch	Overdrive Clutch	Reverse Clutch	Torque Converter Clutch Off	2/4 Clutch	Low/ Reverse Clutch
Park * 0 mph	PARK	0-2	0-5	0-2	60-110	0-2	115-145
REVERSE * 0 mph	REVERSE	0-2	0-7	165-235	50-100	0-2	165-235
NEUTRAL * 0 mph	NEUTRAL	0-2	0-5	0-2	60-110	0-2	115-145
L # 20 mph	FIRST	110-145	0-5	0-2	60-110	0-2	115-145
3 # 30 mph	SECOND	110-145	0-5	0-2	60-110	115-145	0-2
3 # 45 mph	DIRECT	75-95	75-95	0-2	60-90	0-2	0-2
OD # 30 mph	OVERDRIVE	0-2	75-95	0-2	60-90	75-95	0-2
OD # 50 mph	OVERDRIVE WITH TCC	0-2	75-95	0-2	0-5	75-95	0-2

*** Engine speed at 1500 rpm**

 # CAUTION: Both front wheels must be turning at the same speed.

DIAGNOSIS AND TESTING - CLUTCH AIR PRESSURE TESTS

Inoperative clutches can be located using a series of tests by substituting air pressure for fluid pressure (Fig. 5) (Fig. 6). The clutches may be tested by applying air pressure to their respective passages. The valve body must be removed and Tool 6056 installed. To make air pressure tests, proceed as follows:

NOTE: The compressed air supply must be free of all dirt and moisture. Use a pressure of 30 psi.

Remove oil pan and valve body. See Valve body removal.

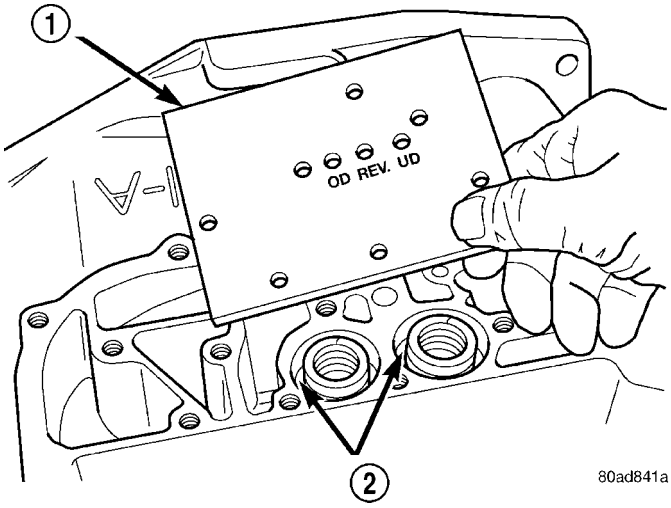

Fig. 5 Air Pressure Test Plate

1 - TOOL 6056
2 - ACCUMULATORS

OVERDRIVE CLUTCH

Apply air pressure to the overdrive clutch apply passage and watch for the push/pull piston to move forward. The piston should return to its starting position when the air pressure is removed.

REVERSE CLUTCH

Apply air pressure to the reverse clutch apply passage and watch for the push/pull piston to move rearward. The piston should return to its starting position when the air pressure is removed.

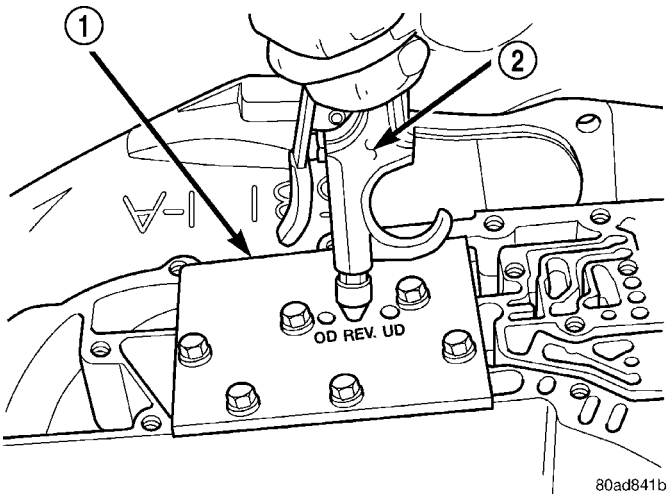

Fig. 6 Testing Reverse Clutch

1 - TOOL 6056
2 - AIR NOZZLE

2/4 CLUTCH

Apply air pressure to the feed hole located on the 2/4 clutch retainer. Look in the area where the 2/4 piston contacts the first separator plate and watch carefully for the 2/4 piston to move rearward. The piston should return to its original position after the air pressure is removed.

LOW/REVERSE CLUTCH

Apply air pressure to the low/reverse clutch feed hole (rear of case, between 2 bolt holes). Then, look in the area where the low/reverse piston contacts the first separator plate. Watch carefully for the piston to move forward. The piston should return to its original position after the air pressure is removed.

UNDERDRIVE CLUTCH

Because this clutch piston cannot be seen, its operation is checked by function. Air pressure is applied to the low/reverse and the 2/4 clutches. This locks the output shaft. Use a piece of rubber hose wrapped around the input shaft and a pair of clamp-on pliers to turn the input shaft. Next apply air pressure to the underdrive clutch. The input shaft should not rotate with hand torque. Release the air pressure and confirm that the input shaft will rotate.

40TE AUTOMATIC TRANSAXLE (Continued)

DIAGNOSIS AND TESTING - TORQUE CONVERTER HOUSING FLUID LEAKAGE

When diagnosing converter housing fluid leaks, three actions must be taken before repair:

(1) Verify proper transmission fluid level.

(2) Verify that the leak originates from the converter housing area and is transmission fluid.

(3) Determine the true source of the leak.

Fluid leakage at or around the torque converter area may originate from an engine oil leak (Fig. 7). The area should be examined closely. Factory fill fluid is red and, therefore, can be distinguished from engine oil.

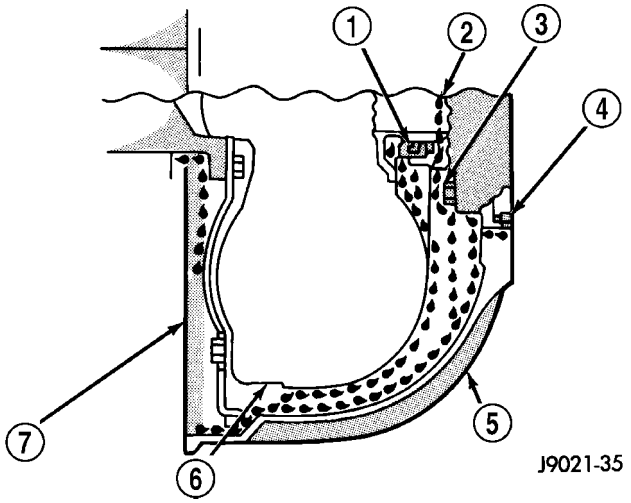

Fig. 7 Converter Housing Leak Paths

1 - PUMP SEAL
2 - PUMP VENT
3 - PUMP BOLT
4 - PUMP GASKET
5 - CONVERTER HOUSING
6 - CONVERTER
7 - REAR MAIN SEAL LEAK

Some suspected converter housing fluid leaks may not be leaks at all. They may only be the result of residual fluid in the converter housing, or excess fluid spilled during factory fill, or fill after repair. Converter housing leaks have several potential sources. Through careful observation, a leak source can be identified before removing the transmission for repair.

Pump seal leaks tend to move along the drive hub and onto the rear of the converter (Fig. 7). Pump o-ring or pump body leaks follow the same path as a seal leak. Pump attaching bolt leaks are generally deposited on the inside of the converter housing and not on the converter itself. Pump seal or gasket leaks usually travel down the inside of the converter housing (Fig. 7).

TORQUE CONVERTER LEAKAGE

Possible sources of torque converter leakage are:

- Torque converter weld leaks at the outside diameter weld (Fig. 8).
- Torque converter hub weld (Fig. 8).

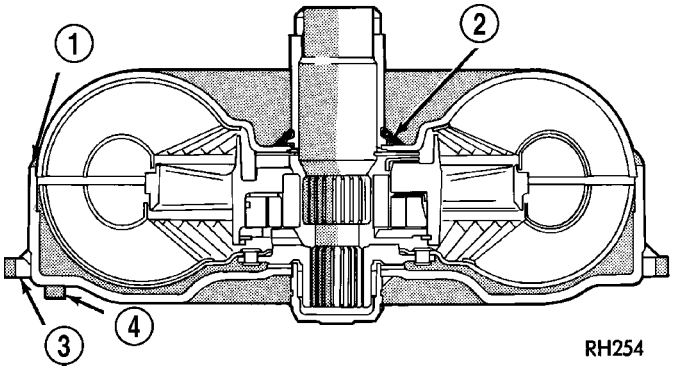

Fig. 8 Converter Leak Points - Typical

1 - OUTSIDE DIAMETER WELD
2 - TORQUE CONVERTER HUB WELD
3 - STARTER RING GEAR
4 - LUG

REMOVAL

NOTE: If transaxle assembly is being replaced or overhauled (clutch and/or seal replacement), it is necessary to perform the "Quick-Learn" Procedure. (Refer to 8 - ELECTRICAL/ELECTRONIC CONTROL MODULES/TRANSMISSION CONTROL MODULE - STANDARD PROCEDURE)

(1) Disconnect battery cables.

(2) Remove battery shield (Fig. 9).

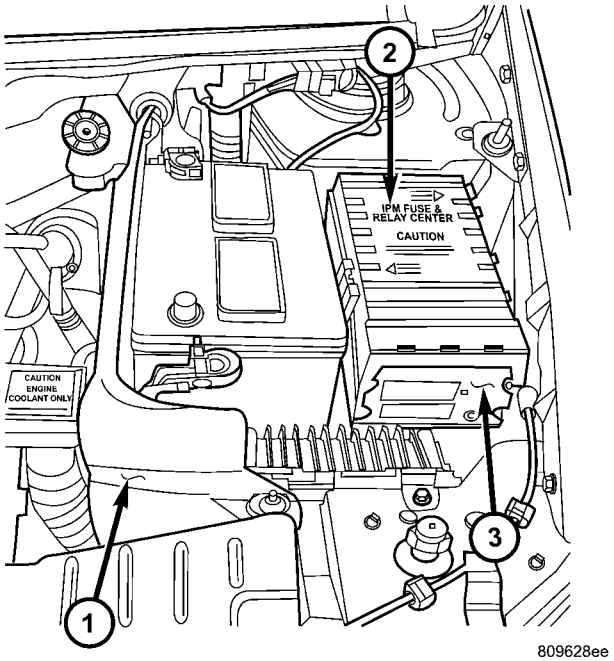

Fig. 9 Battery Thermal Guard

1 - BATTERY THERMOWRAP (IF EQUIPPED)
2 - INTEGRATED POWER MODULE
3 - FRONT CONTROL MODULE

40TE AUTOMATIC TRANSAXLE (Continued)

(3) Remove coolant recovery bottle (Fig. 10).

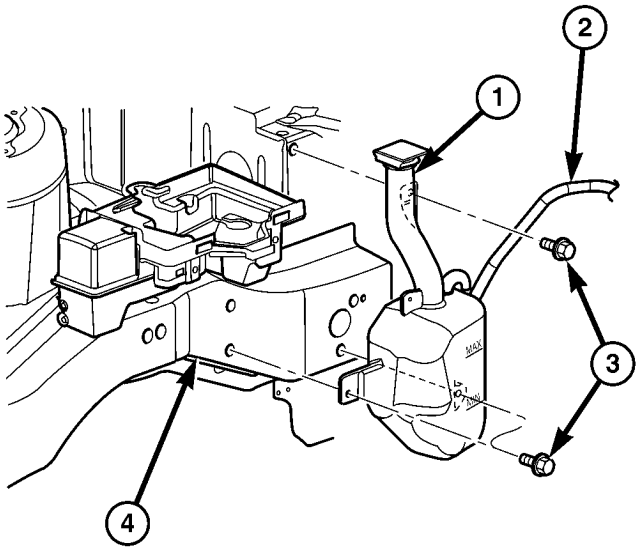

809b9cf4

Fig. 10 Coolant Recovery Bottle

1 - COOLANT RECOVERY CONTAINER
2 - HOSE
3 - BOLT
4 - SUB FRAME RAIL

(4) Remove fluid level indicator/tube assembly. Plug opening to prevent debris from entering transaxle.

(5) Disconnect transaxle oil cooler lines using Tool 8875A. (Refer to 7 - COOLING/TRANSMISSION - STANDARD PROCEDURE). Install plugs to prevent debris intrusion.

(6) Disconnect input and output shaft speed sensor connectors (Fig. 11).

(7) Disconnect transmission range sensor (TRS) connector (Fig. 11).

(8) Disconnect solenoid/pressure switch assembly connector (Fig. 11).

(9) Disconnect gear shift cable from manual valve lever and upper mount bracket (Fig. 12).

(10) Disconnect crankshaft position sensor (if equipped). Remove sensor from bellhousing.

(11) Reposition leak detection pump harness and hoses.

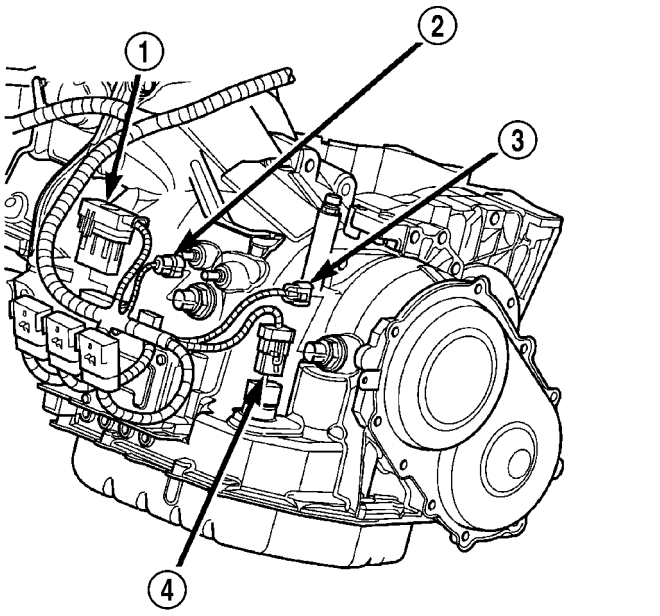

80c4f434

Fig. 11 Component Connector Location—Typical

1 - SOLENOID/PRESSURE SWITCH ASSY. CONNECTOR
2 - INPUT SPEED SENSOR CONNECTOR
3 - OUTPUT SPEED SENSOR CONNECTOR
4 - TRANSMISSION RANGE SENSOR CONNECTOR

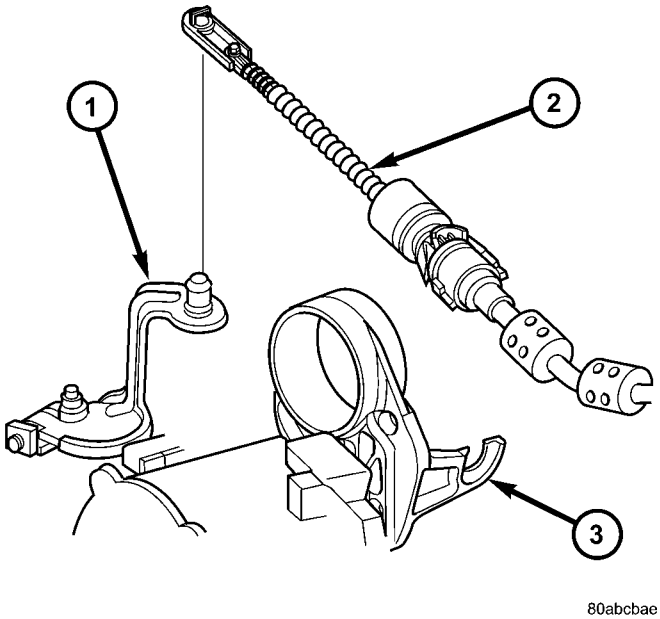

80abcbae

Fig. 12 Gearshift Cable at Transaxle - Typical

1 - MANUAL VALVE LEVER
2 - GEAR SHIFT CABLE
3 - UPPER MOUNT BRACKET

40TE AUTOMATIC TRANSAXLE (Continued)

(12) Remove rear mount bracket-to-transaxle case bolts (Fig. 13).

(13) Remove transaxle upper bellhousing-to-block bolts.

(14) Raise vehicle on hoist.

(15) Remove transaxle oil pan and drain fluid into suitable container.

(16) Remove front wheel/tire assemblies.

(17) Remove left and right halfshaft assemblies. (Refer to 3 - DIFFERENTIAL & DRIVELINE/HALF SHAFT - REMOVAL)

(18) AWD models: Remove power transfer unit. (Refer to 21 - TRANSMISSION/TRANSAXLE/ POWER TRANSFER UNIT - REMOVAL)

(19) Remove rear mount bracket-to-transaxle case lower (horizontal) bolt (Fig. 13).

(20) Remove front mount/bracket assembly.

(21) Remove starter motor.

(22) Remove lateral bending brace.

(23) Remove inspection cover.

(24) Remove torque converter-to-drive plate bolts.

(25) Support engine/transaxle assembly at engine oil pan with screw jack and wood block.

(26) Partially remove left wheelhouse splash shield to gain access to and remove upper mount thru-bolt (Fig. 14).

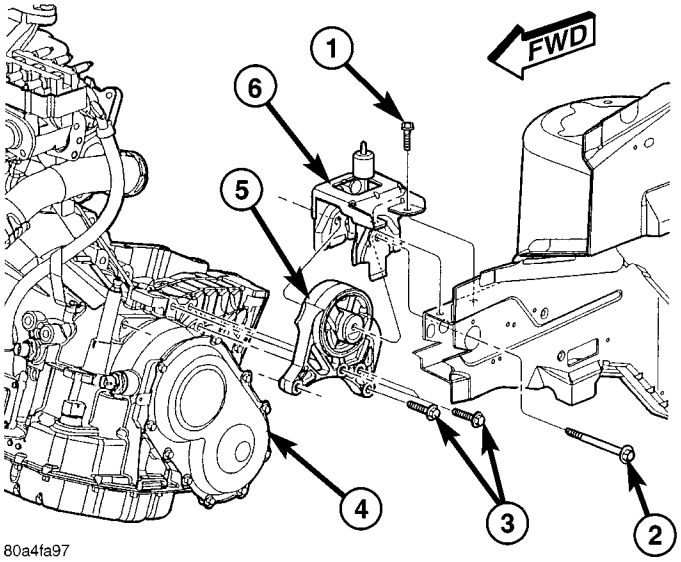

Fig. 14 Left Mount-to-Bracket

1 - BOLT - BRACKET TO FRAME RAIL
2 - BOLT - MOUNT TO RAIL THROUGH
3 - BOLT - LEFT MOUNT TO TRANSAXLE
4 - TRANSAXLE
5 - MOUNT - LEFT
6 - BRACKET - LEFT MOUNT

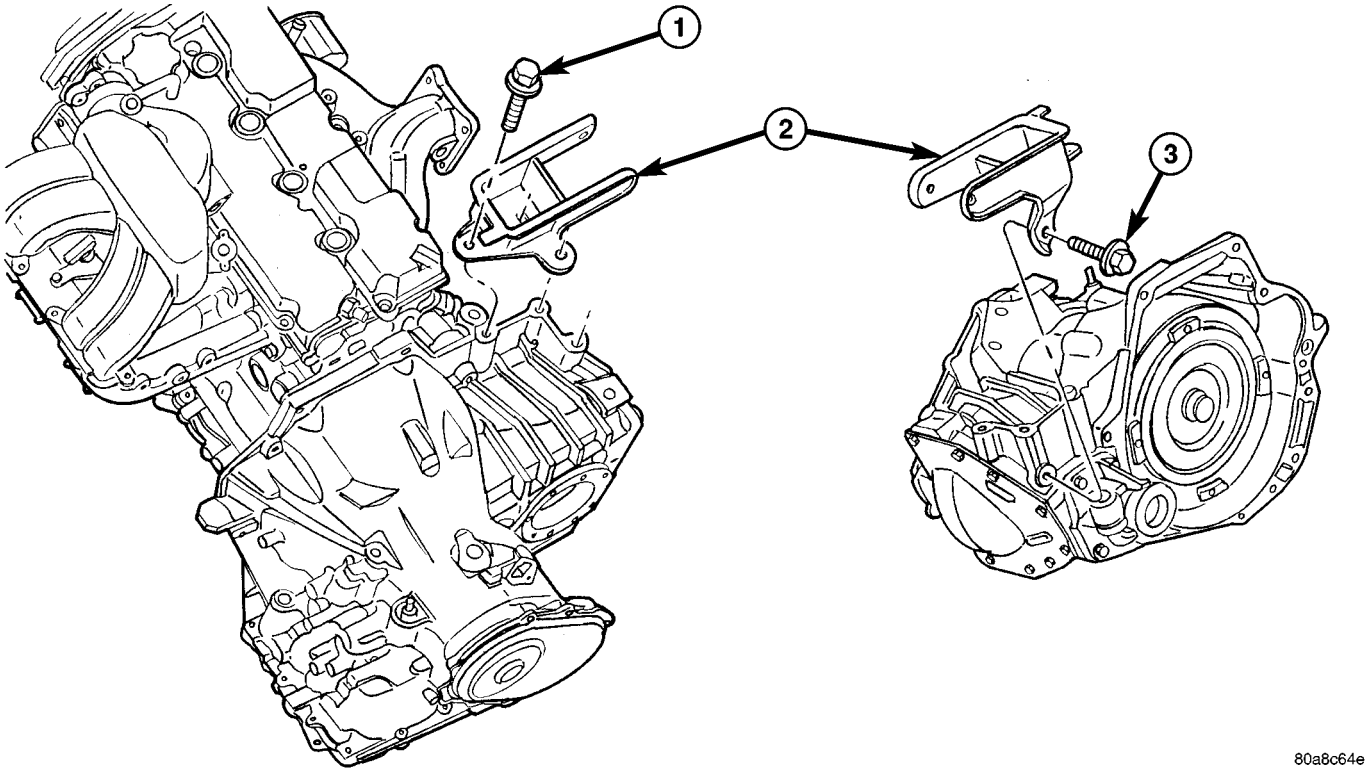

Fig. 13 Rear Mount Bracket - Typical

1 - BOLT - VERTICAL
2 - BRACKET - REAR MOUNT
3 - BOLT - HORIZONTAL

(27) Lower engine/transaxle assembly with screw jack.

(28) Obtain helper and/or transmission jack. Secure transmission jack to transaxle assembly.

(29) Remove upper mount bracket from transaxle (Fig. 14).

(30) Remove remaining transaxle bellhousing-to-engine bolts.

(31) Remove transaxle assembly from vehicle.

DISASSEMBLY

NOTE: If transaxle is being overhauled (clutch and/or seal replacement) or replaced, it is necessary to perform the PCM/TCM Quick Learn Procedure. (Refer to 8 - ELECTRICAL/ELECTRONIC CONTROL MODULES/POWERTRAIN/TRANSMISSION CONTROL MODULE - STANDARD PROCEDURE)

NOTE: This procedure does not include final drive (differential) disassembly.

(1) Remove input and output speed sensors.

(2) Remove three (3) solenoid/pressure switch assembly-to-case bolts.

(3) Remove solenoid/pressure switch assembly and gasket (Fig. 15).

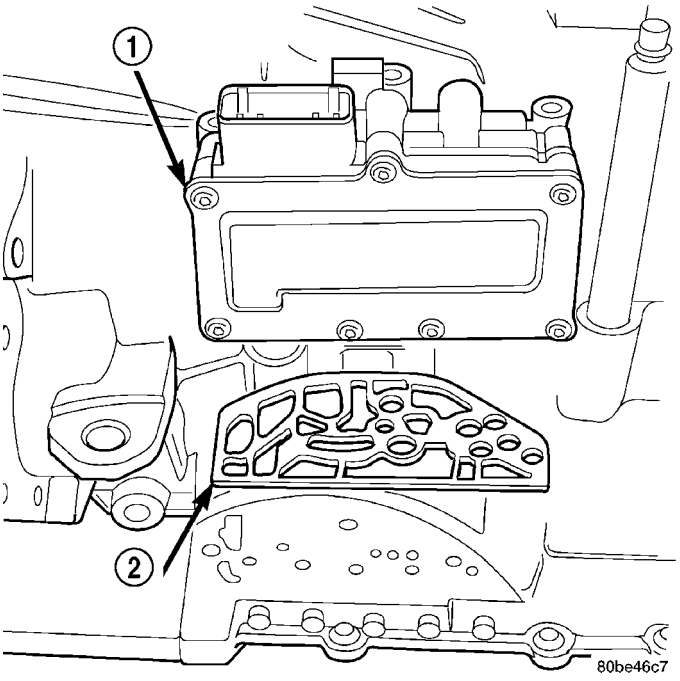

Fig. 15 Solenoid/Pressure Switch Assembly and Gasket

1 - SOLENOID/PRESSURE SWITCH ASSEMBLY
2 - GASKET

(4) Remove oil pan-to-case bolts (Fig. 16).

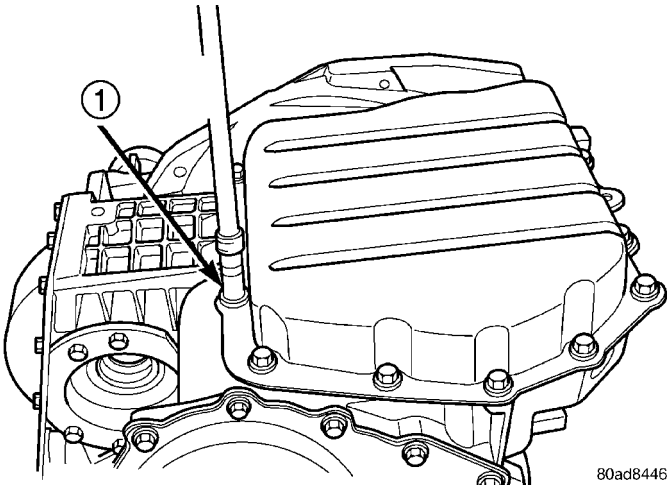

Fig. 16 Remove Oil Pan Bolts

1 - OIL PAN BOLTS (USE RTV UNDER BOLT HEADS)

(5) Remove oil pan (Fig. 17).

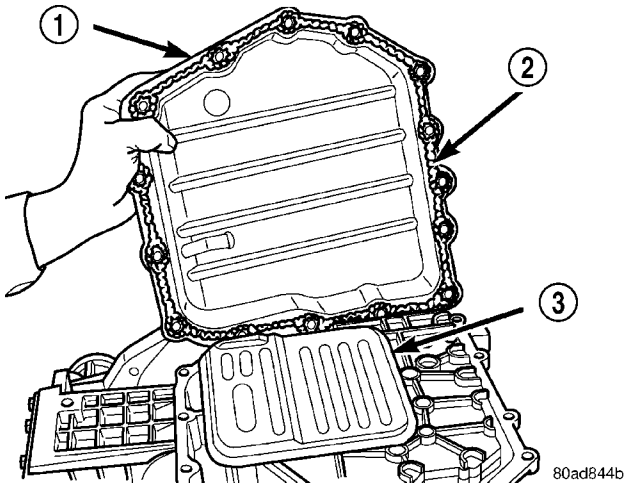

Fig. 17 Remove Oil Pan

1 - OIL PAN
2 - 1/8 INCH BEAD OF MOPAR® ATF RTV (MS-GF41)
3 - OIL FILTER

40TE AUTOMATIC TRANSAXLE (Continued)

(6) Remove oil filter (Fig. 18).

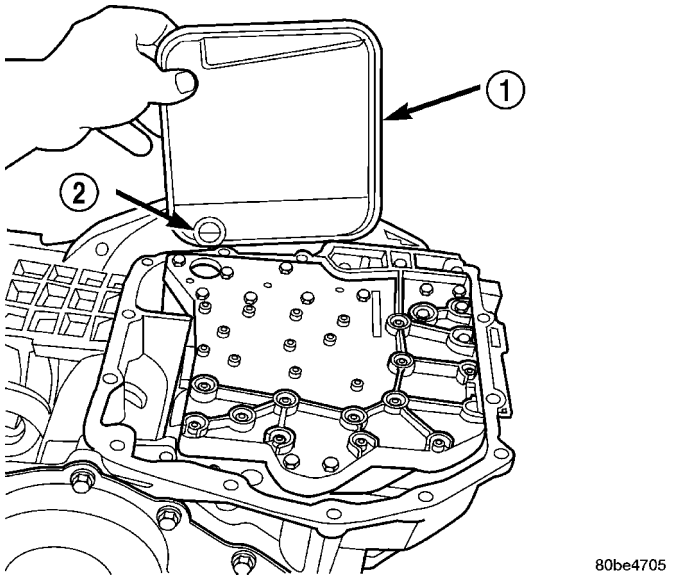

Fig. 18 Remove Filter and O-Ring

1 - OIL FILTER
2 - O-RING

(7) Turn manual valve fully clock-wise to get park rod into position for removal.

(8) Remove valve body-to-case bolts (Fig. 19).

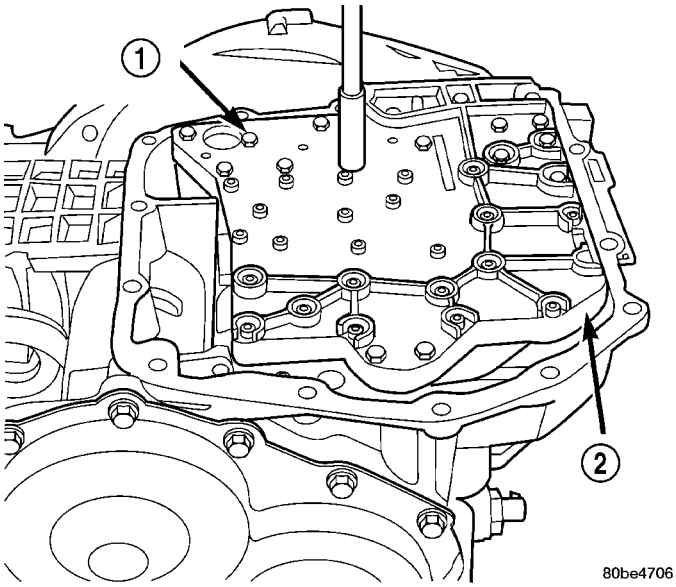

Fig. 19 Remove Valve Body-to-Case Bolts

1 - VALVE BODY ATTACHING BOLTS (18)
2 - VALVE BODY

CAUTION: Do not handle the valve body assembly from the manual valve. Damage can result.

(9) Using a screwdriver, push park rod rollers away from guide bracket (Fig. 20) and remove valve body assembly (Fig. 21).

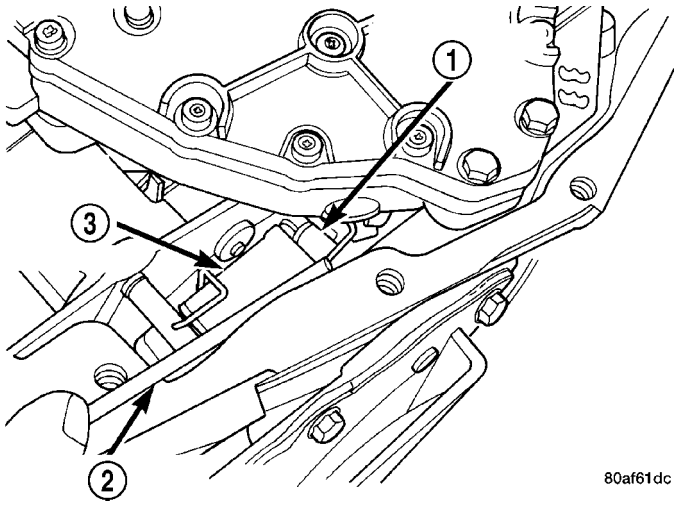

Fig. 20 Push Park Rod Rollers from Guide Bracket

1 - PARK SPRAG ROLLERS
2 - SCREWDRIVER
3 - PARK SPRAG GUIDE BRACKET

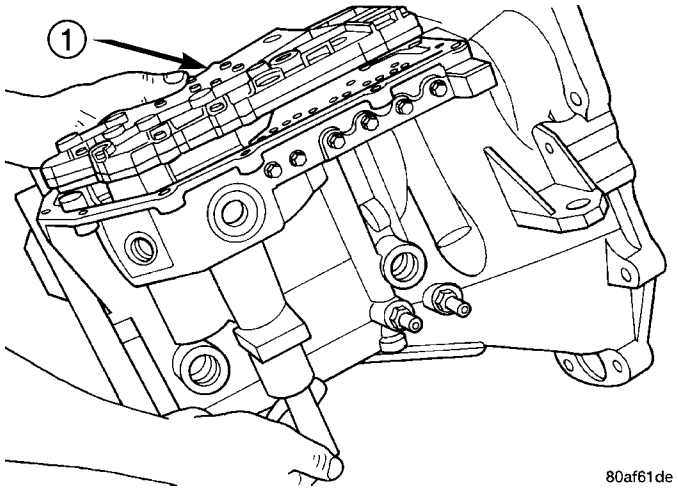

Fig. 21 Valve Body Removal/Installation

1 - VALVE BODY

40TE AUTOMATIC TRANSAXLE (Continued)

NOTE: Depending on engine application, some accumulators will have two springs and others will have one spring. The springs are color-coded according to application and year. When disassembling, mark accumulator spring location to ease assembly.

(10) Remove underdrive and overdrive accumulators (Fig. 22).

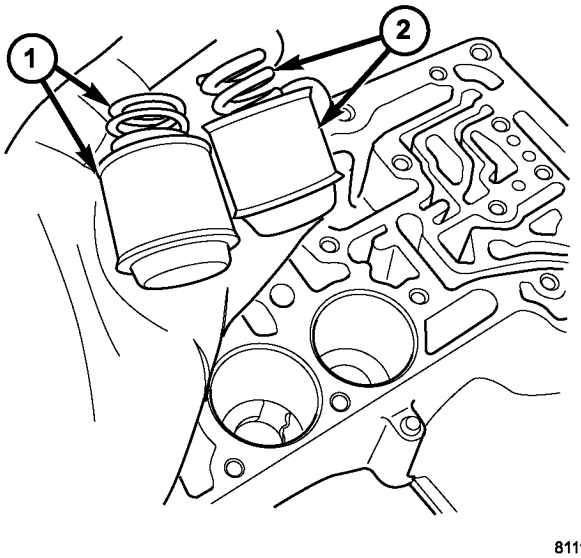

Fig. 22 Underdrive and Overdrive Accumulators

1 - OVERDRIVE PISTON AND SPRING
2 - UNDERDRIVE PISTON AND SPRING

(11) Remove low/reverse accumulator snap ring (Fig. 23).

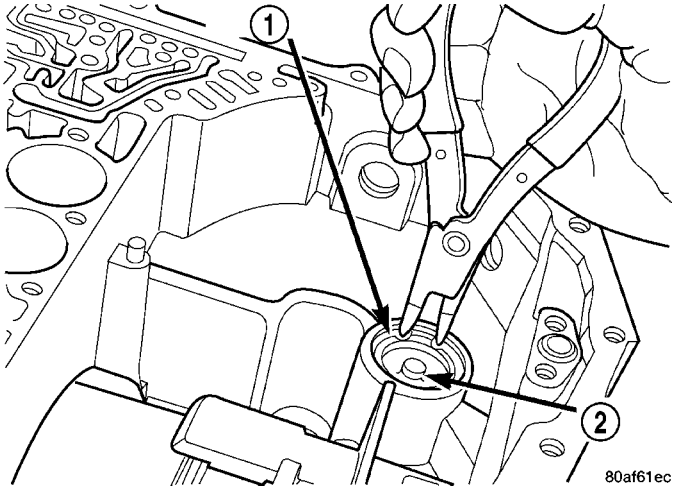

Fig. 23 Remove Low/Reverse Accumulator Snap Ring

1 - SNAP RING
2 - PLUG

(12) Remove low/reverse accumulator plug (Fig. 24).

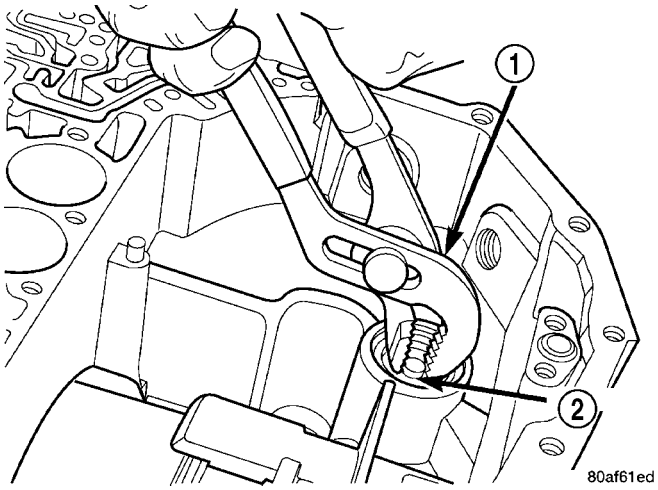

Fig. 24 Remove Low/Reverse Accumulator Plug

1 - ADJUSTABLE PLIERS
2 - PLUG

(13) Remove low/reverse accumulator piston using suitable pliers (Fig. 25). Remove piston and springs (Fig. 26).

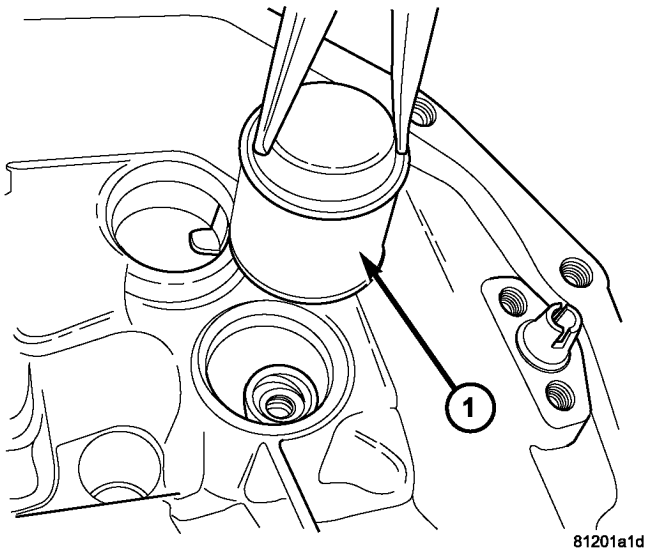

Fig. 25 Low/Reverse Accumulator Piston

1 - ACCUMULATOR PISTON

40TE AUTOMATIC TRANSAXLE (Continued)

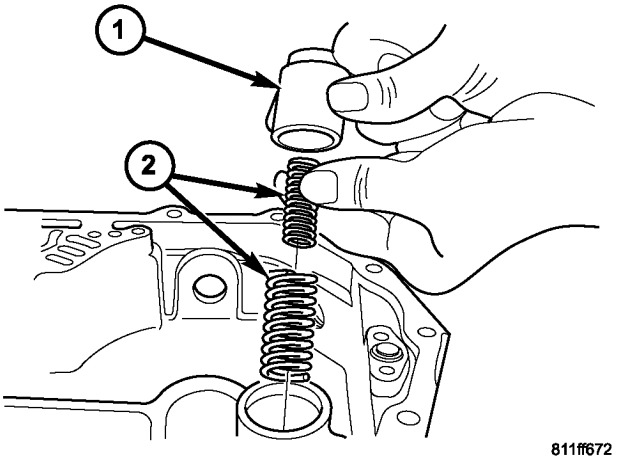

Fig. 26 Low/Reverse Accumulator

1 - PISTON
2 - RETURN SPRINGS

(14) Measure input shaft end play. Place transaxle so input shaft is vertical. Set up end play set and dial indicator as shown in (Fig. 27). **Input shaft end play should be within 0.13-0.64 mm (0.005-0.025 in.)** If outside of this range, a #4 thrust plate change is required. Record indicator reading for reference upon reassembly.

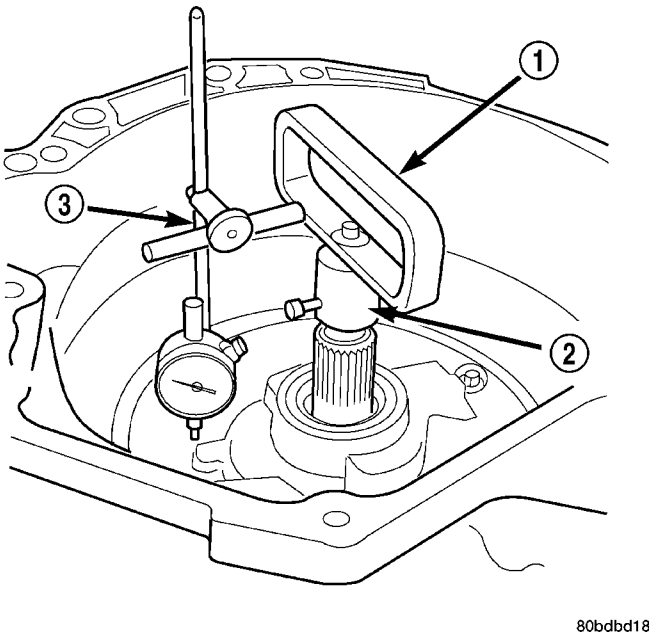

Fig. 27 Measure Input Shaft End Play Using Tool 8266—Typical

1 - TOOL 8266–8
2 - TOOL 8266–2
3 - TOOL C-3339

(15) Remove oil pump-to-case bolts (Fig. 28).

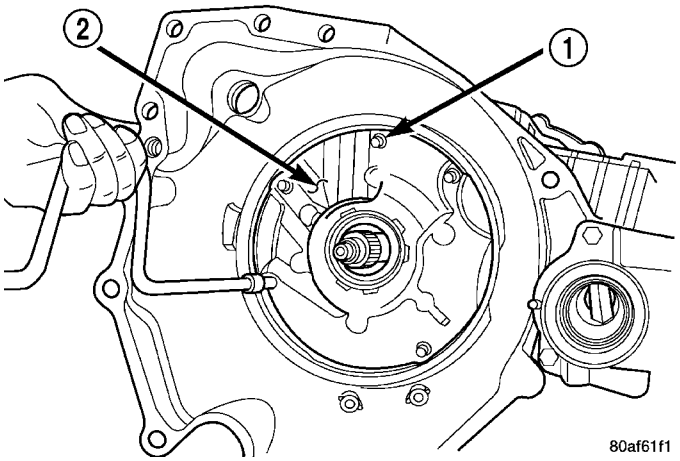

Fig. 28 Remove Oil Pump-to-Case Bolts

1 - PUMP ATTACHING BOLTS
2 - PUMP HOUSING

CAUTION: Be sure input speed sensor is removed before removing oil pump.

(16) Install pullers Tool C-3752 as shown in (Fig. 29).

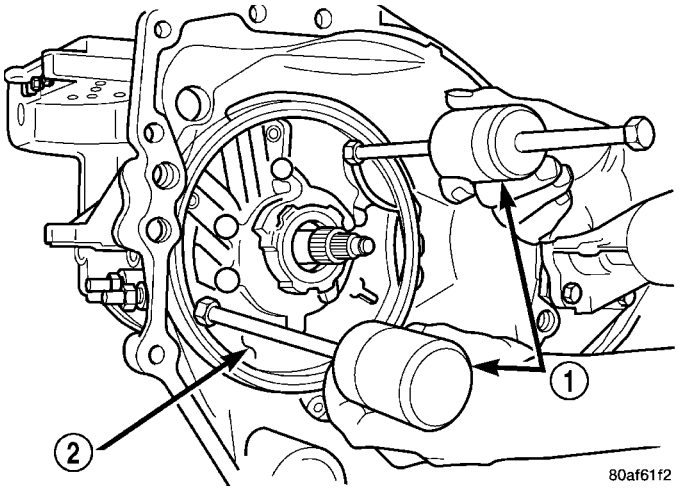

Fig. 29 Install Tool C-3752

1 - PULLERS TOOL C-3752
2 - PUMP

40TE AUTOMATIC TRANSAXLE (Continued)

(17) Remove oil pump assembly (Fig. 30) (Fig. 31).

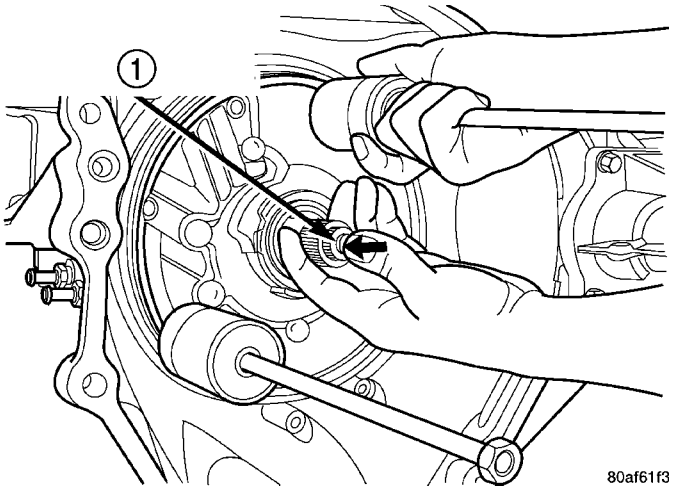

Fig. 30 Remove Oil Pump

1 - "PUSH IN" ON INPUT SHAFT WHILE REMOVING PUMP

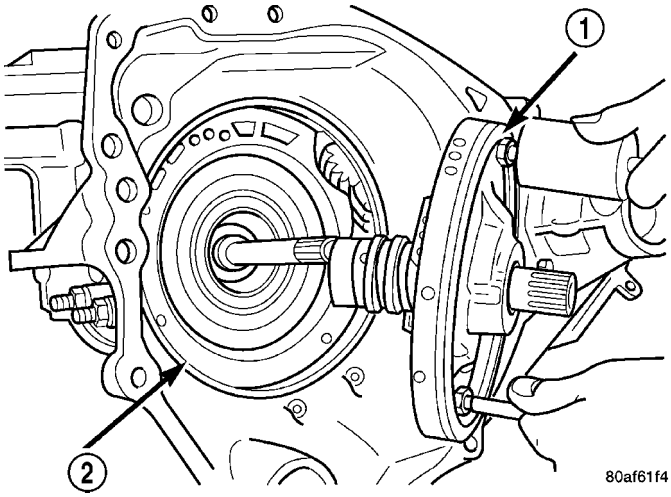

Fig. 31 Oil Pump Removed

1 - OIL PUMP
2 - GASKET

(18) Remove oil pump gasket (Fig. 32).

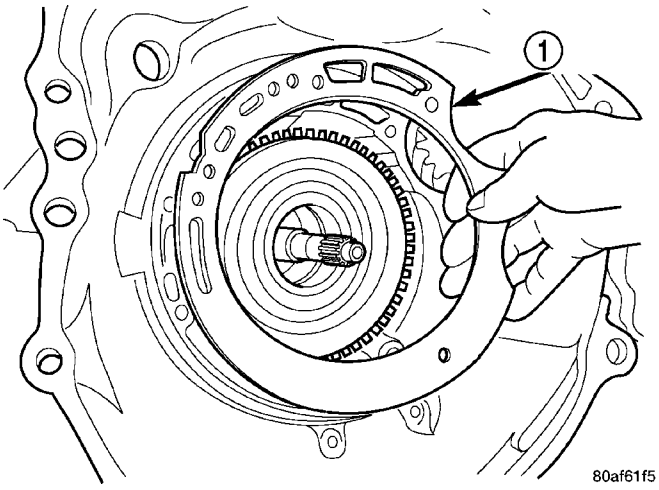

Fig. 32 Remove Oil Pump Gasket

1 - PUMP GASKET

CAUTION: If transaxle failure has occurred, the cooler bypass valve must be replaced. Do not re-use or attempt to clean valve.

(19) Remove cooler bypass valve (Fig. 33).

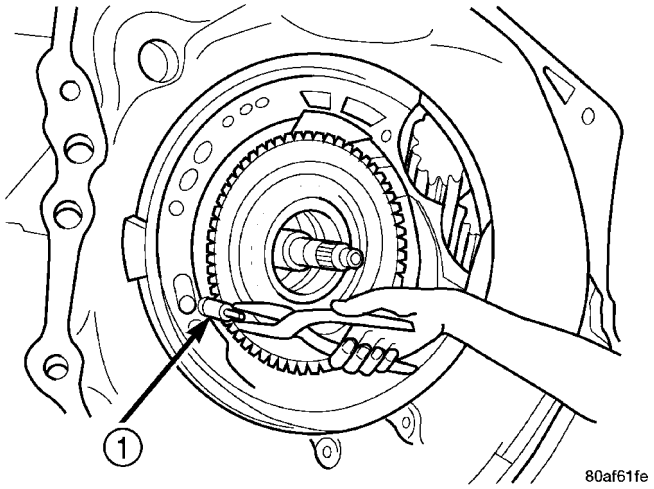

Fig. 33 Remove Bypass Valve

1 - COOLER BYPASS VALVE

(20) Remove #1 needle bearing (Fig. 34).

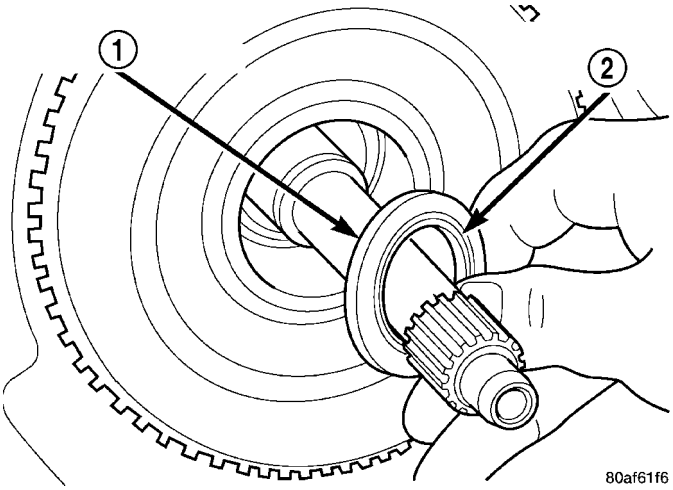

Fig. 34 Remove No. 1 Caged Needle Bearing

1 - #1 CAGED NEEDLE BEARING
2 - NOTE: TANGED SIDE OUT

(21) Remove input clutch assembly (Fig. 35).

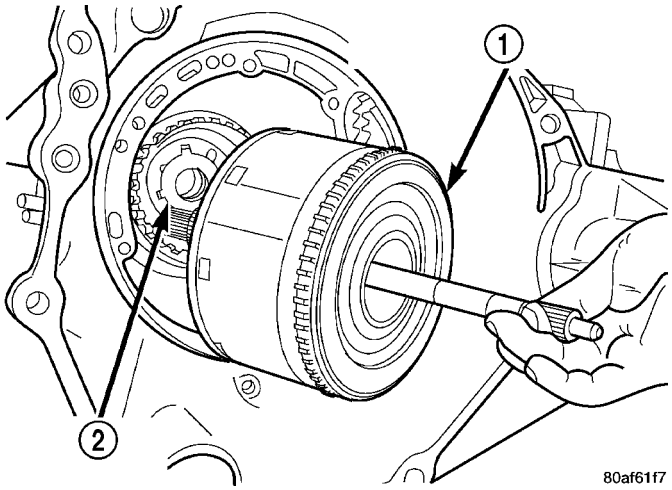

Fig. 35 Remove Input Clutch Assembly

1 - INPUT CLUTCH ASSEMBLY
2 - #4 THRUST WASHER

(22) Remove #4 thrust plate (Fig. 36).

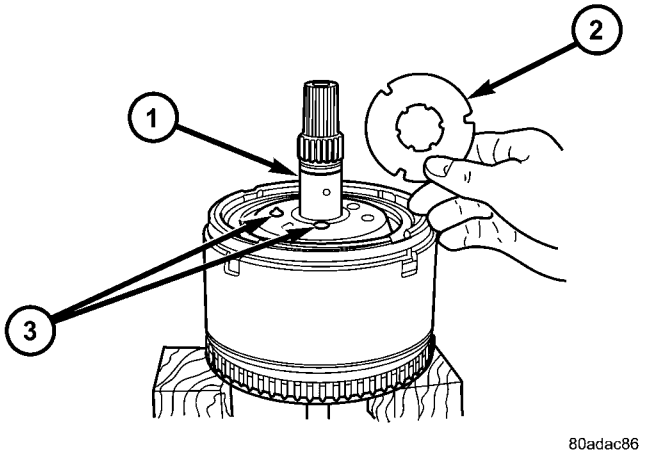

Fig. 36 No. 4 Thrust Plate

1 - OVERDRIVE SHAFT ASSEMBLY
2 - #4 THRUST PLATE (SELECT)
3 - 3 DABS OF PETROLATUM FOR RETENTION

(23) Remove front sun gear assembly and #4 thrust washer (Fig. 37).

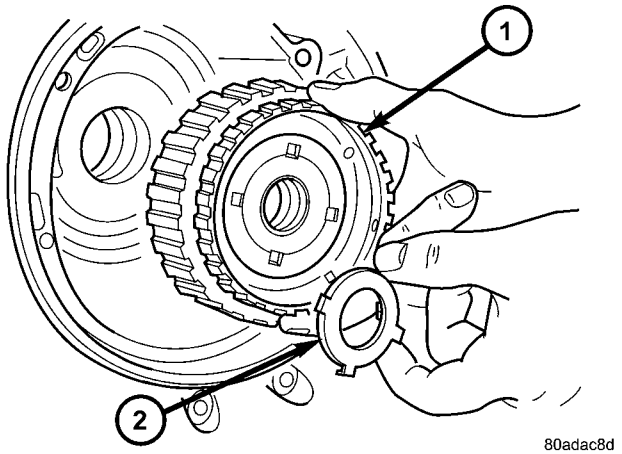

Fig. 37 Remove Front Sun Gear Assembly

1 - FRONT SUN GEAR ASSEMBLY
2 - #4 THRUST WASHER (FOUR TABS)

40TE AUTOMATIC TRANSAXLE (Continued)

(24) Remove front carrier/rear annulus assembly and #6 needle bearing (Fig. 38).

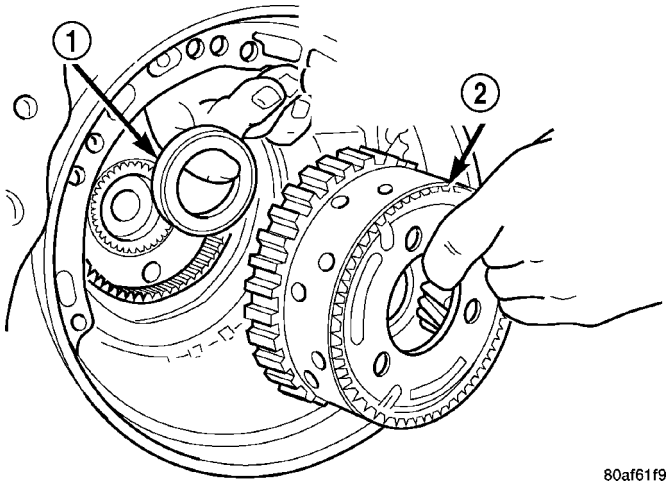

Fig. 38 Remove Front Carrier/Rear Annulus Assembly

1 - #6 NEEDLE BEARING
2 - FRONT CARRIER AND REAR ANNULUS ASSEMBLY (TWIST AND PULL OR PUSH TO REMOVE OR INSTALL).

(25) Remove rear sun gear and #7 needle bearing (Fig. 39).

NOTE: The number 7 needle bearing has three anti-reversal tabs and is common with the number five and number two position. The orientation should allow the bearing to seat flat against the rear sun gear (Fig. 40). A small amount of petrolatum can be used to hold the bearing to the rear sun gear.

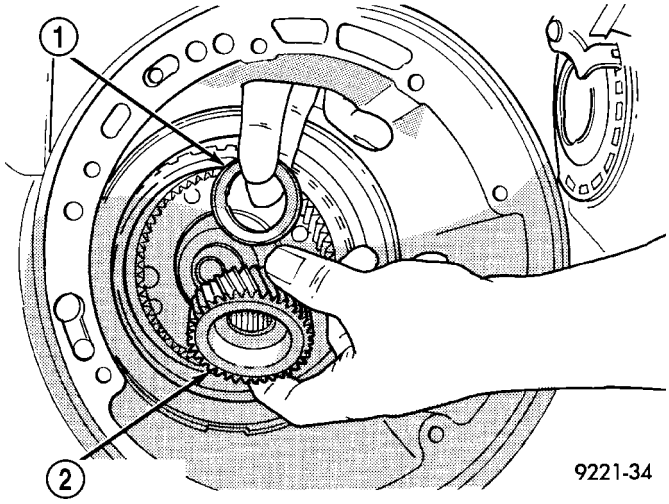

Fig. 39 Remove Rear Sun Gear

1 - #7 NEEDLE BEARING
2 - REAR SUN GEAR

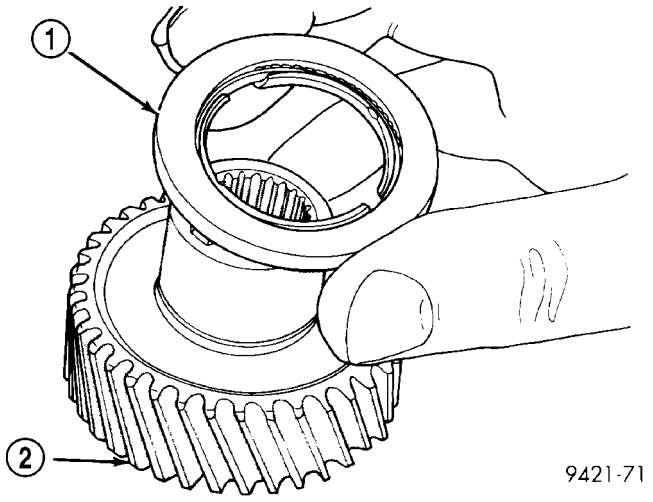

Fig. 40 Number 7 Bearing

1 - #7 NEEDLE BEARING
2 - REAR SUN GEAR

(26) Setup tool 5058 as shown in (Fig. 41). Compress 2/4 clutch return spring (just enough to remove snap ring) and remove snap ring.

NOTE: Verify that Tool 5058 is centered properly over the 2/4 clutch retainer before compressing. If necessary, fasten the 5058 bar to the bellhousing flange with any combination of locking pliers and bolts to center the tool properly.

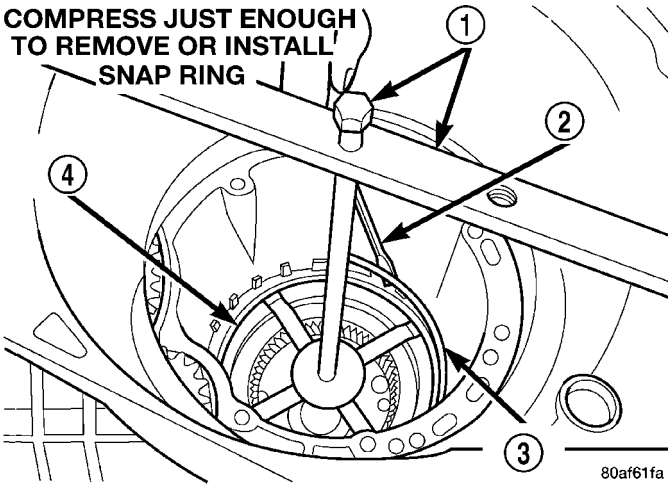

Fig. 41 Remove 2/4 Clutch Retainer Snap Ring

1 - TOOL 5058
2 - SCREWDRIVER
3 - SNAP RING
4 - 2/4 CLUTCH RETAINER

40TE AUTOMATIC TRANSAXLE (Continued)

NOTE: The 2/4 Clutch Piston has bonded seals which are not individually serviceable. Seal replacement requires replacement of the piston assembly.

(27) Remove 2/4 clutch retainer (Fig. 42).

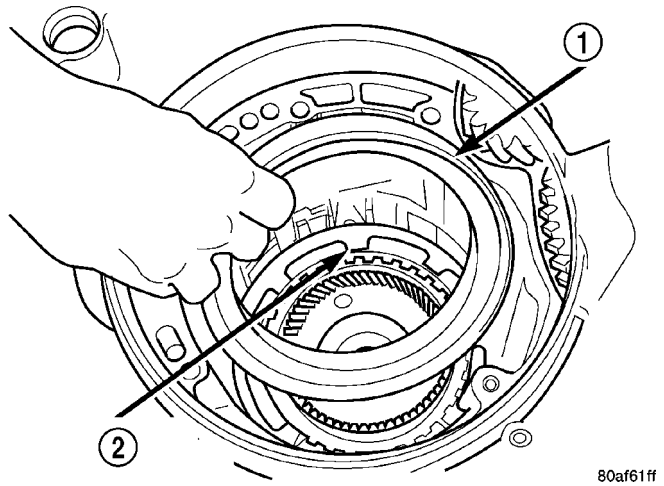

Fig. 42 2/4 Clutch Retainer

1 - 2/4 CLUTCH RETAINER
2 - 2/4 CLUTCH RETURN SPRING

(28) Remove 2/4 clutch return spring (Fig. 43).

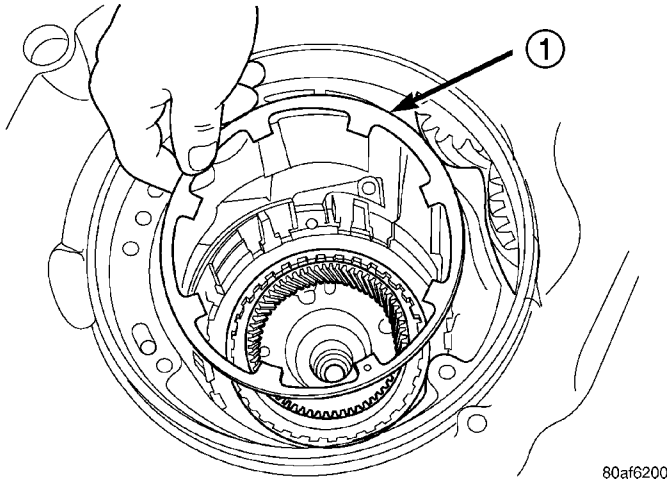

Fig. 43 Remove 2/4 Clutch Return Spring

1 - 2/4 CLUTCH RETURN SPRING

(29) Remove 2/4 clutch pack (Fig. 44). **Tag 2/4 clutch pack for reassembly identification.**

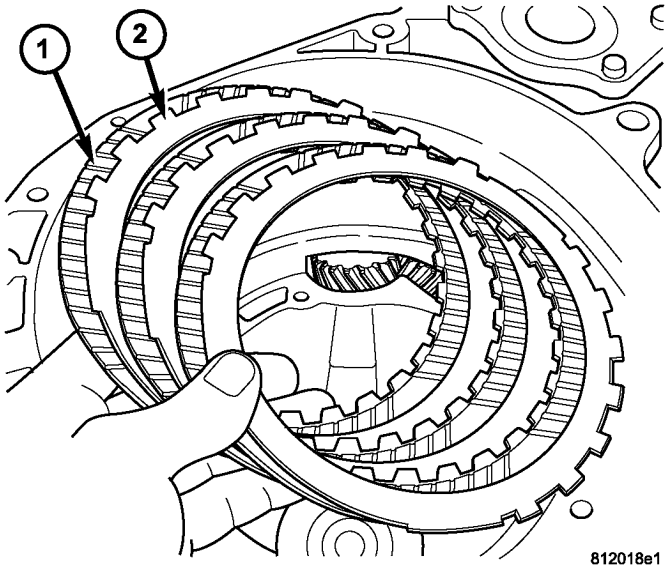

Fig. 44 Remove 2/4 Clutch Pack

1 - CLUTCH DISC
2 - CLUTCH PLATE

(30) Remove tapered snap ring (Fig. 45).

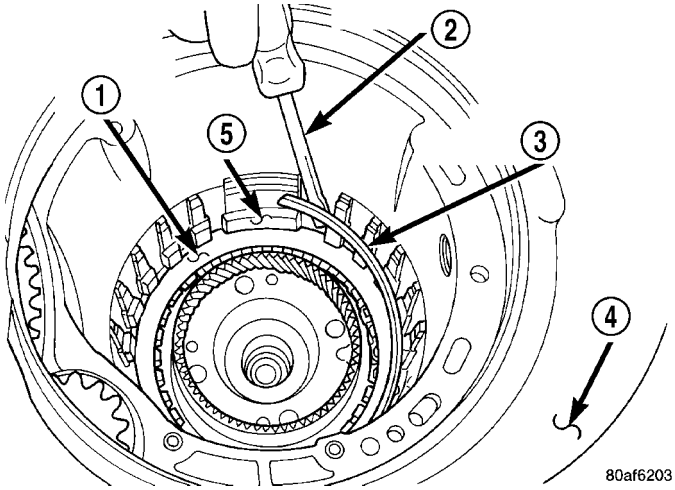

Fig. 45 Remove Tapered Snap Ring

1 - LOW/REVERSE CLUTCH REACTION PLATE
2 - SCREWDRIVER
3 - LOW/REVERSE TAPERED SNAP RING (TAPERED SIDE UP)
4 - OIL PAN FACE
5 - LONG TAB

40TE AUTOMATIC TRANSAXLE (Continued)

(31) Remove low/reverse reaction plate (Fig. 46).

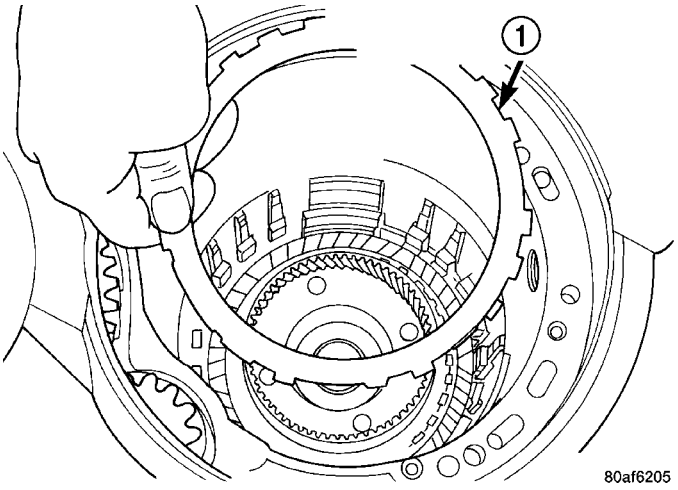

Fig. 46 Remove Low/Reverse Reaction Plate

1 - LOW/REVERSE REACTION PLATE (FLAT SIDE UP)

(32) Remove one low/reverse clutch disc (Fig. 47).

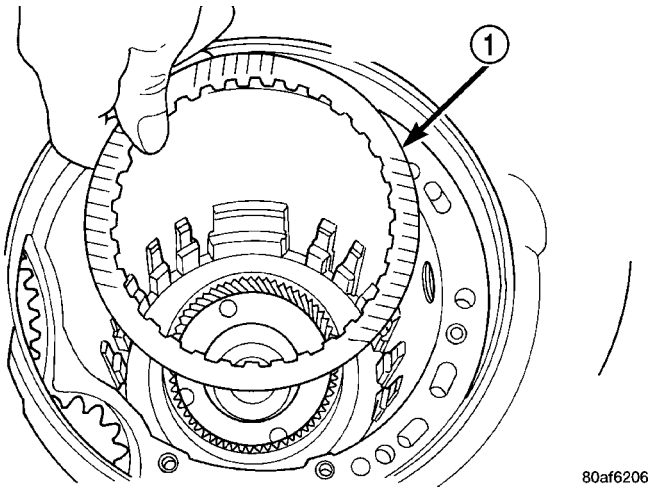

Fig. 47 Remove One Disc

1 - ONE DISC FROM LOW/REVERSE CLUTCH

(33) Remove low/reverse reaction plate snap ring (Fig. 48).

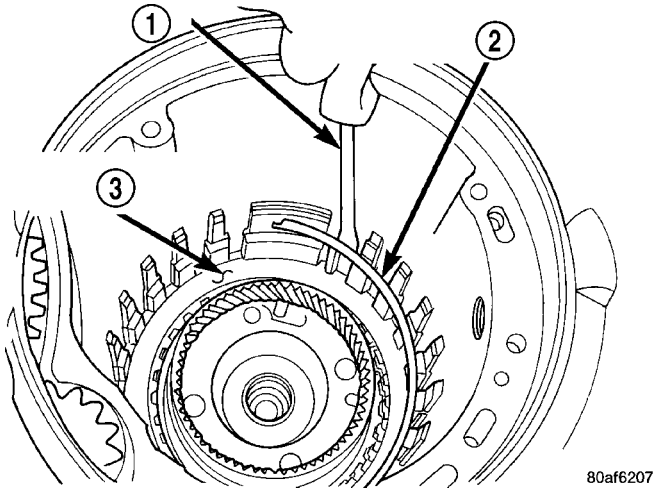

Fig. 48 Remove Low/Reverse Reaction Plate Snap Ring

1 - SCREWDRIVER
2 - LOW/REVERSE REACTION PLATE FLAT SNAP RING
3 - DO NOT SCRATCH CLUTCH PLATE

(34) Remove low/reverse clutch pack (Fig. 49).

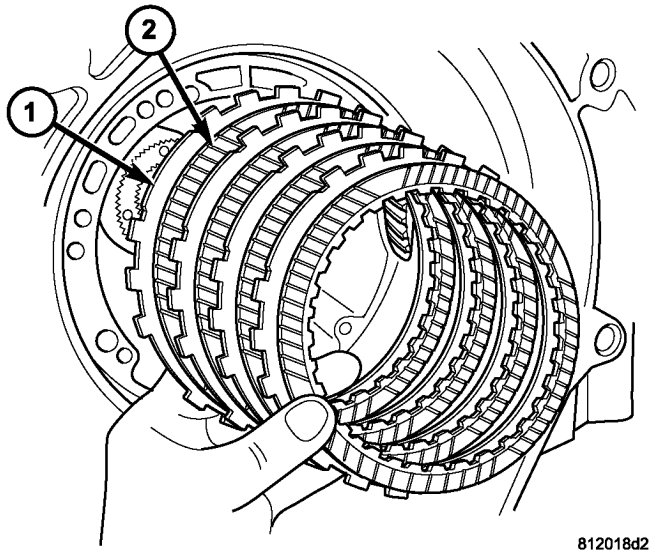

Fig. 49 Remove Low/Reverse Clutch

1 - CLUTCH PLATE
2 - CLUTCH DISC

40TE AUTOMATIC TRANSAXLE (Continued)

(35) Remove transfer gear cover-to-case bolts (Fig. 50).

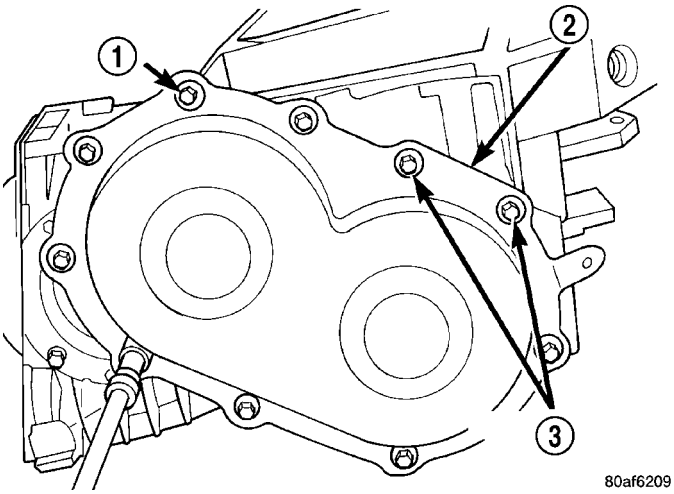

Fig. 50 Remove Rear Cover Bolts

1 - REAR COVER BOLTS
2 - REAR COVER
3 - USE SEALANT ON BOLTS

(36) Remove transfer gear cover (Fig. 51).

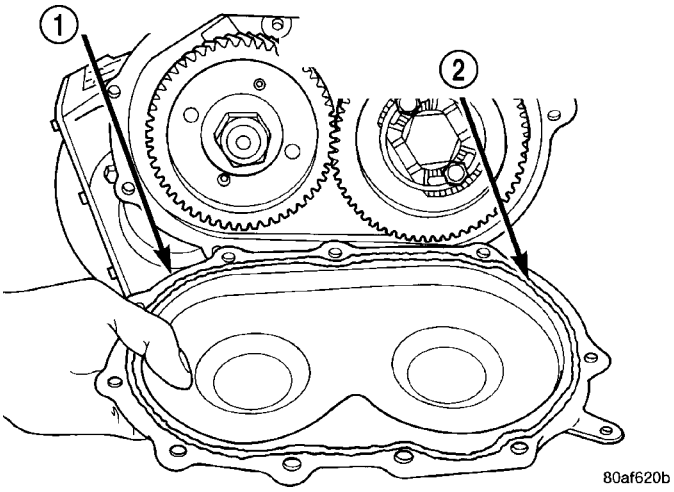

Fig. 51 Remove Rear Cover

1 - REAR COVER
2 - 1/8 INCH BEAD OF MOPAR® ATF RTV (MS-GF41) AS SHOWN

(37) Using Tool 6259, remove transfer shaft gear-to-shaft nut and coned washer (Fig. 52) (Fig. 53).

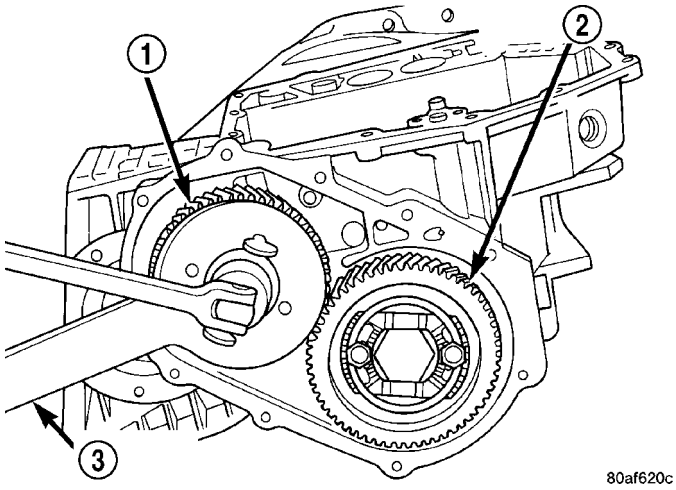

Fig. 52 Remove Transfer Shaft Gear Nut

1 - TRANSFER SHAFT GEAR
2 - OUTPUT GEAR
3 - SPECIAL TOOL 6259

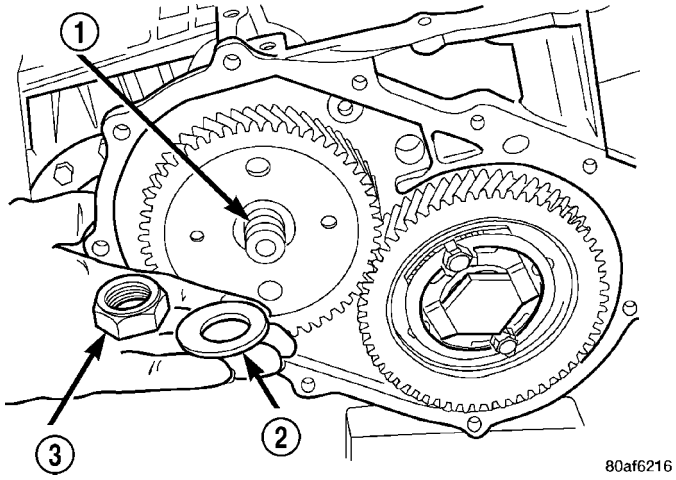

Fig. 53 Transfer Shaft Gear Nut and Coned Washer

1 - TRANSFER SHAFT
2 - LOCK WASHER
3 - NUT

40TE AUTOMATIC TRANSAXLE (Continued)

(38) Using tool L-4407A, remove transfer shaft gear (Fig. 54).

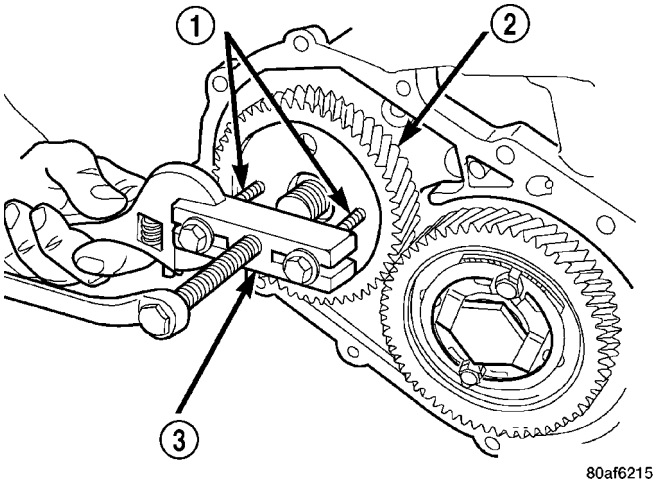

Fig. 54 Remove Transfer Shaft Gear

1 - SPECIAL TOOL L4407-6
2 - TRANSFER SHAFT GEAR
3 - SPECIAL TOOL L4407A

(39) Remove transfer gear shim (select) (Fig. 55).

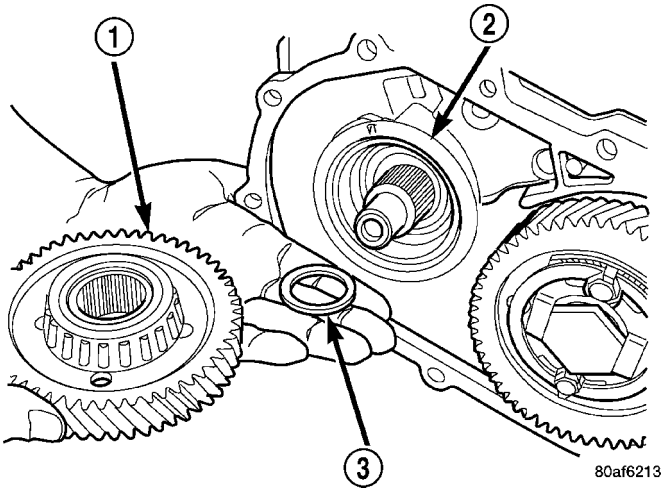

Fig. 55 Remove Transfer Shaft Gear and (Select) Shim

1 - TRANSFER SHAFT GEAR
2 - BEARING CUP RETAINER
3 - SHIM (SELECT)

(40) Remove bearing cup retainer (Fig. 56).

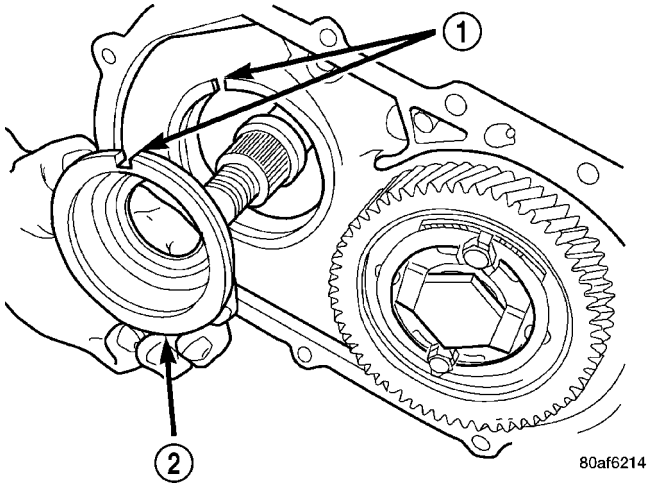

Fig. 56 Remove Bearing Cup Retainer

1 - ALIGN INDEXING TAB TO SLOT
2 - BEARING CUP RETAINER

(41) Remove transfer gear bearing cone using setup shown in (Fig. 57).

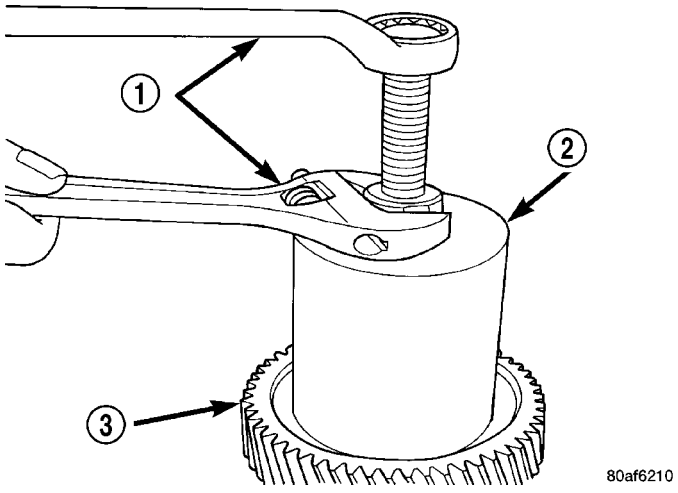

Fig. 57 Remove Transfer Gear Bearing Cone

1 - WRENCHES
2 - TOOL 5048 WITH JAWS TOOL 5048–4 AND BUTTON TOOL L-4539–2
3 - TRANSFER SHAFT GEAR

40TE AUTOMATIC TRANSAXLE (Continued)

(42) Remove transfer shaft bearing cup from retainer using Tool 6062 (Fig. 58).

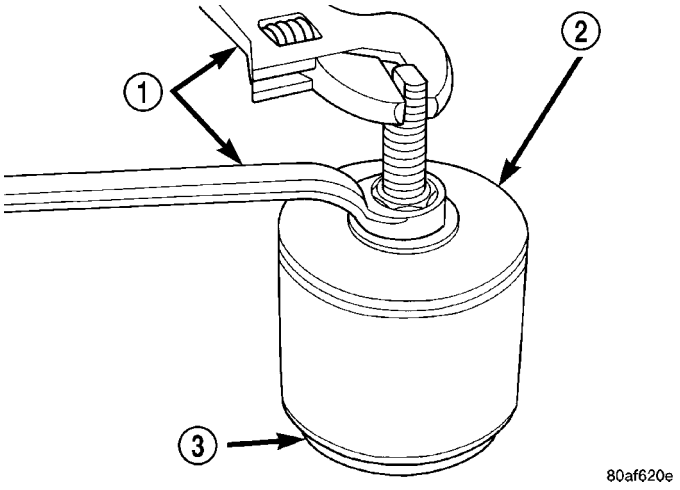

Fig. 58 Remove Transfer Shaft Bearing Cup

1 - WRENCHES
2 - TOOL 6062
3 - TRANSFER SHAFT BEARING CUP RETAINER

(43) Using Tool 6051, remove transfer shaft bearing snap ring (Fig. 59).

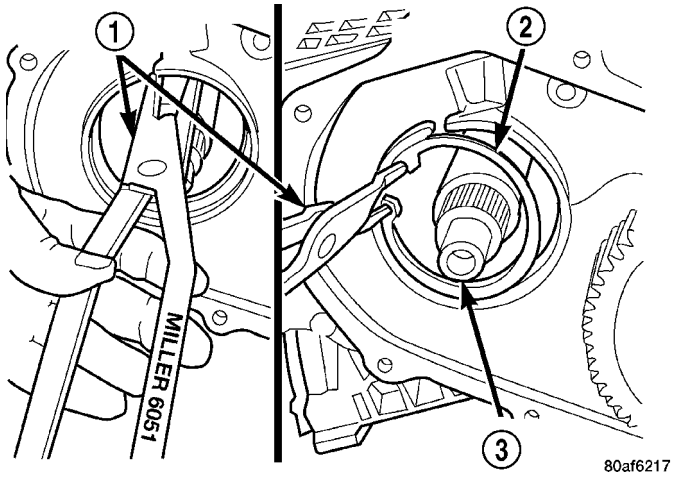

Fig. 59 Remove Transfer Shaft Bearing Snap Ring

1 - SNAP RING PLIERS TOOL 6051
2 - TRANSFER SHAFT BEARING SNAP RING
3 - TRANSFER SHAFT

(44) Using tool 5049A, remove transfer shaft from transaxle (Fig. 60).

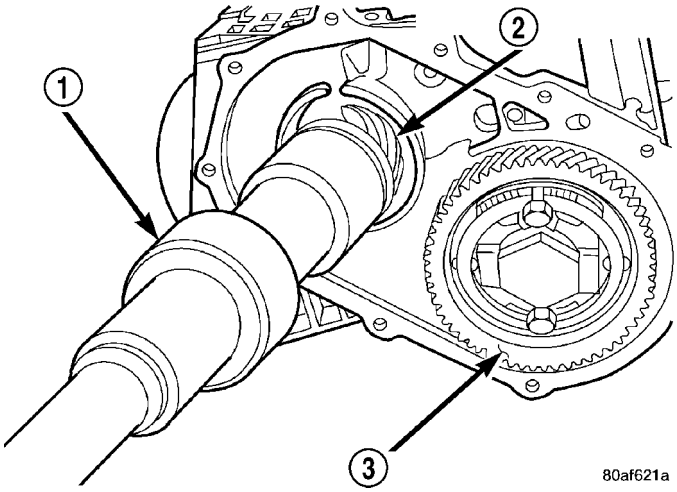

Fig. 60 Remove Transfer Shaft

1 - SPECIAL TOOL 5049–A
2 - TRANSFER SHAFT
3 - OUTPUT GEAR

(45) Slip bearing cup retainer and oil baffle off of shaft (Fig. 61).

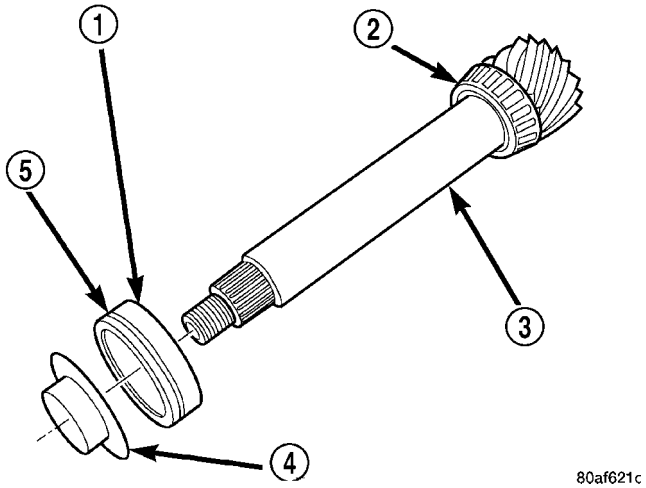

Fig. 61 Bearing Cup Removed

1 - BEARING CUP
2 - BEARING CONE
3 - TRANSFER SHAFT
4 - OIL BAFFLE
5 - O-RING

40TE AUTOMATIC TRANSAXLE (Continued)

(46) Using tool P-334, press transfer shaft bearing cone off of shaft (Fig. 62).

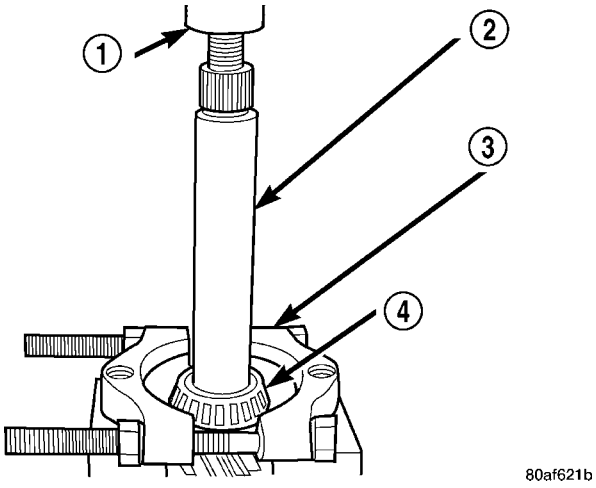

Fig. 62 Remove Transfer Shaft Bearing Cone

1 - ARBOR PRESS RAM
2 - TRANSFER SHAFT
3 - TOOL P-334
4 - BEARING CONE

(47) Bend output gear retaining strap ears flat to allow bolt removal.

(48) Remove output shaft stirrup strap bolts (Fig. 63).

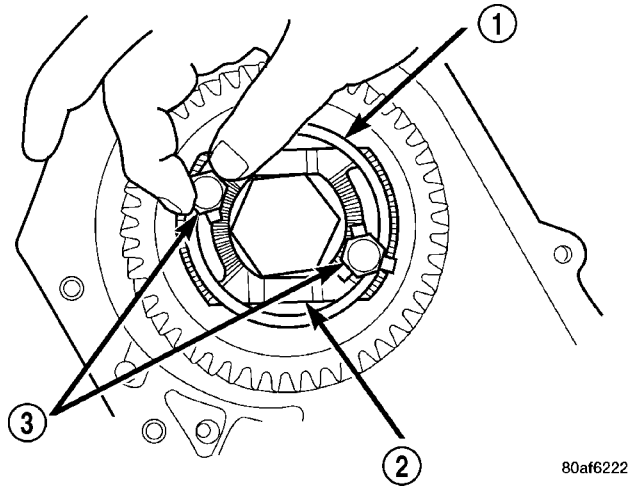

Fig. 63 Remove Strap Bolts

1 - RETAINING STRAP
2 - STIRRUP
3 - RETAINING STRAP BOLTS

(49) Remove stirrup and strap (Fig. 64).

(50) Using Tool 6259 (Fig. 65), remove output shaft gear-to-shaft bolt and washer (Fig. 66).

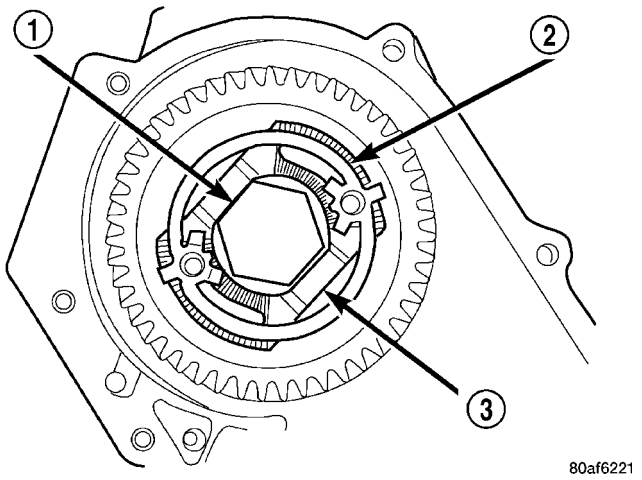

Fig. 64 Remove Stirrup Strap

1 - OUTPUT GEARBOLT
2 - RETAINING STRAP
3 - STIRRUP

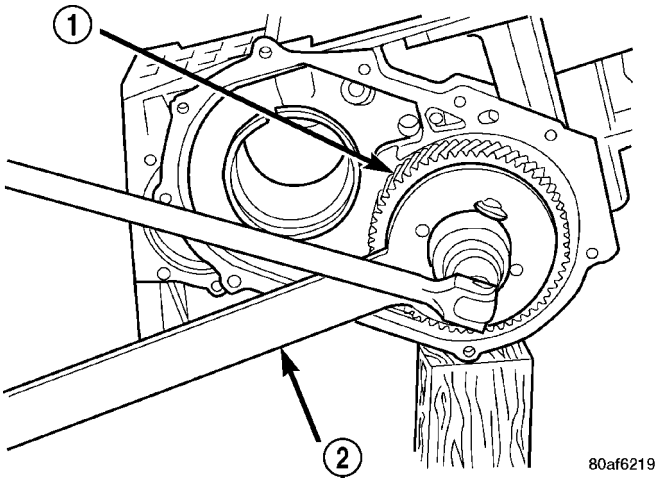

Fig. 65 Remove Output Gear Bolt

1 - OUTPUT GEAR
2 - TOOL 6259

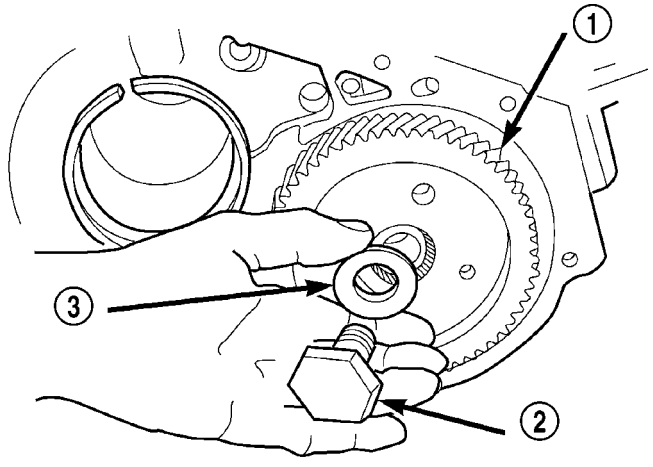

Fig. 66 Output Gear Bolt and Washer

1 - OUTPUT GEAR
2 - BOLT
3 - CONED LOCK WASHER

40TE AUTOMATIC TRANSAXLE (Continued)

(51) Using Tool L4407A, and button 6055, remove output gear from shaft (Fig. 67).

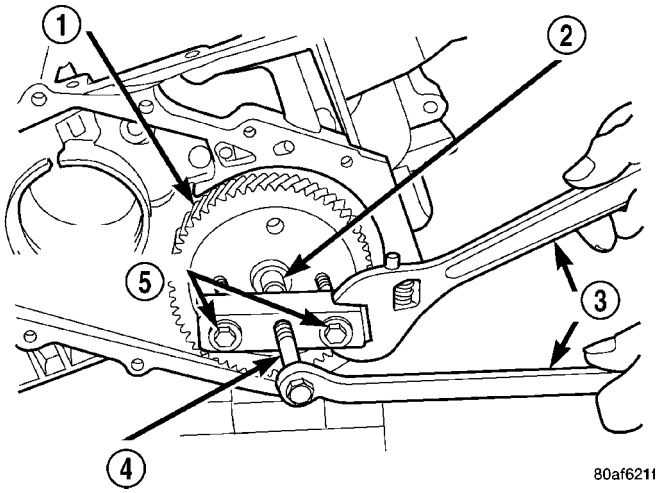

Fig. 67 Remove Output Gear

1 - OUTPUT GEAR
2 - BUTTON TOOL 6055
3 - WRENCHES
4 - TOOL L4407A
5 - BOLTS TOOL L4407–6

(52) Remove output gear bearing shim (select) (Fig. 68).

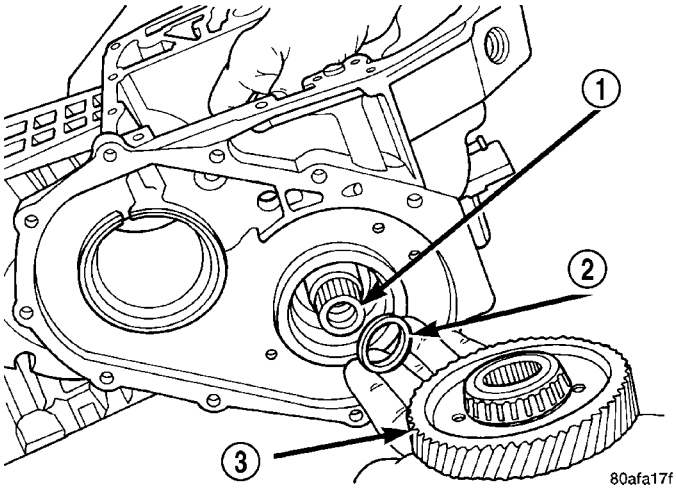

Fig. 68 Output Gear and (Select) Shim

1 - REAR CARRIER ASSEMBLY
2 - SHIM (SELECT)
3 - OUTPUT GEAR

(53) Using setup as shown in (Fig. 69), remove output gear bearing cone.

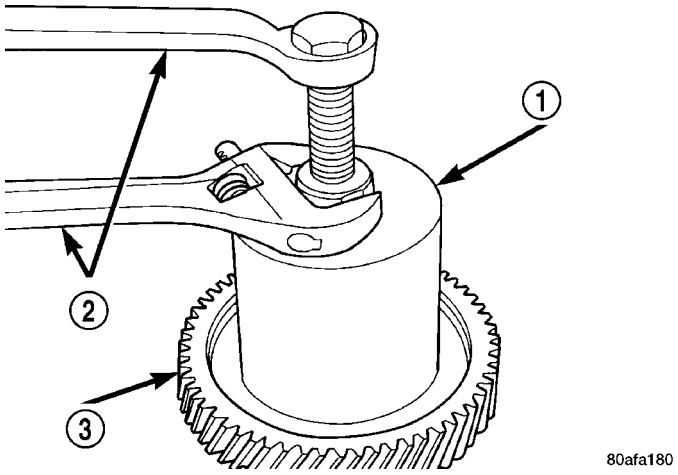

Fig. 69 Remove Bearing Cone

1 - TOOL 5048 WITH JAWS 5048–5 AND BUTTON L-4539–2
2 - WRENCHES
3 - OUTPUT GEAR

(54) Remove rear carrier assembly from transaxle (Fig. 70).

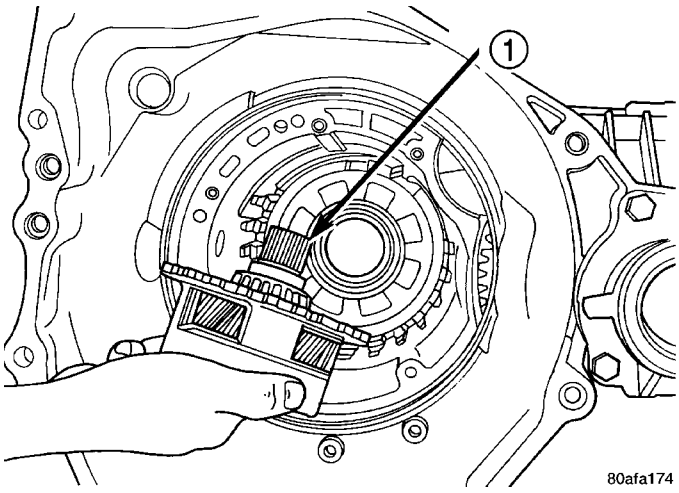

Fig. 70 Remove Rear Carrier Assembly

1 - REAR CARRIER ASSEMBLY

40TE AUTOMATIC TRANSAXLE (Continued)

(55) Remove rear carrier assembly bearing cone using setup shown in (Fig. 71).

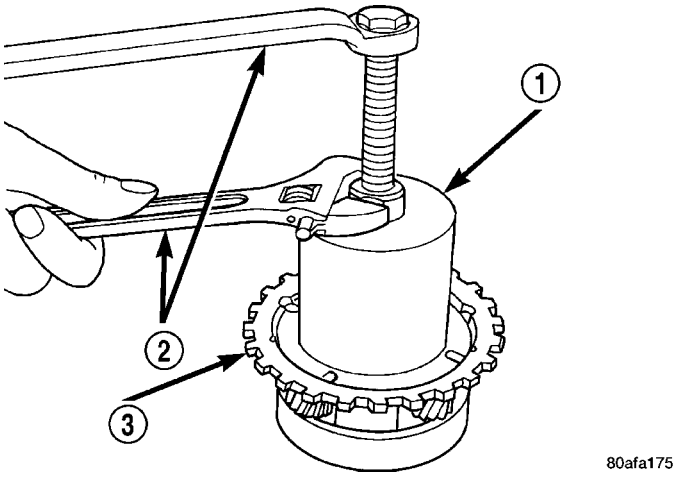

Fig. 71 Remove Rear Carrier Bearing Cone

1 - TOOL 5048 WITH JAWS 5048–3 AND BUTTON 6055
2 - WRENCHES
3 - REAR CARRIER ASSEMBLY

(56) Install low/reverse spring compressor tool as shown in (Fig. 72) (Fig. 73).

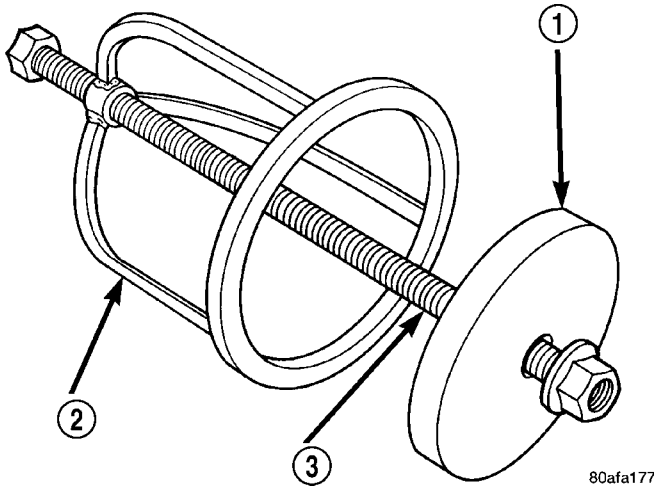

Fig. 72 Low/Reverse Spring Compressor Tool

1 - TOOL 6057
2 - TOOL 5059
3 - TOOL 5058–3

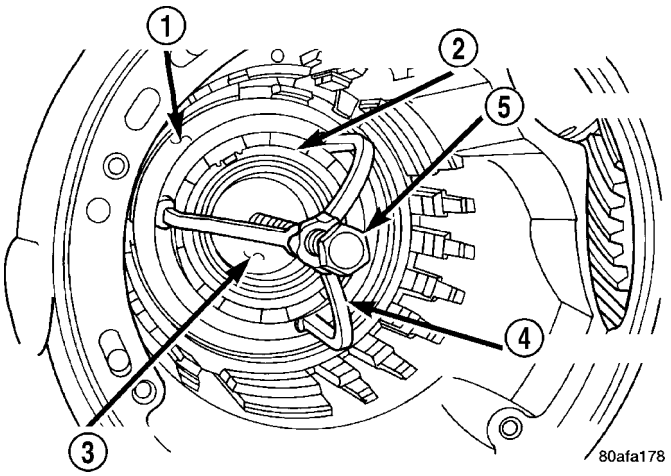

Fig. 73 Compressor Tool in Use

1 - LOW/REVERSE CLUTCH RETURN SPRING
2 - SNAP RING (INSTALL AS SHOWN)
3 - TOOL 6057
4 - TOOL 5059
5 - TOOL 5058–3

(57) Compress low/reverse piston return spring and remove snap ring (Fig. 74).

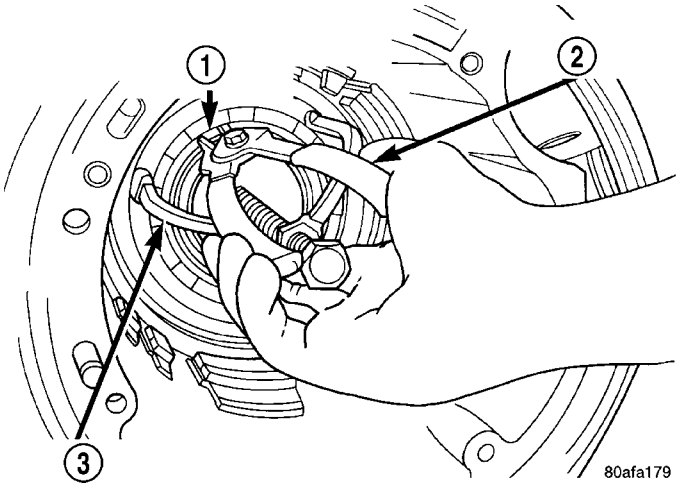

Fig. 74 Install Snap Ring

1 - SNAP RING OPENING MUST BE BETWEEN SPRING LEVERS (AS SHOWN)
2 - SNAP RING PLIERS
3 - TOOL 6057

40TE AUTOMATIC TRANSAXLE (Continued)

(58) Remove low/reverse spring compressor tool and low reverse piston return spring (Fig. 75).

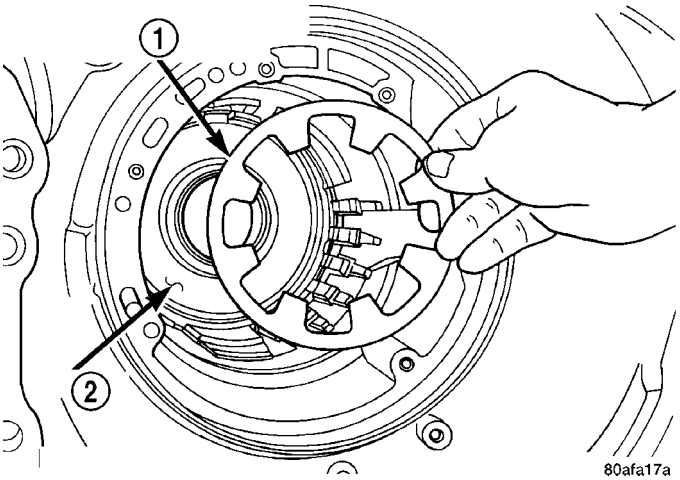

Fig. 75 Low/Reverse Piston

1 - LOW/REVERSE PISTON RETURN SPRING
2 - PISTON

(59) Using a suitable punch , drive out park guide bracket pivot shaft plug (Fig. 76).

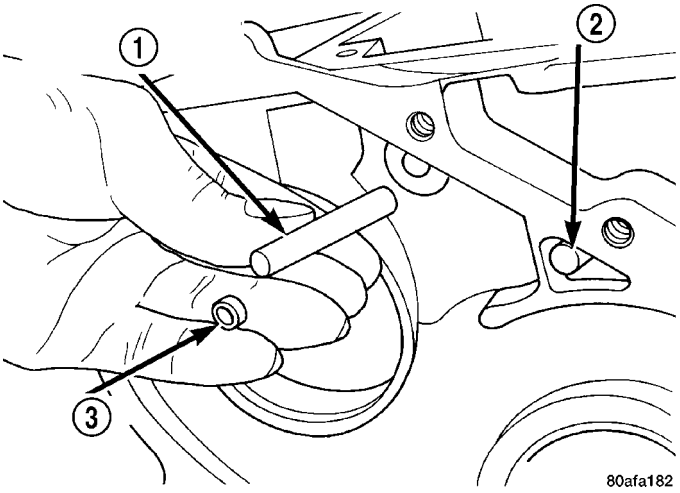

Fig. 76 Remove Anchor Shaft and Plug

1 - GUIDE BRACKET ANCHOR SHAFT
2 - PIVOT SHAFT
3 - ANCHOR SHAFT PLUG

(60) Using ordinary pliers, remove pivot shaft and guide bracket assembly (Fig. 77).

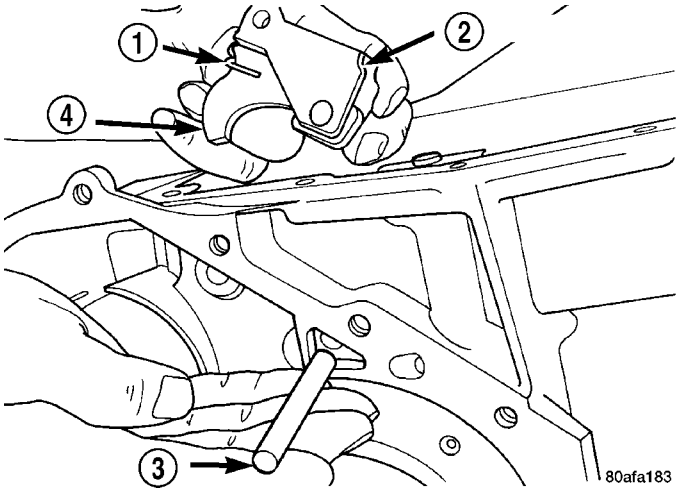

Fig. 77 Pivot Shaft and Guide Bracket

1 - ANTIRACHET SPRING
2 - GUIDE BRACKET
3 - PIVOT SHAFT
4 - PAWL

(61) Inspect guide bracket components for excessive wear and replace if necessary (Fig. 78).

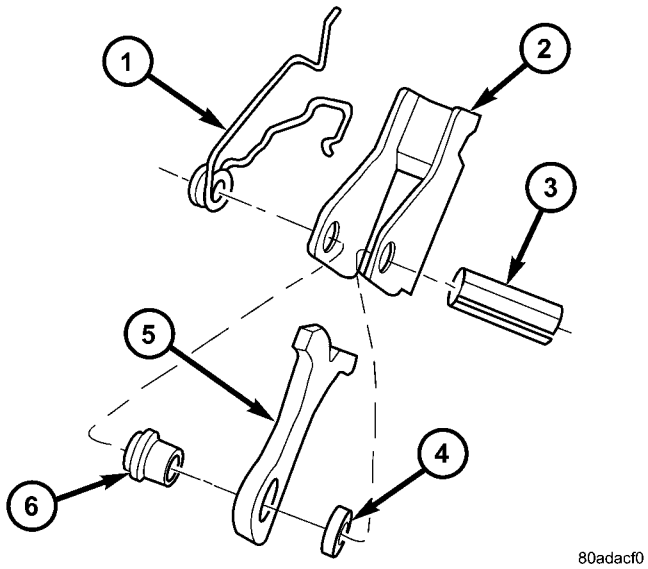

Fig. 78 Guide Bracket Disassembled

1 - ANTIRATCHET SPRING
2 - GUIDE BRACKET
3 - SPLIT SLEEVE
4 - SPACER
5 - PAWL
6 - STEPPED SPACER

40TE AUTOMATIC TRANSAXLE (Continued)

NOTE: The Low/Reverse Clutch Piston has bonded seals which are not individually serviceable. Seal replacement requires replacement of the piston assembly.

(62) Remove low/reverse clutch piston (Fig. 79).

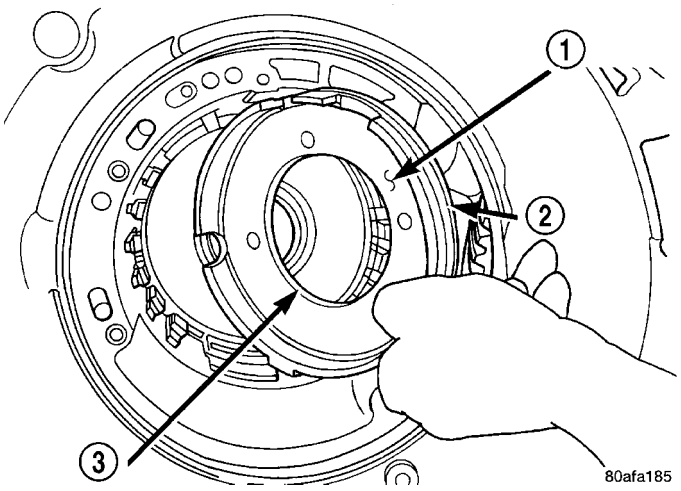

Fig. 79 Remove Low/Reverse Clutch Piston

1 - LOW/REVERSE CLUTCH PISTON
2 - BONDED SEAL
3 - BONDED SEAL

(63) Remove low/reverse piston retainer-to-case screws (Fig. 80).

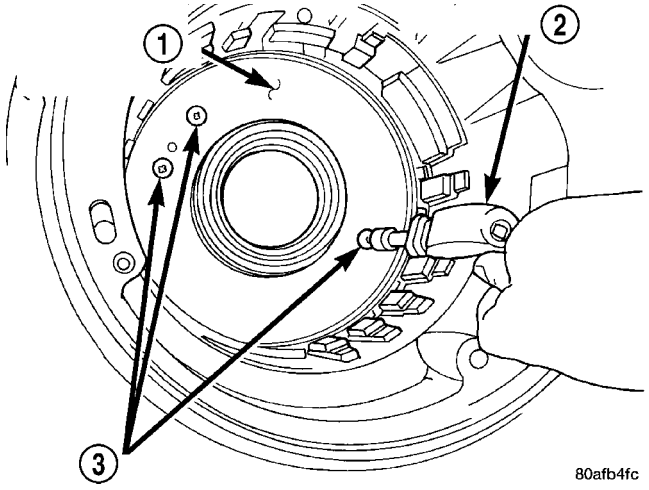

Fig. 80 Remove Piston Retainer-to-Case Screws

1 - LOW/REVERSE CLUTCH PISTON RETAINER
2 - SCREWDRIVER
3 - TORX-LOC SCREWS

(64) Remove low/reverse piston retainer (Fig. 81).

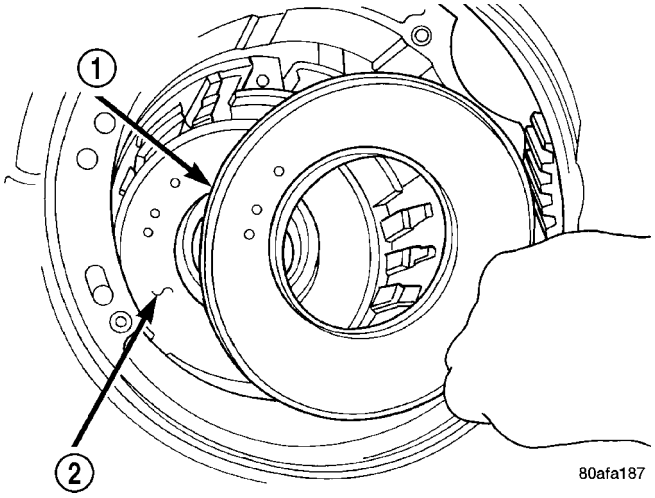

Fig. 81 Remove Piston Retainer

1 - LOW/REVERSE CLUTCH PISTON RETAINER
2 - GASKET

(65) Remove low/reverse piston retainer-to-case gasket (Fig. 82).

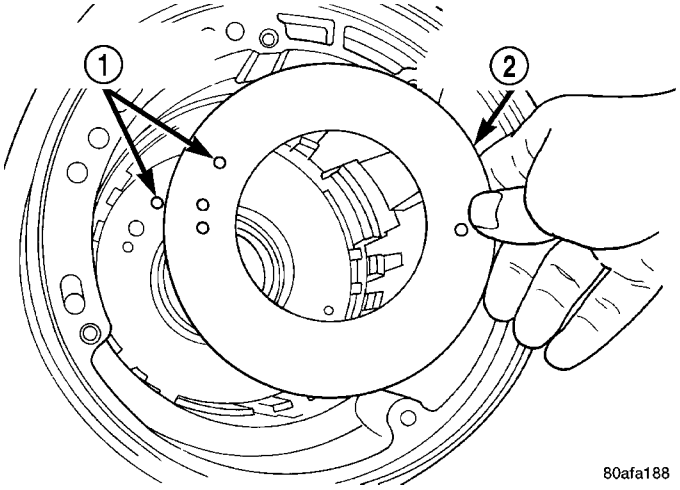

Fig. 82 Remove Piston Retainer Gasket

1 - GASKET HOLES MUST LINE UP
2 - LOW/REVERSE CLUTCH PISTON RETAINER GASKET

40TE AUTOMATIC TRANSAXLE (Continued)

(66) Using a hammer and suitable drift, drive out inner output bearing cup (Fig. 83).

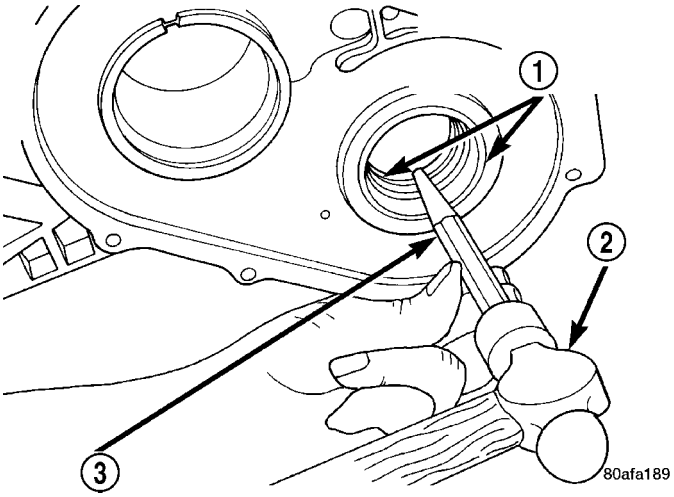

Fig. 83 Remove Output Bearing Inner Cup

1 - OUTPUT BEARING CUPS (REPLACE IN PAIRS)
2 - HAMMER
3 - BRASS DRIFT

(67) Using tool 6062, remove outer output bearing cup (Fig. 84).

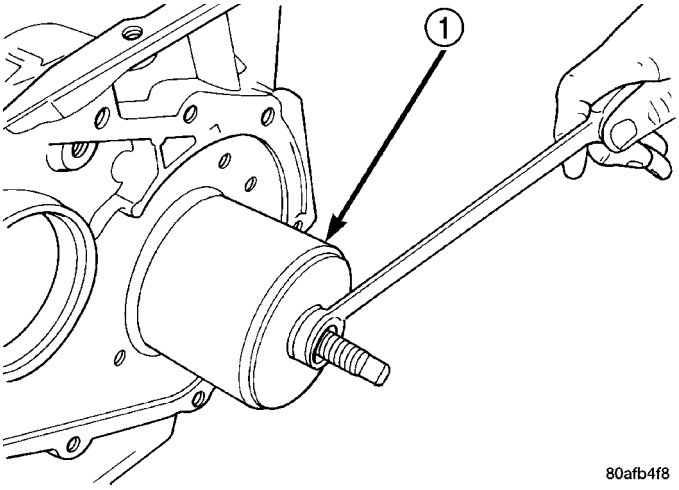

Fig. 84 Remove Output Bearing Outer

1 - TOOL 6062

ASSEMBLY

CAUTION: The cooler bypass valve must be replaced if transaxle failure has occurred. Do not attempt to reuse or clean old valve.

NOTE: If transaxle is being overhauled (clutch and/or seal replacement), the TCM/PCM Quick Learn procedure must be performed. (Refer to 8 - ELECTRICAL/ELECTRONIC CONTROL MODULES/TRANSMISSION CONTROL MODULE - STANDARD PROCEDURE)

(1) Install both output bearing cups using Tool 5050 (Fig. 85).

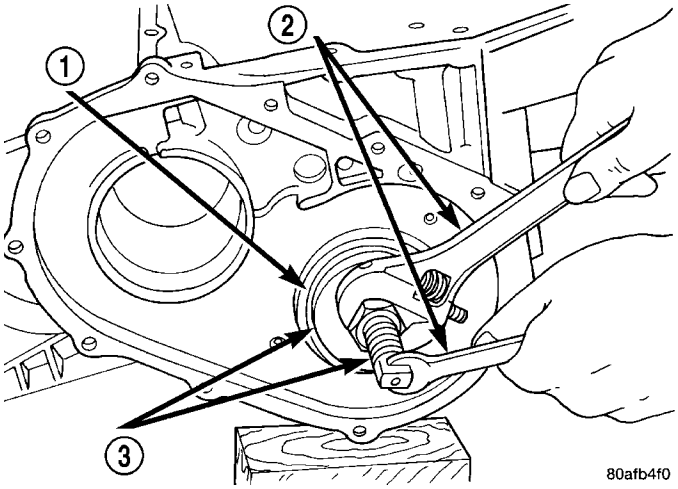

Fig. 85 Install Both Output Bearing Cups

1 - OUTPUT BEARING CUPS
2 - WRENCHES
3 - TOOL 5050

(2) Install low/reverse piston retainer gasket (Fig. 86). Make sure gasket holes line up with case.

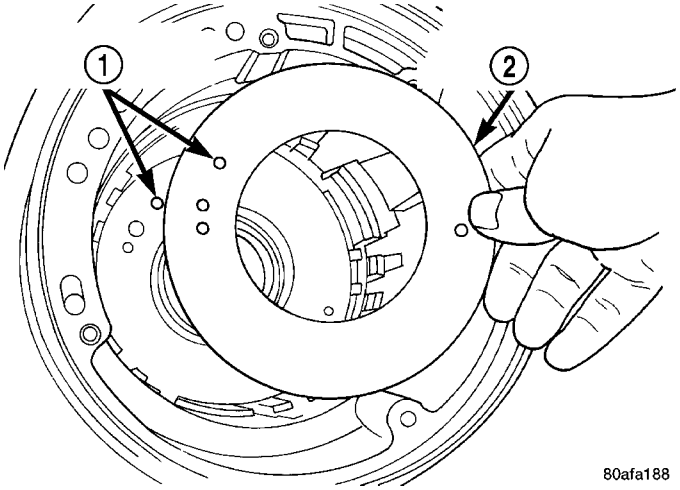

Fig. 86 Install Piston Retainer Gasket

1 - GASKET HOLES MUST LINE UP
2 - LOW/REVERSE CLUTCH PISTON RETAINER GASKET

40TE AUTOMATIC TRANSAXLE (Continued)

(3) Install low/reverse piston retainer (Fig. 87).

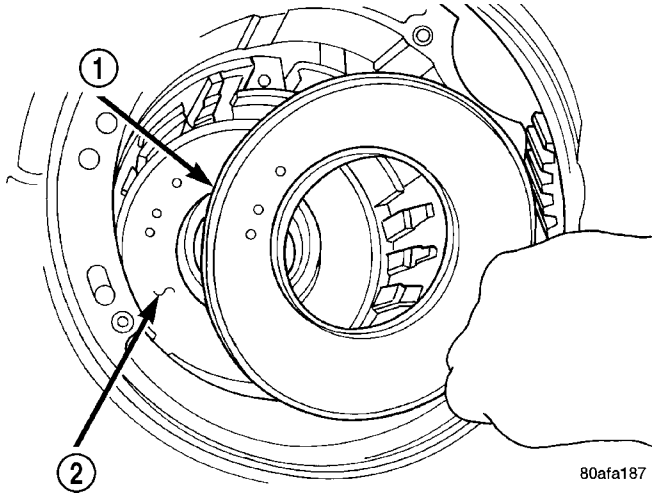

Fig. 87 Install Piston Retainer

1 - LOW/REVERSE CLUTCH PISTON RETAINER
2 - GASKET

(4) Install low/reverse piston retainer-to-case bolts (Fig. 88) and torque to 5 N·m (45 in. lbs.).

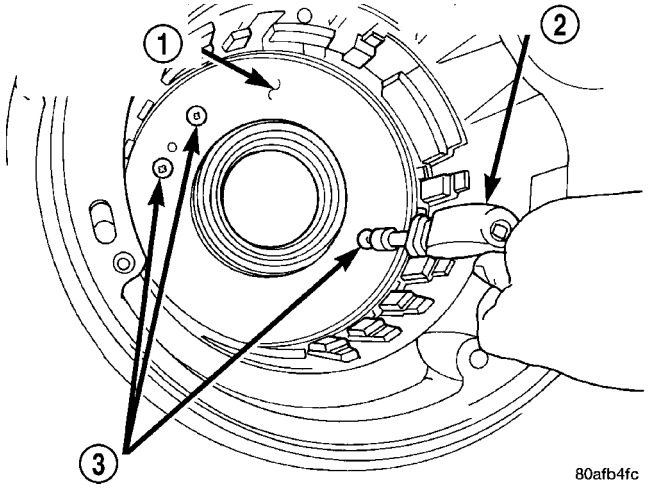

Fig. 88 Install Piston Retainer-to-Case Screws

1 - LOW/REVERSE CLUTCH PISTON RETAINER
2 - SCREWDRIVER
3 - TORX-LOC SCREWS

NOTE: The Low/Reverse Clutch Piston has bonded seals which are not individually serviceable. Seal replacement requires replacement of the piston assembly.

(5) Install low/reverse clutch piston (Fig. 89).

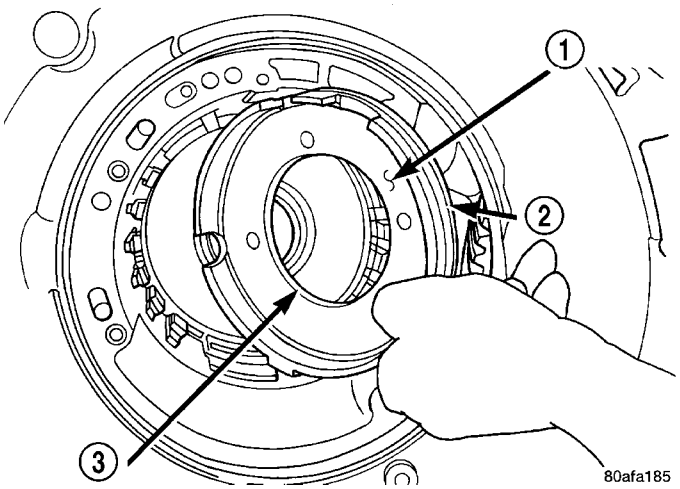

Fig. 89 Install Low/Reverse Clutch Piston

1 - LOW/REVERSE CLUTCH PISTON
2 - BONDED SEAL
3 - BONDED SEAL

(6) Assemble park guide bracket assembly (Fig. 91) (Fig. 90).

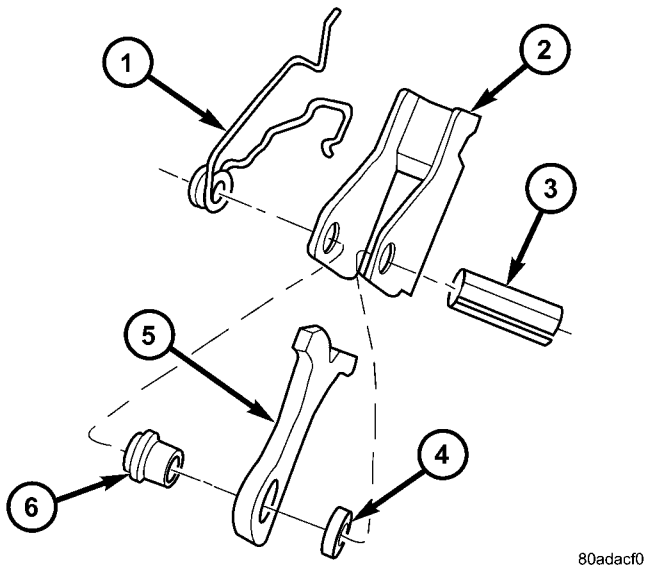

Fig. 90 Guide Bracket Disassembled

1 - ANTIRATCHET SPRING
2 - GUIDE BRACKET
3 - SPLIT SLEEVE
4 - SPACER
5 - PAWL
6 - STEPPED SPACER

40TE AUTOMATIC TRANSAXLE (Continued)

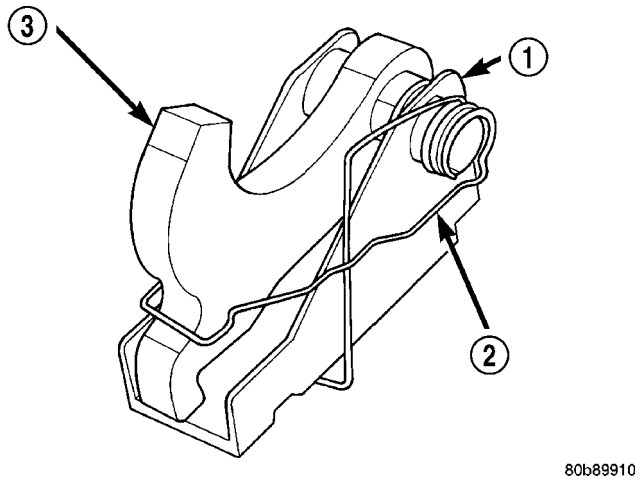

Fig. 91 Guide Bracket

1 - GUIDE BRACKET
2 - ANTIRATCHET SPRING (MUST BE ASSEMBLED AS SHOWN)
3 - PAWL

(7) Install guide bracket into position and insert pivot shaft (Fig. 92).

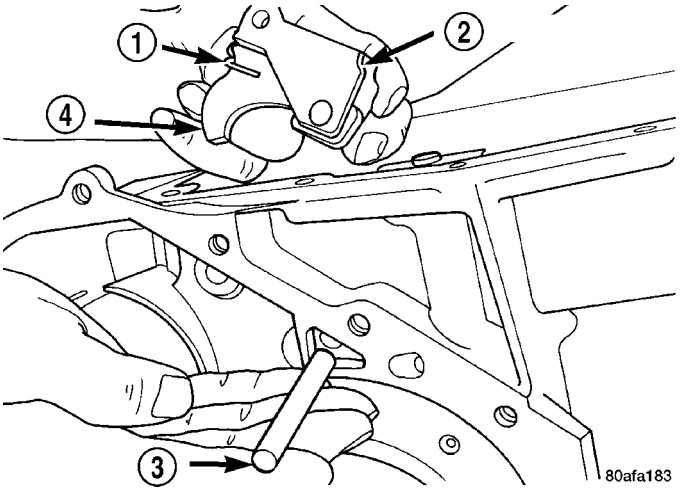

Fig. 92 Pivot Shaft and Guide Bracket

1 - ANTIRACHET SPRING
2 - GUIDE BRACKET
3 - PIVOT SHAFT
4 - PAWL

(8) Install anchor shaft and plug (Fig. 93). Make sure guide bracket and split sleeve are in contact with the rear of the transaxle case.

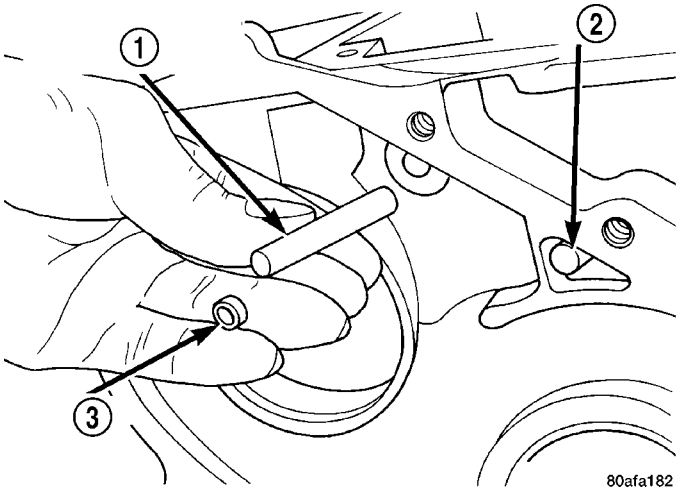

Fig. 93 Install Anchor Shaft and Plug

1 - GUIDE BRACKET ANCHOR SHAFT
2 - PIVOT SHAFT
3 - ANCHOR SHAFT PLUG

(9) Install low/reverse piston return spring (Fig. 94).

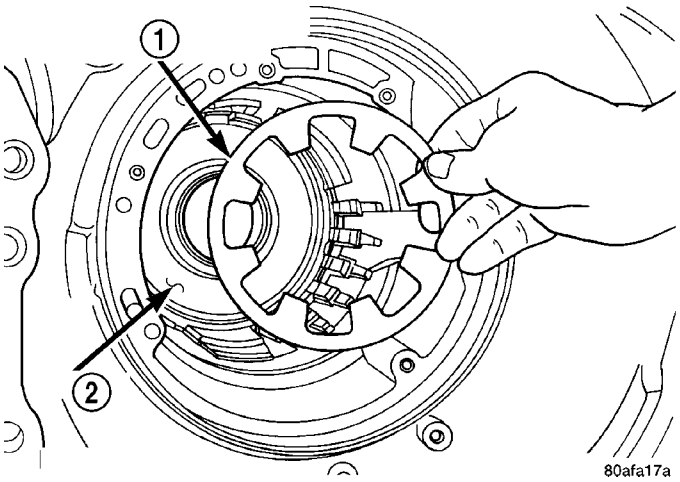

Fig. 94 Low/Reverse Piston Return Spring

1 - LOW/REVERSE PISTON RETURN SPRING
2 - PISTON

40TE AUTOMATIC TRANSAXLE (Continued)

(10) Install low/reverse spring compressor into position (Fig. 95). Compress low/reverse piston and install snap ring as shown in (Fig. 96).

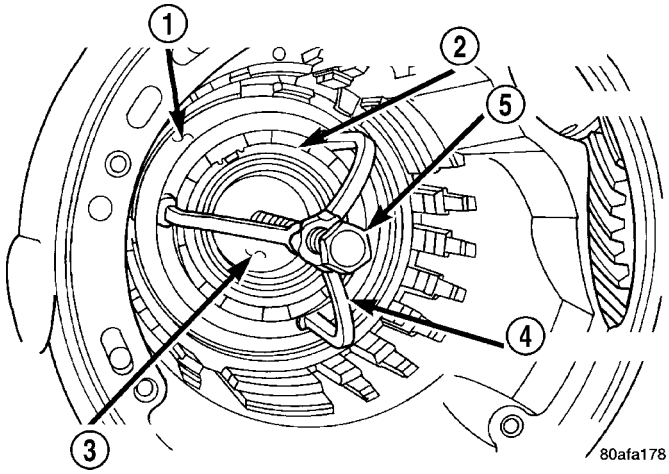

Fig. 95 Compressor Tool in Use

1 - LOW/REVERSE CLUTCH RETURN SPRING
2 - SNAP RING (INSTALL AS SHOWN)
3 - TOOL 6057
4 - TOOL 5059
5 - TOOL 5058–3

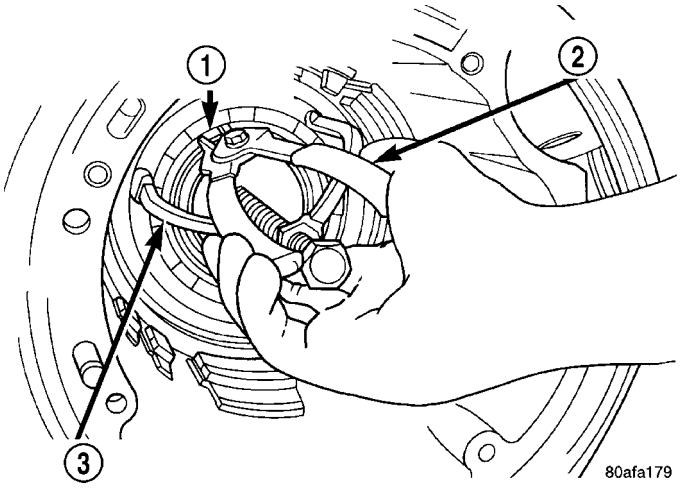

Fig. 96 Install Snap Ring

1 - SNAP RING OPENING MUST BE BETWEEN SPRING LEVERS (AS SHOWN)
2 - SNAP RING PLIERS
3 - TOOL 6057

(11) Install rear carrier bearing cone using Tool 6053 (Fig. 97).

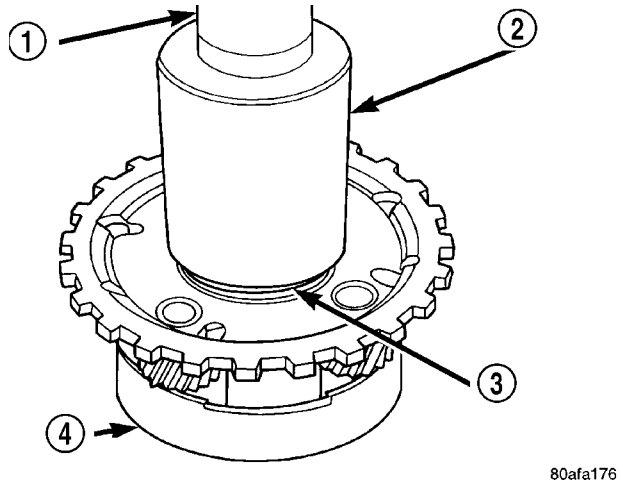

Fig. 97 Install Rear Carrier Bearing Cone

1 - ARBOR PRESS RAM
2 - TOOL 6053
3 - NEW BEARING CONE
4 - REAR CARRIER ASSEMBLY

(12) Install rear carrier assembly to transaxle case (Fig. 98).

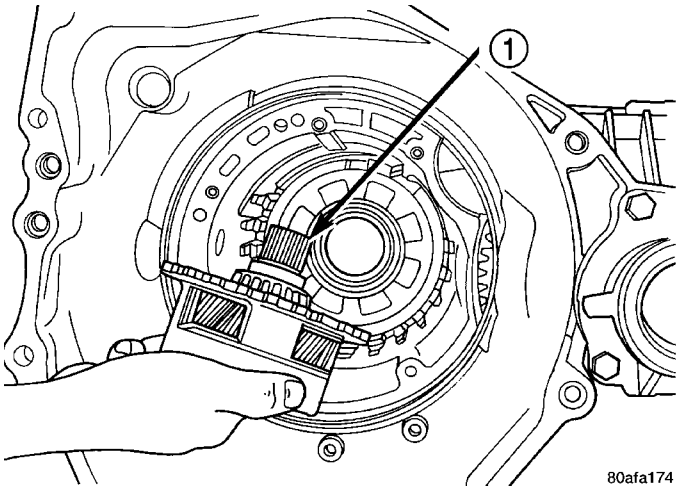

Fig. 98 Install Rear Carrier Assembly

1 - REAR CARRIER ASSEMBLY

40TE AUTOMATIC TRANSAXLE (Continued)

(13) Install output gear bearing cone using Tool 5052 (Fig. 99).

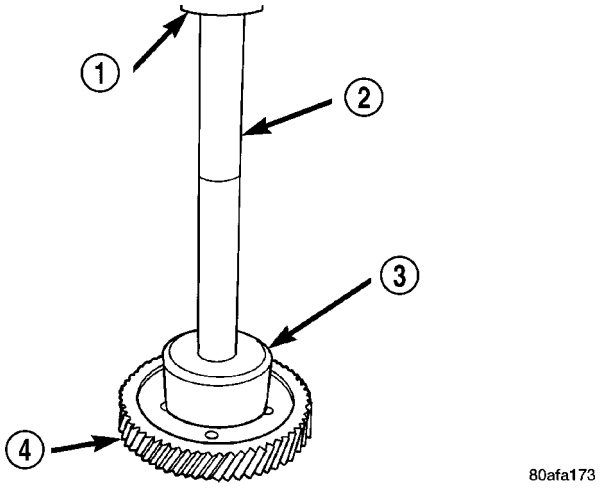

Fig. 99 Install Output Gear Bearing Cone

1 - ARBOR PRESS RAM
2 - HANDLE C-4171
3 - TOOL 5052
4 - OUTPUT GEAR

(14) **OUTPUT GEAR BEARING ADJUSTMENT:**

(a) With output gear Installd, install a 4.50 mm (0.177 in.) gauging shim (Fig. 101) on the rear carrier assembly hub, using grease to hold the shim in place.

(b) Using Tool 6259, install output gear and bearing assembly. Torque to 271 N·m (200 ft. lbs.).

(c) Measure bearing end play. Attach Tool L-4432 to the gear (Fig. 100).

(d) Push and pull the gear while rotating back and forth to ensure seating of bearing rollers.

(e) Using a dial indicator mounted to the transaxle case, measure output gear end play as shown in (Fig. 100).

(f) Refer to the output gear bearing shim chart for the required shim to obtain proper bearing setting.

(g) Use Tool 6259 to remove the output gear retaining bolt and washer. To remove the output gear, use Tool L4407A.

(h) Remove the gauging shim and install the proper shim determined by the chart. Use grease to hold the shim in place.

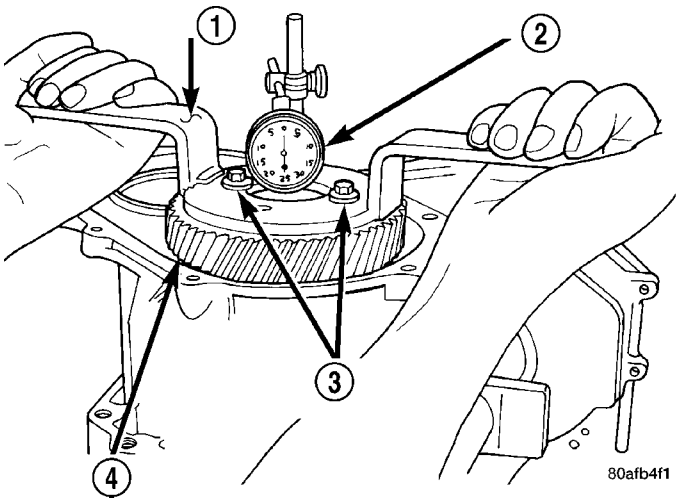

Fig. 100 Checking Output Gear Bearings End Play

1 - TOOL L-4432
2 - DIAL INDICATOR
3 - SPECIAL SCREWS TOOL 6260
4 - OUTPUT GEAR

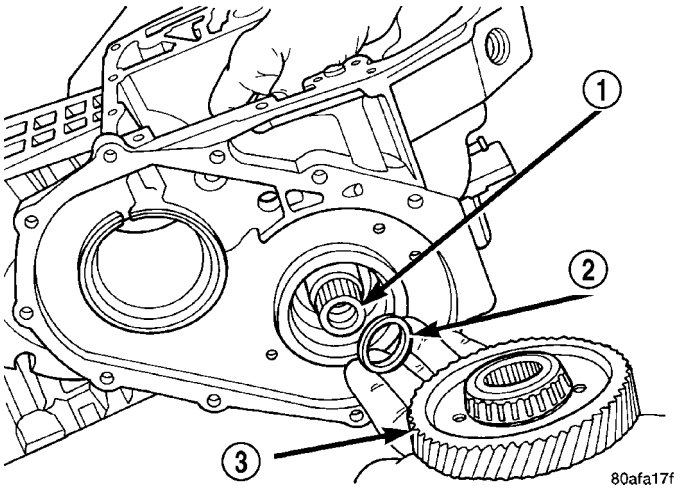

Fig. 101 Output Gear and (Select) Shim

1 - REAR CARRIER ASSEMBLY
2 - SHIM (SELECT)
3 - OUTPUT GEAR

40TE AUTOMATIC TRANSAXLE (Continued)

OUTPUT GEAR BEARING SHIM CHART

End Play	Shim Needed	Part Number	End Play	Shim Needed	Part Number
0.05mm (0.002 in.)	4.42mm (0.174 in.)	4412830AB	0.53mm (0.021 in.)	3.94mm (0.155 in.)	4412818AB
0.08mm (0.003 in.)	4.38mm (0.172 in.)	4412829AB	0.56mm (0.022 in.)	3.90mm (0.154 in.)	4412817AB
0.10mm (0.004 in.)	4.38mm (0.172 in.)	4412829AB	0.58mm (0.023 in.)	3.90mm (0.154 in.)	4412817AB
0.13mm (0.005 in.)	4.34mm (0.171 in.)	4412828AB	0.61mm (0.024 in.)	3.86mm (0.152 in.)	4412816AB
0.15mm (0.006 in.)	4.30mm (0.169 in.)	4412827AB	0.64mm (0.025 in.)	3.82mm (0.150 in.)	4412815AB
0.18mm (0.007 in.)	4.30mm (0.169 in.)	4412827AB	0.66mm (0.026 in.)	3.82mm (0.150 in.)	4412815AB
0.20mm (0.008 in.)	4.26mm (0.168 in.)	4412826AB	0.69mm (0.027 in.)	3.78mm (0.149 in.)	4412814AB
0.23mm (0.009 in.)	4.22mm (0.166 in.)	4412825AB	0.71mm (0.028 in.)	3.74mm (0.147 in.)	4412813AB
0.25mm (0.010 in.)	4.22mm (0.166 in.)	4412825AB	0.74mm (0.029 in.)	3.74mm (0.147 in.)	4412813AB
0.28mm (0.011 in.)	4.18mm (0.165 in.)	4412824AB	0.76mm (0.030 in.)	3.70mm (0.146 in.)	4412812AB
0.30mm (0.012 in.)	4.14mm (0.163 in.)	4412823AB	0.79mm (0.031 in.)	3.66mm (0.144 in.)	4412811AB
0.33mm (0.013 in.)	4.14mm (0.163 in.)	4412823AB	0.81mm (0.032 in.)	3.66mm (0.144 in.)	4412811AB
0.36mm (0.014 in.)	4.10mm (0.161 in.)	4412822AB	0.84mm (0.033 in.)	3.62mm (0.143 in.)	4412810AB
0.38mm (0.015 in.)	4.10mm (0.161 in.)	4412822AB	0.86mm (0.034 in.)	3.62mm (0.143 in.)	4412810AB
0.41mm (0.016 in.)	4.06mm (0.160 in.)	4412821AB	0.89mm (0.035 in.)	3.58mm (0.141)	4412809AB
0.43mm (0.017 in.)	4.02mm (0.158 in.)	4412820AB	0.91mm (0.036in.)	3.54mm (0.139 in.)	4412808AB
0.46mm (0.018 in.)	4.02mm (0.158 in.)	4412820AB	0.94mm (0.037 in.)	3.54mm (0.139 in.)	4412808AB
0.48mm (0.019 in.)	3.98mm (0.157 in.)	4412819AB	0.97mm (0.038 in.)	3.50mm (0.138 in.)	4412807AB
0.51mm (0.020 in.)	3.94mm (0.155 in.)	4412818AB			

40TE AUTOMATIC TRANSAXLE (Continued)

(15) Install the output gear and bearing assembly using Tool 6261 (Fig. 102).

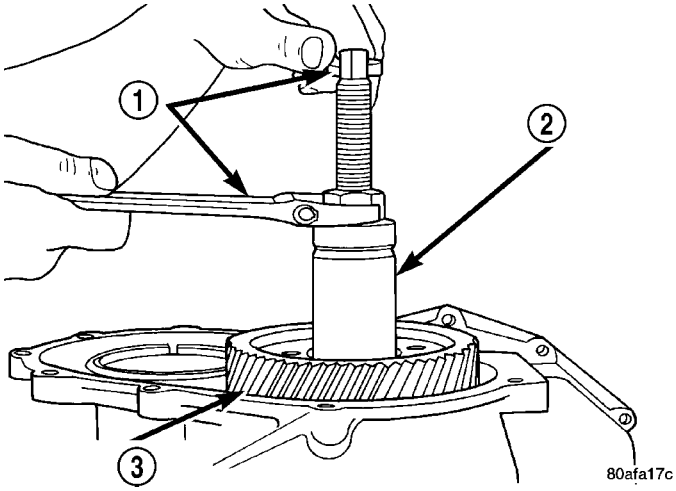

Fig. 102 Install Output Gear

1 - WRENCHES
2 - TOOL 6261 WITH STUD
3 - OUTPUT GEAR

(16) Install NEW output gear retaining bolt and washer (Fig. 103). Using Tool 6259, torque output gear retaining bolt to 271 N·m (200 ft. lbs.) (Fig. 104).

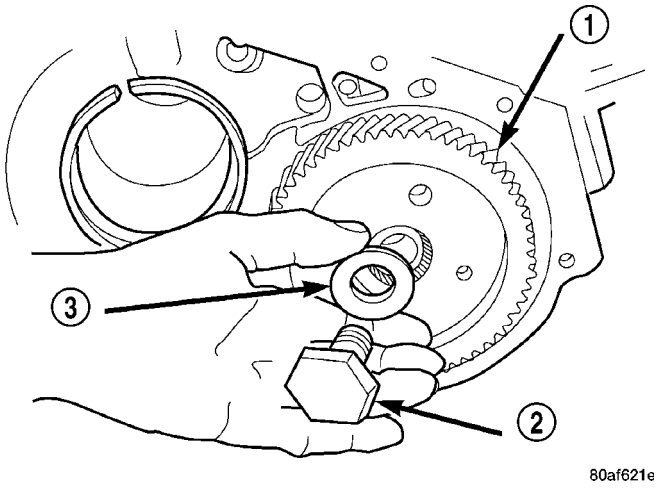

Fig. 103 Output Gear Bolt and Washer

1 - OUTPUT GEAR
2 - BOLT
3 - CONED LOCK WASHER

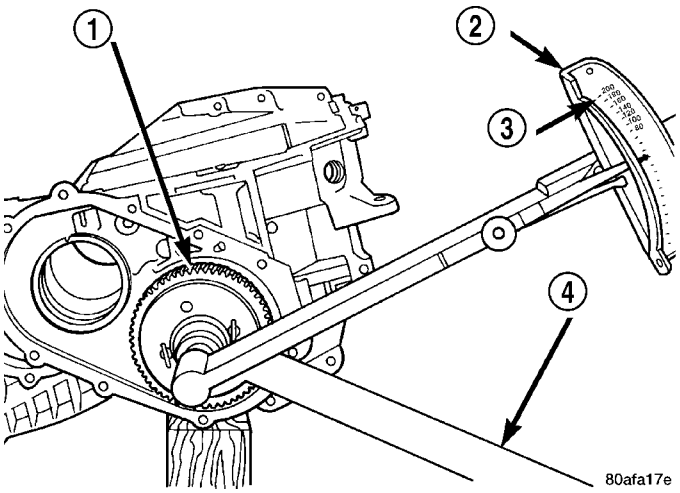

Fig. 104 Tighten Output Gear to 271 N•m (200 ft. lbs.)

1 - OUTPUT GEAR
2 - TORQUE WRENCH
3 - 200 FT. LBS.
4 - TOOL 6259

(17) Using an inch pound torque wrench (Fig. 105), check output shaft turning torque. **Output shaft turning torque should be within 3-8 in. lbs.** If the turning torque is too high, install a 0.04 mm (0.0016 in.) thicker shim. If the turning torque is too low, install a 0.04 mm (0.0016 in.) thinner shim. Repeat until the proper turning torque of 3-8 in. lbs. is obtained.

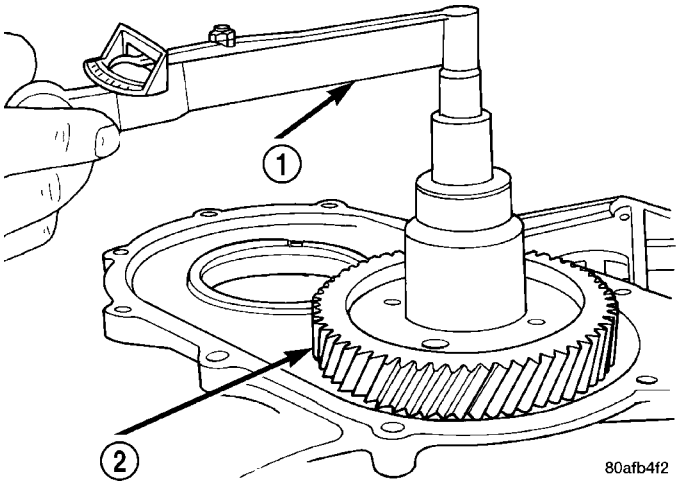

Fig. 105 Check Output Gear Bearings Turning Torque

1 - INCH-POUND TORQUE WRENCH
2 - OUTPUT GEAR

40TE AUTOMATIC TRANSAXLE (Continued)

(18) Install output gear stirrup with serrated side out (Fig. 106).

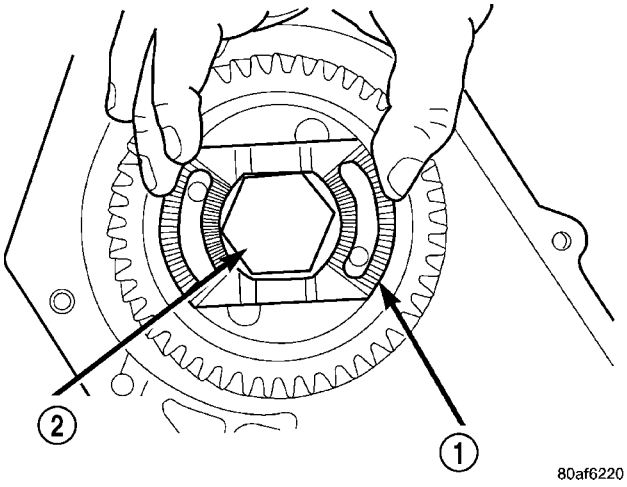

Fig. 106 Install Stirrup

1 - STIRRUP
2 - OUTPUT GEAR RETAINING BOLT

(19) Install retaining strap (Fig. 107).

(20) Install strap bolts but do not tighten at this time (Fig. 107).

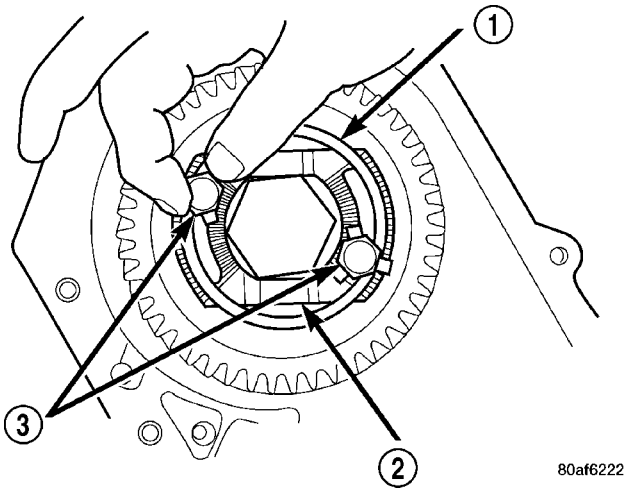

Fig. 107 Install Strap Bolts

1 - RETAINING STRAP
2 - STIRRUP
3 - RETAINING STRAP BOLTS

(21) Rotate stirrup clockwise against flats of retaining bolt (Fig. 108).

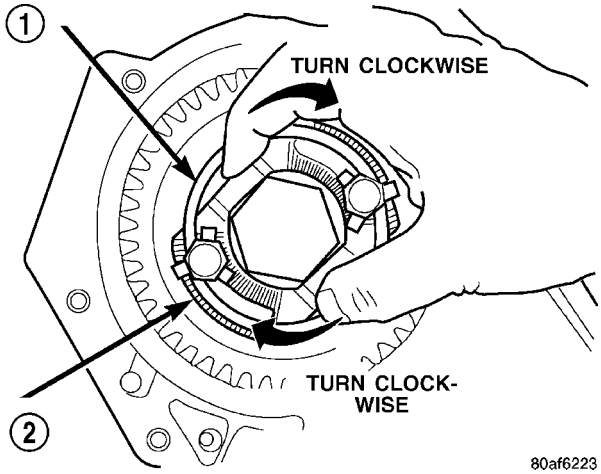

Fig. 108 Turn Stirrup Clockwise Against Flats Of Output Gear Retaining Bolt

1 - RETAINING STRAP
2 - STIRRUP

(22) Torque stirrup strap bolts to 23 N·m (200 in. lbs.) (Fig. 109).

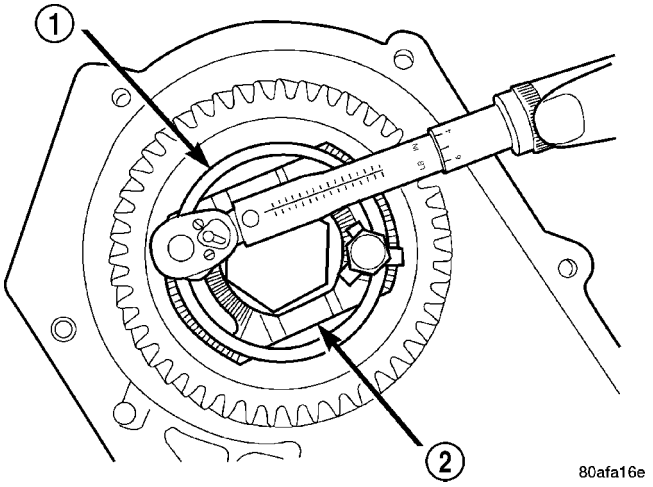

Fig. 109 Tighten Stirrup Strap Bolts to 23 N·m (200 in. lbs.)

1 - RETAINING STRAP
2 - STIRRUP

40TE AUTOMATIC TRANSAXLE (Continued)

(23) Bend tabs on strap up against flats of bolts (Fig. 110).

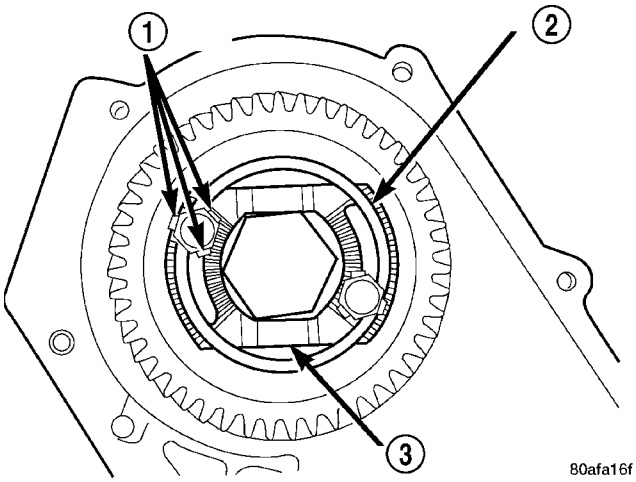

Fig. 110 Bend Tabs On Strap Up Against Flats Of Bolts

1 - RETAINING STRAP TABS
2 - RETAINING STRAP
3 - STIRRUP

(24) Install transfer shaft bearing cone using Tool 6052 (Fig. 111).

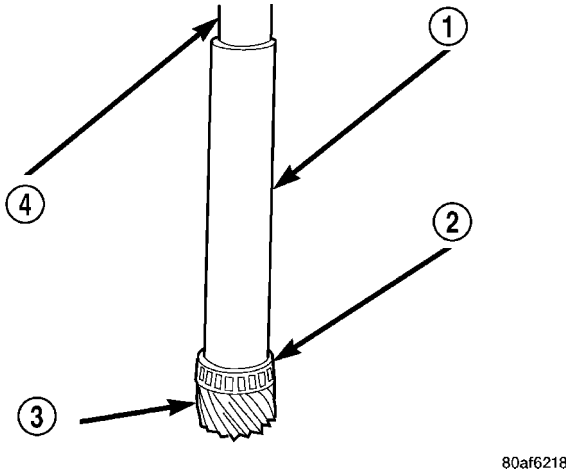

Fig. 111 Install Transfer Shaft Bearing Cone

1 - TOOL 6052
2 - NEW BEARING CONE
3 - TRANSFER SHAFT
4 - ARBOR PRESS RAM

(25) Install bearing cup and oil baffle to transfer shaft (Fig. 112).

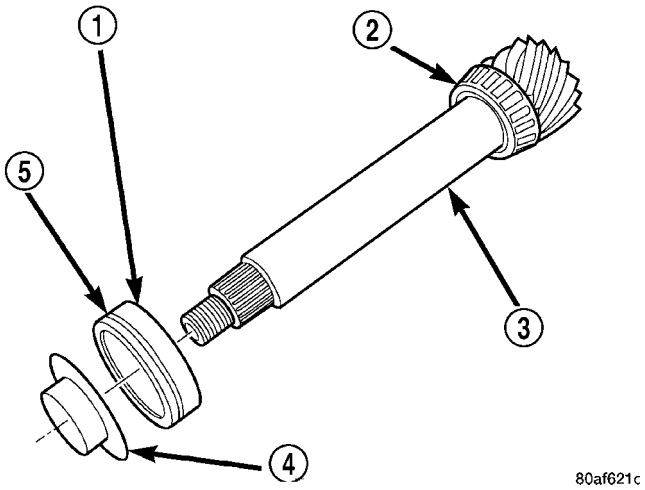

Fig. 112 Install Bearing Cup to Shaft

1 - BEARING CUP
2 - BEARING CONE
3 - TRANSFER SHAFT
4 - OIL BAFFLE
5 - O-RING

(26) Using Tool 5049A, install transfer shaft (Fig. 113).

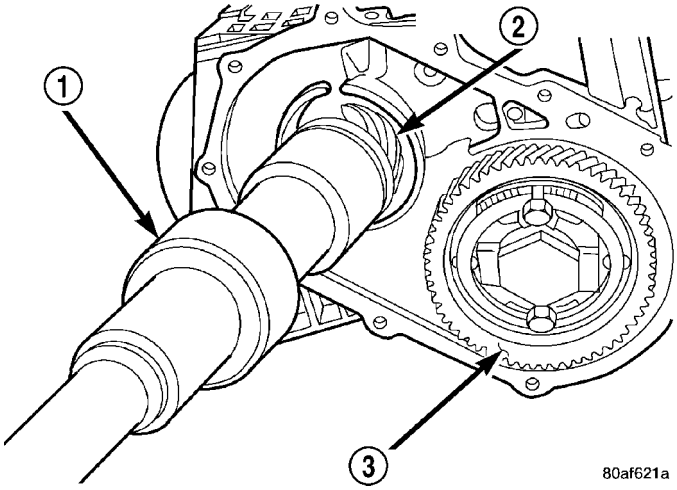

Fig. 113 Install Transfer Shaft

1 - SPECIAL TOOL 5049–A
2 - TRANSFER SHAFT
3 - OUTPUT GEAR

40TE AUTOMATIC TRANSAXLE (Continued)

(27) Using Tool 6051, install transfer shaft bearing snap ring (Fig. 114).

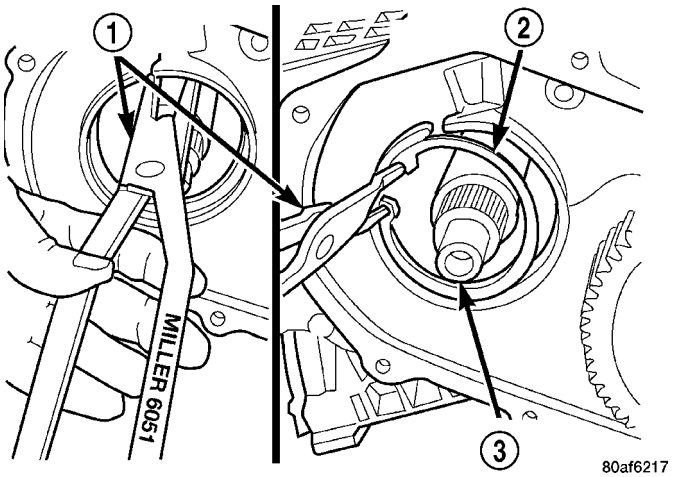

Fig. 114 Install Transfer Shaft Bearing Snap Ring

1 - SNAP RING PLIERS TOOL 6051
2 - TRANSFER SHAFT BEARING SNAP RING
3 - TRANSFER SHAFT

(28) Install transfer shaft bearing cup into retainer using Tool 6061 (Fig. 115).

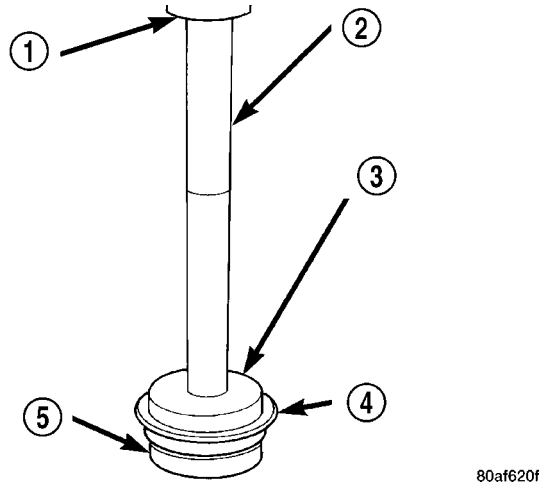

Fig. 115 Install Transfer Shaft Bearing Cup Into Retainer

1 - ARBOR PRESS RAM
2 - HANDLE C-4171
3 - TOOL 6061
4 - TRANSFER SHAFT BEARING CUP RETAINER
5 - USE REMOVED BEARING CUP TO SUPPORT RETAINER

(29) Install bearing cup retainer to transaxle (Fig. 116).

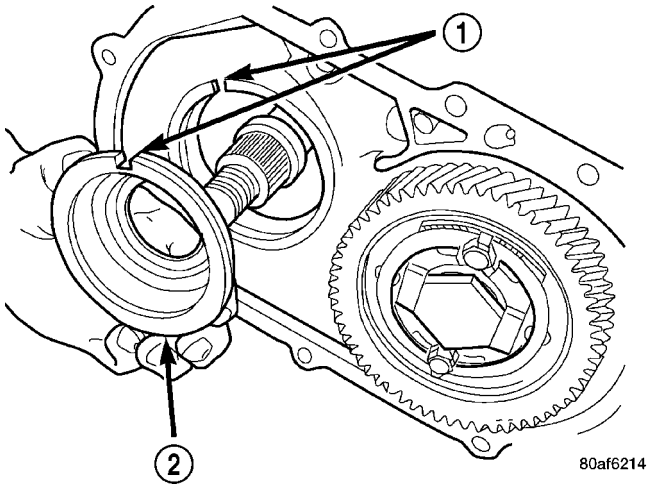

Fig. 116 Install Bearing Cup Retainer

1 - ALIGN INDEXING TAB TO SLOT
2 - BEARING CUP RETAINER

(30) Install transfer gear bearing cone to transfer gear using Tool 5052 (Fig. 117).

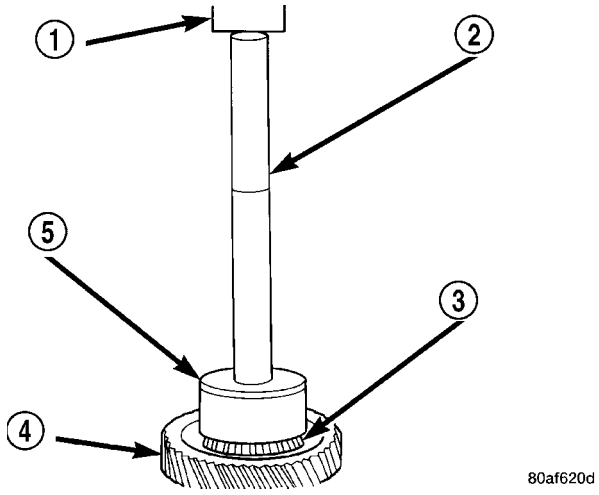

Fig. 117 Install Transfer Gear Bearing Cone

1 - ARBOR PRESS RAM
2 - HANDLE C-4171
3 - NEW BEARING CONE
4 - TRANSFER SHAFT GEAR
5 - TOOL 5052

40TE AUTOMATIC TRANSAXLE (Continued)

(31) **TRANSFER GEAR BEARING ADJUSTMENT:**

(a) Install a 4.66 mm (0.184 in.) gauging shim on the transfer shaft (Fig. 118).

(b) Install transfer shaft gear using Tool 6261. Using Tool 6259, install transfer shaft gear retaining nut to 271 N·m (200 ft. lbs.).

(c) Measure end play. Attach Tool L4432 to the transfer gear.

(d) Mount a steel ball with grease into the end of the transfer shaft.

(e) Push and pull the gear while rotating back and forth to ensure seating of the bearing rollers.

(f) Using a dial indicator, measure transfer shaft end play.

(g) Refer to the transfer shaft bearing shim chart for the required shim combination to obtain the proper bearing setting.

(h) Use Tool 6259 to remove the retaining nut and washer. Remove the transfer shaft gear using Tool L4407A.

(i) Remove the gauging shim (Fig. 118) and install the proper shim indicated by the chart.

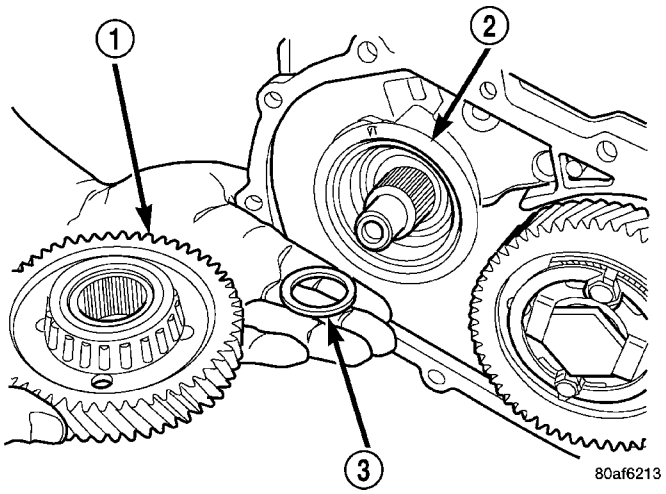

Fig. 118 Install Transfer Shaft Gear and (Select) Shim

1 - TRANSFER SHAFT GEAR
2 - BEARING CUP RETAINER
3 - SHIM (SELECT)

TRANSFER SHAFT BEARING SHIM CHART

End Play	Shim Needed	Part Number	End Play	Shim Needed	Part Number
0.05mm (0.002 in.)	4.66mm (0.183 in.)	4505588AB	0.76mm (0.030 in.)	3.94mm (0.155 in.)	4412818AB
0.08mm (0.003 in.)	4.62mm (0.182 in.)	4412835AB	0.79mm (0.031 in.)	3.90mm (0.154 in.)	4412817AB
0.10mm (0.004 in.)	4.58mm (0.180 in.)	4412834AB	0.81mm (0.032 in.)	3.90mm (0.154 in.)	4412817AB
0.13mm (0.005 in.)	4.58mm (0.180 in.)	4412834AB	0.84mm (0.033 in.)	3.86mm (0.152 in.)	4412816AB
0.15mm (0.006 in.)	4.54mm (0.178 in.)	4412833AB	0.86mm (0.034 in.)	3.82mm (0.150 in.)	4412815AB
0.18mm (0.007 in.)	4.50mm (0.177 in.)	4412832AB	0.89mm (0.035 in.)	3.82mm (0.150 in.)	4412815AB
0.20mm (0.008 in.)	4.50mm (0.177 in.)	4412832AB	0.91mm (0.036 in.)	3.78mm (0.149 in.)	4412814AB
0.23mm (0.009 in.)	4.46mm (0.175 in.)	4412831AB	0.94mm (0.037 in.)	3.74mm (0.147 in.)	4412813AB
0.25mm (0.010 in.)	4.46mm (0.175 in.)	4412831AB	0.97mm (0.038 in.)	3.74mm (0.147 in.)	4412813AB
0.28mm (0.011 in.)	4.42mm (0.174 in.)	4412830AB	0.99mm (0.039 in.)	3.70mm (0.146 in.)	4412812AB
0.30mm (0.012 in.)	4.38mm (0.172 in.)	4412829AB	1.02mm (0.040 in.)	3.66mm (0.144 in.)	4412811AB
0.33mm (0.013 in.)	4.38mm (0.172 in.)	4412829AB	1.04mm (0.041 in.)	3.66mm (0.144 in.)	4412811AB

40TE AUTOMATIC TRANSAXLE (Continued)

End Play	Shim Needed	Part Number	End Play	Shim Needed	Part Number
0.36mm (0.014 in.)	4.34mm (0.171 in.)	4412828AB	1.07mm (0.042 in.)	3.62mm (0.143 in.)	4412810AB
0.38mm (0.015 in.)	4.30mm (0.169 in.)	4412827AB	1.08mm (0.043 in.)	3.62mm (0.143 in.)	4412810AB
0.41mm (0.016 in.)	4.30mm (0.169 in.)	4412827AB	1.12mm (0.044 in.)	3.58mm (0.141)	4412809AB
0.43mm (0.017 in.)	4.26mm (0.168 in.)	4412826AB	1.14mm (0.045 in.)	3.54mm (0.139 in.)	4412808AB
0.46mm (0.018 in.)	4.22mm (0.166 in.)	4412825AB	1.17mm (0.046 in.)	3.54mm (0.139 in.)	4412808AB
0.48mm (0.019 in.)	4.22mm (0.166 in.)	4412825AB	1.19mm (0.047 in.)	3.50mm (0.138 in.)	4412807AB
0.50mm (0.020 in.)	4.18mm (0.165 in.)	4412824AB	1.22mm (0.048 in.)	3.46mm (0.136 in.)	4412806AB
0.53mm (0.021 in.)	4.18mm (0.165 in.)	4412824AB	1.24mm (0.049 in.)	3.46mm (0.136 in.)	4412806AB
0.56mm (0.022 in.)	4.14mm (0.163 in.)	4412823AB	1.27mm (0.050 in.)	3.42mm (0.135 in.)	4412805AB
0.58mm (0.023 in.)	4.10mm (0.161 in.)	4412822AB	1.30mm (0.051 in.)	3.38mm (0.133 in.)	4412804AB
0.61mm (0.024 in.)	4.10mm (0.161 in.)	4412822AB	1.32mm (0.052 in.)	3.38mm (0.133 in.)	4412804AB
0.64mm (0.025 in.)	4.06mm (0.160 in.)	4412821AB	1.35mm (0.053 in.)	3.34mm (0.132 in.)	4412803AB
0.66mm (0.026 in.)	4.02mm (0.158 in.)	4412820AB	1.37mm (0.054 in.)	3.34mm (0.132 in.)	4412803AB
0.69mm (0.027 in.)	4.02mm (0.158 in.)	4412820AB	1.40mm (0.055 in.)	3.30mm (0.130 in.)	4412802AB
0.71mm (0.028 in.)	3.98mm (0.157 in.)	4412819AB	1.45mm (0.057 in	3.26mm (0.128 in.)	4412801AB
0.74mm (0.029 in.)	3.94mm (0.155 in.)	4412818AB	1.47mm (0.058 in.)	2.22mm (0.127 in.)	4505570AB

40TE AUTOMATIC TRANSAXLE (Continued)

(32) Install the transfer shaft gear using Tool 6261 (Fig. 119).

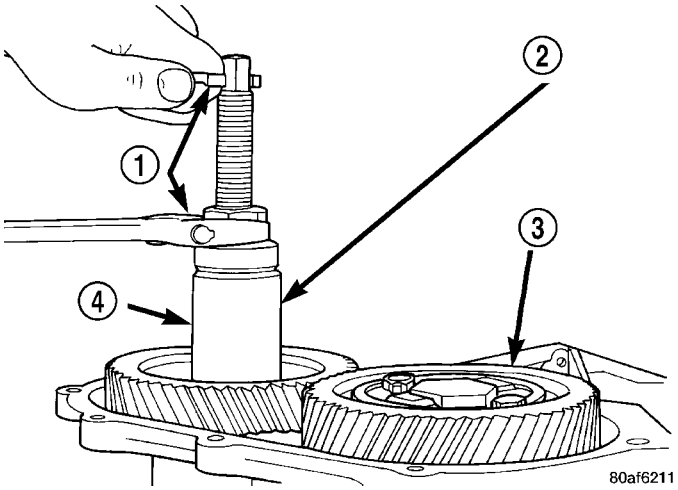

Fig. 119 Install Transfer Shaft Gear

1 - WRENCHES
2 - SPECIAL TOOL 6261
3 - OUTPUT GEAR
4 - TRANSFER SHAFT GEAR

CAUTION: Install a NEW retaining nut, as the original nut MUST NOT be reused.

(33) Install the new retaining nut and washer.

(34) Using Tool 6259, torque transfer gear retaining nut to 271 N·m (200 ft. lbs.) (Fig. 120).

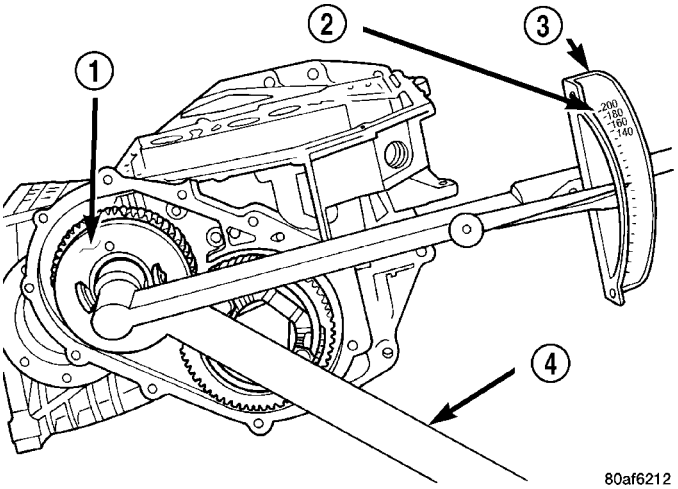

Fig. 120 Tighten Nut to 271 N•m (200 ft. lbs.)

1 - TRANSFER SHAFT GEAR
2 - 200 FT. LBS.
3 - TORQUE WRENCH
4 - SPECIAL TOOL 6259

(35) Measure transfer shaft end play. **Transfer shaft end play should be within 0.05-0.10 mm (0.002-0.004 in.).** If the end play is too high, install a 0.04 mm (0.0016 in.) thicker shim. If the end play is too low, install a 0.04 mm (0.0016 in.) thinner shim. Repeat until 0.05-0.10 mm (0.002-0.004 in.) end play is obtained.

(36) Install a bead of Mopar® ATF RTV (MS-GF41) to transfer gear cover (Fig. 121).

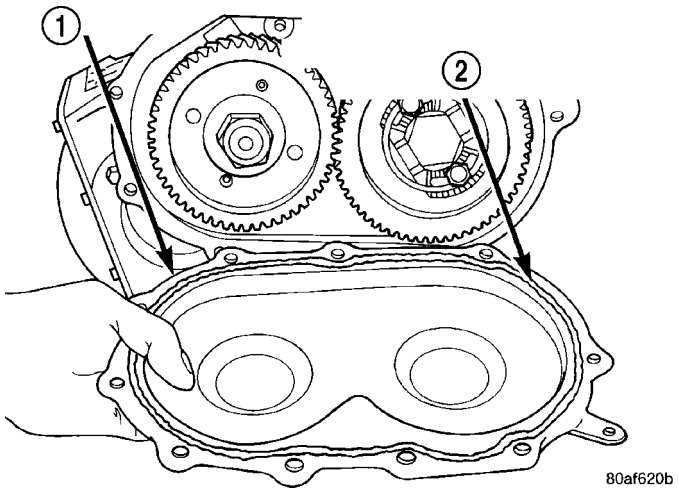

Fig. 121 Install Rear Cover

1 - REAR COVER
2 - 1/8 INCH BEAD OF MOPAR® ATF RTV (MS-GF41) AS SHOWN

(37) Install transfer gear cover-to-case bolts and torque to 20 N·m (175 in. lbs.) torque (Fig. 122).

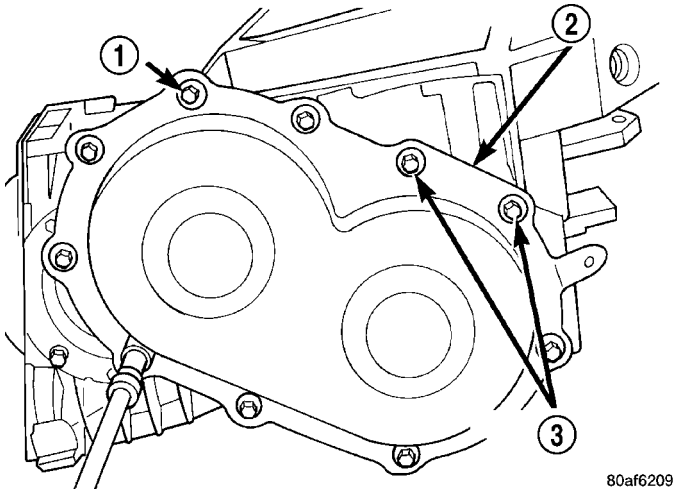

Fig. 122 Install Rear Cover Bolts

1 - REAR COVER BOLTS
2 - REAR COVER
3 - USE SEALANT ON BOLTS

40TE AUTOMATIC TRANSAXLE (Continued)

(38) Install low/reverse clutch pack (Fig. 123). Leave uppermost disc out until snap ring is installed.

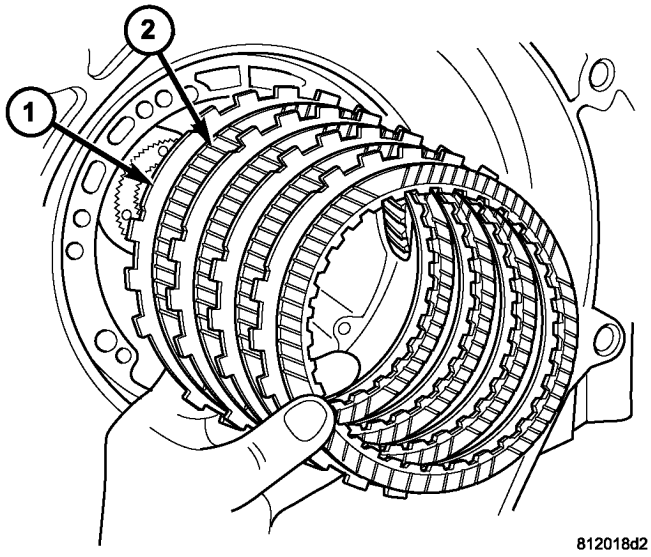

Fig. 123 Install Low/Reverse Clutch

1 - CLUTCH PLATE
2 - CLUTCH DISC

(39) Install low/reverse reaction plate flat snap ring (Fig. 124).

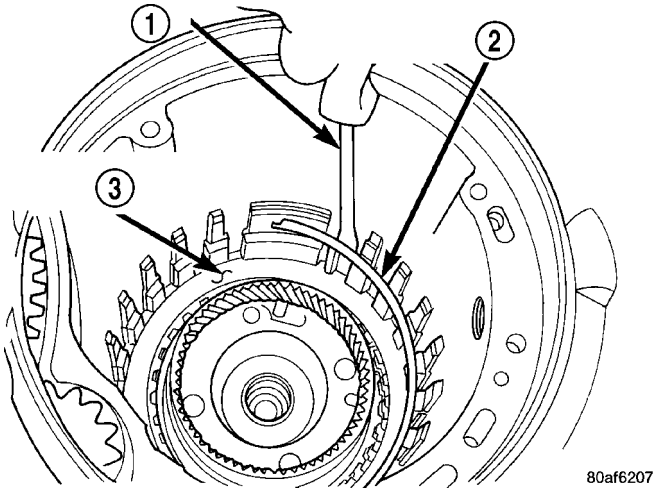

Fig. 124 Install Low/Reverse Reaction Plate Snap Ring

1 - SCREWDRIVER
2 - LOW/REVERSE REACTION PLATE FLAT SNAP RING
3 - DO NOT SCRATCH CLUTCH PLATE

(40) Install remaining low/reverse clutch disc (Fig. 125).

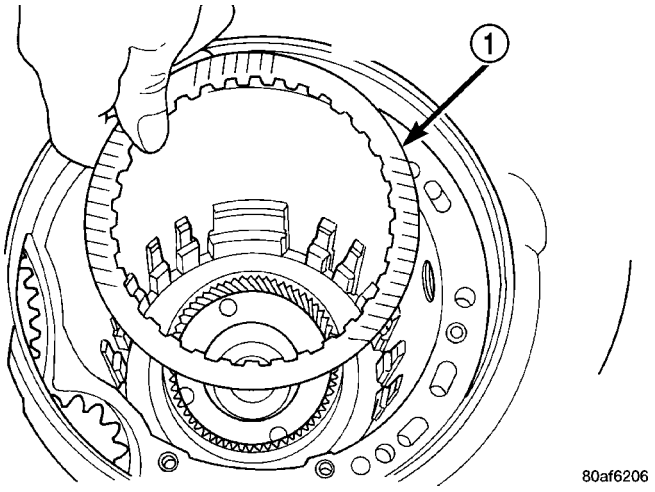

Fig. 125 Install One Disc

1 - ONE DISC FROM LOW/REVERSE CLUTCH

(41) Install low/reverse reaction plate with flat side up (Fig. 126).

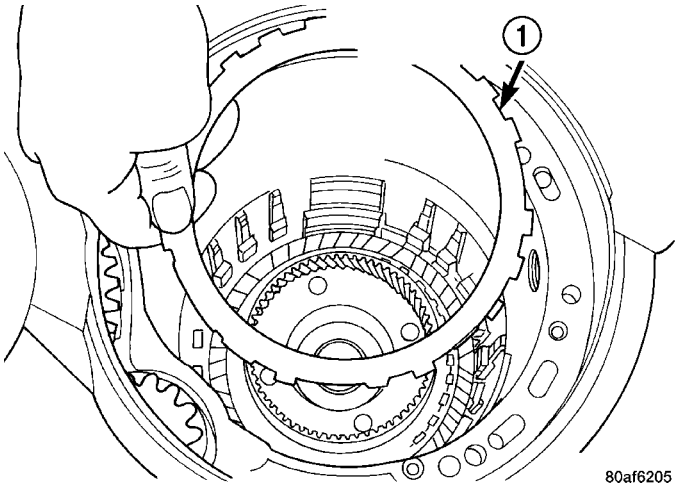

Fig. 126 Install Low/Reverse Reaction Plate

1 - LOW/REVERSE REACTION PLATE (FLAT SIDE UP)

40TE AUTOMATIC TRANSAXLE (Continued)

(42) Install tapered snap ring (with tapered side up) as shown in (Fig. 127) (Fig. 128).

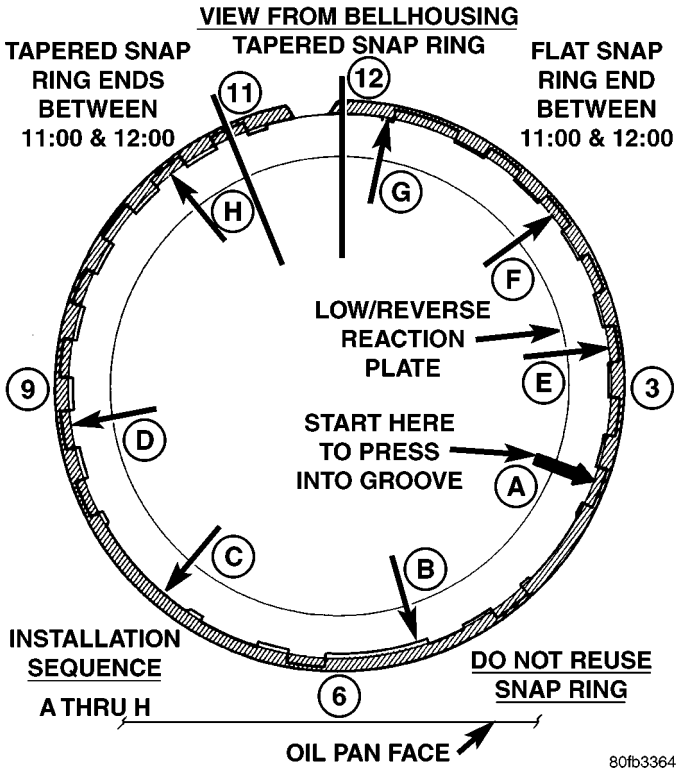

Fig. 127 Tapered Snap Ring Instructions

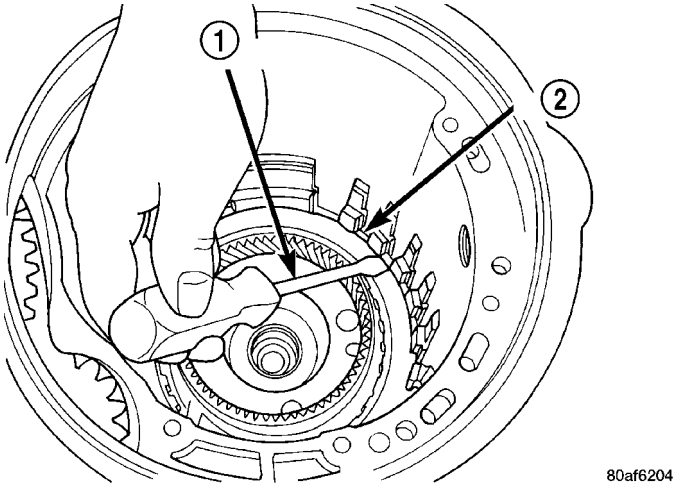

Fig. 128 Snap Ring Installed

1 - SCREWDRIVER
2 - TAPERED SNAP RING (INSTALL AS SHOWN)

(43) Set up dial indicator as shown in (Fig. 129) to measure low/reverse clutch clearance. Press down on clutch pack with finger and zero dial indicator. **Low/Reverse clutch pack clearance is 0.89-1.47 mm (0.035-0.058 in.)**. Set up indicator and record measurement in four (4) places. Take average of readings and select the proper low/reverse reaction plate to achieve specifications.

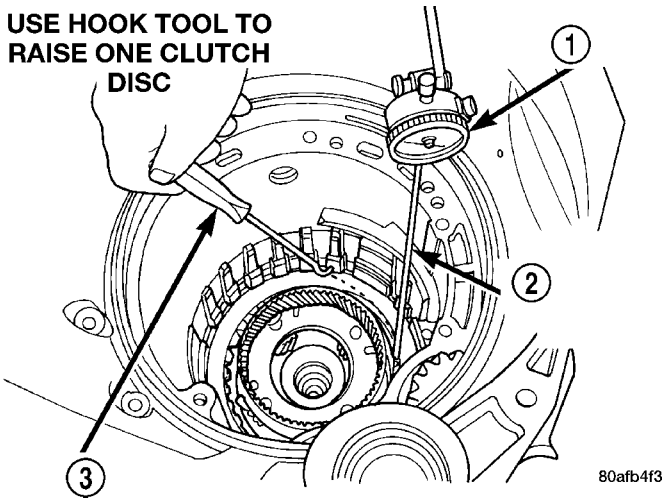

Fig. 129 Check Low/Reverse Clutch Clearance

1 - DIAL INDICATOR
2 - DIAL INDICATOR TIP TOOL 6268
3 - HOOK TOOL

LOW/REVERSE REACTION PLATE CHART

PART NUMBER	THICKNESS
4799846AA	5.88 mm (0.232 in.)
4799847AA	6.14 mm (0.242 in.)
4799848AA	6.40 mm (0.252 in.)
4799849AA	6.66 mm (0.262 in.)
4799855AA	6.92 mm (0.273 in.)

(44) Install 2/4 clutch pack (Fig. 130).

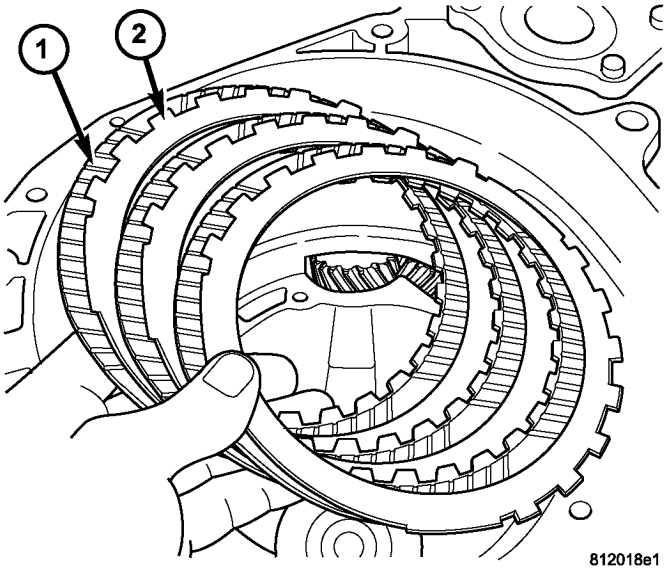

Fig. 130 Install 2/4 Clutch

1 - CLUTCH DISC
2 - CLUTCH PLATE

40TE AUTOMATIC TRANSAXLE (Continued)

NOTE: The 2/4 Clutch Piston has bonded seals which are not individually serviceable. Seal replacement requires replacement of the piston assembly.

(45) Orient 2/4 clutch return spring to retainer as shown in (Fig. 131), and install to transaxle (Fig. 132).

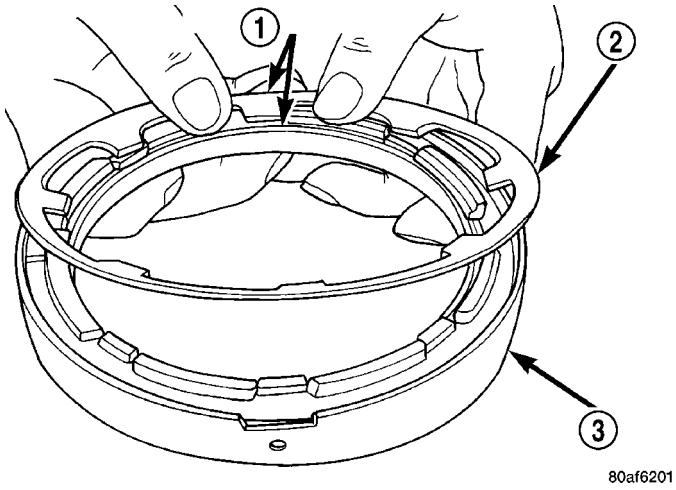

Fig. 131 Proper Orientation of 2/4 Clutch Retainer and Spring

1 - NOTE POSITION
2 - RETURN SPRING
3 - 2/4 CLUTCH RETAINER

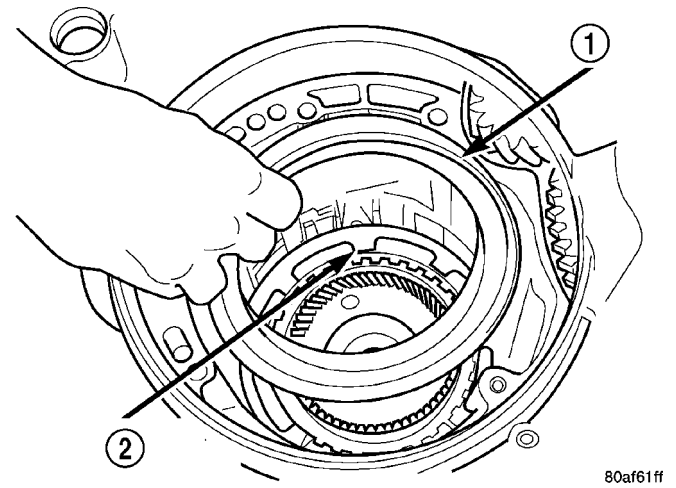

Fig. 132 2/4 Clutch Retainer

1 - 2/4 CLUTCH RETAINER
2 - 2/4 CLUTCH RETURN SPRING

(46) Using tool 5058, compress 2/4 clutch return spring just enough to install snap ring (Fig. 133).

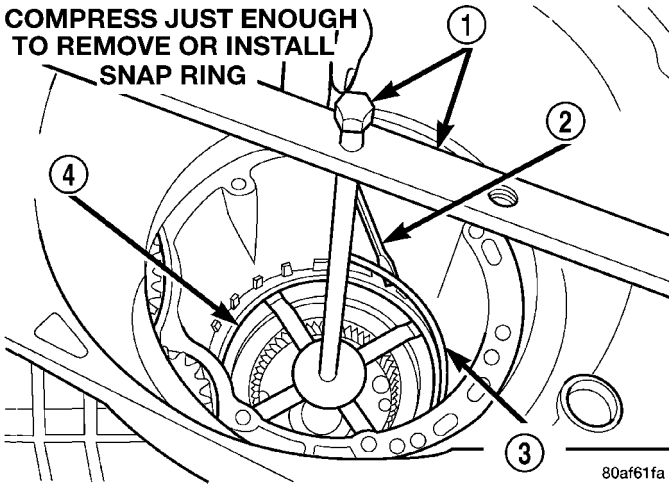

Fig. 133 Install 2/4 Clutch Retainer Snap Ring

1 - TOOL 5058
2 - SCREWDRIVER
3 - SNAP RING
4 - 2/4 CLUTCH RETAINER

(47) Install snap ring.

(48) Set up dial indicator as shown in (Fig. 134) and measure 2/4 clutch clearance. Press down on clutch pack with finger and zero dial indicator. **2/4 clutch pack clearance is 0.76-2.64 mm (0.030-0.104 in.).** Set up indicator and record measurement in four (4) places. Take average of readings. If clearance is outside this range, the clutch is assembled improperly. **There is no adjustment for 2/4 clutch clearance.**

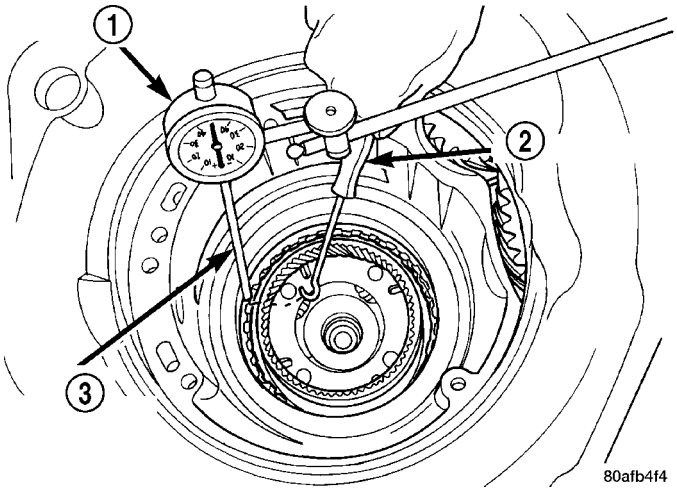

Fig. 134 Check 2/4 Clutch Clearance

1 - DIAL INDICATOR
2 - HOOK TOOL
3 - DIAL INDICATOR TIP TOOL 6268

40TE AUTOMATIC TRANSAXLE (Continued)

(49) Install rear sun gear and #7 needle bearing (Fig. 136).

NOTE: The number seven needle bearing has three anti-reversal tabs and is common with the number five and number two position. The orientation should allow the bearing to seat flat against the rear sun gear (Fig. 135). A small amount of petrolatum can be used to hold the bearing to the rear sun gear.

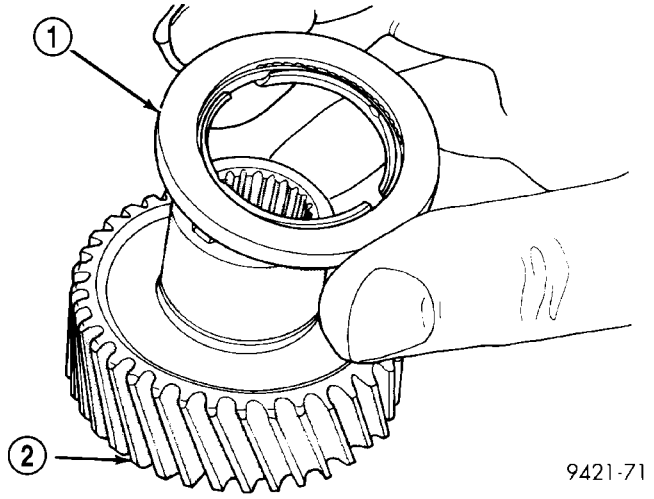

Fig. 135 Number 7 Bearing

1 - #7 NEEDLE BEARING
2 - REAR SUN GEAR

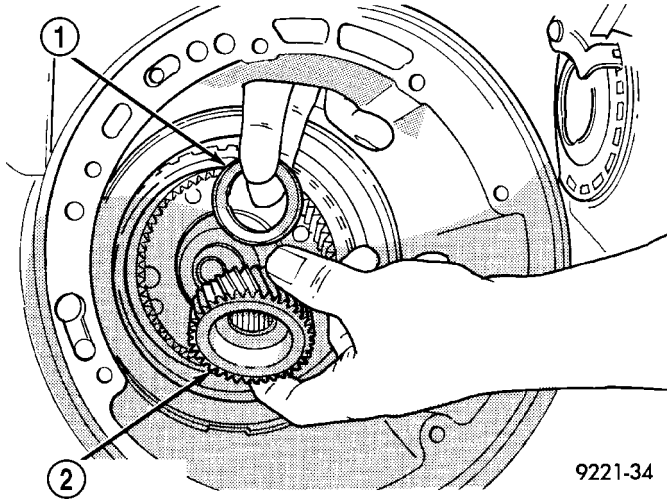

Fig. 136 Install Rear Sun Gear and #7 Needle Bearing

1 - #7 NEEDLE BEARING
2 - REAR SUN GEAR

(50) Install front carrier/rear annulus assembly and #6 needle bearing (Fig. 137).

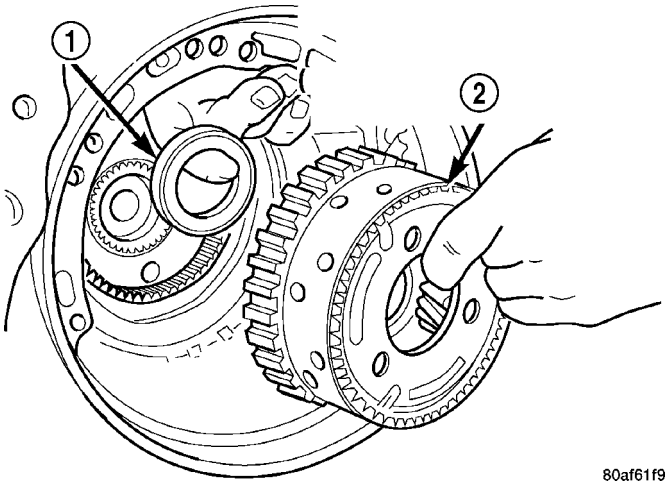

Fig. 137 Install Front Carrier/Rear Annulus Assembly

1 - #6 NEEDLE BEARING
2 - FRONT CARRIER AND REAR ANNULUS ASSEMBLY (TWIST AND PULL OR PUSH TO REMOVE OR INSTALL).

(51) Install front sun gear assembly and #4 thrust washer (Fig. 138).

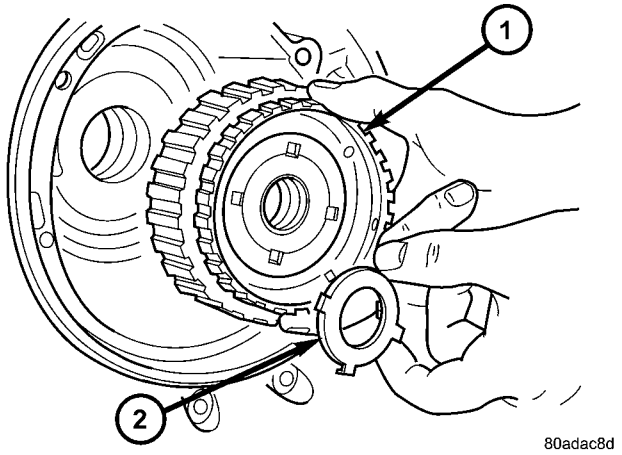

Fig. 138 Install Front Sun Gear Assembly

1 - FRONT SUN GEAR ASSEMBLY
2 - #4 THRUST WASHER (FOUR TABS)

40TE AUTOMATIC TRANSAXLE (Continued)

(52) **DETERMINING #4 THRUST PLATE THICKNESS / INPUT SHAFT END PLAY:**

(a) Select the thinnest #4 thrust plate thickness and install to input clutch assembly (Fig. 139). Use petrolatum to retain.

(b) Install input clutch assembly into position and verify that it is completely seated by viewing through input speed sensor hole. If view through input speed sensor hole is not as shown in (Fig. 140), the input clutch assembly is not seated properly.

(c) Remove oil pump o-ring (Fig. 141). **Be sure to reinstall oil pump o-ring after selecting the proper #4 thrust plate.**

(d) Install pump and gasket to transmission. Install and torque bolts.

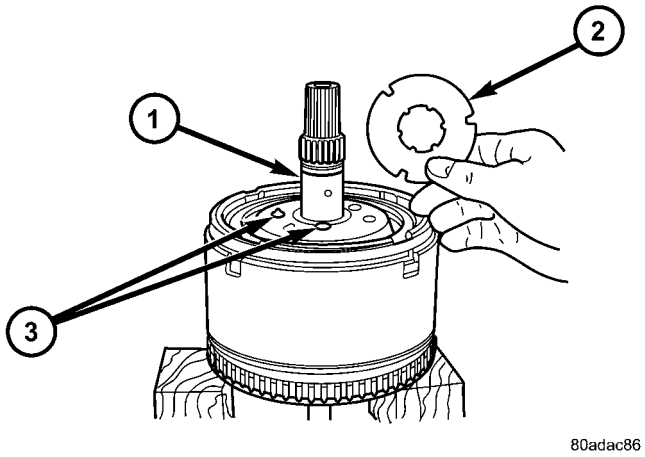

Fig. 139 Select Thinnest No. 4 Thrust Plate

1 - OVERDRIVE SHAFT ASSEMBLY
2 - #4 THRUST PLATE (SELECT)
3 - 3 DABS OF PETROLATUM FOR RETENTION

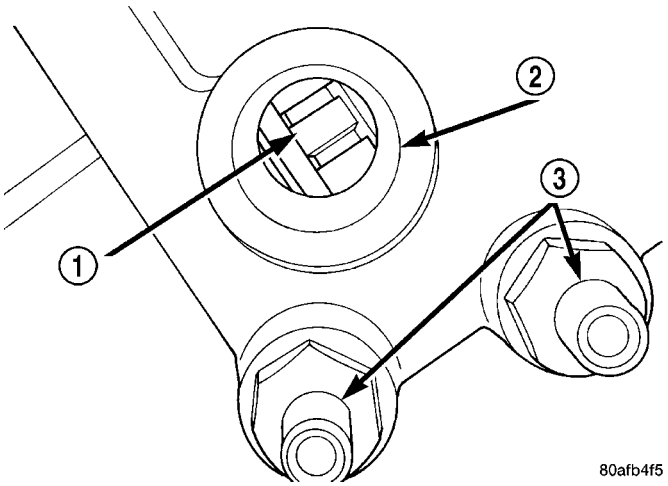

Fig. 140 View Through Input Speed Sensor Hole

1 - INPUT CLUTCH RETAINER
2 - INPUT SPEED SENSOR HOLE
3 - OIL COOLER FITTINGS

(e) Set up input shaft for measurement with Indicator Set C3339 and End Play Set 8266 as shown in (Fig. 142).

(f) Measure the input shaft end play with the transaxle in the vertical position. **Input shaft end play must be within 0.005 to 0.025 inch.** For example, if end play reading is 0.055 inch, select No. 4 Thrust Plate which is 0.071 to 0.074 thick. This should provide an input shaft end play reading of 0.020 inch which is within specifications.

(g) Refer to the No. 4 thrust plate chart to select the proper No. 4 thrust plate:

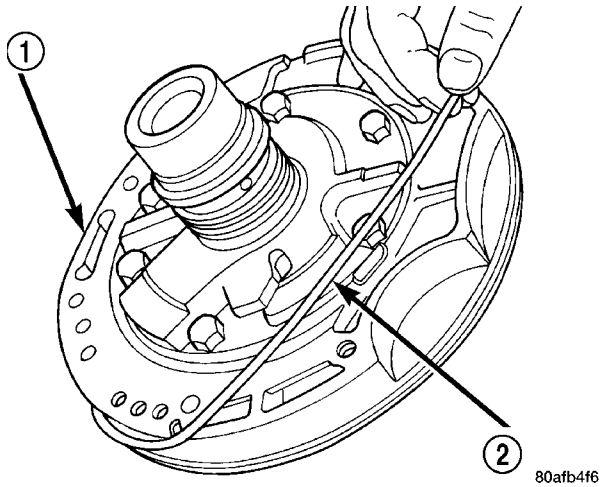

Fig. 141 Remove Oil Pump O-Ring

1 - OIL PUMP ASSEMBLY
2 - O-RING

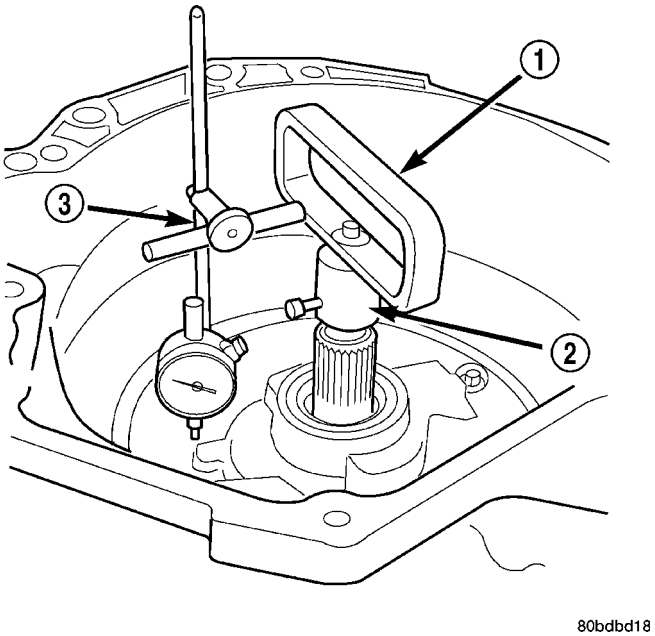

Fig. 142 Measure Input Shaft End Play Using Tool 8266—Typical

1 - TOOL 8266–8
2 - TOOL 8266–2
3 - TOOL C-3339

40TE AUTOMATIC TRANSAXLE (Continued)

NO. 4 THRUST PLATE CHART

PART NUMBER	THICKNESS
4431665AB	1.60mm (0.063 in.)
3836237AB	1.73mm (0.068 in.)
4431666AB	1.80mm (0.071 in.)
3836238AB	1.96mm (0.077 in.)
4431667AB	2.03mm (0.080 in.)
3836239AB	2.16mm (0.085 in.)
4431668AB	2.24mm (0.088 in.)
3836240AB	2.39mm (0.094 in.)
4431669AB	2.46mm (0.097 in.)
3836241AB	2.62mm (0.103 in.)
4446670AB	2.67mm (0.105 in.)
4446671AB	2.90mm (0.114 in.)

(53) Install input clutch assembly (Fig. 143).

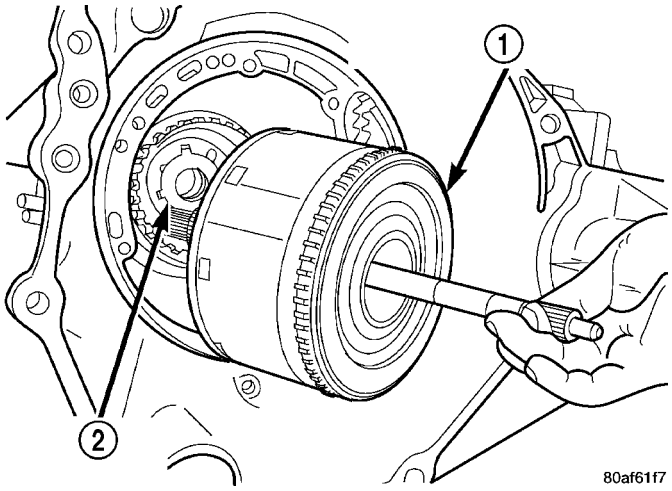

Fig. 143 Install Input Clutch Assembly

1 - INPUT CLUTCH ASSEMBLY
2 - #4 THRUST WASHER

(54) Install #1 caged needle bearing (Fig. 144).

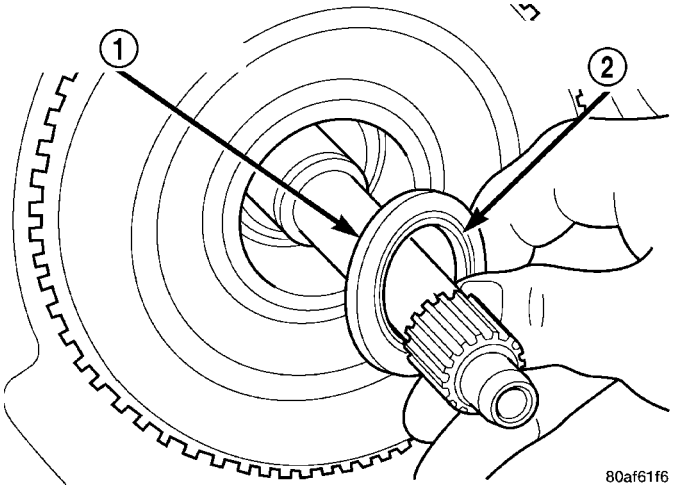

Fig. 144 Install No. 1 Caged Needle Bearing

1 - #1 CAGED NEEDLE BEARING
2 - NOTE: TANGED SIDE OUT

CAUTION: The cooler bypass valve must be replaced if transaxle failure has occurred. Do not attempt to reuse or clean old valve.

(55) Install cooler bypass valve with o-ring end towards rear of case (Fig. 145).

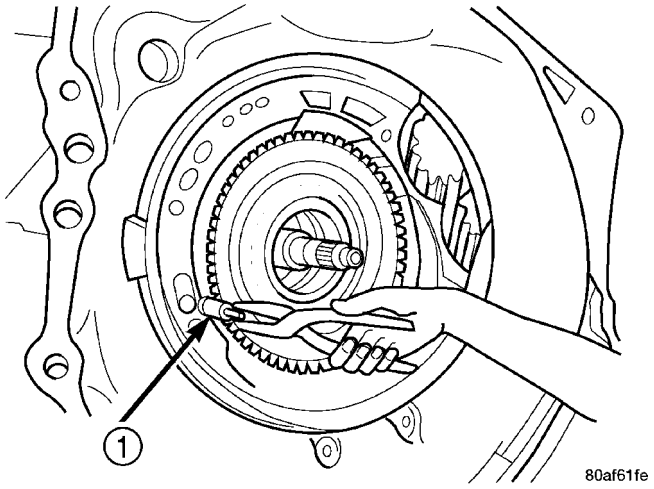

Fig. 145 Install Cooler Bypass Valve

1 - COOLER BYPASS VALVE

40TE AUTOMATIC TRANSAXLE (Continued)

(56) Install oil pump gasket (Fig. 146).

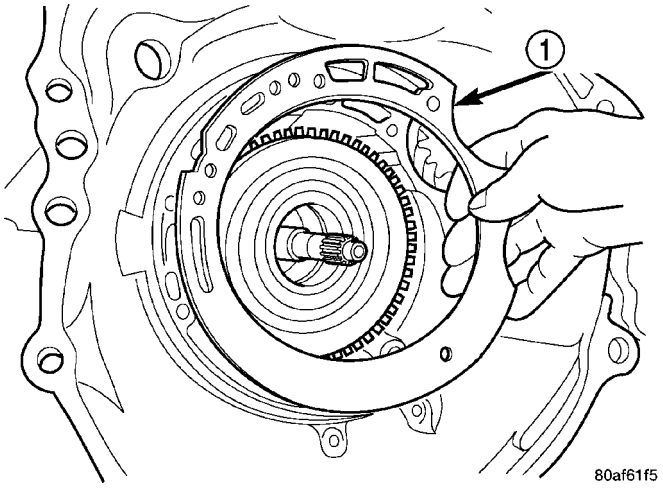

Fig. 146 Install Oil Pump Gasket

1 - PUMP GASKET

(57) Install oil pump assembly (Fig. 147).

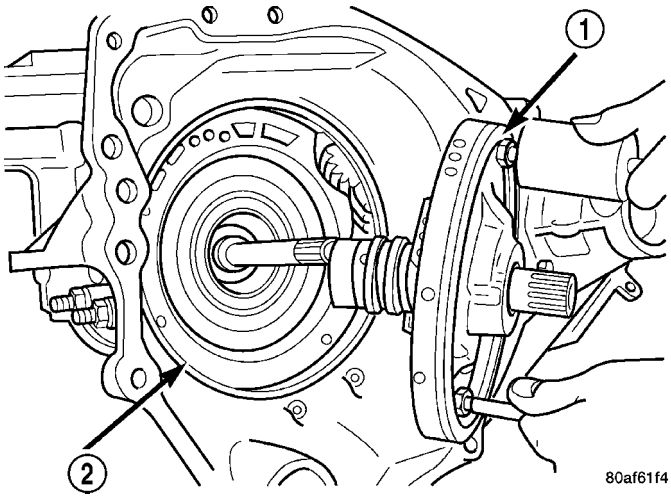

Fig. 147 Install Oil Pump

1 - OIL PUMP
2 - GASKET

(58) Install oil pump-to-case bolts and torque to 27 N·m (20 ft. lbs.) (Fig. 148).

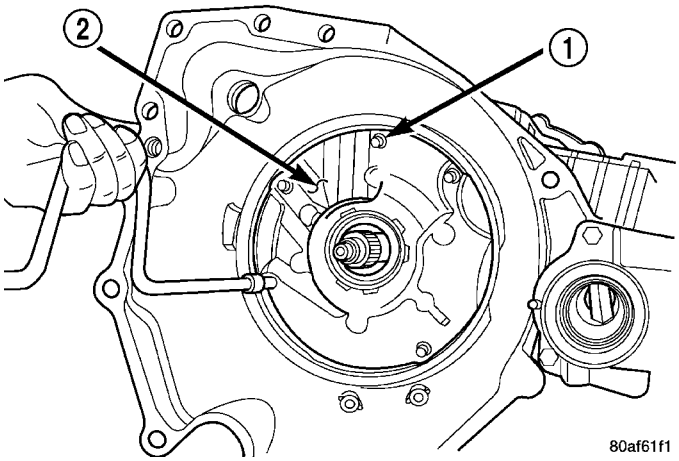

Fig. 148 Install Pump-to-Case Bolts

1 - PUMP ATTACHING BOLTS
2 - PUMP HOUSING

(59) Install low/reverse accumulator (Fig. 149).

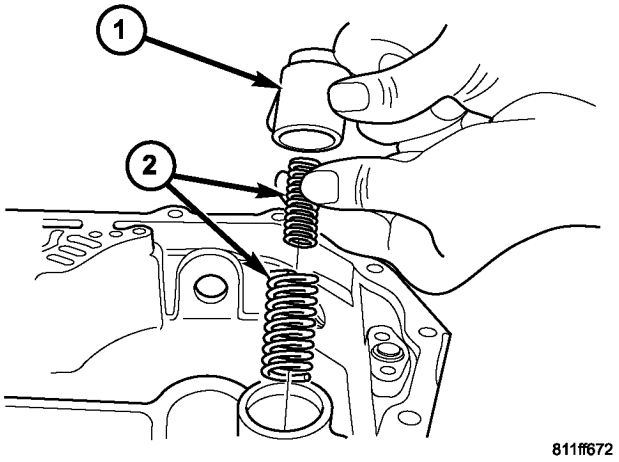

Fig. 149 Low/Reverse Accumulator

1 - PISTON
2 - RETURN SPRINGS

40TE AUTOMATIC TRANSAXLE (Continued)

(60) Install low/reverse accumulator plug (Fig. 150).

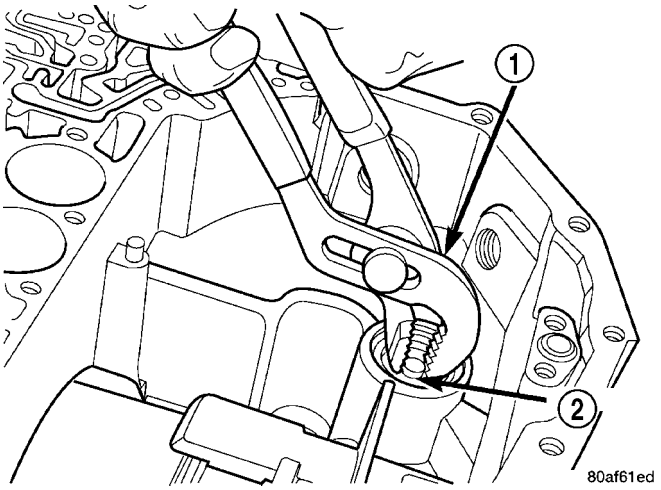

Fig. 150 Install Low/Reverse Accumulator Plug

1 - ADJUSTABLE PLIERS
2 - PLUG

(61) Install low/reverse accumulator snap ring (Fig. 151).

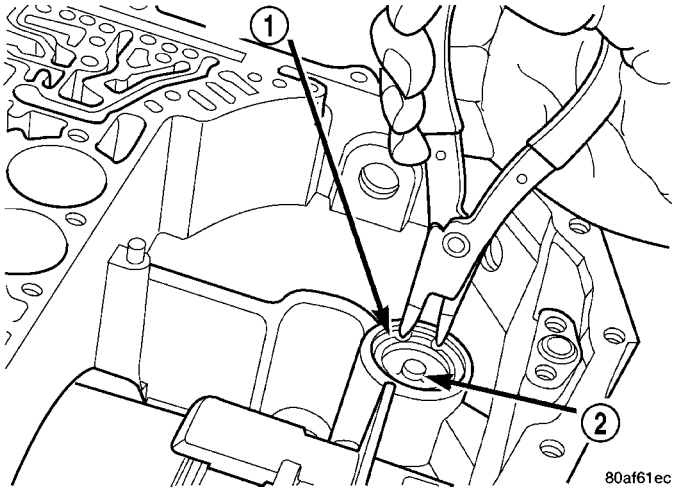

Fig. 151 Install Low/Reverse Accumulator Snap Ring

1 - SNAP RING
2 - PLUG

NOTE: Depending on engine application, some accumulators will have two springs, and others will have one spring. The springs are color-coded for application and year.

(62) Install underdrive and overdrive accumulators and springs (Fig. 152).

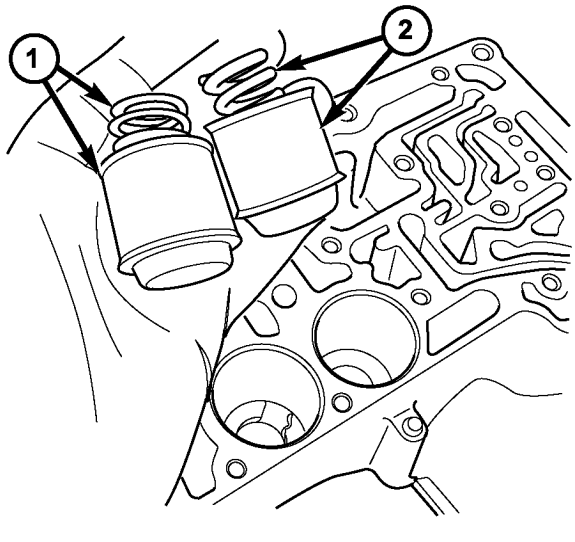

Fig. 152 Underdrive and Overdrive Accumulators

1 - OVERDRIVE PISTON AND SPRING
2 - UNDERDRIVE PISTON AND SPRING

(63) Install valve body to transaxle (Fig. 153). Rotate manual valve shaft fully clockwise to ease installation. Make sure park rod rollers are positioned within park guide bracket.

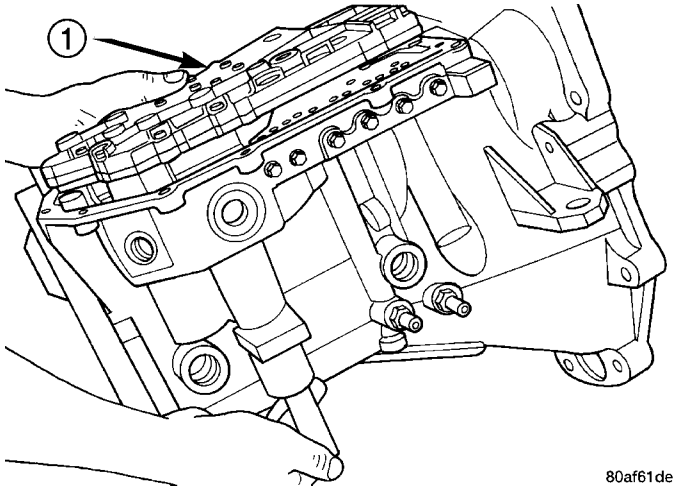

Fig. 153 Valve Body Removal/Installation

1 - VALVE BODY

40TE AUTOMATIC TRANSAXLE (Continued)

(64) Install and torque valve body-to-case bolts to 12 N·m (105 in. lbs.) (Fig. 154).

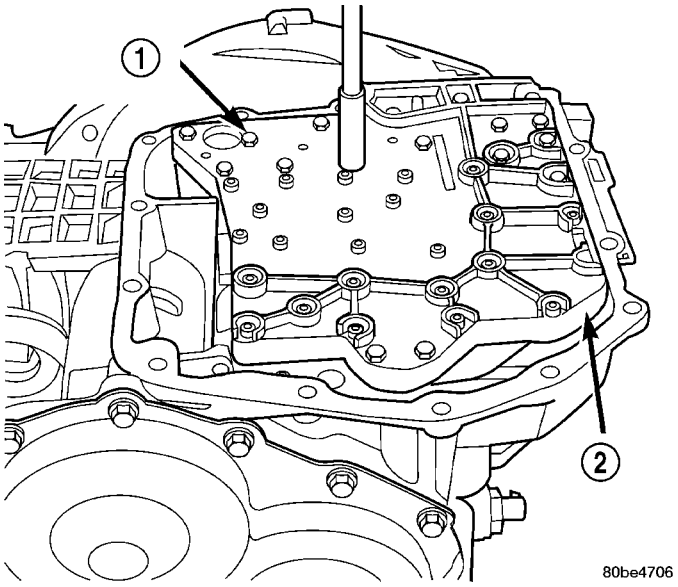

Fig. 154 Install Valve Body-to-Case Bolts

1 - VALVE BODY ATTACHING BOLTS (18)
2 - VALVE BODY

(65) Install oil filter and new o-ring (Fig. 155).

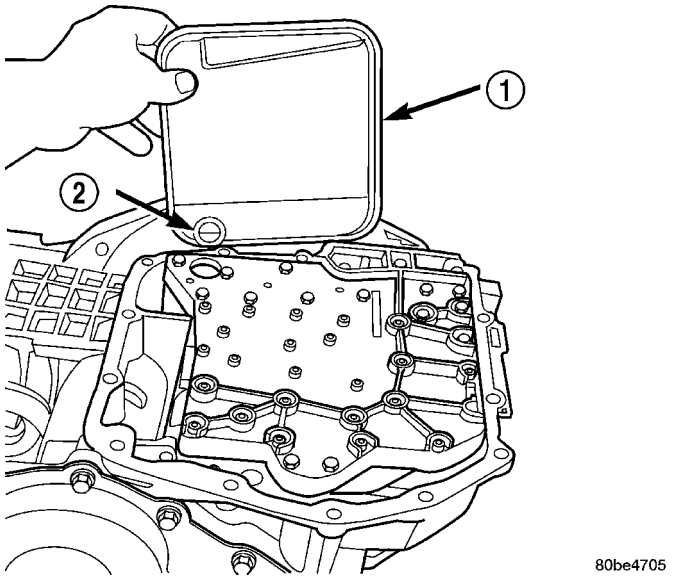

Fig. 155 Install Oil Filter and O-Ring

1 - OIL FILTER
2 - O-RING

(66) Apply an 1/8" bead of Mopar® ATF RTV (MS-GF41) to oil pan and immediately install to case (Fig. 156).

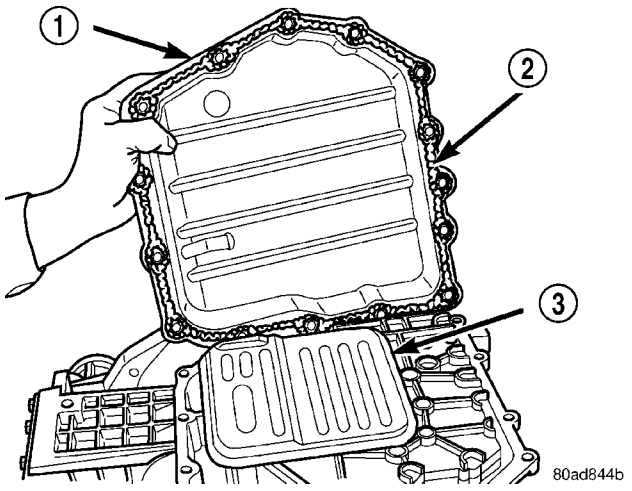

Fig. 156 Install Oil Pan

1 - OIL PAN
2 - 1/8 INCH BEAD OF MOPAR® ATF RTV (MS-GF41)
3 - OIL FILTER

(67) Install oil pan-to-case bolts and torque to 19 N·m (165 in. lbs.).

(68) Install solenoid/pressure switch assembly and gasket to case (Fig. 157).

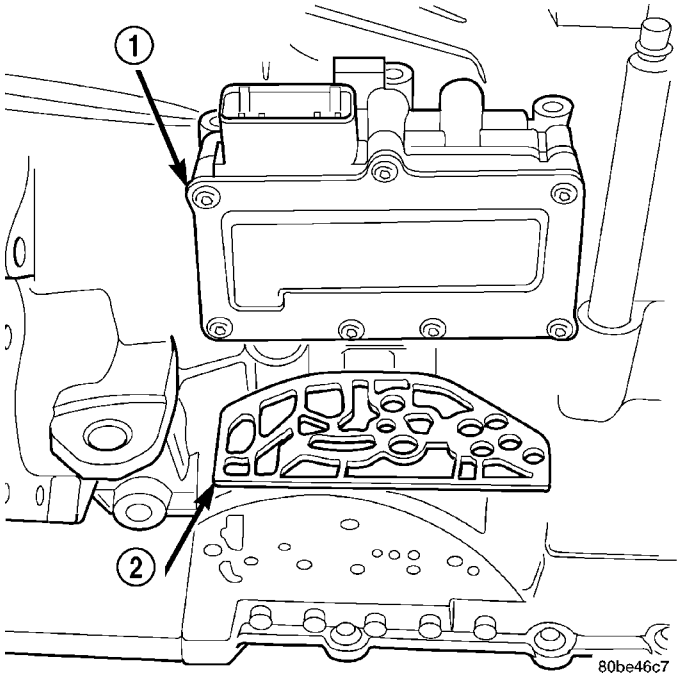

Fig. 157 Solenoid/Pressure Switch Assembly and Gasket

1 - SOLENOID/PRESSURE SWITCH ASSEMBLY
2 - GASKET

(69) Install and tighten solenoid/pressure switch assembly-to-transaxle case bolts to 12 N·m (110 in. lbs.) (Fig. 158).

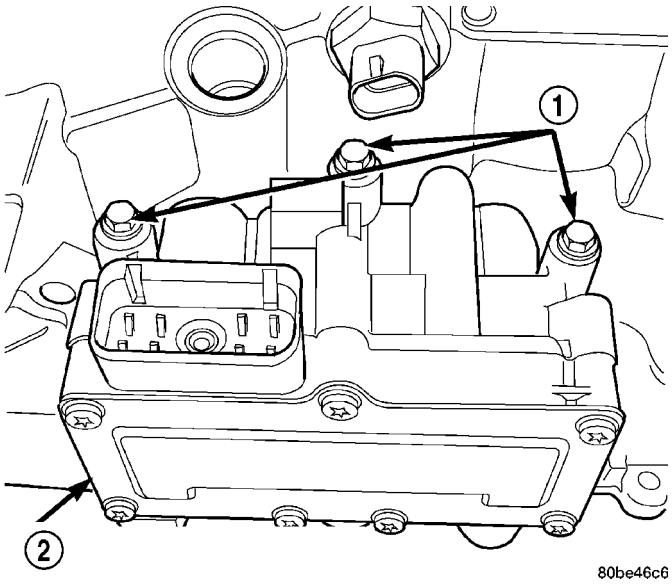

Fig. 158 Attaching Bolts

1 - BOLTS
2 - SOLENOID AND PRESSURE SWITCH ASSEMBLY

(70) Install and torque input and output speed sensors to case to 27 N·m (20 ft. lbs.).

INSTALLATION

NOTE: If transaxle assembly has been replaced or overhauled (clutch and/or seal replacement), it is necessary to perfrom the "Quick-Learn" procedure. (Refer to 8 - ELECTRICAL/ELECTRONIC CONTROL MODULES/TRANSMISSION CONTROL MODULE - STANDARD PROCEDURE)

(1) Using a transmission jack and a helper, position transaxle assembly to engine. Install and torque bellhousing bolts to 95 N·m (70 ft. lbs.).

(2) Install upper mount assembly to transaxle and torque bolts to 54 N·m (40 ft. lbs.) (Fig. 159).

(3) Raise engine/transaxle assembly into position. Install and torque upper mount-to-bracket thru-bolt to 75 N·m (55 ft. lbs.) (Fig. 159).

(4) Remove transmission jack and screw jack.

(5) Secure left wheelhouse splash shield.

(6) Install torque converter-to-drive plate bolts and torque to 88 N·m (65 ft. lbs.)

(7) Install inspection cover.

(8) Install lateral bending brace.

(9) Install starter motor.

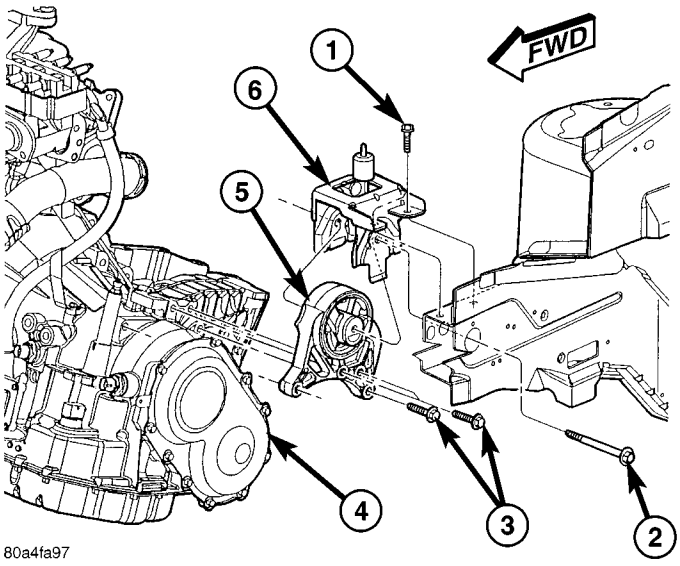

Fig. 159 Left Mount to Bracket and Transaxle

1 - BOLT - BRACKET TO FRAME RAIL 68 N·m (50 ft. lbs.)
2 - BOLT - MOUNT TO RAIL THRU 75 N·m (55 ft. lbs.)
3 - BOLT - LEFT MOUNT TO TRANSAXLE 54 N·m (40 ft. lbs.)
4 - TRANSAXLE
5 - MOUNT - LEFT
6 - BRACKET - LEFT MOUNT

(10) Install front mount/bracket assembly.

(11) Align and install rear mount bracket-to-case bolts by hand (Fig. 160). Torque horizontal bolt to 102 N·m (75 ft. lbs.).

(12) AWD models: Install power transfer unit. (Refer to 21 - TRANSMISSION/TRANSAXLE/ POWER TRANSFER UNIT - INSTALLATION)

(13) Install left and right halfshaft assemblies. (Refer to 3 - DIFFERENTIAL & DRIVELINE/HALF SHAFT - INSTALLATION)

(14) Install front wheel/tire assemblies.

(15) Lower vehicle.

(16) Torque remaining rear mount bracket-to-transaxle vertical bolts (Fig. 160) to 102 N·m (75 ft. lbs.).

(17) Install transaxle upper bellhousing-to-block bolts and torque to 95 N·m (70 ft. lbs.).

(18) Install and connect crank position sensor (if equipped).

(19) Connect gearshift cable to upper mount bracket and transaxle manual valve lever (Fig. 161).

(20) Connect solenoid/pressure switch assembly (Fig. 162).

(21) Connect transmission range sensor connector (Fig. 162).

(22) Connect input and output speed sensor connectors (Fig. 162).

40TE AUTOMATIC TRANSAXLE (Continued)

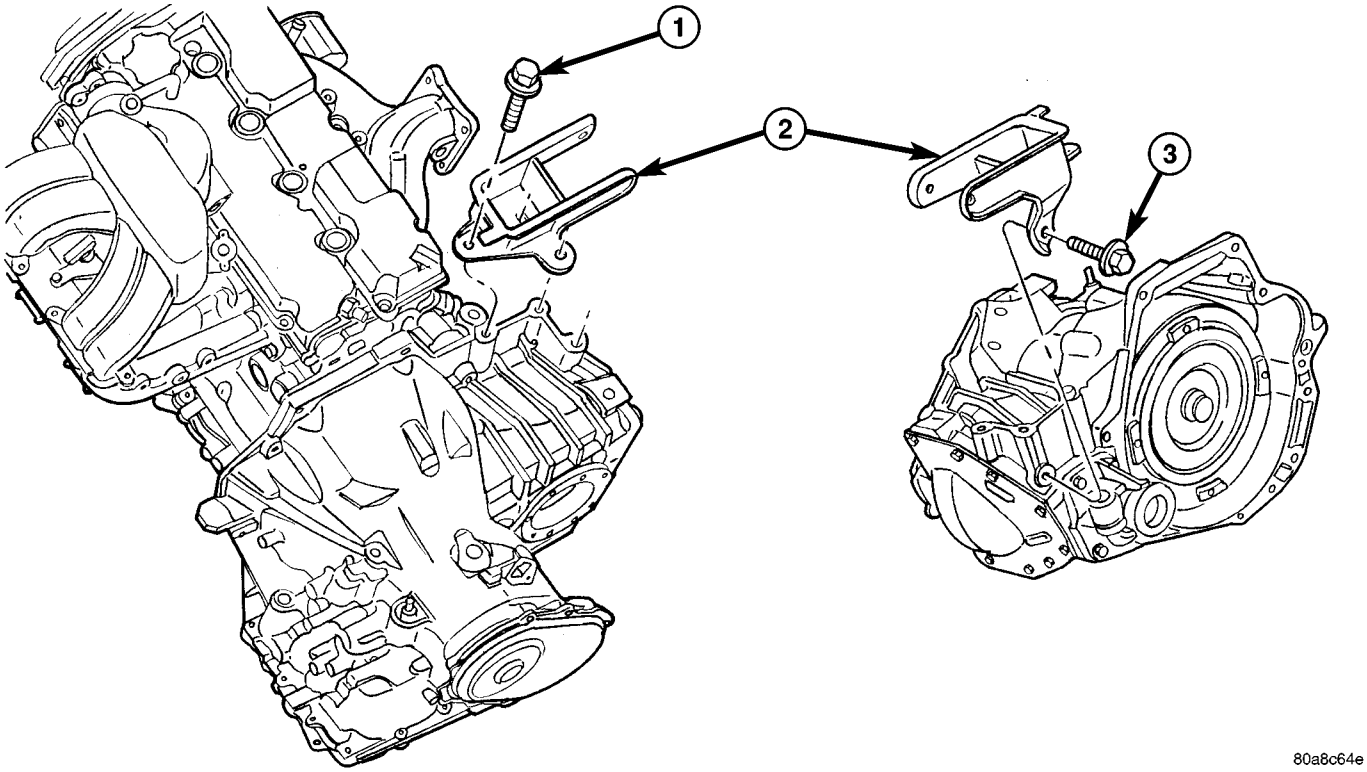

Fig. 160 Rear Mount Bracket - Typical

1 - BOLT - VERTICAL 102 N·m (75 ft. lbs.)
2 - BRACKET - REAR MOUNT
3 - BOLT - HORIZONTAL 102 N·m (75 ft. lbs.)

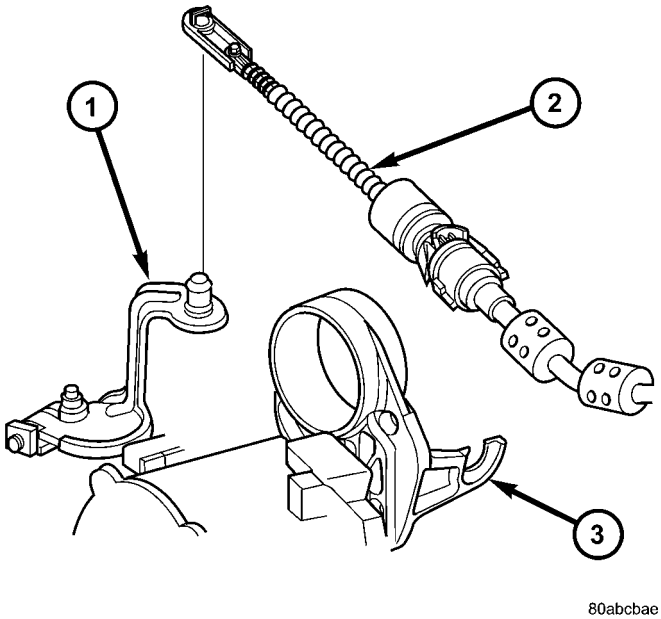

Fig. 161 Gearshift Cable at Transaxle - Typical

1 - MANUAL VALVE LEVER
2 - GEAR SHIFT CABLE
3 - UPPER MOUNT BRACKET

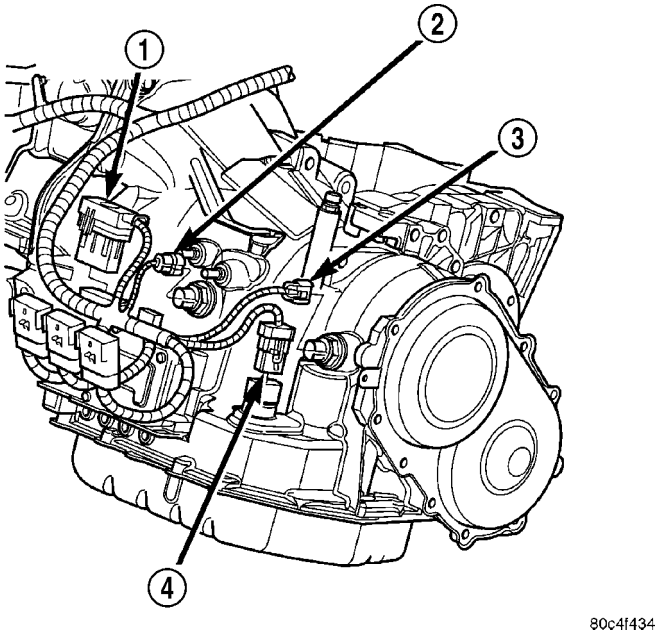

Fig. 162 Component Connector Location - Typical

1 - SOLENOID/PRESSURE SWITCH ASSY. CONNECTOR
2 - INPUT SPEED SENSOR CONNECTOR
3 - OUTPUT SPEED SENSOR CONNECTOR
4 - TRANSMISSION RANGE SENSOR CONNECTOR

40TE AUTOMATIC TRANSAXLE (Continued)

(23) Remove plugs and connect transaxle oil cooler lines. (Refer to 7 - COOLING/TRANSMISSION - STANDARD PROCEDURE)

(24) Remove plug and Install fluid level indicator/ tube assembly.

(25) Install coolant recovery bottle (Fig. 163).

(26) Install battery shield.

(27) Connect battery cables.

(28) Fill transaxle with suitable amount of ATF+4 (Automatic Transmission Fluid—Type 9602). (Refer to 21 - TRANSMISSION/TRANSAXLE/AUTOMATIC - 41TE/FLUID - STANDARD PROCEDURE)

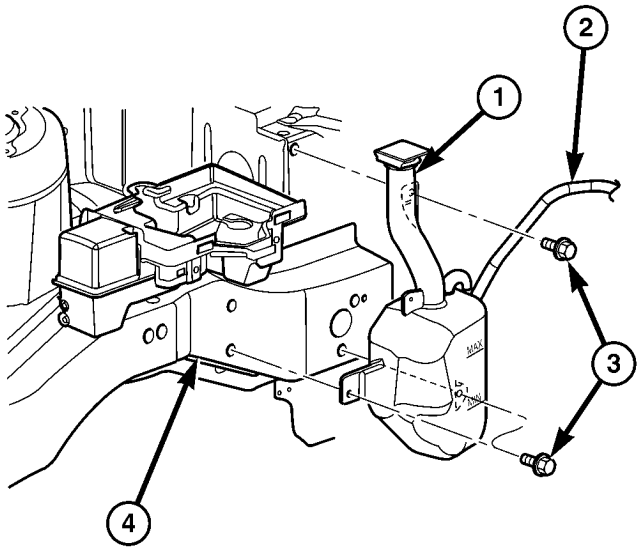

Fig. 163 Coolant Recovery Bottle

1 - COOLANT RECOVERY CONTAINER
2 - HOSE
3 - BOLT
4 - SUB FRAME RAIL

40TE AUTOMATIC TRANSAXLE (Continued)

SCHEMATICS AND DIAGRAMS

4XTE TRANSAXLE HYDRAULIC SCHEMATICS

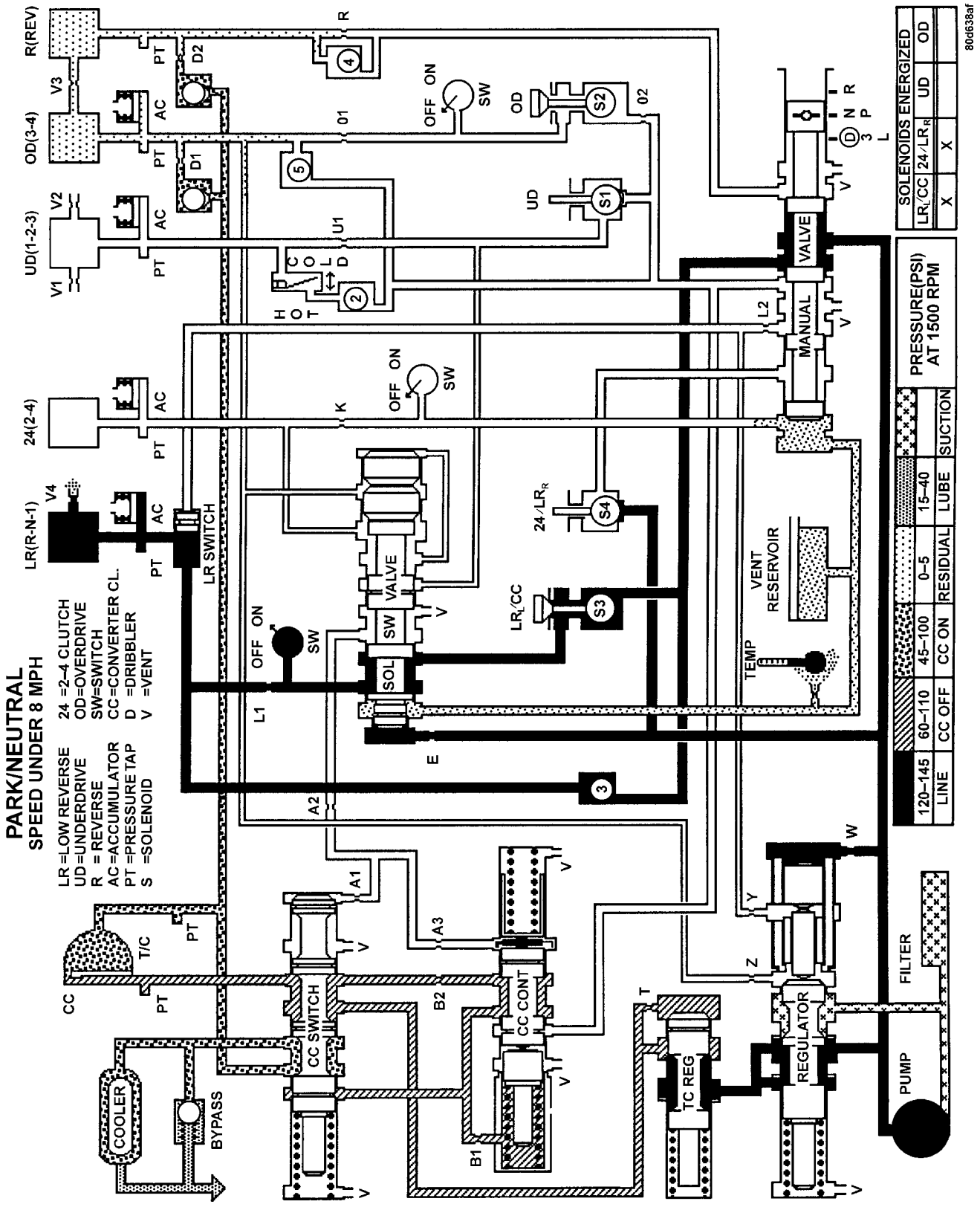

Park/Neutral (Speed Under 8 MPH)

40TE AUTOMATIC TRANSAXLE (Continued)

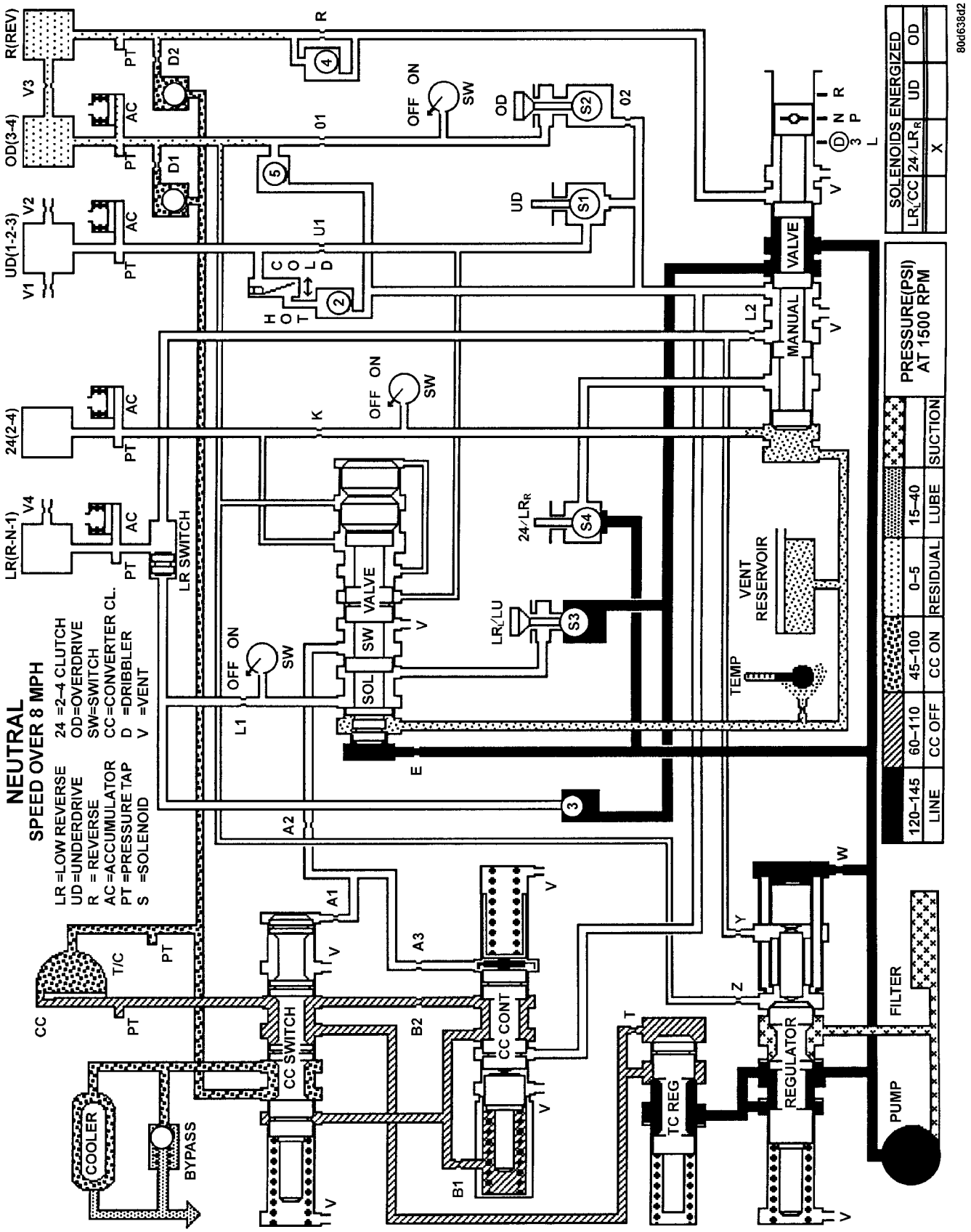

Neutral (Speed Over 8 MPH)

40TE AUTOMATIC TRANSAXLE (Continued)

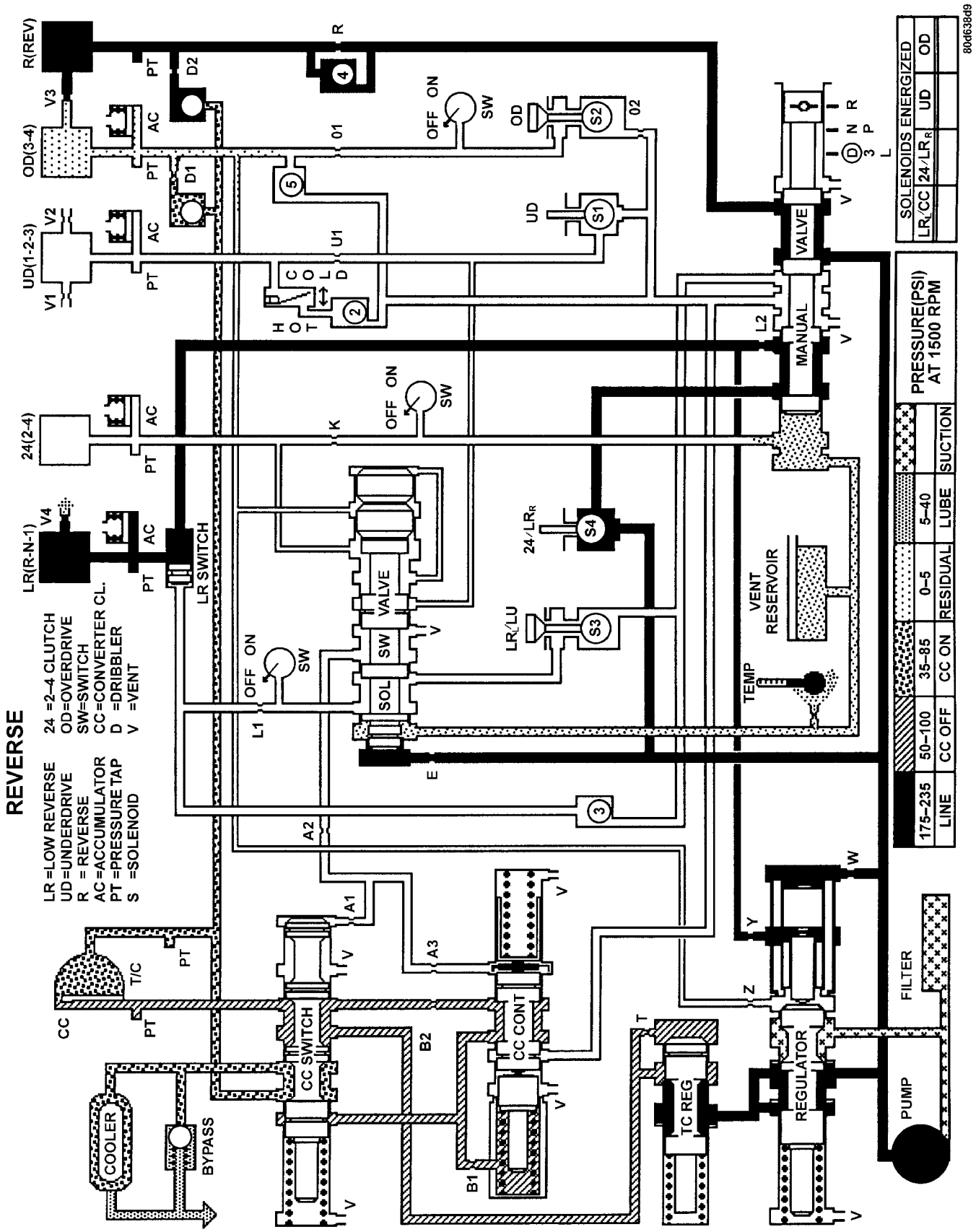

40TE AUTOMATIC TRANSAXLE (Continued)

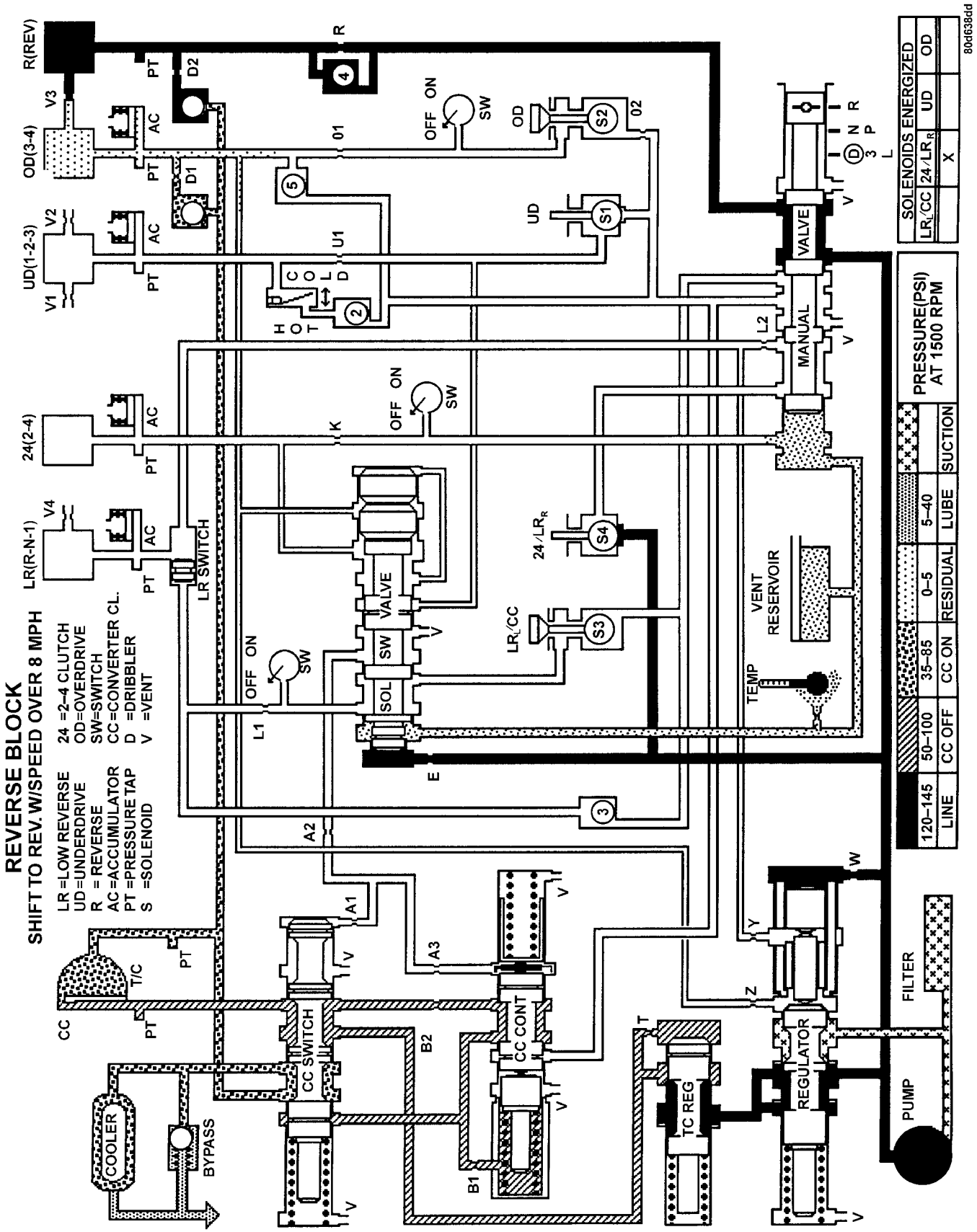

Reverse Block (Shift to Reverse W/Speed Over 8 mph)

40TE AUTOMATIC TRANSAXLE (Continued)

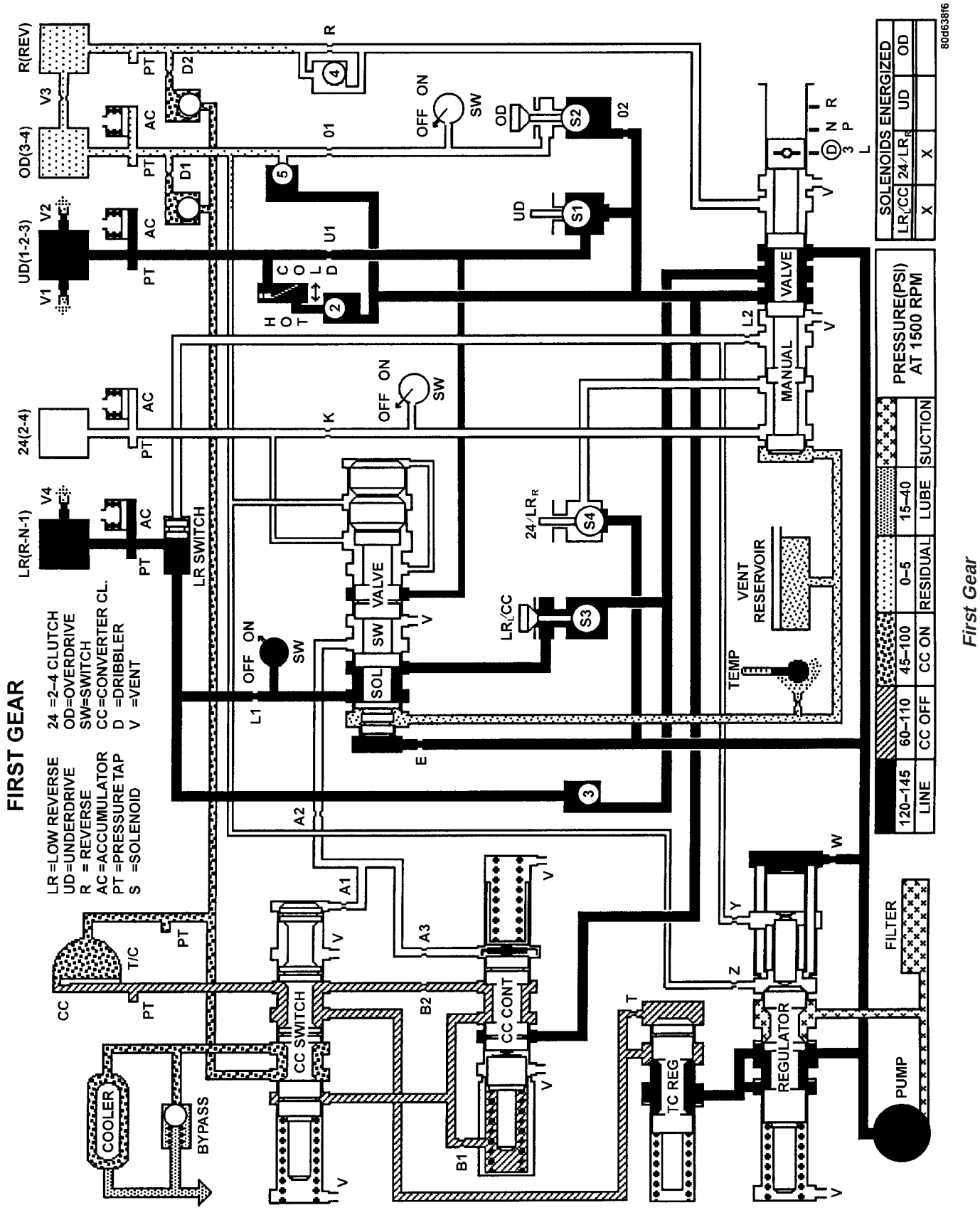

40TE AUTOMATIC TRANSAXLE (Continued)

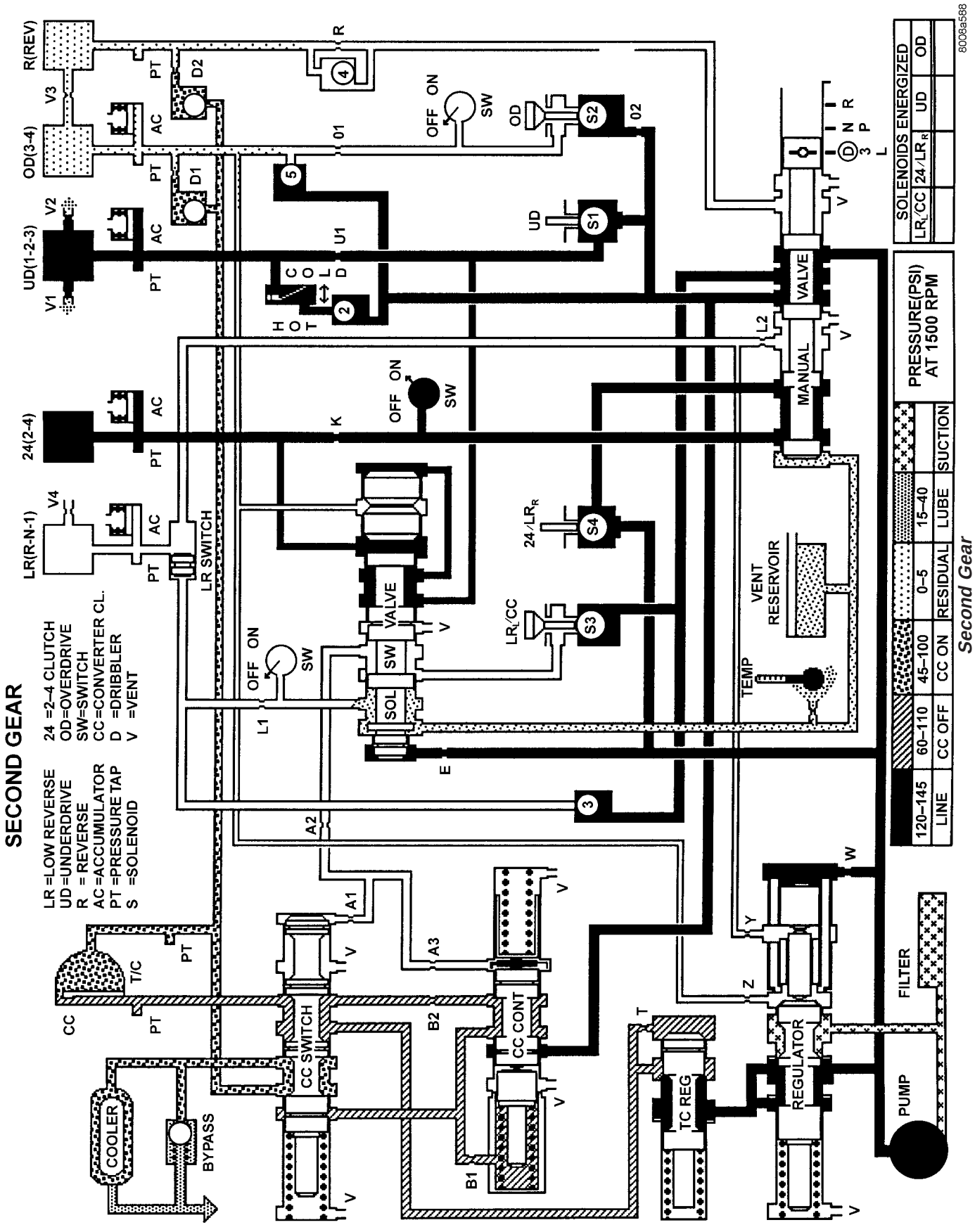

40TE AUTOMATIC TRANSAXLE (Continued)

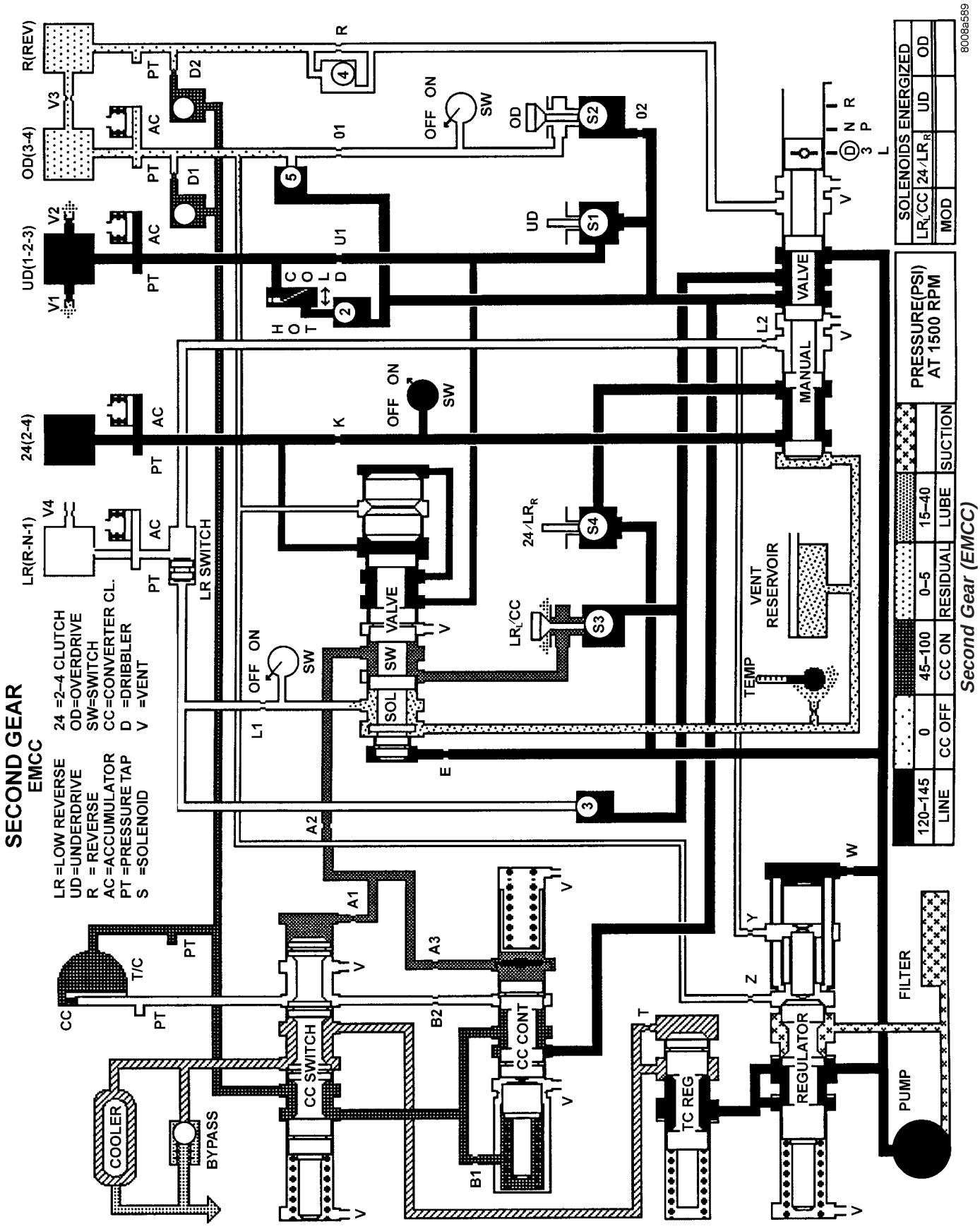

40TE AUTOMATIC TRANSAXLE (Continued)

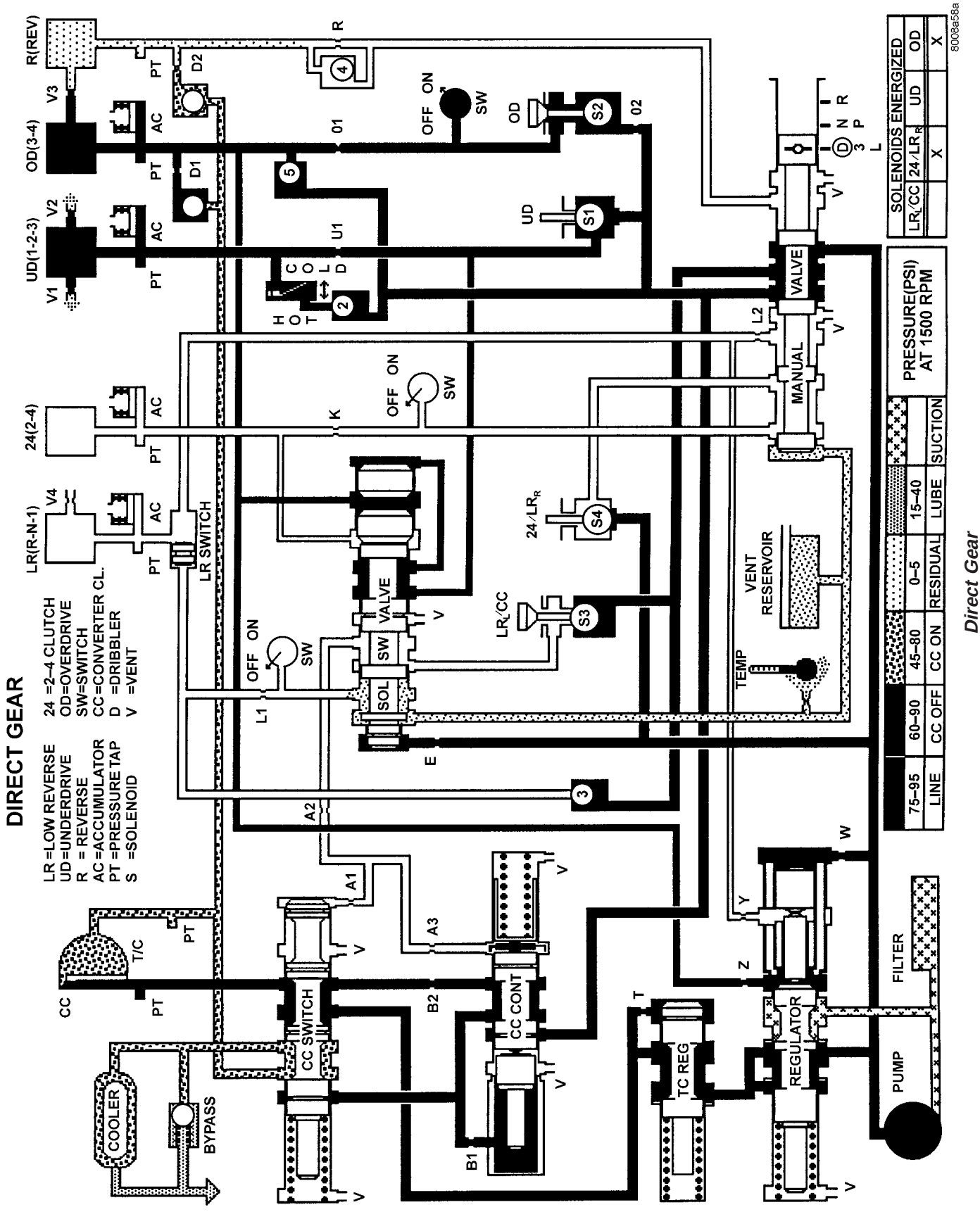

40TE AUTOMATIC TRANSAXLE (Continued)

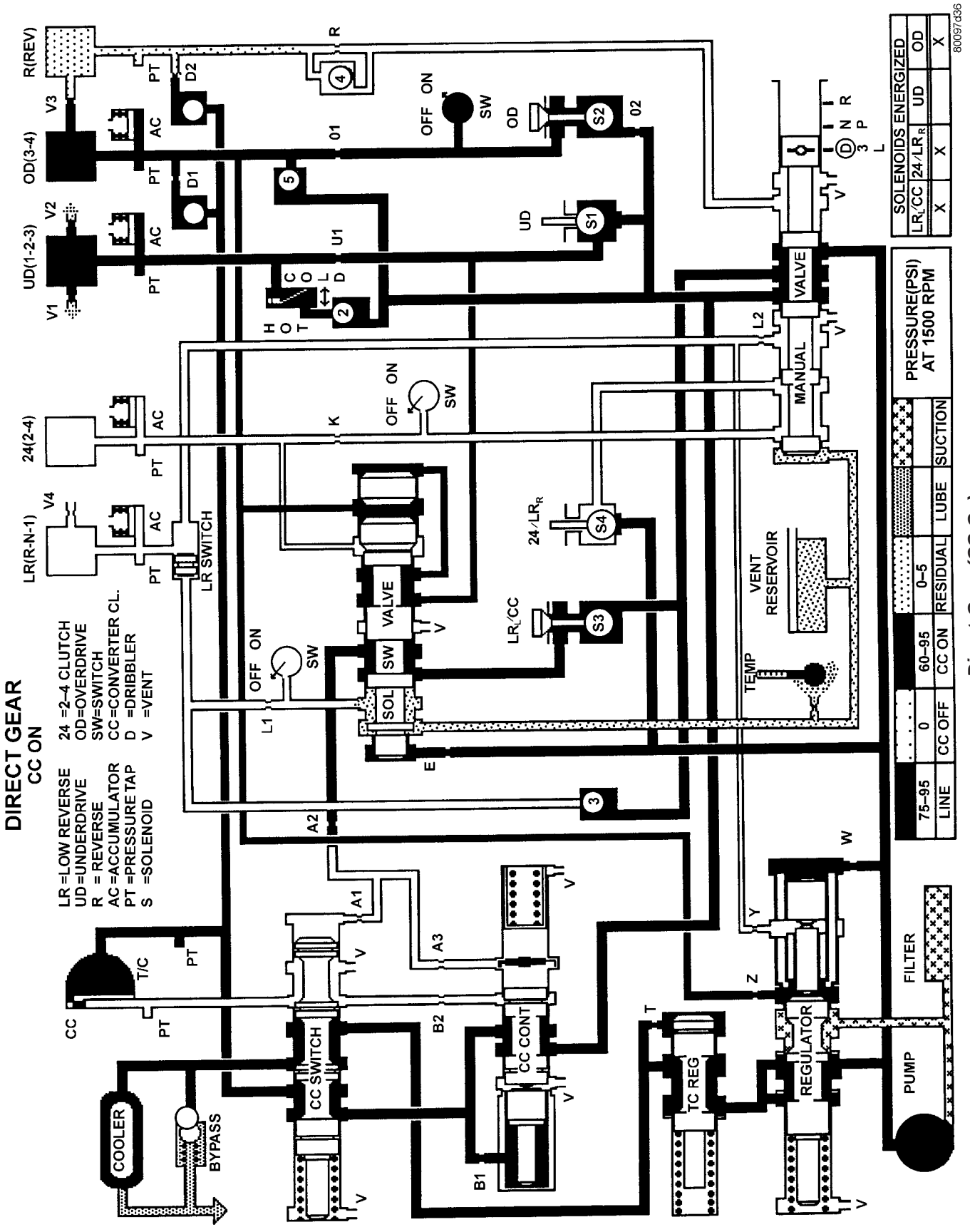

40TE AUTOMATIC TRANSAXLE (Continued)

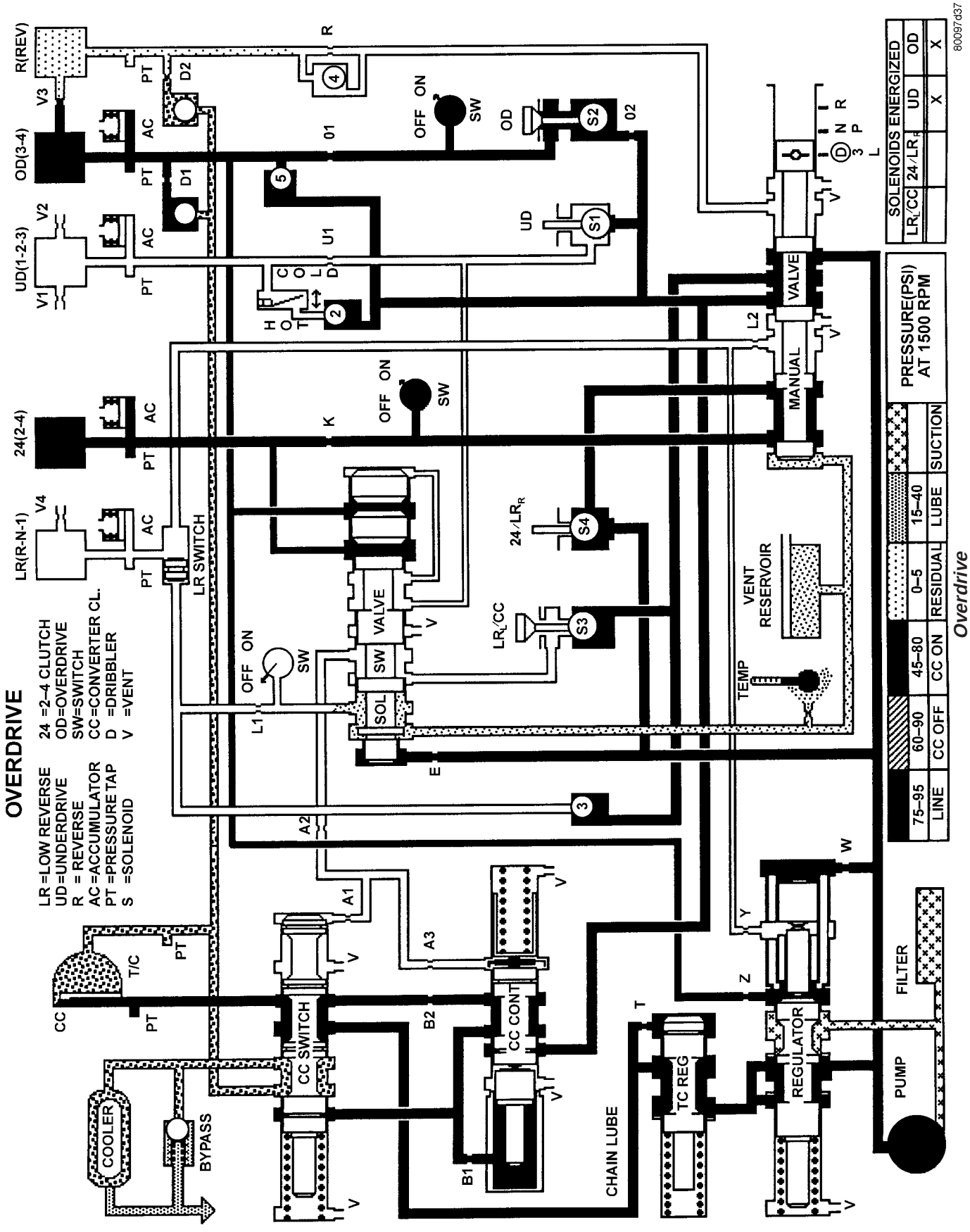

40TE AUTOMATIC TRANSAXLE (Continued)

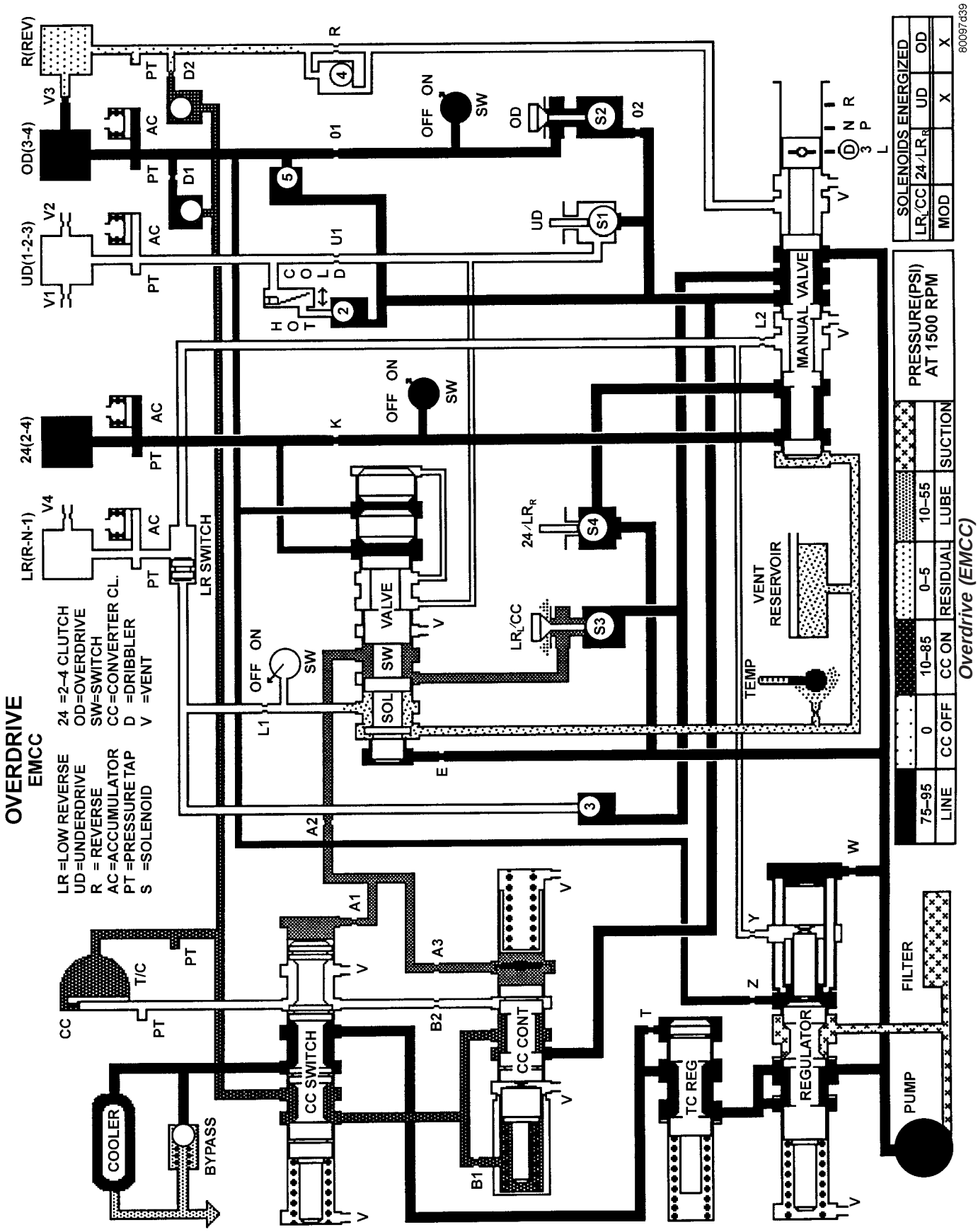

40TE AUTOMATIC TRANSAXLE (Continued)

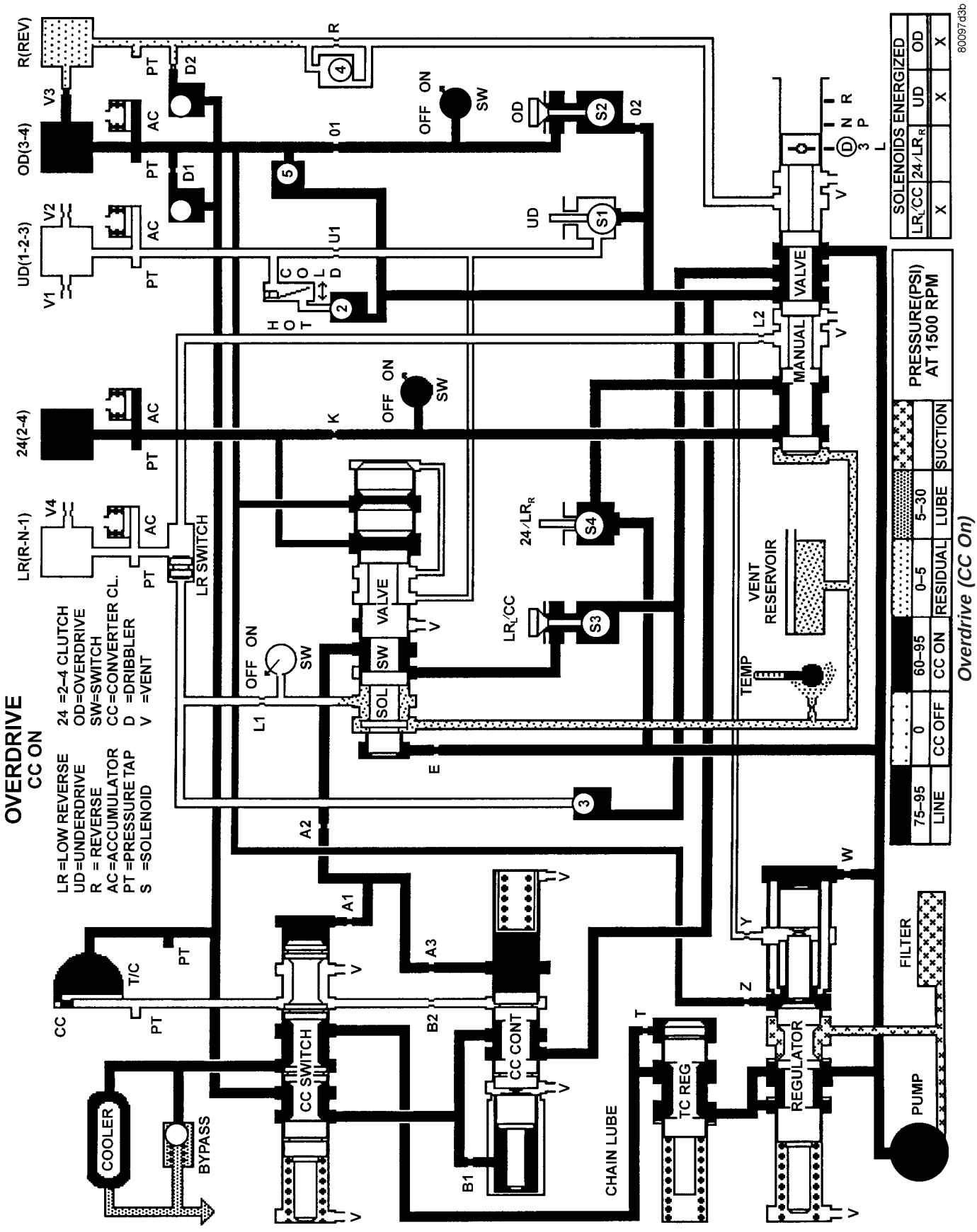

40TE AUTOMATIC TRANSAXLE (Continued)

SPECIFICATIONS - 41TE TRANSAXLE

GENERAL SPECIFICATIONS

DESCRIPTION	SPECIFICATION
Transaxle Type	Fully adaptive, electronically controlled, four speed automatic with torque converter and integral differential
Cooling Method	Air-to-oil heat exchanger
Lubrication	Pump (internal-external gear-type

GEAR RATIOS

DESCRIPTION	SPECIFICATION
First Gear	2.84
Second Gear	1.57
Direct Gear	1.00
Overdrive Gear	0.69
Reverse Gear	2.21

BEARING SETTINGS (END PLAY & TURNING TORQUE)

DESCRIPTION	METRIC	STANDARD
Differential Assembly	0.6-2 N·m	5-18 in. lbs.
Output Hub	0.3-2 N·m	3-8 in. lbs.
Transfer Shaft (End Play)	0.051-0.102 mm	0.002-0.004 in.
Overall Drag At Output Hub	0.3-1.9 N·m	3-16 in. lbs.

CLUTCH CLEARANCES

DESCRIPTION	METRIC	STANDARD
Low/Rev Clutch (Select Reaction Plate)	0.89-1.47 mm	0.035-0.058 in.
Two/Four Clutch (No Selection)	0.76-2.64 mm	0.030-0.104 in.
Reverse Clutch (Select Snap Ring)	0.89-1.37 mm	0.035-0.054 in.
Overdrive Clutch (No Selection)	1.07-3.25 mm	0.042-0.128 in.
Underdrive Clutch (Select Pressure Plate)	0.94-1.50 mm	0.037-0.059 in.

OIL PUMP CLEARANCES

DESCRIPTION	METRIC	STANDARD
Outer Gear-to-Crescent	0.060-0.298 mm	0.0023-0.0117 in.
Inner Gear-to-Crescent	0.093-0.385 mm	0.0036-0.0151 in.
Outer Gear-to-Pocket	0.089-0.202 mm	0.0035-0.0079 in.
Outer Gear Side Clearance	0.020-0.046 mm	0.0008-0.0018 in.
Inner Gear Side Clearance	0.020-0.046 mm	0.0008-0.0018 in.

INPUT SHAFT

DESCRIPTION	METRIC	SPECIFICATION
End Play	0.127-0.635mm	0.005-0.025 in.

TORQUE SPECIFICATIONS

DESCRIPTION	N·m	Ft. Lbs.	In. Lbs.
Bolt, Differential Cover-to-Case	19	—	165
Bolt, Differential Ring Gear-to-Case	95	70	—
Bolt, Differential Bearing Retainer-to-Case	28	21	—
Bolt, Driveplate-to-Crankshaft	95	70	—
Bolt, Extension Housing/ Plate-to-Case	28	21	—
Bolt, Oil Pan-to-Case	19	—	165
Bolt, Output Gear	271	200	—
Bolt, Output Gear Stirrup/Strap	23	17	—
Bolt, Oil Pump-to-Case	27	20	—
Bolt, Reaction Support-to-Case	27	20	—
Bolt, Solenoid/Pressure Switch Assy.-to-Case	12	—	110
Bolt, Torque Converter-to-Driveplate	75	55	—
Bolt, Transfer Gear Cover	20	—	175
Bolt, Valve Body-to-Case	12	—	105
Fitting, Oil Cooler Line	12	—	105
Nut, Tranfer Gear	271	200	—
Tap, Transaxle Pressure	5	—	45
Screw, L/R Clutch Retainer	5	—	45
Screw, Solenoid/Pressure Switch Assy. Connector	4	—	35
Screw, Valve Body-to-Transfer Plate	5	—	45
Sensor, Input Speed	27	20	—
Sensor, Output Speed	27	20	—
Sensor, Transmission Range Sensor	5	—	45

SPECIAL TOOLS

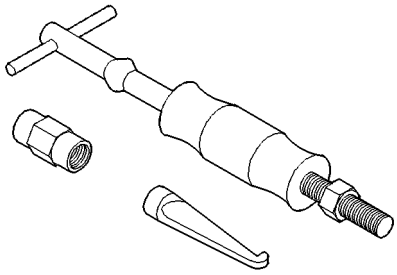

Puller C-637

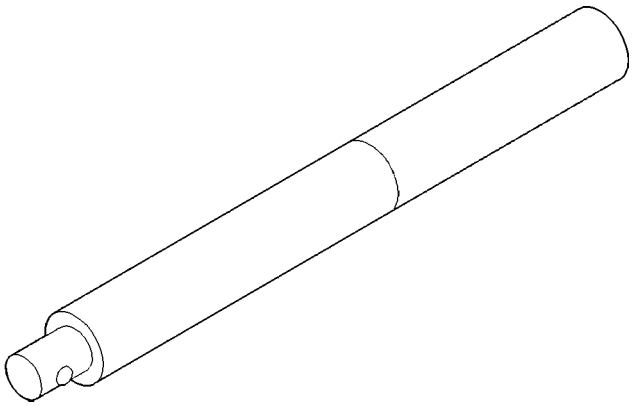

Universal Handle C-4171

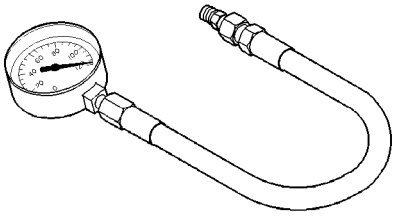

Pressure Gauge (High) C-3293SP

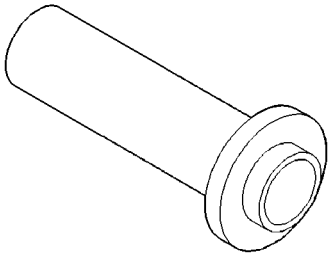

Seal Installer C-4193A

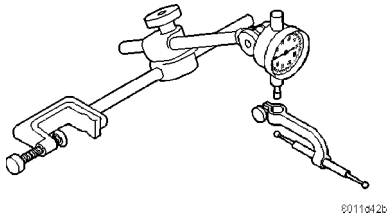

Dial Indicator C-3339

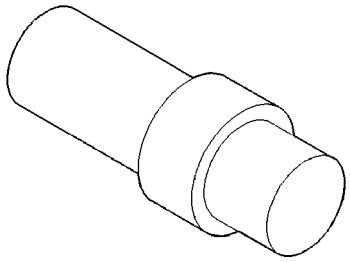

Adapter C-4996

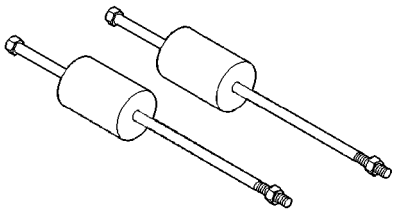

Oil Pump Puller C-3752

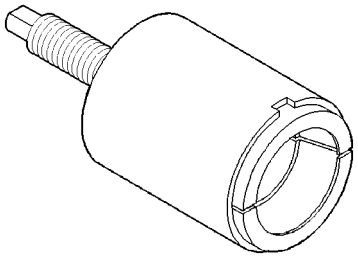

Remover Kit L-4406

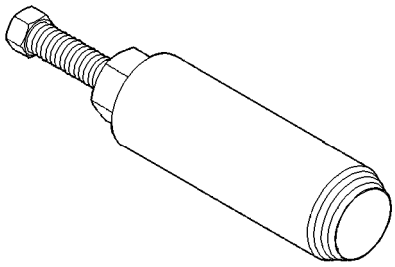

Seal Puller C-3981B

40TE AUTOMATIC TRANSAXLE (Continued)

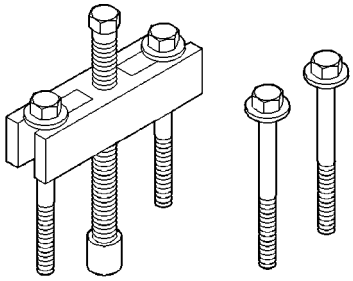

Gear Puller L-4407A

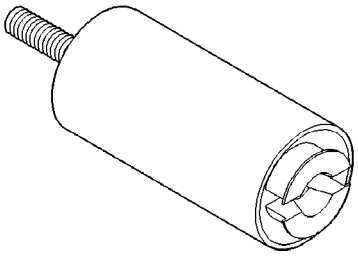

Special Jaw Set L-4518

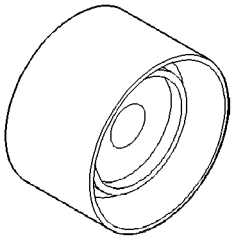

Bearing Installer L-4410

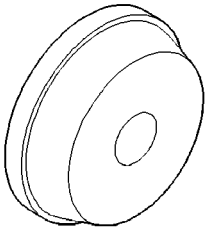

Installer L-4520

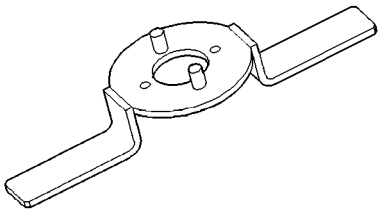

Gear Checking Plate L-4432

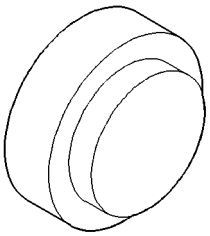

Thrust Button L-4539-2

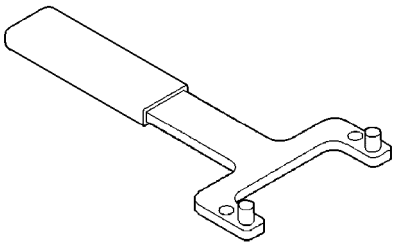

Bearing Puller L-4435

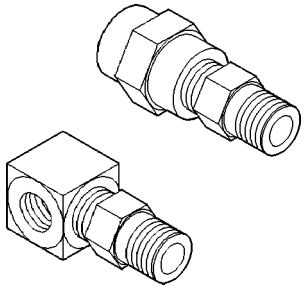

Adapter L-4559

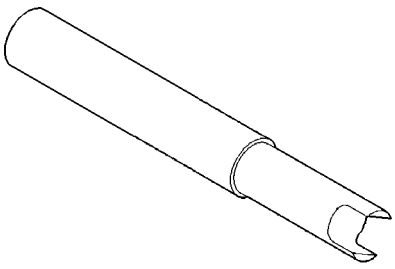

Differential Tool L-4436A

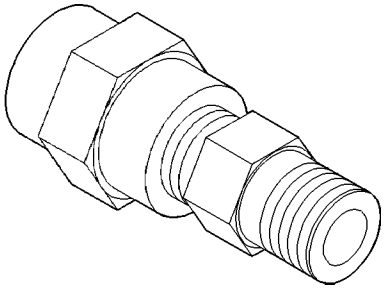

Adapter L-4559-2

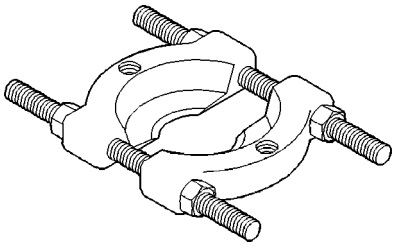

Bearing Splitter P-334

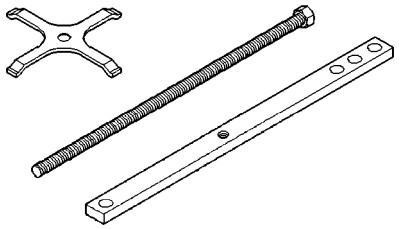

Compressor 5058A

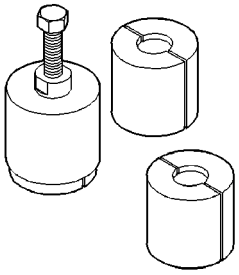

Puller Set 5048

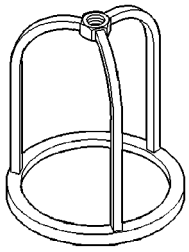

Compressor 5059-A

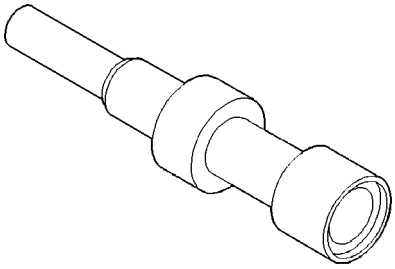

Remover/Installer 5049-A

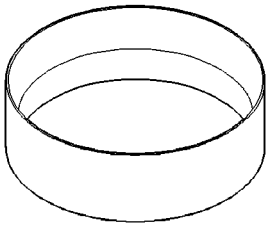

Installer 5067

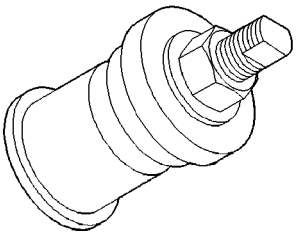

Installer 5050A

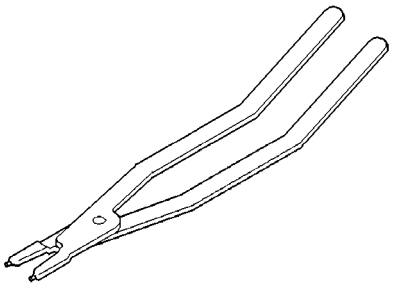

Pliers 6051

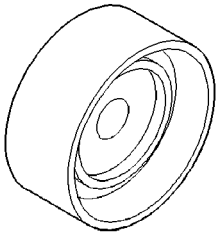

Installer 5052

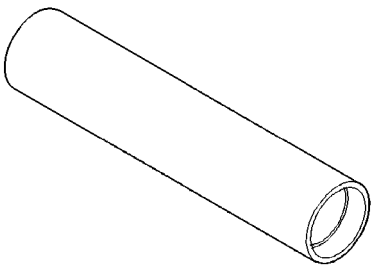

Installer 6052

40TE AUTOMATIC TRANSAXLE (Continued)

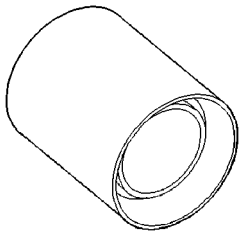

Installer 6053

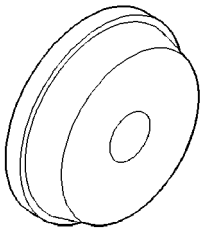

Installer 6061

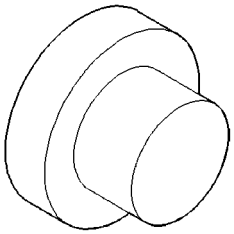

Button 6055

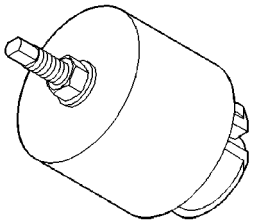

Remover 6062-A

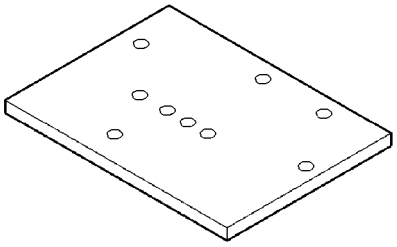

Plate 6056

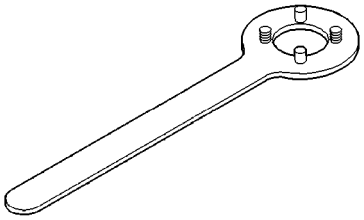

Holder 6259

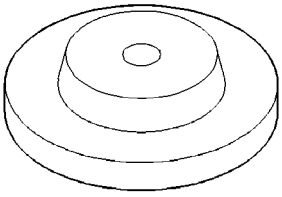

Disk 6057

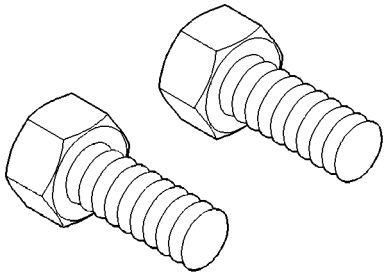

Bolt 6260

40TE AUTOMATIC TRANSAXLE (Continued)

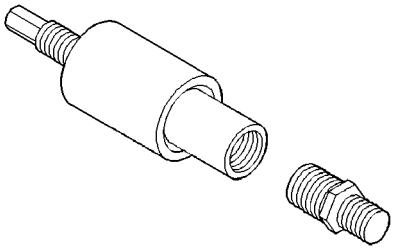

Installer 6261

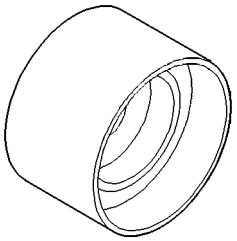

Installer 6536-A

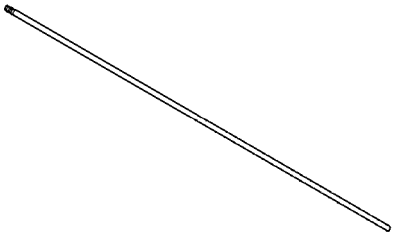

Tip 6268

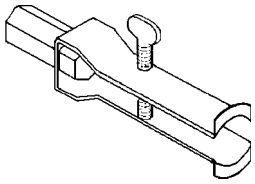

Puller 7794-A

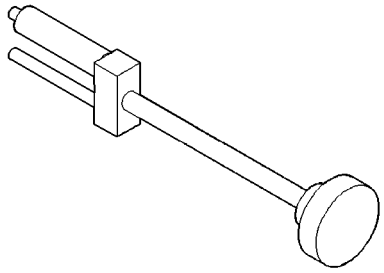

Remover/Installer 6301

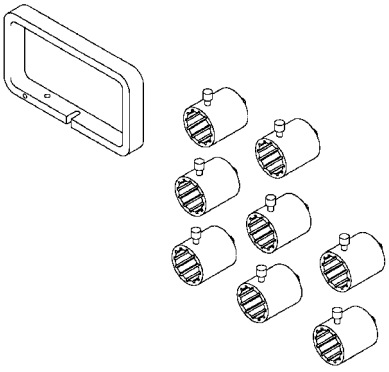

End Play Socket Set 8266

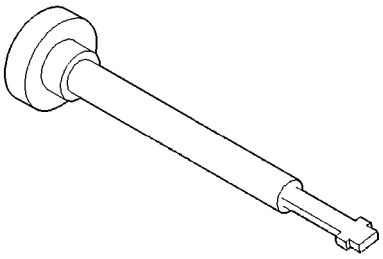

Remover/Installer 6302

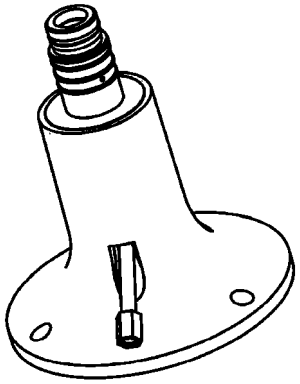

Input Clutch Pressure Fixture 8391

ACCUMULATOR

DESCRIPTION

The 4XTE underdrive, overdrive, low/reverse, and 2/4 clutch hydraulic circuits each contain an accumulator. An accumulator typically consists of a piston, return spring(s), and a cover or plug. The overdrive and underdrive accumulators are located within the transaxle case, and are retained by the valve body (Fig. 164).

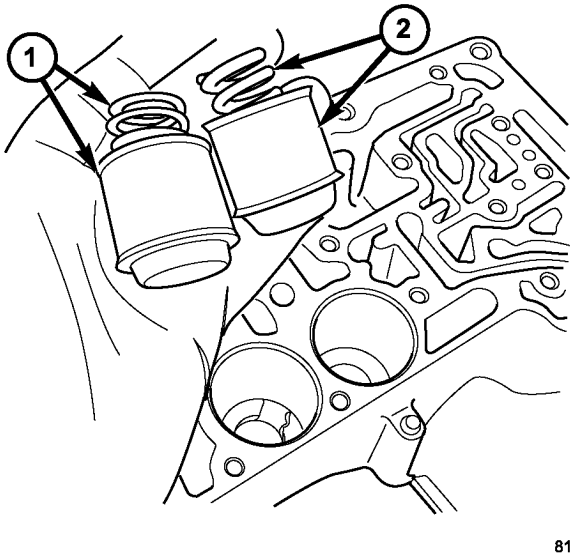

Fig. 164 Underdrive and Overdrive Accumulators

1 - OVERDRIVE PISTON AND SPRING
2 - UNDERDRIVE PISTON AND SPRING

The low reverse accumulator (Fig. 165) is also located within the transaxle case, but the assembly is retained by a cover and a snap-ring.

The 2/4 accumulator is located in the valve body. It is retained by a cover and retaining screws (Fig. 166).

OPERATION

The function of an accumulator is to cushion the application of a frictional clutch element. When pressurized fluid is applied to a clutch circuit, the application force is dampened by fluid collecting in the respective accumulator chamber against the piston and spring(s). The intended result is a smooth, firm clutch application.

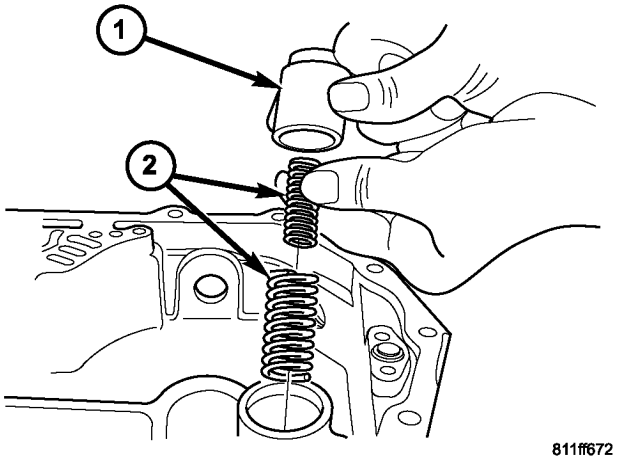

Fig. 165 Low/Reverse Accumulator

1 - PISTON
2 - RETURN SPRINGS

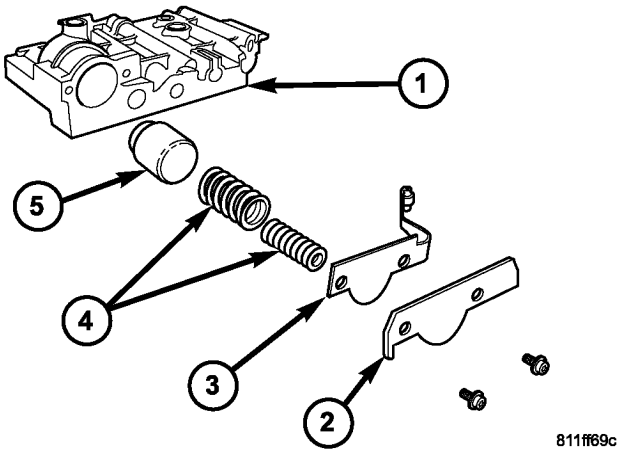

Fig. 166 2/4 Accumulator Assembly

1 - VALVE BODY
2 - RETAINER PLATE
3 - DETENT SPRING
4 - RETURN SPRINGS
5 - PISTON

DRIVING CLUTCHES

DESCRIPTION

Three hydraulically applied input clutches are used to drive planetary components. The underdrive, overdrive, and reverse clutches are considered input clutches and are contained within the input clutch assembly (Fig. 167). The input clutch assembly also contains:

- Input shaft
- Input hub
- Clutch retainer
- Underdrive piston
- Overdrive/reverse piston
- Overdrive hub
- Underdrive hub

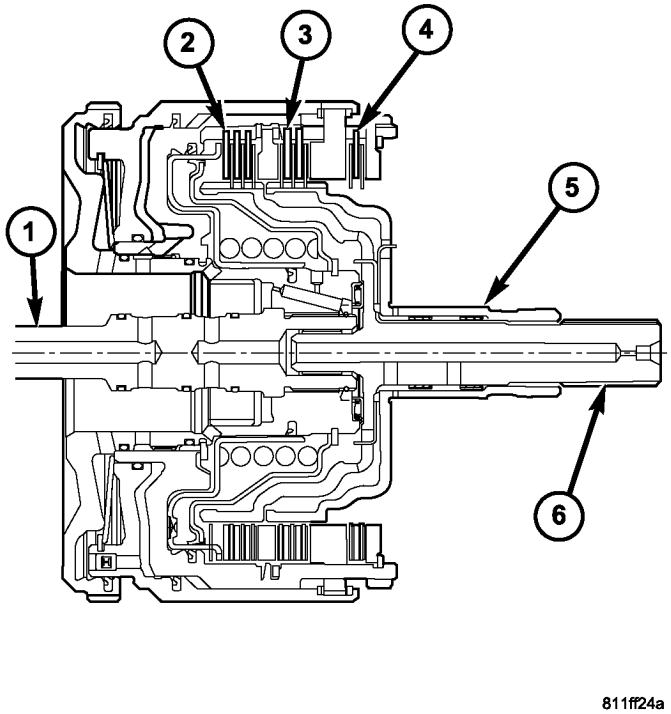

Fig. 167 Input Clutch Assembly

1 - INPUT SHAFT
2 - UNDERDRIVE CLUTCH
3 - OVERDRIVE CLUTCH
4 - REVERSE CLUTCH
5 - OVERDRIVE SHAFT
6 - UNDERDRIVE SHAFT

OPERATION

The three input clutches are responsible for driving different components of the planetary geartrain.

NOTE: Refer to the "Elements In Use" chart in Diagnosis and Testing for a collective view of which clutch elements are applied at each position of the selector lever.

UNDERDRIVE CLUTCH

The underdrive clutch is hydraulically applied in first, second, and third (direct) gears by pressurized fluid against the underdrive piston. When the underdrive clutch is applied, the underdrive hub drives the rear sun gear.

OVERDRIVE CLUTCH

The overdrive clutch is hydraulically applied in third (direct) and overdrive gears by pressurized fluid against the overdrive/reverse piston. When the overdrive clutch is applied, the overdrive hub drives the front planet carrier.

REVERSE CLUTCH

The reverse clutch is hydraulically applied in reverse gear only by pressurized fluid against the overdrive/reverse piston. When the reverse clutch is applied, the front sun gear assembly is driven.

FINAL DRIVE

DESCRIPTION

The 4XTE differential is a conventional open design. It consists of a ring gear and a differential case. The differential case consists of pinion and side gears, and a pinion shaft. The differential case is supported in the transaxle by tapered roller bearings (Fig. 168).

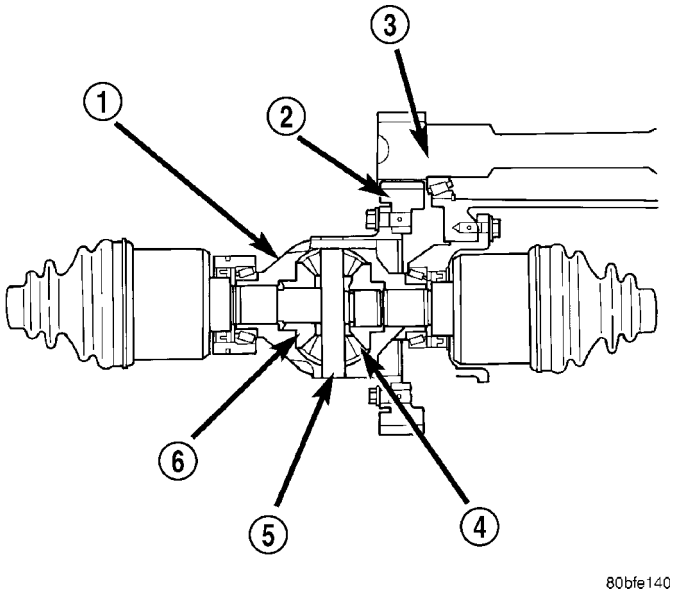

Fig. 168 Differential Assembly

1 - DIFFERENTIAL CASE
2 - RING GEAR
3 - TRANSFER SHAFT
4 - PINION GEAR
5 - PINION SHAFT
6 - SIDE GEAR

FINAL DRIVE (Continued)

OPERATION

The differential assembly is driven by the transfer shaft by way of the differential ring gear. The ring gear drives the differential case, and the case drives the driveshafts through the differential gears. The differential pinion and side gears are supported in the case by thrust washers and a pinion shaft. Differential pinion and side gears make it possible for front tires to rotate at different speeds while cornering.

DISASSEMBLY

NOTE: The differential is serviced as an assembly. The only parts that are serviceable within the differential are the differential bearing cups and cones. If any other part fails within the differential, you must replace the differential assembly along with the transfer shaft.

The transfer shaft should be removed for differential repair and bearing turning torque checking.

(1) Remove the differential cover and bolts (Fig. 169) (Fig. 170).

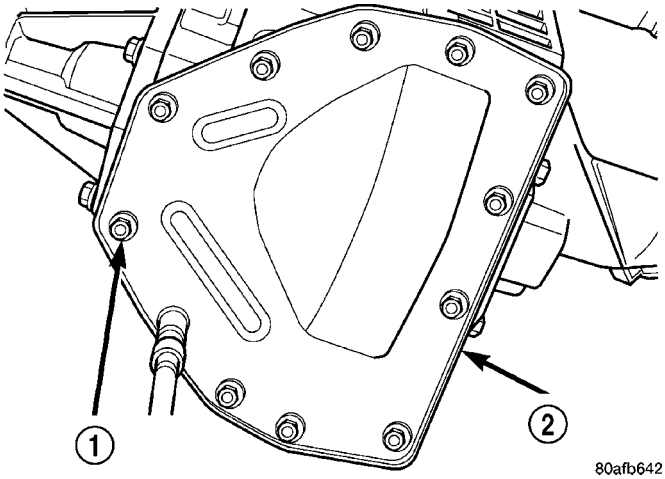

Fig. 169 Differential Cover Bolts

1 - DIFFERENTIAL COVER BOLTS
2 - DIFFERENTIAL COVER

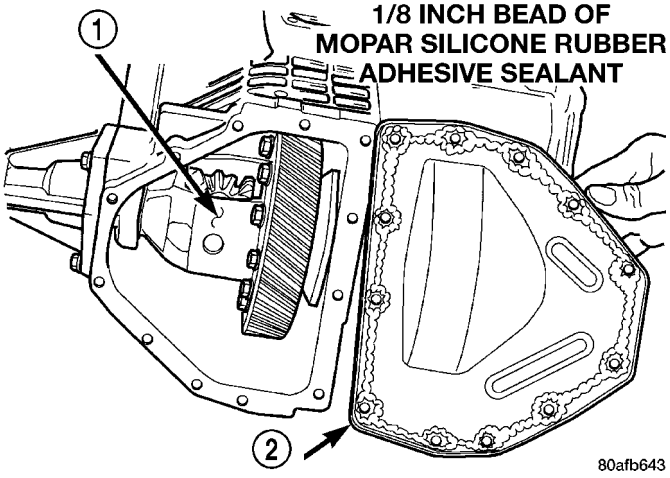

Fig. 170 Remove Differential Cover

1 - DIFFERENTIAL ASSEMBLY
2 - DIFFERENTIAL COVER

(2) Remove the differential bearing retainer and bolts (Fig. 171) (Fig. 172).

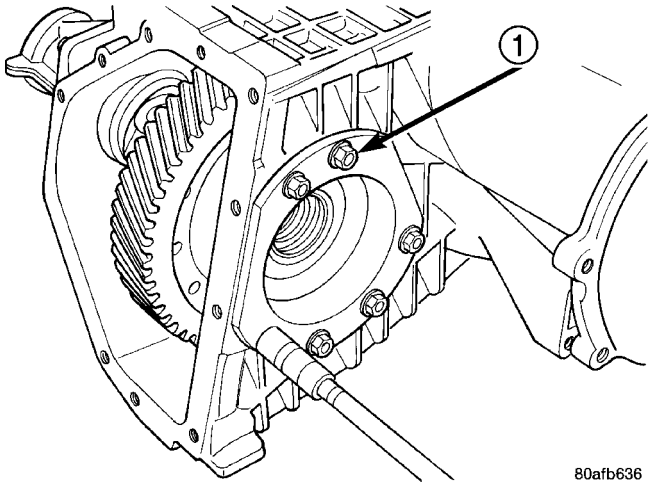

Fig. 171 Differential Retainer Bolts

1 - DIFFERENTIAL RETAINER BOLTS

FINAL DRIVE (Continued)

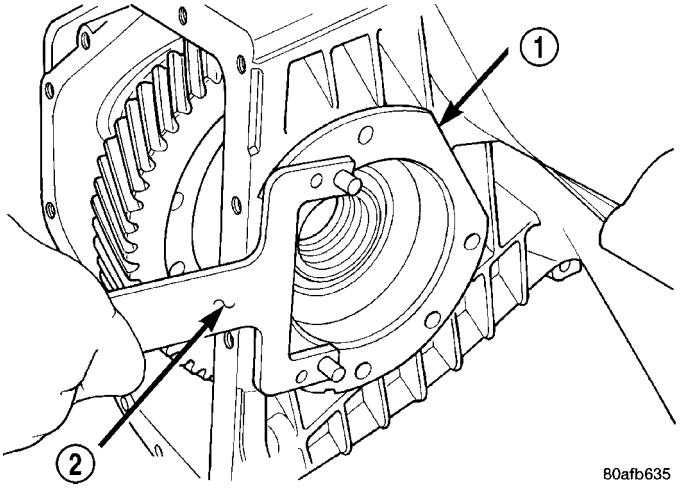

Fig. 172 Remove Bearing Retainer

1 - DIFFERENTIAL BEARING RETAINER
2 - TOOL L-4435

(3) Using a plastic hammer, remove extension housing/adapter plate on the right side of the transaxle.

WARNING: HOLD ONTO DIFFERENTIAL ASSEMBLY TO PREVENT IT FROM ROLLING OUT OF HOUSING.

(4) Remove differential assembly.

(5) Set up dial indicator set C-3339 and tool C-4996 as shown in (Fig. 173) (Fig. 174) to measure side gear end play. **Side gear end play must be within 0.001-0.013 in.**

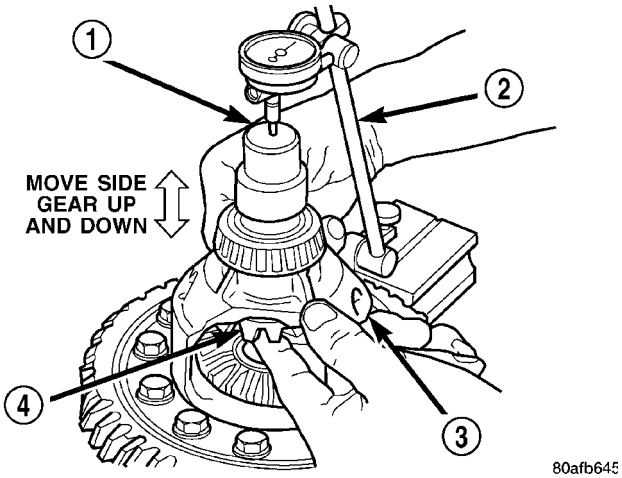

Fig. 173 Checking Side Gear End Play (Extension Housing Side)

1 - SPECIAL TOOL C-4996 (NOTE POSITION)
2 - DIAL INDICATOR SET
3 - DIFFERENTIAL ASSEMBLY
4 - SIDE GEAR

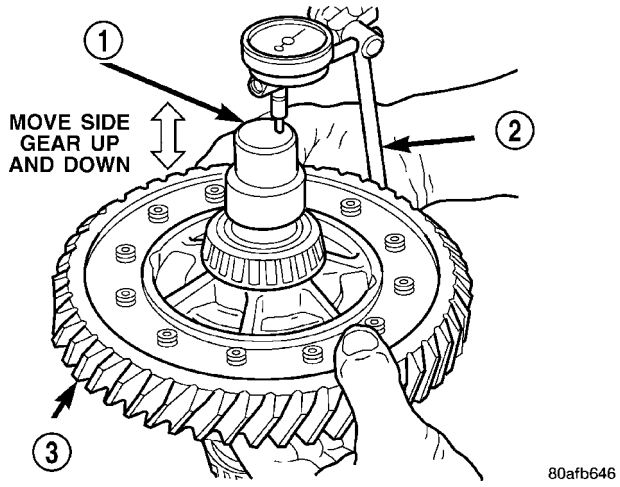

Fig. 174 Checking Side Gear End Play (Ring Gear Side)

1 - SPECIAL TOOL C-4996 (NOTE POSITION)
2 - DIAL INDICATOR SET
3 - DIFFERENTIAL ASSEMBLY

(6) Use Miller Special Tool 5048, 5048-3 Collets, and L-4539-2 Button to remove the differential bearing cone on the extension housing side.

FINAL DRIVE (Continued)

(7) Use Miller Special Tool 5048, 5048-4 Collets, and L-4539-2 Button to remove the differential bearing cone on the bearing retainer side (Fig. 175) (Fig. 176) (Fig. 177).

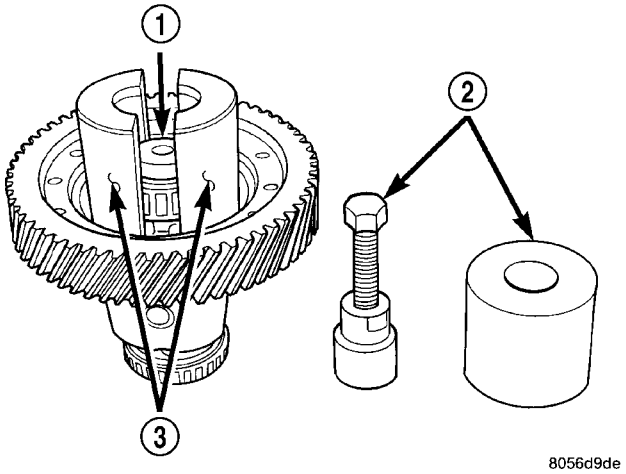

Fig. 175 Position Button and Collets Onto Differential and Bearing (Ring Gear Side)

1 - SPECIAL TOOL L-4539-2
2 - SPECIAL TOOL 5048
3 - SPECIAL TOOL 5048-4

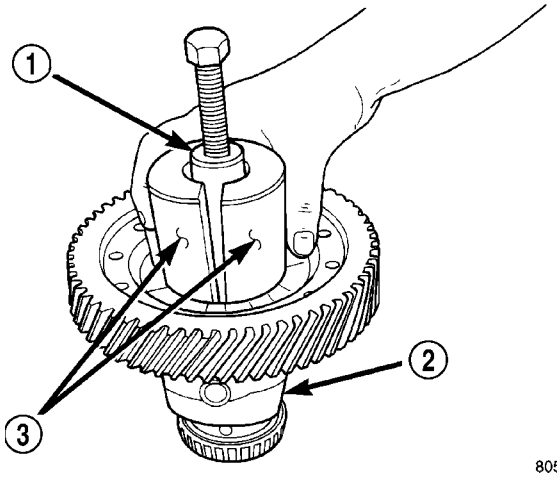

Fig. 176 Position Tool 5048 Over Button and Collets at Differential Bearing (Ring Gear Side)

1 - SPECIAL TO0L 5048
2 - DIFFERENTIAL
3 - SPECIAL TOOL 5048-4

(8) Using Miller Special Tool L-4518, remove the differential bearing race from the extension housing/ adapter plate.

(9) Using Miller Special Tool 6062A, remove the differential bearing race from the bearing retainer (Fig. 178) (Fig. 179).

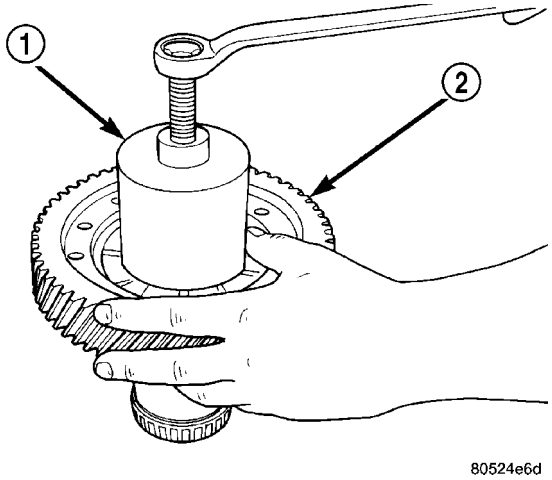

Fig. 177 Remove Differential Bearing Cone (Ring Gear Side)

1 - SPECIAL TOOL 5048
2 - RING GEAR

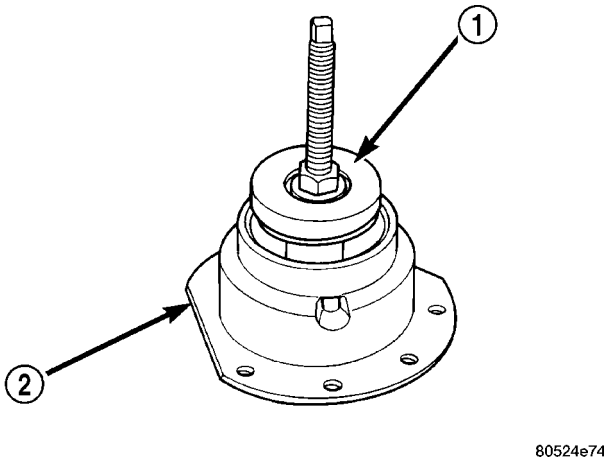

Fig. 178 Position Bearing Cup Remover Tool in Retainer

1 - SPECIAL TOOL 6062A
2 - DIFFERENTIAL BEARING RETAINER

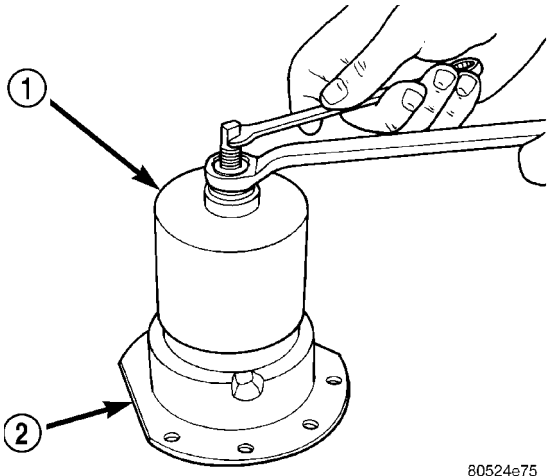

Fig. 179 Remove Bearing Cup

1 - SPECIAL TOOL 6062A
2 - DIFFERENTIAL BEARING RETAINER

FINAL DRIVE (Continued)

DIFFERENTIAL SERVICE TOOLS

COMPONENT	REMOVER	INSTALLER
Diff. Bear. On Retainer Side	5048, 5048-4 Collets, L-4539-2 Button	5052, C-4171
Diff. Bear. On Ext. Hous. Side	5048, 5048-3 Collets, L-4539-2 Button	L-4410, C-4171
Diff. Race. On Retainer Side	6062-A	6061, C-4171
Diff. Race. On Ext. Hous. Side	L-4518	L-4520, C-4171
Extension Housing Seal	7794-A, C-637 Slide Hammer	L-4520, C-4171
Bearing Retainer Seal	794-A, C-637 Slide Hammer	L-4520, C-4171

ASSEMBLY

NOTE: The differential is serviced as an assembly. The only parts that are serviceable within the differential are the differential bearing cups and cones. If any other part fails within the differential, you must replace the differential assembly along with the transfer shaft.

NOTE: Use Mopar® ATF RTV (MS-GF41), or equivalent, on retainer and extension housing/adapter plate to seal to case.

(1) Using Miller Special Tool L-4410, and C-4171, install differential bearing to differential (extension housing side) (Fig. 180).

(2) Using Miller Special Tool 5052 and C-4171, install differential bearing to differential (bearing retainer side).

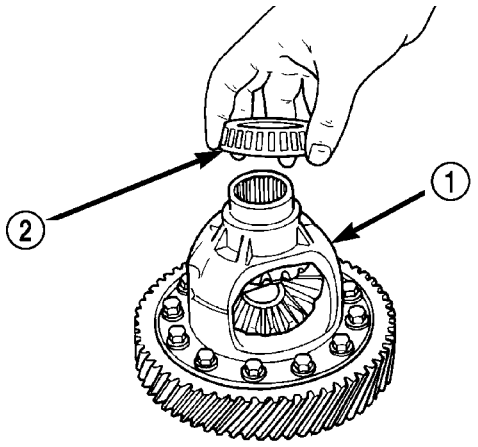

Fig. 180 Position Bearing Cone Onto Differential

1 - DIFFERENTIAL ASSEMBLY
2 - DIFFERENTIAL BEARING

(3) Using Miller Special Tool 6061 and C-4171, install differential bearing race to bearing retainer (Fig. 181).

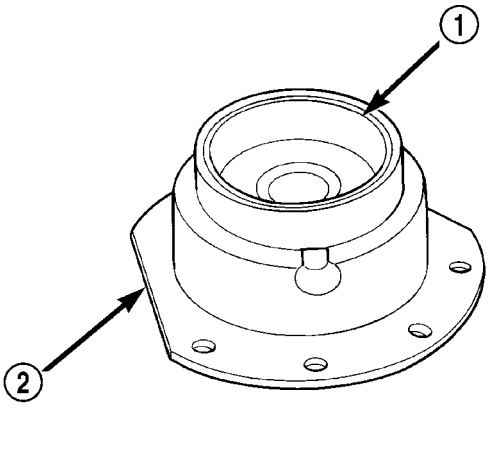

Fig. 181 Differential Bearing Retainer

1 - DIFFERENTIAL BEARING CUP
2 - DIFFERENTIAL BEARING RETAINER

(4) Using Miller Special Tool L–4520 and C-4171, install differential bearing cup to extension housing.

(5) Measure and adjust differential bearing preload (Refer to 21 - TRANSMISSION/TRANSAXLE/ AUTOMATIC - 41TE/FINAL DRIVE - ADJUSTMENTS) .

(6) Install differential assembly to case. Install extension housing/adapter plate and bearing retainer.

FINAL DRIVE (Continued)

(7) Install bearing retainer with a bead of Mopar® ATF RTV (MS-GF41) and torque bolts (Fig. 182) to 28 N·m (250 in. lbs.).

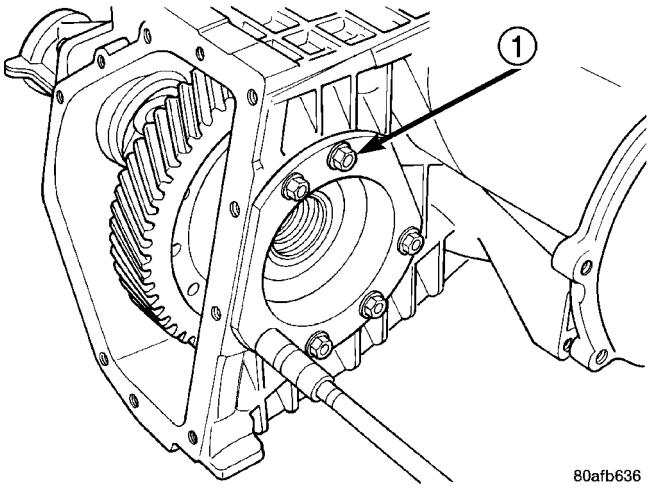

Fig. 182 Differential Retainer Bolts

1 - DIFFERENTIAL RETAINER BOLTS

(8) Install extension housing/adapter plate with a bead of Mopar® ATF RTV (MS-GF41) and torque bolts to 28 N·m (250 in. lbs.).

(9) Install differential cover with a bead of Mopar® ATF RTV (MS-GF41) (Fig. 183) and torque bolts (Fig. 184) to 28 N·m (250 in. lbs.).

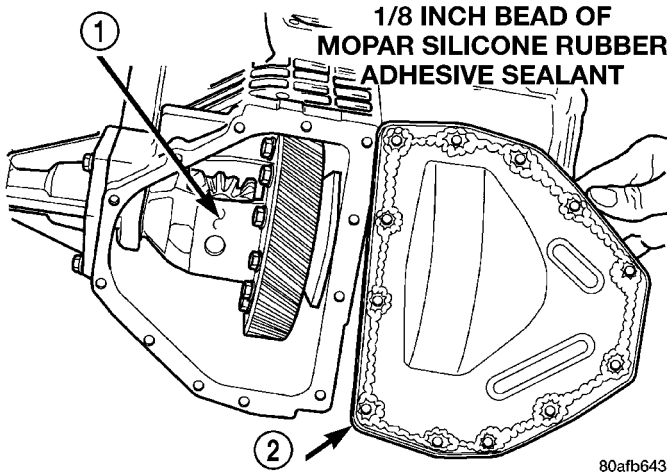

Fig. 183 Install Differential Cover

1 - DIFFERENTIAL ASSEMBLY
2 - DIFFERENTIAL COVER

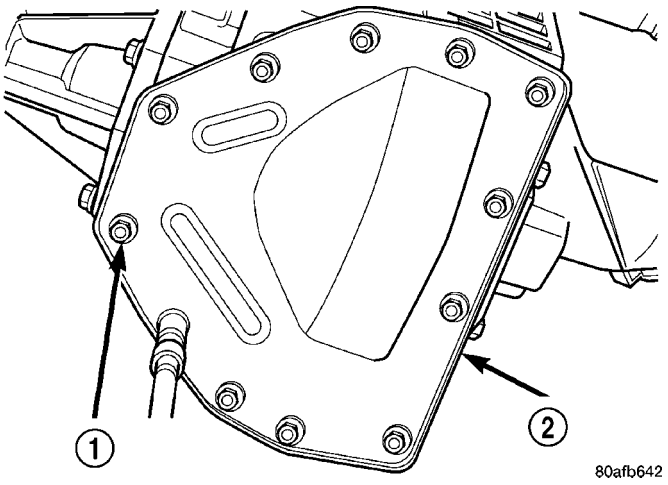

Fig. 184 Differential Cover Bolts

1 - DIFFERENTIAL COVER BOLTS
2 - DIFFERENTIAL COVER

ADJUSTMENTS

DIFFERENTIAL BEARING PRELOAD MEASUREMENT AND ADJUSTMENT

NOTE: Perform all differential bearing preload measurements with the transfer shaft and gear removed.

DIFFERENTIAL BEARING PRELOAD ADJUSTMENT USING EXISTING SHIM

(1) Position the transaxle assembly vertically on the support stand, differential bearing retainer side up.

(2) Install Tool L-4436A into the differential and onto the pinion mate shaft (Fig. 185).

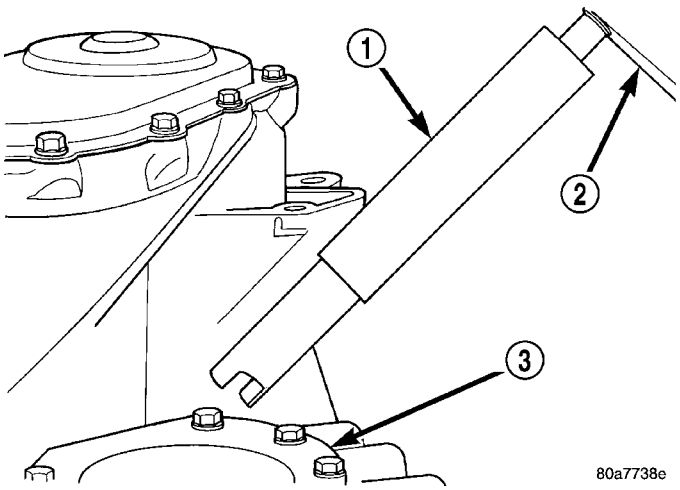

Fig. 185 Tool L-4436 and Torque Wrench

1 - SPECIAL TOOL L-4436–A
2 - TORQUE WRENCH
3 - DIFFERENTIAL BEARING RETAINER

FINAL DRIVE (Continued)

(3) Rotate the differential at least one full revolution to ensure the tapered roller bearings are fully seated.

(4) Using Tool L-4436A and an inch-pound torque wrench, check the turning torque of the differential (Fig. 186). **The turning torque should be between 5 and 18 inch-pounds.**

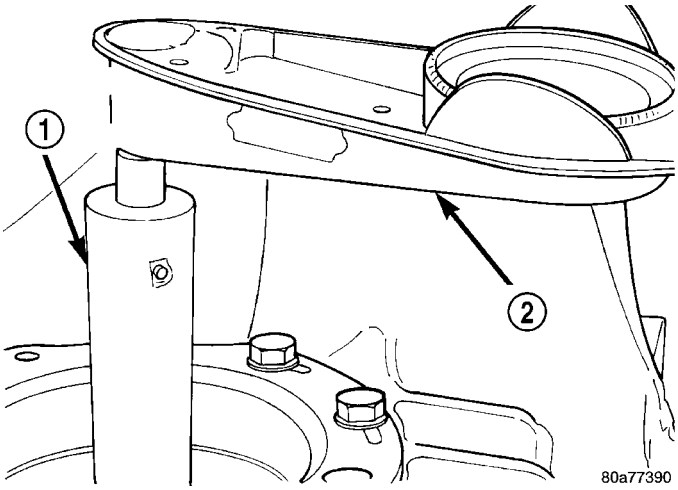

Fig. 186 Checking Differential Bearings Turning Torque

1 - SPECIAL TOOL L-4436–A
2 - TORQUE WRENCH

(5) If the turning torque is within specifications, remove tools. Setup is complete.

(6) If turning torque is not within specifications proceed with the following steps.

(a) Remove differential bearing retainer from the transaxle case.

(b) Remove the bearing cup from the differential bearing retainer using Tool 6062A.

(c) Remove the existing shim from under the cup.

(d) Measure the existing shim.

(e) If the turning torque was too high when measured, install a 0.05 mm (0.002 inch) thinner shim. If the turning torque is was too low, install a 0.05 mm (0.002 inch) thicker shim. Repeat until 5 to 18 inch-pounds turning torque is obtained. Oil Baffle is not required to be installed when making shim selection.

(f) Install the proper shim under the bearing cup. Make sure the oil baffle is installed properly in the bearing retainer, below the bearing shim and cup.

(g) Install the differential bearing retainer using Tool 5052 and C-4171. Seal the retainer to the housing with MOPAR® Adhesive Sealant and torque bolts to 28 N·m (250 in. lbs.).

(7) Using Tool L-4436A and an inch-pound torque wrench, recheck the turning torque of the differential (Fig. 186). **The turning torque should be between 5 and 18 inch-pounds.**

Shim thickness need be determined only if any of the following parts are replaced:

- Transaxle case
- Differential carrier
- Differential bearing retainer
- Extension housing
- Differential bearing cups and cones

FINAL DRIVE (Continued)

DIFFERENTIAL BEARING SHIM CHART

PART NUMBER	SHIM THICKNESS	
	MM	INCH
4659257	.980	0.0386
4659258	1.02	0.0402
4659259	1.06	0.0418
4659260	1.10	0.0434
4659261	1.14	0.0449
4659262	1.18	0.0465
4659263	1.22	0.0481
4659264	1.26	0.0497
4659265	1.30	0.0512
4659266	1.34	0.0528
4659267	1.38	0.0544
4659268	1.42	0.0560
4659269	1.46	0.0575
4659270	1.50	0.0591
4659271	1.54	0.0607
4659272	1.58	0.0623
4659273	1.62	0.0638
4659274	1.66	0.0654
4659275	1.70	0.0670
4659283	2.02	0.0796
4659284	2.06	0.0812

PRELOAD ADJUSTMENT W/O SHIM

(1) Remove the bearing cup from the differential bearing retainer using Miller special Tool 6062A.

(2) Remove existing shim from under bearing cup.

(3) Reinstall the bearing cup into the retainer using Miller Special Tool 6061, and C-4171.

NOTE: Oil baffle is not required when making the shim calculation.

(4) Install the bearing retainer into the case. Torque bolts to 28 N•m (250 in. lbs.).

(5) Position the transaxle assembly vertically on the support stand and install Miller Special Tool L-4436-A into the bearing retainer.

(6) Rotate the differential at least one full revolution to ensure the tapered roller bearings are fully seated.

(7) Attach a dial indicator to the case and zero the dial. Place the tip on the end of Special Tool L-4436-A.

(8) Place a large screwdriver to each side of the ring gear and lift. Check the dial indicator for the amount of end play.

CAUTION: Do not damage the transaxle case and/or differential retainer sealing surface.

(9) Using the end play measurement that was determined, add 0.18mm (0.007 inch). This should give you between 5 and 18 inch pounds of bearing preload. Refer to the Differential Bearing Shim Chart to determine which shim to use.

(10) Remove the differential bearing retainer. Remove the bearing cup.

(11) Install the oil baffle. Install the proper shim combination under the bearing cup.

(12) Install the differential bearing retainer. Seal the retainer to the housing with Mopar® Silicone Rubber Adhesive Sealant. Torque bolts to 28 N•m (250 in. lbs.).

(13) Using Miller Special Tool L-4436-A and an inch-pound torque wrench, check the turning torque of the differential (Fig. 186). The turning torque should be between 5-18 inch-pounds.

NOTE: If turning torque is too high install a 0.05mm (0.002 inch) thicker shim. If the turning torque is too low, install a 0.05mm (0.002 inch) thinner shim. Repeat until 5-18 inch-pounds of turning torque is obtained.

FLUID

STANDARD PROCEDURE

FLUID LEVEL AND CONDITION CHECK

NOTE: Only transmission fluid of the type labeled Mopar ATF+4 (Automatic Transmission Fluid) should be used in this transaxle.

FLUID LEVEL CHECK

The transmission sump has a fluid level indicator (dipstick) to check oil similar to most automatic transmissions. It is located on the left side of the engine. Be sure to wipe all dirt from dipstick handle before removing.

The torque converter fills in both the P Park and N Neutral positions. Place the selector lever in P Park to be sure that the fluid level check is accurate. **The engine should be running at idle speed for at least one minute, with the vehicle on level ground.** At normal operating temperature 82° C (180° F), the fluid level is correct if it is in the HOT region on the oil level indicator (Fig. 187). The fluid level should be within the COLD region of the dipstick at 27° C (80° F) fluid temperature.

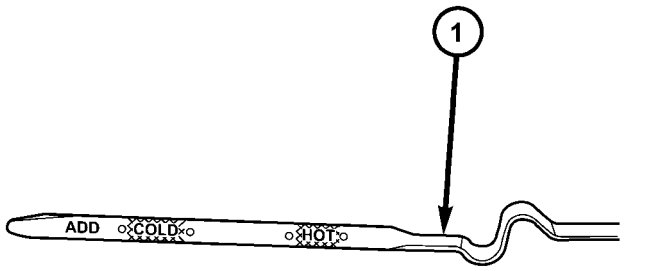

Fig. 187 Fluid Level Indicator

1 - FLUID LEVEL INDICATOR

FLUID LEVEL CHECK USING DRB

NOTE: Engine and Transaxle should be at normal operating temperature before performing this procedure.

(1) Start engine and apply parking brake.
(2) Hook up DRB scan tool and select transmission.
(3) Select sensors.
(4) Read the transmission temperature value.
(5) Compare the fluid temperature value with the fluid temperature chart (Fig. 188).
(6) Adjust transmission fluid level shown on the indicator according to the chart.
(7) Check transmission for leaks.

Low fluid level can cause a variety of conditions because it allows the pump to take in air along with the fluid. As in any hydraulic system, air bubbles make the fluid spongy, therefore, pressures will be low and build up slowly.

Improper filling can also raise the fluid level too high. When the transaxle has too much fluid, the gears churn up foam and cause the same conditions which occur with a low fluid level.

In either case, air bubbles can cause overheating and/or fluid oxidation, and varnishing. This can interfere with normal valve, clutch, and accumulator operation. Foaming can also result in fluid escaping from the transaxle vent where it may be mistaken for a leak.

FLUID CONDITION

Along with fluid level, it is important to check the condition of the fluid. When the fluid smells burned, and is contaminated with metal or friction material particles, a complete transaxle recondition is probably required. Be sure to examine the fluid on the dipstick closely. If there is any doubt about its condition, drain out a sample for a double check.

Mopar® ATF+4 (Automatic Transmission Fluid) when new is red in color. The ATF is dyed red so it can be identified from other fluids used in the vehicle such as engine oil or antifreeze. The red color is not permanent and is not an indicator of fluid condition. As the vehicle is driven, the ATF will begin to look darker in color and may eventually become brown. **This is normal.** ATF+4 also has a unique odor that may change with age. Consequently, **odor and color cannot be used to indicate the fluid condition or the need for a fluid change.**

After the fluid has been checked, seat the dipstick fully to seal out water and dirt.

STANDARD PROCEDURE - FLUID AND FILTER SERVICE

NOTE: Refer to the maintenance schedules in LUBRICATION and MAINTENANCE, or the vehicle owner's manual, for the recommended maintenance (fluid/filter change) intervals for this transaxle.

FLUID (Continued)

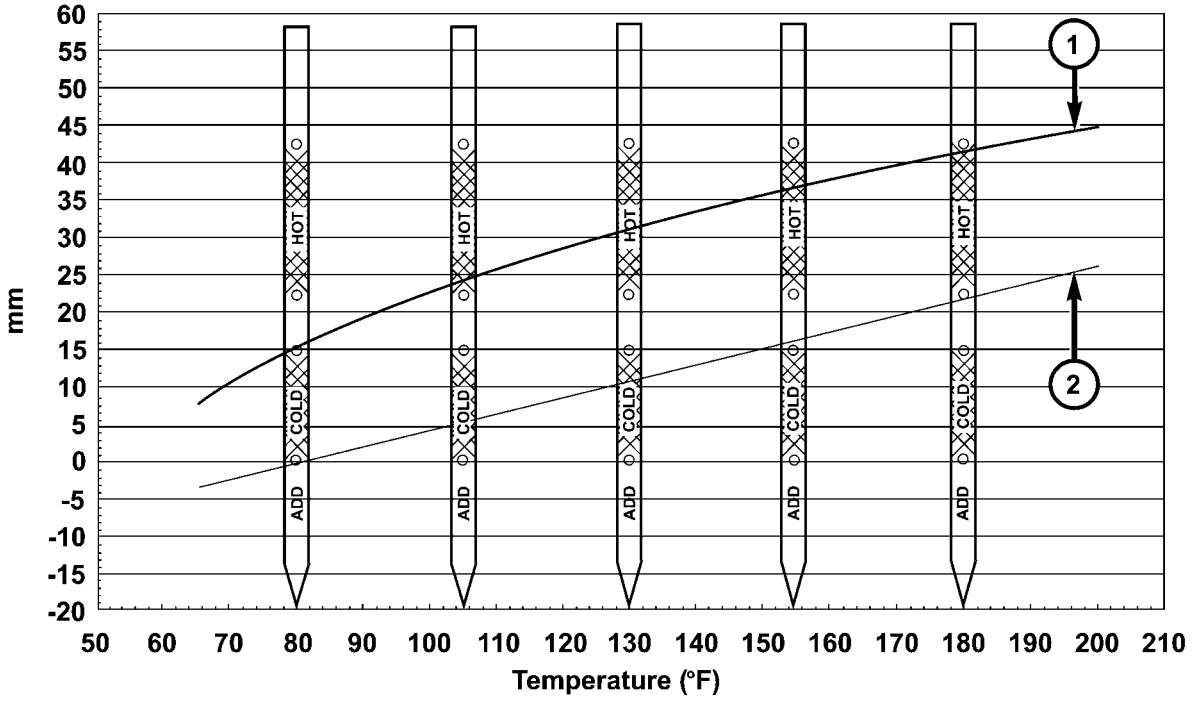

80d64e6e

Fig. 188 Transmission Fluid Temperature Chart

1 - MAX. LEVEL
2 - MIN. LEVEL

NOTE: Only fluids of the type labeled Mopar® ATF+4 (Automatic Transmission Fluid) should be used. A filter change should be made at the time of the transmission oil change. The magnet (on the inside of the oil pan) should also be cleaned with a clean, dry cloth.

NOTE: If the transaxle is disassembled for any reason, the fluid and filter should be changed.

FLUID/FILTER SERVICE (RECOMMENDED)

(1) Raise vehicle on a hoist. Refer to LUBRICATION and MAINTENANCE for proper procedures. Place a drain container with a large opening, under transaxle oil pan.

(2) Loosen pan bolts and tap the pan at one corner to break it loose allowing fluid to drain, then remove the oil pan.

(3) Install a new filter and o-ring on bottom of the valve body (Fig. 189).

(4) Clean the oil pan and magnet. Reinstall pan using new Mopar Silicone Adhesive sealant. Tighten oil pan bolts to 19 N·m (165 in. lbs.).

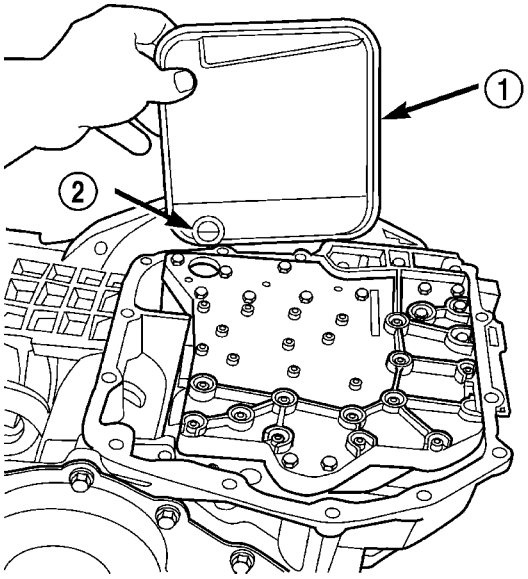

80be4705

Fig. 189 Filter and O-Ring

1 - OIL FILTER
2 - O-RING

(5) Pour four quarts of Mopar® ATF+4 (Automatic Transmission Fluid) through the dipstick opening.

FLUID (Continued)

(6) Start engine and allow to idle for at least one minute. Then, with parking and service brakes applied, move selector lever momentarily to each position, ending in the park or neutral position.

(7) Check the transaxle fluid level and add an appropriate amount to bring the transaxle fluid level to 3mm (1/8 in.) below the lowest mark on the dipstick (Fig. 190).

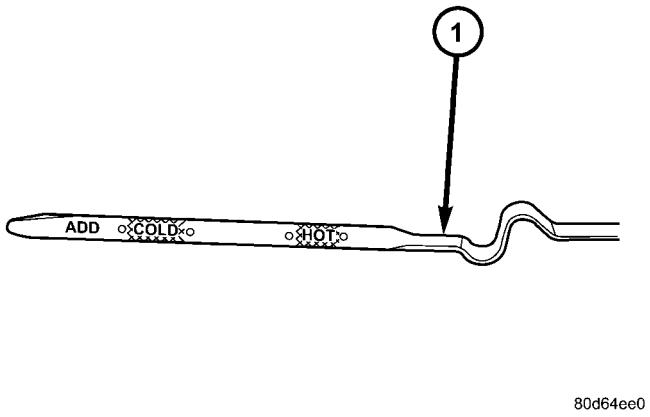

Fig. 190 Fluid Level Indicator

1 - FLUID LEVEL INDICATOR

(8) Recheck the fluid level after the transaxle has reached normal operating temperature (180°F.). Refer to Fluid Level and Condition Check for the proper fluid fill procedure.

(9) To prevent dirt from entering transaxle, make certain that dipstick is fully seated into the dipstick opening.

DIPSTICK TUBE FLUID SUCTION METHOD (ALTERNATIVE)

(1) When performing the fluid suction method, make sure the transaxle is at full operating temperature.

(2) To perform the dipstick tube fluid suction method, use a suitable fluid suction device (Vacula™ or equivalent).

(3) Insert the fluid suction line into the dipstick tube.

NOTE: Verify that the suction line is inserted to the lowest point of the transaxle oil pan. This will ensure complete evacuation of the fluid in the pan.

(4) Follow the manufacturers recommended procedure and evacuate the fluid from the transaxle.

(5) Remove the suction line from the dipstick tube.

(6) Pour four quarts of Mopar® ATF+4 (Automatic Transmission Fluid) through the dipstick opening.

(7) Start engine and allow to idle for at least one minute. Then, with parking and service brakes applied, move selector lever momentarily to each position, ending in the park or neutral position.

(8) Check the transaxle fluid level and add an appropriate amount to bring the transaxle fluid level to 3mm (1/8 in.) below the lowest mark on the dipstick (Fig. 190).

(9) Recheck the fluid level after the transaxle has reached normal operating temperature (180°F.). (Refer to 21 - TRANSMISSION/TRANSAXLE/AUTOMATIC - 41TE/FLUID - STANDARD PROCEDURE)

(10) To prevent dirt from entering transaxle, make certain that dipstick is fully seated into the dipstick opening.

GEAR SHIFT CABLE

REMOVAL

(1) Disconnect battery cables.

(2) Remove battery shield.

(3) Remove battery.

(4) Remove speed control servo and position out of way.

(5) Disconnect gear shift cable at manual valve lever (Fig. 191).

(6) Disconnect gear shift cable from upper mount bracket (Fig. 191).

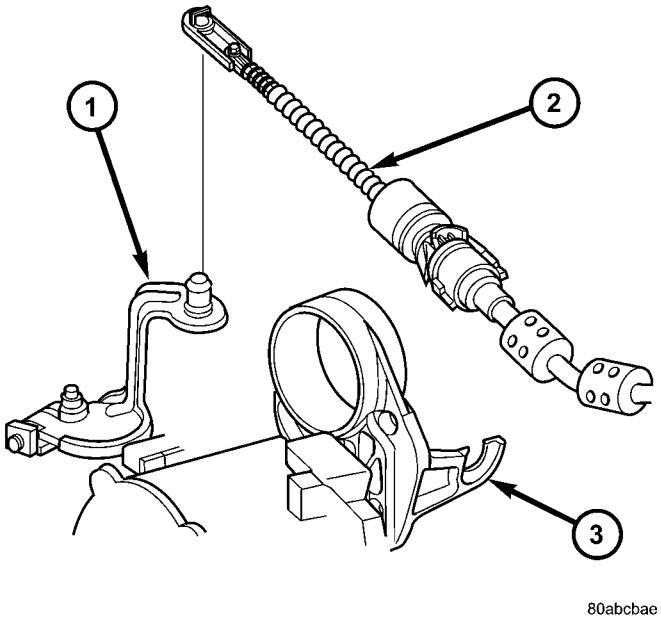

Fig. 191 Gearshift Cable at Transaxle - Typical

1 - MANUAL VALVE LEVER
2 - GEAR SHIFT CABLE
3 - UPPER MOUNT BRACKET

GEAR SHIFT CABLE (Continued)

(7) Remove instrument panel lower silencer (Fig. 192).

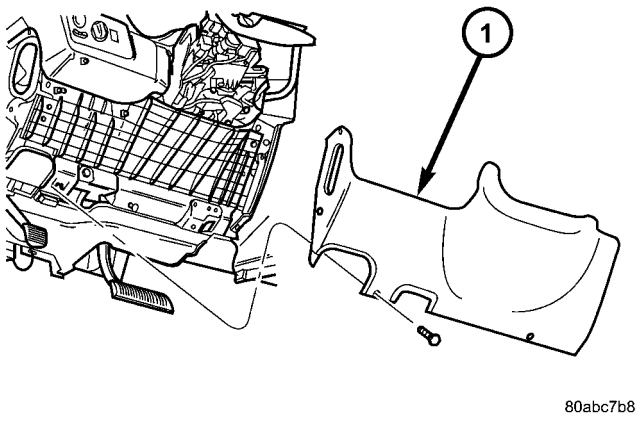

Fig. 192 Instrument Panel Lower Silencer

1 - INSTRUMENT PANEL LOWER SILENCER

(8) Remove knee bolster (Fig. 193).

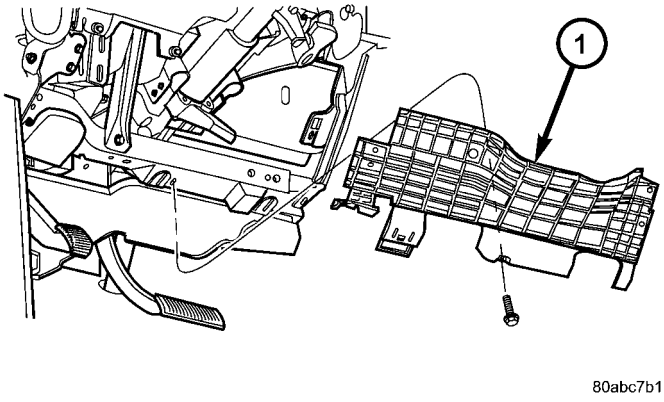

Fig. 193 Knee Bolster

1 - KNEE BOLSTER

(9) Disconnect gear shift cable from gear shift lever (Fig. 194).

(10) Remove gear shift cable from column bracket (Fig. 194).

(11) Disengage grommet from dash panel (Fig. 195) and remove gear shift cable from inside vehicle.

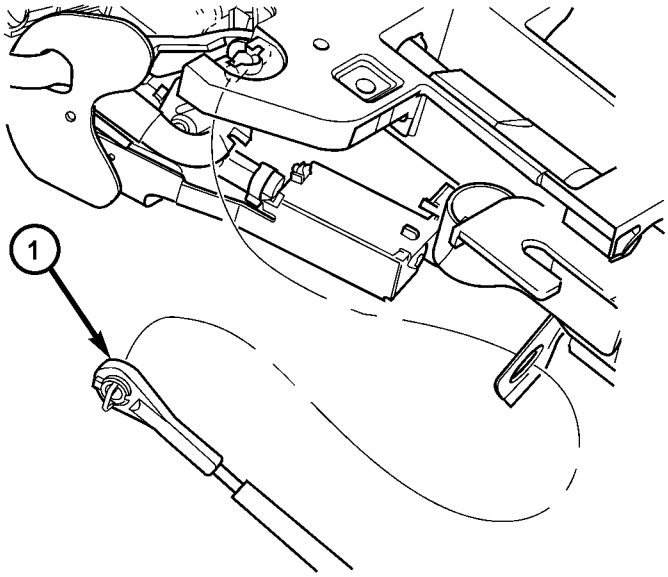

Fig. 194 Gearshift Cable at Column

1 - GEAR SHIFT CABLE

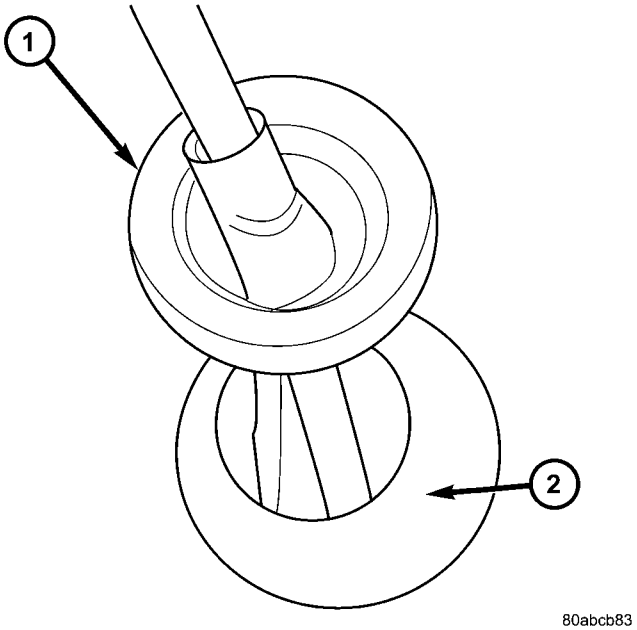

Fig. 195 Gearshift Cable/Grommet at Dash Panel

1 - CABLE GROMMET
2 - DASH PANEL

HOLDING CLUTCHES

DESCRIPTION

Two hydraulically applied multi-disc clutches are used to hold planetary geartrain components stationary while the input clutches drive others. The 2/4 and Low/Reverse clutches are considered holding clutches and are contained at the rear of the transaxle case. (Fig. 196).

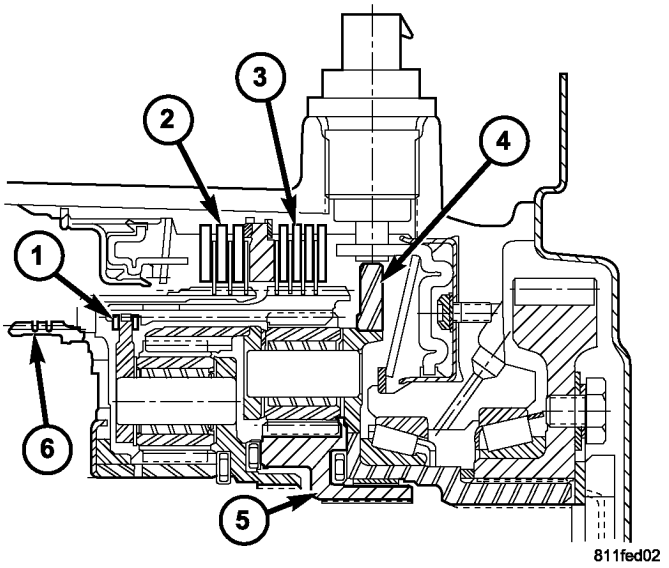

Fig. 196 2/4 and Low/Reverse Clutches

1 - FRONT PLANET CARRIER/REAR ANNULUS
2 - 2/4 CLUTCH
3 - LOW/REVERSE CLUTCH
4 - REAR PLANET CARRIER/FRONT ANNULUS
5 - REAR SUN GEAR
6 - FRONT SUN GEAR ASSEMBLY

OPERATION

NOTE: Refer to the "Elements In Use" chart in Diagnosis and Testing for a collective view of which clutch elements are applied at each position of the selector lever.

2/4 CLUTCH

The 2/4 clutch is hydraulically applied in second and fourth gears by pressurized fluid against the 2/4 clutch piston. When the 2/4 clutch is applied, the front sun gear assembly is held or grounded to the transaxle case.

LOW/REVERSE CLUTCH

The Low/Reverse clutch is hydraulically applied in park, reverse, neutral, and first gears by pressurized fluid against the Low/Reverse clutch piston. When the Low/Reverse clutch is applied, the front planet carrier/rear annulus assembly is held or grounded to the transaxle case.

INPUT CLUTCH ASSEMBLY

DISASSEMBLY

(1) Mount input clutch assembly to Input Clutch Pressure Fixture (Tool 8391).

(2) Tap down reverse clutch reaction plate to release pressure from snap ring (Fig. 197).

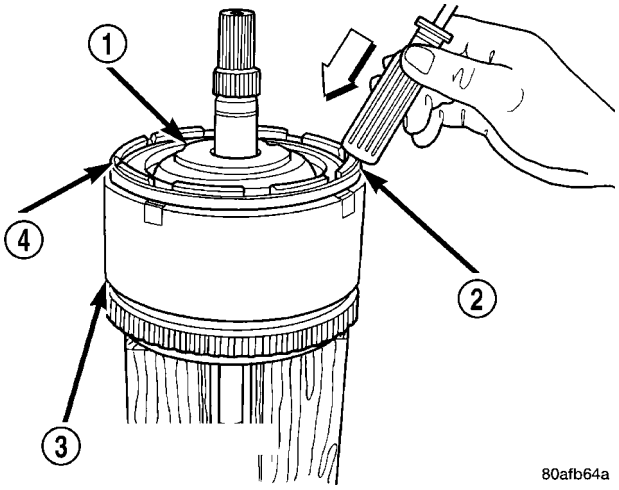

Fig. 197 Tapping Reaction Plate

1 - #4 THRUST PLATE (SELECT)
2 - TAP DOWN REVERSE CLUTCH REACTION PLATE TO REMOVE OR INSTALL SNAP RING
3 - INPUT SHAFT CLUTCHES RETAINER ASSEMBLY
4 - REVERSE CLUTCH REACTION PLATE

(3) Remove reverse clutch snap ring (Fig. 198).

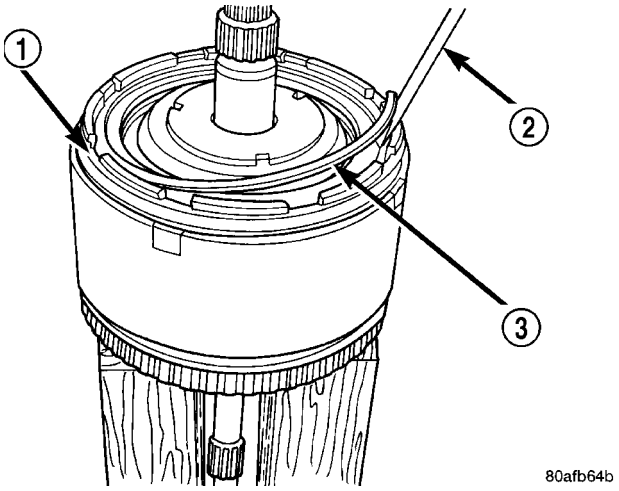

Fig. 198 Reverse Clutch Snap Ring

1 - REACTION PLATE
2 - SCREWDRIVER
3 - REVERSE CLUTCH SNAP RING (SELECT)

INPUT CLUTCH ASSEMBLY (Continued)

(4) Pry up and remove reverse clutch reaction plate (Fig. 199).

(5) Remove reverse clutch pack (Fig. 200). **Tag components for assembly identification.**

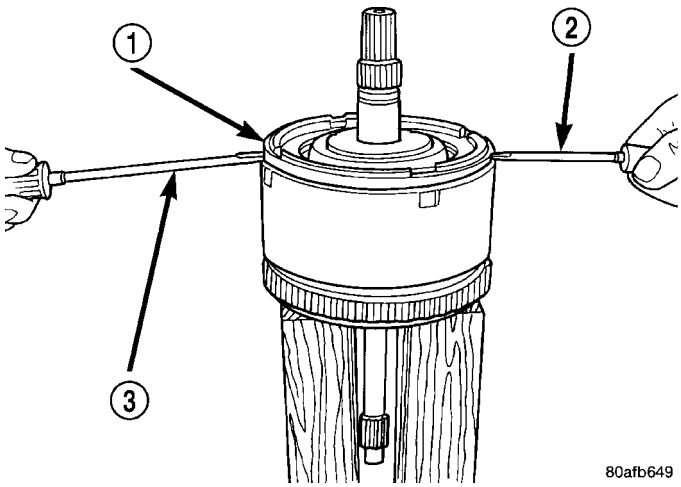

Fig. 199 Pry Reverse Clutch Reaction Plate

1 - REVERSE CLUTCH REACTION PLATE
2 - SCREWDRIVER
3 - SCREWDRIVER

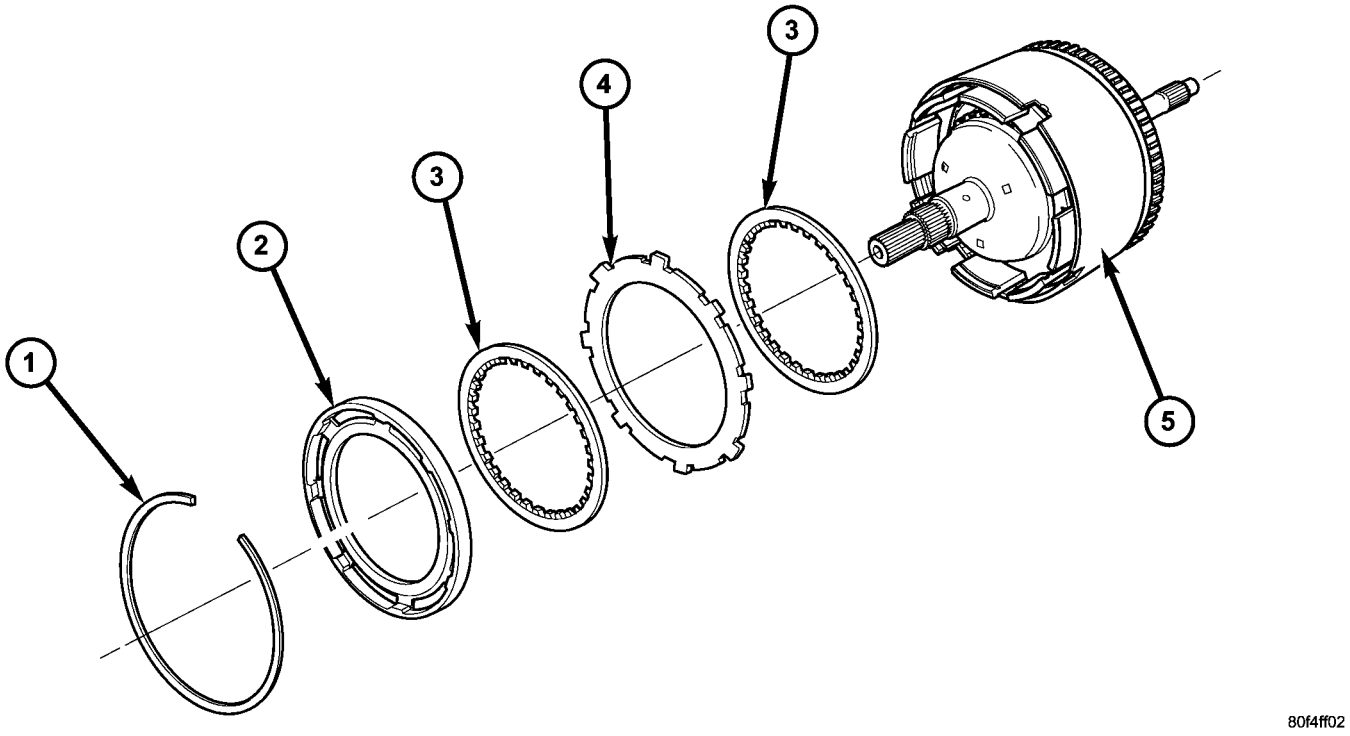

Fig. 200 Reverse Clutch Assembly

1 - SNAP RING
2 - REACTION PLATE
3 - CLUTCH DISC (2)
4 - CLUTCH PLATE (1)
5 - INPUT CLUTCH ASSEMBLY

INPUT CLUTCH ASSEMBLY (Continued)

(6) Remove the OD/Reverse pressure plate snap ring (Fig. 201).

(7) Remove OD/Reverse pressure plate (Fig. 201).

(8) Remove OD/Reverse pressure plate wave snap ring (Fig. 201).

(9) Remove OD clutch pack (Fig. 201). **Tag components for assembly identification.**

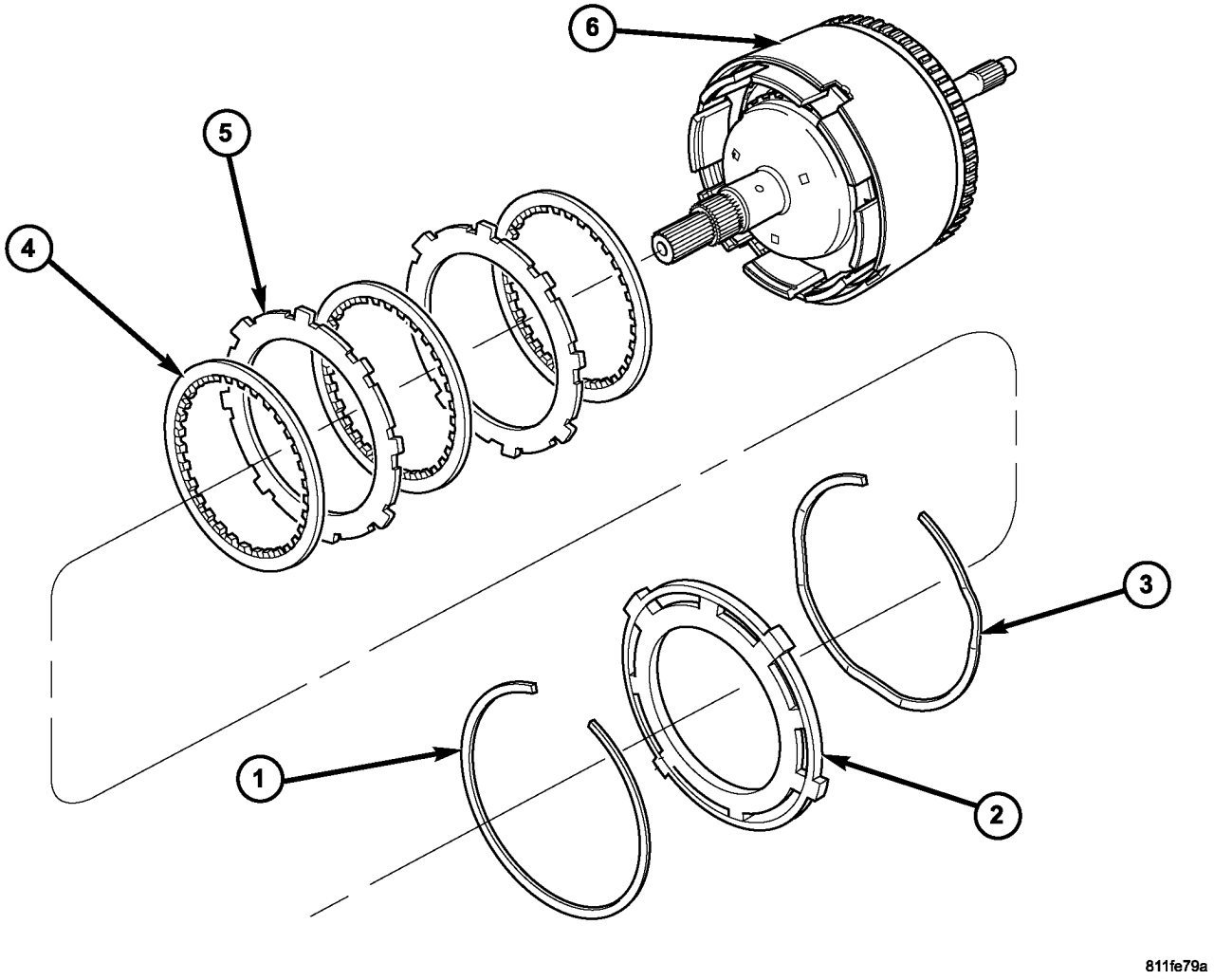

Fig. 201 Overdrive Clutch Assembly

1 - SNAP RING
2 - OD/REVERSE PRESSURE PLATE
3 - SNAP RING (WAVE)
4 - CLUTCH DISC (3)
5 - CLUTCH STEEL (2)
6 - INPUT CLUTCH ASSEMBLY

INPUT CLUTCH ASSEMBLY (Continued)

(10) Remove and inspect OD and UD Shafts, as well as #3 thrust washer and plate, and #2 needle bearing (Fig. 202).

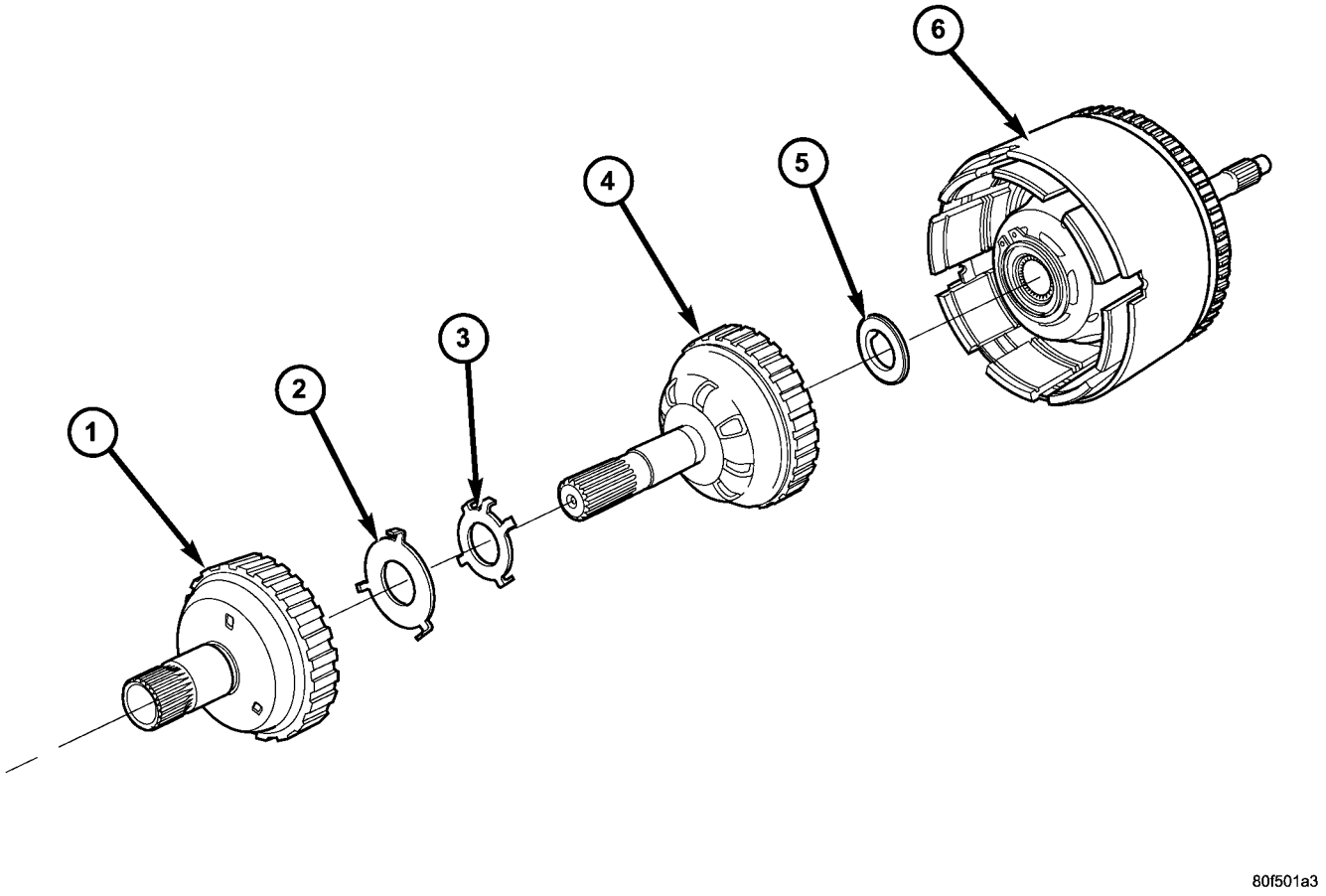

Fig. 202 Overdrive/Underdrive Shafts

1 - OVERDRIVE SHAFT
2 - #3 THRUST PLATE (3 TABS)
3 - #3 THRUST WASHER (5 TABS)
4 - UNDERDRIVE SHAFT
5 - #2 NEEDLE BEARING (3 TABS)
6 - INPUT CLUTCH ASSEMBLY

INPUT CLUTCH ASSEMBLY (Continued)

(11) Remove the OD/UD reaction plate tapered snap ring, reaction plate, and first friction disc (Fig. 203).

(12) Remove the UD clutch flat snap ring and rest of UD clutch pack (Fig. 203). **Tag clutch pack for assembly identification.**

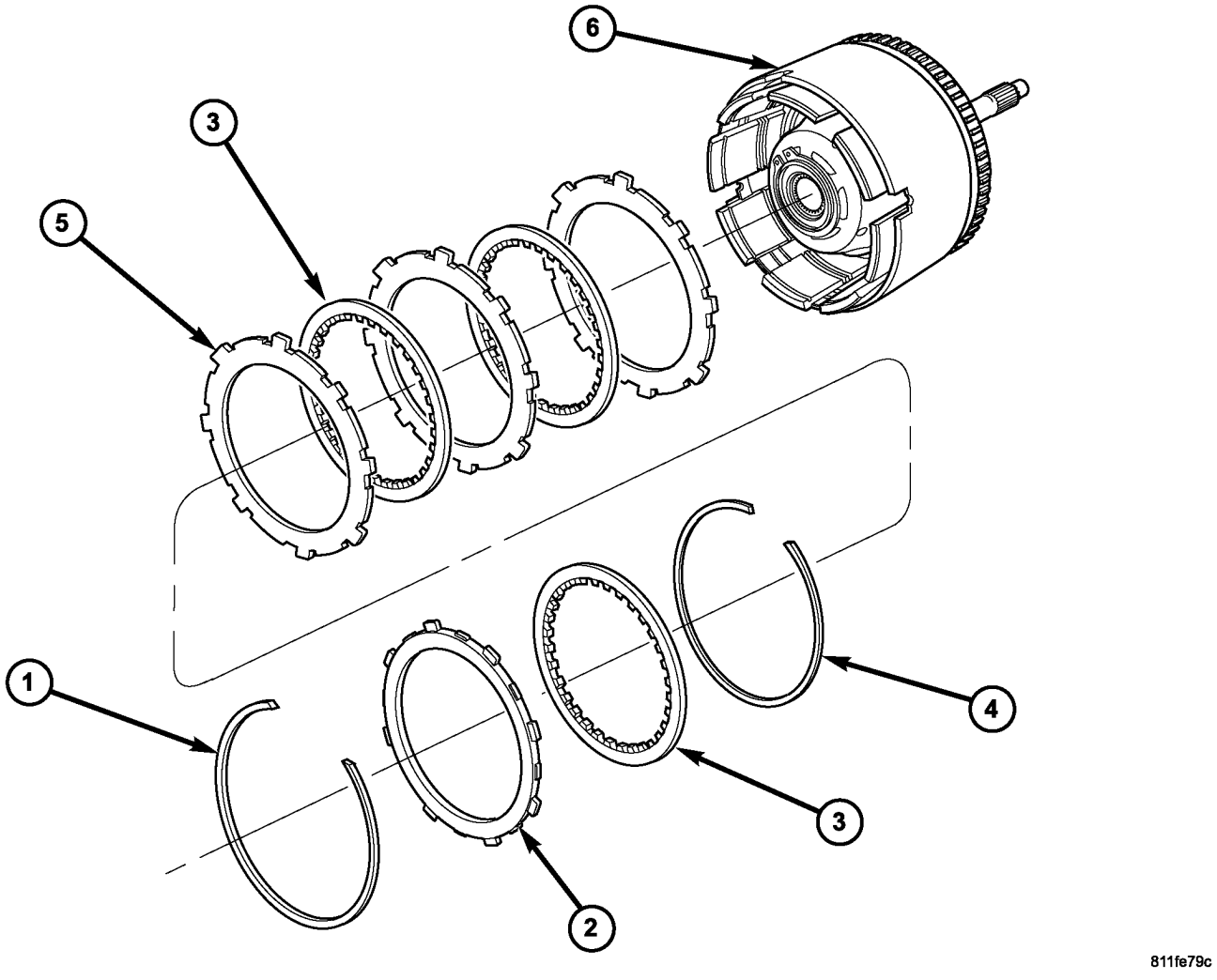

Fig. 203 Underdrive Clutch Assembly

1 - SNAP RING (TAPERED)
2 - OD/UD REACTION PLATE
3 - CLUTCH DISC (3)
4 - SNAP RING (FLAT)
5 - CLUTCH PLATE (3)
6 - INPUT CLUTCH ASSEMBLY

INPUT CLUTCH ASSEMBLY (Continued)

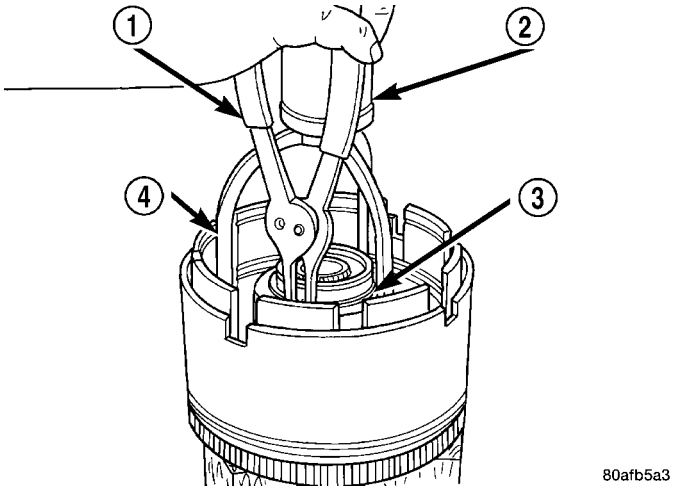

Fig. 204 UD Spring Retainer Snap Ring

1 - SNAP RING PLIERS
2 - ARBOR PRESS RAM
3 - SNAP RING
4 - SPECIAL TOOL 5059A

CAUTION: Compress return spring just enough to remove or install snap ring.

(13) Using Tool 5059A and an arbor press, compress UD clutch piston/spring enough to remove snap ring (Fig. 204) (Fig. 205).

(14) Remove spring retainer, spring, and piston (Fig. 205).

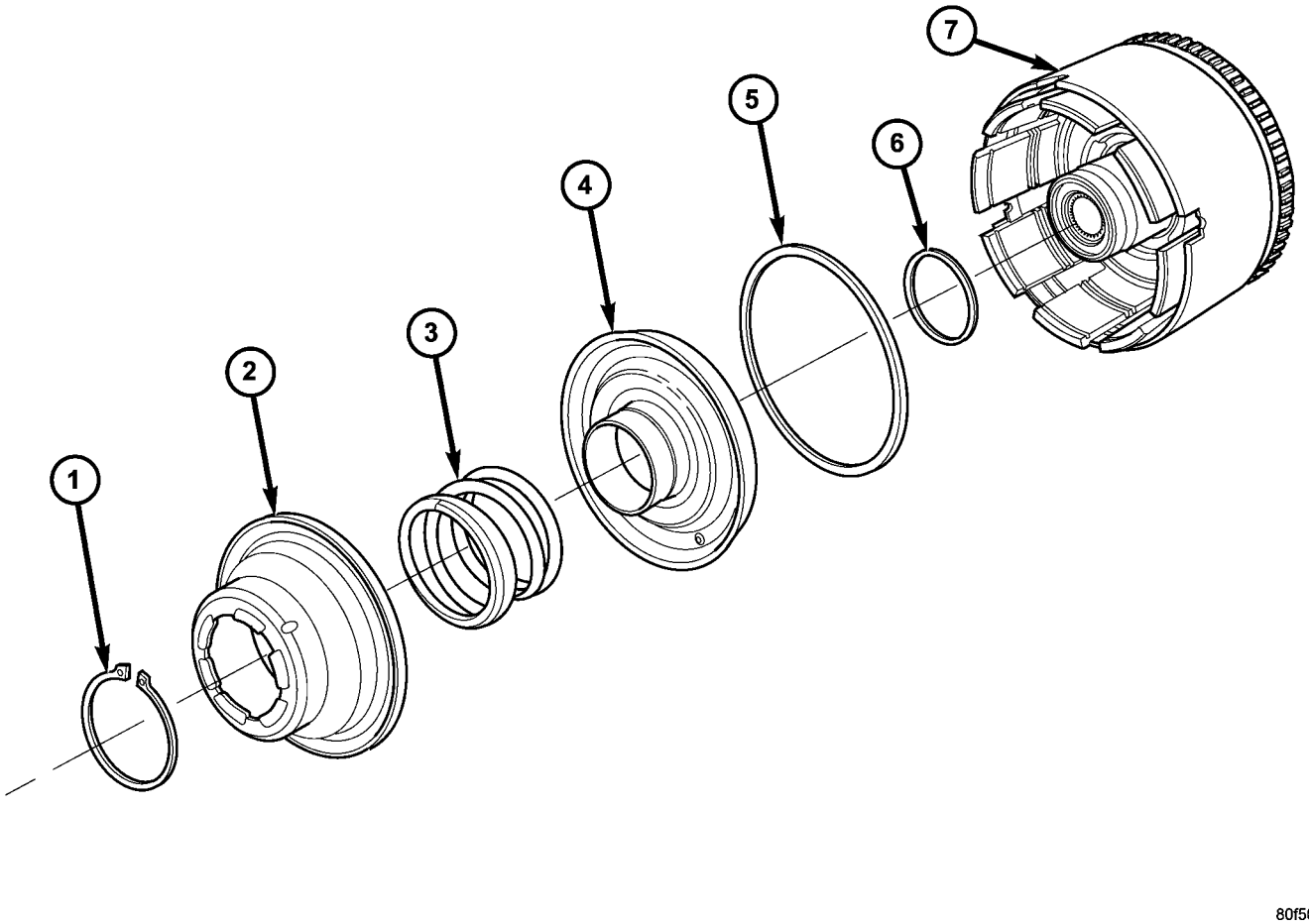

Fig. 205 Underdrive Clutch Piston, Spring and Retainer

1 - SNAP RING
2 - SPRING RETAINER
3 - SPRING
4 - UD CLUTCH PISTON
5 - SEAL, OUTER
6 - SEAL, INNER
7 - INPUT CLUTCH ASSEMBLY

INPUT CLUTCH ASSEMBLY (Continued)

(15) Remove input hub tapered snap ring (Fig. 206) (Fig. 212).

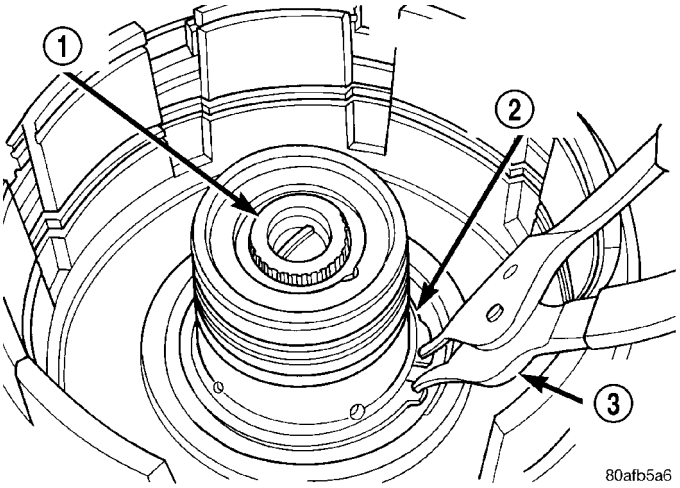

Fig. 206 Input Hub Tapered Snap Ring

1 - INPUT SHAFT
2 - INPUT HUB SNAP RING (TAPERED SIDE UP WITH TABS IN CAVITY)
3 - SNAP RING PLIERS

(16) Tap on input hub with soft faced hammer and separate input hub from OD/Reverse piston and clutch retainer (Fig. 207).

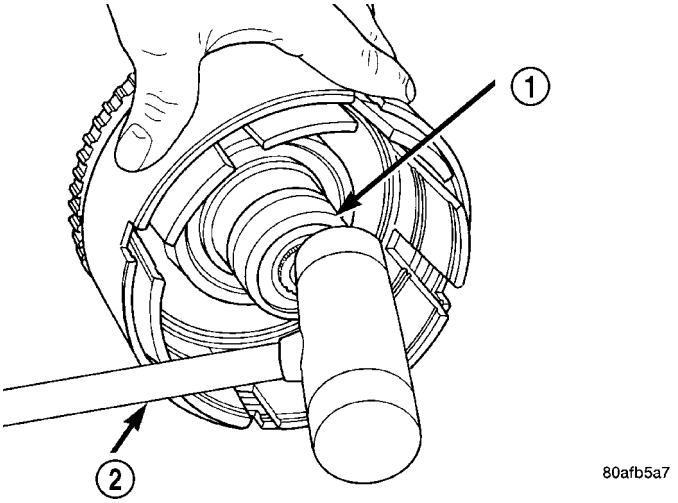

Fig. 207 Tap on Input Hub

1 - INPUT SHAFT AND HUB ASSEMBLY
2 - PLASTIC HAMMER

(17) Separate clutch retainer from OD/Reverse piston (Fig. 208).

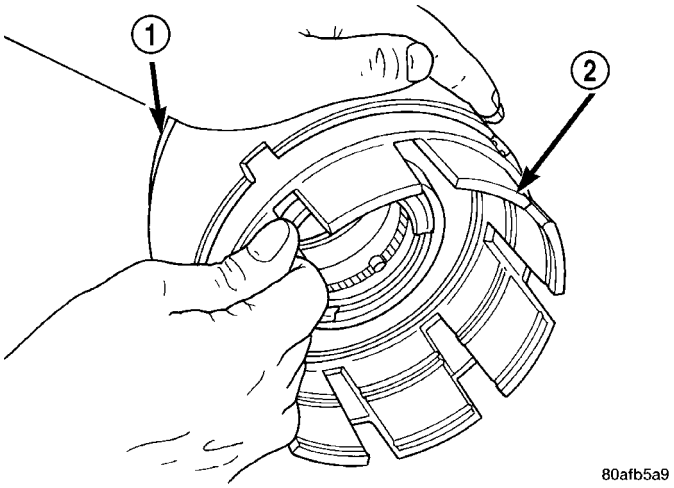

Fig. 208 Pull Retainer from Piston

1 - OVERDRIVE/REVERSE PISTON
2 - INPUT CLUTCHES RETAINER

(18) Using Tool 6057 and an arbor press, compress return OD/Reverse piston return spring just enough to remove snap ring (Fig. 209).

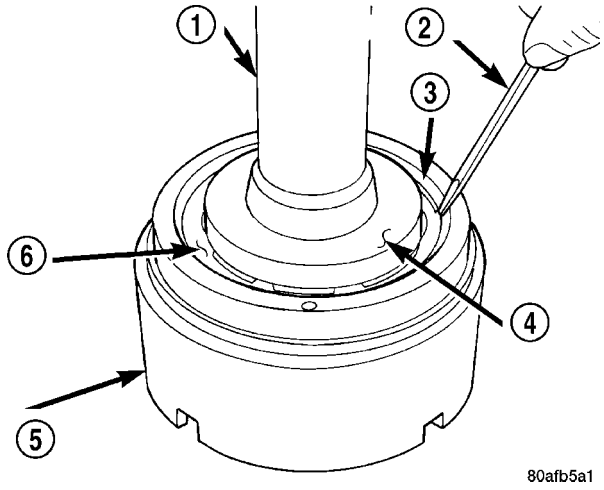

Fig. 209 Install Snap Ring

1 - ARBOR PRESS RAM (COMPRESS RETURN SPRING JUST ENOUGH TO REMOVE OR INSTALL SNAP RING)
2 - SCREWDRIVER
3 - SNAP RING
4 - SPECIAL TOOL 6057
5 - OD/REVERSE PISTON
6 - RETURN SPRING

INPUT CLUTCH ASSEMBLY (Continued)

(19) Remove input shaft to input clutch hub snap ring (Fig. 210) (Fig. 212).

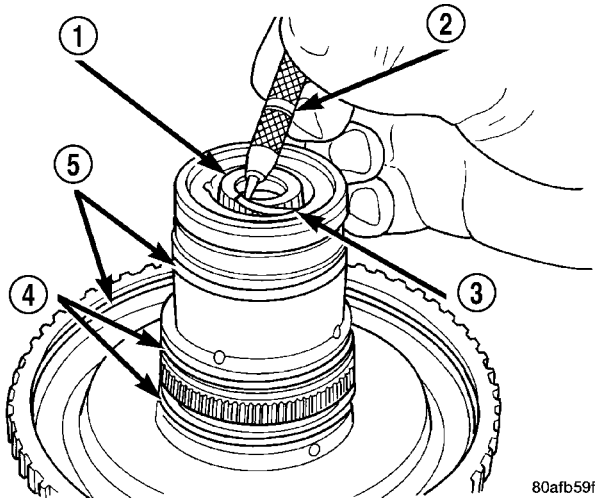

Fig. 210 Remove Input Shaft Snap Ring

1 - INPUT SHAFT
2 - SHARP-POINTED TOOL
3 - SNAP RING
4 - O-RINGS
5 - SEALS

(20) Using a suitably sized socket and an arbor press, remove input shaft from input shaft hub (Fig. 211).

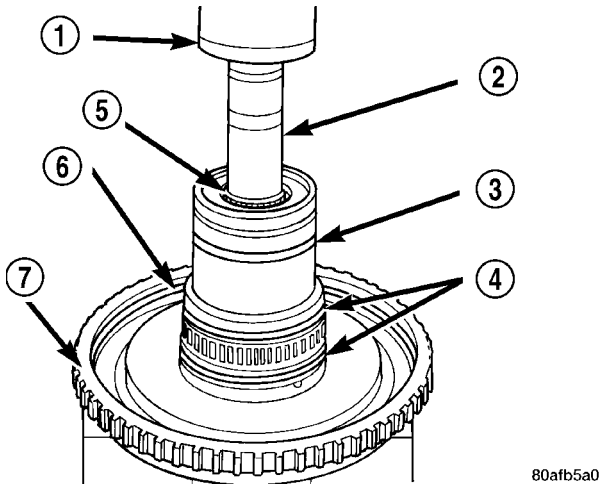

Fig. 211 Remove Input Shaft

1 - ARBOR PRESS RAM
2 - SOCKET
3 - SEAL
4 - O-RINGS
5 - INPUT SHAFT
6 - SEAL
7 - INPUT SHAFT HUB ASSEMBLY

INPUT CLUTCH ASSEMBLY (Continued)

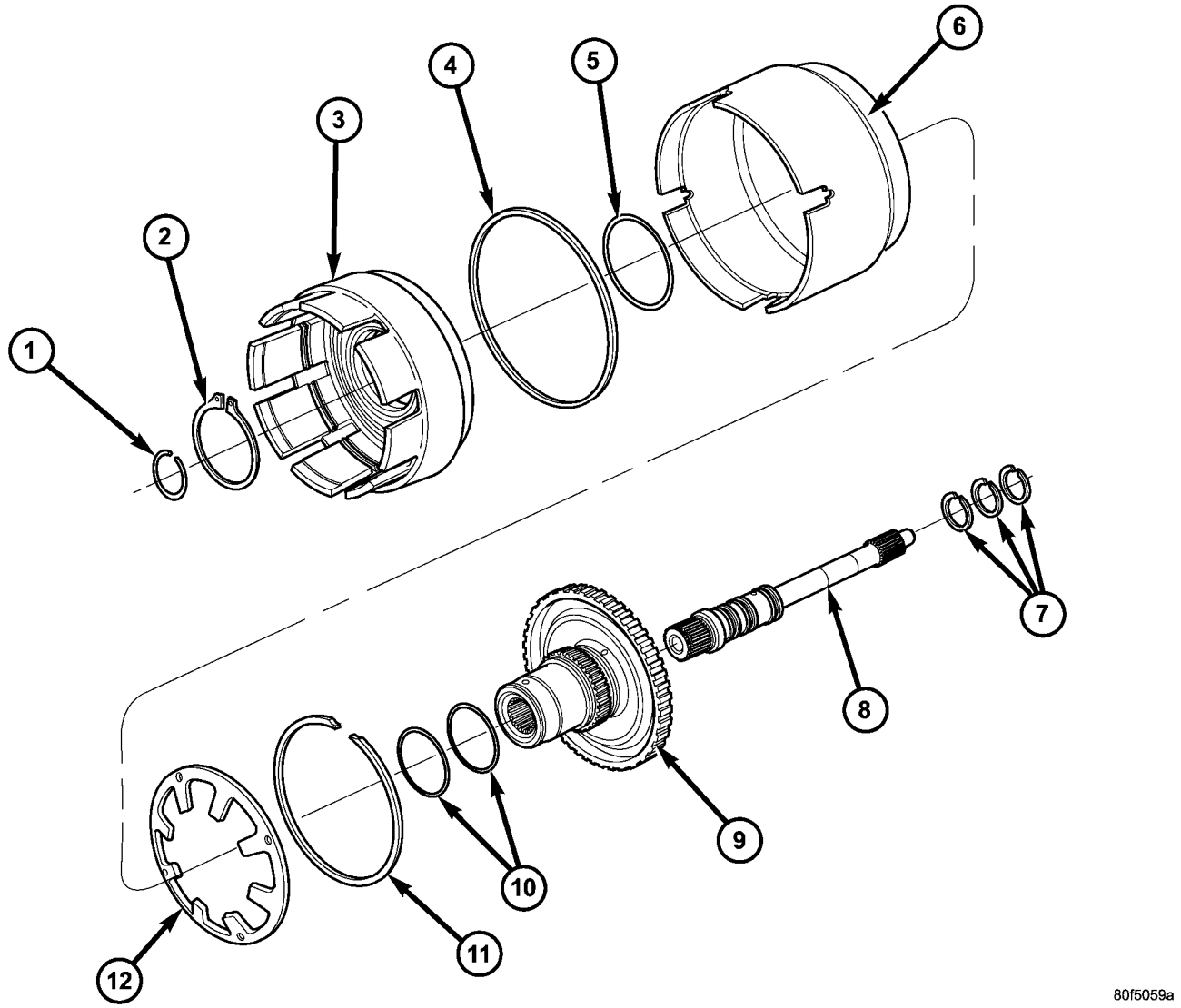

Fig. 212 Input Clutch Hub, Retainer, and OD/Reverse Piston

1 - SNAP RING (INPUT SHAFT)
2 - SNAP RING
3 - CLUTCH RETAINER
4 - SEAL, OUTER
5 - SEAL, INNER
6 - OD/REVERSE PISTON
7 - SEAL, INPUT SHAFT
8 - SHAFT, INPUT
9 - HUB
10 - SEAL
11 - SNAP RING
12 - BELLEVILLE SPRING

INPUT CLUTCH ASSEMBLY (Continued)

ASSEMBLY

Use petrolatum on all seals to ease assembly of components.

(1) Using an arbor press, install input shaft to input shaft hub (Fig. 213).

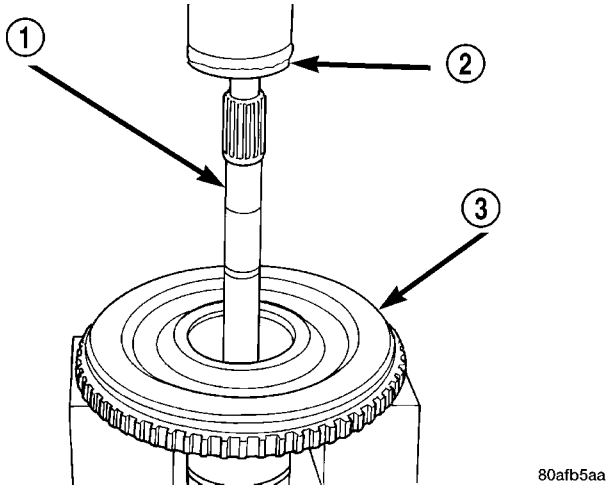

Fig. 213 Install Input Shaft

1 - INPUT SHAFT
2 - ARBOR PRESS RAM
3 - INPUT SHAFT HUB ASSEMBLY

(2) Install input shaft snap ring (Fig. 214).

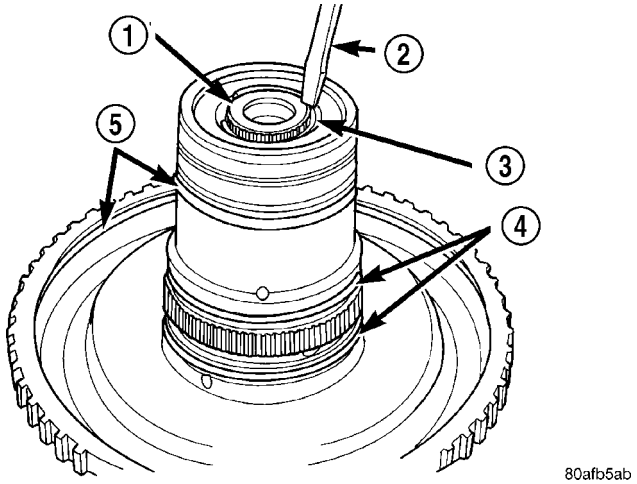

Fig. 214 Install Input Shaft Snap Ring

1 - INPUT SHAFT
2 - SCREWDRIVER (DO NOT SCRATCH BEARING SURFACE)
3 - SNAP RING
4 - O-RINGS
5 - SEALS

(3) Using an arbor press and Tool 6057, Install OD/Reverse piston return spring and snap ring (Fig. 215) (Fig. 216).

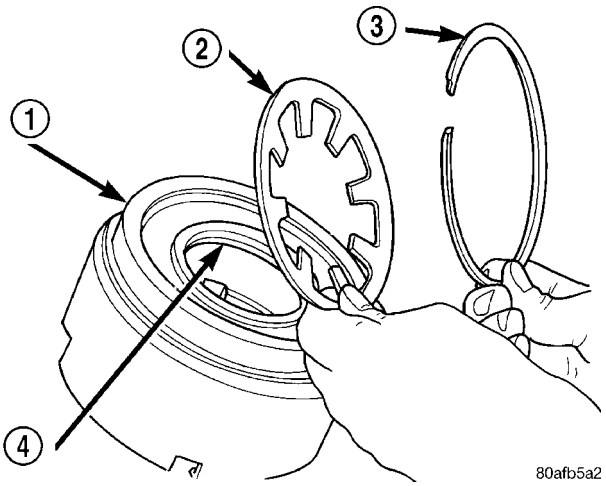

Fig. 215 Return Spring and Snap Ring

1 - OD/REVERSE PISTON
2 - RETURN SPRING
3 - SNAP RING
4 - O-RING

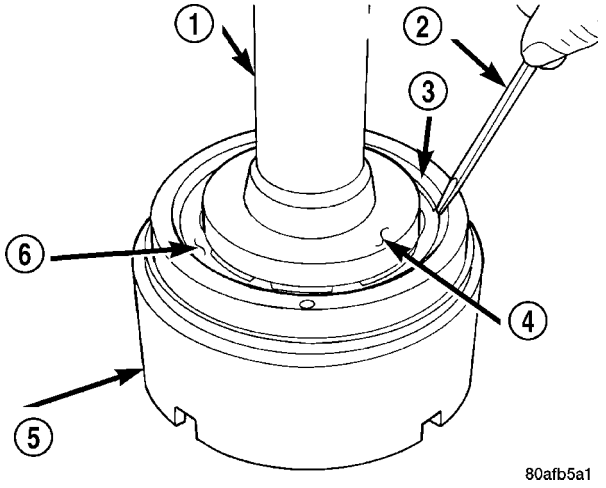

Fig. 216 Install Snap Ring

1 - ARBOR PRESS RAM (COMPRESS RETURN SPRING JUST ENOUGH TO REMOVE OR INSTALL SNAP RING)
2 - SCREWDRIVER
3 - SNAP RING
4 - SPECIAL TOOL 6057
5 - OD/REVERSE PISTON
6 - RETURN SPRING

INPUT CLUTCH ASSEMBLY (Continued)

(4) Install the OD/Reverse piston assembly to the input clutch retainer as shown in (Fig. 217).

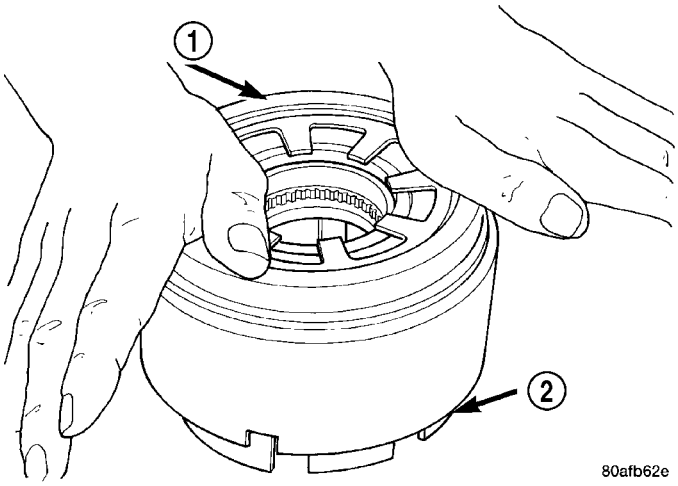

Fig. 217 Install OD/Reverse Piston

1 - PUSH DOWN TO INSTALL OVERDRIVE/REVERSE PISTON
2 - INPUT CLUTCHES RETAINER

(5) Install the input hub/shaft assy. to the OD/Reverse piston/clutch retainer assy. (Fig. 218).

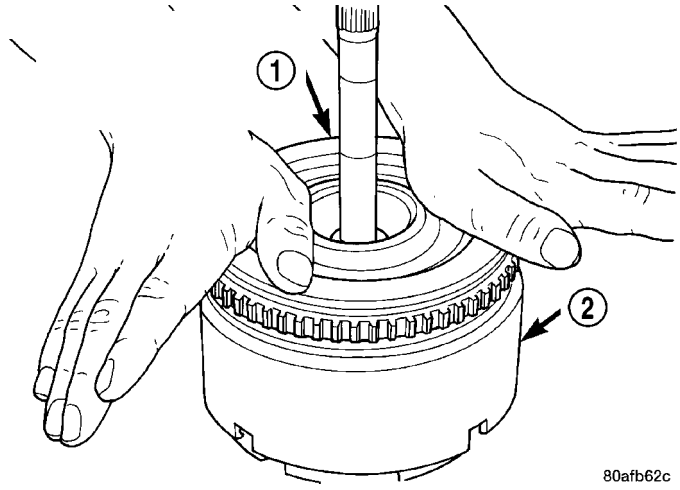

Fig. 218 Install Input Shaft Hub Assembly

1 - PUSH DOWN TO INSTALL INPUT SHAFT HUB ASSEMBLY (ROTATE TO ALIGN SPLINES)
2 - OD/REV. PISTON

(6) Install input hub tapered snap ring (Fig. 219) (Fig. 220).

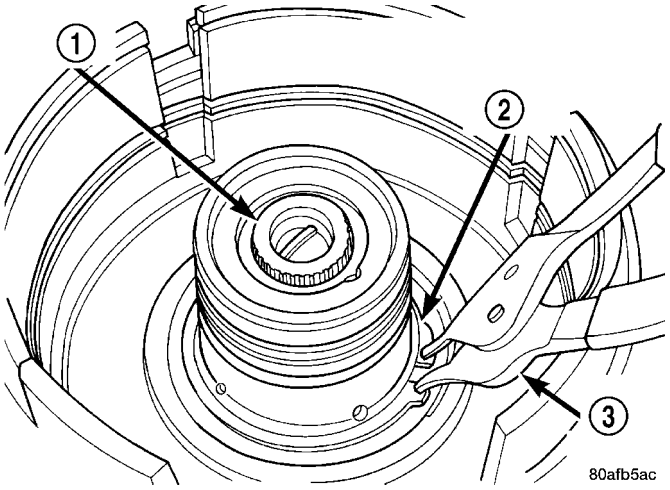

Fig. 219 Install Input Hub Tapered Snap Ring

1 - INPUT SHAFT
2 - INPUT HUB SNAP RING (TAPERED SIDE UP WITH TABS IN CAVITY)
3 - SNAP RING PLIERS

INPUT CLUTCH ASSEMBLY (Continued)

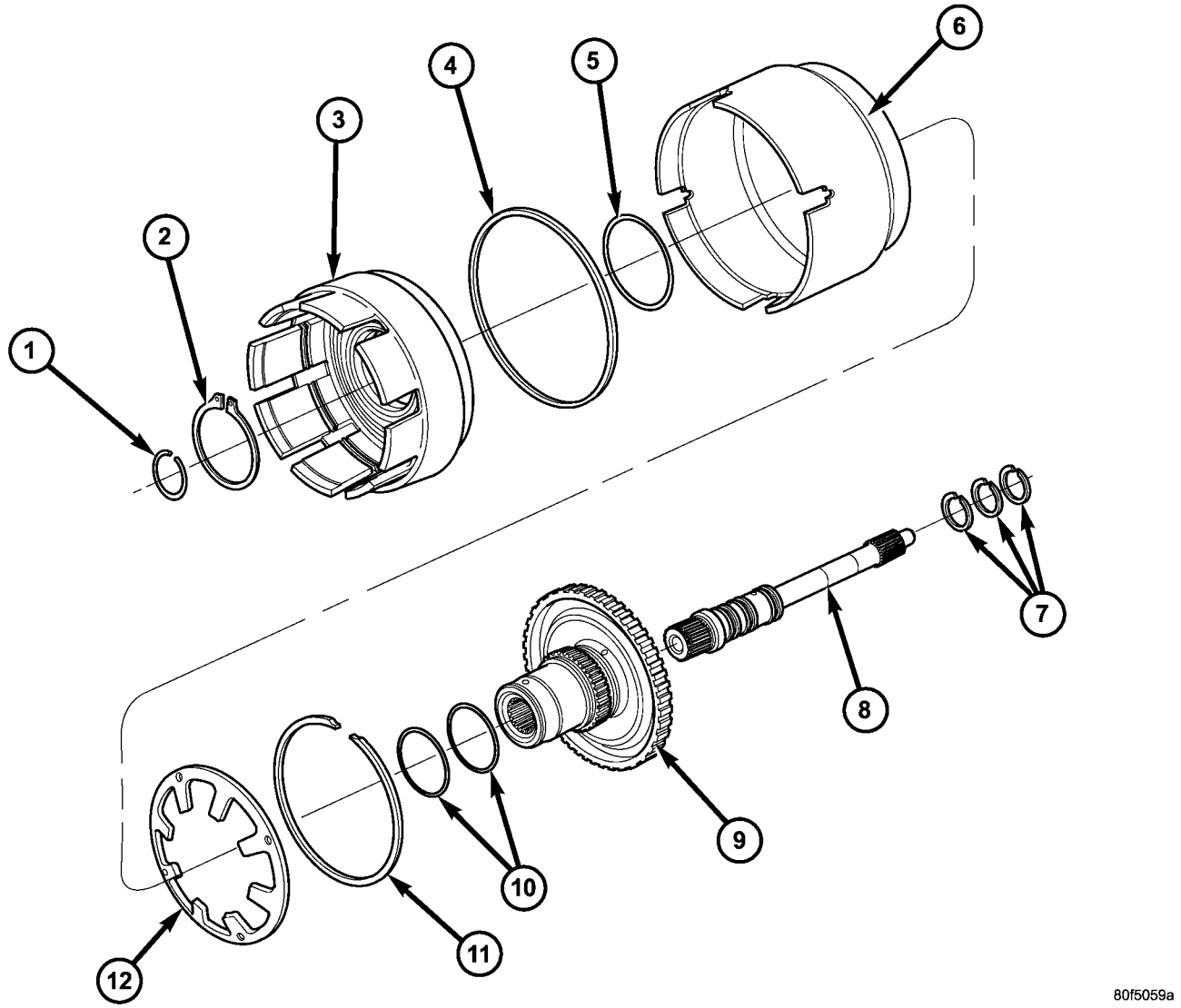

Fig. 220 Input Clutch Hub, Retainer, and OD/Reverse Piston

1 - SNAP RING (INPUT SHAFT)
2 - SNAP RING
3 - CLUTCH RETAINER
4 - SEAL, OUTER
5 - SEAL, INNER
6 - OD/REVERSE PISTON
7 - SEAL, INPUT SHAFT
8 - SHAFT, INPUT
9 - HUB
10 - SEAL
11 - SNAP RING
12 - BELLEVILLE SPRING

INPUT CLUTCH ASSEMBLY (Continued)

(7) Install UD clutch piston (Fig. 221).

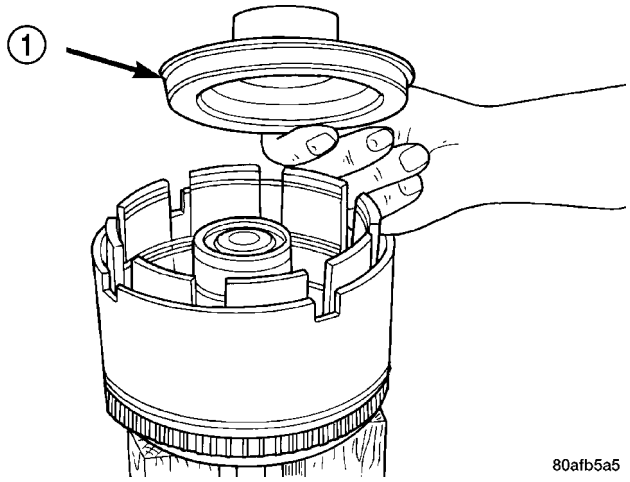

Fig. 221 Underdrive Clutch Piston

1 - PISTON

(8) Install UD piston return spring and Tool 5067 as shown in (Fig. 222).

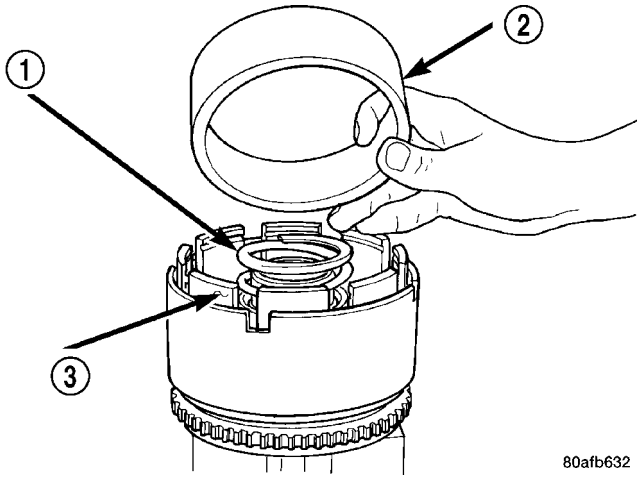

Fig. 222 Seal Compressor Special Tool 5067

1 - PISTON RETURN SPRING
2 - SPECIAL TOOL 5067
3 - INPUT SHAFT CLUTCHES RETAINER ASSEMBLY

(9) Using Tool 5059A and an arbor press, Install the UD spring retainer and snap ring (Fig. 223) (Fig. 224) (Fig. 225) Compress just enough to install snap ring.

CAUTION: Compress return spring just enough to install snap ring.

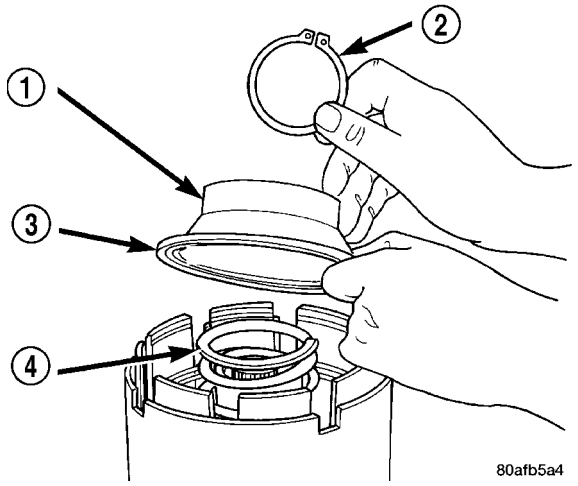

Fig. 223 UD Return Spring and Retainer

1 - UNDERDRIVE SPRING RETAINER
2 - SNAP RING
3 - SEAL
4 - PISTON RETURN SPRING

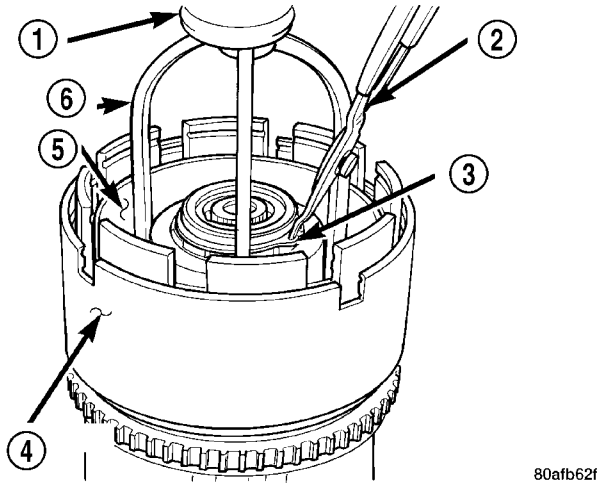

Fig. 224 Install UD Spring Retainer and Snap Ring

1 - ARBOR PRESS RAM
2 - SNAP RING PLIERS
3 - SNAP RING
4 - OD/REVERSE PISTON
5 - TOOL 5067
6 - TOOL 5059A

INPUT CLUTCH ASSEMBLY (Continued)

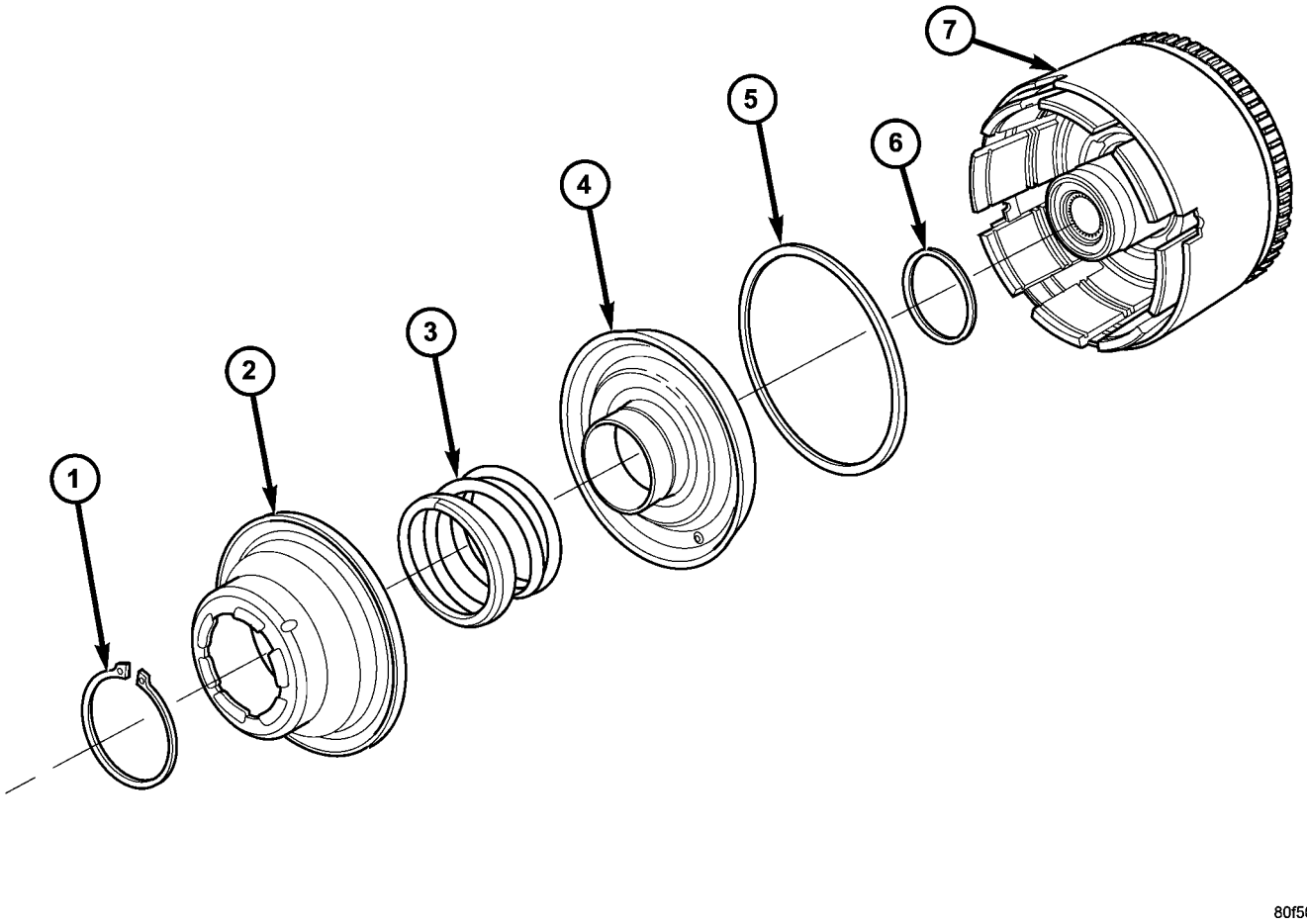

Fig. 225 Underdrive Clutch Piston, Spring and Retainer

1 - SNAP RING
2 - SPRING RETAINER
3 - SPRING
4 - UD CLUTCH PISTON
5 - SEAL, OUTER
6 - SEAL, INNER
7 - INPUT CLUTCH ASSEMBLY

INPUT CLUTCH ASSEMBLY (Continued)

(10) Install the UD clutch pack. Leave out upper disc, until snap ring is installed (Fig. 226).

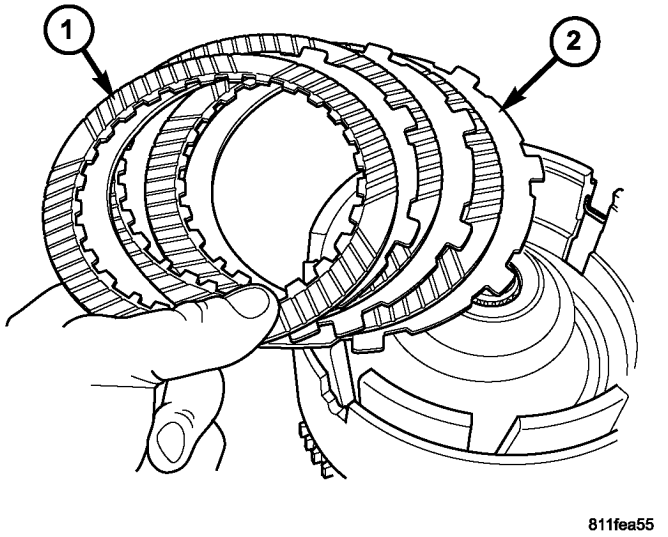

Fig. 226 Install Underdrive Clutch Pack

1 - CLUTCH DISC
2 - CLUTCH PLATE

(11) Install the UD clutch flat snap ring (Fig. 227).

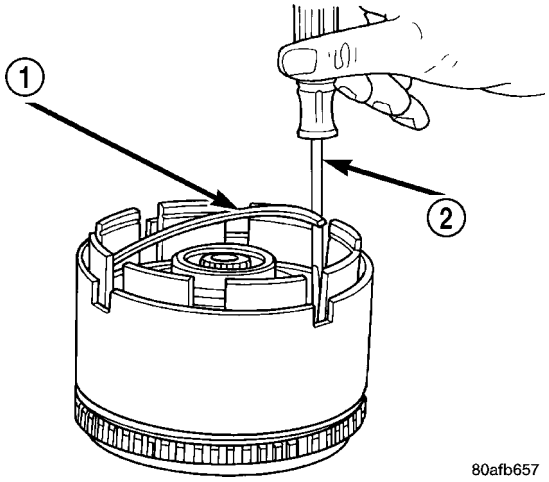

Fig. 227 UD Clutch Flat Snap Ring

1 - UNDERDRIVE CLUTCH REACTION PLATE FLAT SNAP RING
2 - SCREWDRIVER

(12) Install the last UD clutch disc (Fig. 228).

(13) Install the OD/UD clutch reaction plate and snap ring (Fig. 229) (Fig. 230). The OD/UD clutches reaction plate has a step on both sides. Install the OD/UD clutches reaction plate tapered step side up.

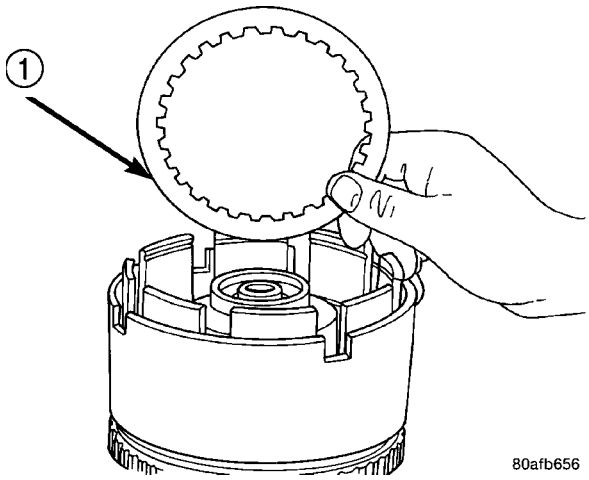

Fig. 228 Install Last UD Clutch Disc

1 - ONE UNDERDRIVE CLUTCH DISC

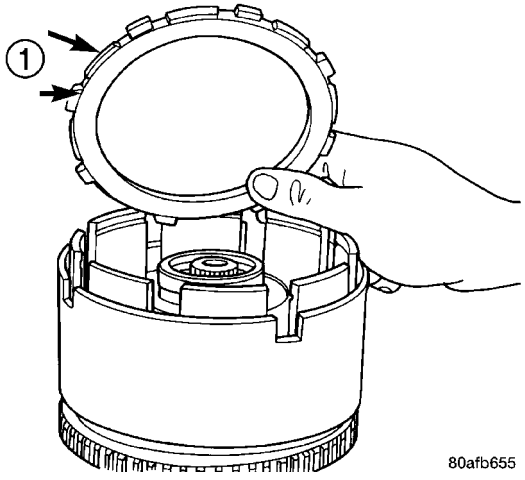

Fig. 229 OD/UD Reaction Plate

1 - OD/UD CLUTCH REACTION PLATE (TAPERED STEP SIDE UP)

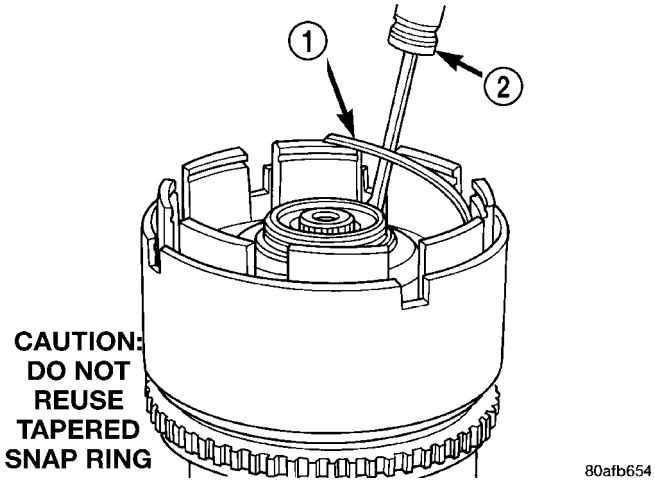

Fig. 230 Tapered Snap Ring

1 - OVERDRIVE/UNDERDRIVE CLUTCHES REACTION PLATE TAPERED SNAP RING
2 - SCREWDRIVER (DO NOT SCRATCH REACTION PLATE)

INPUT CLUTCH ASSEMBLY (Continued)

NOTE: Snap ring ends must be located within one finger of the input clutch hub. Be sure that snap ring is fully seated, by pushing with screwdriver, into snap ring groove all the way around.

(14) Seat tapered snap ring to ensure proper installation (Fig. 231) (Fig. 232).

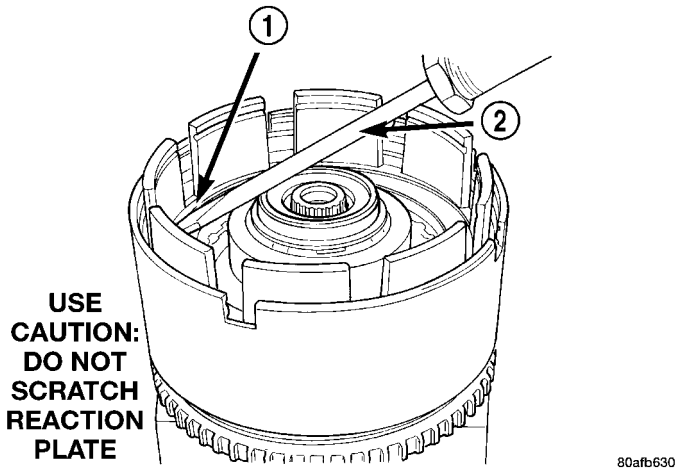

Fig. 231 Seating Tapered Snap Ring

1 - OVERDRIVE/UNDERDRIVE CLUTCHES REACTION PLATE TAPERED SNAP RING
2 - SCREWDRIVER

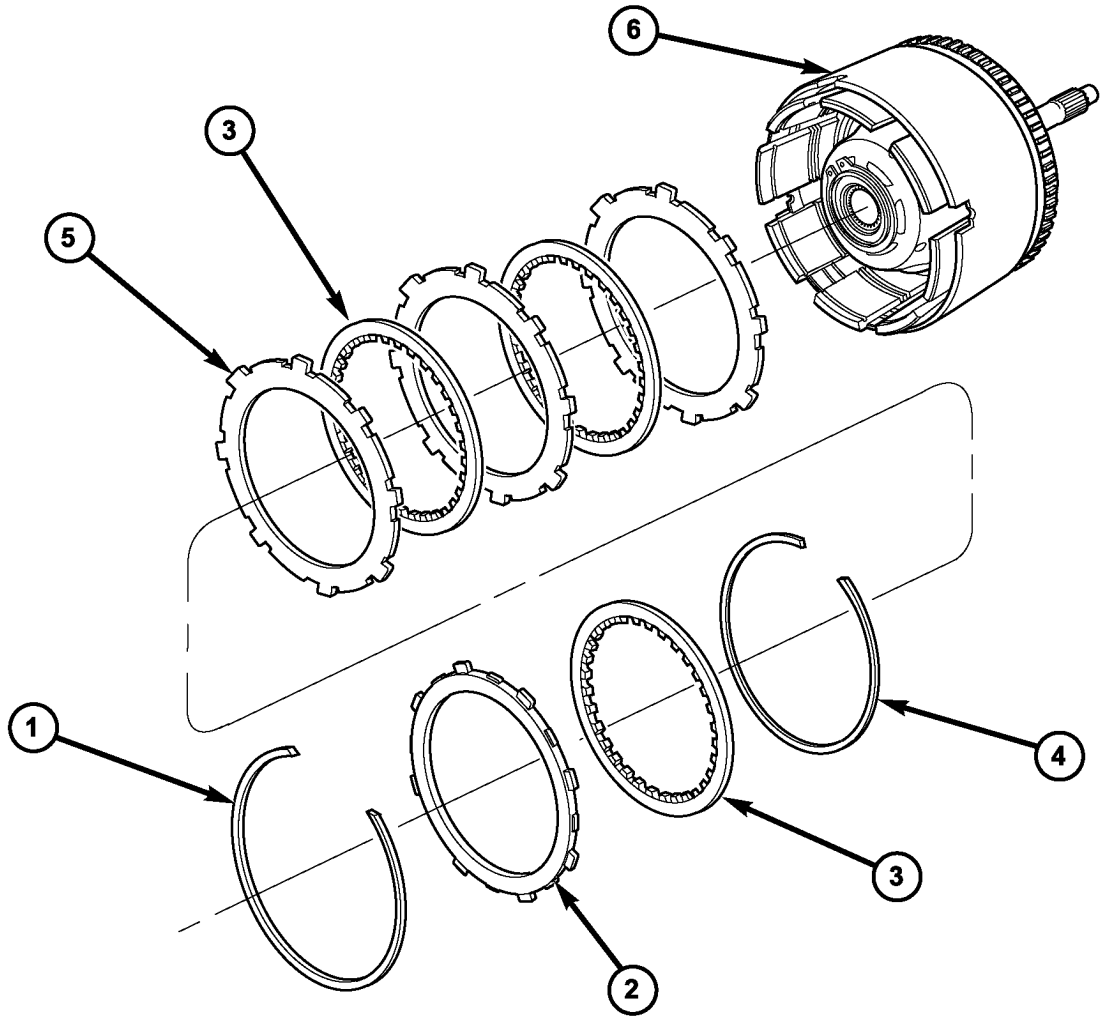

Fig. 232 Underdrive Clutch Assembly

1 - SNAP RING (TAPERED)
2 - OD/UD REACTION PLATE
3 - CLUTCH DISC (3)
4 - SNAP RING (FLAT)
5 - CLUTCH PLATE (3)
6 - INPUT CLUTCH ASSEMBLY

INPUT CLUTCH ASSEMBLY (Continued)

(15) Install input clutch assembly to the Input Clutch Pressure Fixture–Tool 8391 (Fig. 233).

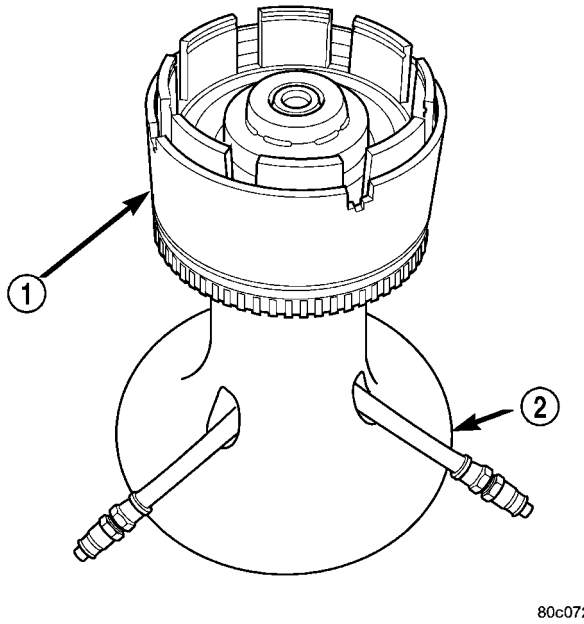

Fig. 233 Input Clutch Assembly on Pressure Fixture Tool 8391

1 - INPUT CLUTCH ASSEMBLY
2 - INPUT CLUTCH PRESSURE FIXTURE 8391

(16) Set up dial indicator on the UD clutch pack as shown in (Fig. 234).

(17) Using moderate pressure, press down and hold (near indicator) the UD clutch pack with screwdriver or suitable tool and zero dial indicator (Fig. 235). When releasing pressure on clutch pack, indicator reading should advance 0.005–0.010.

CAUTION: Do not apply more than 30 psi (206 kPa) to the underdrive clutch pack.

(18) Apply 30 psi (206 kPa) to the underdrive hose on Tool 8391 and measure UD clutch clearance. Measure and record UD clutch pack measurement in four (4) places, 90° apart.

(19) Take average of four measurements and compare with UD clutch pack clearance specification. **Underdrive clutch pack clearance must be 0.94-1.50 mm (0.037-0.059 in.).**

(20) If necessary, select the proper reaction plate to achieve specifications:

UNDERDRIVE REACTION PLATE THICKNESS	
4659939AB	5.837-5.937 mm (0.230-0.234 in.)
4659940AB	6.147-6.248 mm (0.242-0.246 in.)
4659941AB	6.457-6.557 mm (0.254-0.258 in.)

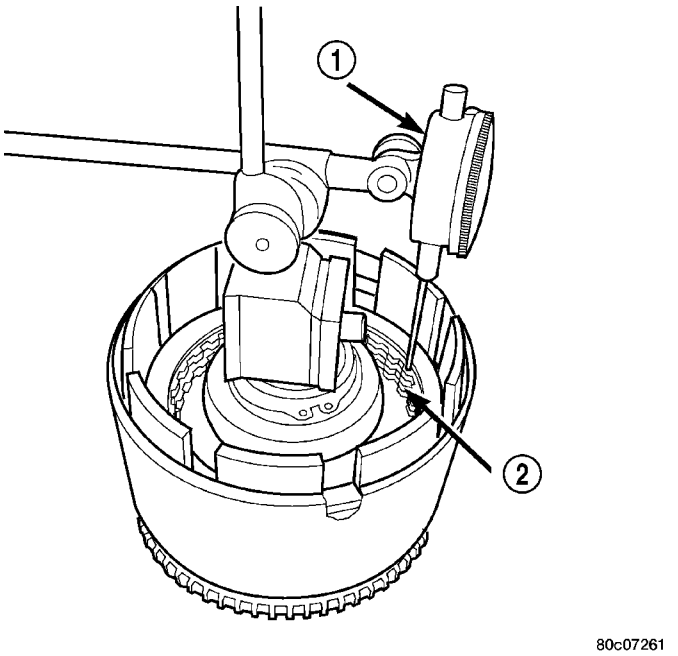

Fig. 234 Set Up Dial Indicator to Measure UD Clutch Clearance

1 - DIAL INDICATOR
2 - UNDERDRIVE CLUTCH

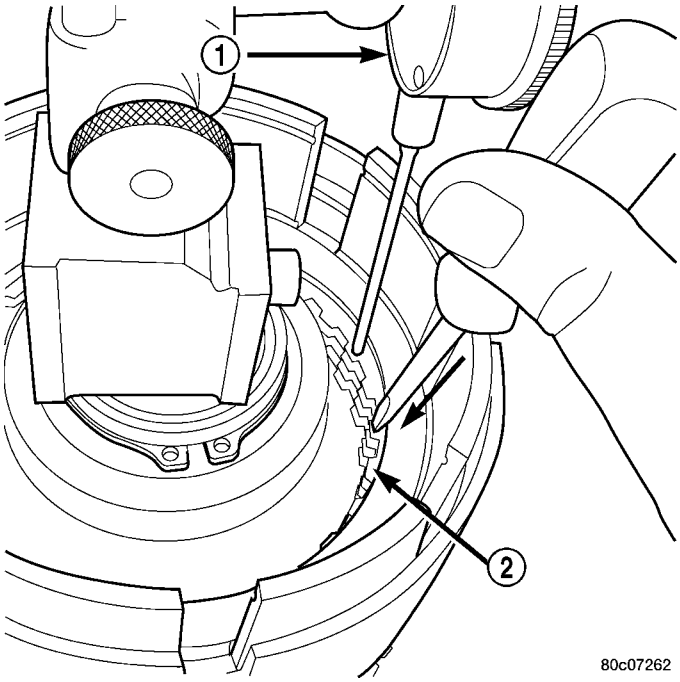

Fig. 235 Press Down on UD Clutch Pack and Zero Dial Indicator

1 - DIAL INDICATOR
2 - UNDERDRIVE CLUTCH

INPUT CLUTCH ASSEMBLY (Continued)

(21) Install the OD clutch pack (Fig. 236).

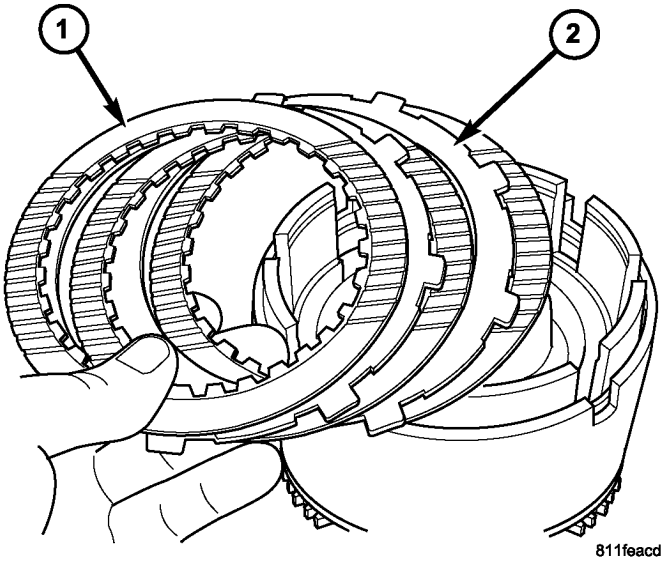

Fig. 236 Install Overdrive Clutch Pack

1 - CLUTCH DISC
2 - CLUTCH PLATE

(22) Install OD pressure plate waved snap ring (Fig. 237).

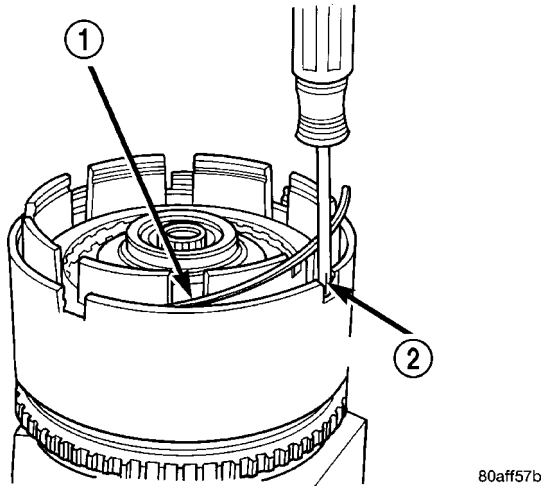

Fig. 237 Install Waved Snap Ring

1 - OVERDRIVE PRESSURE PLATE WAVED SNAP RING
2 - SCREWDRIVER

(23) Install the OD/Reverse pressure plate with large step down (towards OD clutch pack) (Fig. 238).

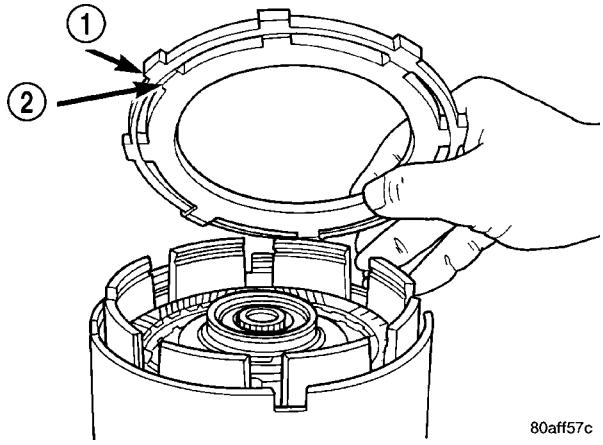

Fig. 238 OD/Reverse Reaction Plate

1 - OVERDRIVE/REVERSE PRESSURE PLATE
2 - (STEP SIDE DOWN)

(24) Install OD pressure plate flat snap ring (Fig. 239) (Fig. 240).

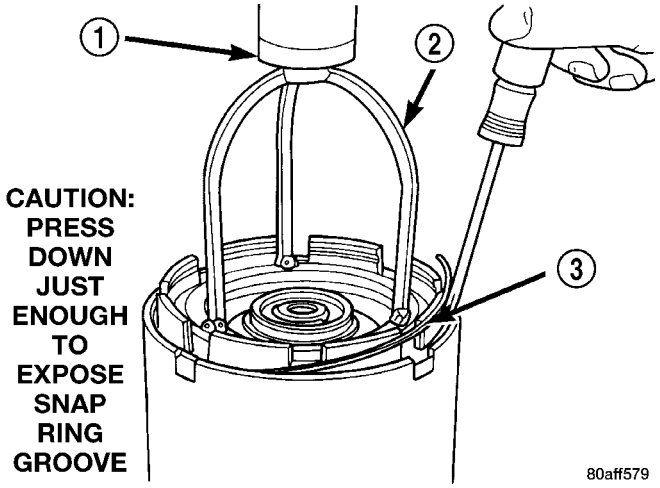

Fig. 239 Install Flat Snap Ring

1 - ARBOR PRESS RAM
2 - TOOL 5059A
3 - FLAT SNAP RING

INPUT CLUTCH ASSEMBLY (Continued)

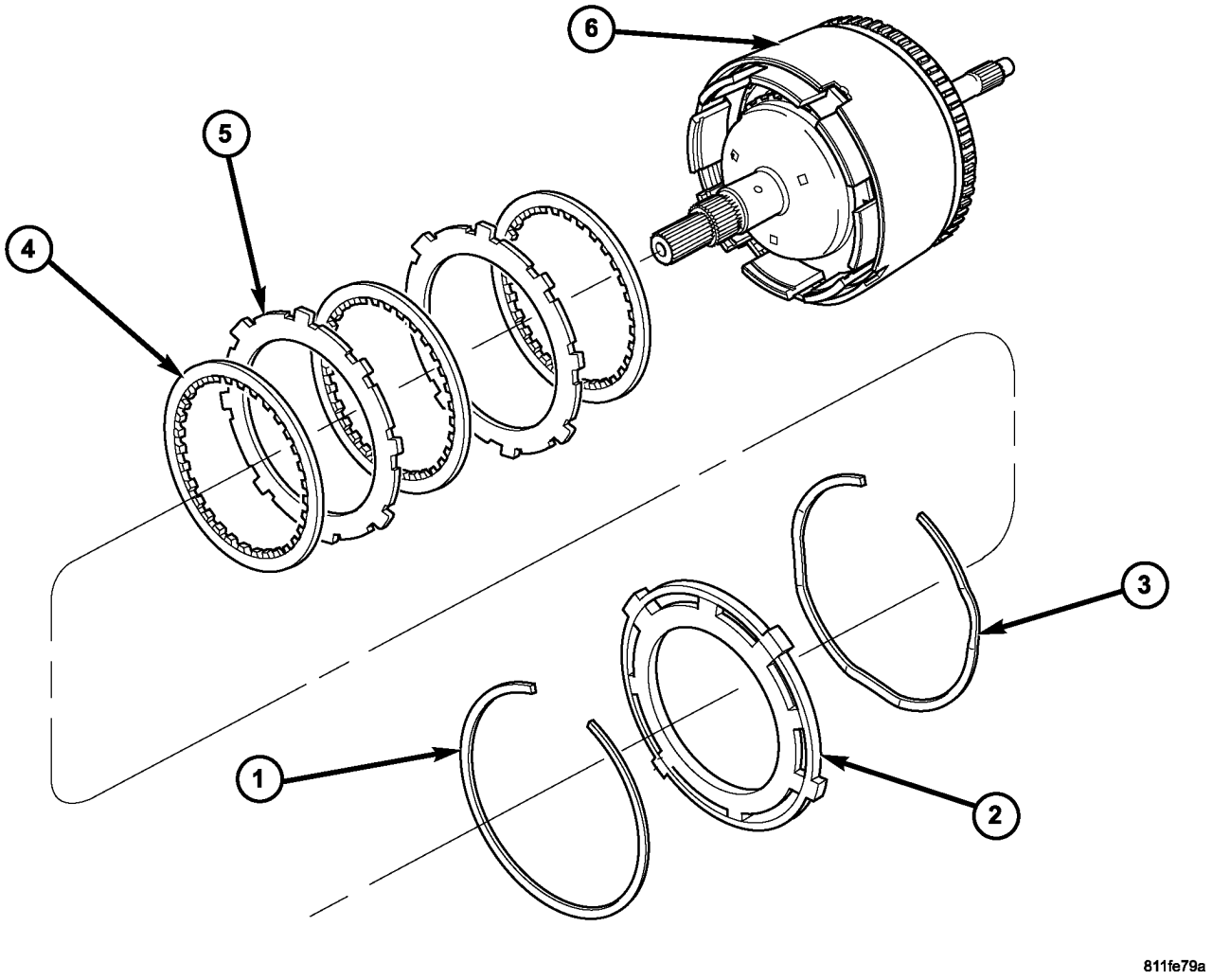

Fig. 240 Overdrive Clutch Assembly

1 - SNAP RING
2 - OD/REVERSE PRESSURE PLATE
3 - SNAP RING (WAVE)
4 - CLUTCH DISC (3)
5 - CLUTCH STEEL (2)
6 - INPUT CLUTCH ASSEMBLY

INPUT CLUTCH ASSEMBLY (Continued)

(25) Measure OD clutch pack clearance. Set up dial indicator on top of the OD/Reverse pressure plate as shown in (Fig. 241).

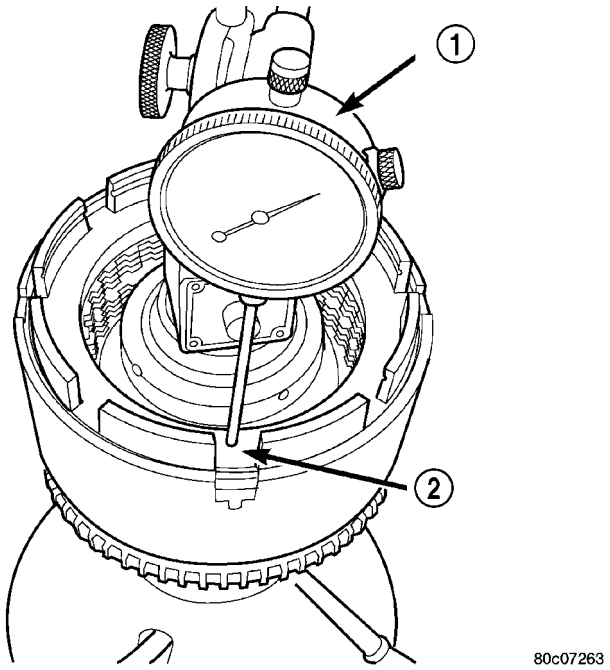

Fig. 241 Measure OD Clutch Pack Clearance

1 - DIAL INDICATOR
2 - OD/REVERSE REACTION PLATE

(26) Zero dial indicator and apply 30 psi (206 kPa) air pressure to the overdrive clutch hose on Tool 8391. Measure and record OD clutch pack measurement in four (4) places, 90° apart.

(27) Take average of four measurements and compare with OD clutch pack clearance specification. **The overdrive (OD) clutch pack clearance is 1.07-3.25 mm (0.042-0.128 in.).**

If not within specifications, the clutch is not assembled properly. There is no adjustment for the OD clutch clearance.

(28) Install reverse clutch pack (two frictions/one steel) (Fig. 242).

(29) Install reverse clutch reaction plate with the flat side down towards reverse clutch (Fig. 243).

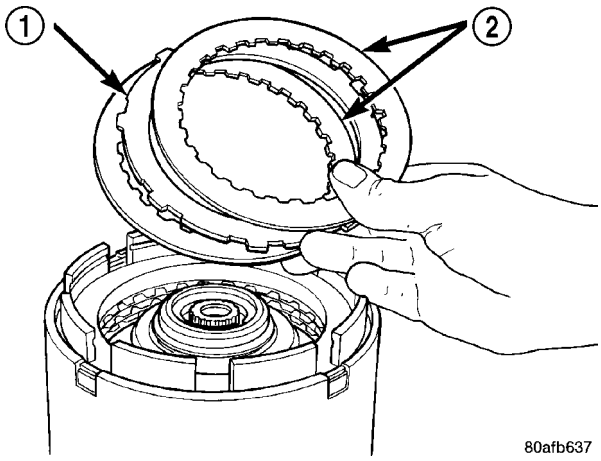

Fig. 242 Install Reverse Clutch Pack

1 - REVERSE CLUTCH PLATE
2 - REVERSE CLUTCH DISCS

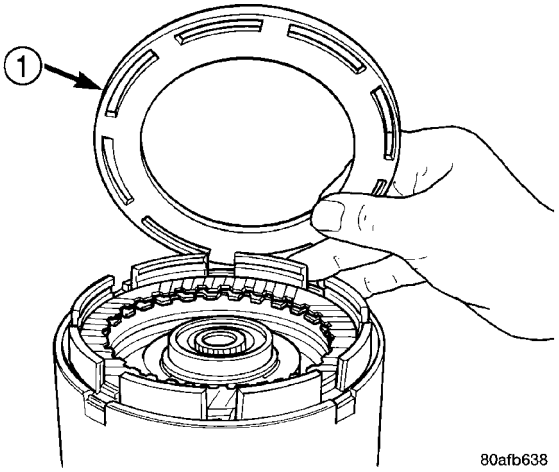

Fig. 243 Install Reaction Plate

1 - REVERSE CLUTCH REACTION PLATE (FLAT SIDE DOWN)

INPUT CLUTCH ASSEMBLY (Continued)

(30) Tap reaction plate down to allow installation of the reverse clutch snap ring. Install reverse clutch snap ring (Fig. 244) (Fig. 245).

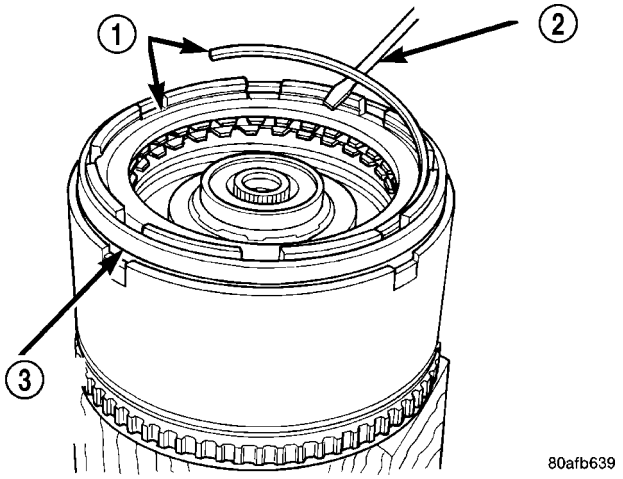

Fig. 244 Install Reverse Clutch Snap Ring

1 - REVERSE CLUTCH SNAP RING (SELECT)
2 - SCREWDRIVER
3 - REVERSE CLUTCH REACTION PLATE

(31) Pry up reverse reaction plate to seat against snap ring (Fig. 246).

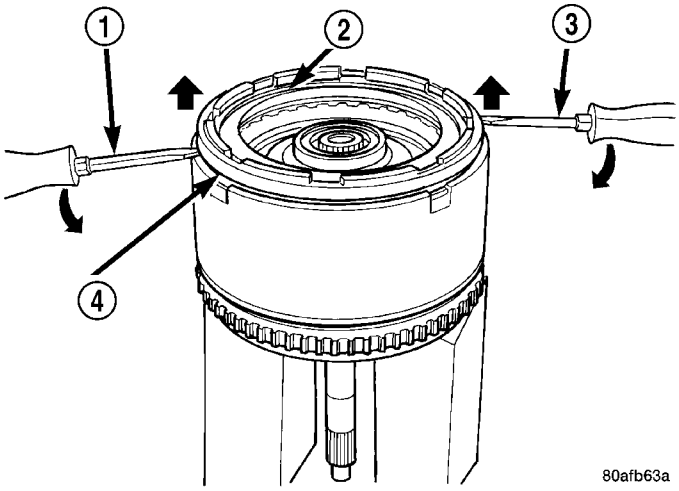

Fig. 246 Pry Up Reaction Plate

1 - SCREWDRIVER
2 - SNAP RING
3 - SCREWDRIVER
4 - MUST RAISE REVERSE REACTION PLATE TO RAISE SNAP RING

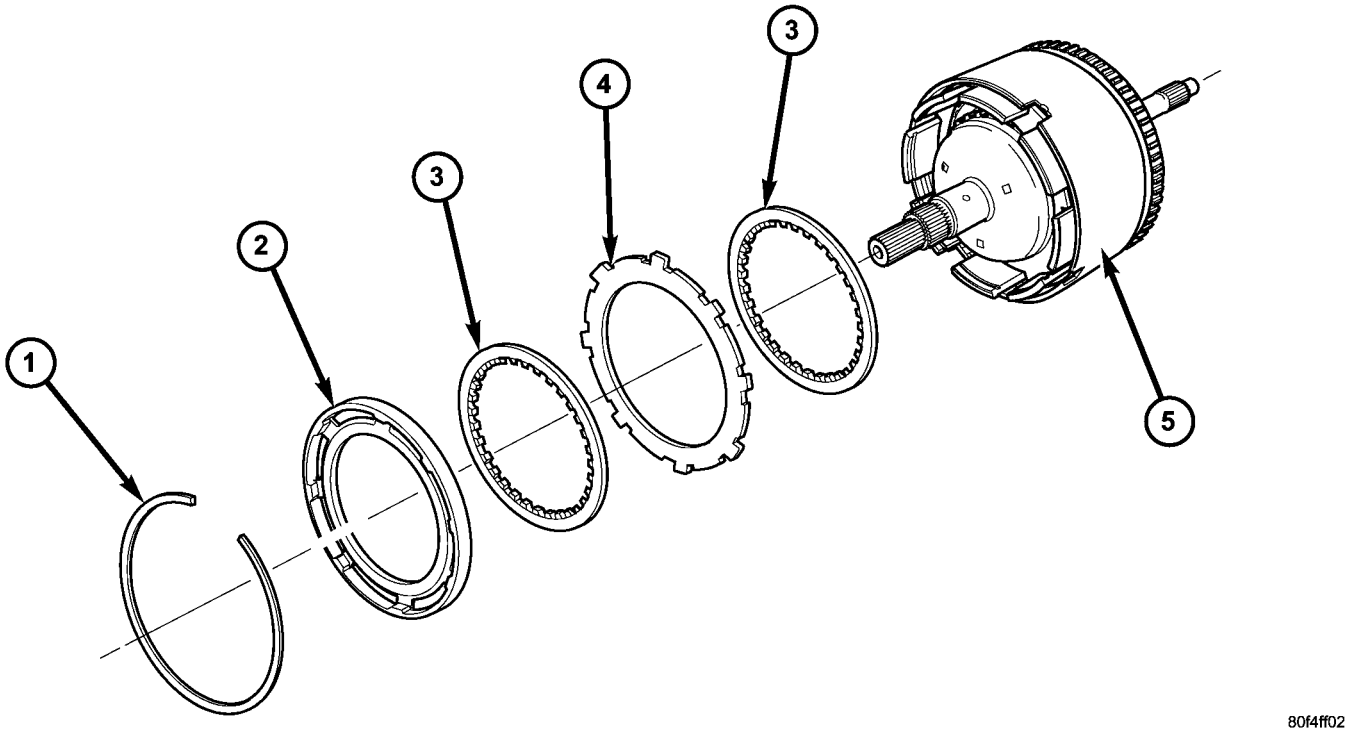

Fig. 245 Reverse Clutch Assembly

1 - SNAP RING
2 - REACTION PLATE
3 - CLUTCH DISC (2)
4 - CLUTCH PLATE (1)
5 - INPUT CLUTCH ASSEMBLY

INPUT CLUTCH ASSEMBLY (Continued)

(32) Set up a dial indicator on the reverse clutch pack as shown in (Fig. 247).

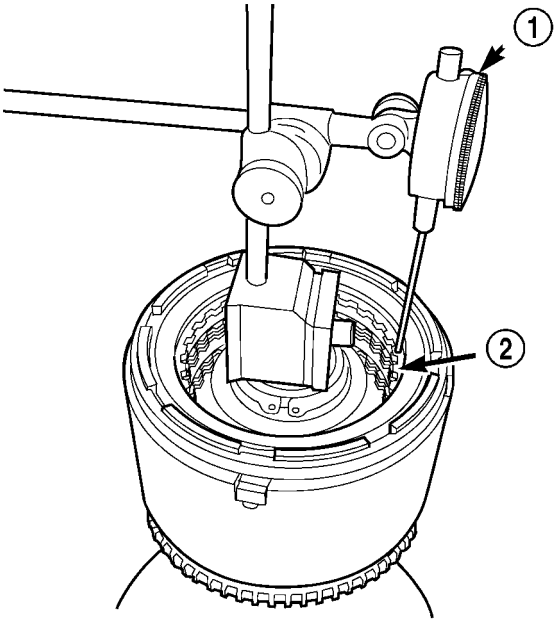

Fig. 247 Measure Reverse Clutch Pack Clearance

1 - DIAL INDICATOR
2 - REVERSE CLUTCH

(33) Using moderate pressure, press down and hold (near indicator) reverse clutch disc with screwdriver or suitable tool and zero dial indicator (Fig. 248). When releasing pressure, indicator should advance 0.005-0.010. as clutch pack relaxes.

(34) Apply 30 psi (206 kPa) air pressure to the reverse clutch hose on Tool 8391. Measure and record reverse clutch pack measurement in four (4) places, 90° apart.

(35) Take average of four measurements and compare with reverse clutch pack clearance specification. **The reverse clutch pack clearance is 0.89-1.37 mm (0.035-0.054 in.).** Select the proper reverse clutch snap ring to achieve specifications:

REVERSE CLUTCH SNAP RING THICKNESS	
4377195	1.53-1.58 mm (0.060-0.062 in.)
4412871	1.77-1.83 mm (0.070-0.072 in.)
4412872	2.02-2.07 mm (0.080-0.082 in.)
4412873	2.27-2.32 mm (0.090-0.091 in.)

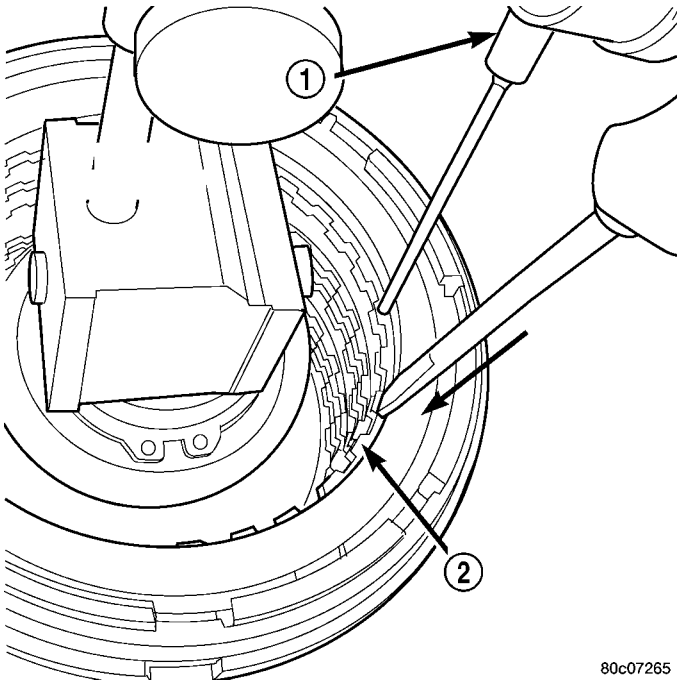

Fig. 248 Press Down on Reverse Clutch and Zero Indicator

1 - DIAL INDICATOR
2 - REVERSE CLUTCH

(36) To complete the assembly, reverse clutch and overdrive clutch must be removed.

(37) Install the #2 needle bearing (Fig. 249).

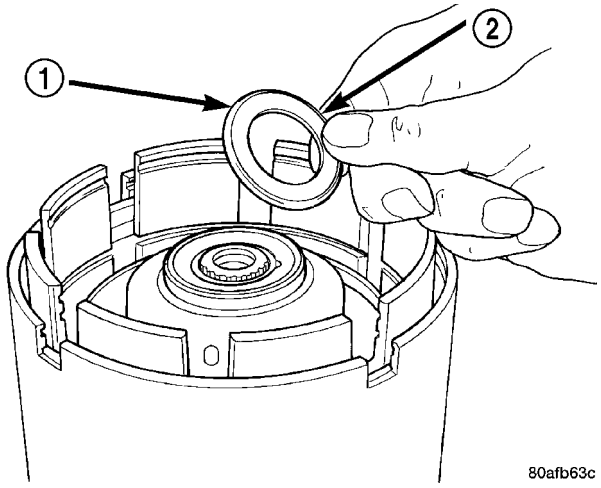

Fig. 249 Install No. 2 Needle Bearing

1 - #2 NEEDLE BEARING (NOTE 3 SMALL TABS)
2 - TABS UP

INPUT CLUTCH ASSEMBLY (Continued)

(38) Install the underdrive shaft assembly (Fig. 250).

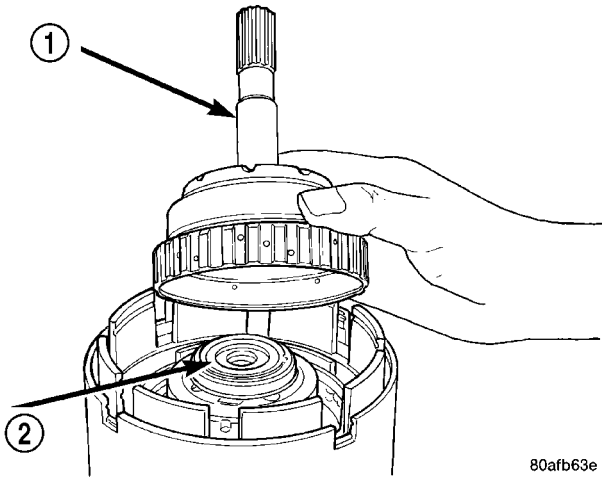

Fig. 250 Install Underdrive Shaft Assembly

1 - UNDERDRIVE SHAFT ASSEMBLY
2 - #2 NEEDLE BEARING

(39) Install the #3 thrust washer to the underdrive shaft assembly. Be sure five tabs are seated properly (Fig. 251).

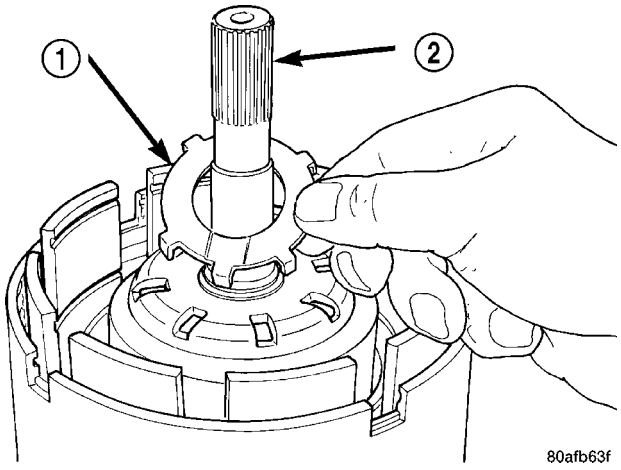

Fig. 251 Install No. 3 Thrust Washer

1 - #3 THRUST WASHER (NOTE 5 TABS)
2 - UNDERDRIVE SHAFT ASSEMBLY

(40) Install the #3 thrust plate to the bottom of the overdrive shaft assembly. Retain with petrolatum or transmission assembly gel (Fig. 252).

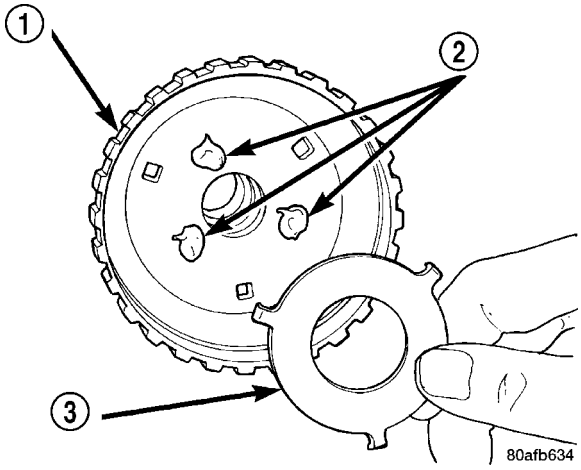

Fig. 252 Install No. 3 Thrust Plate

1 - OVERDRIVE SHAFT ASSEMBLY
2 - DABS OF PETROLATUM (FOR RETENTION)
3 - #3 THRUST PLATE (NOTE 3 TABS)

(41) Install the overdrive shaft assembly (Fig. 253) (Fig. 254).

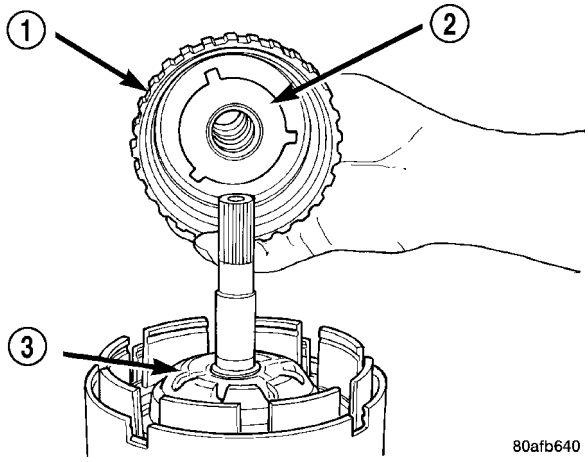

Fig. 253 Install Overdrive Shaft Assembly

1 - OVERDRIVE SHAFT ASSEMBLY
2 - #3 THRUST PLATE
3 - #3 THRUST WASHER

(42) Reinstall overdrive and reverse clutch as shown. **Rechecking these clutch clearances is not necessary.**

INPUT CLUTCH ASSEMBLY (Continued)

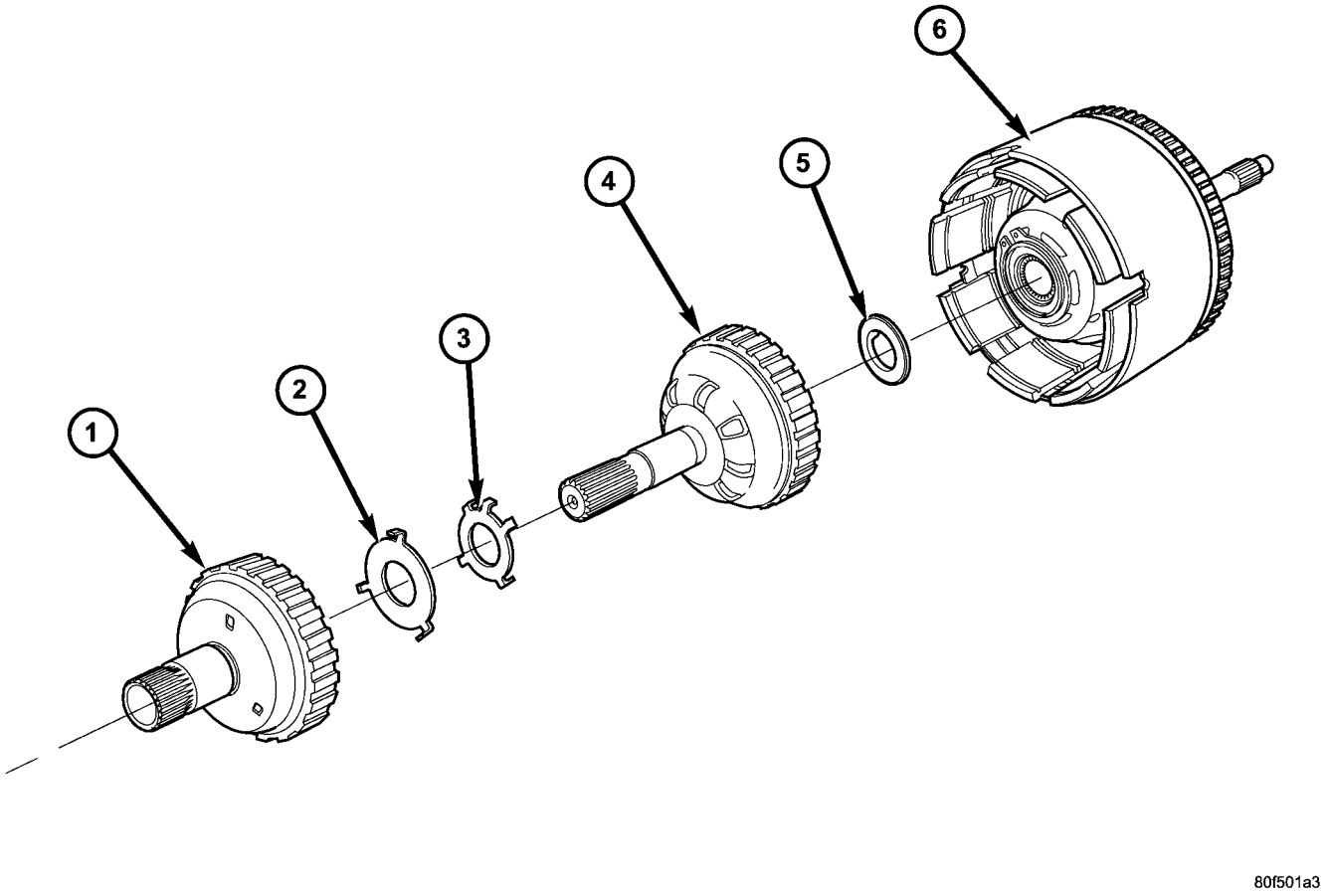

Fig. 254 Overdrive/Underdrive Shafts

1 - OVERDRIVE SHAFT
2 - #3 THRUST PLATE (3 TABS)
3 - #3 THRUST WASHER (5 TABS)
4 - UNDERDRIVE SHAFT
5 - #2 NEEDLE BEARING (3 TABS)
6 - INPUT CLUTCH ASSEMBLY

OIL PUMP

DESCRIPTION

The oil pump is located in the pump housing inside the bell housing of the transaxle case (Fig. 255). The oil pump consists of an inner and outer gear, a housing, and a cover that also serves as the reaction shaft support.

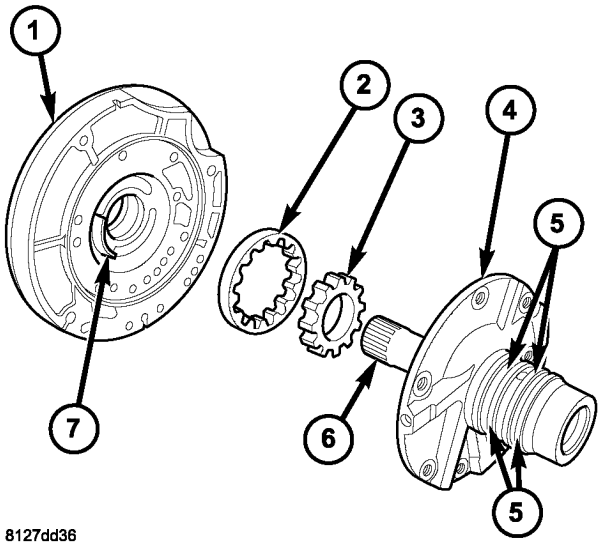

Fig. 255 Oil Pump Assembly

1 - PUMP BODY
2 - OUTER GEAR
3 - INNER GEAR
4 - REACTION SHAFT SUPPORT
5 - SEAL RINGS (4)
6 - REACTION SHAFT
7 - CRESCENT

OPERATION

As the torque converter rotates, the converter hub rotates the inner and outer gears. As the gears rotate, the clearance between the gear teeth increases in the crescent area, and creates a suction at the inlet side of the pump. This suction draws fluid through the pump inlet from the oil pan. As the clearance between the gear teeth in the crescent area decreases, it forces pressurized fluid into the pump outlet and to the valve body.

DISASSEMBLY

When disassembling the transaxle it is necessary to inspect the oil pump for wear and damage.

(1) Remove the reaction shaft support-to-pump body bolts (Fig. 256).

(2) Remove reaction shaft support from pump housing (Fig. 257).

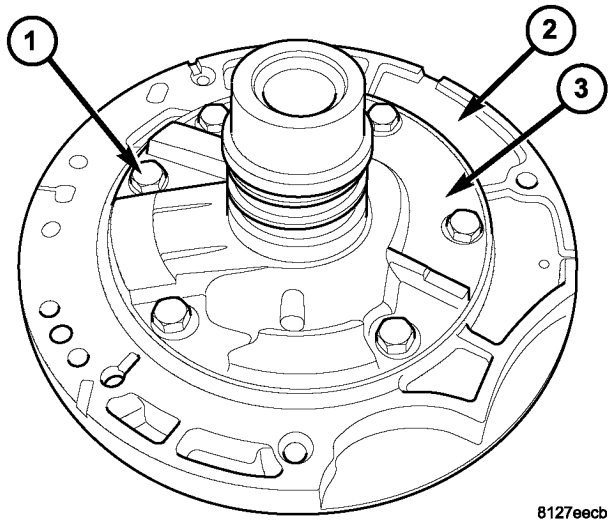

Fig. 256 Reaction Support-to-Pump Body Bolts

1 - BOLT (6)
2 - PUMP BODY
3 - REACTION SHAFT SUPPORT

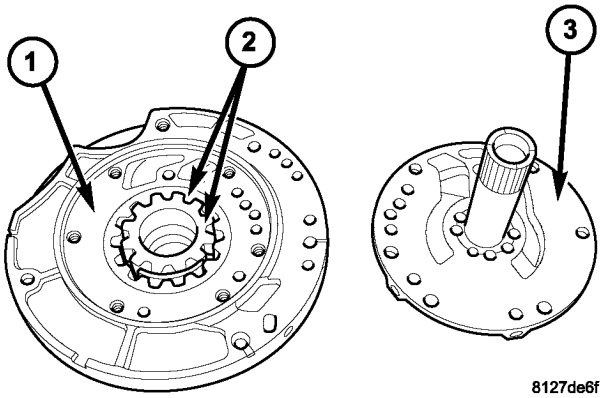

Fig. 257 Reaction Shaft Support

1 - PUMP BODY
2 - PUMP GEARS
3 - REACTION SHAFT SUPPORT

OIL PUMP (Continued)

(3) Remove the pump gears (Fig. 258) and check for wear and damage on pump housing and gears.

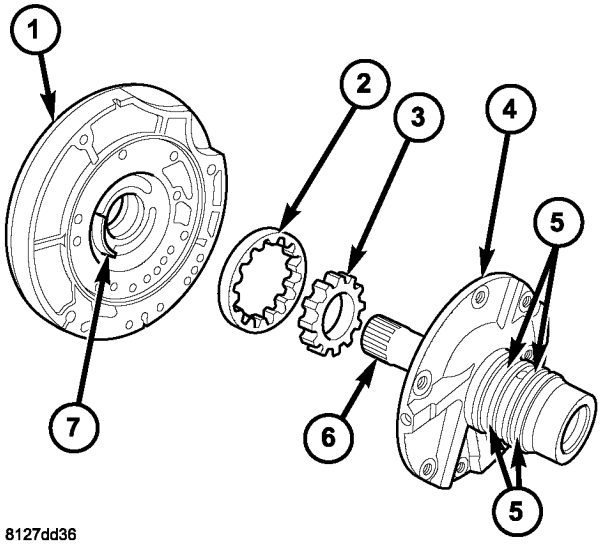

Fig. 258 Oil Pump Assembly

1 - PUMP BODY
2 - OUTER GEAR
3 - INNER GEAR
4 - REACTION SHAFT SUPPORT
5 - SEAL RINGS (4)
6 - REACTION SHAFT
7 - CRESCENT

(4) Re-install the gears and check clearances.

(5) Measure the clearance between the outer gear and the pump pocket (Fig. 259). Clearance should be 0.089–0.202 mm (0.0035-0.0079 in.).

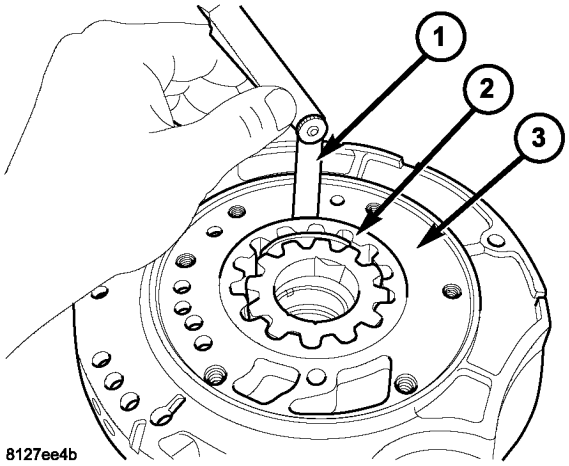

Fig. 259 Measuring Outer Gear-to-Pocket

1 - FEELER GAUGE
2 - OUTER GEAR
3 - PUMP BODY

(6) Measure clearance between outer gear and crescent (Fig. 260). Clearance should be 0.060-0.298 mm (0.0023-0.0117 in.).

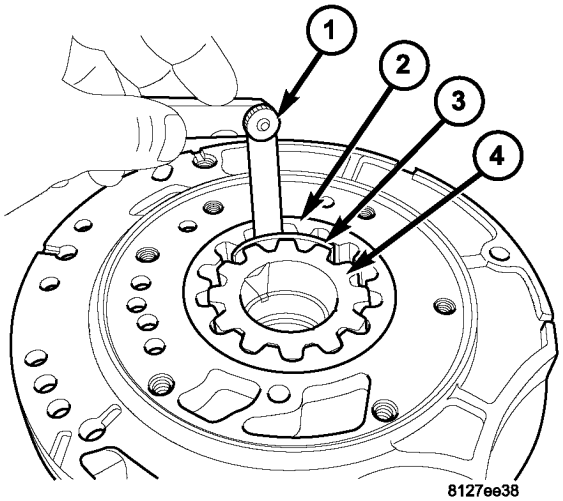

Fig. 260 Measuring Outer Gear-to-Crescent

1 - FEELER GAUGE
2 - OUTER GEAR
3 - CRESCENT
4 - INNER GEAR

(7) Measure clearance between inner gear and crescent (Fig. 261). Clearance should be 0.093-0.385 mm (0.0036-0.0151 in.).

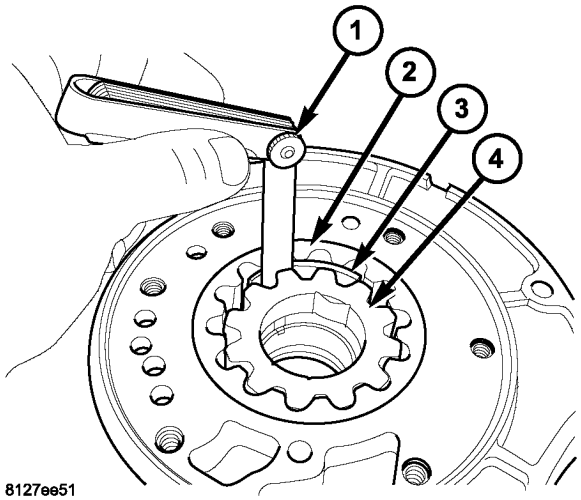

Fig. 261 Measuring Inner Gear-to-Crescent

1 - FEELER GAUGE
2 - OUTER GEAR
3 - CRESCENT
4 - INNER GEAR

OIL PUMP (Continued)

(8) Position an appropriate piece of Plastigage across both pump gears.

(9) Align the Plastigage to a flat area on the reaction shaft support housing.

(10) Install the reaction shaft to the pump housing (Fig. 256). Tighten the bolts to 27 N·m (20 ft. lbs.).

(11) Remove bolts and carefully separate the housings. Measure the Plastigage following the instructions supplied.

(12) Clearance between both gear end faces and the reaction shaft support should be 0.020-0.046 mm (0.0008-0.0018 in.).

ASSEMBLY

(1) Assemble oil pump as shown in (Fig. 262).

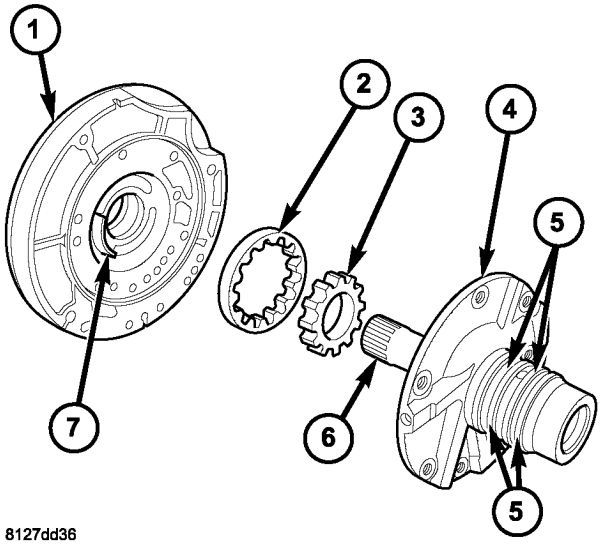

Fig. 262 Oil Pump Assembly

1 - PUMP BODY
2 - OUTER GEAR
3 - INNER GEAR
4 - REACTION SHAFT SUPPORT
5 - SEAL RINGS (4)
6 - REACTION SHAFT
7 - CRESCENT

(2) Install and torque reaction shaft support-to-oil pump housing bolts to 28 N·m (20 ft. lbs.) torque (Fig. 263).

PLANETARY GEARTRAIN

DESCRIPTION

The planetary geartrain is located between the input clutch assembly and the rear of the transaxle case. The planetary geartrain consists of two sun gears, two planetary carriers, two annulus (ring) gears, and one output shaft (Fig. 264).

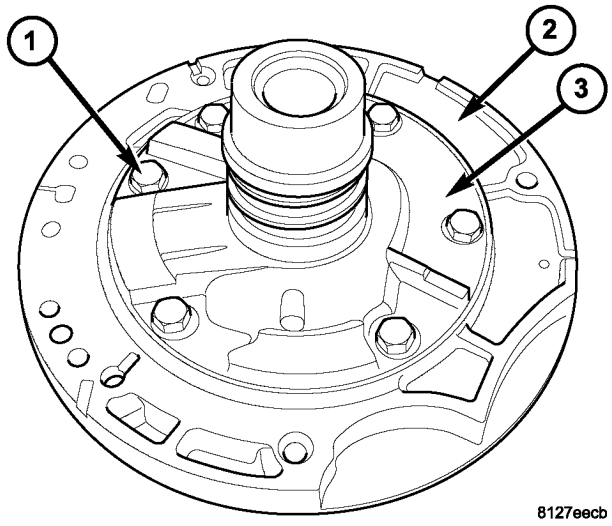

Fig. 263 Reaction Support-to-Pump Body Bolts

1 - BOLT (6)
2 - PUMP BODY
3 - REACTION SHAFT SUPPORT

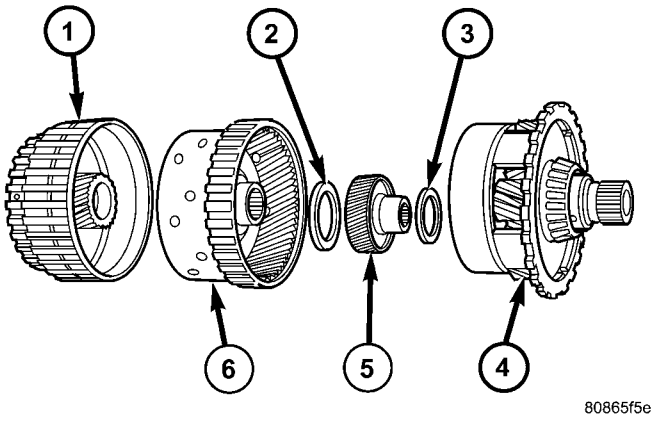

Fig. 264 Planetary Geartrain

1 - FRONT SUN GEAR ASSEMBLY
2 - #6 THRUST BEARING
3 - #7 THRUST BEARING
4 - REAR CARRIER/FRONT ANNULUS ASSEMBLY
5 - REAR SUN GEAR
6 - FRONT CARRIER/REAR ANNULUS ASSEMBLY

OPERATION

The planetary geartrain utilizes two planetary gear sets that connect the transmission input shaft to the output shaft. Input and holding clutches drive or lock different planetary members to change output ratio or direction.

SEAL - OIL PUMP

REMOVAL

(1) Remove transaxle from vehicle (Refer to 21 - TRANSMISSION/TRANSAXLE/AUTOMATIC - 41TE - REMOVAL).

(2) Using Tool C-3981-B, remove oil pump seal (Fig. 265).

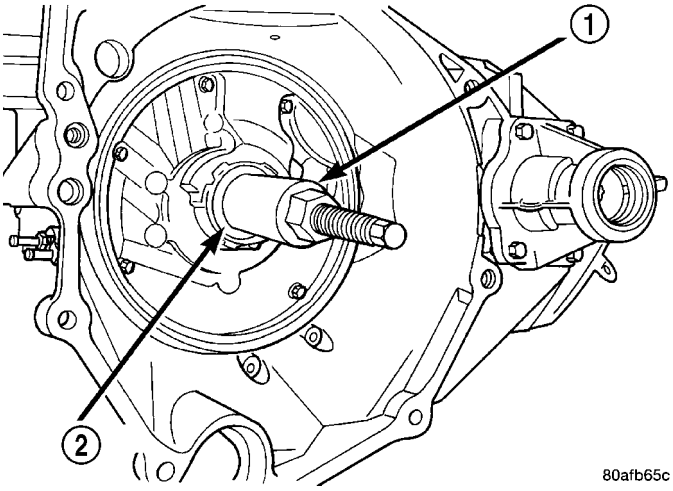

Fig. 265 Remove Oil Pump Seal

1 - TOOL C-3981–B
2 - OIL PUMP SEAL

INSTALLATION

(1) Using Tool C-4193, install oil pump seal (Fig. 266).

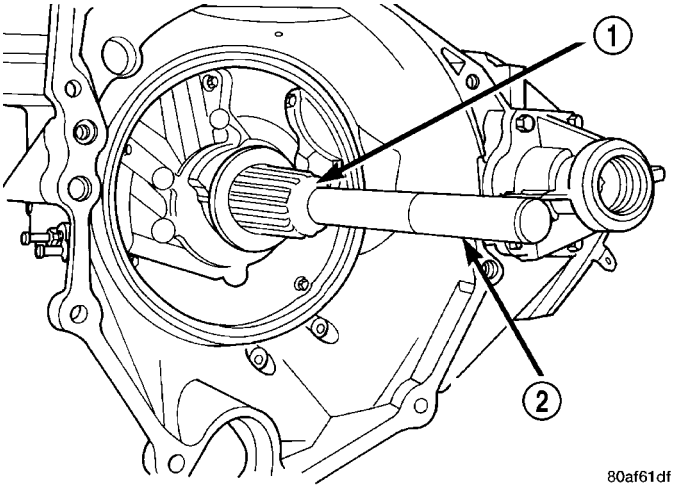

Fig. 266 Install Oil Pump Seal

1 - TOOL C-4193
2 - HANDLE TOOL C-4171

(2) Install transaxle to vehicle (Refer to 21 - TRANSMISSION/TRANSAXLE/AUTOMATIC - 41TE - INSTALLATION).

SHIFT INTERLOCK SOLENOID

DESCRIPTION

The Brake/Transmission Shift Interlock system consists of an electro-magnetic solenoid mounted to the steering column (Fig. 267). The solenoid's plunger consists of an integrated hook, which operates the shift lever pawl (part of shift lever assembly), and a plunger return spring (Fig. 268). The solenoid also has an integrated bracket, which facilitates fastening to the steering column.

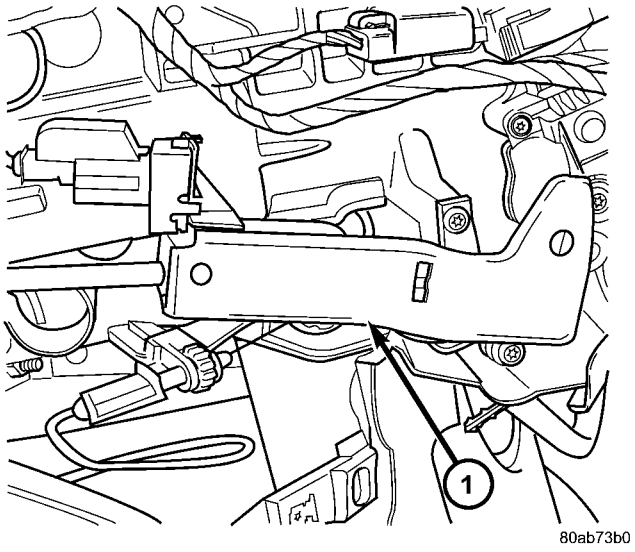

Fig. 267 Brake/Transmission Shift Interlock (BTSI) Solenoid Location

1 - BTSI SOLENOID

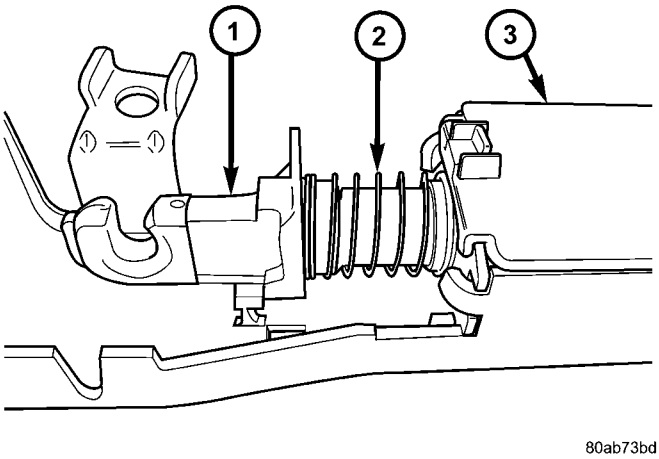

Fig. 268 Solenoid Plunger and Return Spring

1 - PLUNGER
2 - RETURN SPRING
3 - BTSI SOLENOID

SHIFT INTERLOCK SOLENOID (Continued)

OPERATION

The Brake/Transmission Shift Interlock (BTSI) Solenoid prevents the transmission shift lever from being moved out of PARK (P) unless the brake pedal is applied. The BTSI solenoid is hardwired to and controlled by the Intelligent Power Module (IPM). Battery voltage is applied to one side of the solenoid with the ignition key is in either the OFF, ON/RUN, or START positions (Fig. 269). The ground side of the solenoid is controlled by a driver within the IPM. It relies on voltage supplied from the stop lamp switch to the stop lamp sense circuit within the IPM to tell when the brake pedal is depressed. When the brake pedal is depressed, the ground circuit opens, de-energizing the solenoid. When the brake pedal is released, the ground circuit is closed, energizing the solenoid.

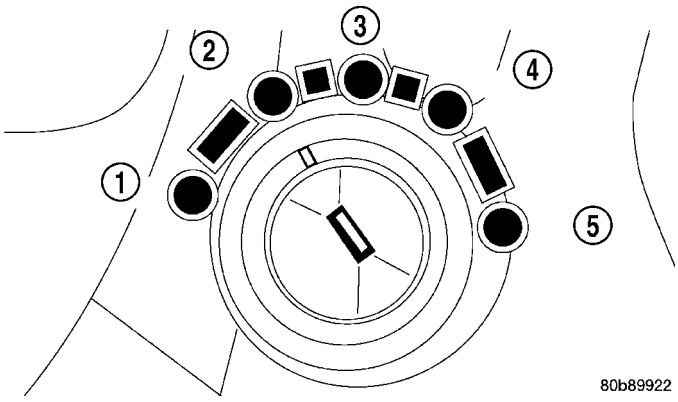

Fig. 269 Ignition Key/Switch Positions

1 - ACC
2 - LOCK
3 - OFF
4 - ON/RUN
5 - START

When the ignition key is in either the OFF, ON/RUN, or START positions, the BTSI solenoid is energized, and the solenoid plunger hook pulls the shift lever pawl into position, prohibiting the shift lever from moving out of PARK (P) (Fig. 270). When the brake pedal is depressed, the ground circuit opens, de-energizing the solenoid. This moves the gearshift lever pawl out of the way (Fig. 271), allowing the shift lever to be moved into any gear position.

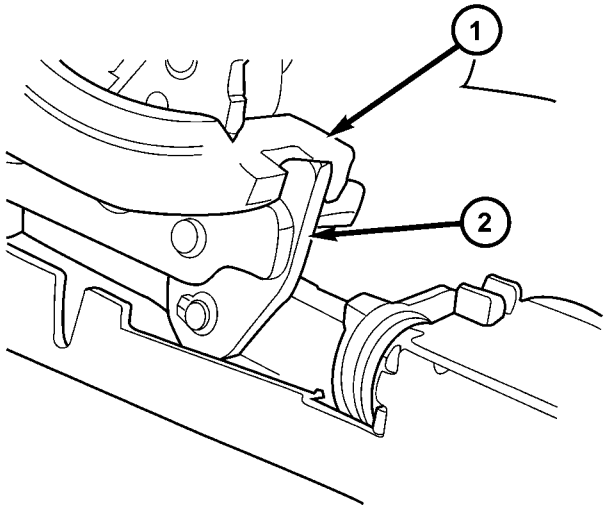

Fig. 270 Pawl Engaged to Shift Lever

1 - GEAR SHIFT LEVER
2 - GEAR SHIFT LEVER PAWL

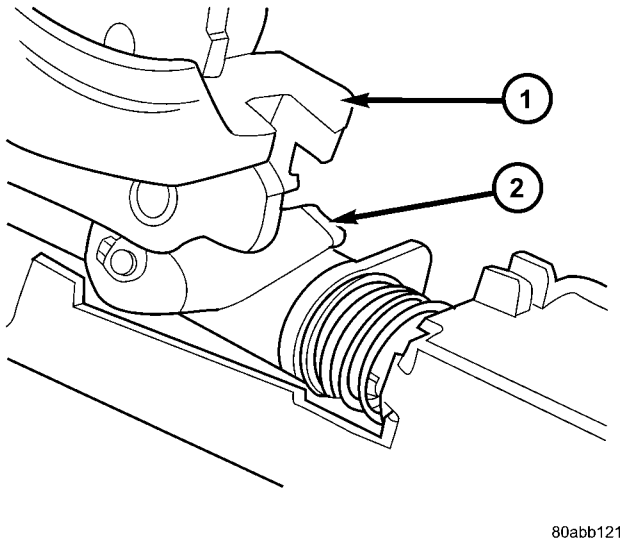

Fig. 271 Pawl Disengaged From Shift Lever

1 - GEAR SHIFT LEVER
2 - GEAR SHIFT LEVER PAWL

SHIFT INTERLOCK SOLENOID (Continued)

A conventional mechanical interlock system is also used. This system manually prohibits shifter movement when the ignition switch is in the LOCK or ACC positions. Solenoid operation is not required in these key positions.

For intended BTSI system operation, refer to the following chart:

ACTION	EXPECTED RESPONSE
1. Turn key to the ″OFF″ position.	1. Shifter CAN be shifted out of park with brake pedal applied.
2. Turn key to the ″ON/RUN″ position.	2. Shifter CANNOT be shifted out of park.
3. Turn key to the ″ON/RUN″ position and depress the brake pedal.	3. Shifter CAN be shifted out of park.
4. Leave shifter in any gear and try to return key to the ″LOCK″ or ″ACC″ position.	4. Key cannot be returned to the ″LOCK″ or ″ACC″ position.
5. Return shifter to ″PARK″ and try to remove the key.	5. Key can be removed (after returning to ″LOCK″ position).
6. With the key removed, try to shift out of ″PARK″.	6. Shifter cannot be shifted out of ″PARK″.
NOTE: Any failure to meet these expected responses requires system adjustment or repair.	

DIAGNOSIS AND TESTING - BRAKE/ TRANSMISSION SHIFT INTERLOCK SOLENOID

For intended BTSI system operation, refer to the following chart:

ACTION	EXPECTED RESPONSE
1. Turn key to the ″OFF″ position.	1. Shifter CAN be shifted out of park with brake pedal applied.
2. Turn key to the ″ON/RUN″ position.	2. Shifter CANNOT be shifted out of park.
3. Turn key to the ″ON/RUN″ position and depress the brake pedal.	3. Shifter CAN be shifted out of park.
4. Leave shifter in any gear and try to return key to the ″LOCK″ or ″ACC″ position.	4. Key cannot be returned to the ″LOCK″ or ″ACC″ position.
5. Return shifter to ″PARK″ and try to remove the key.	5. Key can be removed (after returning to ″LOCK″ position).
6. With the key removed, try to shift out of ″PARK″.	6. Shifter cannot be shifted out of ″PARK″.
NOTE: Any failure to meet these expected responses requires system repair. Refer to the appropriate Diagnostic Information.	

REMOVAL

(1) Disconnect battery negative cable.

(2) Remove instrument panel lower shroud (Fig. 272).

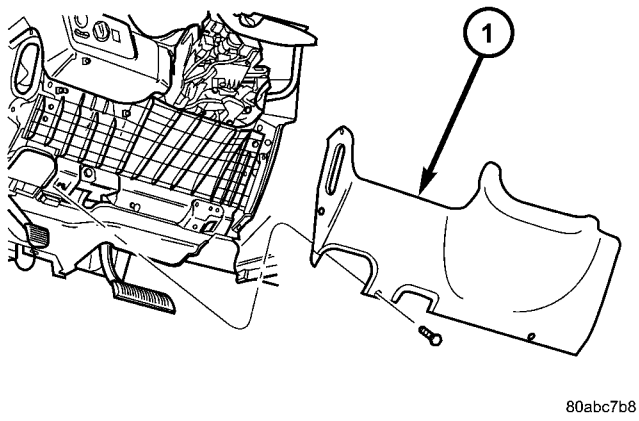

Fig. 272 Instrument Panel Lower Silencer

1 - INSTRUMENT PANEL LOWER SILENCER

(3) Remove knee bolster (Fig. 273).

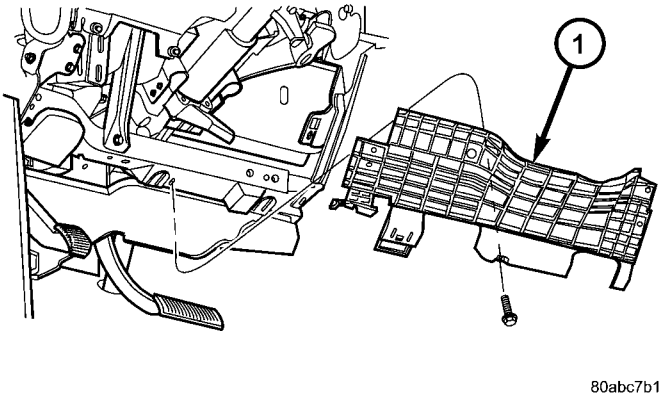

Fig. 273 Knee Bolster

1 - KNEE BOLSTER

SHIFT INTERLOCK SOLENOID (Continued)

(4) Remove steering column lower shroud.
(5) Disconnect brake/transmission shift interlock (BTSI) solenoid connector (Fig. 274).

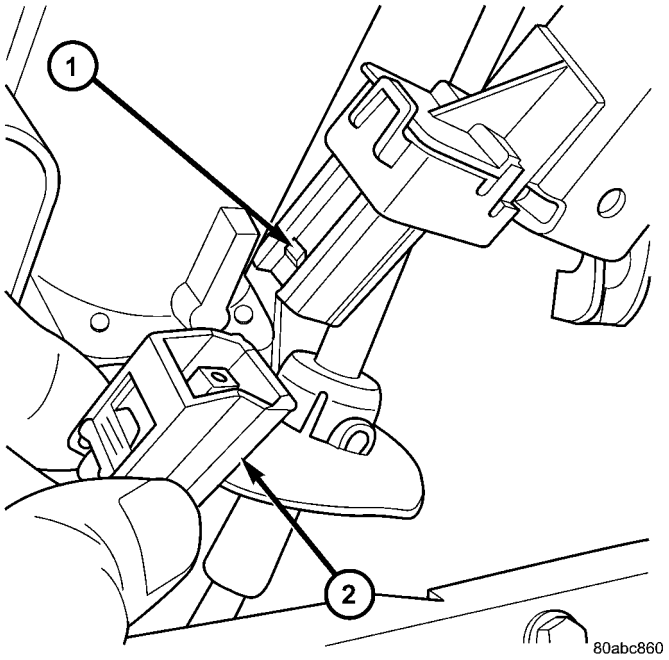

Fig. 274 BTSI Solenoid Connector

1 - BTSI SOLENOID
2 - SOLENOID CONNECTOR

(6) Remove two (2) solenoid-to-column screws (Fig. 275).

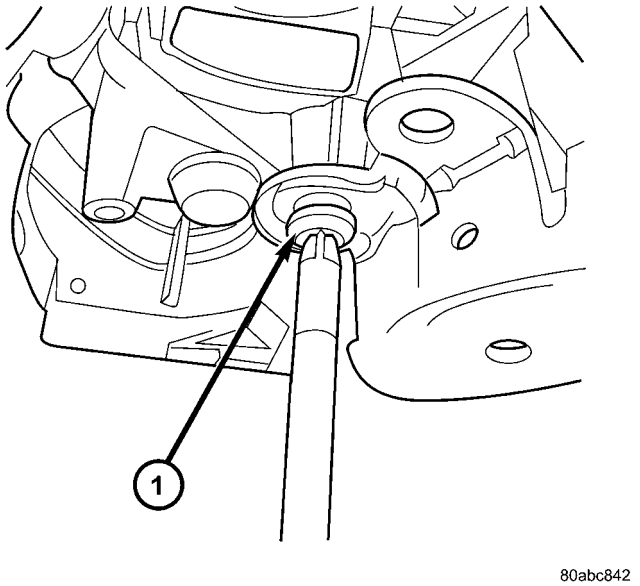

Fig. 275 Solenoid Retaining Screw

1 - SOLENOID RETAINING SCREW (2)

(7) Remove solenoid.

INSTALLATION

(1) Place interlock solenoid into position ensuring hook on end of solenoid plunger engages gearshift lever pawl pin. Install and tighten screws (Fig. 276).

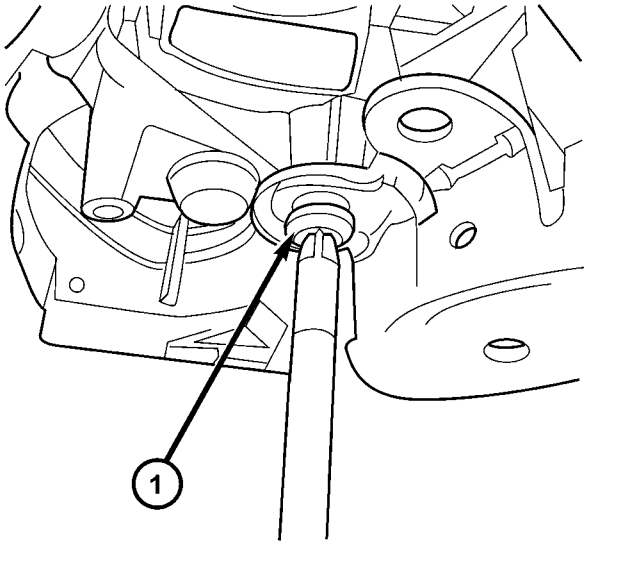

Fig. 276 Solenoid Retaining Screw

1 - SOLENOID RETAINING SCREW (2)

(2) Verify gearshift lever is in PARK (P) and connect solenoid connector (Fig. 277).

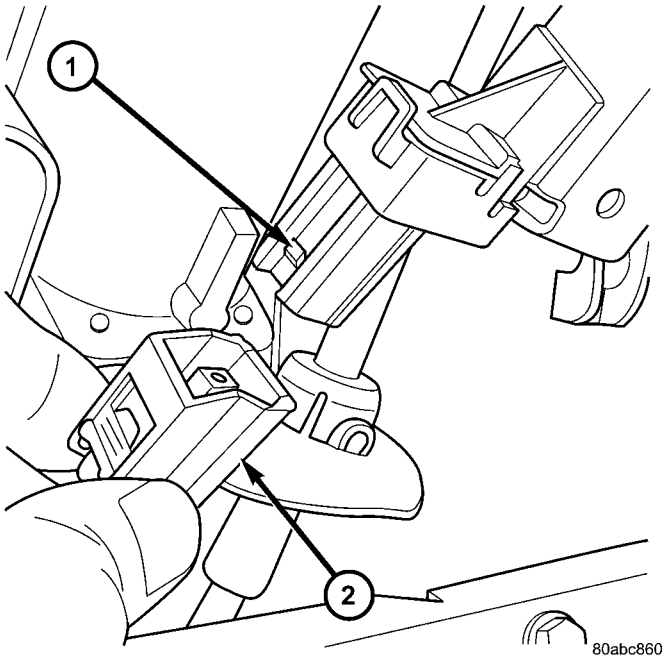

Fig. 277 BTSI Solenoid Connector

1 - BTSI SOLENOID
2 - SOLENOID CONNECTOR

SHIFT INTERLOCK SOLENOID (Continued)

(3) Install steering column lower shroud.
(4) Install knee bolster (Fig. 278).

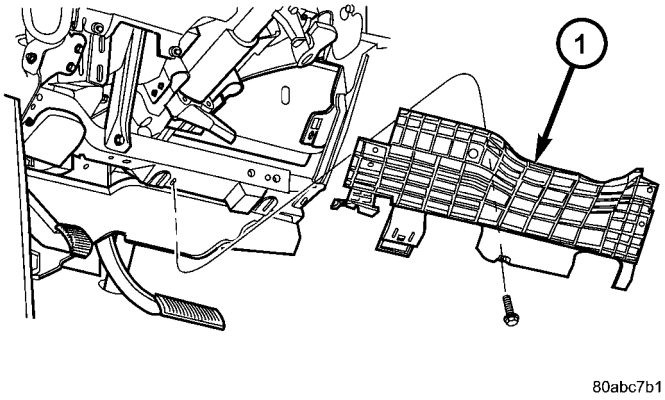

Fig. 278 Knee Bolster

1 - KNEE BOLSTER

(5) Install instrument panel lower silencer (Fig. 279).

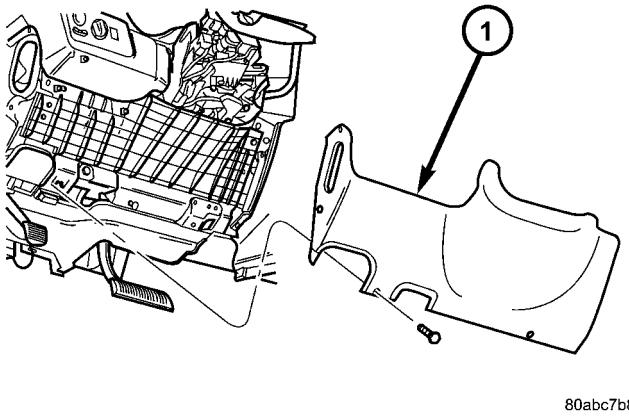

Fig. 279 Instrument Panel Lower Silencer

1 - INSTRUMENT PANEL LOWER SILENCER

(6) Connect battery negative cable.
(7) Verify proper shift interlock system operation. (Refer to 21 - TRANSMISSION/TRANSAXLE/AUTOMATIC - 31TH/SHIFT INTERLOCK SOLENOID - OPERATION)

SOLENOID/PRESSURE SWITCH ASSY

DESCRIPTION

The Solenoid/Pressure Switch Assembly (Fig. 280) is external to the transaxle and mounted to the transaxle case. The assembly consists of four solenoids that control hydraulic pressure to the LR/CC, 2/4, OD, and UD friction elements. The reverse clutch is controlled by line pressure from the manual valve in the valve body. The solenoids are contained within the Solenoid/Pressure Switch Assembly, and can only be serviced by replacing the assembly.

The solenoid assembly also contains pressure switches that monitor and send hydraulic circuit information to the PCM/TCM. Likewise, the pressure switches can only be service by replacing the assembly.

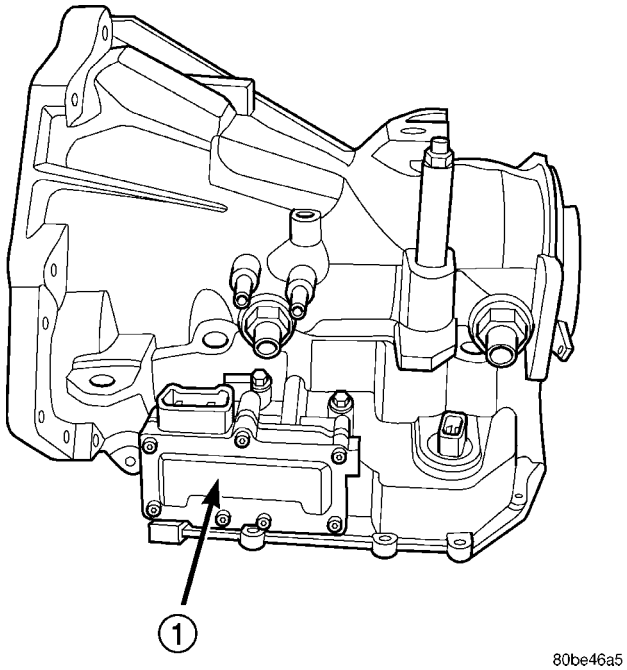

Fig. 280 Solenoid/Pressure Switch Assembly

1 - SOLENOID AND PRESSURE SWITCH ASSEMBLY

SOLENOID/PRESSURE SWITCH ASSY (Continued)

OPERATION

SOLENOIDS

The solenoids receive electrical power from the Transmission Control Relay through a single wire. The PCM/TCM energizes or operates the solenoids individually by grounding the return wire of the solenoid needed. When a solenoid is energized, the solenoid valve shifts, and a fluid passage is opened or closed (vented or applied), depending on its default operating state. The result is an apply or release of a frictional element.

The 2/4 and UD solenoids are normally applied, which by design allow fluid to pass through in their relaxed or "off" state. This allows transaxle limp-in (P,R,N,2) in the event of an electrical failure.

The continuity of the solenoids and circuits are periodically tested. Each solenoid is turned on or off depending on its current state. An inductive spike should be detected by the PCM/TCM during this test. It no spike is detected, the circuit is tested again to verify the failure. In addition to the periodic testing, the solenoid circuits are tested if a speed ratio or pressure switch error occurs.

PRESSURE SWITCHES

The PCM/TCM relies on three pressure switches to monitor fluid pressure in the L/R, 2/4, and OD hydraulic circuits. The primary purpose of these switches is to help the PCM/TCM detect when clutch circuit hydraulic failures occur. The range for the pressure switch closing and opening points is 11-23 psi. Typically the switch opening point will be approximately one psi lower than the closing point. For example, a switch may close at 18 psi and open at 17 psi. The switches are continuously monitored by the PCM/TCM for the correct states (open or closed) in each gear as shown in the following chart:

PRESSURE SWITCH STATES

GEAR	L/R	2/4	OD
R	OP	OP	OP
P/N	CL	OP	OP
1st	CL	OP	OP
2nd	OP	CL	OP
D	OP	OP	CL
OD	OP	CL	CL

OP = OPEN

CL = CLOSED

A Diagnostic Trouble Code (DTC) will set if the PCM/TCM senses any switch open or closed at the wrong time in a given gear.

The PCM/TCM also tests the 2/4 and OD pressure switches when they are normally off (OD and 2/4 are tested in 1st gear, OD in 2nd gear, and 2/4 in 3rd gear). The test simply verifies that they are operational, by looking for a closed state when the corresponding element is applied. Immediately after a shift into 1st, 2nd, or 3rd gear with the engine speed above 1000 rpm, the PCM/TCM momentarily turns on element pressure to the 2/4 and/or OD clutch circuits to identify that the appropriate switch has closed. If it doesn't close, it is tested again. If the switch fails to close the second time, the appropriate Diagnostic Trouble Code (DTC) will set.

REMOVAL

NOTE: If solenoid/pressure switch assembly is being replaced, the "Quick-Learn" procedure must be performed. (Refer to 8 - ELECTRICAL/ELECTRONIC CONTROL MODULES/TRANSMISSION CONTROL MODULE - STANDARD PROCEDURE)

(1) Disconnect battery negative cable.
(2) Remove air cleaner assembly.
(3) Disconnect solenoid/pressure switch assembly connector (Fig. 281).
(4) Disconnect input speed sensor connector (Fig. 281).

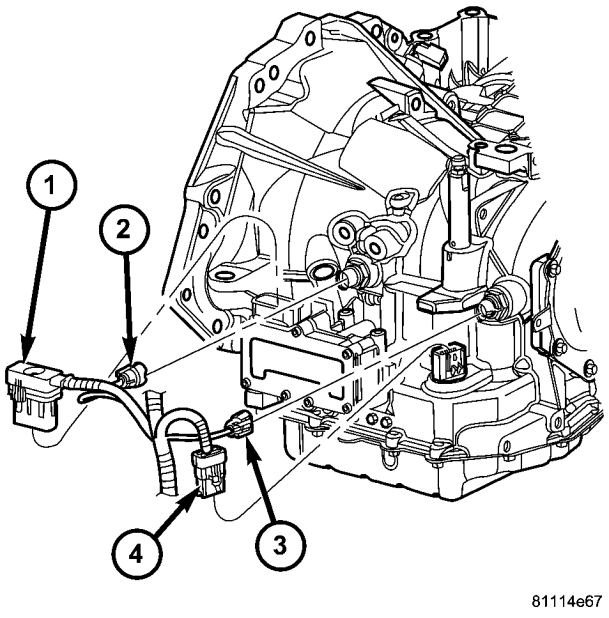

Fig. 281 Transmission Connectors

1 - SOLENOID PACK CONNECTOR
2 - INPUT SPEED SENSOR CONNECTOR
3 - OUTPUT SPEED SENSOR CONNECTOR
4 - TRANSMISSION RANGE SENSOR CONNECTOR

SOLENOID/PRESSURE SWITCH ASSY (Continued)

(5) Remove input speed sensor (Fig. 282).

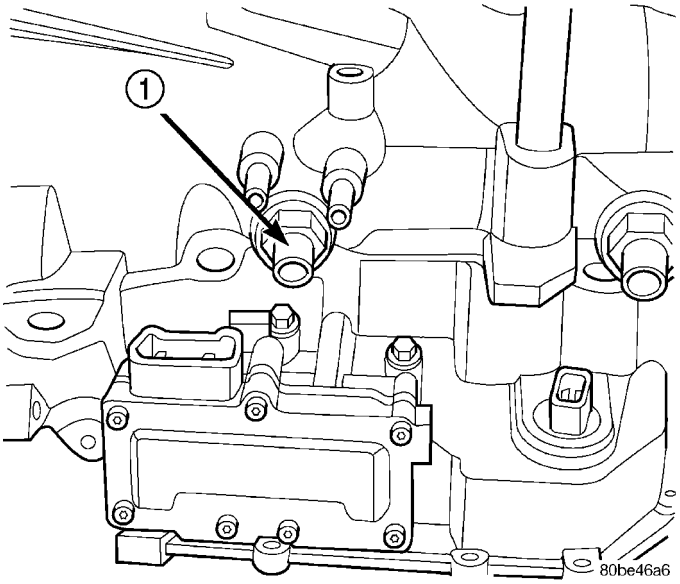

Fig. 282 Input Speed Sensor

1 - INPUT SPEED SENSOR

(6) Remove three (3) solenoid/pressure switch assembly-to-transaxle case bolts (Fig. 283).

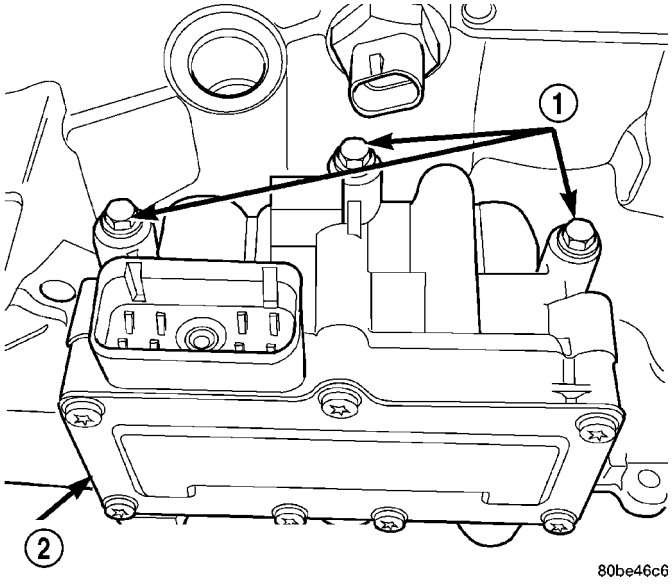

Fig. 283 Solenoid/Pressure Switch Assembly-to-Case Bolts

1 - BOLTS
2 - SOLENOID AND PRESSURE SWITCH ASSEMBLY

(7) Remove solenoid/pressure switch assembly and gasket (Fig. 284). Use care to prevent gasket material and foreign objects from become lodged in the transaxle case ports.

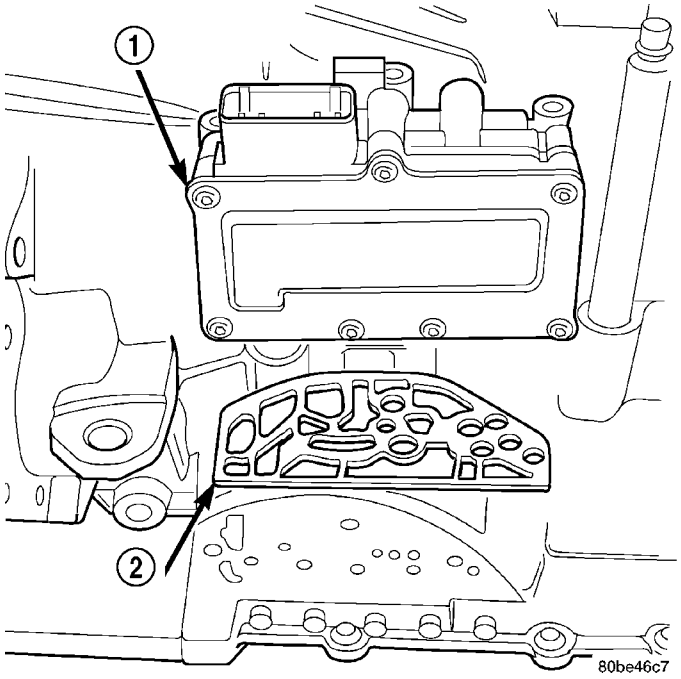

Fig. 284 Solenoid/Pressure Switch Assembly and Gasket

1 - SOLENOID/PRESSURE SWITCH ASSEMBLY
2 - GASKET

INSTALLATION

NOTE: If solenoid/pressure switch assembly is being replaced, it is necessary to perform the "Quick-Learn" procedure. (Refer to 8 - ELECTRICAL/ELECTRONIC CONTROL MODULES/TRANSMISSION CONTROL MODULE - STANDARD PROCEDURE)

(1) Install solenoid/pressure switch assembly and new gasket to transaxle (Fig. 284).

(2) Install and torque three (3) bolts (Fig. 283) to 13 N·m (110 in. lbs.).

(3) Install input speed sensor (Fig. 282) and torque to 27 N·m (20 ft. lbs.).

(4) Connect input speed sensor connector (Fig. 281).

(5) Install solenoid/pressure switch 8-way connector and torque to 4 N·m (35 in. lbs.) (Fig. 281).

(6) Install air cleaner assembly.

(7) Connect battery negative cable.

(8) If solenoid/pressure switch assembly was replaced, perform the "Quick-Learn" procedure. (Refer to 8 - ELECTRICAL/ELECTRONIC CONTROL MODULES/TRANSMISSION CONTROL MODULE - STANDARD PROCEDURE)

SPEED SENSOR - INPUT

DESCRIPTION

The Input Speed Sensor is a two-wire magnetic pickup device that generates AC signals as rotation occurs. It is threaded into the transaxle case (Fig. 285), sealed with an o-ring (Fig. 286), and is considered a primary input to the Powertrain/Transmission Control Module.

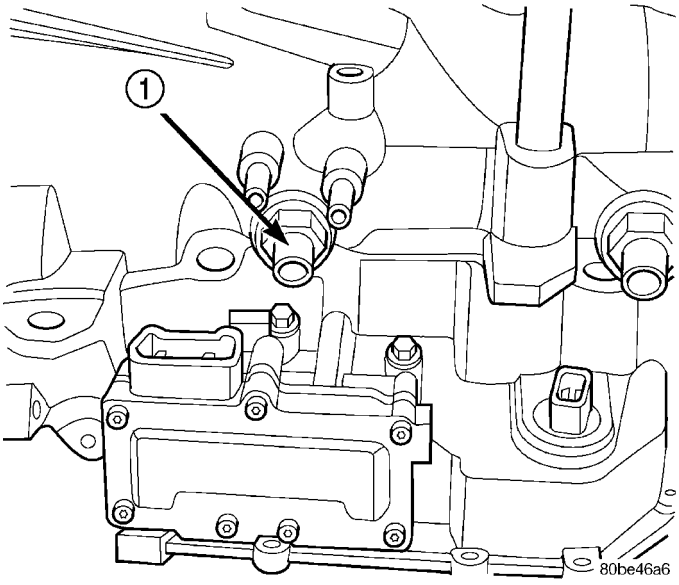

Fig. 285 Input Speed Sensor Location

1 - INPUT SPEED SENSOR

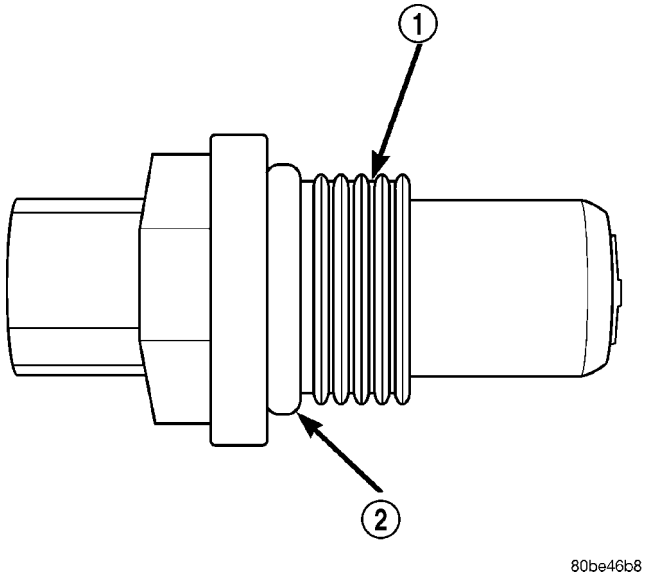

Fig. 286 O-Ring Location

1 - INPUT SPEED SENSOR
2 - O-RING

OPERATION

The Input Speed Sensor provides information on how fast the input shaft is rotating. As the teeth of the input clutch hub pass by the sensor coil (Fig. 287), an AC voltage is generated and sent to the PCM/TCM. The PCM/TCM interprets this information as input shaft rpm.

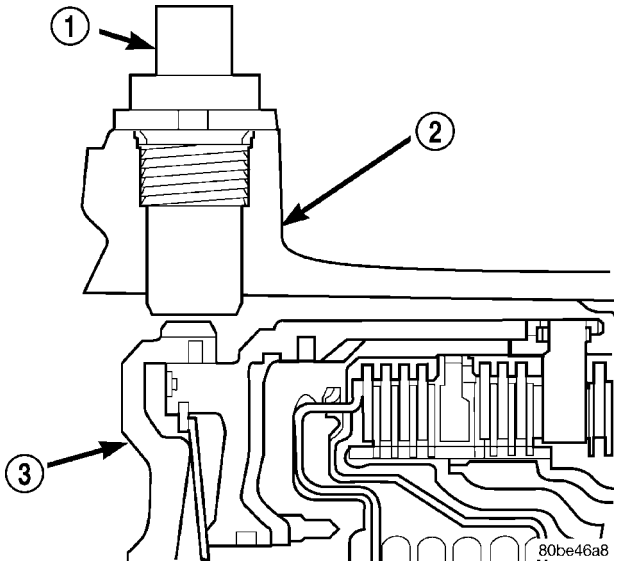

Fig. 287 Sensor Relation to Input Clutch Hub

1 - INPUT SPEED SENSOR
2 - TRANSAXLE CASE
3 - INPUT CLUTCH HUB

The PCM/TCM compares the input speed signal with output speed signal to determine the following:

- Transmission gear ratio
- Speed ratio error detection
- CVI calculation

The PCM/TCM also compares the input speed signal and the engine speed signal to determine the following:

- Torque converter clutch slippage
- Torque converter element speed ratio

SPEED SENSOR - INPUT (Continued)

REMOVAL

(1) Disconnect battery negative cable.

(2) Disconnect input speed sensor connector (Fig. 288).

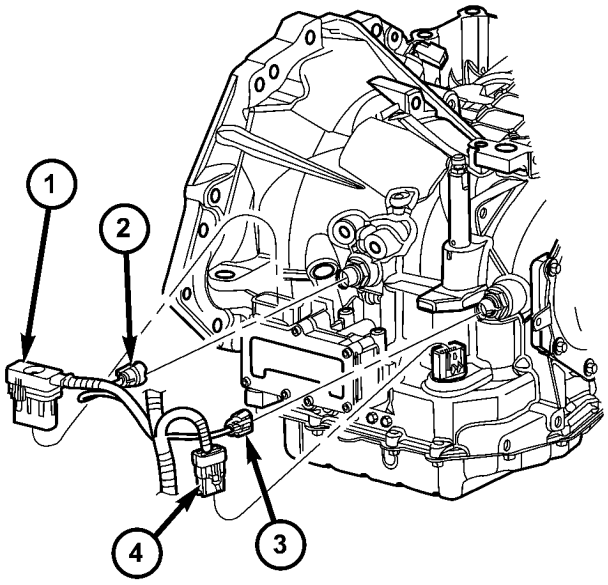

Fig. 288 Transmission Connectors

1 - SOLENOID PACK CONNECTOR
2 - INPUT SPEED SENSOR CONNECTOR
3 - OUTPUT SPEED SENSOR CONNECTOR
4 - TRANSMISSION RANGE SENSOR CONNECTOR

(3) Unscrew and remove input speed sensor (Fig. 289).

(4) Inspect speed sensor o-ring (Fig. 290) and replace if necessary.

INSTALLATION

(1) Verify o-ring is installed into position (Fig. 290).

(2) Install and tighten input speed sensor to 27 N·m (20 ft. lbs.) (Fig. 289).

(3) Connect speed sensor connector (Fig. 288).

(4) Connect battery negative cable.

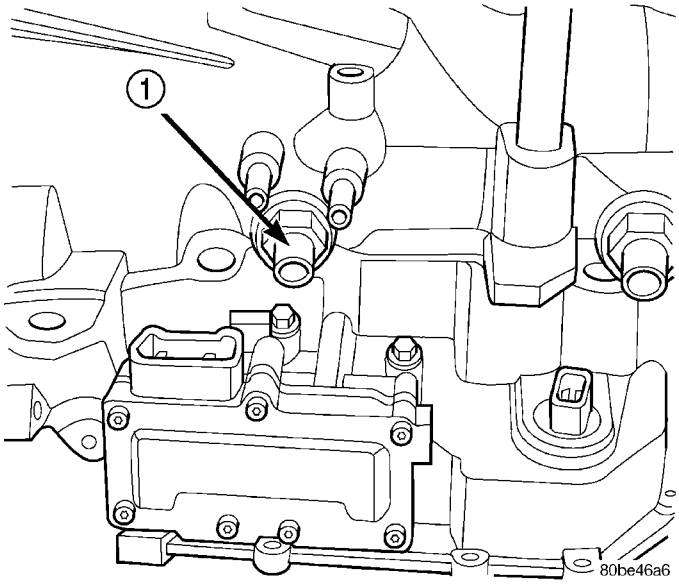

Fig. 289 Input (Turbine) Speed Sensor

1 - INPUT SPEED SENSOR

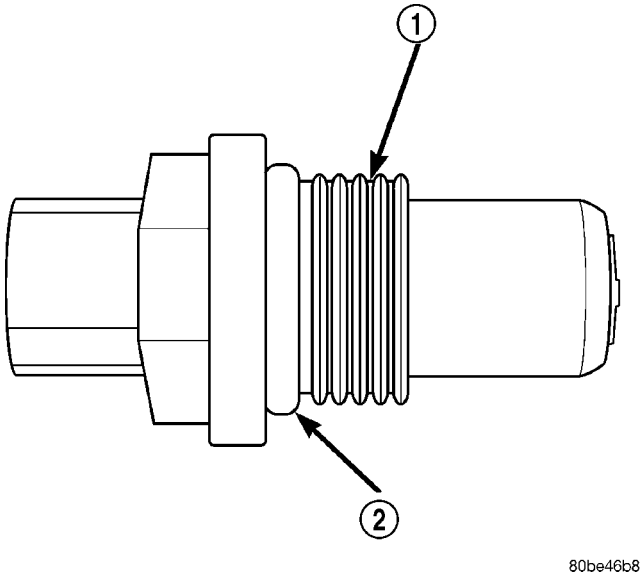

Fig. 290 O-ring Location

1 - INPUT SPEED SENSOR
2 - O-RING

SPEED SENSOR - OUTPUT

DESCRIPTION

The Output Speed Sensor is a two-wire magnetic pickup device that generates an AC signal as rotation occurs. It is threaded into the transaxle case (Fig. 291), sealed with an o-ring (Fig. 292), and is considered a primary input to the Powetrain/Transmission Control Module.

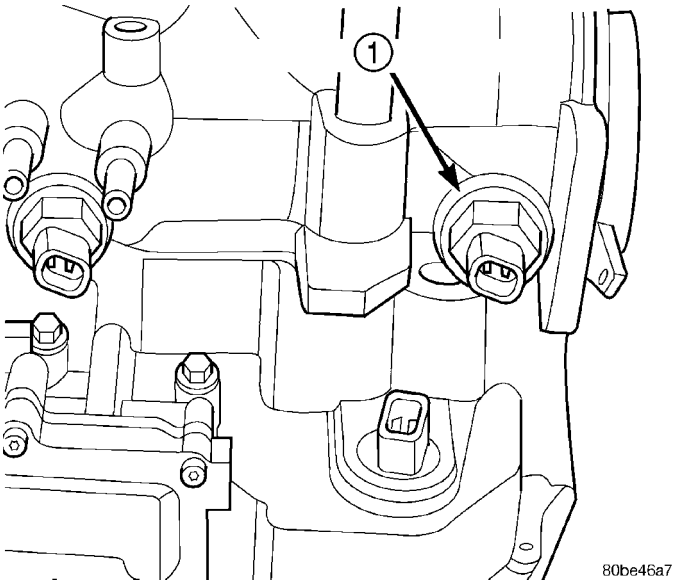

Fig. 291 Output Speed Sensor

1 - OUTPUT SPEED SENSOR

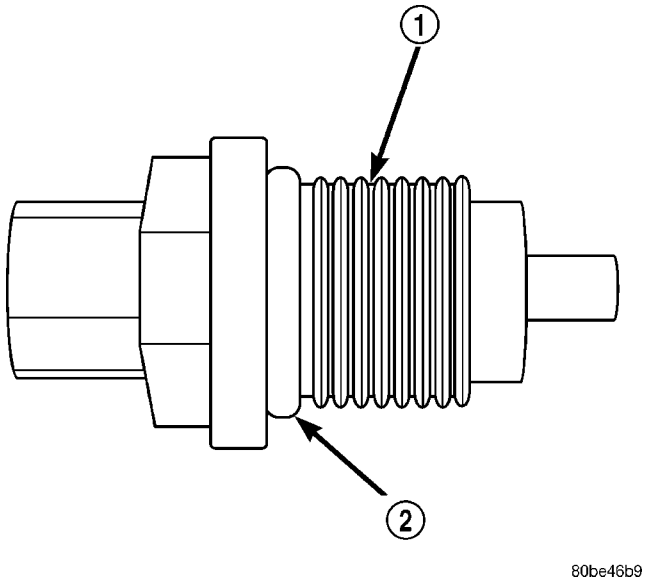

Fig. 292 O-Ring Location

1 - OUTPUT SPEED SENSOR
2 - O-RING

OPERATION

The Output Speed Sensor provides information on how fast the output shaft is rotating. As the rear planetary carrier park pawl lugs pass by the sensor coil (Fig. 293), an AC voltage is generated and sent to the PCM/TCM. The PCM/TCM interprets this information as output shaft rpm.

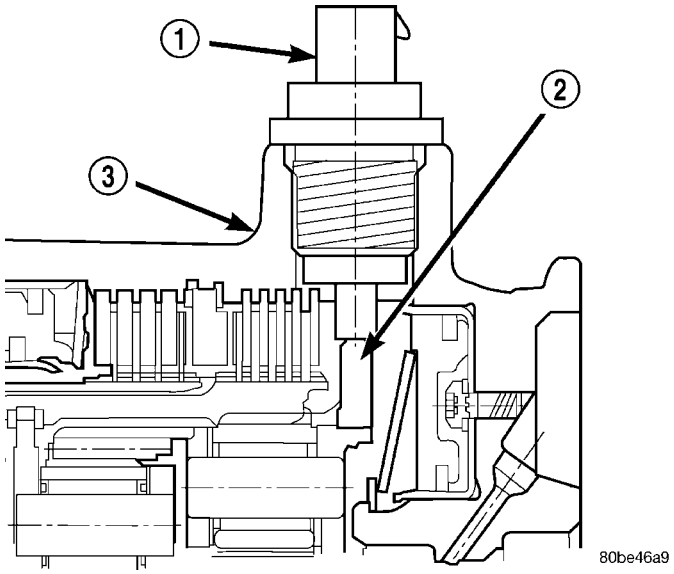

Fig. 293 Sensor Relation to Planet Carrier Park Pawl

1 - OUTPUT SPEED SENSOR
2 - REAR PLANET CARRIER/OUTPUT SHAFT ASSEMBLY
3 - TRANSAXLE CASE

The PCM/TCM compares the input and output speed signals to determine the following:

- Transmission gear ratio
- Speed ratio error detection
- CVI calculation

SPEED SENSOR - OUTPUT (Continued)

VEHICLE SPEED SIGNAL

The vehicle speed signal is taken from the Output Speed Sensor. The PCM converts this signal into a pulse per mile signal and sends the vehicle speed message across the communication bus to the BCM. The BCM sends this signal to the Instrument Cluster to display vehicle speed to the driver. The vehicle speed signal pulse is roughly 8000 pulses per mile.

REMOVAL

(1) Disconnect battery negative cable.
(2) Raise vehicle on hoist.
(3) Disconnect output speed sensor connector (Fig. 294).

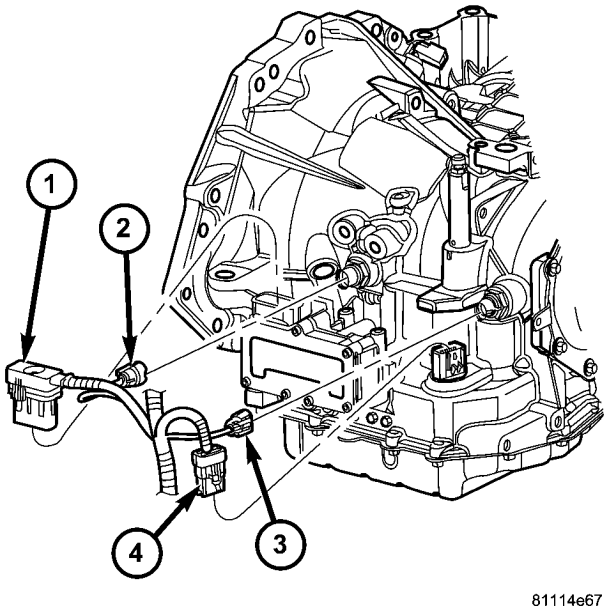

Fig. 294 Transmission Connectors

1 - SOLENOID PACK CONNECTOR
2 - INPUT SPEED SENSOR CONNECTOR
3 - OUTPUT SPEED SENSOR CONNECTOR
4 - TRANSMISSION RANGE SENSOR CONNECTOR

(4) Unscrew and remove output speed sensor (Fig. 295).
(5) Inspect speed sensor o-ring (Fig. 296) and replace if necessary.

INSTALLATION

(1) Verify o-ring is installed into position (Fig. 296).
(2) Install and tighten input speed sensor to 27 N·m (20 ft. lbs.).
(3) Connect speed sensor connector (Fig. 294).
(4) Connect battery negative cable.

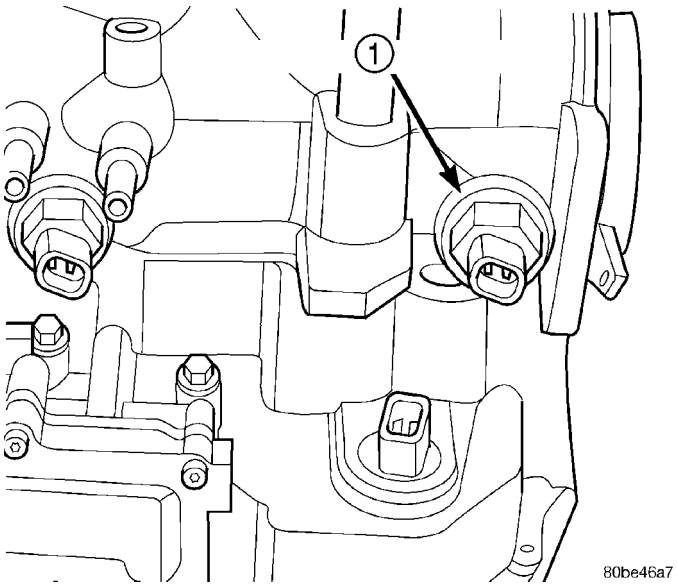

Fig. 295 Output Speed Sensor

1 - OUTPUT SPEED SENSOR

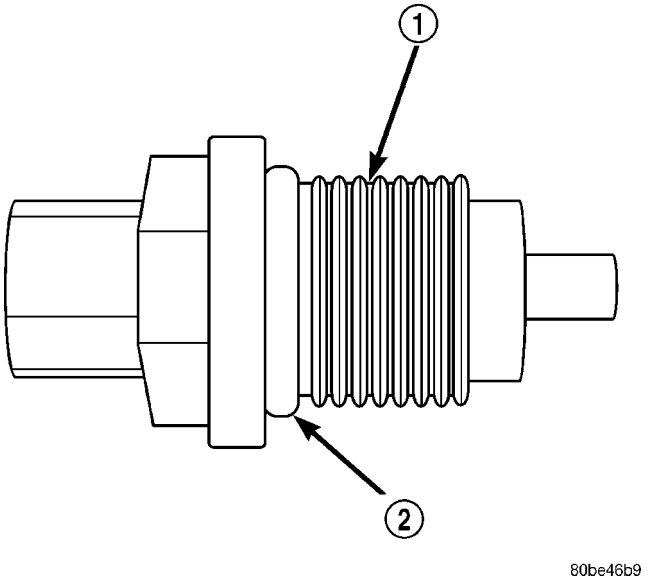

Fig. 296 O-ring Location

1 - OUTPUT SPEED SENSOR
2 - O-RING

TORQUE CONVERTER

DESCRIPTION

The torque converter (Fig. 297) is a hydraulic device that couples the engine crankshaft to the transmission. The torque converter consists of an outer shell with an internal turbine, a stator, an overrunning clutch, an impeller and an electronically applied converter clutch. The converter clutch provides reduced engine speed and greater fuel economy when engaged. Clutch engagement also provides reduced transmission fluid temperatures. The converter clutch engages in third gear. The torque converter hub drives the transmission oil (fluid) pump.

The torque converter is a sealed, welded unit that is not repairable and is serviced as an assembly.

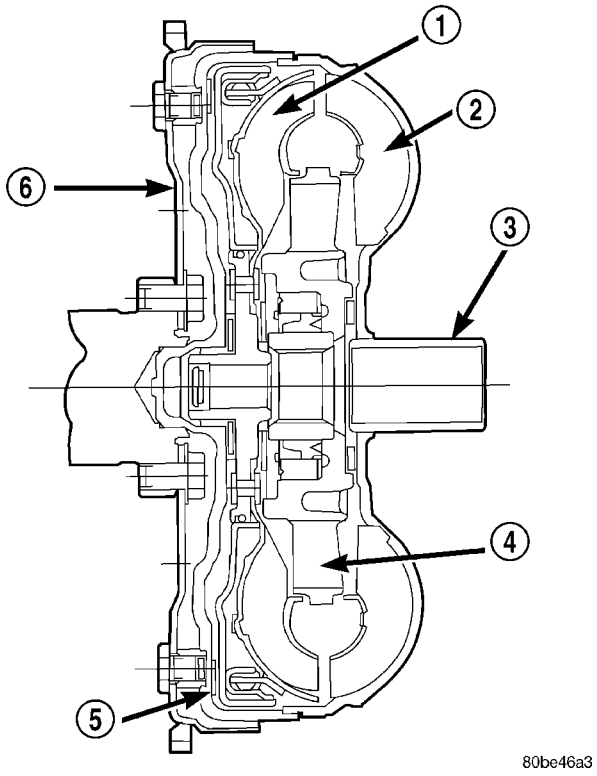

Fig. 297 Torque Converter Assembly

1 - TURBINE
2 - IMPELLER
3 - HUB
4 - STATOR
5 - CONVERTER CLUTCH DISC
6 - DRIVE PLATE

TORQUE CONVERTER (Continued)

IMPELLER

The impeller (Fig. 298) is an integral part of the converter housing. The impeller consists of curved blades placed radially along the inside of the housing on the transmission side of the converter. As the converter housing is rotated by the engine, so is the impeller, because they are one and the same and are the driving member of the system.

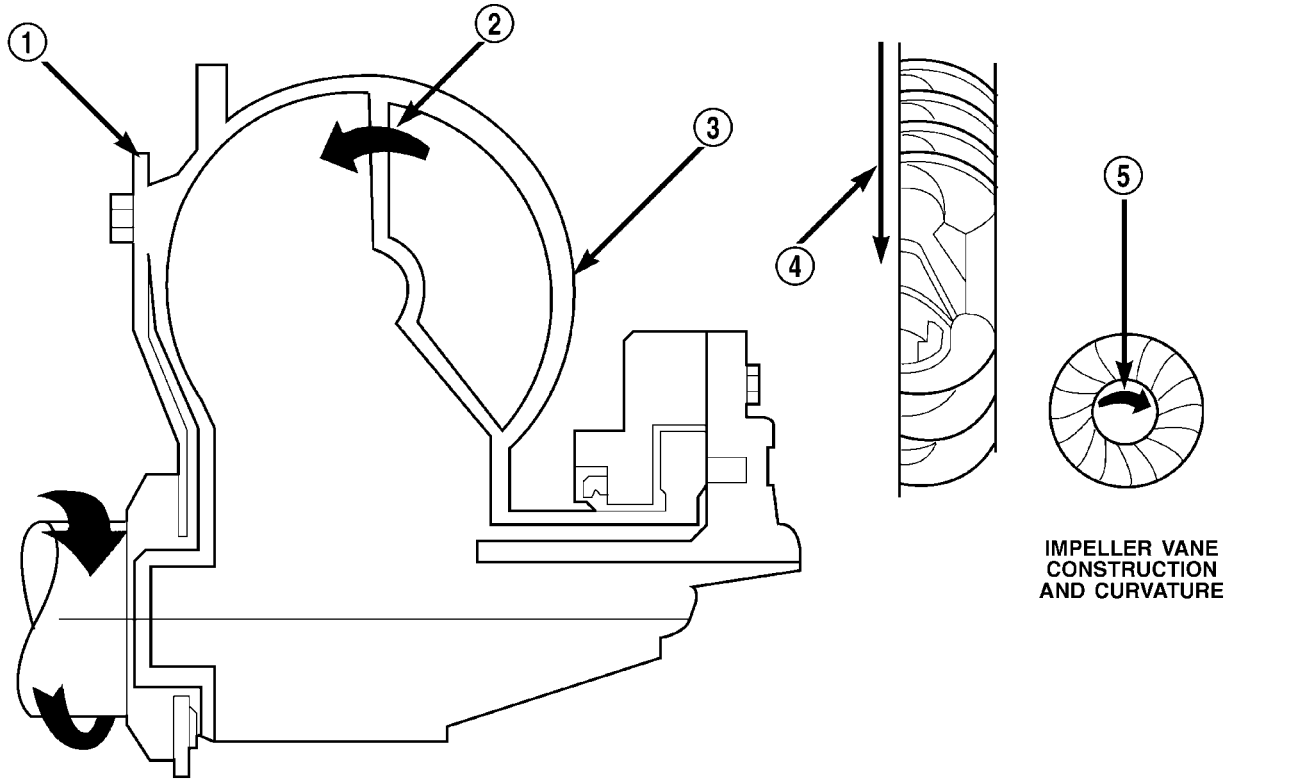

Fig. 298 Impeller

1 - ENGINE FLEXPLATE
2 - OIL FLOW FROM IMPELLER SECTION INTO TURBINE SECTION
3 - IMPELLER VANES AND COVER ARE INTEGRAL
4 - ENGINE ROTATION
5 - ENGINE ROTATION

TORQUE CONVERTER (Continued)

TURBINE

The turbine (Fig. 299) is the output, or driven, member of the converter. The turbine is mounted within the housing opposite the impeller, but is not attached to the housing. The input shaft is inserted through the center of the impeller and splined into the turbine. The design of the turbine is similar to the impeller, except the blades of the turbine are curved in the opposite direction.

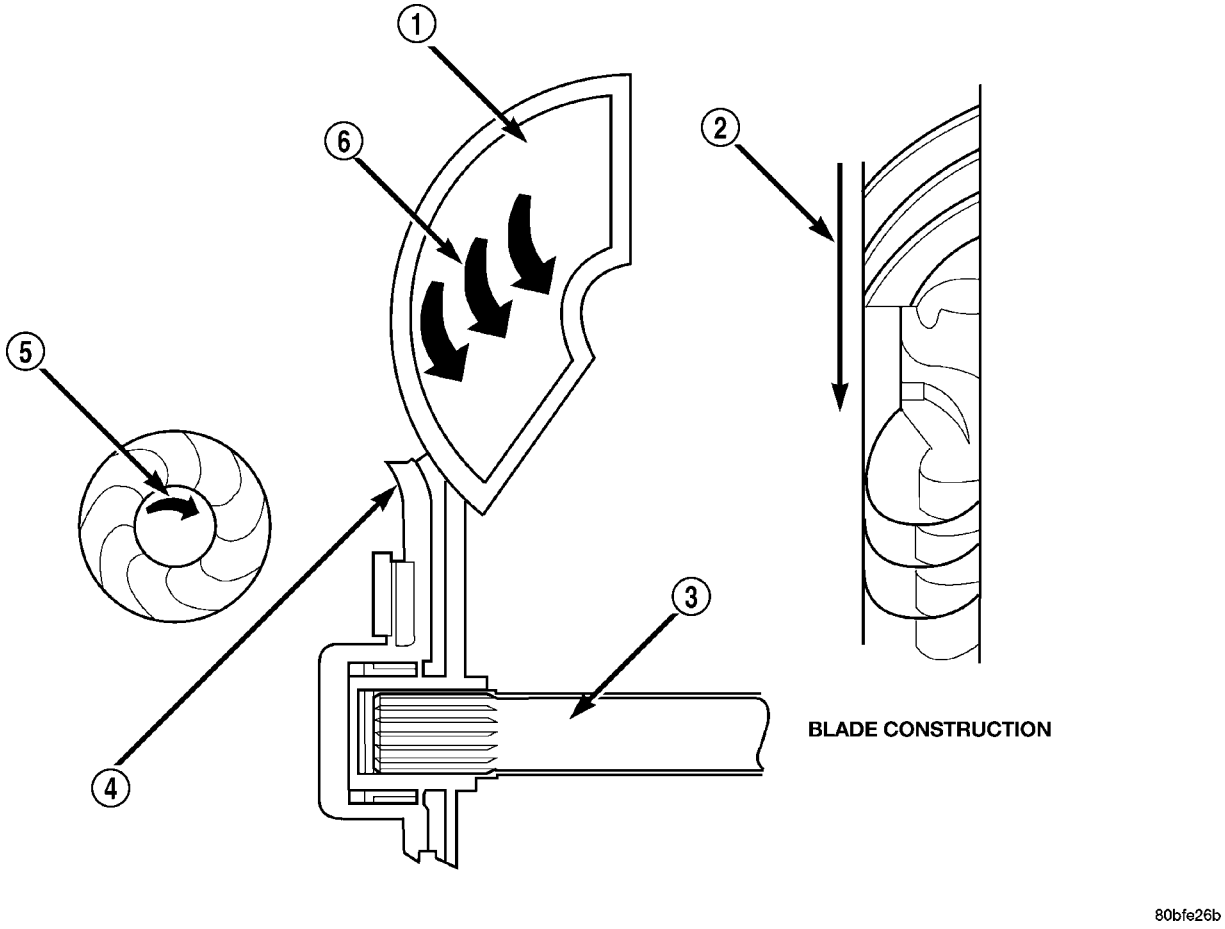

Fig. 299 Turbine

1 - TURBINE VANE
2 - ENGINE ROTATION
3 - INPUT SHAFT
4 - PORTION OF TORQUE CONVERTER COVER
5 - ENGINE ROTATION
6 - OIL FLOW WITHIN TURBINE SECTION

TORQUE CONVERTER (Continued)

STATOR

The stator assembly (Fig. 300) is mounted on a stationary shaft which is an integral part of the oil pump. The stator is located between the impeller and turbine within the torque converter case (Fig. 301). The stator contains an over-running clutch, which allows the stator to rotate only in a clockwise direction. When the stator is locked against the over-running clutch, the torque multiplication feature of the torque converter is operational.

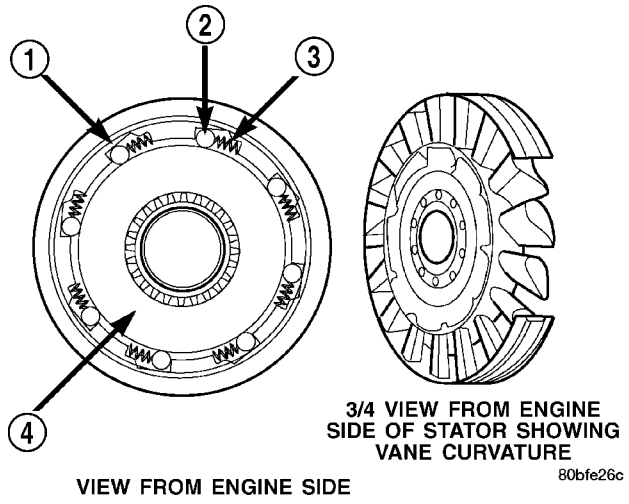

Fig. 300 Stator Components

1 - CAM (OUTER RACE)
2 - ROLLER
3 - SPRING
4 - INNER RACE

TORQUE CONVERTER CLUTCH (TCC)

The TCC (Fig. 302) was installed to improve the efficiency of the torque converter that is lost to the slippage of the fluid coupling. Although the fluid coupling provides smooth, shock–free power transfer, it is natural for all fluid couplings to slip. If the impeller and turbine were mechanically locked together, a zero slippage condition could be obtained. A hydraulic piston was added to the turbine, and a friction material was added to the inside of the front cover to provide this mechanical lock-up.

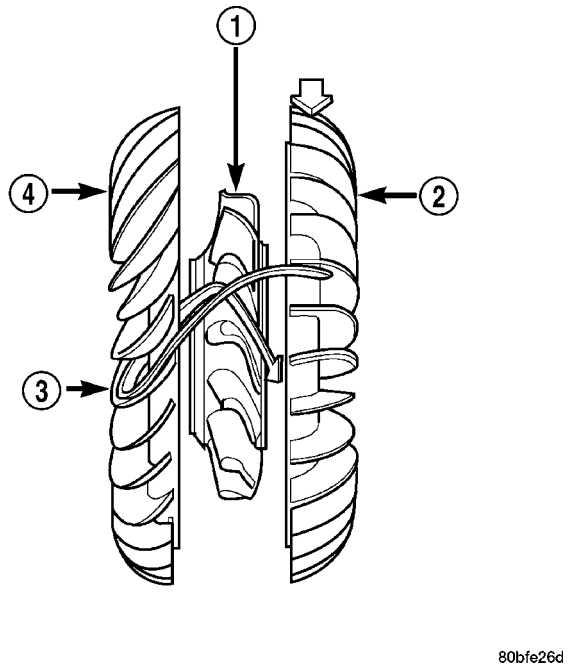

Fig. 301 Stator Location

1 - STATOR
2 - IMPELLER
3 - FLUID FLOW
4 - TURBINE

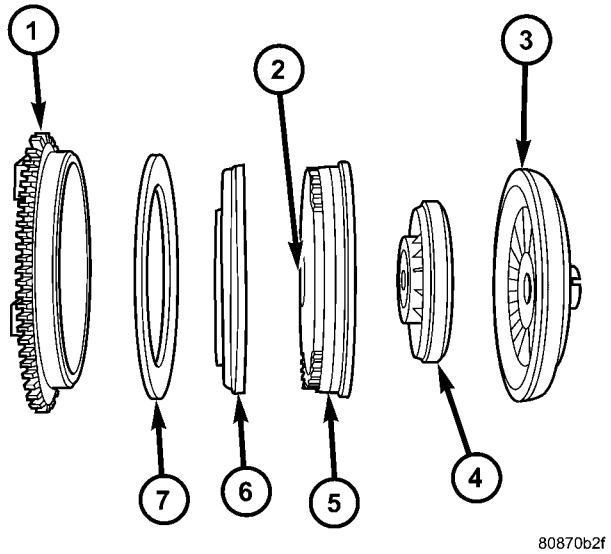

Fig. 302 Torque Converter Clutch (TCC)

1 - IMPELLER FRONT COVER
2 - THRUST WASHER ASSEMBLY
3 - IMPELLER
4 - STATOR
5 - TURBINE
6 - PISTON
7 - FRICTION DISC

TORQUE CONVERTER (Continued)

OPERATION

The converter impeller (Fig. 303) (driving member), which is integral to the converter housing and bolted to the engine drive plate, rotates at engine speed. The converter turbine (driven member), which reacts from fluid pressure generated by the impeller, rotates and turns the transmission input shaft.

TURBINE

As the fluid that was put into motion by the impeller blades strikes the blades of the turbine, some of the energy and rotational force is transferred into the turbine and the input shaft. This causes both of them (turbine and input shaft) to rotate in a clockwise direction following the impeller. As the fluid is leaving the trailing edges of the turbine's blades it continues in a "hindering" direction back toward the impeller. If the fluid is not redirected before it strikes the impeller, it will strike the impeller in such a direction that it would tend to slow it down.

STATOR

Torque multiplication is achieved by locking the stator's over-running clutch to its shaft (Fig. 304). Under stall conditions (the turbine is stationary), the oil leaving the turbine blades strikes the face of the stator blades and tries to rotate them in a counterclockwise direction. When this happens the over–running clutch of the stator locks and holds the stator from rotating. With the stator locked, the oil strikes the stator blades and is redirected into a "helping" direction before it enters the impeller. This circulation of oil from impeller to turbine, turbine to stator, and stator to impeller, can produce a maximum torque multiplication of about 2.4:1. As the turbine begins to match the speed of the impeller, the fluid that was hitting the stator in such as way as to cause it to lock–up is no longer doing so. In this condition of operation, the stator begins to free wheel and the converter acts as a fluid coupling.

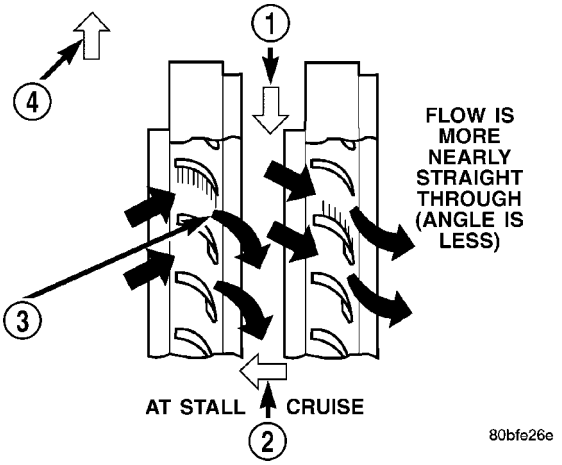

Fig. 304 Stator Operation

1 - DIRECTION STATOR WILL FREE WHEEL DUE TO OIL PUSHING ON BACKSIDE OF VANES
2 - FRONT OF ENGINE
3 - INCREASED ANGLE AS OIL STRIKES VANES
4 - DIRECTION STATOR IS LOCKED UP DUE TO OIL PUSHING AGAINST STATOR VANES

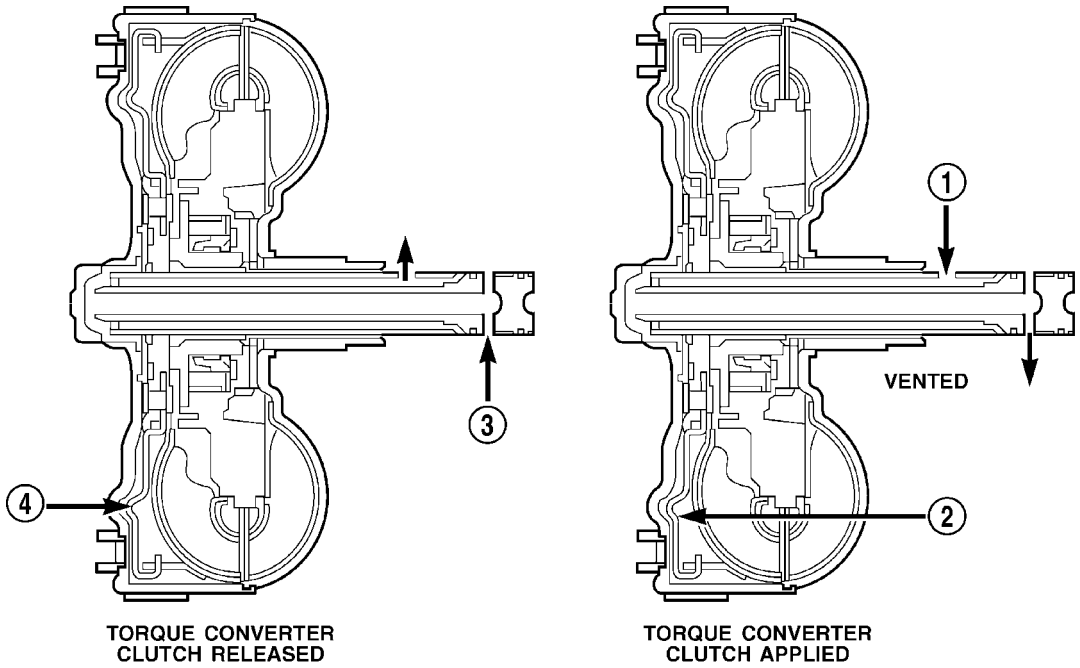

Fig. 303 Torque Converter Fluid Operation

1 - APPLY PRESSURE
2 - THE PISTON MOVES SLIGHTLY FORWARD
3 - RELEASE PRESSURE
4 - THE PISTON MOVES SLIGHTLY REARWARD

TORQUE CONVERTER (Continued)

TORQUE CONVERTER CLUTCH (TCC)

In a standard torque converter, the impeller and turbine are rotating at about the same speed and the stator is freewheeling, providing no torque multiplication. By applying the turbine's piston to the front cover's friction material, a total converter engagement can be obtained. The result of this engagement is a direct 1:1 mechanical link between the engine and the transmission.

The engagement and disengagement of the TCC are automatic and controlled by the Powertrain Control Module (PCM). The engagement cannot be activated in the lower gears because it eliminates the torque multiplication effect of the torque converter necessary for acceleration. Inputs that determine clutch engagement are: coolant temperature, vehicle speed and throttle position. The torque converter clutch is engaged by the clutch solenoid on the valve body. The clutch will engage at approximately 56 km/h (35 mph) with light throttle, after the shift to third gear.

REMOVAL

(1) Remove transmission and torque converter from vehicle. (Refer to 21 - TRANSMISSION/TRANSAXLE/AUTOMATIC - 41TE - REMOVAL)

(2) Place a suitable drain pan under the converter housing end of the transmission.

CAUTION: Verify that transmission is secure on the lifting device or work surface, the center of gravity of the transmission will shift when the torque converter is removed creating an unstable condition. The torque converter is a heavy unit. Use caution when separating the torque converter from the transmission.

(3) Pull the torque converter forward until the center hub clears the oil pump seal.

(4) Separate the torque converter from the transmission.

INSTALLATION

Check converter hub and drive notches for sharp edges, burrs, scratches, or nicks. Polish the hub and notches with 320/400 grit paper or crocus cloth if necessary. The hub must be smooth to avoid damaging the pump seal at installation.

(1) Lubricate converter hub and oil pump seal lip with transmission fluid.

(2) Place torque converter in position on transmission.

CAUTION: Do not damage oil pump seal or bushing while inserting torque converter into the front of the transmission.

(3) Align torque converter to oil pump seal opening.

(4) Insert torque converter hub into oil pump.

(5) While pushing torque converter inward, rotate converter until converter is fully seated in the oil pump gears.

(6) Check converter seating with a scale and straightedge (Fig. 305). Surface of converter lugs should be 1/2 in. to rear of straightedge when converter is fully seated.

(7) If necessary, temporarily secure converter with C-clamp attached to the converter housing.

(8) Install the transmission in the vehicle. (Refer to 21 - TRANSMISSION/TRANSAXLE/AUTOMATIC - 41TE - INSTALLATION)

(9) Fill the transmission with the recommended fluid. (Refer to 21 - TRANSMISSION/TRANSAXLE/AUTOMATIC - 41TE/FLUID - STANDARD PROCEDURE)

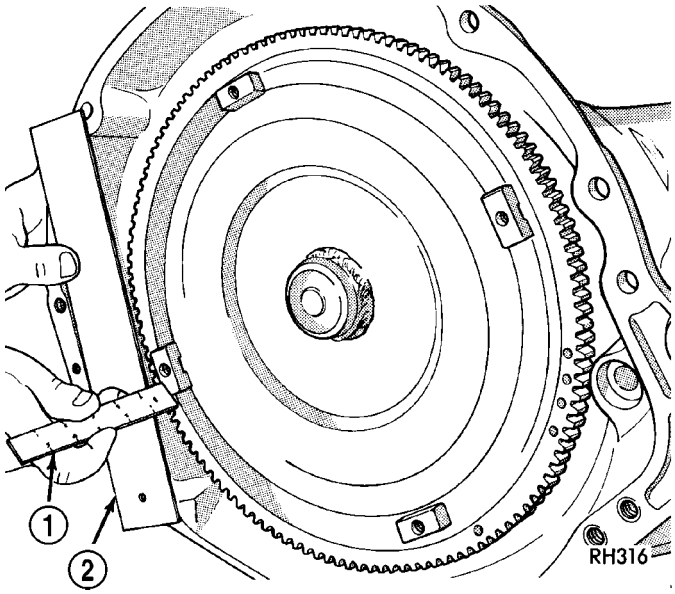

Fig. 305 Checking Torque Converter Seating

1 - SCALE
2 - STRAIGHTEDGE

TRANSMISSION CONTROL RELAY

DESCRIPTION

The transmission control relay (Fig. 306) is located in the Intelligent Power Module (IPM), which is located on the left side of the engine compartment between the battery and left fender.

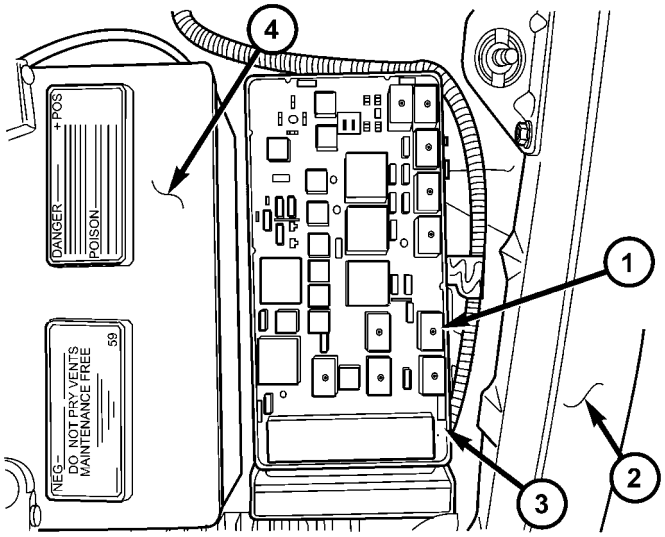

Fig. 306 Transmission Control Relay Location

1 - TRANSMISSION CONTROL RELAY
2 - LEFT FENDER
3 - INTELLIGENT POWER MODULE (IPM)
4 - BATTERY

OPERATION

The relay is supplied fused B+ voltage, energized by the PCM/TCM, and is used to supply power to the solenoid pack when the transmission is in normal operating mode. When the relay is "off", no power is supplied to the solenoid pack and the transmission is in "limp-in" mode. After a controller reset (ignition key turned to the "run" position or after cranking engine), the PCM/TCM energizes the relay. Prior to this, the PCM/TCM verifies that the contacts are open by checking for no voltage at the switched battery terminals. After this is verified, the voltage at the solenoid pack pressure switches is checked. After the relay is energized, the PCM/TCM monitors the terminals to verify that the voltage is greater than 3 volts.

TRANSMISSION RANGE SENSOR

DESCRIPTION

The Transmission Range Sensor (TRS) is mounted to the top of the valve body inside the transaxle and can only be serviced by removing the valve body. The electrical connector extends through the transaxle case (Fig. 307).

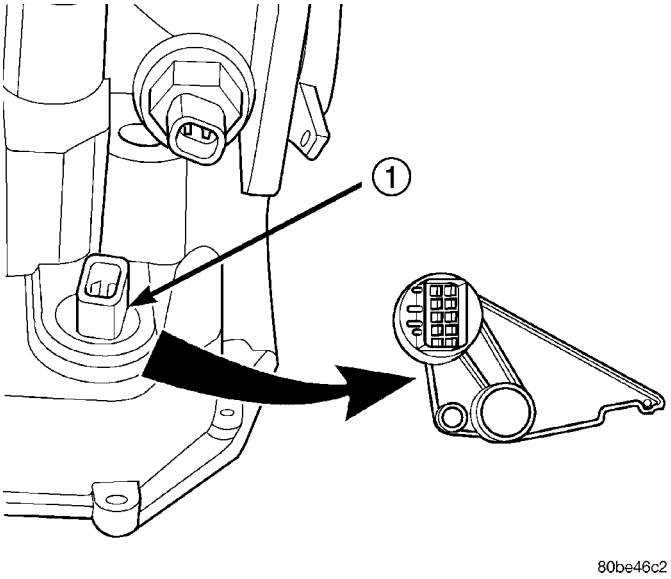

Fig. 307 Transmission Range Sensor (TRS) Location

1 - TRANSMISSION RANGE SENSOR

The Transmission Range Sensor (TRS) has four switch contacts that monitor shift lever position and send the information to the PCM/TCM.

The TRS also has an integrated temperature sensor (thermistor) that communicates transaxle temperature to the TCM and PCM (Fig. 308).

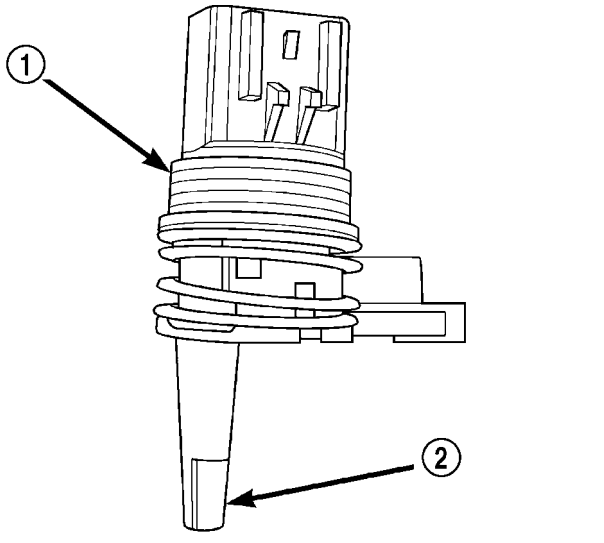

Fig. 308 Transmission Temperature Sensor

1 - TRANSMISSION RANGE SENSOR
2 - TEMPERATURE SENSOR

TRANSMISSION RANGE SENSOR (Continued)

OPERATION

The Transmission Range Sensor (TRS) (Fig. 307) communicates shift lever position (SLP) to the PCM/TCM as a combination of open and closed switches. Each shift lever position has an assigned combination of switch states (open/closed) that the PCM/TCM receives from four sense circuits. The PCM/TCM interprets this information and determines the appropriate transaxle gear position and shift schedule.

Since there are four switches, there are 16 possible combinations of open and closed switches (codes). Seven of these codes are related to gear position and three are recognized as "between gear" codes. This results in six codes which should never occur. These are called "invalid" codes. An invalid code will result in a DTC, and the PCM/TCM will then determine the shift lever position based on pressure switch data. This allows reasonably normal transmission operation with a TRS failure.

TRS SWITCH STATES

SLP	T42	T41	T3	T1
P	CL	CL	CL	OP
R	CL	OP	OP	OP
N	CL	CL	OP	CL
OD	OP	OP	OP	CL
3	OP	OP	CL	OP
L	CL	OP	CL	CL

TRANSMISSION TEMPERATURE SENSOR

The TRS has an integrated thermistor (Fig. 308) that the PCM/TCM uses to monitor the transmission's sump temperature. Since fluid temperature can affect transmission shift quality and convertor lock up, the PCM/TCM requires this information to determine which shift schedule to operate in. The PCM also monitors this temperature data so it can energize the vehicle cooling fan(s) when a transmission "overheat" condition exists. If the thermistor circuit fails, the PCM/TCM will revert to calculated oil temperature usage.

CALCULATED TEMPERATURE

A failure in the temperature sensor or circuit will result in calculated temperature being substituted for actual temperature. Calculated temperature is a predicted fluid temperature which is calculated from a combination of inputs:

- Battery (ambient) temperature
- Engine coolant temperature
- In-gear run time since start-up

REMOVAL

(1) Remove valve body assembly from transaxle. (Refer to 21 - TRANSMISSION/TRANSAXLE/AUTOMATIC - 41TE/VALVE BODY - REMOVAL)

(2) Remove transmission range sensor retaining screw and remove sensor from valve body (Fig. 309).

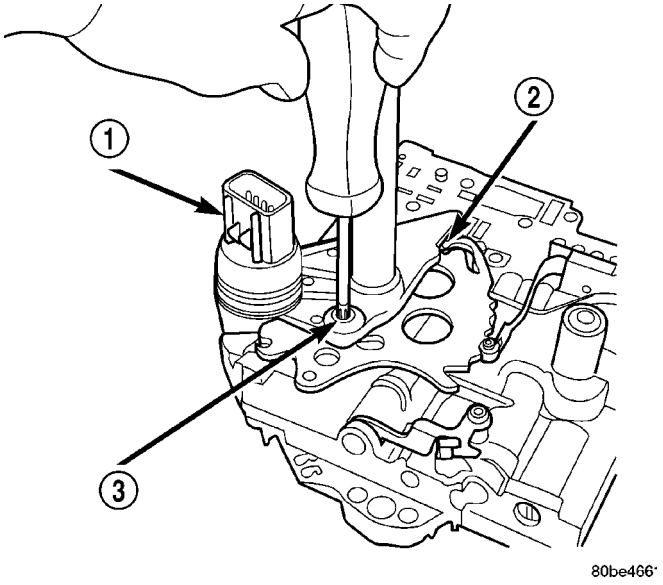

Fig. 309 Remove Transmission Range Sensor

1 - TRANSMISSION RANGE SENSOR
2 - MANUAL VALVE CONTROL PIN
3 - RETAINING SCREW

(3) Remove TRS from manual shaft.

INSTALLATION

(1) Install transmission range sensor (TRS) to the valve body and torque retaining screw (Fig. 309) to 5 N·m (45 in. lbs.).

(2) Install valve body to transaxle. (Refer to 21 - TRANSMISSION/TRANSAXLE/AUTOMATIC - 41TE/VALVE BODY - INSTALLATION)

VALVE BODY

DESCRIPTION

The valve body assembly consists of a cast aluminum valve body, a separator plate, and transfer plate. The valve body contains valves and check balls that control fluid delivery to the torque converter clutch, solenoid/pressure switch assembly, and frictional clutches. The valve body contains the following components (Fig. 310):

- Regulator valve
- Solenoid switch valve
- Manual valve
- Converter clutch switch valve
- Converter clutch control valve
- Torque converter regulator valve
- Low/Reverse switch valve

In addition, the valve body also contains the thermal valve, #2,3&4 check balls, the #5 (overdrive) check valve and the 2/4 accumulator assembly. (Refer to 21 - TRANSMISSION/TRANSAXLE/AUTOMATIC - 41TE/VALVE BODY - DISASSEMBLY)

OPERATION

NOTE: Refer to the Hydraulic Schematics for a visual aid in determining valve location, operation and design.

REGULATOR VALVE

The regulator valve controls hydraulic pressure in the transaxle. It receives unregulated pressure from the pump, which works against spring tension to maintain oil at specific pressures. A system of sleeves and ports allows the regulator valve to work at one of three predetermined pressure levels. Regulated oil pressure is also referred to as “line pressure.”

SOLENOID SWITCH VALVE

The solenoid switch valve controls line pressure from the LR/CC solenoid. In one position, it allows the low/reverse clutch to be pressurized. In the other, it directs line pressure to the converter control and converter clutch valves.

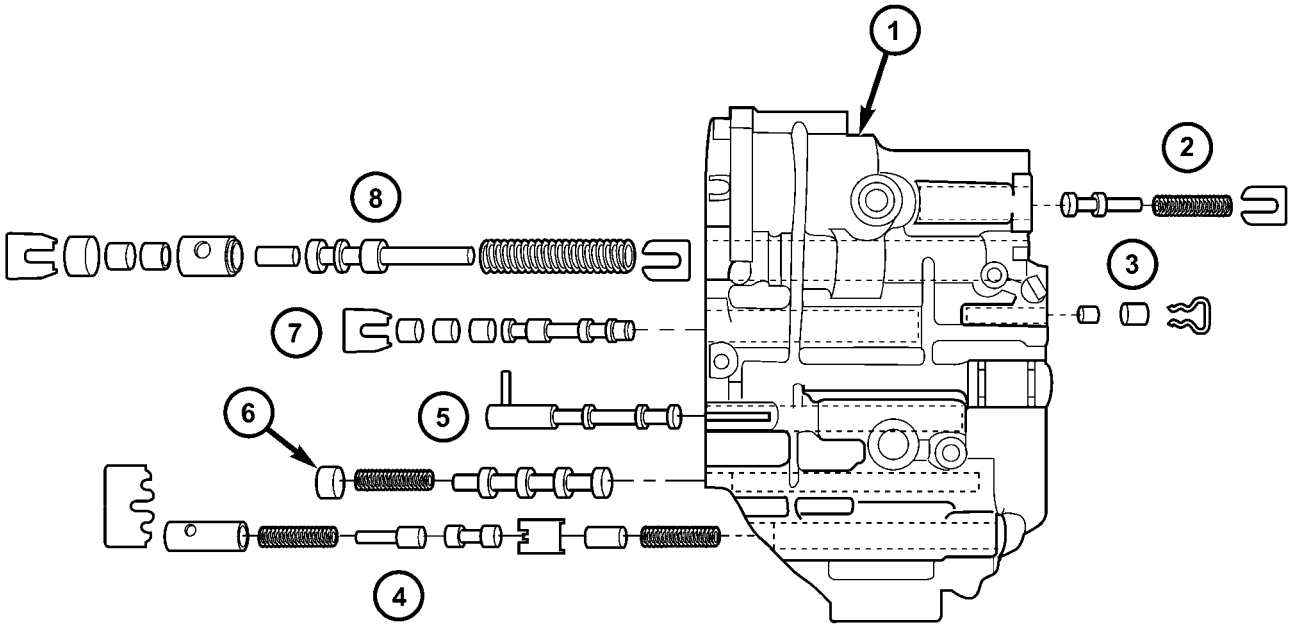

Fig. 310 Valve Body Assembly

1 - VALVE BODY
2 - T/C REGULATOR VALVE
3 - L/R SWITCH VALVE
4 - CONVERTER CLUTCH CONTROL VALVE
5 - MANUAL VALVE
6 - CONVERTER CLUTCH SWITCH VALVE
7 - SOLENOID SWITCH VALVE
8 - REGULATOR VALVE

VALVE BODY (Continued)

MANUAL VALVE

The manual valve is operated by the mechanical shift linkage. Its primary responsibility is to send line pressure to the appropriate hydraulic circuits and solenoids. The valve has three operating ranges or positions.

CONVERTER CLUTCH SWITCH VALVE

The main responsibility of the converter clutch switch valve is to control hydraulic pressure applied to the front (off) side of the converter clutch piston. Line pressure from the regulator valve is fed to the torque converter regulator valve, where it passes through the valve, and is slightly regulated. The pressure is then directed to the converter clutch switch valve and to the front side of the converter clutch piston. This pressure pushes the piston back and disengages the converter clutch.

CONVERTER CLUTCH CONTROL VALVE

The converter clutch control valve controls the back (on) side of the torque converter clutch. When the PCM/TCM energizes or modulates the LR/CC solenoid to apply the converter clutch piston, both the converter clutch control valve and the converter control valve move, allowing pressure to be applied to the back side of the clutch.

T/C REGULATOR VALVE

The torque converter regulator valve slightly regulates the flow of fluid to the torque converter.

LOW/REVERSE SWITCH VALVE

The low/reverse clutch is applied from different sources, depending on whether low (1st) gear or reverse is selected. The low/reverse switch valve alternates positions depending on from which direction fluid pressure is applied. By design, when the valve is shifted by fluid pressure from one channel, the opposing channel is blocked. The switch valve alienates the possibility of a sticking ball check, thus providing consistent application of the low/reverse clutch under all operating conditions.

REMOVAL

NOTE: If valve body is replaced or reconditioned, the "Quick-Learn" Procedure must be performed. (Refer to 8 - ELECTRICAL/ELECTRONIC CONTROL MODULES/TRANSMISSION CONTROL MODULE - STANDARD PROCEDURE)

(1) Disconnect battery negative cable.
(2) Disconnect gearshift cable from manual valve lever.
(3) Remove manual valve lever from manual shaft.
(4) Raise vehicle on hoist.
(5) Remove oil pan bolts (Fig. 311).

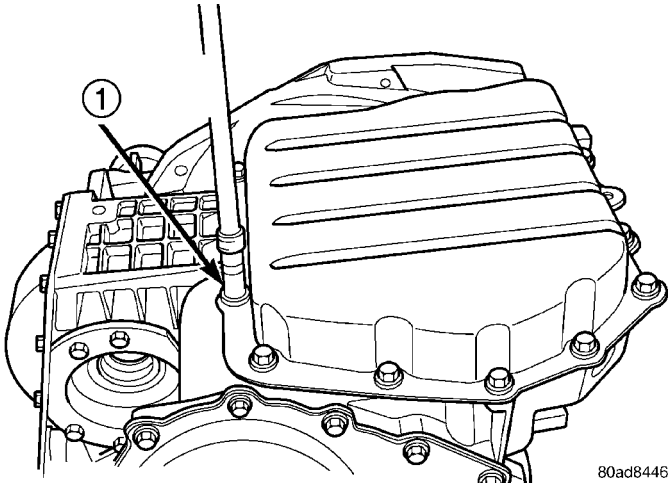

Fig. 311 Oil Pan Bolts

1 - OIL PAN BOLTS (USE RTV UNDER BOLT HEADS)

(6) Remove oil pan (Fig. 312).

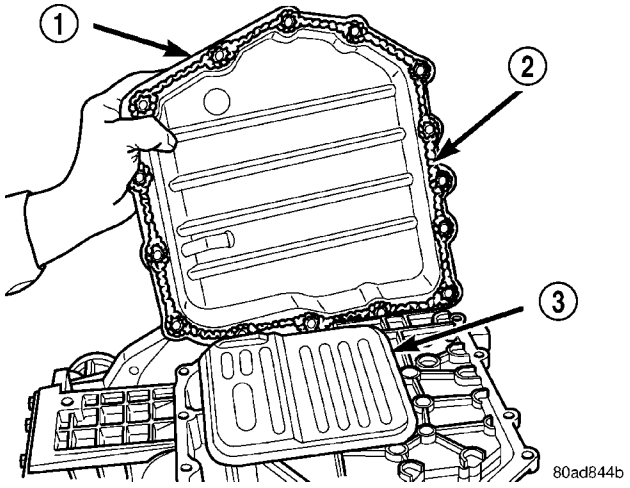

Fig. 312 Oil Pan

1 - OIL PAN
2 - 1/8 INCH BEAD OF RTV SEALANT
3 - OIL FILTER

VALVE BODY (Continued)

(7) Remove oil filter (Fig. 313).

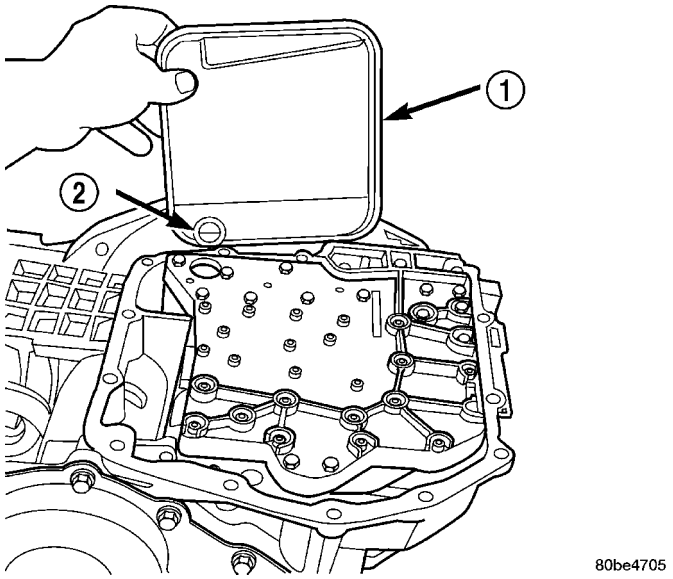

Fig. 313 Oil Filter

1 - OIL FILTER
2 - O-RING

(8) Remove the valve body-to-transaxle case bolts (Fig. 314).

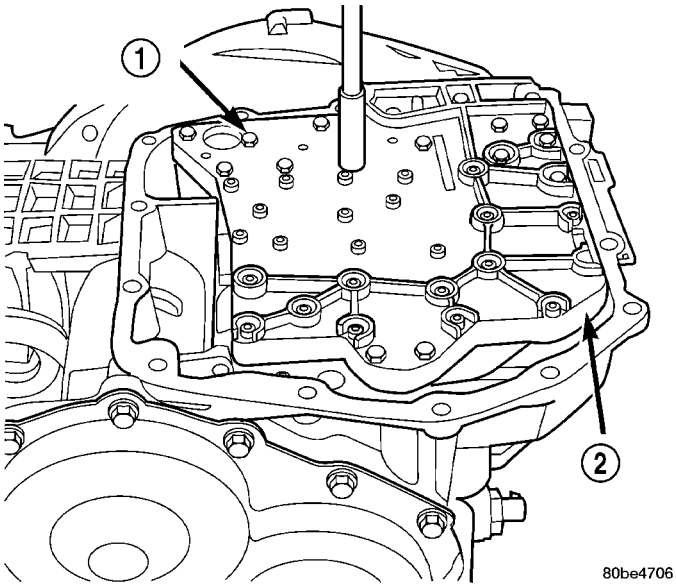

Fig. 314 Valve Body Attaching Bolts

1 - VALVE BODY ATTACHING BOLTS (18)
2 - VALVE BODY

NOTE: To ease removal of the valve body, turn the manual valve lever fully clockwise to low or first gear.

(9) Remove park rod rollers from guide bracket and remove valve body from transaxle (Fig. 315) (Fig. 316).

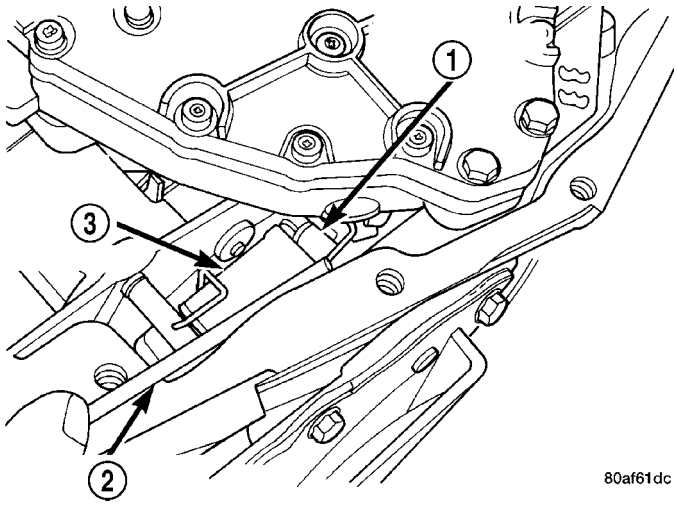

Fig. 315 Push Park Rod Rollers from Guide Bracket

1 - PARK SPRAG ROLLERS
2 - SCREWDRIVER
3 - PARK SPRAG GUIDE BRACKET

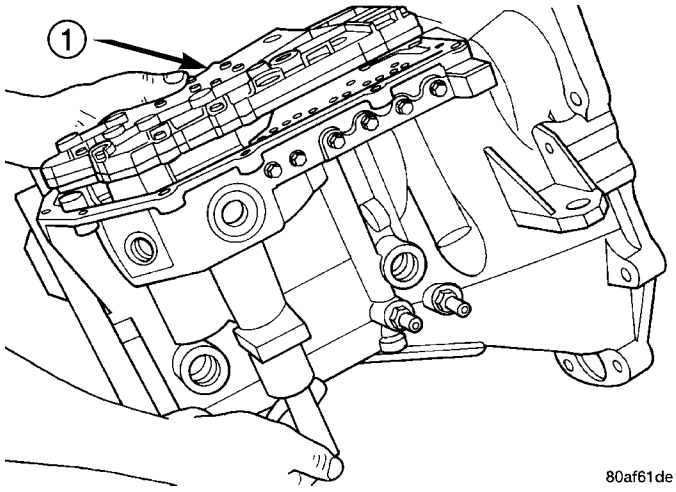

Fig. 316 Valve Body Removal/Installation

1 - VALVE BODY

CAUTION: The valve body manual shaft pilot may distort and bind the manual valve if the valve body is mishandled or dropped.

VALVE BODY (Continued)

DISASSEMBLY

NOTE: If valve body assembly is being reconditioned, the PCM/TCM Quick Learn Procedure must be performed. (Refer to 8 - ELECTRICAL/ELECTRONIC CONTROL MODULES/TRANSMISSION CONTROL MODULE - STANDARD PROCEDURE)

(1) Remove manual shaft seal (Fig. 317).

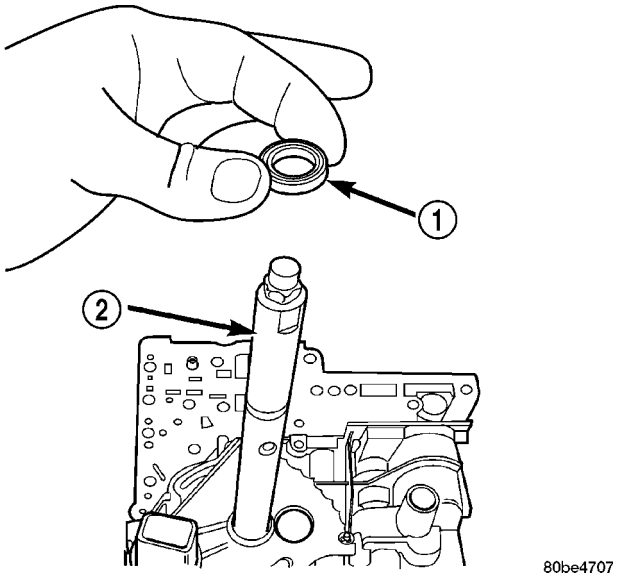

Fig. 317 Manual Shaft Seal

1 - SEAL
2 - MANUAL SHAFT

(2) Remove Transmission Range Sensor retaining screw (Fig. 318).

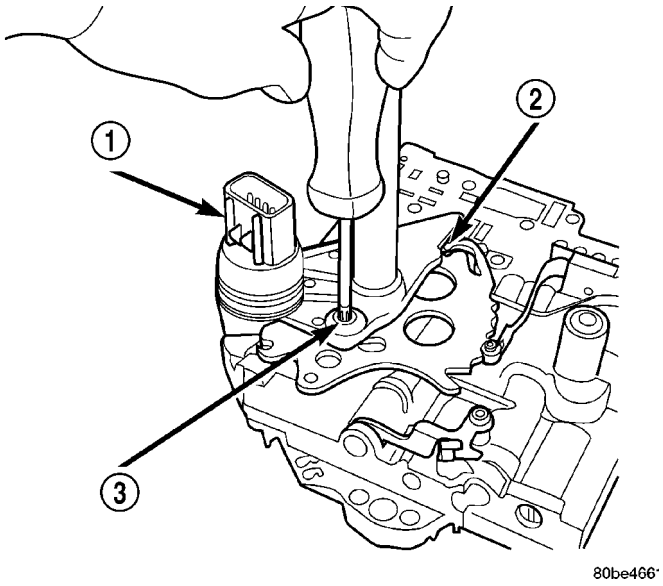

Fig. 318 Remove Transmission Range Sensor

1 - TRANSMISSION RANGE SENSOR
2 - MANUAL VALVE CONTROL PIN
3 - RETAINING SCREW

(3) Remove Manual Shaft/Rooster Comb and Transmission Range Sensor (Fig. 319).

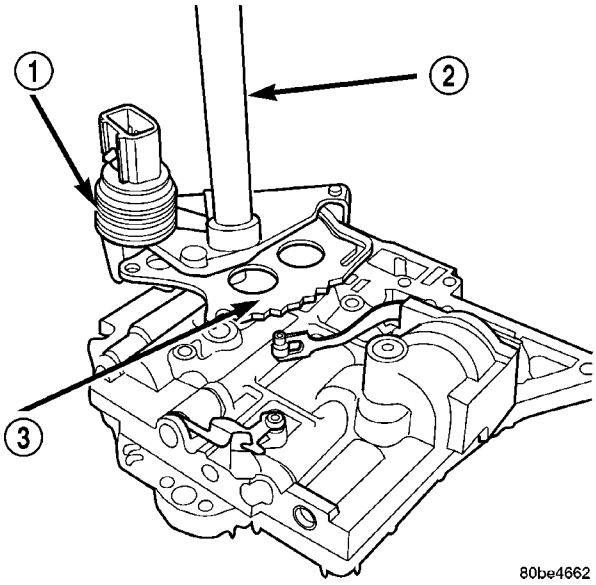

Fig. 319 Manual Shaft/Rooster Comb and Transmission Range Sensor

1 - TRANSMISSION RANGE SENSOR
2 - MANUAL SHAFT
3 - ROOSTER COMB

(4) Remove 2/4 Accumulator Retaining Plate (Fig. 320).

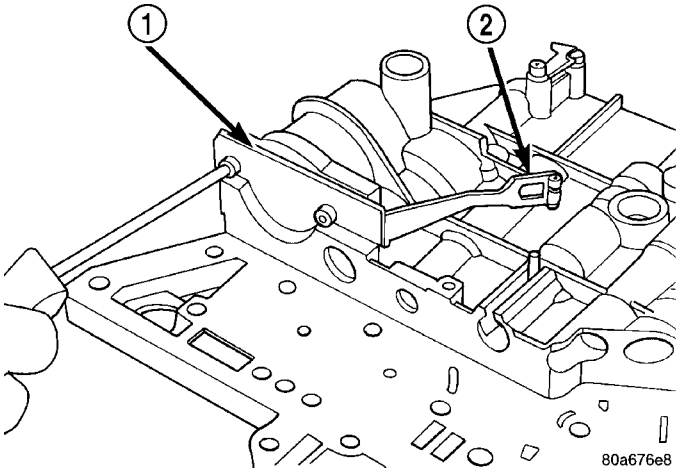

Fig. 320 2/4 Accumulator Retaining Plate

1 - 2–4 ACCUMULATOR RETAINING PLATE
2 - DETENT SPRING

VALVE BODY (Continued)

(5) Remove 2/4 Accumulator components as shown in (Fig. 321).

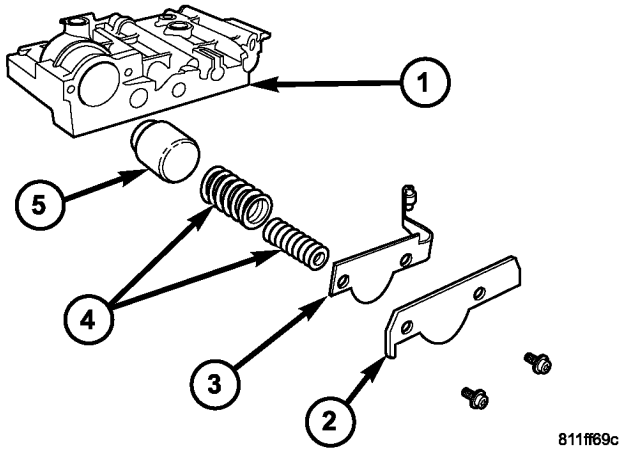

Fig. 321 2/4 Accumulator Assembly

1 - VALVE BODY
2 - RETAINER PLATE
3 - DETENT SPRING
4 - RETURN SPRINGS
5 - PISTON

(6) Remove Valve Body to Transfer Plate screws (Fig. 322).

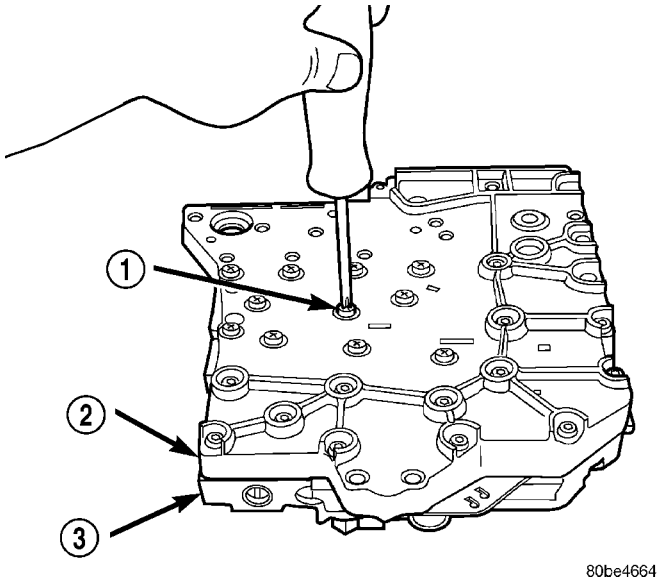

Fig. 322 Remove Valve Body to Transfer Plate Screws

1 - SCREW (24)
2 - TRANSFER PLATE
3 - VALVE BODY

(7) Invert assembly and remove Transfer Plate (Fig. 323). Beware of loose check balls.

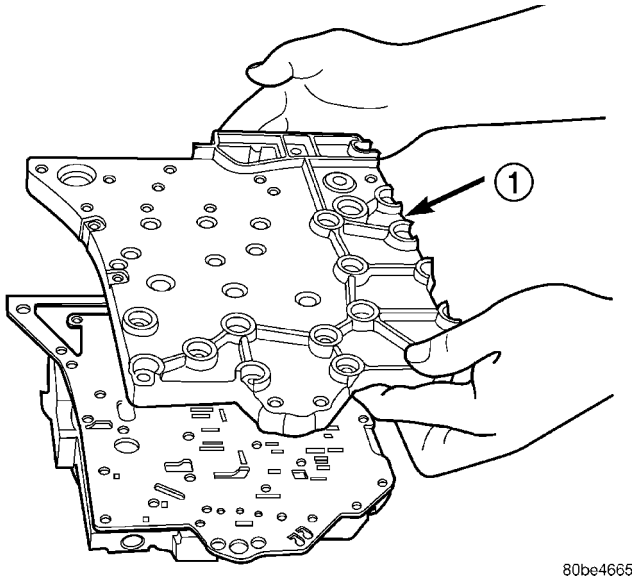

Fig. 323 Remove Transfer Plate

1 - TRANSFER PLATE

(8) Remove oil screen (Fig. 324).

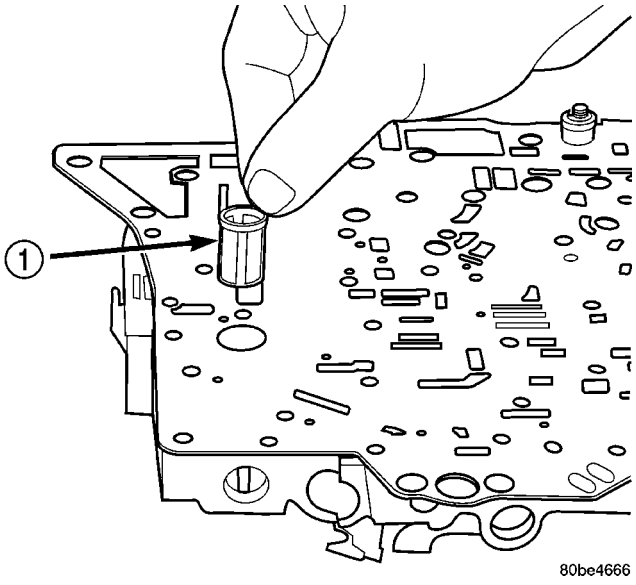

Fig. 324 Remove Oil Screen

1 - OIL SCREEN

VALVE BODY (Continued)

(9) Remove the overdrive clutch (#5) check valve (Fig. 325)

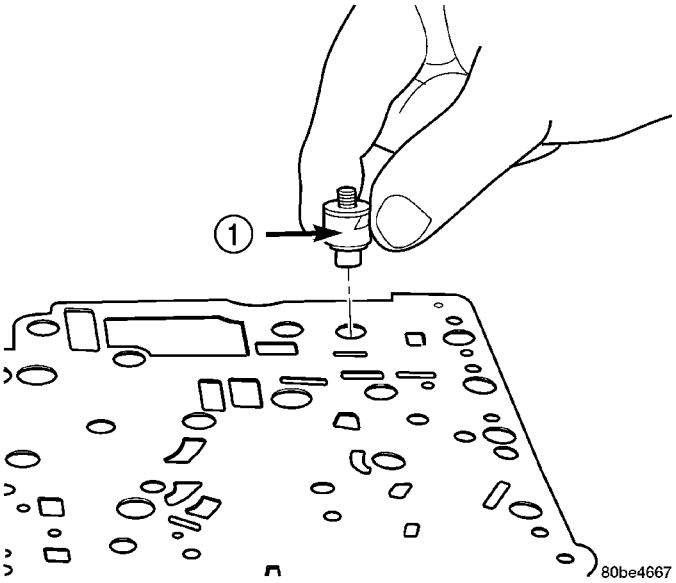

Fig. 325 Remove Overdrive Clutch (#5) Check Valve

1 - OVERDRIVE CLUTCH (#5) CHECK VALVE

(10) Remove separator plate (Fig. 326).

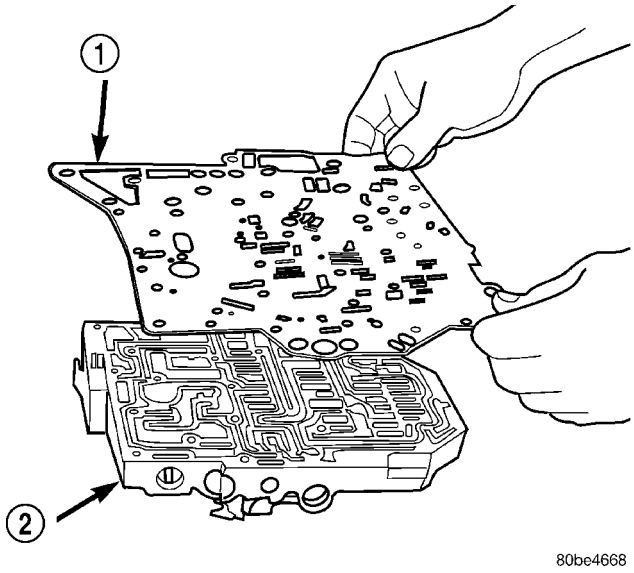

Fig. 326 Remove Separator Plate

1 - SEPARATOR PLATE
2 - VALVE BODY

(11) Remove thermal valve (Fig. 327).

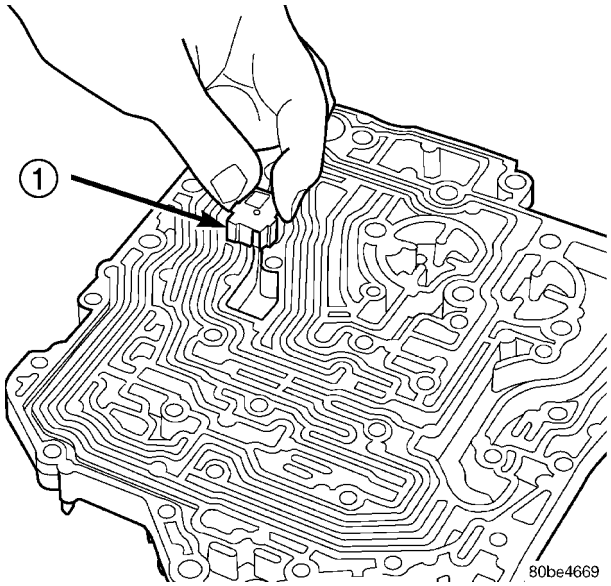

Fig. 327 Remove Thermal Valve

1 - THERMAL VALVE

(12) Remove check balls (Fig. 328).

NOTE: Tag all valve/spring assemblies for reassembly identification.

(13) Remove dual retainer plate using Tool 6301 (Fig. 329).

(14) Remove regulator valve spring retainer (Fig. 330).

VALVE BODY (Continued)

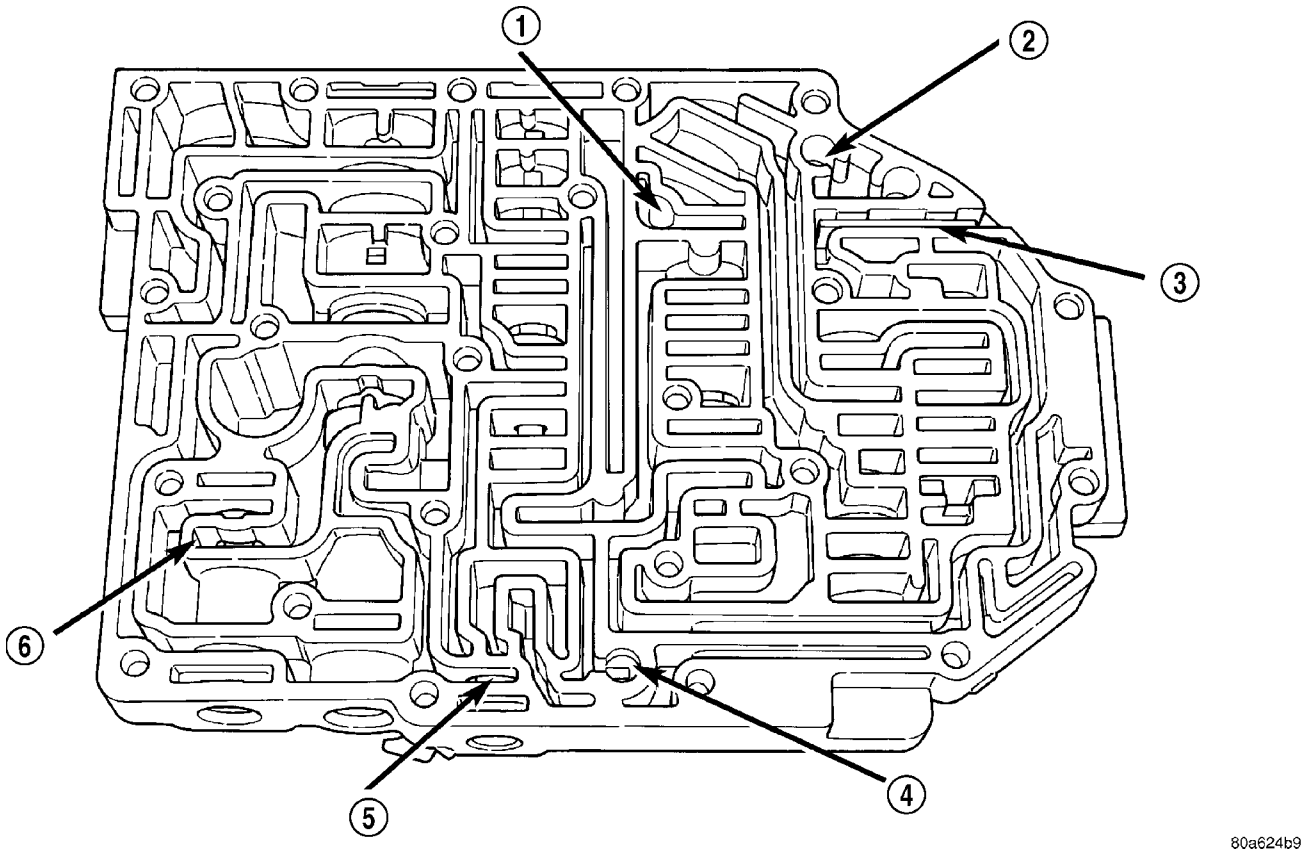

Fig. 328 Ball Check Location

1 - (#4) BALL CHECK LOCATION
2 - (#2) BALL CHECK LOCATION
3 - RETAINER
4 - (#3) BALL CHECK LOCATION
5 - LOW/REVERSE SWITCH VALVE
6 - T/C LIMIT VALVE

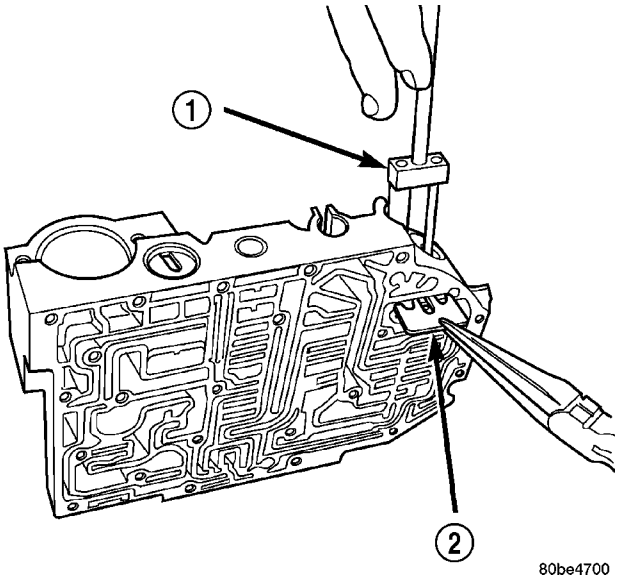

Fig. 329 Remove Dual Retainer Plate using Tool 6301

1 - TOOL 6301
2 - RETAINER

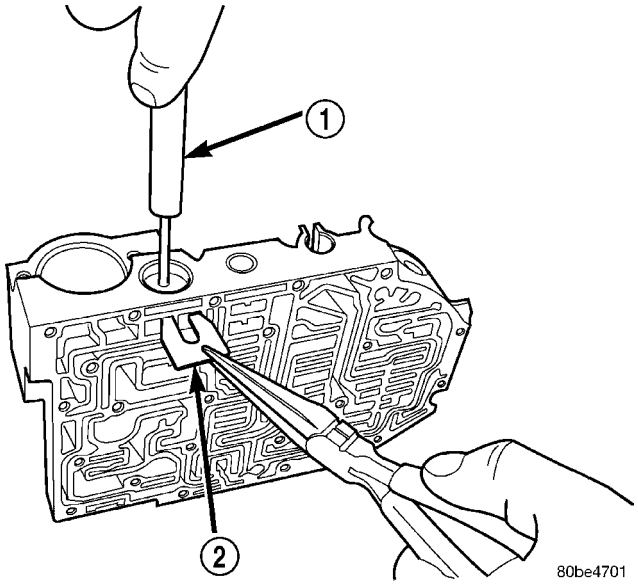

Fig. 330 Remove Regulator Valve Spring Retainer using Tool 6302

1 - TOOL 6302
2 - RETAINER

VALVE BODY (Continued)

(15) Remove remaining retainers as shown in (Fig. 331).

(16) Remove valves and springs as shown in (Fig. 332).

NOTE: Refer to Valve Body Cleaning and Inspection for cleaning procedures.

ASSEMBLY

NOTE: If valve body assembly is reconditioned, the PCM/TCM Quick Learn Procedure must be performed. (Refer to 8 - ELECTRICAL/ELECTRONIC CONTROL MODULES/TRANSMISSION CONTROL MODULE - STANDARD PROCEDURE)

(1) Install valves and springs as shown in (Fig. 332).

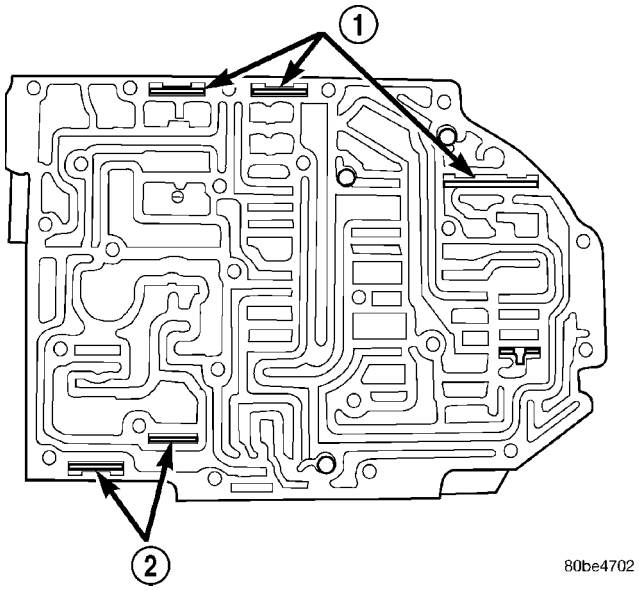

Fig. 331 Valve Retainer Location

1 - RETAINER
2 - RETAINER

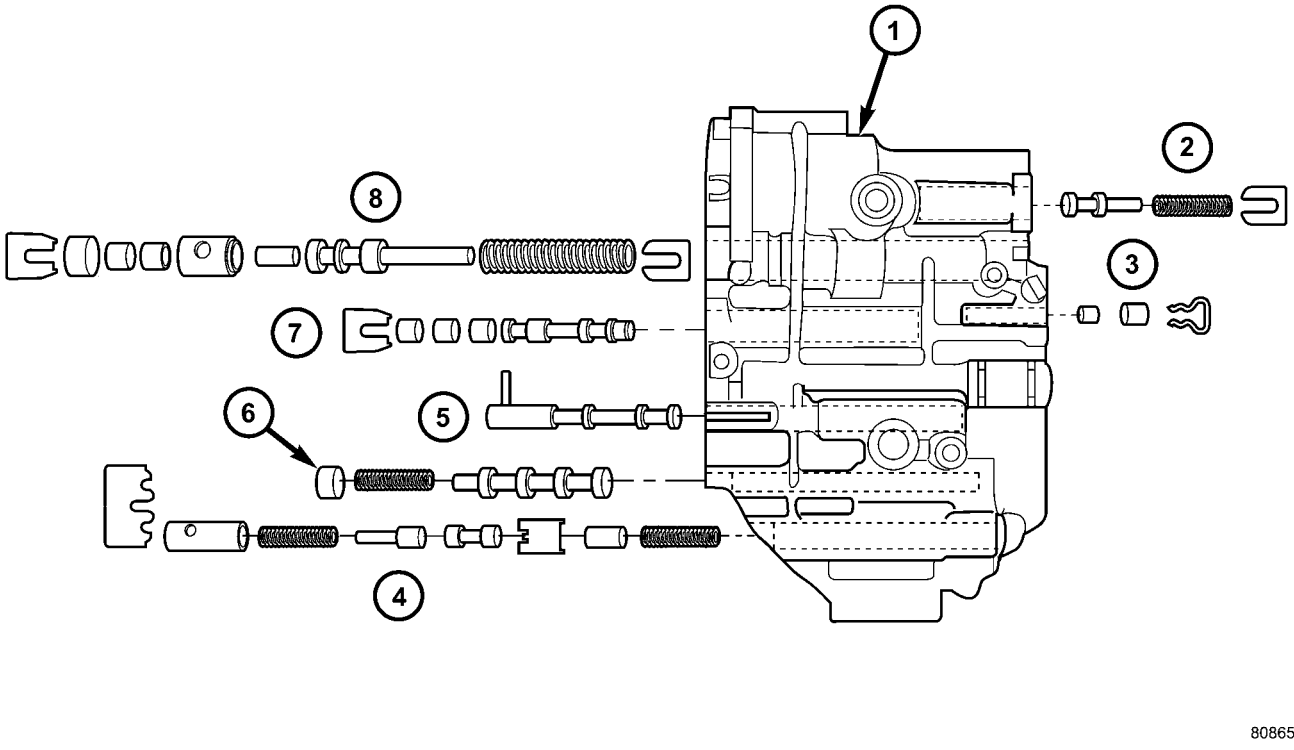

Fig. 332 Springs and Valves Location

1 - VALVE BODY
2 - T/C REGULATOR VALVE
3 - L/R SWITCH VALVE
4 - CONVERTER CLUTCH CONTROL VALVE
5 - MANUAL VALVE
6 - CONVERTER CLUTCH SWITCH VALVE
7 - SOLENOID SWITCH VALVE
8 - REGULATOR VALVE

VALVE BODY (Continued)

(2) Install regulator valve spring retainer (Fig. 333).

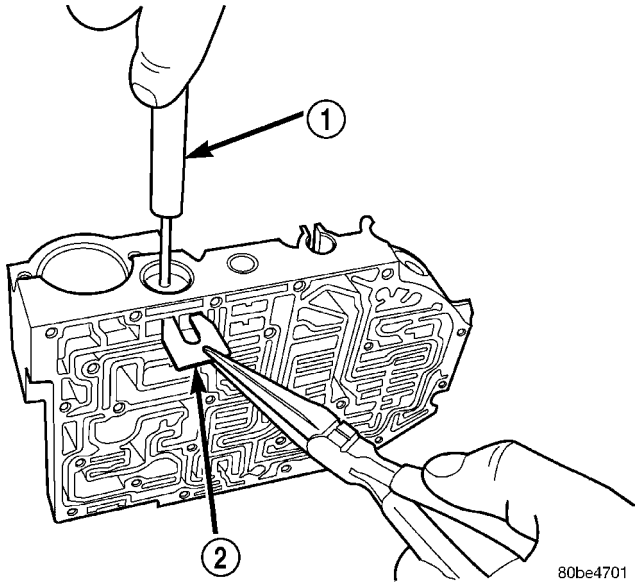

Fig. 333 Install Regulator Valve Spring Retainer using Tool 6302

1 - TOOL 6302
2 - RETAINER

(3) Install dual retainer plate using Tool 6301 (Fig. 334).

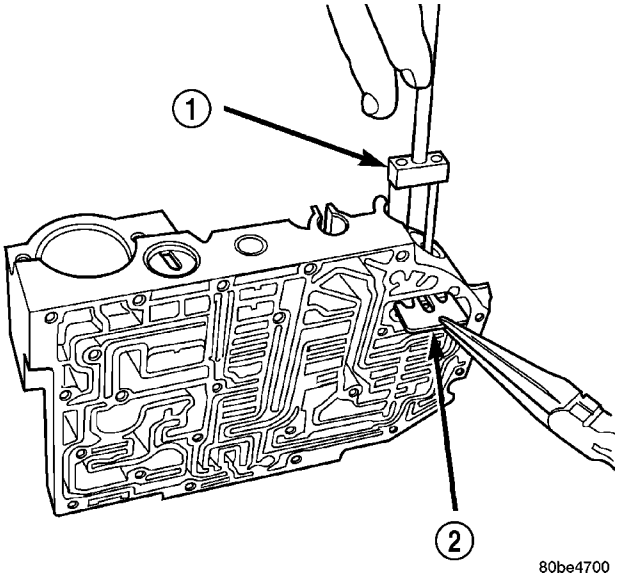

Fig. 334 Install Dual Retainer Plate using Tool 6301

1 - TOOL 6301
2 - RETAINER

(4) Verify that all retainers are installed as shown in (Fig. 335). Retainers should be flush or below valve body surface.

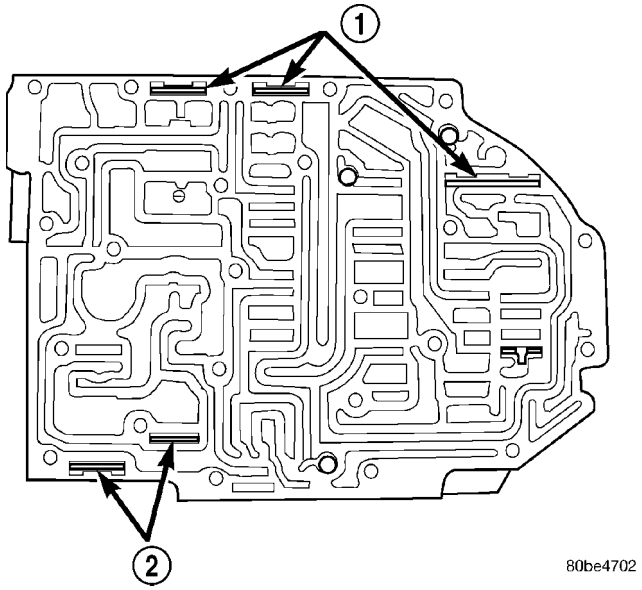

Fig. 335 Valve Retainer Location

1 - RETAINER
2 - RETAINER

(5) Install check balls into position as shown in (Fig. 336). If necessary, secure them with petrolatum or transmission assembly gel for assembly ease.

(6) Install thermal valve into transfer plate (Fig. 337).

(7) Install separator plate to valve body (Fig. 338).

VALVE BODY (Continued)

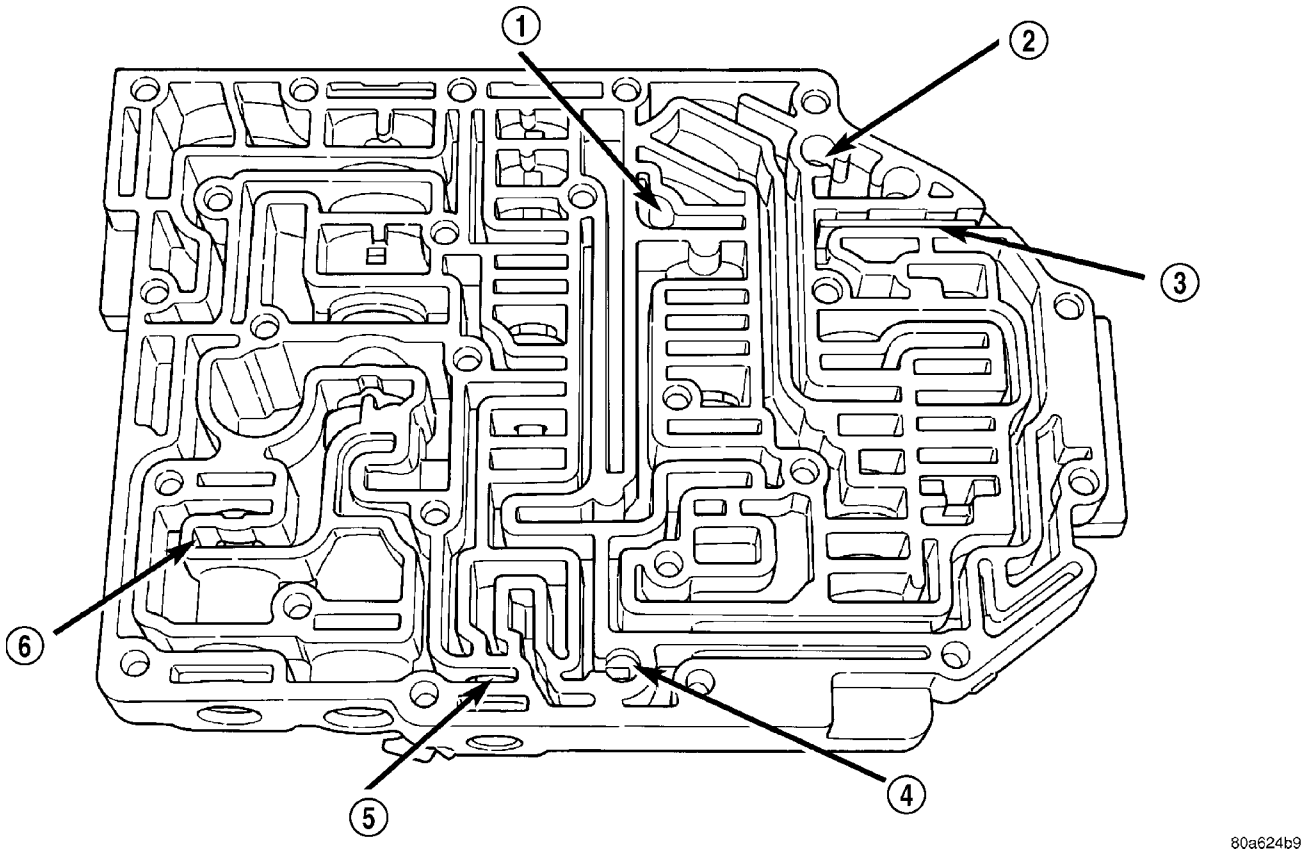

Fig. 336 Ball Check Location

1 - (#4) BALL CHECK LOCATION
2 - (#2) BALL CHECK LOCATION
3 - RETAINER
4 - (#3) BALL CHECK LOCATION
5 - LOW/REVERSE SWITCH VALVE
6 - T/C LIMIT VALVE

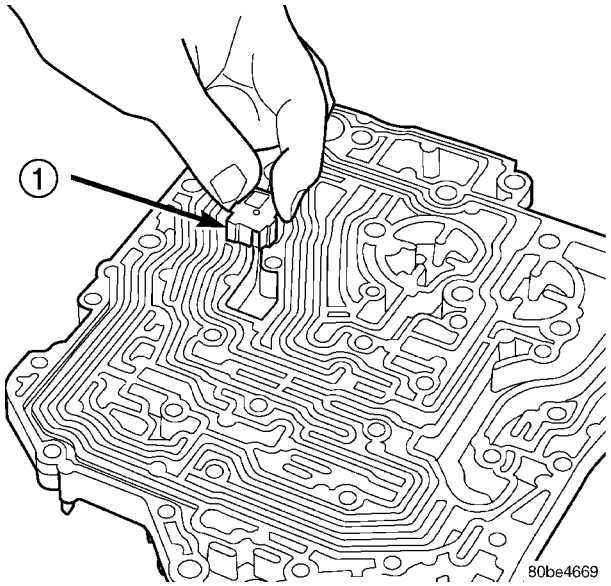

Fig. 337 Install Thermal Valve

1 - THERMAL VALVE

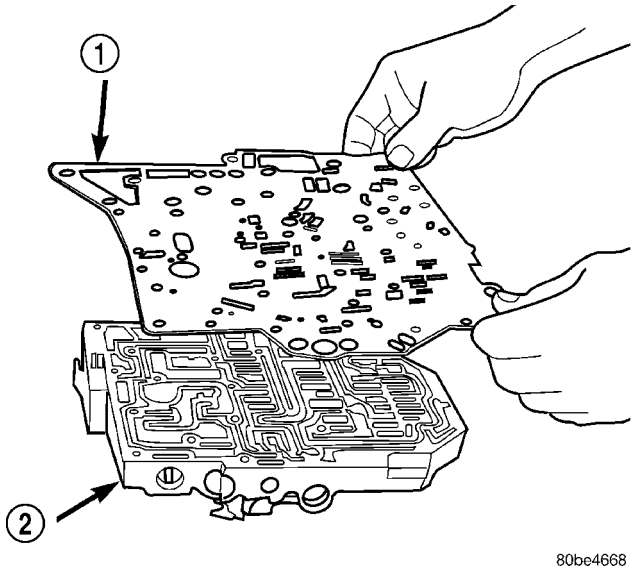

Fig. 338 Install Separator Plate

1 - SEPARATOR PLATE
2 - VALVE BODY

VALVE BODY (Continued)

(8) Install the overdrive clutch (#5) check valve to separator plate (Fig. 339)

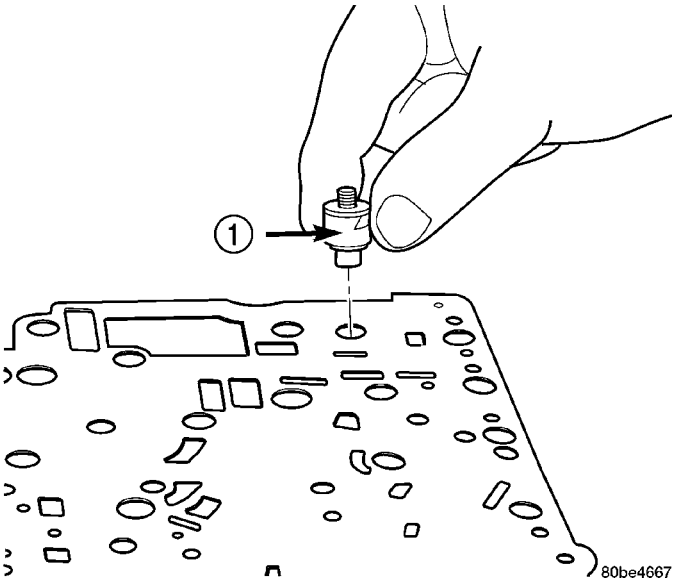

Fig. 339 Install Overdrive Clutch (#5) Check Valve

1 - OVERDRIVE CLUTCH (#5) CHECK VALVE

(9) Install oil screen to separator plate (Fig. 340).

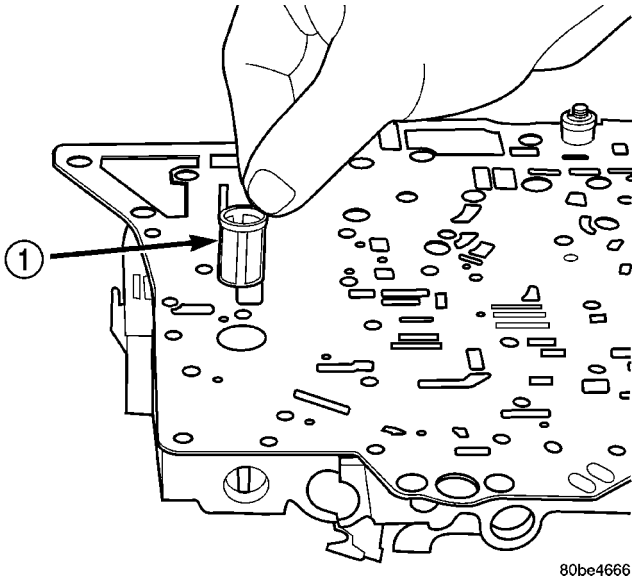

Fig. 340 Install Oil Screen

1 - OIL SCREEN

(10) Install transfer plate to valve body and separator plate. Make sure oil screen and #5 check valve do not bind (Fig. 341).

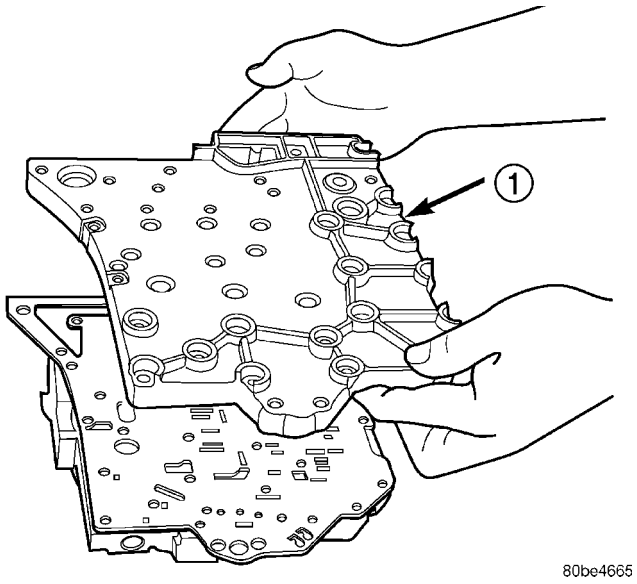

Fig. 341 Install Transfer Plate

1 - TRANSFER PLATE

(11) Install twenty-four transfer plate to valve body screws (Fig. 342) and torque to 5 N·m (45 in. lbs.).

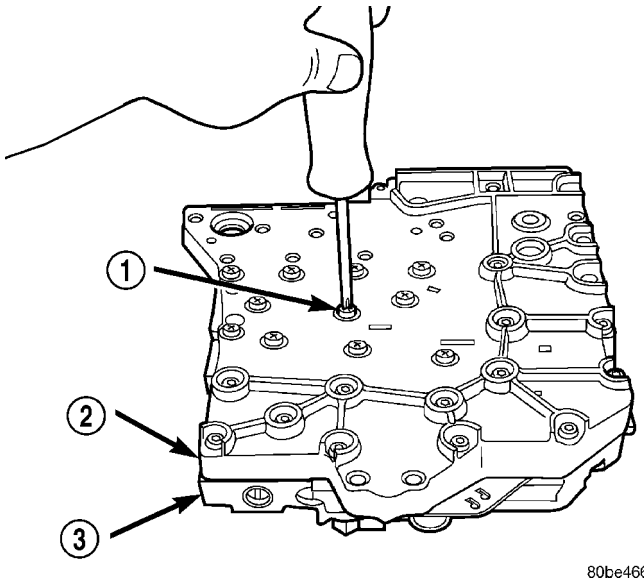

Fig. 342 Install Valve Body to Transfer Plate Screws

1 - SCREW (24)
2 - TRANSFER PLATE
3 - VALVE BODY

VALVE BODY (Continued)

(12) Install 2/4 Accumulator components as shown in (Fig. 343).

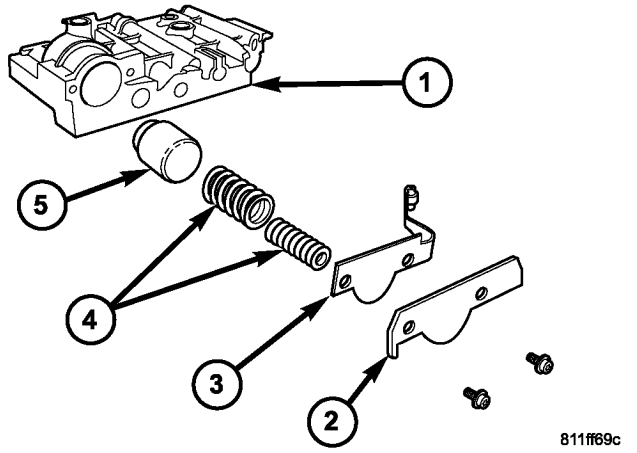

Fig. 343 2/4 Accumulator Assembly

1 - VALVE BODY
2 - RETAINER PLATE
3 - DETENT SPRING
4 - RETURN SPRINGS
5 - PISTON

(13) Torque 2/4 Accumulator retainer to 5 N·m (45 in. lbs.) (Fig. 344).

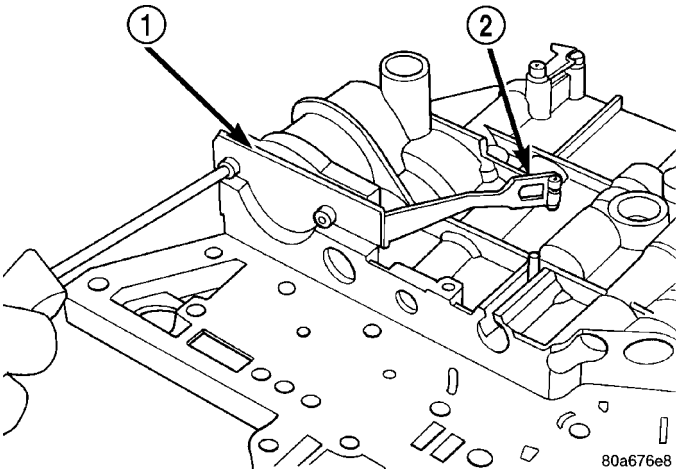

Fig. 344 2/4 Accumulator Retaining Plate

1 - 2–4 ACCUMULATOR RETAINING PLATE
2 - DETENT SPRING

(14) Install Manual Shaft/Rooster Comb and Transmission Range Sensor (Fig. 345).

(15) Make sure Manual Valve control pin is contained within the rooster comb slot (Fig. 346). Install Transmission Range Sensor retaining screw (Fig. 346) and torque to 5 N·m (45 in. lbs.).

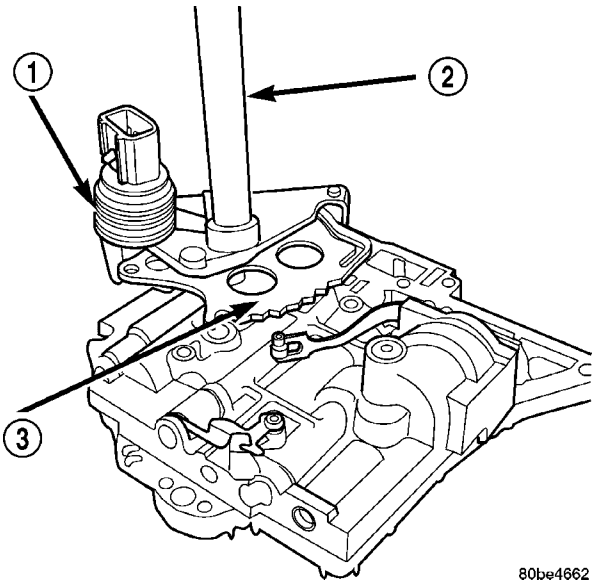

Fig. 345 Install Manual Shaft/Rooster Comb and Transmission Range Sensor

1 - TRANSMISSION RANGE SENSOR
2 - MANUAL SHAFT
3 - ROOSTER COMB

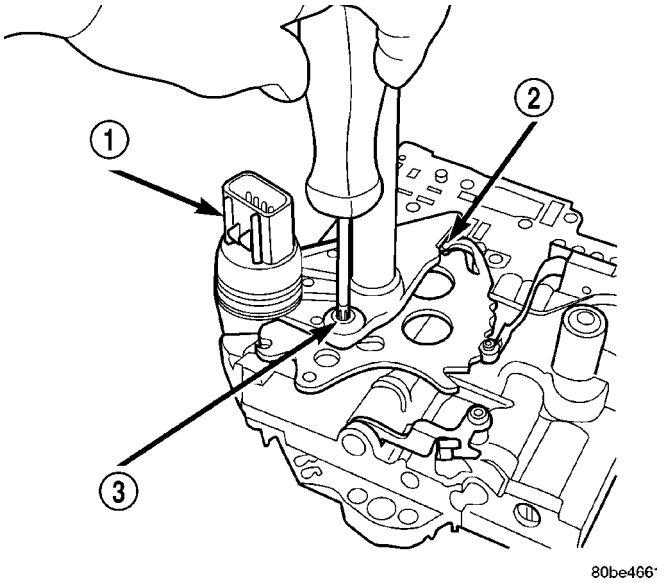

Fig. 346 Install Transmission Range Sensor Retaining Screw

1 - TRANSMISSION RANGE SENSOR
2 - MANUAL VALVE CONTROL PIN
3 - RETAINING SCREW

VALVE BODY (Continued)

(16) Install manual shaft seal (Fig. 347).

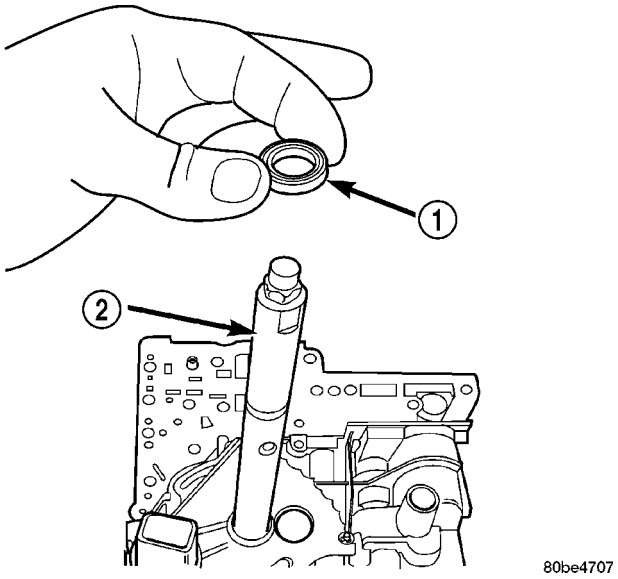

Fig. 347 Manual Shaft Seal

1 - SEAL
2 - MANUAL SHAFT

INSTALLATION

NOTE: If valve body assembly is being replaced or reconditioned, the "Quick-Learn" procedure must be performed. (Refer to 8 - ELECTRICAL/ELECTRONIC CONTROL MODULES/TRANSMISSION CONTROL MODULE - STANDARD PROCEDURE)

(1) Install valve body assembly to transaxle (Fig. 348). Install and torque valve body-to-transaxle case bolts (Fig. 349) to 12 N·m (105 in. lbs.).

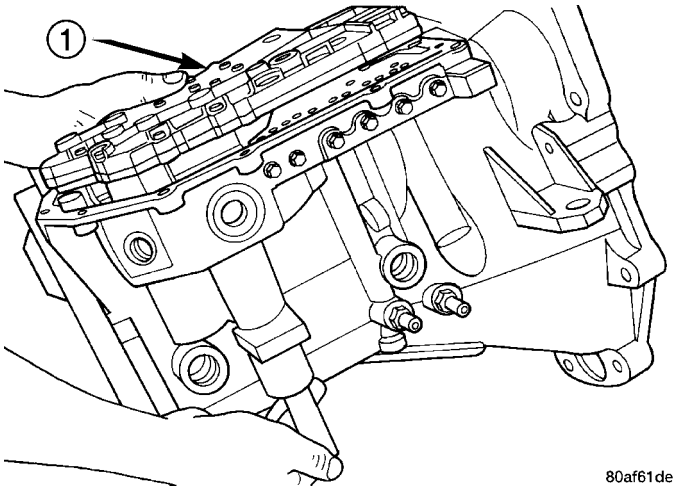

Fig. 348 Valve Body Removal/Installation

1 - VALVE BODY

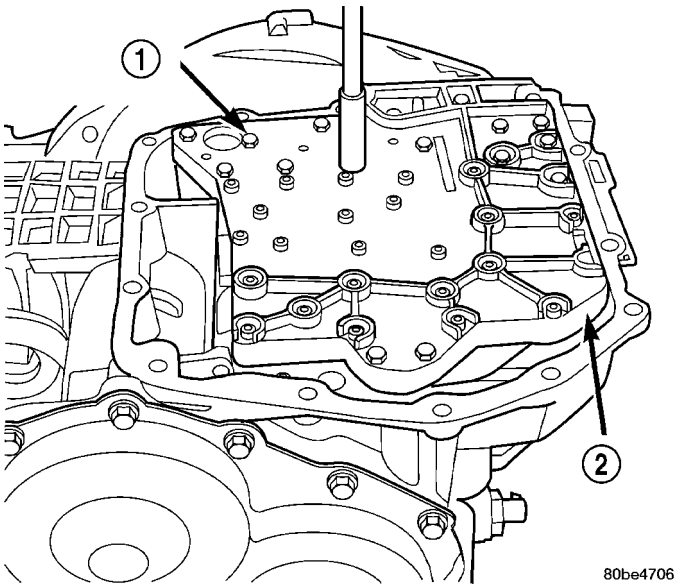

Fig. 349 Valve Body Attaching Bolts

1 - VALVE BODY ATTACHING BOLTS (18)
2 - VALVE BODY

(2) Install transaxle oil filter (Fig. 350). Inspect the o-ring and replace if necessary.

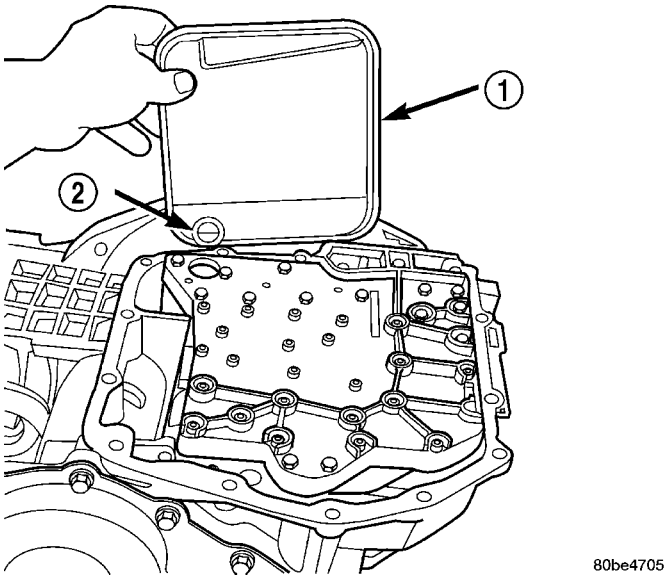

Fig. 350 Oil Filter

1 - OIL FILTER
2 - O-RING

VALVE BODY (Continued)

(3) Ensure the transaxle oil pan and transaxle case sealing surfaces are clean and dry. Install an 1/8” bead of Mopar® Silicone Rubber Adhesive Sealant to the oil pan and install (Fig. 351). Torque oil pan-to-transaxle case bolts (Fig. 352) to 19 N·m (165 in. lbs.).

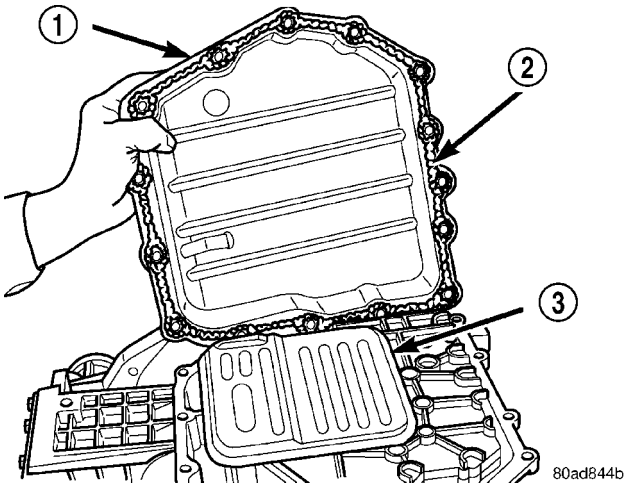

Fig. 351 Oil Pan

1 - OIL PAN
2 - 1/8 INCH BEAD OF RTV SEALANT
3 - OIL FILTER

(4) Lower vehicle.

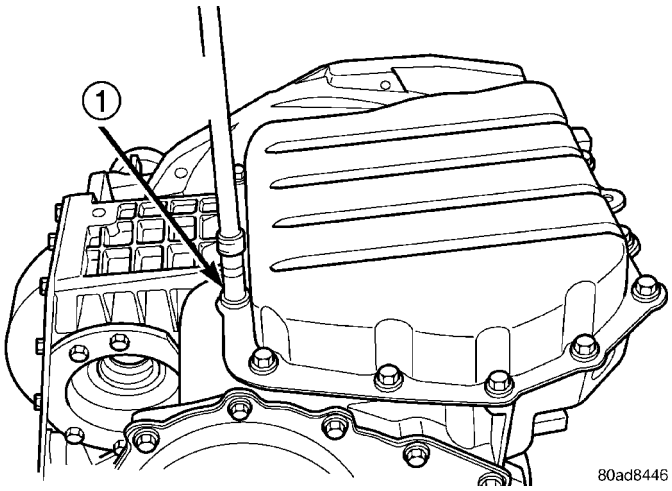

Fig. 352 Oil Pan Bolts

1 - OIL PAN BOLTS (USE RTV UNDER BOLT HEADS)

(5) Connect transmission range sensor connector.
(6) Install manual valve lever to manual shaft.
(7) Install gearshift cable to manual valve lever.
(8) Connect battery negative cable.
(9) Fill transaxle with Mopar® ATF +4 Transmission fluid. (Refer to 21 - TRANSMISSION/TRANSAXLE/AUTOMATIC - 41TE/FLUID - STANDARD PROCEDURE)

41TE AUTOMATIC TRANSAXLE

TABLE OF CONTENTS

page

41TE AUTOMATIC TRANSAXLE
DESCRIPTION 147
OPERATION 149
DIAGNOSIS AND TESTING
DIAGNOSIS AND TESTING - 4XTE TRANSAXLE GENERAL DIAGNOSIS 149
DIAGNOSIS AND TESTING - ROAD TEST . . 150
DIAGNOSIS AND TESTING - HYDRAULIC PRESSURE TESTS 150
DIAGNOSIS AND TESTING - CLUTCH AIR PRESSURE TESTS 153
DIAGNOSIS AND TESTING - TORQUE CONVERTER HOUSING FLUID LEAKAGE . . 154
REMOVAL 154
DISASSEMBLY 157
ASSEMBLY 174
INSTALLATION 196
SCHEMATICS AND DIAGRAMS
4XTE TRANSAXLE HYDRAULIC SCHEMATICS 199
SPECIFICATIONS - 41TE TRANSAXLE 211
SPECIAL TOOLS
41TE AUTOMATIC TRANSAXLE 213
ACCUMULATOR
DESCRIPTION 218
OPERATION 218
DRIVING CLUTCHES
DESCRIPTION 219
OPERATION 219
FINAL DRIVE
DESCRIPTION 219
OPERATION 220
DISASSEMBLY 220
ASSEMBLY 224
ADJUSTMENTS
ADJUSTMENT - DIFFERENTIAL BEARING PRELOAD 228
FLUID
STANDARD PROCEDURE
FLUID LEVEL AND CONDITION CHECK . . . 230
STANDARD PROCEDURE - FLUID AND FILTER SERVICE 231
GEAR SHIFT CABLE
REMOVAL 233
INSTALLATION 234
ADJUSTMENTS
GEARSHIFT CABLE ADJUSTMENT 235
HOLDING CLUTCHES
DESCRIPTION 236
OPERATION 236

page

INPUT CLUTCH ASSEMBLY
DISASSEMBLY 237
ASSEMBLY 246
OIL PUMP
DESCRIPTION 261
OPERATION 261
DISASSEMBLY 261
ASSEMBLY 263
PLANETARY GEARTRAIN
DESCRIPTION 263
OPERATION 263
SEAL - OIL PUMP
REMOVAL 264
INSTALLATION 264
SHIFT INTERLOCK SOLENOID
DESCRIPTION 264
OPERATION 265
DIAGNOSIS AND TESTING - BRAKE/ TRANSMISSION SHIFT INTERLOCK SOLENOID 266
REMOVAL 266
INSTALLATION 267
SOLENOID/PRESSURE SWITCH ASSY
DESCRIPTION 268
OPERATION 268
REMOVAL 269
INSTALLATION 270
SPEED SENSOR - INPUT
DESCRIPTION 271
OPERATION 271
REMOVAL 272
INSTALLATION 272
SPEED SENSOR - OUTPUT
DESCRIPTION 273
OPERATION 273
REMOVAL 274
INSTALLATION 274
TORQUE CONVERTER
DESCRIPTION 275
OPERATION 278
REMOVAL 280
INSTALLATION 280
TRANSMISSION CONTROL RELAY
DESCRIPTION 281
OPERATION 281
TRANSMISSION RANGE SENSOR
DESCRIPTION 281
OPERATION 282
REMOVAL 282
INSTALLATION 282

VALVE BODY
DESCRIPTION 283
OPERATION 283
REMOVAL 284
DISASSEMBLY 286
ASSEMBLY 291
INSTALLATION 295

41TE AUTOMATIC TRANSAXLE

DESCRIPTION

The 41TE (Fig. 1) is a four-speed transaxle that is a conventional hydraulic/mechanical assembly with an integral differential, and is controlled with adaptive electronic controls and monitors. The hydraulic system of the transaxle consists of the transaxle fluid, fluid passages, hydraulic valves, and various line pressure control components. An input clutch assembly which houses the underdrive, overdrive, and reverse clutches is used. It also utilizes separate holding clutches: 2nd/4th gear and Low/Reverse. The primary mechanical components of the transaxle consist of the following:

- Three multiple disc input clutches
- Two multiple disc holding clutches
- Four hydraulic accumulators
- Two planetary gear sets
- Hydraulic oil pump
- Valve body
- Solenoid/Pressure switch assembly
- Integral differential assembly

Control of the transaxle is accomplished by fully adaptive electronics. Optimum shift scheduling is accomplished through continuous real-time sensor feedback information provided to the Powertrain Control Module (PCM) or Transmission Control Module (TCM).

The PCM/TCM is the heart of the electronic control system and relies on information from various direct and indirect inputs (sensors, switches, etc.) to determine driver demand and vehicle operating conditions. With this information, the PCM/TCM can calculate and perform timely and quality shifts through various output or control devices (solenoid pack, transmission control relay, etc.).

The PCM/TCM also performs certain self-diagnostic functions and provides comprehensive information (sensor data, DTC's, etc.) which is helpful in proper diagnosis and repair. This information can be viewed with the DRB scan tool.

41TE AUTOMATIC TRANSAXLE (Continued)

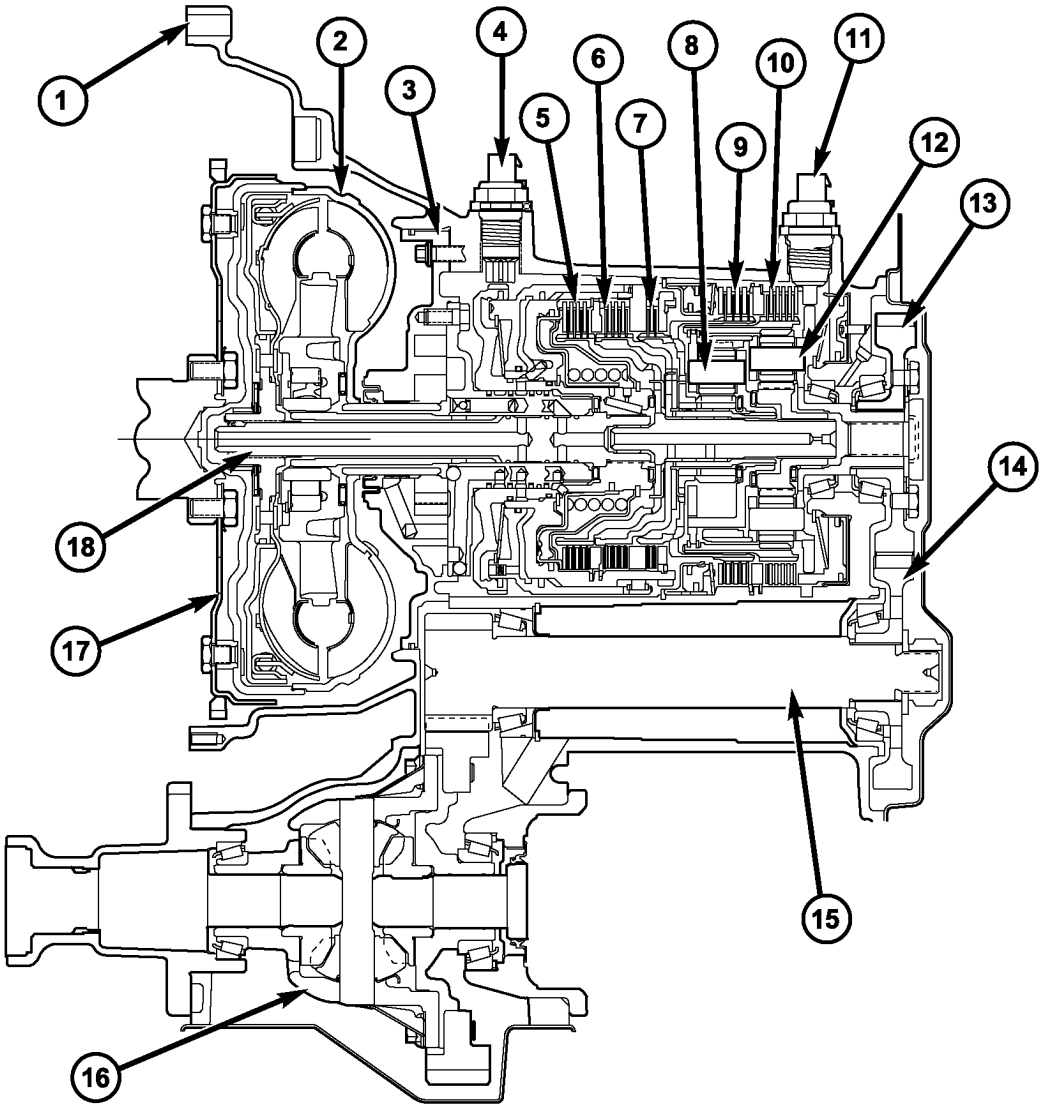

Fig. 1 41TE Automatic Transaxle

1 - TRANSAXLE CASE
2 - TORQUE CONVERTER
3 - OIL PUMP
4 - INPUT SPEED SENSOR
5 - UNDERDRIVE CLUTCH
6 - OVERDRIVE CLUTCH
7 - REVERSE CLUTCH
8 - FRONT PLANET CARRIER
9 - 2/4 CLUTCH
10 - L/R CLUTCH
11 - OUTPUT SPEED SENSOR
12 - REAR PLANET CARRIER/OUTPUT SHAFT
13 - OUTPUT SHAFT GEAR
14 - TRANSFER SHAFT GEAR
15 - TRANSFER SHAFT
16 - DIFFERENTIAL
17 - CONVERTER DRIVE PLATE
18 - INPUT SHAFT

41TE AUTOMATIC TRANSAXLE (Continued)

TRANSAXLE IDENTIFICATION

The 41TE transaxle is identified by a barcode label that is fixed to the transaxle case as shown in (Fig. 2).

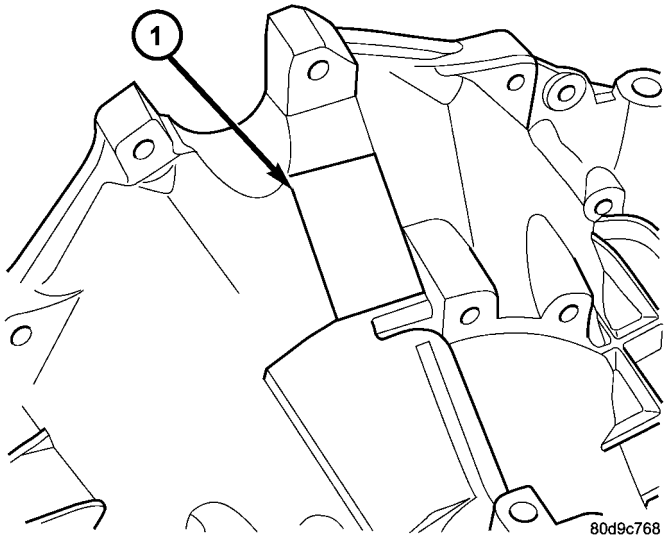

Fig. 2 Transaxle Identification Label

1 - IDENTIFICATION LABEL

The label contains a series of digits that can be translated into useful information such as transaxle part number, date of manufacture, manufacturing origin, plant shift number, build sequence number, etc. Refer to (Fig. 3) for identification label breakdown.

If the tag is not legible or missing, the “PK” number, which is stamped into the transaxle case behind the transfer gear cover, can be referred to for identification. This number differs slightly in that it contains the entire transaxle part number, rather than the last three digits.

OPERATION

Transmission output is directed to an integral differential by a transfer gear system in the following input-to-output ratios:

First	2.84 : 1
Second	1.57 : 1
Third	1.00 : 1
Overdrive	0.69 : 1
Reverse	2.21 : 1

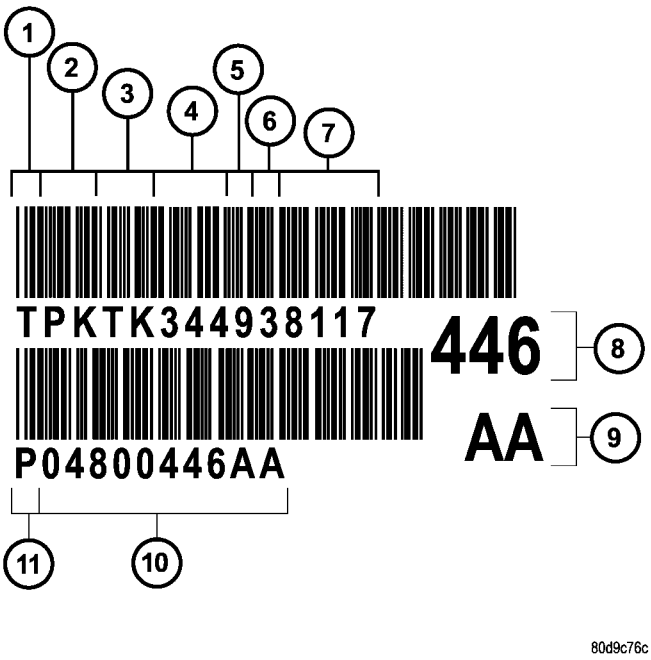

Fig. 3 Identification Label Breakdown

1 - T=TRACEABILITY
2 - SUPPLIER CODE (PK=KOKOMO)
3 - COMPONENT CODE (TK=KOKOMO TRANSMISSION)
4 - BUILD DAY (344=DEC. 9)
5 - BUILD YEAR (9=1999)
6 - LINE/SHIFT CODE (3=3RD SHIFT)
7 - BUILD SEQUENCE NUMBER
8 - LAST THREE OF P/N
9 - ALPHA
10 - TRANSAXLE PART NUMBER
11 - P=PART NUMBER

DIAGNOSIS AND TESTING

DIAGNOSIS AND TESTING - 4XTE TRANSAXLE GENERAL DIAGNOSIS

NOTE: Before attempting any repair on a 4XTE four-speed automatic transaxle, check for diagnostic trouble codes (DTC’s) using the DRB scan tool. Refer to the Transmission Diagnostic Procedures Manual.

Transaxle malfunctions may be caused by these general conditions:

- Poor engine performance
- Improper adjustments
- Hydraulic malfunctions
- Mechanical malfunctions
- Electronic malfunctions

Diagnosis of these problems should always begin by checking the easily accessible variables: fluid level and condition, gearshift cable adjustment. Then perform a road test to determine if the problem has been corrected or that more diagnosis is necessary. If the problem persists after the preliminary tests and corrections are completed, hydraulic pressure checks should be performed.

DIAGNOSIS AND TESTING - ROAD TEST

Prior to performing a road test, verify that the fluid level, fluid condition, and linkage adjustment have been approved.

During the road test, the transaxle should be operated in each position to check for slipping and any variation in shifting.

If the vehicle operates properly at highway speeds, but has poor acceleration, the converter stator overrunning clutch may be slipping. If acceleration is normal, but high throttle opening is needed to maintain highway speeds, the converter stator clutch may have seized. Both of these stator defects require replacement of the torque converter and thorough transaxle cleaning.

Slipping clutches can be isolated by comparing the "Elements in Use" chart with clutch operation encountered on a road test. This chart identifies which clutches are applied at each position of the selector lever.

A slipping clutch may also set a DTC and can be determined by operating the transaxle in all selector positions.

ELEMENTS IN USE AT EACH POSITION OF SELECTOR LEVER

Shift Lever Position	INPUT CLUTCHES			HOLDING CLUTCHES	
	Underdrive	Overdrive	Reverse	2/4	Low/Reverse
P - PARK					X
R - REVERSE			X		X
N - NEUTRAL					X
OD - OVERDRIVE					
First	X				X
Second	X			X	
Direct	X	X			
Overdrive		X		X	
D - DRIVE*					
First	X				X
Second	X			X	
Direct	X	X			
L - LOW*					
First	X				X
Second	X			X	
Direct	X	X			
* Vehicle upshift and downshift speeds are increased when in these selector positions.					

The process of elimination can be used to detect any unit which slips and to confirm proper operation of good units. Road test analysis can diagnose slipping units, but the cause of the malfunction cannot be determined. Practically any condition can be caused by leaking hydraulic circuits or sticking valves.

DIAGNOSIS AND TESTING - HYDRAULIC PRESSURE TESTS

Pressure testing is a very important step in the diagnostic procedure. These tests usually reveal the cause of most hydraulic transaxle problems.

Before performing pressure tests, be certain that fluid level and condition, and shift cable adjustments have been checked and approved. Fluid must be at operating temperature (150 to 200 degrees F.).

Install an engine tachometer, raise vehicle on hoist which allows front wheels to turn, and position tachometer so it can be read.

41TE AUTOMATIC TRANSAXLE (Continued)

Attach 300 psi gauge (C-3293SP) to port(s) required for test(s) being conducted. Use adapter set L-4559 to adapt gauge(s) to transaxle.

Test port locations are shown in (Fig. 4).

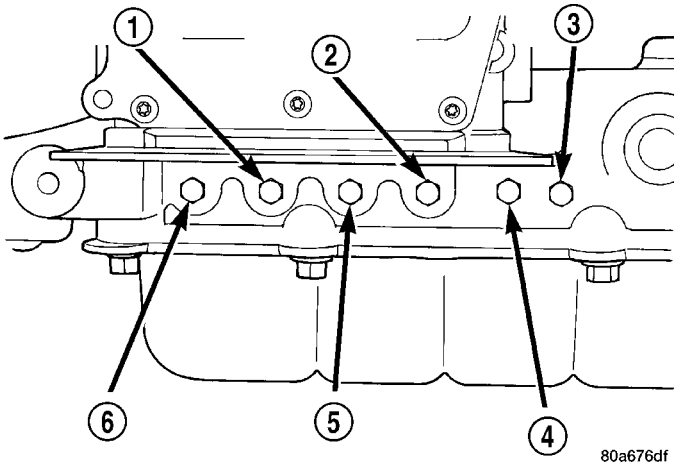

Fig. 4 Pressure Taps

1 - OVERDRIVE CLUTCH
2 - TORQUE CONVERTER OFF
3 - LOW/REVERSE CLUTCH
4 - 2/4 CLUTCH
5 - REVERSE CLUTCH
6 - UNDERDRIVE CLUTCH

TEST ONE-SELECTOR IN LOW (1st GEAR)

(1) Attach pressure gauge to the low/reverse clutch tap.

(2) Move selector lever to the (L) position.

(3) Allow vehicle wheels to turn and increase throttle opening to achieve an indicated vehicle speed to 20 mph.

(4) Low/reverse clutch pressure should read 115 to 145 psi.

(5) This test checks pump output, pressure regulation and condition of the low/reverse clutch hydraulic circuit and shift schedule.

TEST TWO-SELECTOR IN DRIVE (2nd GEAR)

NOTE: This test checks the underdrive clutch hydraulic circuit as well as the shift schedule.

(1) Attach gauge to the underdrive clutch tap.

(2) Move selector lever to the 3 position.

(3) Allow vehicle wheels to turn and increase throttle opening to achieve an indicated vehicle speed of 30 mph.

(4) In second gear the underdrive clutch pressure should read 110 to 145 psi.

TEST TWO A–SELECTOR IN OD (4th Gear)

NOTE: This test checks the underdrive clutch hydraulic circuit as well as the shift schedule.

(1) Attach gauge to the underdrive clutch tap.

(2) Move selector lever to the (OD) position.

(3) Allow wheels to rotate freely and increase throttle opening to achieve an indicated speed of 40 mph.

(4) Underdrive clutch pressure should read below 5 psi. If not, then either the solenoid assembly or PCM/TCM is at fault.

TEST THREE-OVERDRIVE CLUTCH CHECK (3rd and 2nd Gear)

(1) Attach gauge to the overdrive clutch tap.

(2) Move selector lever to the (OD) position.

(3) Allow vehicle wheels to turn and increase throttle opening to achieve an indicated vehicle speed of 20 mph. Vehicle should be in 3rd gear.

(4) Overdrive clutch pressure should read 74 to 95 psi.

(5) Move selector lever to the (3) position and increase indicated vehicle speed to 30 mph.

(6) The vehicle should be in second gear and overdrive clutch pressure should be less than 5 psi.

(7) This test checks the overdrive clutch hydraulic circuit as well as the shift schedule.

TEST FOUR-SELECTOR IN OVERDRIVE (4th Gear)

(1) Attach gauge to the 2/4 clutch tap.

(2) Move selector lever to the (OD) position.

(3) Allow vehicle front wheels to turn and increase throttle opening to achieve an indicated vehicle speed of 30 mph. Vehicle should be in 4th gear.

(4) The 2/4 clutch pressure should read 75 to 95 psi.

(5) This test checks the 2/4 clutch hydraulic circuit.

TEST FIVE-SELECTOR IN OVERDRIVE (4th Gear-CC on)

(1) Attach gauge to the torque converter clutch off pressure tap.

(2) Move selector lever to the (OD) position.

(3) Allow vehicle wheels to turn and increase throttle opening to achieve an indicated vehicle speed of 50 mph. Vehicle should be in 4th gear, CC on.

CAUTION: Both wheels must turn at the same speed.

(4) Torque converter clutch off pressure should be less than 5 psi.

(5) This test checks the torque converter clutch hydraulic circuit.

TEST SIX-SELECTOR IN REVERSE

(1) Attach gauges to the reverse and LR clutch tap.

(2) Move selector lever to the (R) position.
(3) Read reverse clutch pressure with output stationary (foot on brake) and throttle opened to achieve 1500 rpm.
(4) Reverse and LR clutch pressure should read 165 to 235 psi.
(5) This test checks the reverse clutch hydraulic circuit.

TEST RESULT INDICATIONS

(1) If proper line pressure is found in any one test, the pump and pressure regulator are working properly.
(2) Low pressure in all positions indicates a defective pump, a clogged filter, or a stuck pressure regulator valve.
(3) Clutch circuit leaks are indicated if pressures do not fall within the specified pressure range.
(4) If the overdrive clutch pressure is greater than 5 psi in Step 4 of Test Three, a worn reaction shaft seal ring or a defective solenoid assembly is indicated.
(5) If the underdrive clutch pressure is greater than 5 psi in Step 4 of Test Two A, a defective solenoid assembly or PCM/TCM is the cause.

PRESSURE CHECK SPECIFICATIONS

Gear Selector Position	Actual Gear	Pressure Taps					
		Underdrive Clutch	Overdrive Clutch	Reverse Clutch	Torque Converter Clutch Off	2/4 Clutch	Low/ Reverse Clutch
Park * 0 mph	PARK	0-2	0-5	0-2	60-110	0-2	115-145
REVERSE * 0 mph	REVERSE	0-2	0-7	165-235	50-100	0-2	165-235
NEUTRAL * 0 mph	NEUTRAL	0-2	0-5	0-2	60-110	0-2	115-145
L # 20 mph	FIRST	110-145	0-5	0-2	60-110	0-2	115-145
3 # 30 mph	SECOND	110-145	0-5	0-2	60-110	115-145	0-2
3 # 45 mph	DIRECT	75-95	75-95	0-2	60-90	0-2	0-2
OD # 30 mph	OVERDRIVE	0-2	75-95	0-2	60-90	75-95	0-2
OD # 50 mph	OVERDRIVE WITH TCC	0-2	75-95	0-2	0-5	75-95	0-2

*** Engine speed at 1500 rpm**

 # CAUTION: Both front wheels must be turning at the same speed.

41TE AUTOMATIC TRANSAXLE (Continued)

DIAGNOSIS AND TESTING - CLUTCH AIR PRESSURE TESTS

Inoperative clutches can be located using a series of tests by substituting air pressure for fluid pressure (Fig. 5) (Fig. 6). The clutches may be tested by applying air pressure to their respective passages. The valve body must be removed and Tool 6056 installed. To make air pressure tests, proceed as follows:

NOTE: The compressed air supply must be free of all dirt and moisture. Use a pressure of 30 psi.

Remove oil pan and valve body. See Valve body removal.

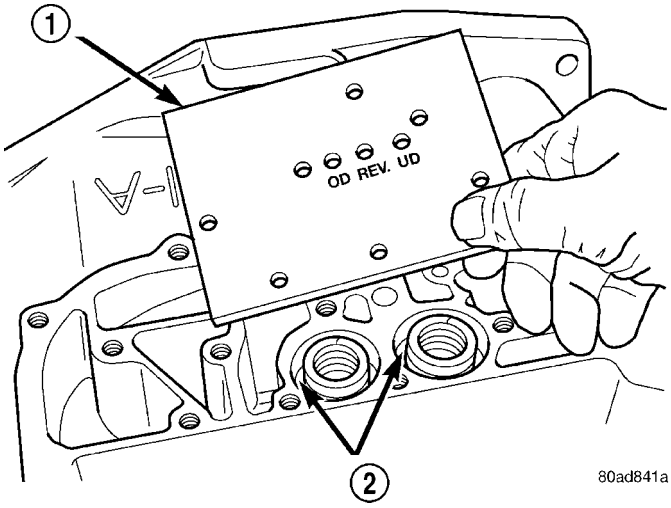

Fig. 5 Air Pressure Test Plate

1 - TOOL 6056
2 - ACCUMULATORS

OVERDRIVE CLUTCH

Apply air pressure to the overdrive clutch apply passage and watch for the push/pull piston to move forward. The piston should return to its starting position when the air pressure is removed.

REVERSE CLUTCH

Apply air pressure to the reverse clutch apply passage and watch for the push/pull piston to move rearward. The piston should return to its starting position when the air pressure is removed.

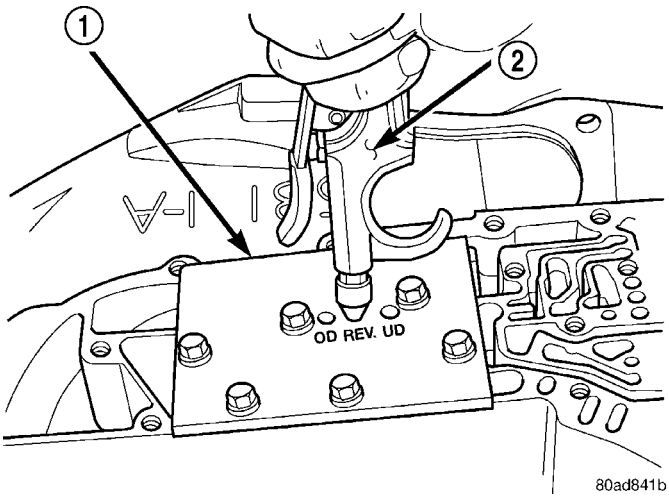

Fig. 6 Testing Reverse Clutch

1 - TOOL 6056
2 - AIR NOZZLE

2/4 CLUTCH

Apply air pressure to the feed hole located on the 2/4 clutch retainer. Look in the area where the 2/4 piston contacts the first separator plate and watch carefully for the 2/4 piston to move rearward. The piston should return to its original position after the air pressure is removed.

LOW/REVERSE CLUTCH

Apply air pressure to the low/reverse clutch feed hole (rear of case, between 2 bolt holes). Then, look in the area where the low/reverse piston contacts the first separator plate. Watch carefully for the piston to move forward. The piston should return to its original position after the air pressure is removed.

UNDERDRIVE CLUTCH

Because this clutch piston cannot be seen, its operation is checked by function. Air pressure is applied to the low/reverse and the 2/4 clutches. This locks the output shaft. Use a piece of rubber hose wrapped around the input shaft and a pair of clamp-on pliers to turn the input shaft. Next apply air pressure to the underdrive clutch. The input shaft should not rotate with hand torque. Release the air pressure and confirm that the input shaft will rotate.

41TE AUTOMATIC TRANSAXLE (Continued)

DIAGNOSIS AND TESTING - TORQUE CONVERTER HOUSING FLUID LEAKAGE

When diagnosing converter housing fluid leaks, three actions must be taken before repair:

(1) Verify proper transmission fluid level.

(2) Verify that the leak originates from the converter housing area and is transmission fluid.

(3) Determine the true source of the leak.

Fluid leakage at or around the torque converter area may originate from an engine oil leak (Fig. 7). The area should be examined closely. Factory fill fluid is red and, therefore, can be distinguished from engine oil.

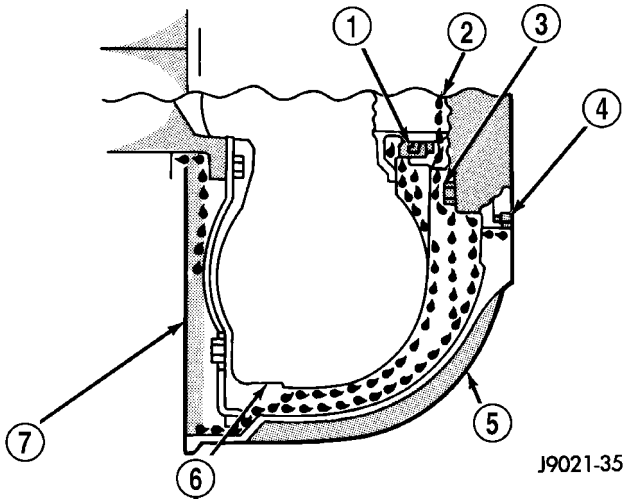

Fig. 7 Converter Housing Leak Paths

1 - PUMP SEAL
2 - PUMP VENT
3 - PUMP BOLT
4 - PUMP GASKET
5 - CONVERTER HOUSING
6 - CONVERTER
7 - REAR MAIN SEAL LEAK

Some suspected converter housing fluid leaks may not be leaks at all. They may only be the result of residual fluid in the converter housing, or excess fluid spilled during factory fill, or fill after repair. Converter housing leaks have several potential sources. Through careful observation, a leak source can be identified before removing the transmission for repair.

Pump seal leaks tend to move along the drive hub and onto the rear of the converter (Fig. 7). Pump o-ring or pump body leaks follow the same path as a seal leak. Pump attaching bolt leaks are generally deposited on the inside of the converter housing and not on the converter itself. Pump seal or gasket leaks usually travel down the inside of the converter housing (Fig. 7).

TORQUE CONVERTER LEAKAGE

Possible sources of torque converter leakage are:

- Torque converter weld leaks at the outside diameter weld (Fig. 8).
- Torque converter hub weld (Fig. 8).

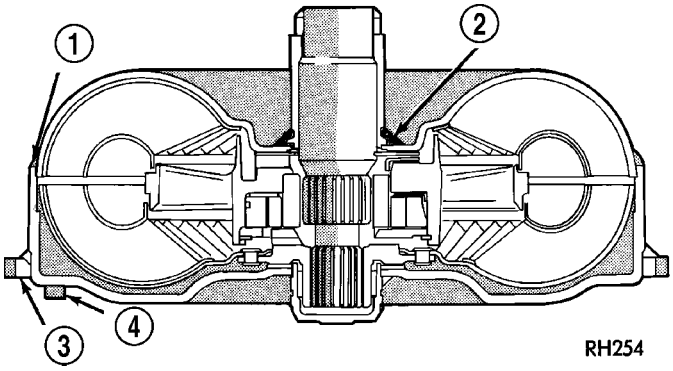

Fig. 8 Converter Leak Points - Typical

1 - OUTSIDE DIAMETER WELD
2 - TORQUE CONVERTER HUB WELD
3 - STARTER RING GEAR
4 - LUG

REMOVAL

NOTE: If transaxle assembly is being replaced or overhauled (clutch and/or seal replacement), it is necessary to perform the "Quick-Learn" Procedure. (Refer to 8 - ELECTRICAL/ELECTRONIC CONTROL MODULES/TRANSMISSION CONTROL MODULE - STANDARD PROCEDURE)

(1) Disconnect battery cables.

(2) Remove battery shield (Fig. 9).

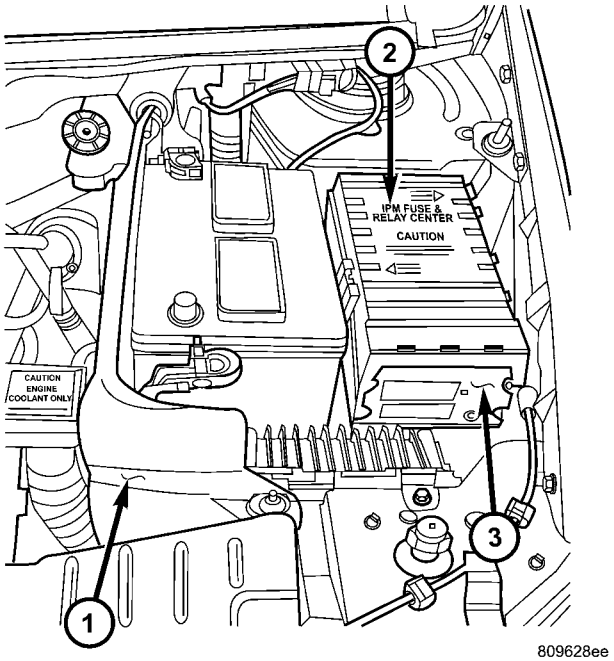

Fig. 9 Battery Thermal Guard

1 - BATTERY THERMOWRAP (IF EQUIPPED)
2 - INTEGRATED POWER MODULE
3 - FRONT CONTROL MODULE

41TE AUTOMATIC TRANSAXLE (Continued)

(3) Remove coolant recovery bottle (Fig. 10).

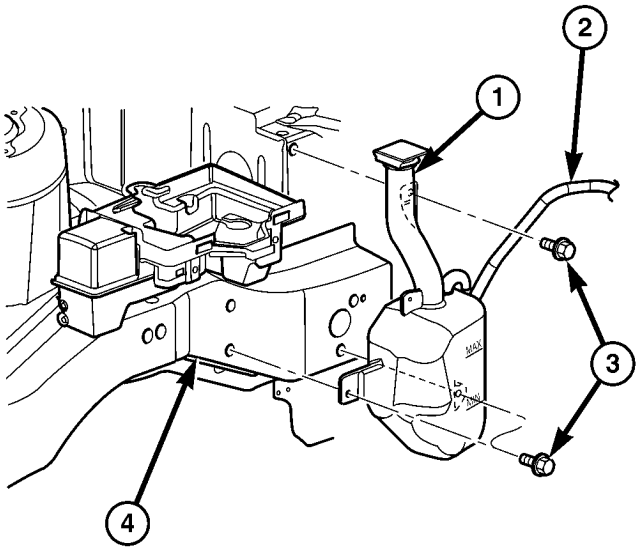

Fig. 10 Coolant Recovery Bottle

1 - COOLANT RECOVERY CONTAINER
2 - HOSE
3 - BOLT
4 - SUB FRAME RAIL

(4) Remove fluid level indicator/tube assembly. Plug opening to prevent debris from entering transaxle.

(5) Disconnect transaxle oil cooler lines using Tool 8875A. (Refer to 7 - COOLING/TRANSMISSION - STANDARD PROCEDURE). Install plugs to prevent debris intrusion.

(6) Disconnect input and output shaft speed sensor connectors (Fig. 11).

(7) Disconnect transmission range sensor (TRS) connector (Fig. 11).

(8) Disconnect solenoid/pressure switch assembly connector (Fig. 11).

(9) Disconnect gear shift cable from manual valve lever and upper mount bracket (Fig. 12).

(10) Disconnect crankshaft position sensor (if equipped). Remove sensor from bellhousing.

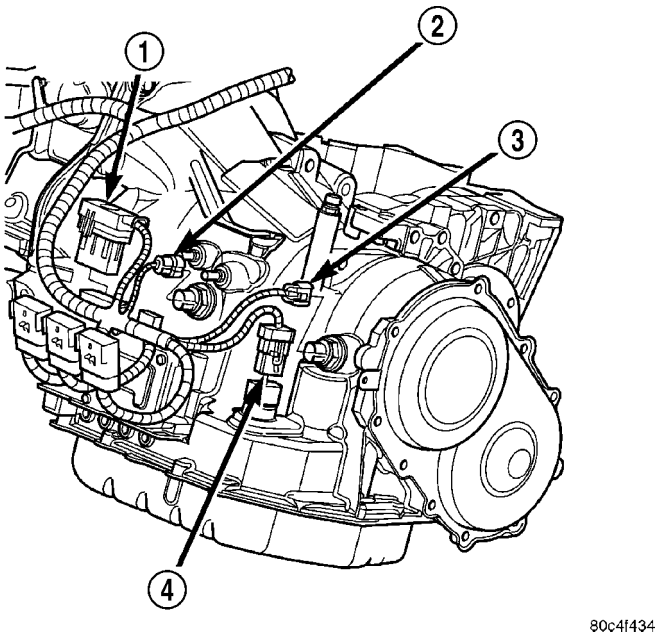

Fig. 11 Component Connector Location—Typical

1 - SOLENOID/PRESSURE SWITCH ASSY. CONNECTOR
2 - INPUT SPEED SENSOR CONNECTOR
3 - OUTPUT SPEED SENSOR CONNECTOR
4 - TRANSMISSION RANGE SENSOR CONNECTOR

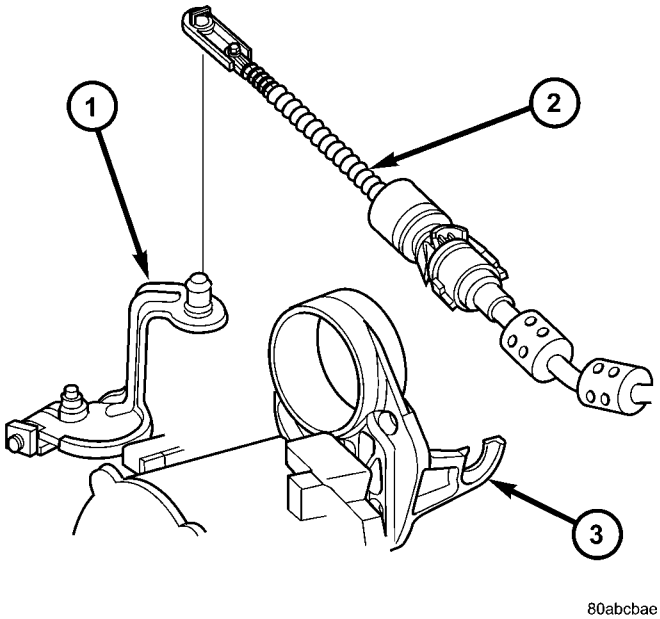

Fig. 12 Gearshift Cable at Transaxle - Typical

1 - MANUAL VALVE LEVER
2 - GEAR SHIFT CABLE
3 - UPPER MOUNT BRACKET

41TE AUTOMATIC TRANSAXLE (Continued)

(11) Reposition leak detection pump harness and hoses.

(12) Remove rear mount bracket-to-transaxle case bolts (Fig. 13).

(13) Remove transaxle upper bellhousing-to-block bolts.

(14) Raise vehicle on hoist.

(15) Remove transaxle oil pan and drain fluid into suitable container.

(16) Remove front wheel/tire assemblies.

(17) Remove left and right halfshaft assemblies. (Refer to 3 - DIFFERENTIAL & DRIVELINE/HALF SHAFT - REMOVAL)

(18) AWD models: Remove power transfer unit. (Refer to 21 - TRANSMISSION/TRANSAXLE/ POWER TRANSFER UNIT - REMOVAL)

(19) Remove rear mount bracket-to-transaxle case lower (horizontal) bolt (Fig. 13).

(20) Remove front mount/bracket assembly.

(21) Remove starter motor.

(22) Remove lateral bending brace.

(23) Remove inspection cover.

(24) Remove torque converter-to-drive plate bolts.

(25) Support engine/transaxle assembly at engine oil pan with screw jack and wood block.

(26) Partially remove left wheelhouse splash shield to gain access to and remove upper mount thru-bolt (Fig. 14).

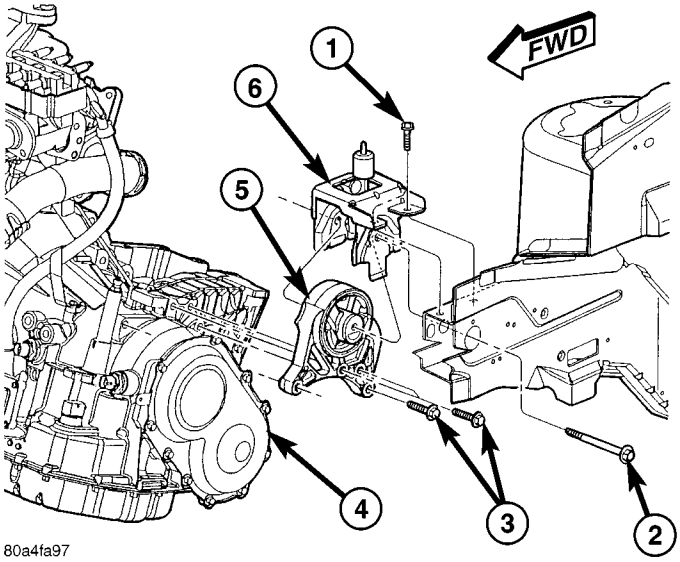

Fig. 14 Left Mount-to-Bracket

1 - BOLT - BRACKET TO FRAME RAIL
2 - BOLT - MOUNT TO RAIL THROUGH
3 - BOLT - LEFT MOUNT TO TRANSAXLE
4 - TRANSAXLE
5 - MOUNT - LEFT
6 - BRACKET - LEFT MOUNT

(27) Lower engine/transaxle assembly with screw jack.

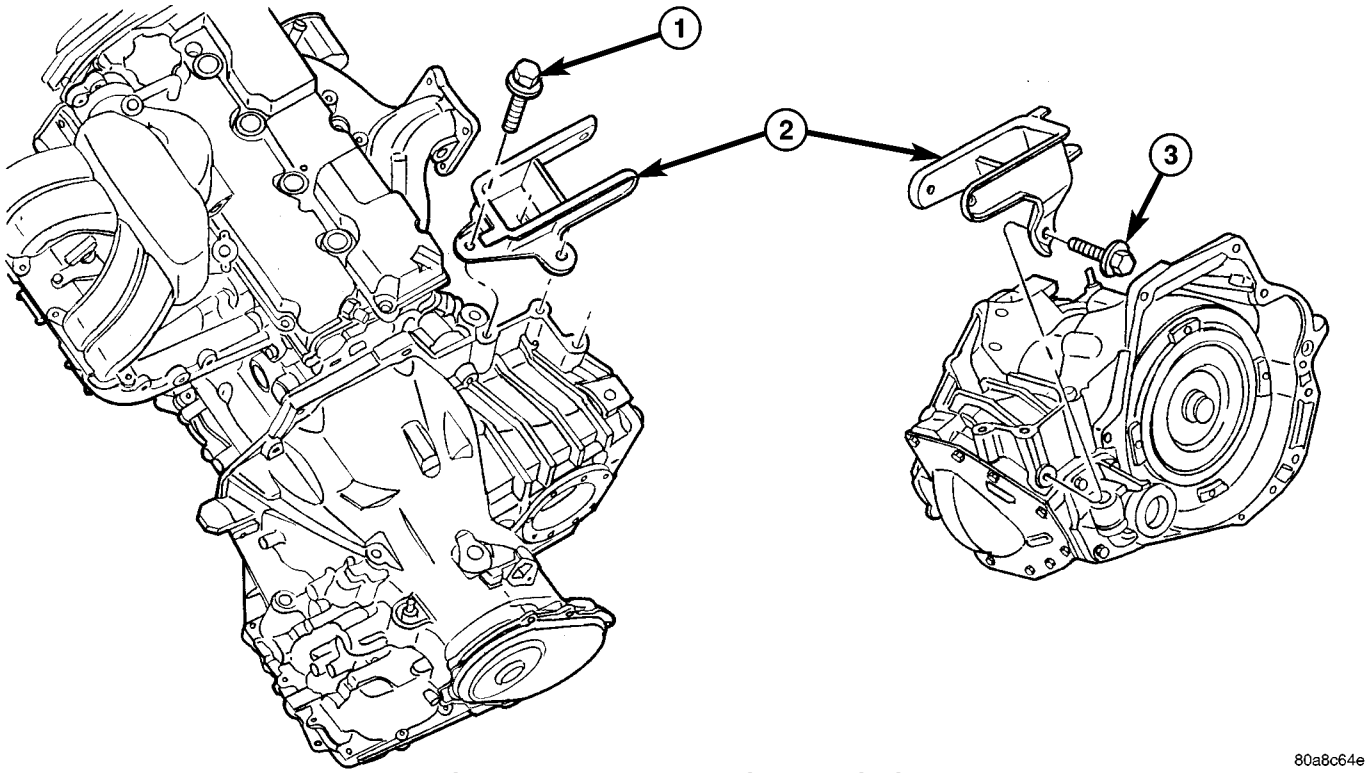

Fig. 13 Rear Mount Bracket - Typical

1 - BOLT - VERTICAL
2 - BRACKET - REAR MOUNT
3 - BOLT - HORIZONTAL

41TE AUTOMATIC TRANSAXLE (Continued)

(28) Obtain helper and/or transmission jack. Secure transmission jack to transaxle assembly.

(29) Remove upper mount bracket from transaxle (Fig. 14).

(30) Remove remaining transaxle bellhousing-to-engine bolts.

(31) Remove transaxle assembly from vehicle.

DISASSEMBLY

NOTE: If transaxle is being overhauled (clutch and/or seal replacement) or replaced, it is necessary to perform the PCM/TCM Quick Learn Procedure. (Refer to 8 - ELECTRICAL/ELECTRONIC CONTROL MODULES/POWERTRAIN/TRANSMISSION CONTROL MODULE - STANDARD PROCEDURE)

NOTE: This procedure does not include final drive (differential) disassembly.

(1) Remove input and output speed sensors.

(2) Remove three (3) solenoid/pressure switch assembly-to-case bolts.

(3) Remove solenoid/pressure switch assembly and gasket (Fig. 15).

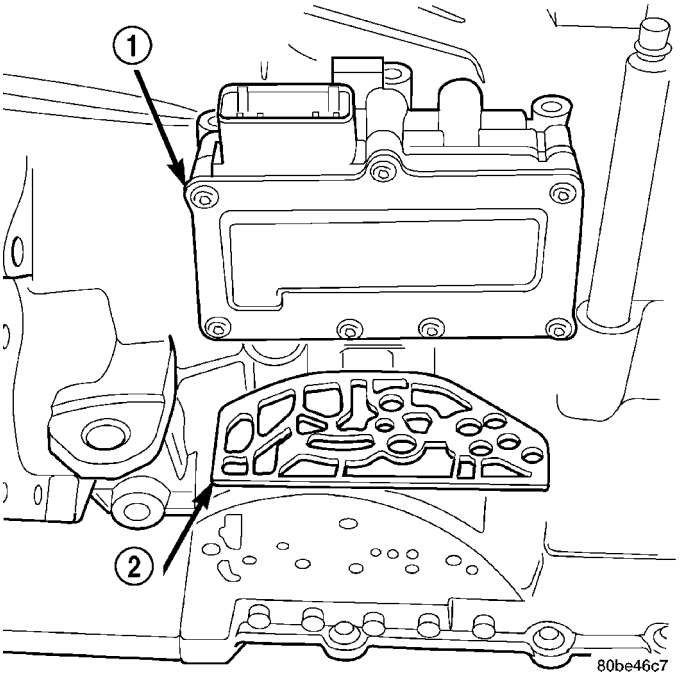

Fig. 15 Solenoid/Pressure Switch Assembly and Gasket

1 - SOLENOID/PRESSURE SWITCH ASSEMBLY
2 - GASKET

(4) Remove oil pan-to-case bolts (Fig. 16).

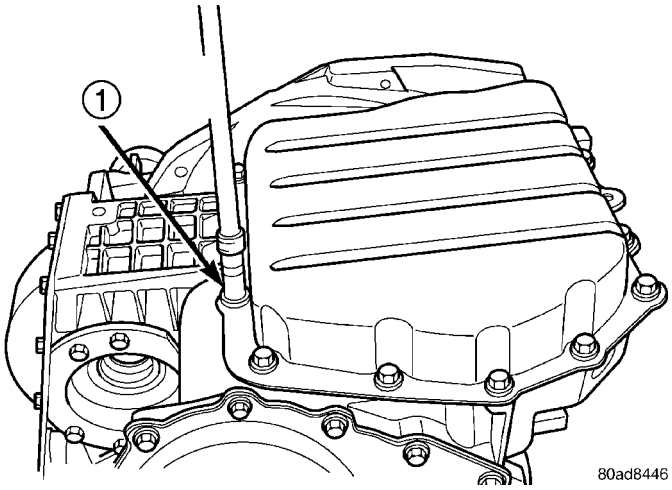

Fig. 16 Remove Oil Pan Bolts

1 - OIL PAN BOLTS (USE RTV UNDER BOLT HEADS)

(5) Remove oil pan (Fig. 17).

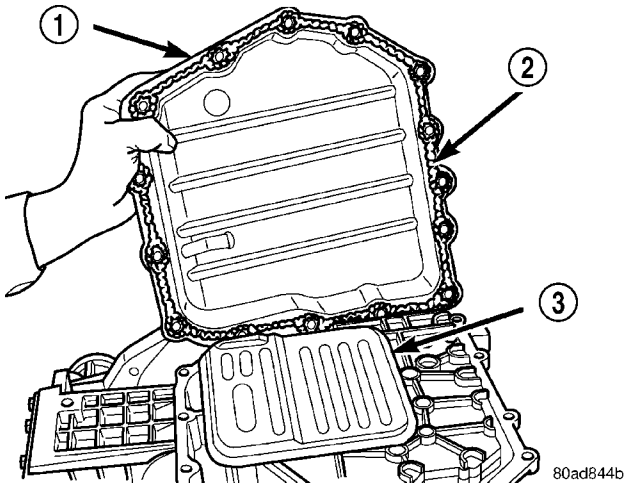

Fig. 17 Remove Oil Pan

1 - OIL PAN
2 - 1/8 INCH BEAD OF MOPAR® ATF RTV (MS-GF41)
3 - OIL FILTER

41TE AUTOMATIC TRANSAXLE (Continued)

(6) Remove oil filter (Fig. 18).

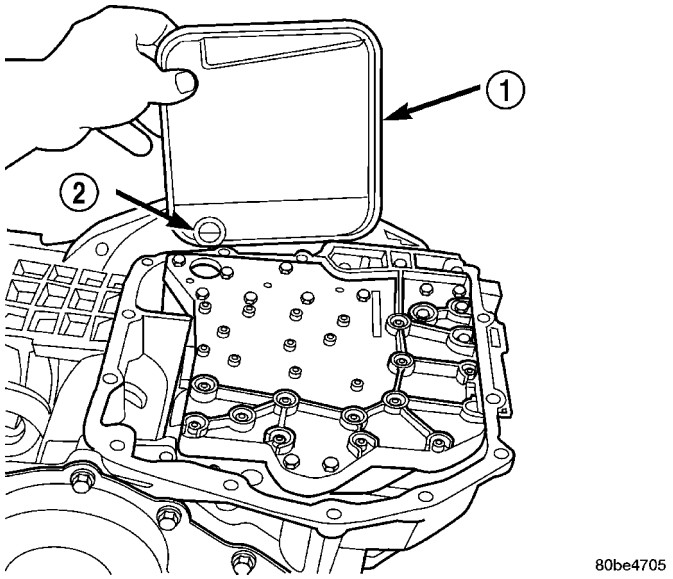

Fig. 18 Remove Oil Filter

1 - OIL FILTER
2 - O-RING

(7) Turn manual valve fully clock-wise to get park rod into position for removal.

(8) Remove valve body-to-case bolts (Fig. 19).

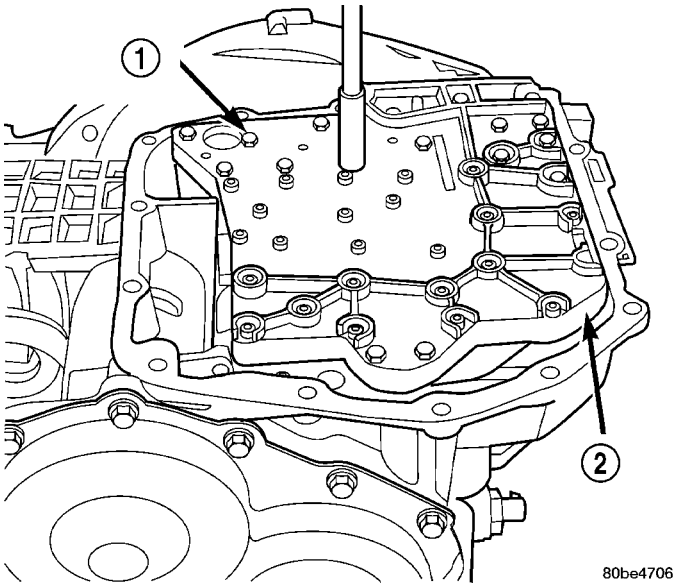

Fig. 19 Remove Valve Body Attaching Bolts

1 - VALVE BODY ATTACHING BOLTS (18)
2 - VALVE BODY

CAUTION: Do not handle the valve body assembly from the manual valve. Damage can result.

(9) Using a screwdriver, push park rod rollers away from guide bracket (Fig. 20) and remove valve body assembly (Fig. 21).

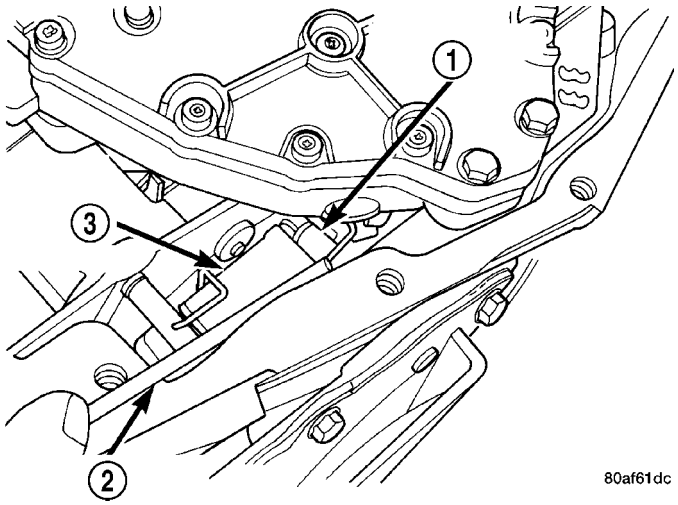

Fig. 20 Push Park Rod Rollers from Guide Bracket

1 - PARK SPRAG ROLLERS
2 - SCREWDRIVER
3 - PARK SPRAG GUIDE BRACKET

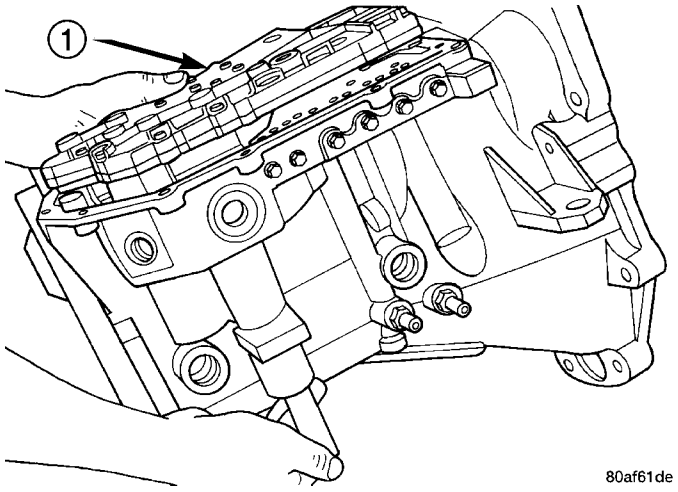

Fig. 21 Remove Valve Body

1 - VALVE BODY

NOTE: Depending on engine application, some accumulators will have two springs and others will have one spring. The springs are color-coded according to application and year. When disassembling, mark accumulator spring location to ease assembly.

41TE AUTOMATIC TRANSAXLE (Continued)

(10) Remove underdrive and overdrive accumulators (Fig. 22).

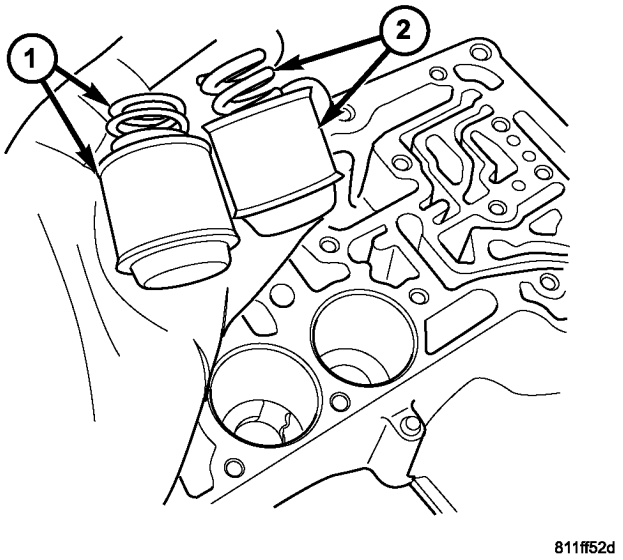

Fig. 22 Underdrive and Overdrive Accumulators

1 - OVERDRIVE PISTON AND SPRING
2 - UNDERDRIVE PISTON AND SPRING

(11) Remove low/reverse accumulator snap ring (Fig. 23).

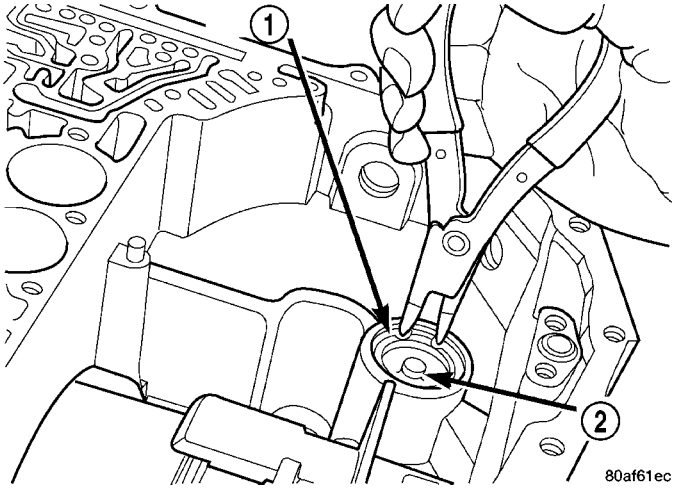

Fig. 23 Remove Low/Reverse Accumulator Snap Ring

1 - SNAP RING
2 - PLUG

(12) Remove low/reverse accumulator plug (Fig. 24).

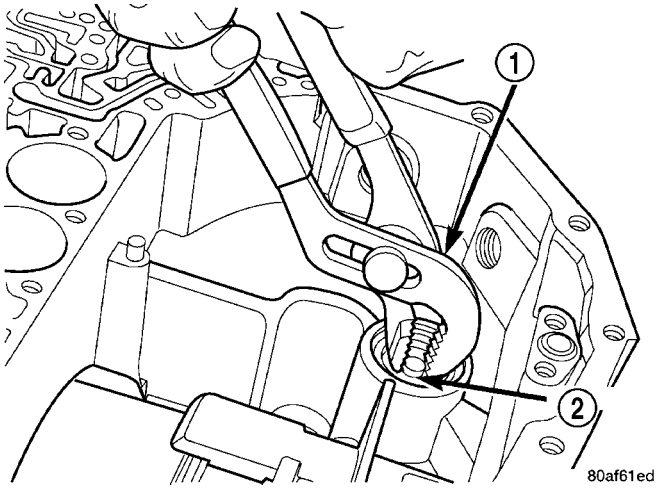

Fig. 24 Remove Low/Reverse Accumulator Plug (Cover)

1 - ADJUSTABLE PLIERS
2 - PLUG

(13) Remove low/reverse accumulator piston using suitable pliers (Fig. 25) (Fig. 26).

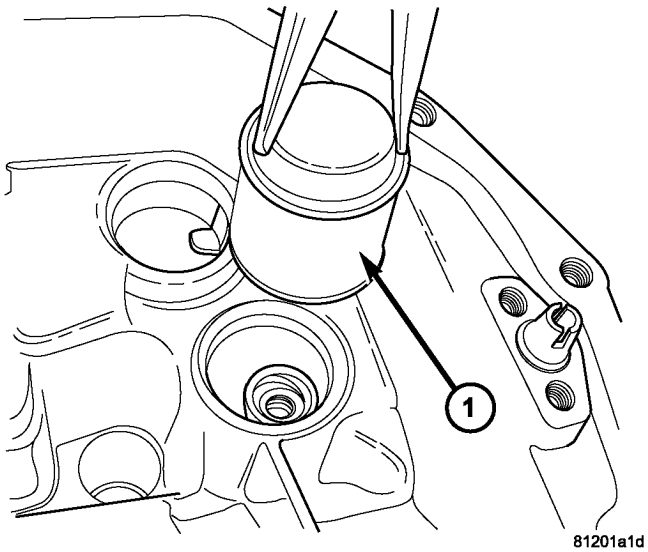

Fig. 25 Low/Reverse Accumulator Piston

1 - ACCUMULATOR PISTON

41TE AUTOMATIC TRANSAXLE (Continued)

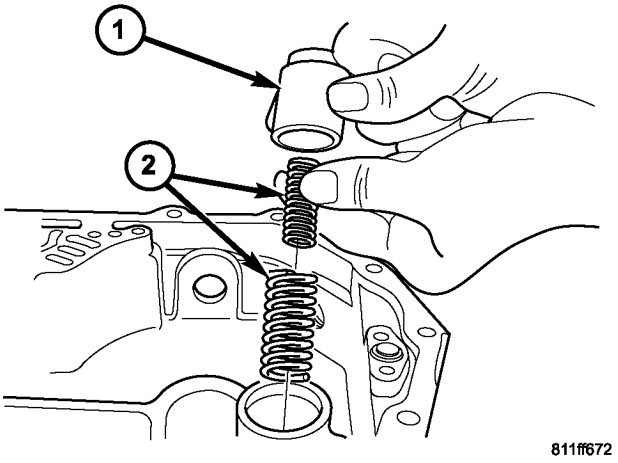

Fig. 26 Low/Reverse Accumulator

1 - PISTON
2 - RETURN SPRINGS

(14) Measure input shaft end play. Place transaxle so input shaft is vertical. Set up end play set and dial indicator as shown in (Fig. 27). **Input shaft end play should be within 0.13-0.64 mm (0.005-0.025 in.)** If outside of this range, a #4 thrust plate change is required. Record indicator reading for reference upon reassembly.

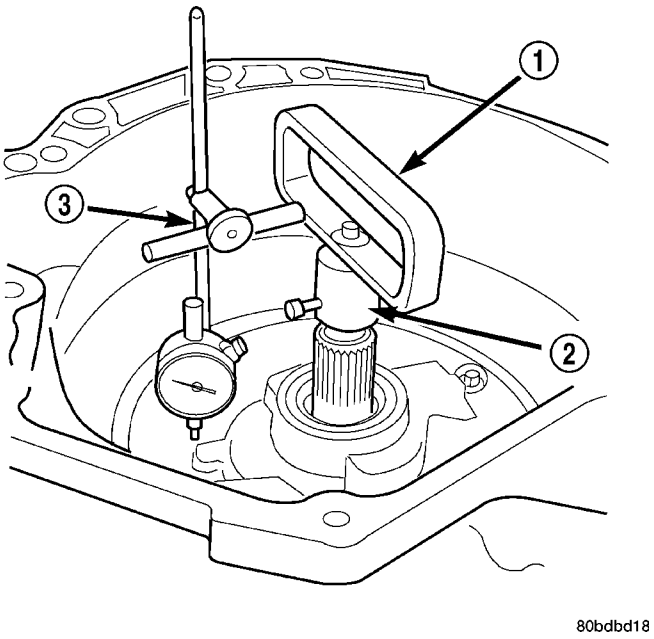

Fig. 27 Measure Input Shaft End Play Using End Play Set 8266

1 - TOOL 8266–8
2 - TOOL 8266–2
3 - TOOL C-3339

(15) Remove oil pump-to-case bolts (Fig. 28).

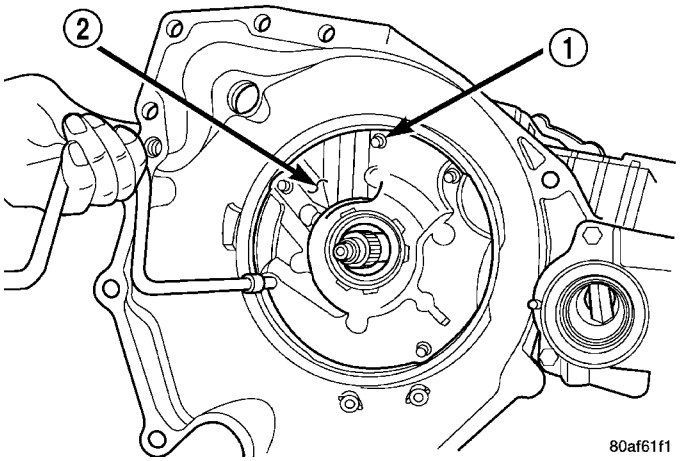

Fig. 28 Remove Pump Attaching Bolts

1 - PUMP ATTACHING BOLTS
2 - PUMP HOUSING

CAUTION: Be sure input speed sensor is removed before removing oil pump.

(16) Install pullers Tool C-3752 as shown in (Fig. 29).

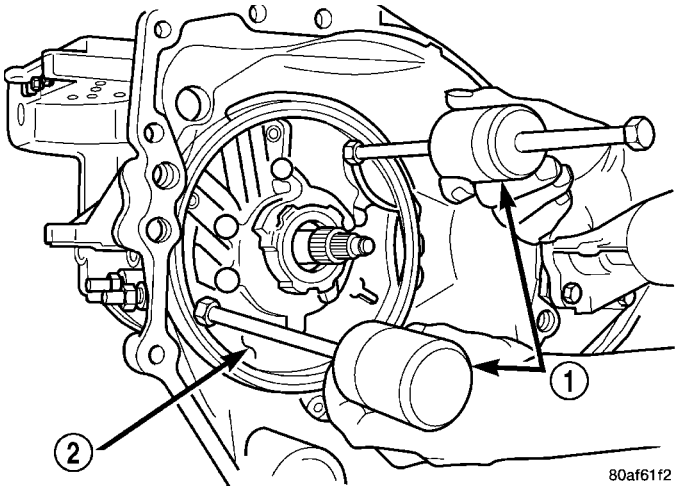

Fig. 29 Install Tool C-3752

1 - PULLERS TOOL C-3752
2 - PUMP

41TE AUTOMATIC TRANSAXLE (Continued)

(17) Remove oil pump assembly (Fig. 30) (Fig. 31).

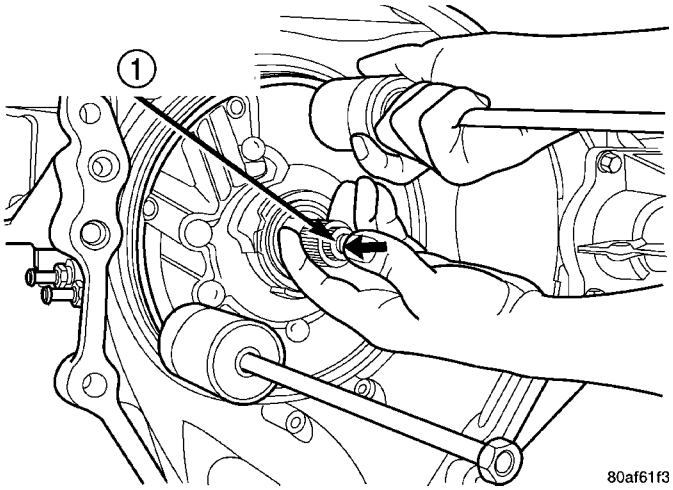

Fig. 30 Remove Oil Pump

1 - "PUSH IN" ON INPUT SHAFT WHILE REMOVING PUMP

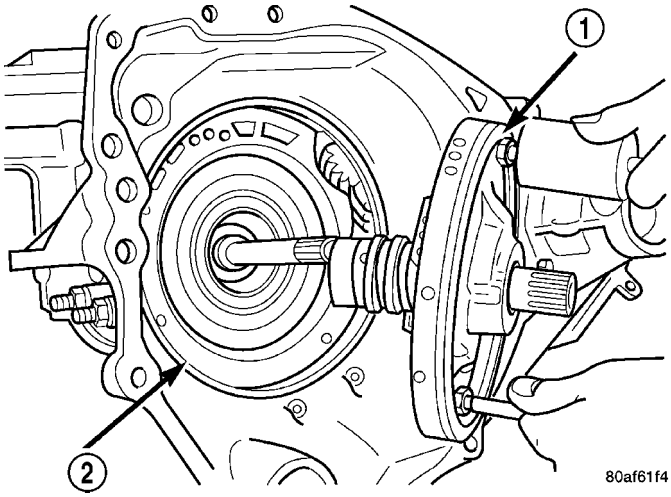

Fig. 31 Oil Pump Removed

1 - OIL PUMP
2 - GASKET

(18) Remove oil pump gasket (Fig. 32).

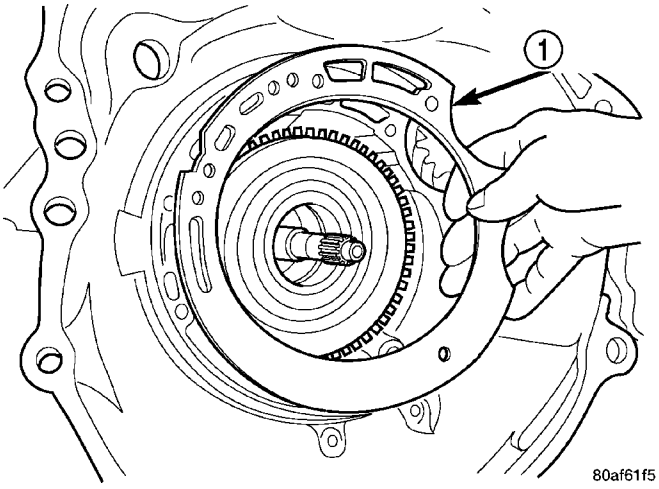

Fig. 32 Remove Oil Pump Gasket

1 - PUMP GASKET

CAUTION: If transaxle failure has occurred, the cooler bypass valve must be replaced. Do not re-use or attempt to clean valve.

(19) Remove cooler bypass valve (Fig. 33).

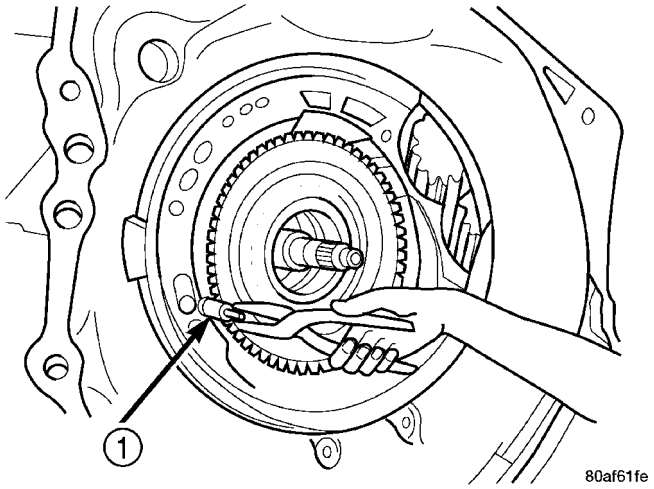

Fig. 33 Remove Bypass Valve

1 - COOLER BYPASS VALVE

41TE AUTOMATIC TRANSAXLE (Continued)

(20) Remove #1 needle bearing (Fig. 34).

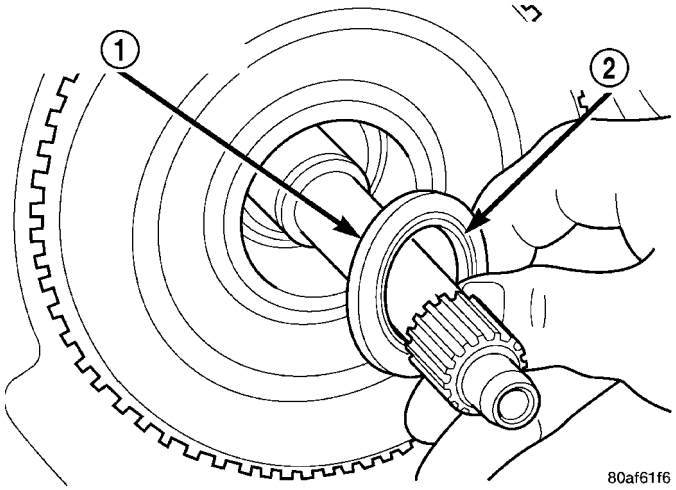

Fig. 34 Remove Caged Needle Bearing

1 - #1 CAGED NEEDLE BEARING
2 - NOTE: TANGED SIDE OUT

(21) Remove input clutch assembly (Fig. 35).

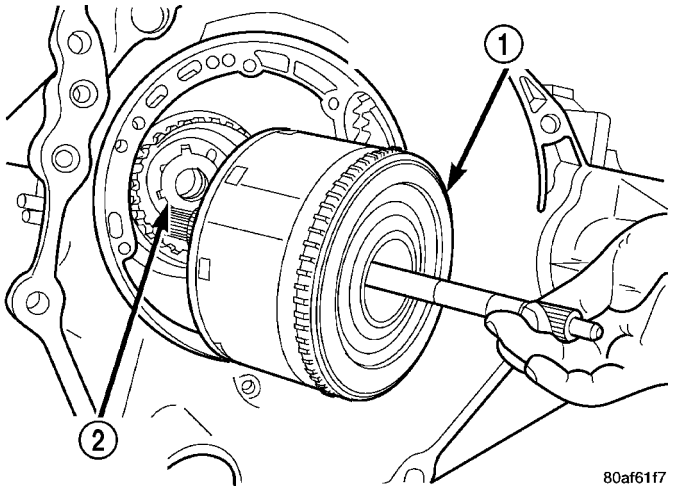

Fig. 35 Remove Input Clutch Assembly

1 - INPUT CLUTCH ASSEMBLY
2 - #4 THRUST WASHER

(22) Remove #4 thrust plate (Fig. 36).

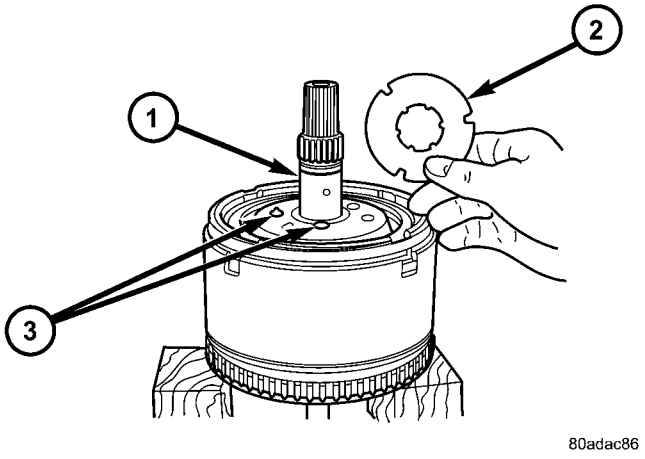

Fig. 36 No. 4 Thrust Plate

1 - OVERDRIVE SHAFT ASSEMBLY
2 - #4 THRUST PLATE (SELECT)
3 - 3 DABS OF PETROLATUM FOR RETENTION

(23) Remove front sun gear assembly and #4 thrust washer (Fig. 37).

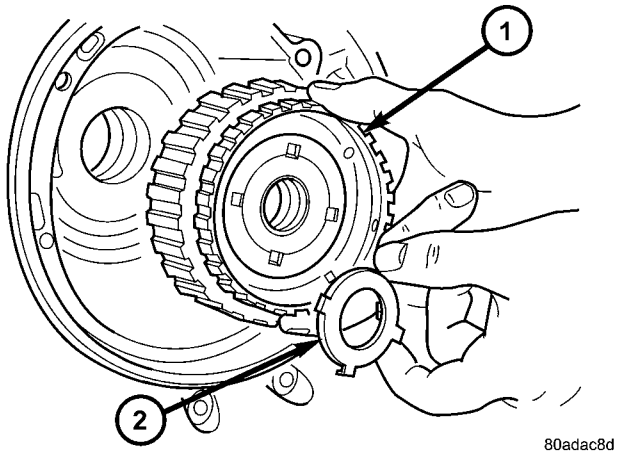

Fig. 37 Remove Front Sun Gear Assembly

1 - FRONT SUN GEAR ASSEMBLY
2 - #4 THRUST WASHER (FOUR TABS)

41TE AUTOMATIC TRANSAXLE (Continued)

(24) Remove front carrier/rear annulus assembly and #6 needle bearing (Fig. 38).

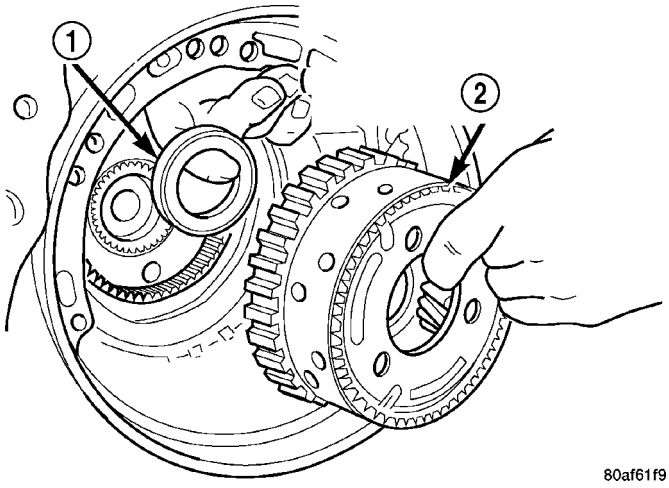

Fig. 38 Remove Front Carrier and Rear Annulus Assembly

1 - #6 NEEDLE BEARING
2 - FRONT CARRIER AND REAR ANNULUS ASSEMBLY (TWIST AND PULL OR PUSH TO REMOVE OR INSTALL).

(25) Remove rear sun gear and #7 needle bearing (Fig. 39).

NOTE: The number 7 needle bearing has three anti-reversal tabs and is common with the number five and number two position. The orientation should allow the bearing to seat flat against the rear sun gear (Fig. 40). A small amount of petrolatum can be used to hold the bearing to the rear sun gear.

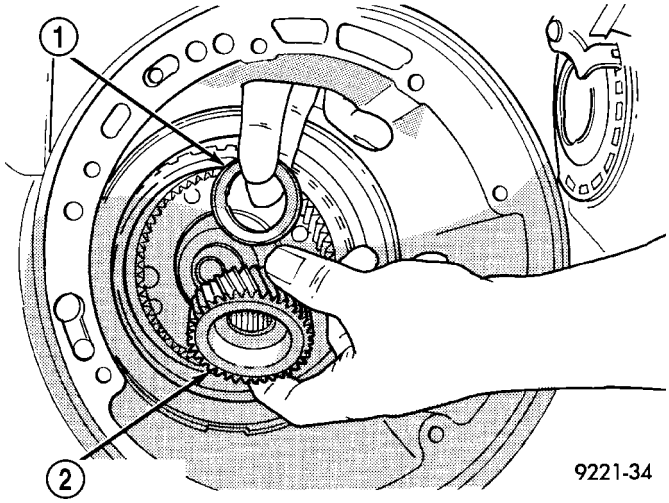

Fig. 39 Remove Rear Sun Gear

1 - #7 NEEDLE BEARING
2 - REAR SUN GEAR

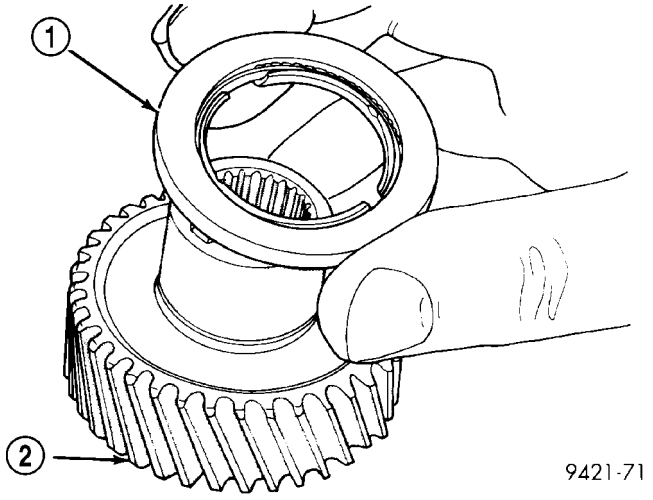

Fig. 40 Number 7 Bearing

1 - #7 NEEDLE BEARING
2 - REAR SUN GEAR

(26) Setup tool 5058 as shown in (Fig. 41). Compress 2/4 clutch return spring (just enough to remove snap ring) and remove snap ring.

NOTE: Verify that Tool 5058 is centered properly over the 2/4 clutch retainer before compressing. If necessary, fasten the 5058 bar to the bellhousing flange with any combination of locking pliers and bolts to center the tool properly.

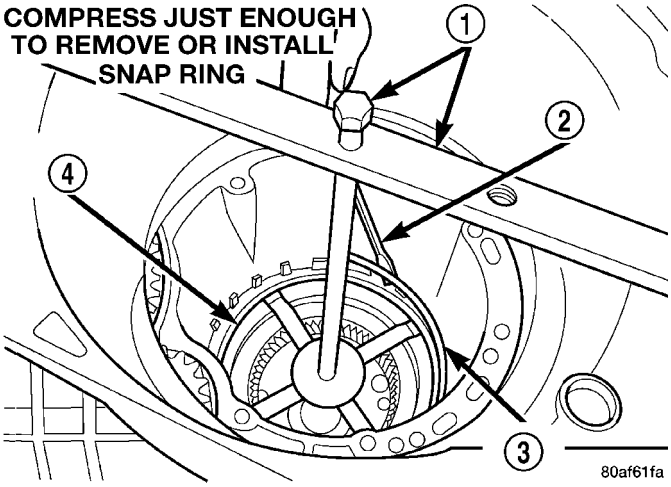

Fig. 41 Remove 2/4 Clutch Retainer Snap Ring

1 - TOOL 5058
2 - SCREWDRIVER
3 - SNAP RING
4 - 2/4 CLUTCH RETAINER

41TE AUTOMATIC TRANSAXLE (Continued)

NOTE: The 2/4 Clutch Piston has bonded seals which are not individually serviceable. Seal replacement requires replacement of the piston assembly.

(27) Remove 2/4 clutch retainer (Fig. 42).

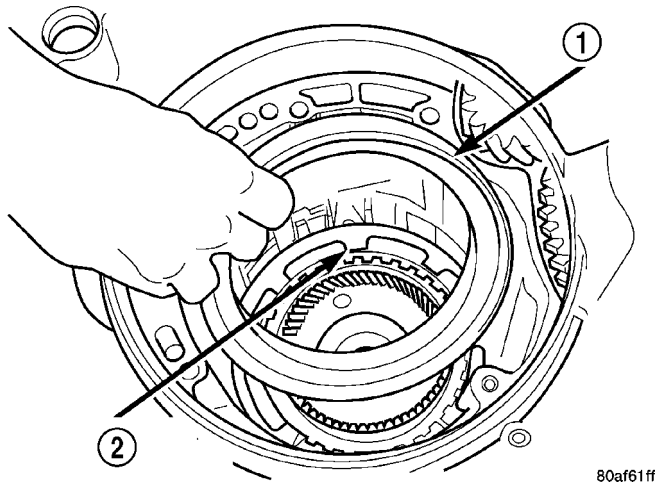

Fig. 42 2/4 Clutch Retainer

1 - 2/4 CLUTCH RETAINER
2 - 2/4 CLUTCH RETURN SPRING

(28) Remove 2/4 clutch return spring (Fig. 43).

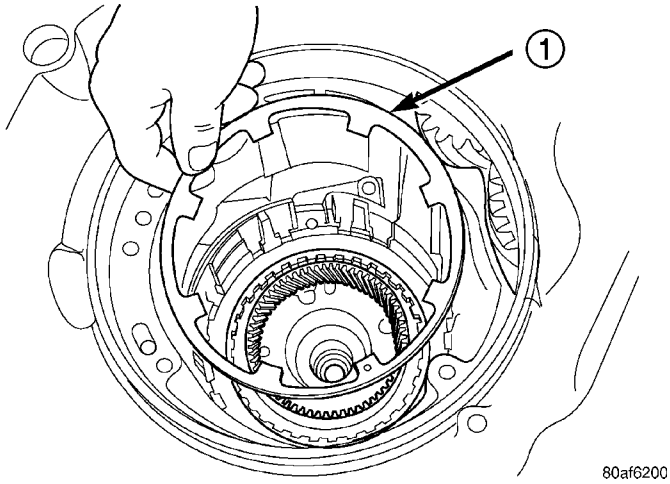

Fig. 43 Remove 2/4 Clutch Return Spring

1 - 2/4 CLUTCH RETURN SPRING

(29) Remove 2/4 clutch pack (Fig. 44). **Tag 2/4 clutch pack for reassembly identification.**

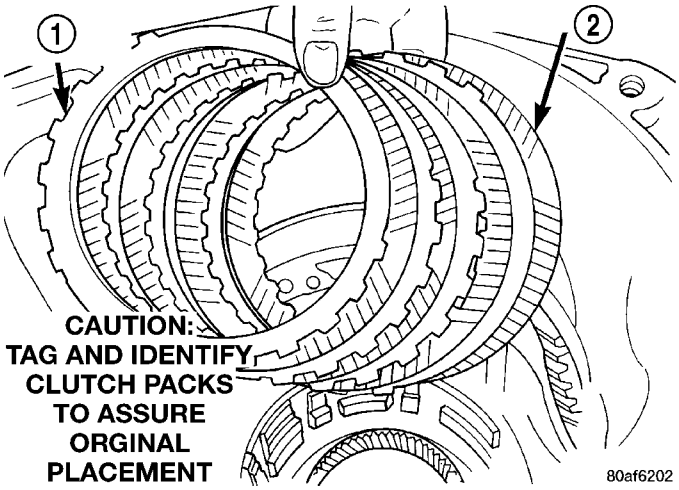

Fig. 44 Remove 2/4 Clutch Pack

1 - CLUTCH PLATE (4)
2 - CLUTCH DISC (4)

(30) Remove tapered snap ring (Fig. 45).

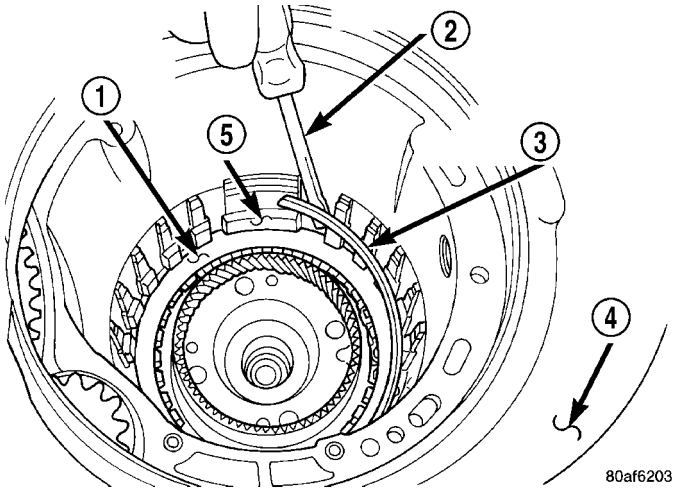

Fig. 45 Remove Tapered Snap Ring

1 - LOW/REVERSE CLUTCH REACTION PLATE
2 - SCREWDRIVER
3 - LOW/REVERSE TAPERED SNAP RING (TAPERED SIDE UP)
4 - OIL PAN FACE
5 - LONG TAB

41TE AUTOMATIC TRANSAXLE (Continued)

(31) Remove low/reverse reaction plate (Fig. 46).

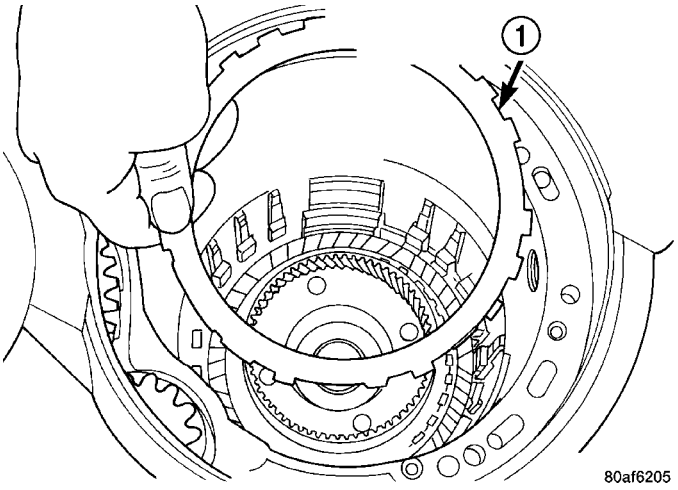

Fig. 46 Remove Low/Reverse Reaction Plate

1 - LOW/REVERSE REACTION PLATE (FLAT SIDE UP)

(32) Remove one low/reverse clutch disc (Fig. 47).

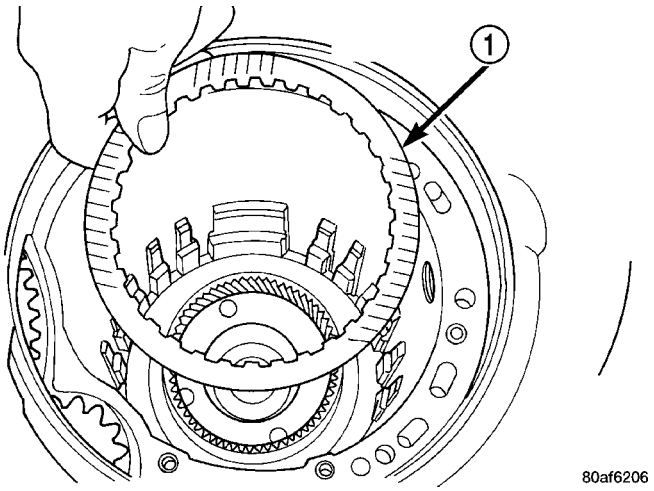

Fig. 47 Remove One Disc

1 - ONE DISC FROM LOW/REVERSE CLUTCH

(33) Remove low/reverse reaction plate snap ring (Fig. 48).

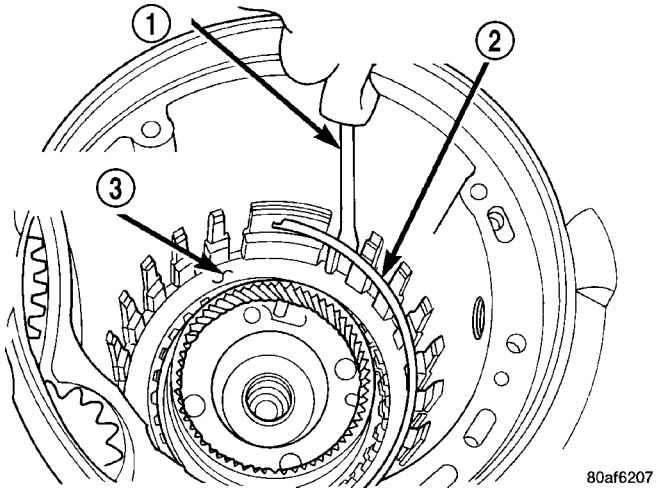

Fig. 48 Remove Low/Reverse Reaction Plate Snap Ring

1 - SCREWDRIVER
2 - LOW/REVERSE REACTION PLATE FLAT SNAP RING
3 - DO NOT SCRATCH CLUTCH PLATE

(34) Remove low/reverse clutch pack (Fig. 49).

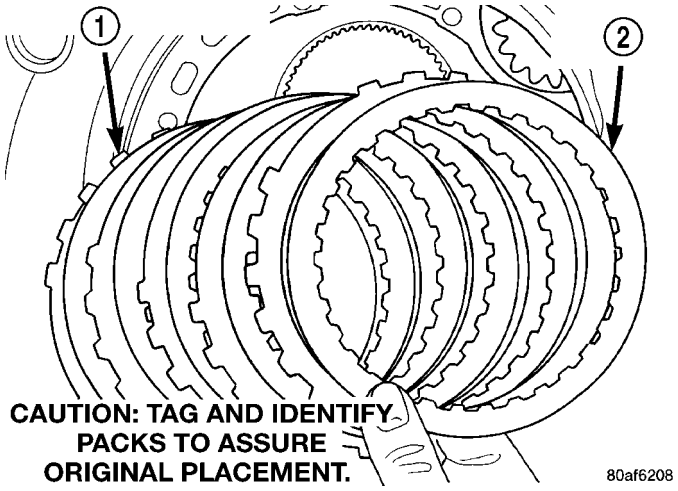

Fig. 49 Remove Low/Reverse Clutch Pack

1 - CLUTCH PLATES (5)
2 - CLUTCH DISCS (5)

41TE AUTOMATIC TRANSAXLE (Continued)

(35) Remove transfer gear cover-to-case bolts (Fig. 50).

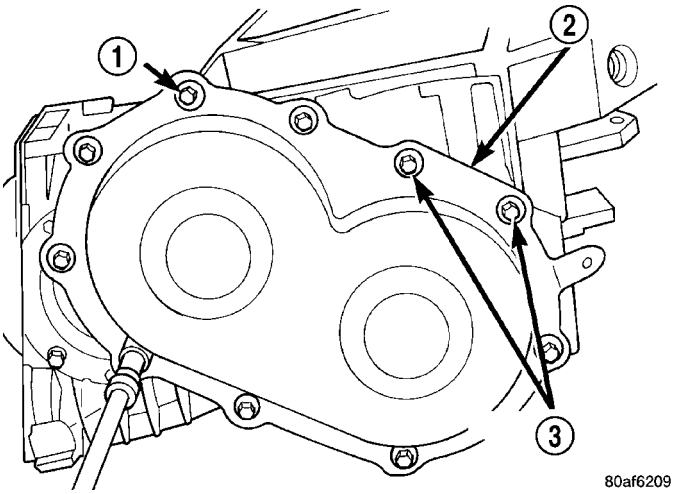

Fig. 50 Remove Rear Cover Bolts

1 - REAR COVER BOLTS
2 - REAR COVER
3 - USE SEALANT ON BOLTS

(36) Remove transfer gear cover (Fig. 51).

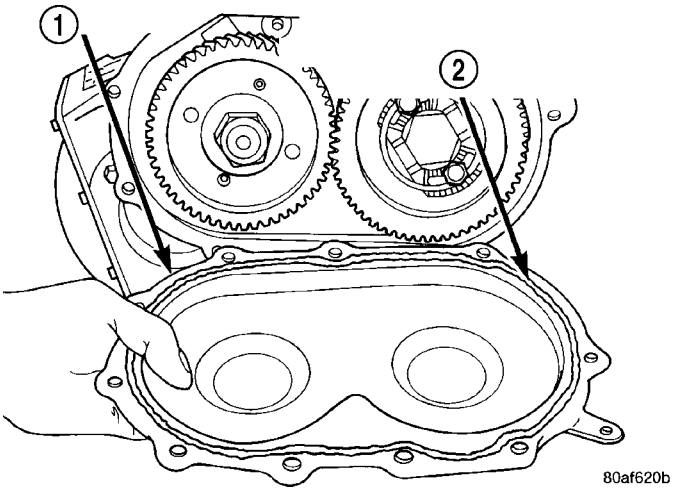

Fig. 51 Remove Rear Cover

1 - REAR COVER
2 - 1/8 INCH BEAD OF MOPAR® ATF RTV (MS-GF41) AS SHOWN

(37) Using Tool 6259, remove transfer shaft gear-to-shaft nut and coned washer (Fig. 52) (Fig. 53).

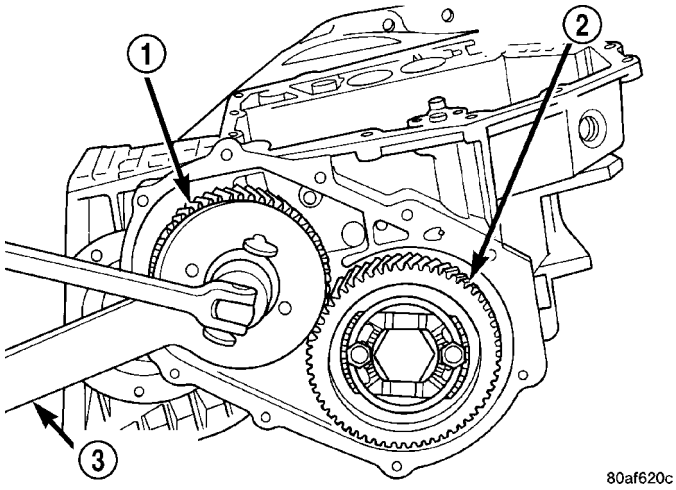

Fig. 52 Remove Transfer Shaft Gear Nut

1 - TRANSFER SHAFT GEAR
2 - OUTPUT GEAR
3 - SPECIAL TOOL 6259

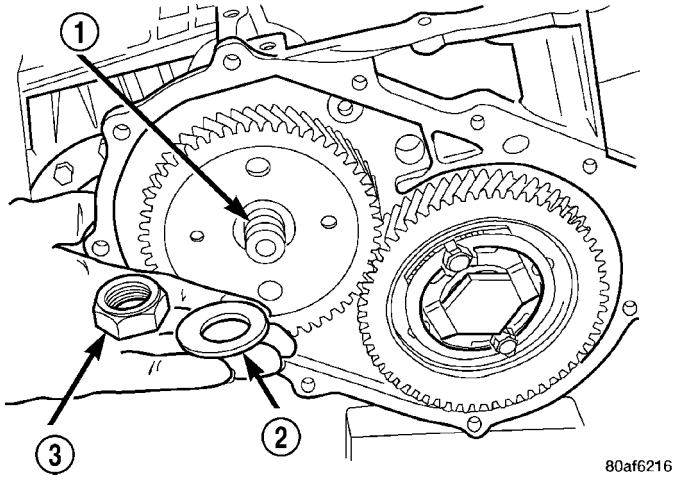

Fig. 53 Transfer Shaft Gear Nut and Coned Washer

1 - TRANSFER SHAFT
2 - LOCK WASHER
3 - NUT

41TE AUTOMATIC TRANSAXLE (Continued)

(38) Using tool L-4407A, remove transfer shaft gear (Fig. 54).

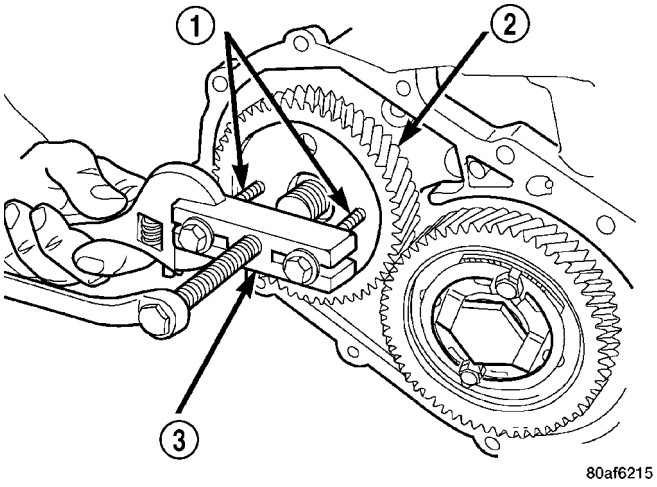

Fig. 54 Remove Transfer Shaft Gear

1 - SPECIAL TOOL L4407-6
2 - TRANSFER SHAFT GEAR
3 - SPECIAL TOOL L4407A

(39) Remove transfer gear shim (select) (Fig. 55).

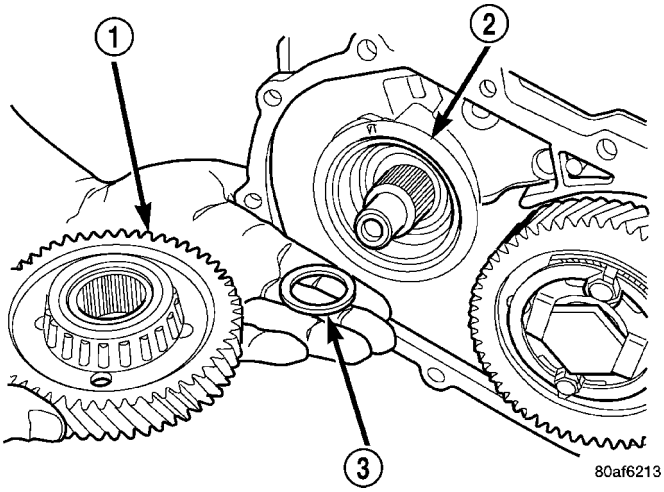

Fig. 55 Remove Transfer Shaft Gear and (Select) Shim

1 - TRANSFER SHAFT GEAR
2 - BEARING CUP RETAINER
3 - SHIM (SELECT)

(40) Remove bearing cup retainer (Fig. 56).

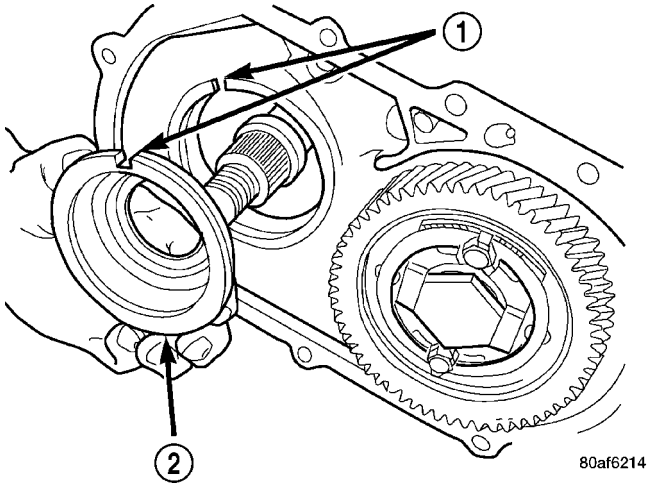

Fig. 56 Remove Bearing Cup Retainer

1 - ALIGN INDEXING TAB TO SLOT
2 - BEARING CUP RETAINER

(41) Remove transfer gear bearing cone using setup shown in (Fig. 57).

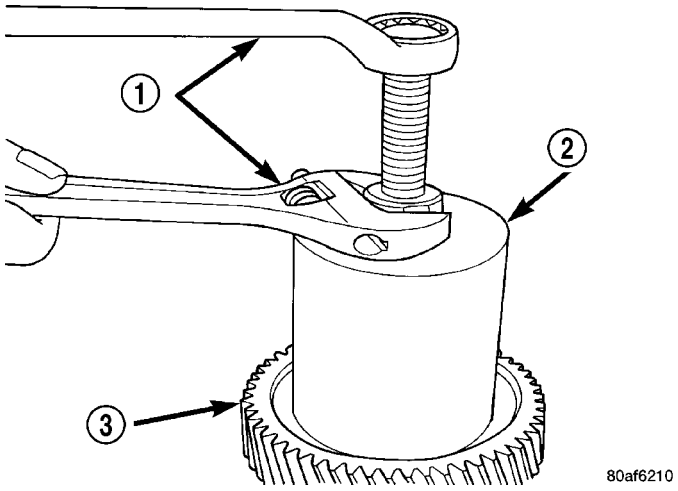

Fig. 57 Remove Transfer Gear Bearing Cone

1 - WRENCHES
2 - TOOL 5048 WITH JAWS TOOL 5048–4 AND BUTTON TOOL L-4539–2
3 - TRANSFER SHAFT GEAR

41TE AUTOMATIC TRANSAXLE (Continued)

(42) Remove transfer shaft bearing cup from retainer using Tool 6062 (Fig. 58).

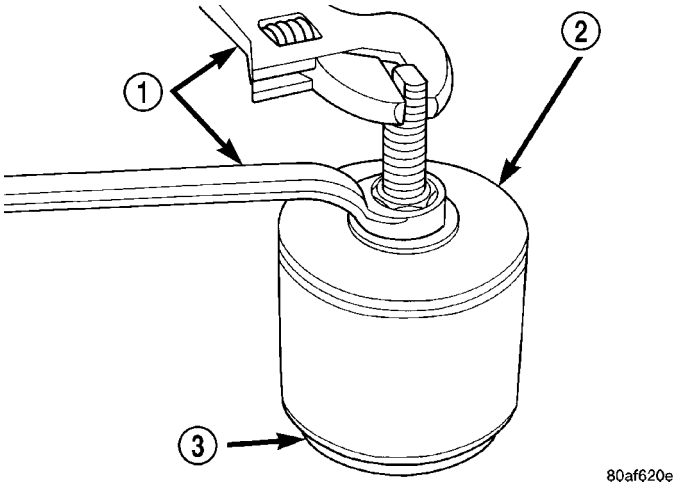

Fig. 58 Remove Transfer Shaft Bearing Cup

1 - WRENCHES
2 - TOOL 6062
3 - TRANSFER SHAFT BEARING CUP RETAINER

(43) Using Tool 6051, remove transfer shaft bearing snap ring (Fig. 59).

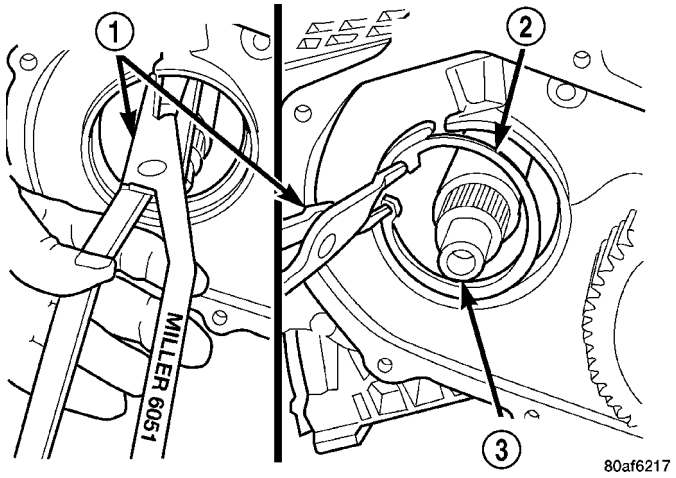

Fig. 59 Remove Transfer Shaft Bearing Snap Ring

1 - SNAP RING PLIERS TOOL 6051
2 - TRANSFER SHAFT BEARING SNAP RING
3 - TRANSFER SHAFT

(44) Using tool 5049A, remove transfer shaft from transaxle (Fig. 60).

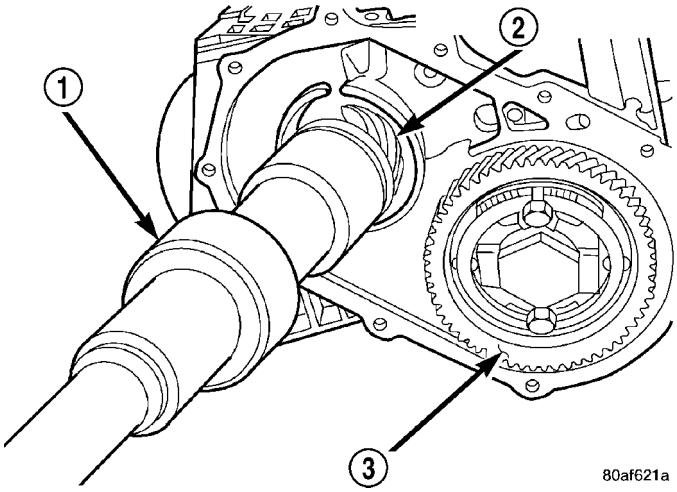

Fig. 60 Remove Transfer Shaft

1 - SPECIAL TOOL 5049–A
2 - TRANSFER SHAFT
3 - OUTPUT GEAR

(45) Slip bearing cup retainer and oil baffle off of shaft (Fig. 61).

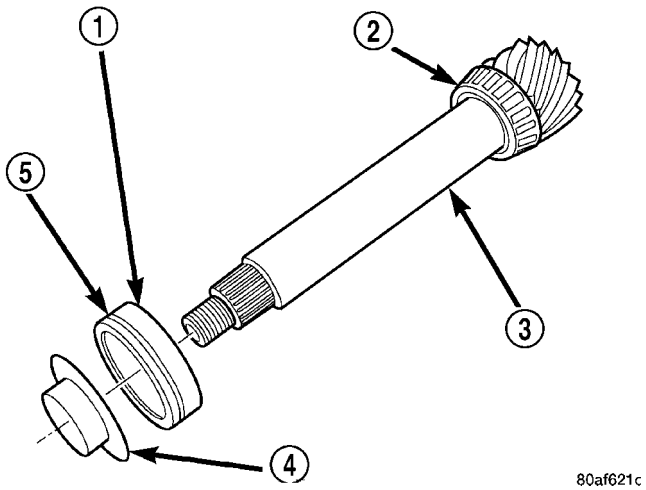

Fig. 61 Bearing Cup Removed

1 - BEARING CUP
2 - BEARING CONE
3 - TRANSFER SHAFT
4 - OIL BAFFLE
5 - O-RING

41TE AUTOMATIC TRANSAXLE (Continued)

(46) Using tool P-334, press transfer shaft bearing cone off of shaft (Fig. 62).

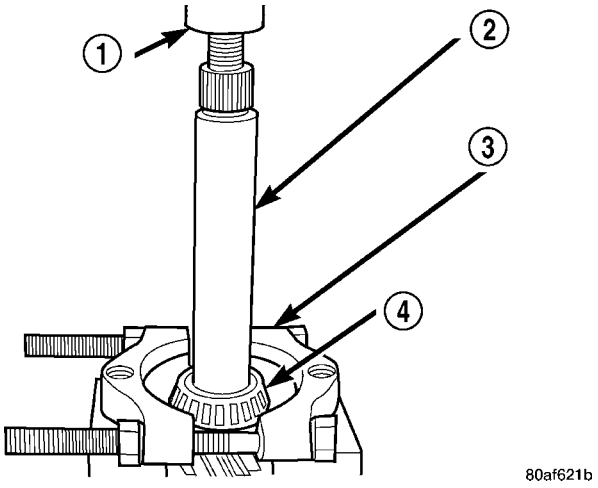

Fig. 62 Remove Transfer Shaft Bearing Cone

1 - ARBOR PRESS RAM
2 - TRANSFER SHAFT
3 - TOOL P-334
4 - BEARING CONE

(47) Bend output gear retaining strap ears flat to allow bolt removal.

(48) Remove output shaft stirrup strap bolts (Fig. 63).

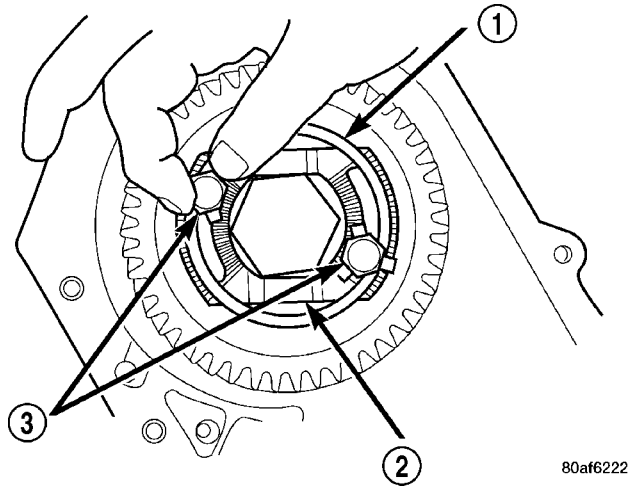

Fig. 63 Remove Strap Bolts

1 - RETAINING STRAP
2 - STIRRUP
3 - RETAINING STRAP BOLTS

(49) Remove stirrup and strap (Fig. 64).

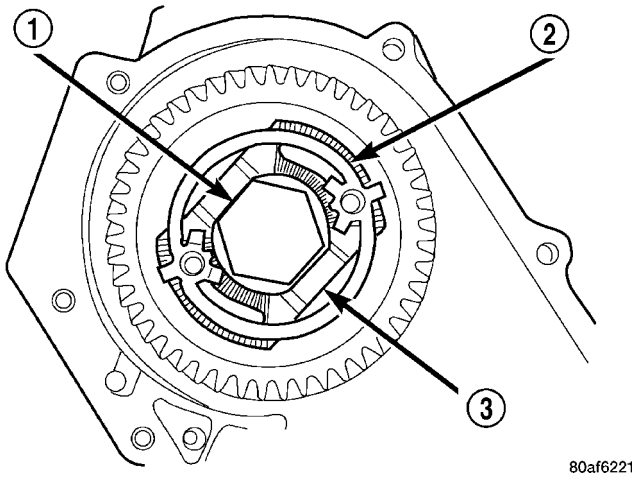

Fig. 64 Remove Stirrup Strap

1 - OUTPUT GEARBOLT
2 - RETAINING STRAP
3 - STIRRUP

(50) Using Tool 6259 (Fig. 65), remove output shaft gear-to-shaft bolt and washer (Fig. 66).

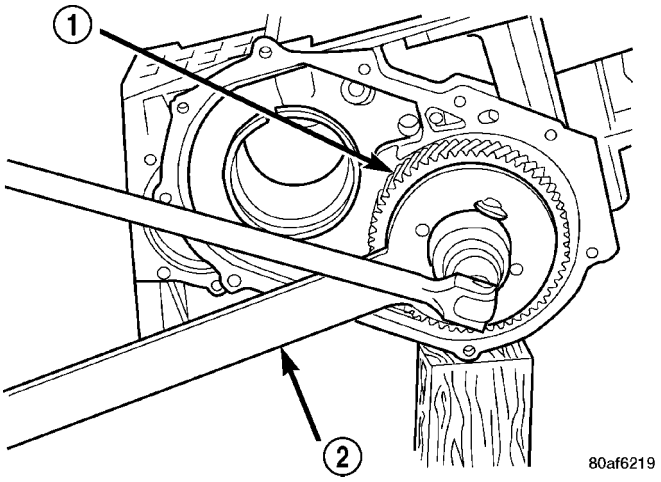

Fig. 65 Remove Output Gear Bolt

1 - OUTPUT GEAR
2 - TOOL 6259

41TE AUTOMATIC TRANSAXLE (Continued)

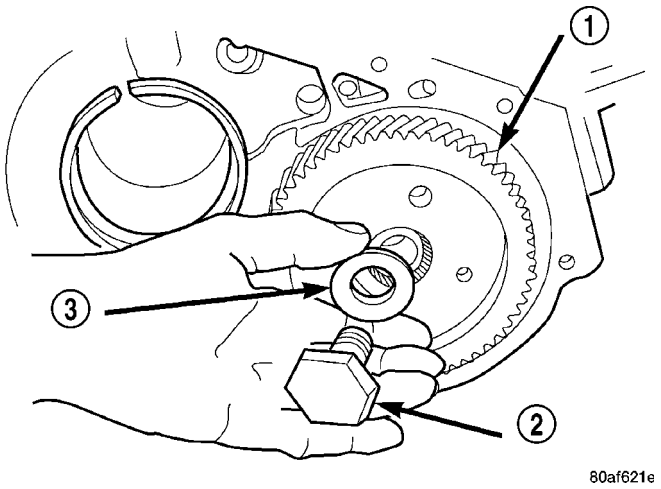

Fig. 66 Output Gear Bolt and Washer

1 - OUTPUT GEAR
2 - BOLT
3 - CONED LOCK WASHER

(51) Using Tool L4407A, and button 6055, remove output gear from shaft (Fig. 67).

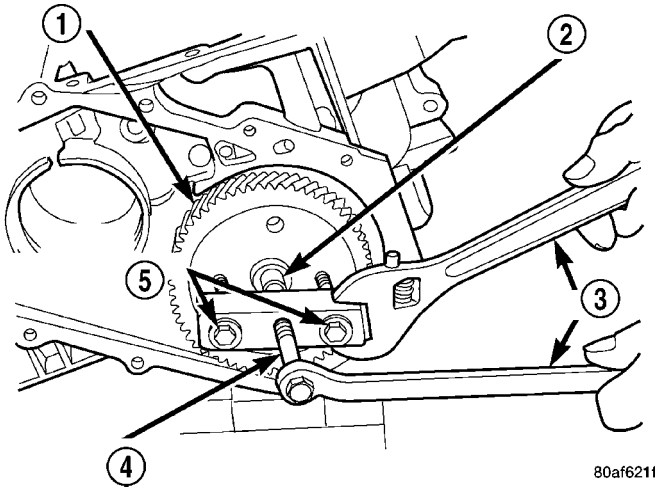

Fig. 67 Remove Output Gear

1 - OUTPUT GEAR
2 - BUTTON TOOL 6055
3 - WRENCHES
4 - TOOL L4407A
5 - BOLTS TOOL L4407–6

(52) Remove output gear bearing shim (select) (Fig. 68).

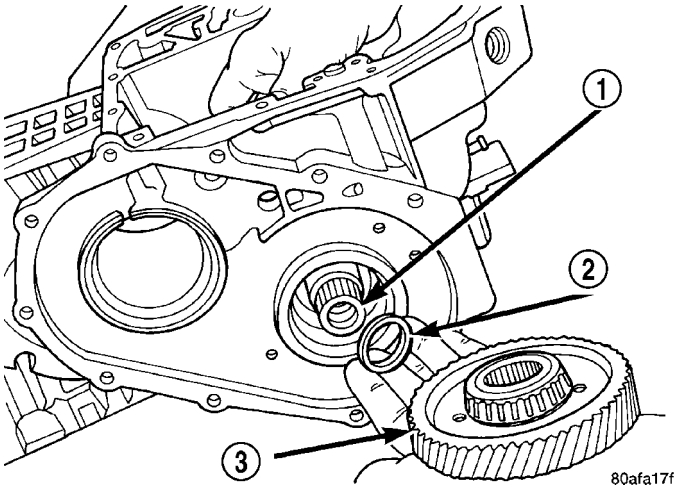

Fig. 68 Output Gear and (Select) Shim

1 - REAR CARRIER ASSEMBLY
2 - SHIM (SELECT)
3 - OUTPUT GEAR

(53) Using setup as shown in (Fig. 69), remove output gear bearing cone.

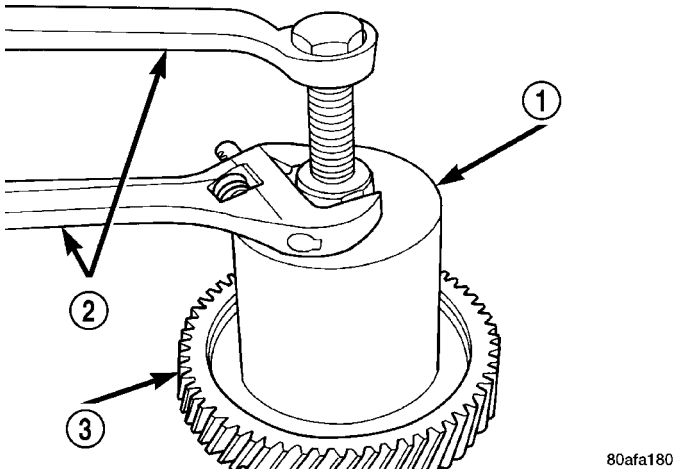

Fig. 69 Remove Bearing Cone

1 - TOOL 5048 WITH JAWS 5048–5 AND BUTTON L-4539–2
2 - WRENCHES
3 - OUTPUT GEAR

41TE AUTOMATIC TRANSAXLE (Continued)

(54) Remove rear carrier assembly from transaxle (Fig. 70).

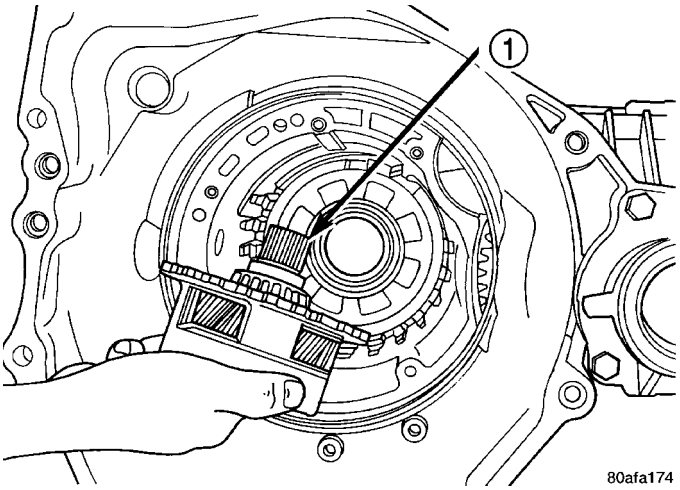

Fig. 70 Remove Rear Carrier Assembly

1 - REAR CARRIER ASSEMBLY

(55) Remove rear carrier assembly bearing cone using setup shown in (Fig. 71).

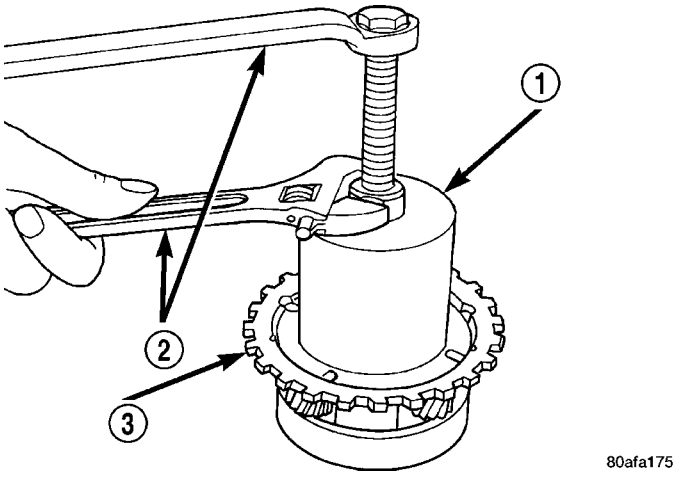

Fig. 71 Remove Rear Carrier Bearing Cone

1 - TOOL 5048 WITH JAWS 5048–3 AND BUTTON 6055
2 - WRENCHES
3 - REAR CARRIER ASSEMBLY

(56) Install low/reverse spring compressor tool as shown in (Fig. 72) (Fig. 73).

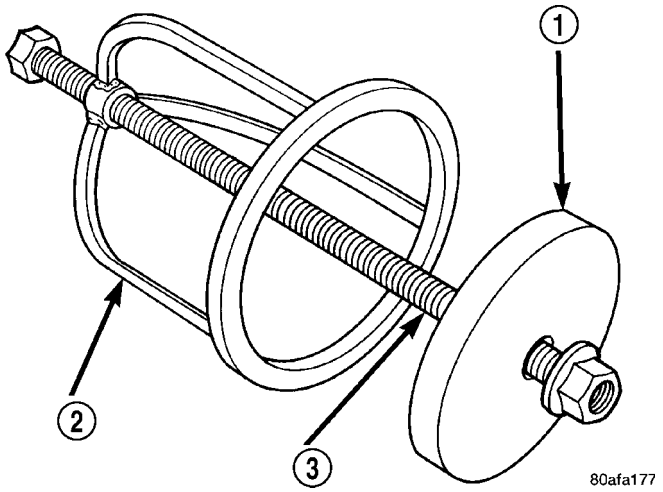

Fig. 72 Low/Reverse Spring Compressor Tool

1 - TOOL 6057
2 - TOOL 5059
3 - TOOL 5058–3

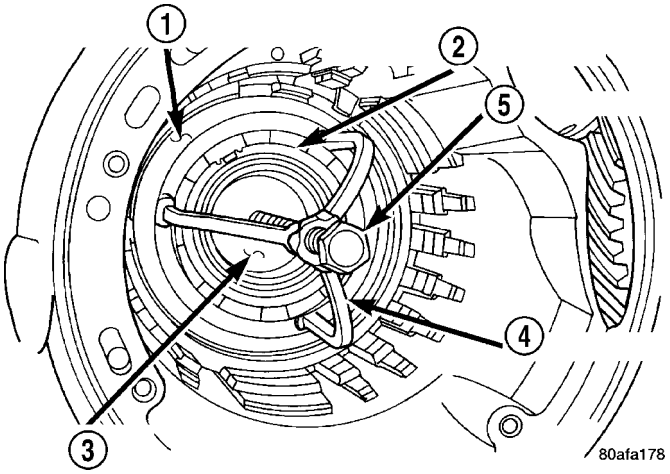

Fig. 73 Compressor Tool in Use

1 - LOW/REVERSE CLUTCH RETURN SPRING
2 - SNAP RING (INSTALL AS SHOWN)
3 - TOOL 6057
4 - TOOL 5059
5 - TOOL 5058–3

41TE AUTOMATIC TRANSAXLE (Continued)

(57) Compress low/reverse piston return spring and remove snap ring (Fig. 74).

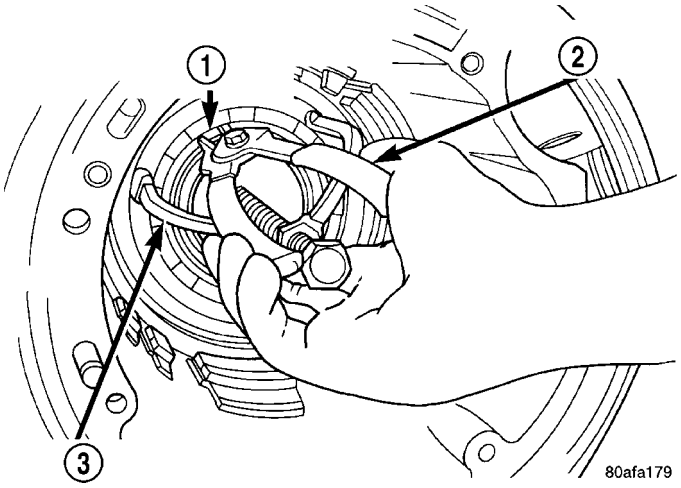

Fig. 74 Remove Snap Ring

1 - SNAP RING OPENING MUST BE BETWEEN SPRING LEVERS (AS SHOWN)
2 - SNAP RING PLIERS
3 - TOOL 6057

(58) Remove low/reverse spring compressor tool and low reverse piston return spring (Fig. 75).

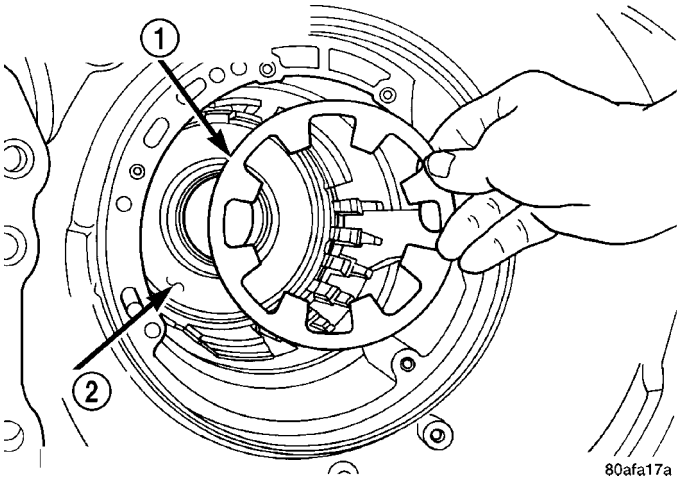

Fig. 75 Low/Reverse Piston Return Spring

1 - LOW/REVERSE PISTON RETURN SPRING
2 - PISTON

(59) Using a suitable punch , drive out park guide bracket pivot shaft plug (Fig. 76).

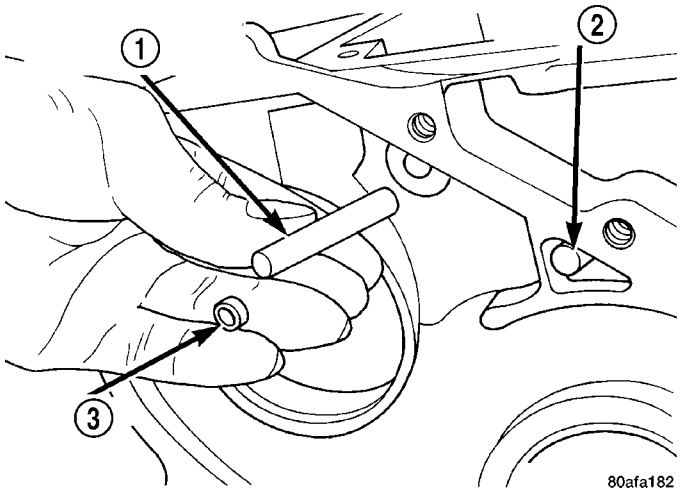

Fig. 76 Remove Anchor Shaft and Plug

1 - GUIDE BRACKET ANCHOR SHAFT
2 - PIVOT SHAFT
3 - ANCHOR SHAFT PLUG

(60) Using ordinary pliers, remove pivot shaft and guide bracket assembly (Fig. 77).

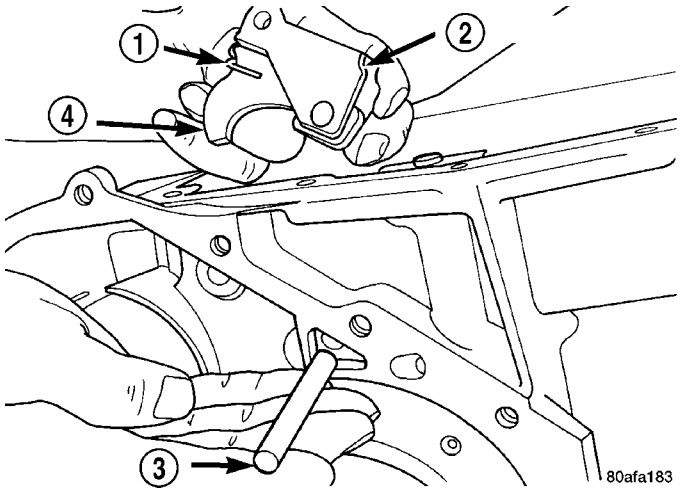

Fig. 77 Pivot Shaft and Guide Bracket

1 - ANTIRACHET SPRING
2 - GUIDE BRACKET
3 - PIVOT SHAFT
4 - PAWL

41TE AUTOMATIC TRANSAXLE (Continued)

(61) Inspect guide bracket components for excessive wear and replace if necessary (Fig. 78).

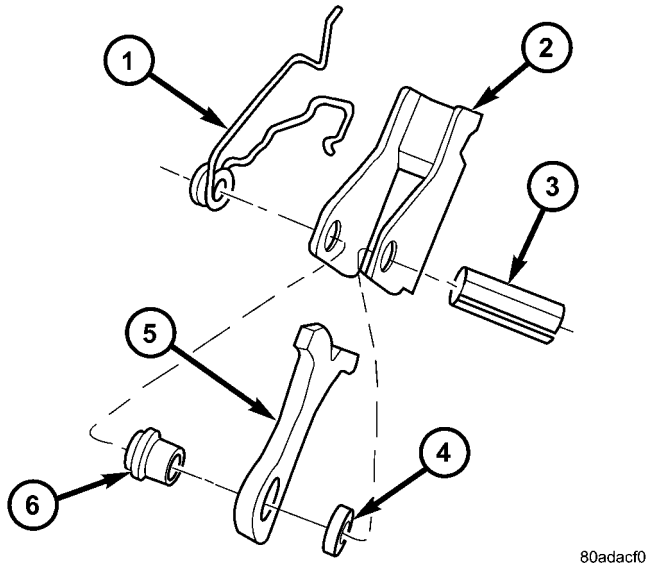

Fig. 78 Guide Bracket Disassembled

1 - ANTIRATCHET SPRING
2 - GUIDE BRACKET
3 - SPLIT SLEEVE
4 - SPACER
5 - PAWL
6 - STEPPED SPACER

NOTE: The Low/Reverse Clutch Piston has bonded seals which are not individually serviceable. Seal replacement requires replacement of the piston assembly.

(62) Remove low/reverse clutch piston (Fig. 79).

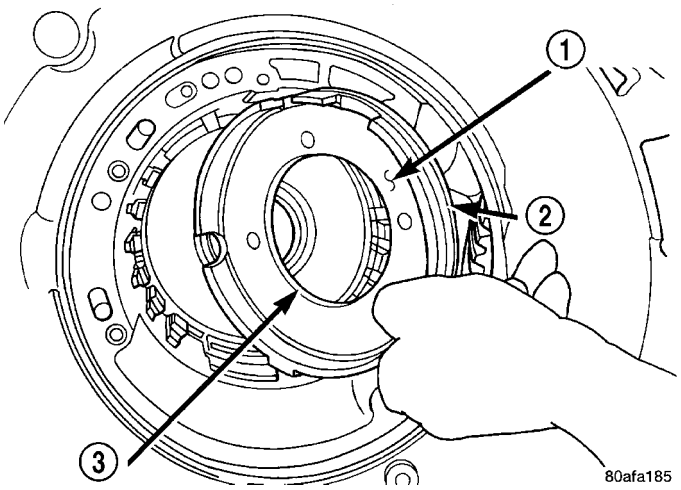

Fig. 79 Remove Low/Reverse Clutch Piston

1 - LOW/REVERSE CLUTCH PISTON
2 - BONDED SEAL
3 - BONDED SEAL

(63) Remove low/reverse piston retainer-to-case screws (Fig. 80).

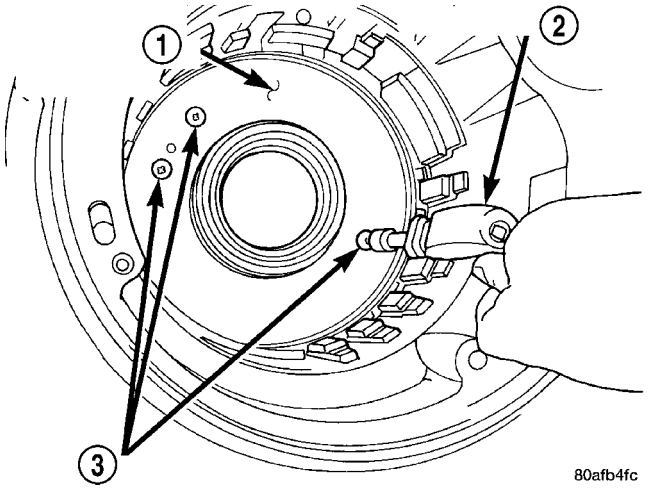

Fig. 80 Remove Piston Retainer Attaching Screws

1 - LOW/REVERSE CLUTCH PISTON RETAINER
2 - SCREWDRIVER
3 - TORX-LOC SCREWS

(64) Remove low/reverse piston retainer (Fig. 81).

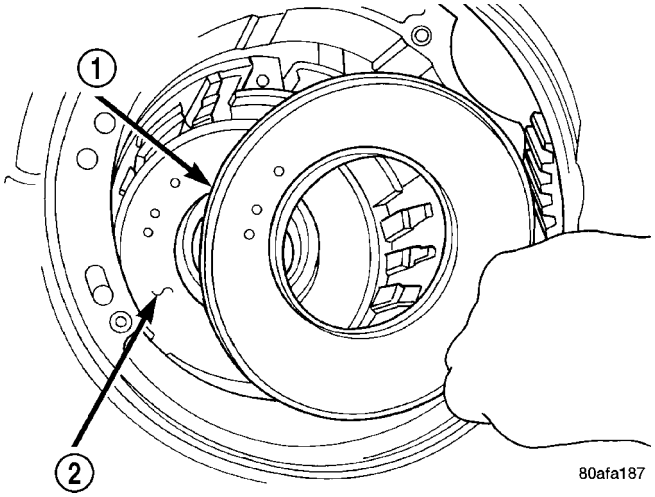

Fig. 81 Remove Piston Retainer

1 - LOW/REVERSE CLUTCH PISTON RETAINER
2 - GASKET

41TE AUTOMATIC TRANSAXLE (Continued)

(65) Remove low/reverse piston retainer-to-case gasket (Fig. 82).

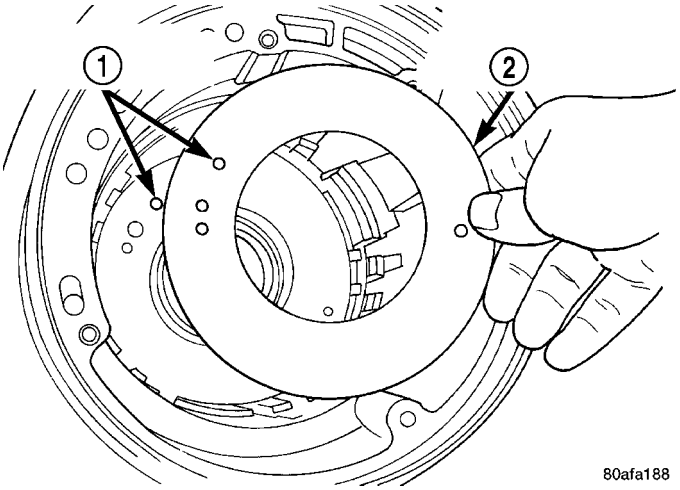

Fig. 82 Remove Piston Retainer Gasket

1 - GASKET HOLES MUST LINE UP
2 - LOW/REVERSE CLUTCH PISTON RETAINER GASKET

(66) Using a hammer and suitable drift, drive out inner output bearing cup (Fig. 83).

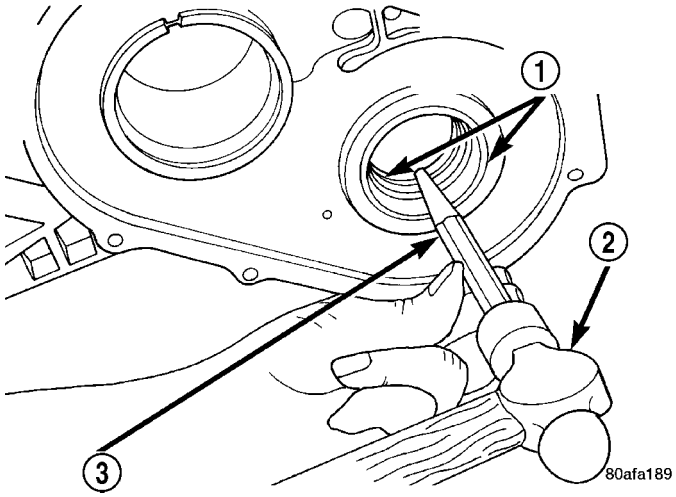

Fig. 83 Remove Output Bearing Inner Cup

1 - OUTPUT BEARING CUPS (REPLACE IN PAIRS)
2 - HAMMER
3 - BRASS DRIFT

(67) Using tool 6062, remove outer output bearing cup (Fig. 84).

ASSEMBLY

CAUTION: The cooler bypass valve must be replaced if transaxle failure has occurred. Do not attempt to reuse or clean old valve.

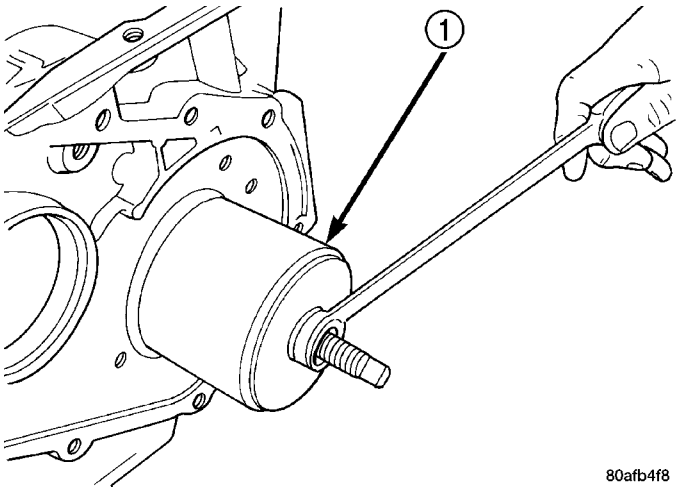

Fig. 84 Remove Output Bearing Outer Cup

1 - TOOL 6062

NOTE: If transaxle is being overhauled (clutch and/or seal replacement), the TCM/PCM Quick Learn procedure must be performed. (Refer to 8 - ELECTRICAL/ELECTRONIC CONTROL MODULES/TRANSMISSION CONTROL MODULE - STANDARD PROCEDURE)

(1) Install both output bearing cups using Tool 5050 (Fig. 85).

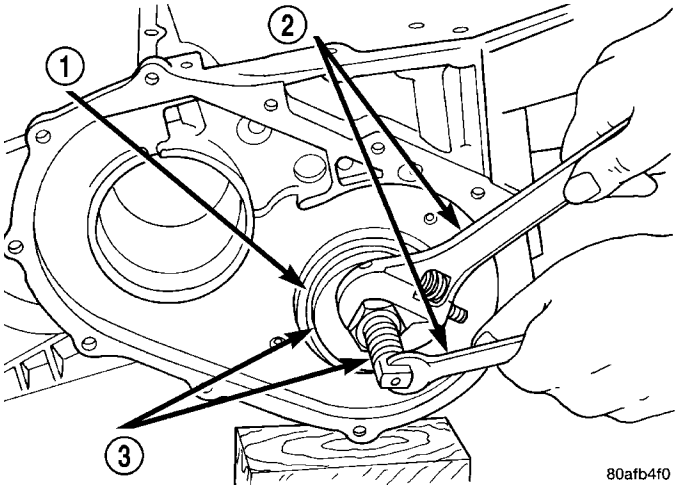

Fig. 85 Install Both Output Bearing Cups

1 - OUTPUT BEARING CUPS
2 - WRENCHES
3 - TOOL 5050

41TE AUTOMATIC TRANSAXLE (Continued)

(2) Install low/reverse piston retainer gasket (Fig. 86). Make sure gasket holes line up with case.

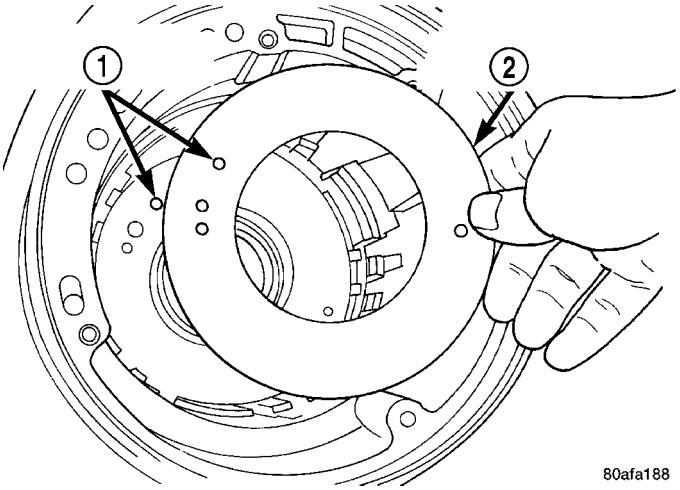

Fig. 86 Install Piston Retainer Gasket

1 - GASKET HOLES MUST LINE UP
2 - LOW/REVERSE CLUTCH PISTON RETAINER GASKET

(3) Install low/reverse piston retainer (Fig. 87).

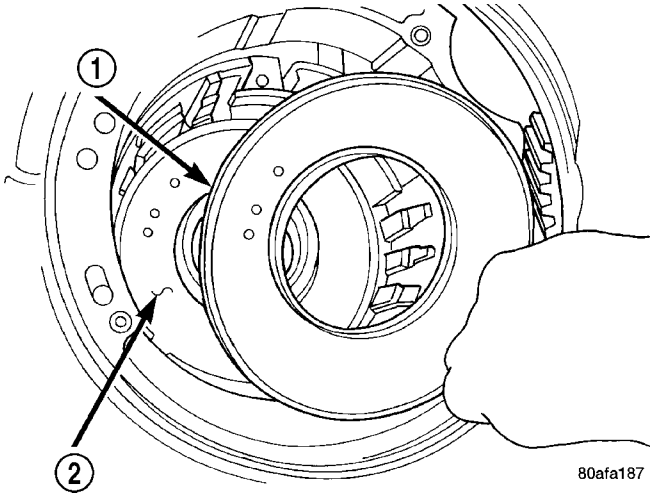

Fig. 87 Install Piston Retainer

1 - LOW/REVERSE CLUTCH PISTON RETAINER
2 - GASKET

(4) Install low/reverse piston retainer-to-case bolts (Fig. 88) and torque to 5 N·m (45 in. lbs.).

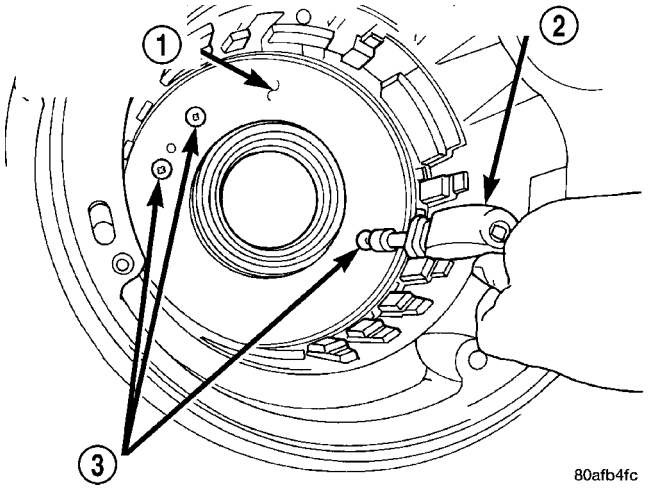

Fig. 88 Install Piston Retainer Attaching Screws

1 - LOW/REVERSE CLUTCH PISTON RETAINER
2 - SCREWDRIVER
3 - TORX-LOC SCREWS

NOTE: The Low/Reverse Clutch Piston has bonded seals which are not individually serviceable. Seal replacement requires replacement of the piston assembly.

(5) Install low/reverse clutch piston (Fig. 89).

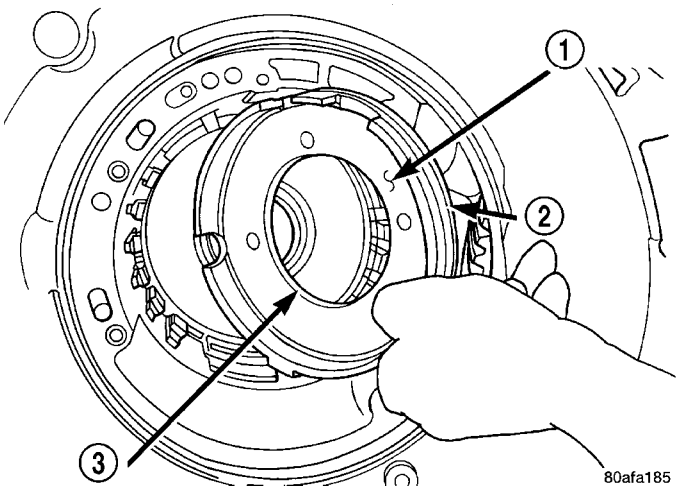

Fig. 89 Install Low/Reverse Clutch Piston

1 - LOW/REVERSE CLUTCH PISTON
2 - BONDED SEAL
3 - BONDED SEAL

41TE AUTOMATIC TRANSAXLE (Continued)

(6) Assemble park guide bracket assembly (Fig. 91) (Fig. 90).

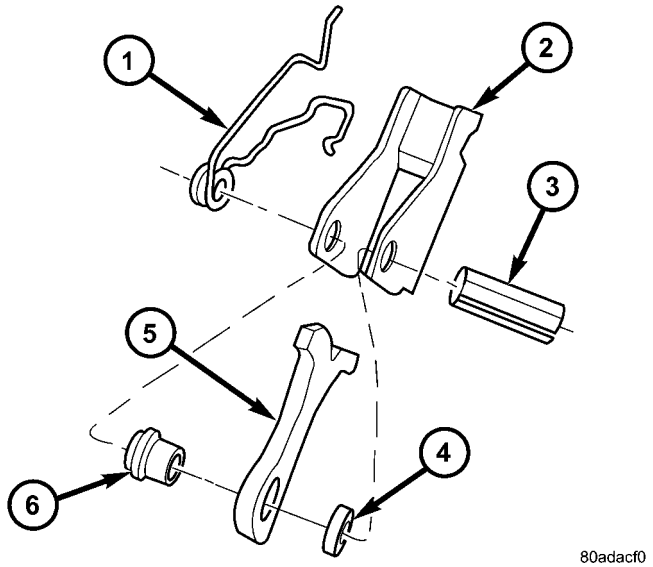

Fig. 90 Guide Bracket Disassembled

1 - ANTIRATCHET SPRING
2 - GUIDE BRACKET
3 - SPLIT SLEEVE
4 - SPACER
5 - PAWL
6 - STEPPED SPACER

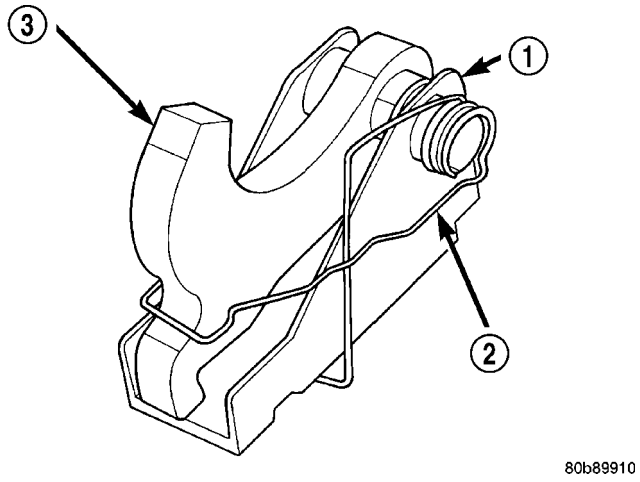

Fig. 91 Guide Bracket

1 - GUIDE BRACKET
2 - ANTIRATCHET SPRING (MUST BE ASSEMBLED AS SHOWN)
3 - PAWL

(7) Install guide bracket into position and insert pivot shaft (Fig. 92).

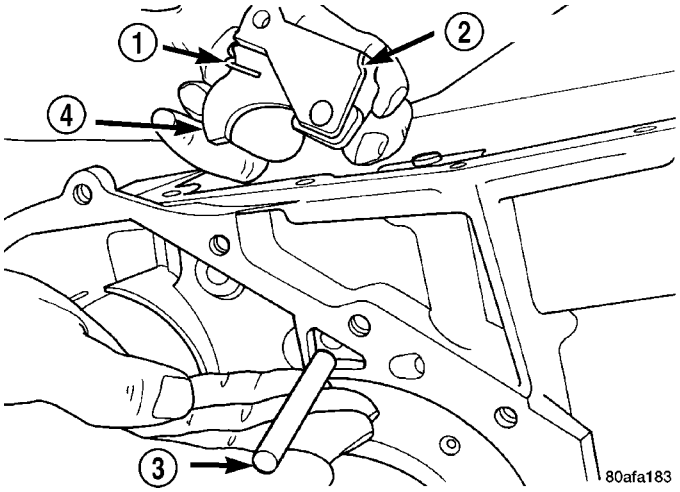

Fig. 92 Pivot Shaft and Guide Bracket

1 - ANTIRACHET SPRING
2 - GUIDE BRACKET
3 - PIVOT SHAFT
4 - PAWL

(8) Install anchor shaft and plug (Fig. 93). Make sure guide bracket and split sleeve are in contact with the rear of the transaxle case.

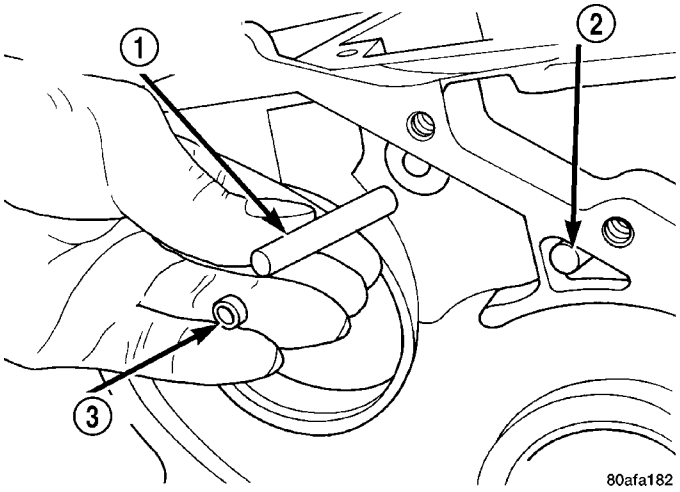

Fig. 93 Install Anchor Shaft and Plug

1 - GUIDE BRACKET ANCHOR SHAFT
2 - PIVOT SHAFT
3 - ANCHOR SHAFT PLUG

41TE AUTOMATIC TRANSAXLE (Continued)

(9) Install low/reverse piston return spring (Fig. 94).

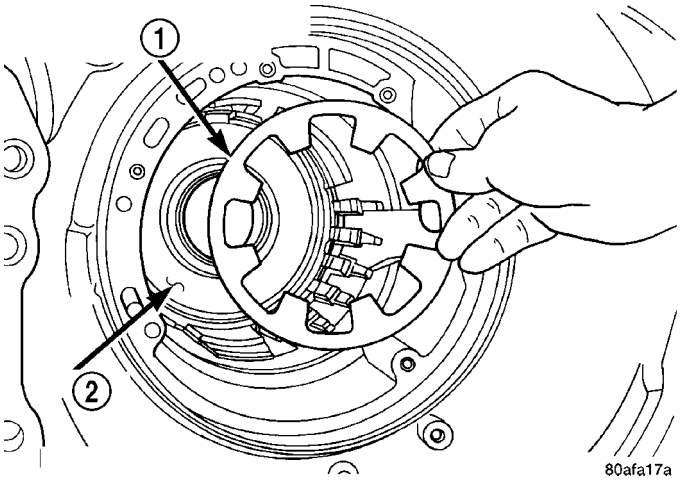

Fig. 94 Low/Reverse Piston Return Spring

1 - LOW/REVERSE PISTON RETURN SPRING
2 - PISTON

(10) Install low/reverse spring compressor into position (Fig. 95). Compress low/reverse piston and install snap ring as shown in (Fig. 96).

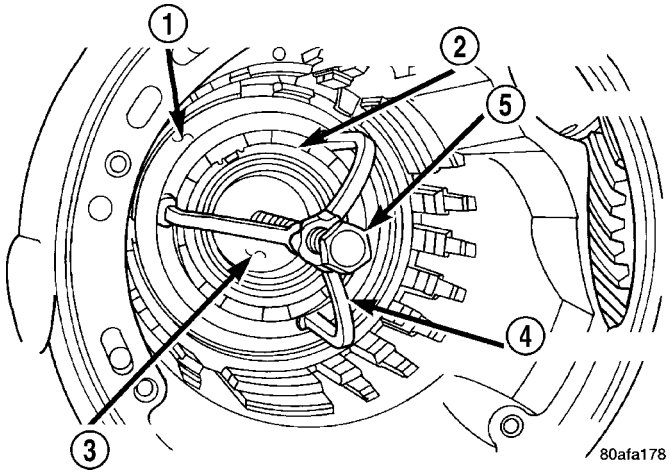

Fig. 95 Compressor Tool in Use

1 - LOW/REVERSE CLUTCH RETURN SPRING
2 - SNAP RING (INSTALL AS SHOWN)
3 - TOOL 6057
4 - TOOL 5059
5 - TOOL 5058–3

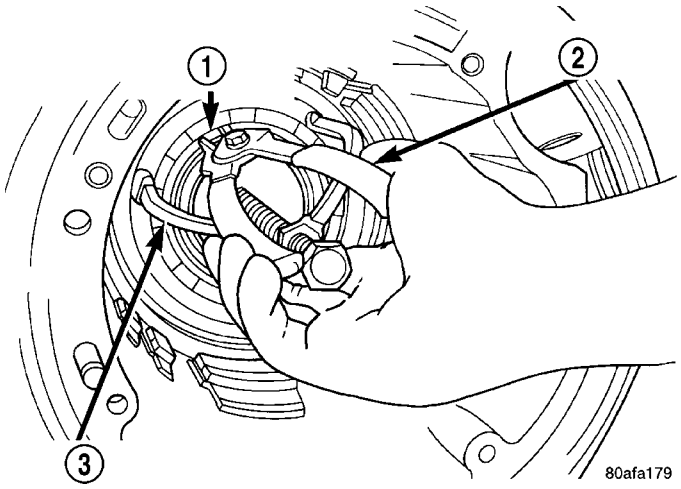

Fig. 96 Install Snap Ring

1 - SNAP RING OPENING MUST BE BETWEEN SPRING LEVERS (AS SHOWN)
2 - SNAP RING PLIERS
3 - TOOL 6057

(11) Install rear carrier bearing cone using Tool 6053 (Fig. 97).

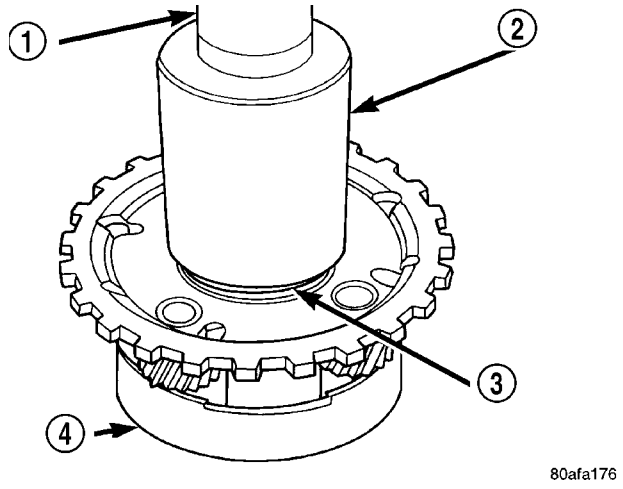

Fig. 97 Install Rear Carrier Bearing Cone

1 - ARBOR PRESS RAM
2 - TOOL 6053
3 - NEW BEARING CONE
4 - REAR CARRIER ASSEMBLY

41TE AUTOMATIC TRANSAXLE (Continued)

(12) Install rear carrier assembly to transaxle case (Fig. 98).

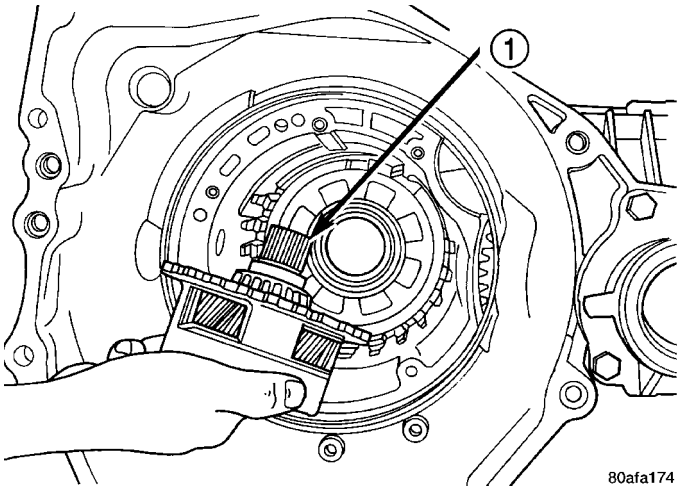

Fig. 98 Install Rear Carrier Assembly

1 - REAR CARRIER ASSEMBLY

(13) Install output gear bearing cone using Tool 5052 (Fig. 99).

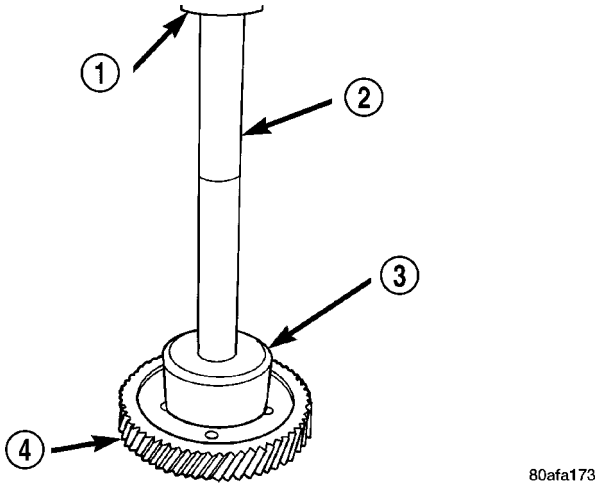

Fig. 99 Install Output Gear Bearing Cone

1 - ARBOR PRESS RAM
2 - HANDLE C-4171
3 - TOOL 5052
4 - OUTPUT GEAR

(14) **OUTPUT GEAR BEARING ADJUSTMENT:**

(a) With output gear removed, install a 4.50 mm (0.177 in.) gauging shim (Fig. 101) on the rear carrier assembly hub, using grease to hold the shim in place.

(b) Using Tool 6259, install output gear and bearing assembly. Torque to 271 N·m (200 ft. lbs.).

(c) Measure bearing end play. Attach Tool L-4432 to the gear (Fig. 100).

(d) Push and pull the gear while rotating back and forth to ensure seating of bearing rollers.

(e) Using a dial indicator mounted to the transaxle case, measure output gear end play as shown in (Fig. 100).

(f) Refer to the output gear bearing shim chart for the required shim to obtain proper bearing setting.

(g) Use Tool 6259 to remove the output gear retaining bolt and washer. To remove the output gear, use Tool L4407A.

(h) Remove the gauging shim and install the proper shim determined by the chart. Use grease to hold the shim in place.

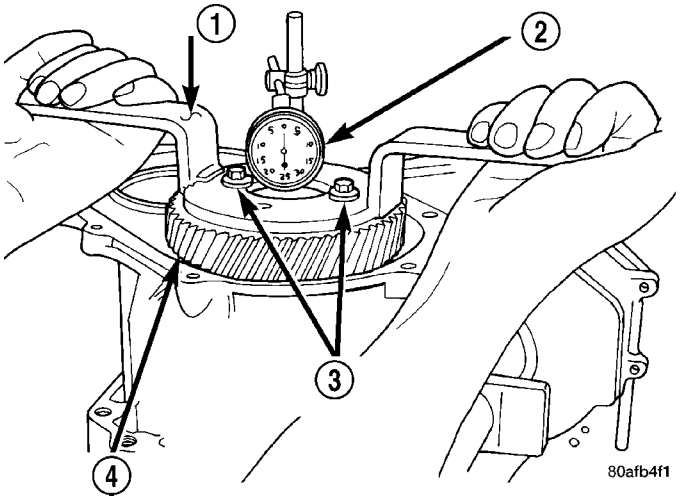

Fig. 100 Checking Output Gear Bearings End Play

1 - TOOL L-4432
2 - DIAL INDICATOR
3 - SPECIAL SCREWS TOOL 6260
4 - OUTPUT GEAR

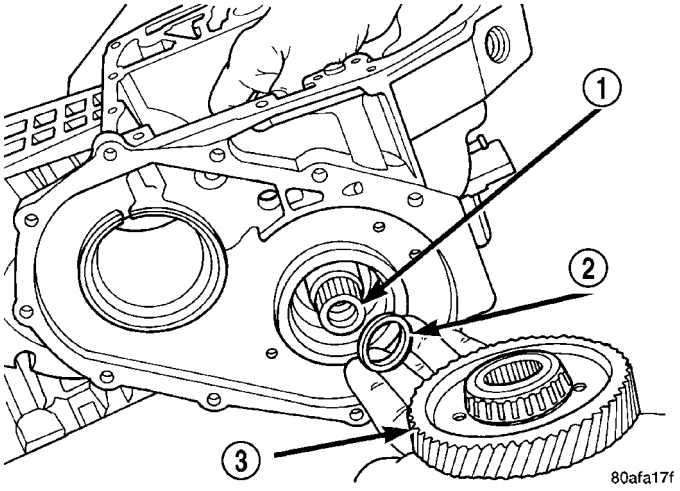

Fig. 101 Output Gear and (Select) Shim

1 - REAR CARRIER ASSEMBLY
2 - SHIM (SELECT)
3 - OUTPUT GEAR

41TE AUTOMATIC TRANSAXLE (Continued)

OUTPUT GEAR BEARING SHIM CHART

End Play	Shim Needed	Part Number	End Play	Shim Needed	Part Number
0.05mm (0.002 in.)	4.42mm (0.174 in.)	4412830AB	0.53mm (0.021 in.)	3.94mm (0.155 in.)	4412818AB
0.08mm (0.003 in.)	4.38mm (0.172 in.)	4412829AB	0.56mm (0.022 in.)	3.90mm (0.154 in.)	4412817AB
0.10mm (0.004 in.)	4.38mm (0.172 in.)	4412829AB	0.58mm (0.023 in.)	3.90mm (0.154 in.)	4412817AB
0.13mm (0.005 in.)	4.34mm (0.171 in.)	4412828AB	0.61mm (0.024 in.)	3.86mm (0.152 in.)	4412816AB
0.15mm (0.006 in.)	4.30mm (0.169 in.)	4412827AB	0.64mm (0.025 in.)	3.82mm (0.150 in.)	4412815AB
0.18mm (0.007 in.)	4.30mm (0.169 in.)	4412827AB	0.66mm (0.026 in.)	3.82mm (0.150 in.)	4412815AB
0.20mm (0.008 in.)	4.26mm (0.168 in.)	4412826AB	0.69mm (0.027 in.)	3.78mm (0.149 in.)	4412814AB
0.23mm (0.009 in.)	4.22mm (0.166 in.)	4412825AB	0.71mm (0.028 in.)	3.74mm (0.147 in.)	4412813AB
0.25mm (0.010 in.)	4.22mm (0.166 in.)	4412825AB	0.74mm (0.029 in.)	3.74mm (0.147 in.)	4412813AB
0.28mm (0.011 in.)	4.18mm (0.165 in.)	4412824AB	0.76mm (0.030 in.)	3.70mm (0.146 in.)	4412812AB
0.30mm (0.012 in.)	4.14mm (0.163 in.)	4412823AB	0.79mm (0.031 in.)	3.66mm (0.144 in.)	4412811AB
0.33mm (0.013 in.)	4.14mm (0.163 in.)	4412823AB	0.81mm (0.032 in.)	3.66mm (0.144 in.)	4412811AB
0.36mm (0.014 in.)	4.10mm (0.161 in.)	4412822AB	0.84mm (0.033 in.)	3.62mm (0.143 in.)	4412810AB
0.38mm (0.015 in.)	4.10mm (0.161 in.)	4412822AB	0.86mm (0.034 in.)	3.62mm (0.143 in.)	4412810AB
0.41mm (0.016 in.)	4.06mm (0.160 in.)	4412821AB	0.89mm (0.035 in.)	3.58mm (0.141)	4412809AB
0.43mm (0.017 in.)	4.02mm (0.158 in.)	4412820AB	0.91mm (0.036in.)	3.54mm (0.139 in.)	4412808AB
0.46mm (0.018 in.)	4.02mm (0.158 in.)	4412820AB	0.94mm (0.037 in.)	3.54mm (0.139 in.)	4412808AB
0.48mm (0.019 in.)	3.98mm (0.157 in.)	4412819AB	0.97mm (0.038 in.)	3.50mm (0.138 in.)	4412807AB
0.51mm (0.020 in.)	3.94mm (0.155 in.)	4412818AB			

41TE AUTOMATIC TRANSAXLE (Continued)

(15) Install the output gear and bearing assembly using Tool 6261 (Fig. 102).

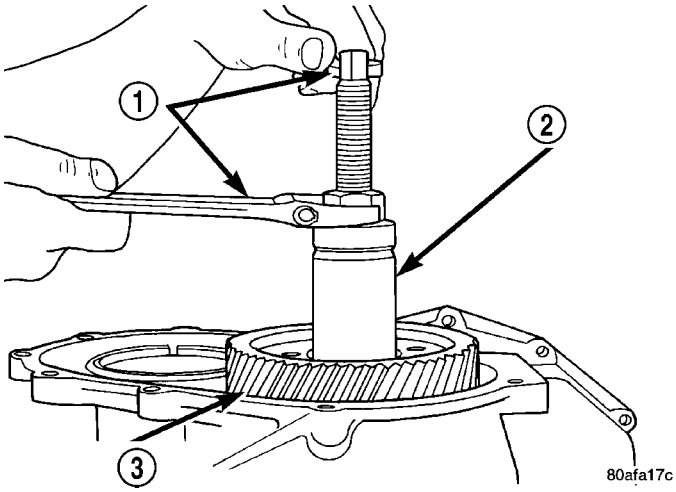

Fig. 102 Install Output Gear

1 - WRENCHES
2 - TOOL 6261 WITH STUD
3 - OUTPUT GEAR

(16) Install NEW output gear retaining bolt and washer (Fig. 103). Using Tool 6259, torque output gear retaining bolt to 271 N·m (200 ft. lbs.) (Fig. 104).

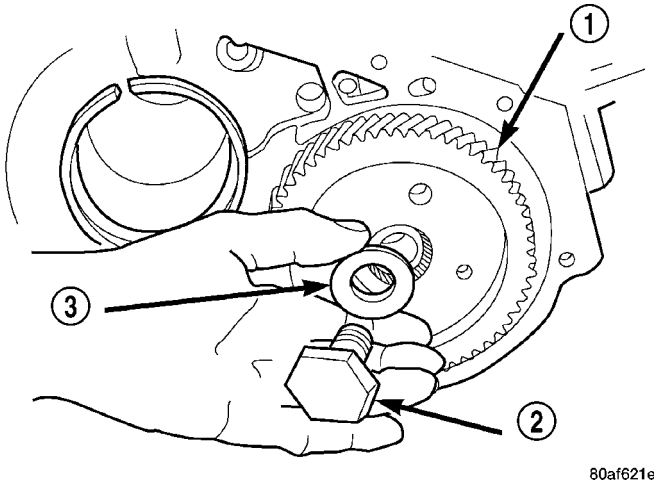

Fig. 103 Output Gear Bolt and Washer

1 - OUTPUT GEAR
2 - BOLT
3 - CONED LOCK WASHER

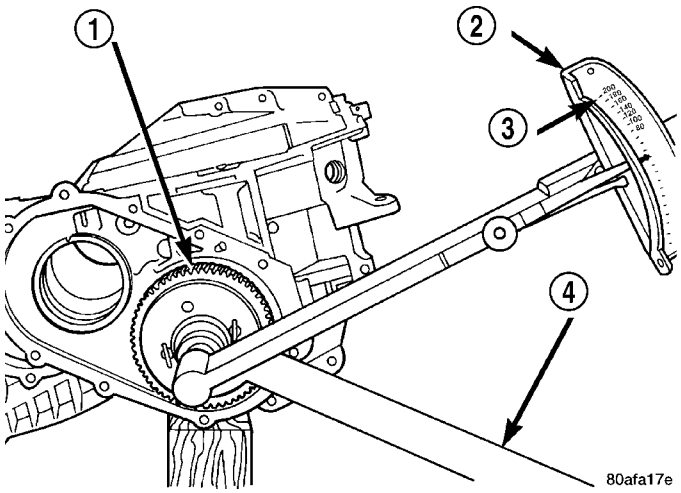

Fig. 104 Tighten Output Gear to 271 N•m (200 ft. lbs.)

1 - OUTPUT GEAR
2 - TORQUE WRENCH
3 - 200 FT. LBS.
4 - TOOL 6259

(17) Using an inch pound torque wrench (Fig. 105), check output shaft turning torque. **Output shaft turning torque should be within 3-8 in. lbs.** If the turning torque is too high, install a 0.04 mm (0.0016 in.) thicker shim. If the turning torque is too low, install a 0.04 mm (0.0016 in.) thinner shim. Repeat until the proper turning torque of 3-8 in. lbs. is obtained.

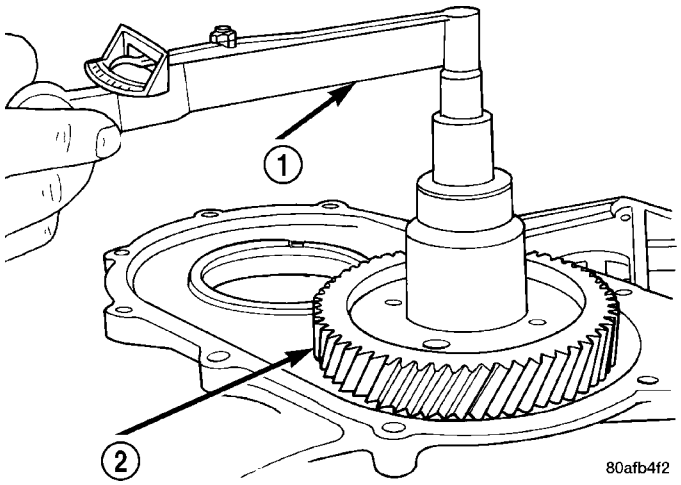

Fig. 105 Check Output Gear Bearings Turning Torque

1 - INCH-POUND TORQUE WRENCH
2 - OUTPUT GEAR

41TE AUTOMATIC TRANSAXLE (Continued)

(18) Install output gear stirrup with serrated side out (Fig. 106).

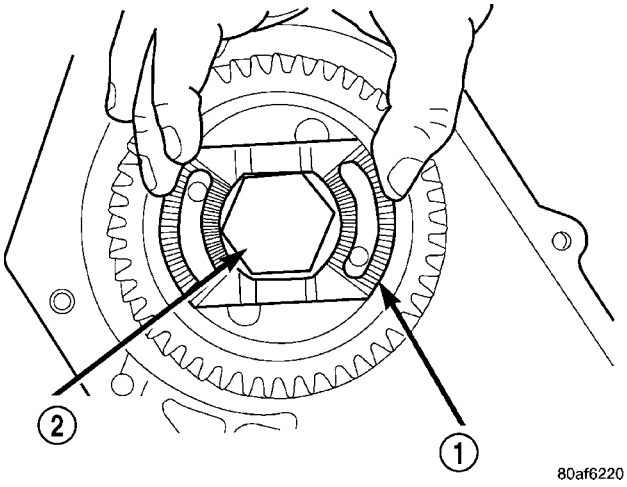

Fig. 106 Install Stirrup

1 - STIRRUP
2 - OUTPUT GEAR RETAINING BOLT

(19) Install retaining strap.

(20) Install strap bolts but do not tighten at this time (Fig. 107).

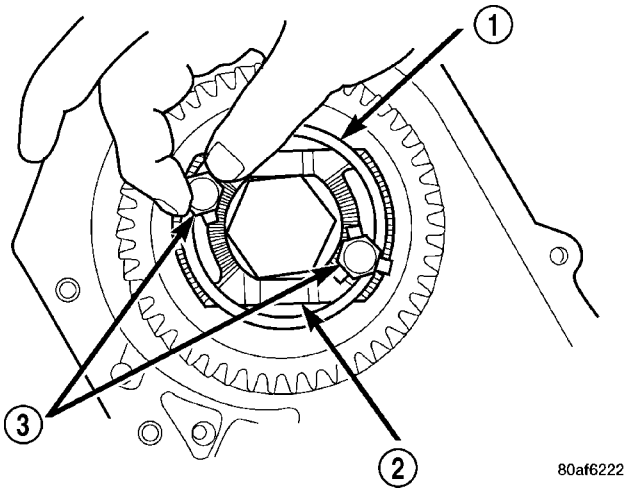

Fig. 107 Install Strap Bolts

1 - RETAINING STRAP
2 - STIRRUP
3 - RETAINING STRAP BOLTS

(21) Rotate stirrup clockwise against flats of retaining bolt (Fig. 108).

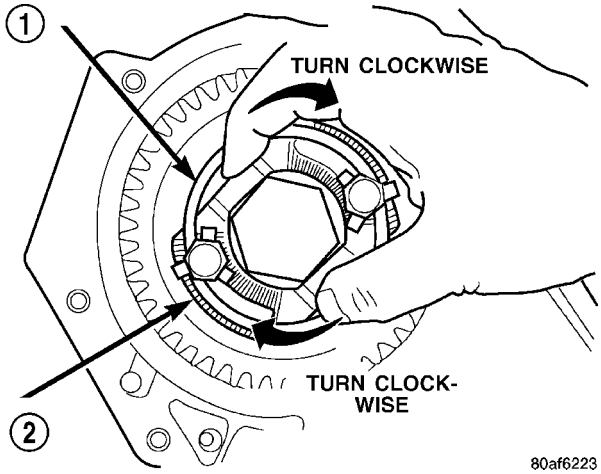

Fig. 108 Turn Stirrup Clockwise Against Bolt Flats

1 - RETAINING STRAP
2 - STIRRUP

(22) Torque stirrup strap bolts to 23 N·m (200 in. lbs.) (Fig. 109).

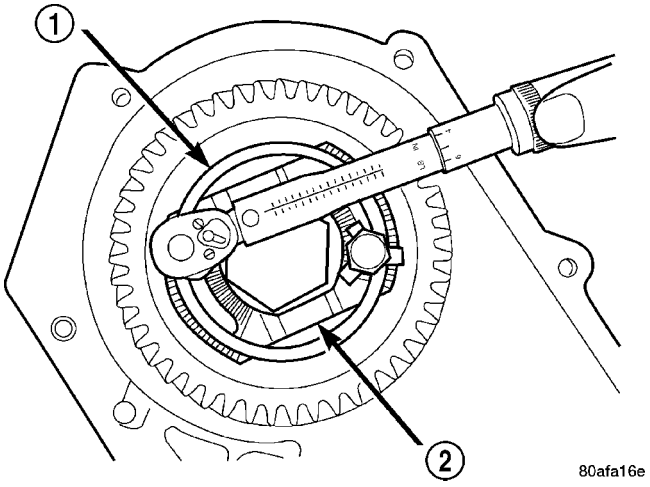

Fig. 109 Tighten Stirrup Strap Bolts To 23 N·m (200 in.) lbs.)

1 - RETAINING STRAP
2 - STIRRUP

41TE AUTOMATIC TRANSAXLE (Continued)

(23) Bend tabs on strap up against flats of bolts (Fig. 110).

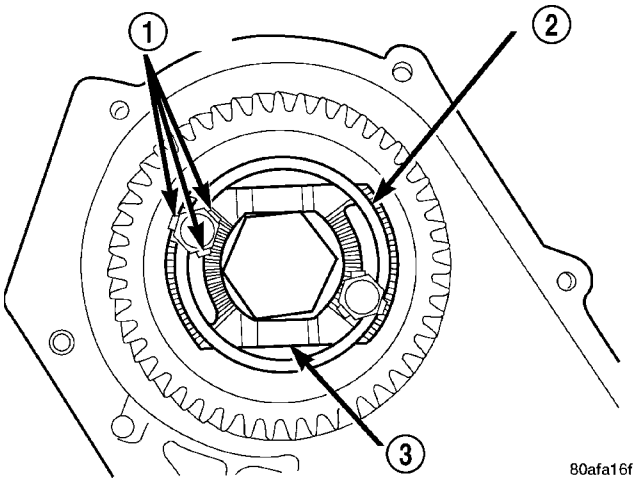

Fig. 110 Bend Tabs On Strap Up Against Flats Of Bolts

1 - RETAINING STRAP TABS
2 - RETAINING STRAP
3 - STIRRUP

(24) Install transfer shaft bearing cone using Tool 6052 (Fig. 111).

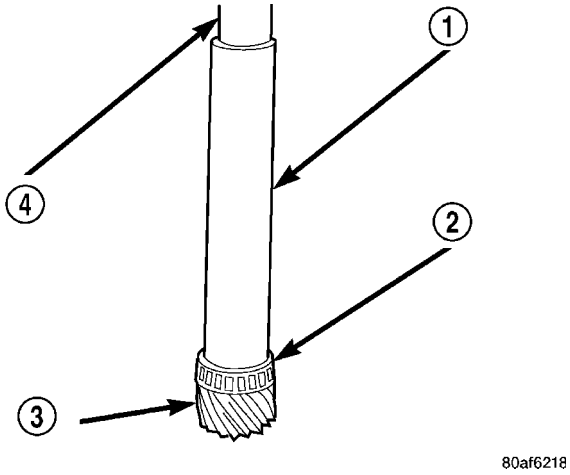

Fig. 111 Install Transfer Shaft Bearing Cone

1 - TOOL 6052
2 - NEW BEARING CONE
3 - TRANSFER SHAFT
4 - ARBOR PRESS RAM

(25) Install bearing cup and oil baffle to transfer shaft (Fig. 112).

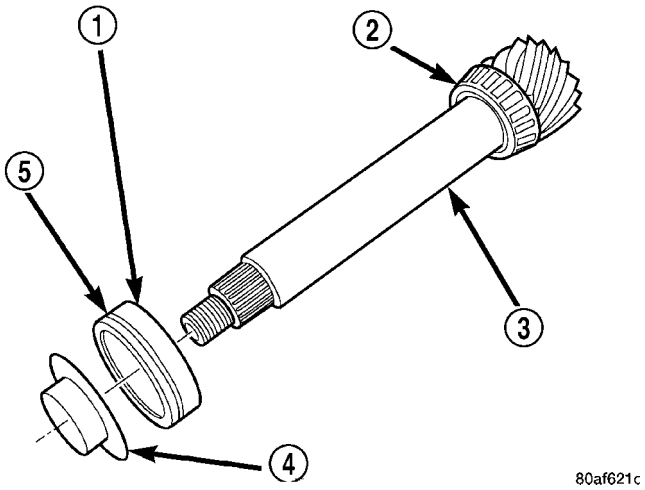

Fig. 112 Install Bearing Cup to Shaft

1 - BEARING CUP
2 - BEARING CONE
3 - TRANSFER SHAFT
4 - OIL BAFFLE
5 - O-RING

(26) Using Tool 5049A, install transfer shaft (Fig. 113).

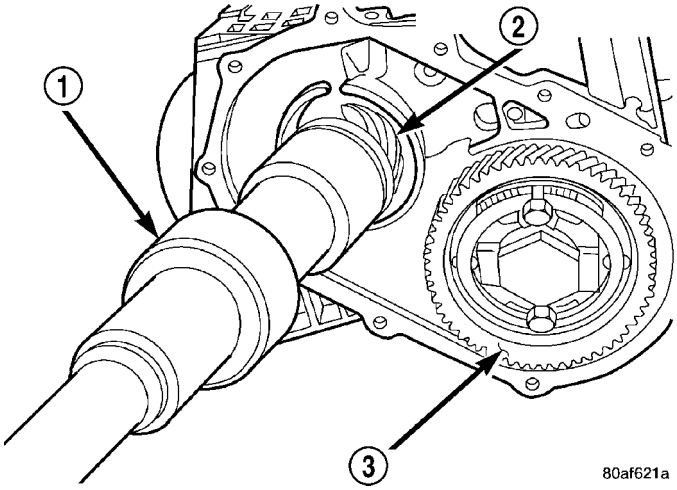

Fig. 113 Install Transfer Shaft

1 - SPECIAL TOOL 5049–A
2 - TRANSFER SHAFT
3 - OUTPUT GEAR

41TE AUTOMATIC TRANSAXLE (Continued)

(27) Using Tool 6051, install transfer shaft bearing snap ring (Fig. 114).

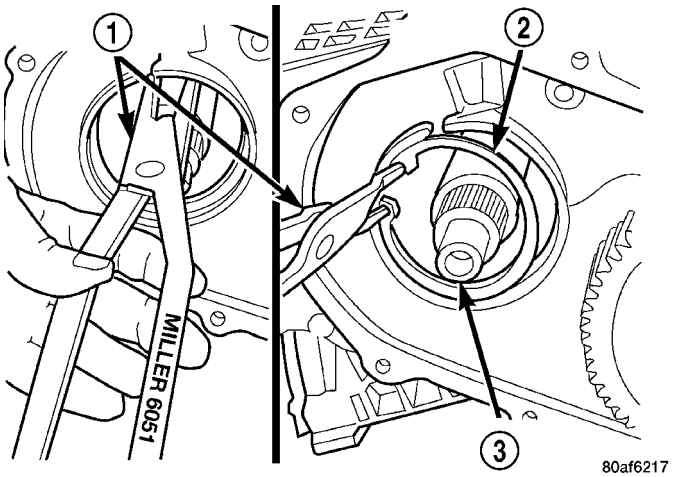

Fig. 114 Install Transfer Shaft Bearing Snap Ring

1 - SNAP RING PLIERS TOOL 6051
2 - TRANSFER SHAFT BEARING SNAP RING
3 - TRANSFER SHAFT

(28) Install transfer shaft bearing cup into retainer using Tool 6061 (Fig. 115).

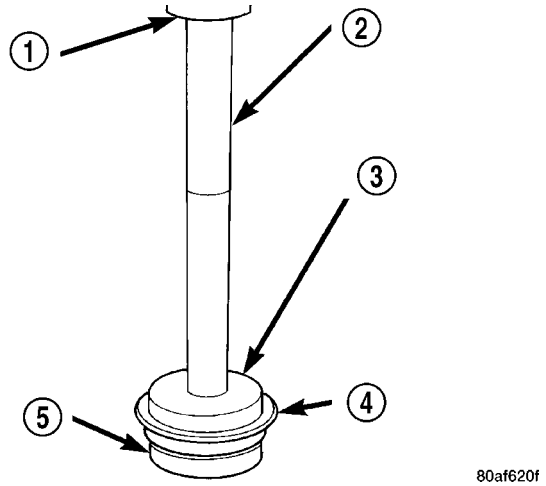

Fig. 115 Install Transfer Shaft Bearing Cup Into Retainer

1 - ARBOR PRESS RAM
2 - HANDLE C-4171
3 - TOOL 6061
4 - TRANSFER SHAFT BEARING CUP RETAINER
5 - USE REMOVED BEARING CUP TO SUPPORT RETAINER

(29) Install bearing cup retainer to transaxle (Fig. 116).

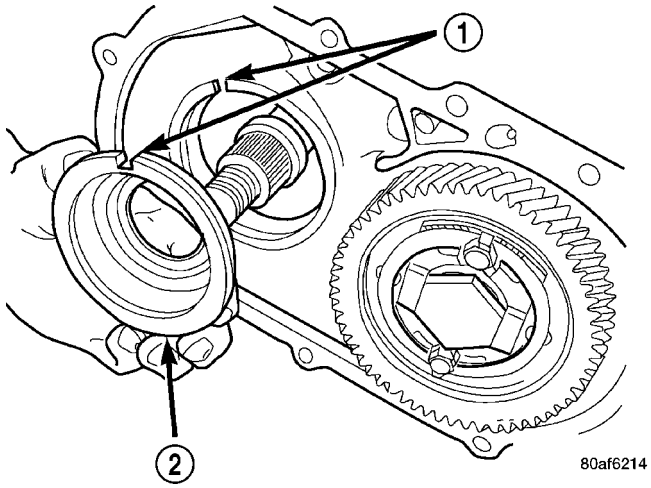

Fig. 116 Remove Bearing Cup Retainer

1 - ALIGN INDEXING TAB TO SLOT
2 - BEARING CUP RETAINER

(30) Install transfer gear bearing cone to transfer gear using Tool 5052 (Fig. 117).

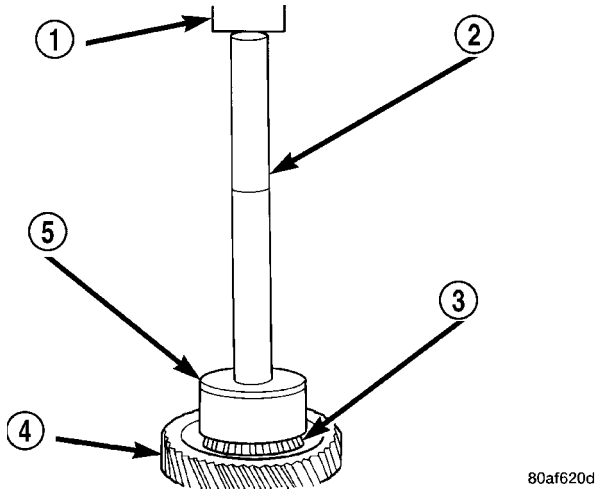

Fig. 117 Install Transfer Gear Bearing Cone

1 - ARBOR PRESS RAM
2 - HANDLE C-4171
3 - NEW BEARING CONE
4 - TRANSFER SHAFT GEAR
5 - TOOL 5052

41TE AUTOMATIC TRANSAXLE (Continued)

(31) **TRANSFER GEAR BEARING ADJUSTMENT:**

(a) Install a 4.66 mm (0.184 in.) gauging shim on the transfer shaft (Fig. 118).

(b) Install transfer shaft gear using Tool 6261. Using Tool 6259, install transfer shaft gear retaining nut to 271 N·m (200 ft. lbs.).

(c) Measure end play. Attach Tool L4432 to the transfer gear.

(d) Mount a steel ball with grease into the end of the transfer shaft.

(e) Push and pull the gear while rotating back and forth to ensure seating of the bearing rollers.

(f) Using a dial indicator, measure transfer shaft end play.

(g) Refer to the transfer shaft bearing shim chart for the required shim combination to obtain the proper bearing setting.

(h) Use Tool 6259 to remove the retaining nut and washer. Remove the transfer shaft gear using Tool L4407A.

(i) Remove the gauging shim (Fig. 118) and install the proper shim indicated by the chart.

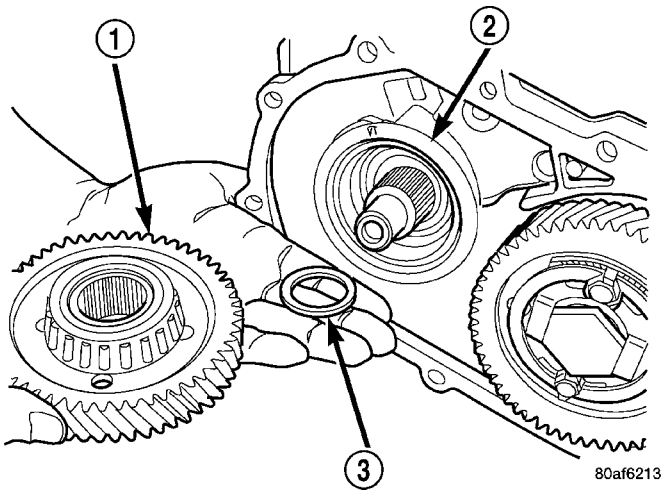

Fig. 118 Install Transfer Shaft Gear and (Select) Shim

1 - TRANSFER SHAFT GEAR
2 - BEARING CUP RETAINER
3 - SHIM (SELECT)

TRANSFER SHAFT BEARING SHIM CHART

End Play	Shim Needed	Part Number	End Play	Shim Needed	Part Number
0.05mm (0.002 in.)	4.66mm (0.183 in.)	4505588AB	0.76mm (0.030 in.)	3.94mm (0.155 in.)	4412818AB
0.08mm (0.003 in.)	4.62mm (0.182 in.)	4412835AB	0.79mm (0.031 in.)	3.90mm (0.154 in.)	4412817AB
0.10mm (0.004 in.)	4.58mm (0.180 in.)	4412834AB	0.81mm (0.032 in.)	3.90mm (0.154 in.)	4412817AB
0.13mm (0.005 in.)	4.58mm (0.180 in.)	4412834AB	0.84mm (0.033 in.)	3.86mm (0.152 in.)	4412816AB
0.15mm (0.006 in.)	4.54mm (0.178 in.)	4412833AB	0.86mm (0.034 in.)	3.82mm (0.150 in.)	4412815AB
0.18mm (0.007 in.)	4.50mm (0.177 in.)	4412832AB	0.89mm (0.035 in.)	3.82mm (0.150 in.)	4412815AB
0.20mm (0.008 in.)	4.50mm (0.177 in.)	4412832AB	0.91mm (0.036 in.)	3.78mm (0.149 in.)	4412814AB
0.23mm (0.009 in.)	4.46mm (0.175 in.)	4412831AB	0.94mm (0.037 in.)	3.74mm (0.147 in.)	4412813AB
0.25mm (0.010 in.)	4.46mm (0.175 in.)	4412831AB	0.97mm (0.038 in.)	3.74mm (0.147 in.)	4412813AB
0.28mm (0.011 in.)	4.42mm (0.174 in.)	4412830AB	0.99mm (0.039 in.)	3.70mm (0.146 in.)	4412812AB
0.30mm (0.012 in.)	4.38mm (0.172 in.)	4412829AB	1.02mm (0.040 in.)	3.66mm (0.144 in.)	4412811AB
0.33mm (0.013 in.)	4.38mm (0.172 in.)	4412829AB	1.04mm (0.041 in.)	3.66mm (0.144 in.)	4412811AB

41TE AUTOMATIC TRANSAXLE (Continued)

End Play	Shim Needed	Part Number	End Play	Shim Needed	Part Number
0.36mm (0.014 in.)	4.34mm (0.171 in.)	4412828AB	1.07mm (0.042 in.)	3.62mm (0.143 in.)	4412810AB
0.38mm (0.015 in.)	4.30mm (0.169 in.)	4412827AB	1.08mm (0.043 in.)	3.62mm (0.143 in.)	4412810AB
0.41mm (0.016 in.)	4.30mm (0.169 in.)	4412827AB	1.12mm (0.044 in.)	3.58mm (0.141)	4412809AB
0.43mm (0.017 in.)	4.26mm (0.168 in.)	4412826AB	1.14mm (0.045 in.)	3.54mm (0.139 in.)	4412808AB
0.46mm (0.018 in.)	4.22mm (0.166 in.)	4412825AB	1.17mm (0.046 in.)	3.54mm (0.139 in.)	4412808AB
0.48mm (0.019 in.)	4.22mm (0.166 in.)	4412825AB	1.19mm (0.047 in.)	3.50mm (0.138 in.)	4412807AB
0.50mm (0.020 in.)	4.18mm (0.165 in.)	4412824AB	1.22mm (0.048 in.)	3.46mm (0.136 in.)	4412806AB
0.53mm (0.021 in.)	4.18mm (0.165 in.)	4412824AB	1.24mm (0.049 in.)	3.46mm (0.136 in.)	4412806AB
0.56mm (0.022 in.)	4.14mm (0.163 in.)	4412823AB	1.27mm (0.050 in.)	3.42mm (0.135 in.)	4412805AB
0.58mm (0.023 in.)	4.10mm (0.161 in.)	4412822AB	1.30mm (0.051 in.)	3.38mm (0.133 in.)	4412804AB
0.61mm (0.024 in.)	4.10mm (0.161 in.)	4412822AB	1.32mm (0.052 in.)	3.38mm (0.133 in.)	4412804AB
0.64mm (0.025 in.)	4.06mm (0.160 in.)	4412821AB	1.35mm (0.053 in.)	3.34mm (0.132 in.)	4412803AB
0.66mm (0.026 in.)	4.02mm (0.158 in.)	4412820AB	1.37mm (0.054 in.)	3.34mm (0.132 in.)	4412803AB
0.69mm (0.027 in.)	4.02mm (0.158 in.)	4412820AB	1.40mm (0.055 in.)	3.30mm (0.130 in.)	4412802AB
0.71mm (0.028 in.)	3.98mm (0.157 in.)	4412819AB	1.45mm (0.057 in	3.26mm (0.128 in.)	4412801AB
0.74mm (0.029 in.)	3.94mm (0.155 in.)	4412818AB	1.47mm (0.058 in.)	2.22mm (0.127 in.)	4505570AB

41TE AUTOMATIC TRANSAXLE (Continued)

(32) Install the transfer shaft gear using Tool 6261 (Fig. 119).

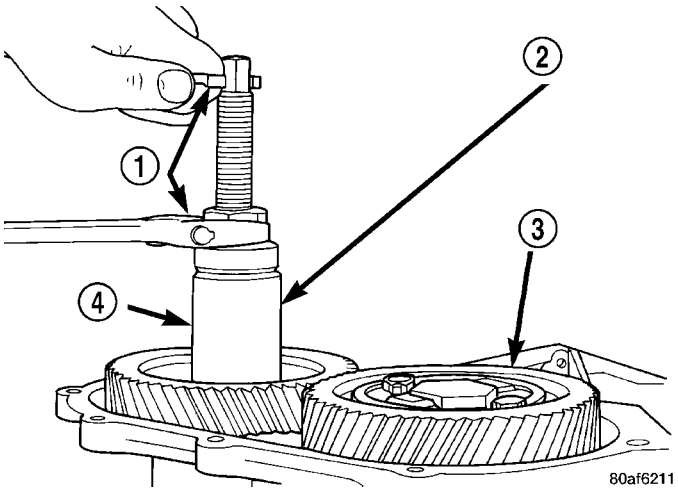

Fig. 119 Install Transfer Shaft Gear

1 - WRENCHES
2 - SPECIAL TOOL 6261
3 - OUTPUT GEAR
4 - TRANSFER SHAFT GEAR

CAUTION: Install a NEW retaining nut, as the original nut MUST NOT be reused.

(33) Install the new retaining nut and washer.

(34) Using Tool 6259, torque transfer gear retaining nut to 271 N·m (200 ft. lbs.) (Fig. 120).

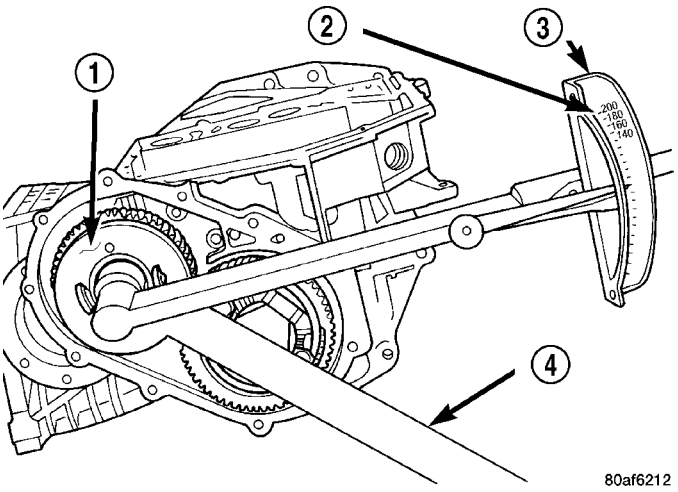

Fig. 120 Tighten Transfer Gear Nut to 271 N•m (200 ft. lbs.)

1 - TRANSFER SHAFT GEAR
2 - 200 FT. LBS.
3 - TORQUE WRENCH
4 - SPECIAL TOOL 6259

(35) Measure transfer shaft end play. **Transfer shaft end play should be within 0.05-0.10 mm (0.002-0.004 in.).** If the end play is too high, install a 0.04 mm (0.0016 in.) thicker shim. If the end play is too low, install a 0.04 mm (0.0016 in.) thinner shim. Repeat until 0.05-0.10 mm (0.002-0.004 in.) end play is obtained.

(36) Install a bead of Mopar® ATF RTV (MS-GF41) to transfer gear cover (Fig. 121).

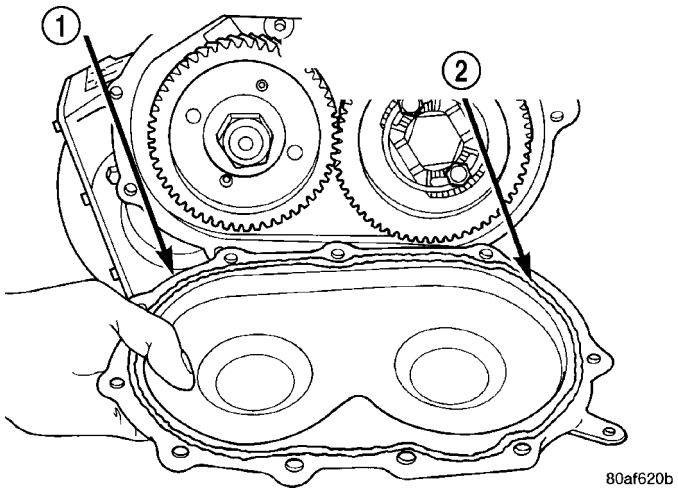

Fig. 121 Install Rear Cover

1 - REAR COVER
2 - 1/8 INCH BEAD OF MOPAR® ATF RTV (MS-GF41) AS SHOWN

(37) Install transfer gear cover-to-case bolts and torque to 20 N·m (175 in. lbs.) torque (Fig. 122).

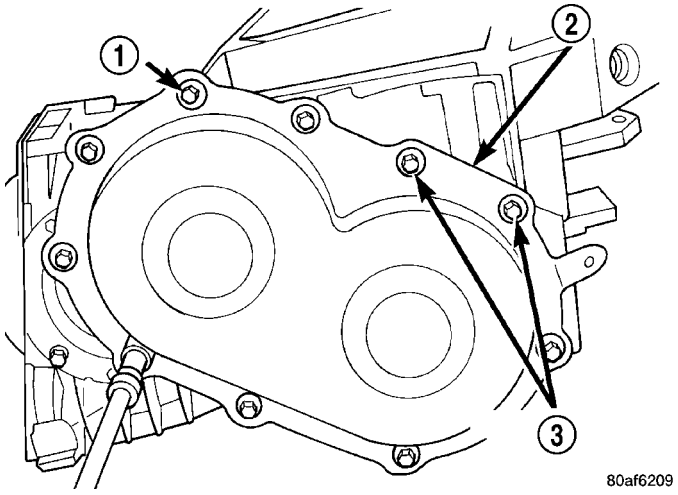

Fig. 122 Install Rear Cover Bolts

1 - REAR COVER BOLTS
2 - REAR COVER
3 - USE SEALANT ON BOLTS

41TE AUTOMATIC TRANSAXLE (Continued)

(38) Install low/reverse clutch pack (Fig. 123). Leave uppermost disc out until snap ring is installed.

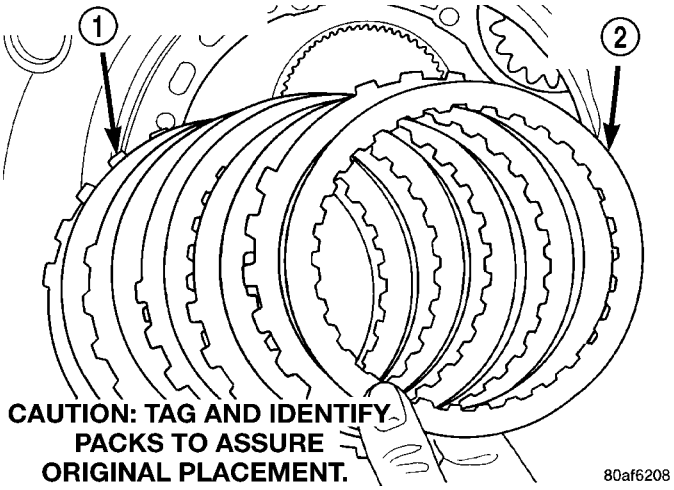

Fig. 123 Install Low/Reverse Clutch Pack

1 - CLUTCH PLATES (5)
2 - CLUTCH DISCS (5)

(39) Install low/reverse reaction plate flat snap ring (Fig. 124).

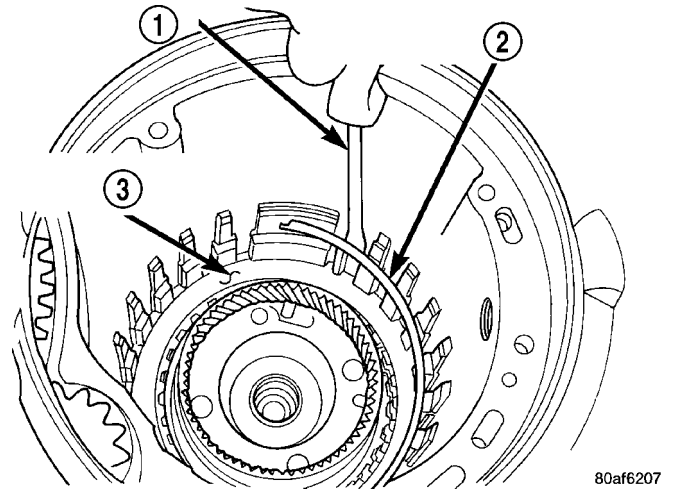

Fig. 124 Install Low/Reverse Reaction Plate Snap Ring

1 - SCREWDRIVER
2 - LOW/REVERSE REACTION PLATE FLAT SNAP RING
3 - DO NOT SCRATCH CLUTCH PLATE

(40) Install remaining low/reverse clutch disc (Fig. 125).

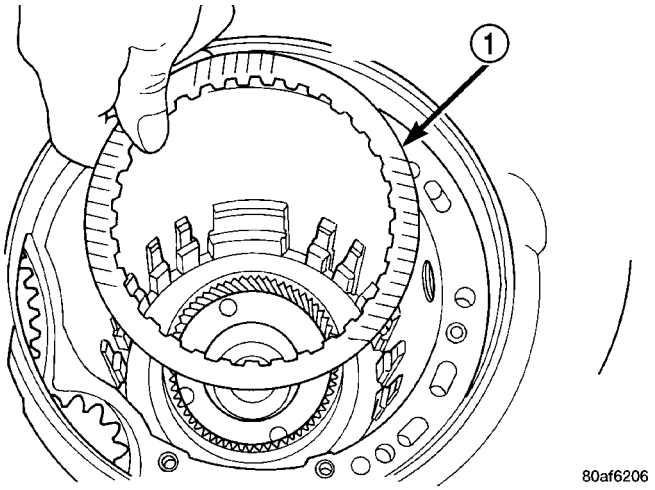

Fig. 125 Install One Disc

1 - ONE DISC FROM LOW/REVERSE CLUTCH

(41) Install low/reverse reaction plate with flat side up (Fig. 126).

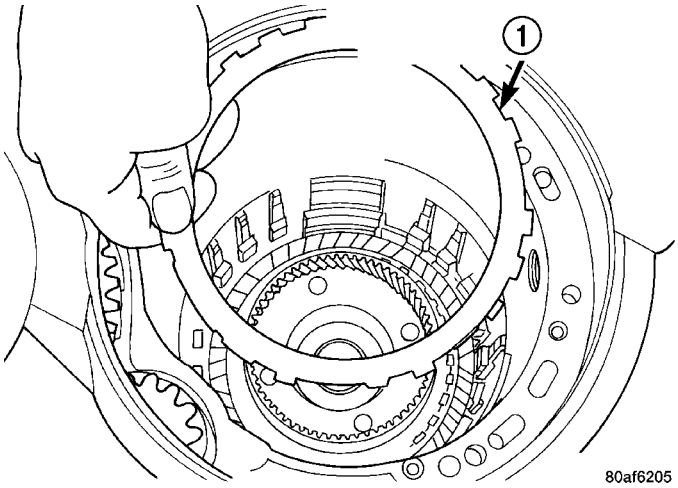

Fig. 126 Install Low/Reverse Reaction Plate

1 - LOW/REVERSE REACTION PLATE (FLAT SIDE UP)

41TE AUTOMATIC TRANSAXLE (Continued)

(42) Install tapered snap ring (with tapered side up) as shown in (Fig. 127) (Fig. 128).

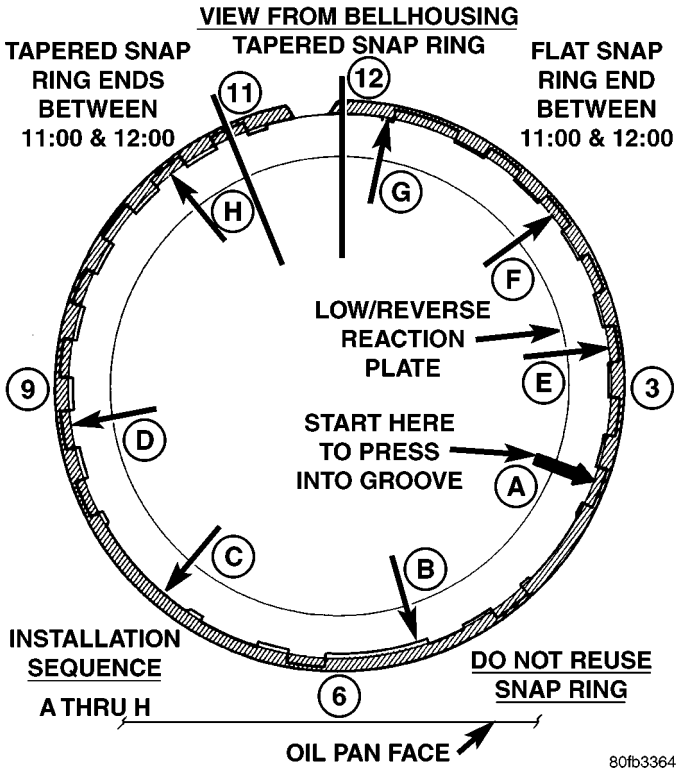

Fig. 127 Tapered Snap Ring Instructions

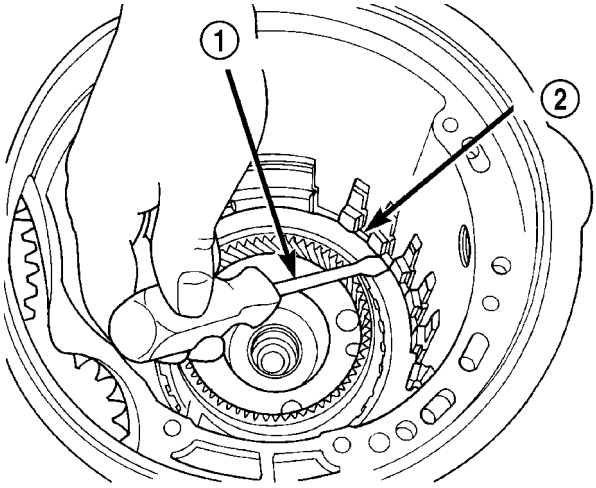

Fig. 128 Snap Ring Installed

1 - SCREWDRIVER
2 - TAPERED SNAP RING (INSTALL AS SHOWN)

(43) Set up dial indicator as shown in (Fig. 129) to measure low/reverse clutch clearance. Press down on clutch pack with finger and zero dial indicator. **Low/Reverse clutch pack clearance is 0.89-1.47 mm (0.035-0.058 in.)**. Set up indicator and record measurement in four (4) places. Take average of readings and select the proper low/reverse reaction plate to achieve specifications.

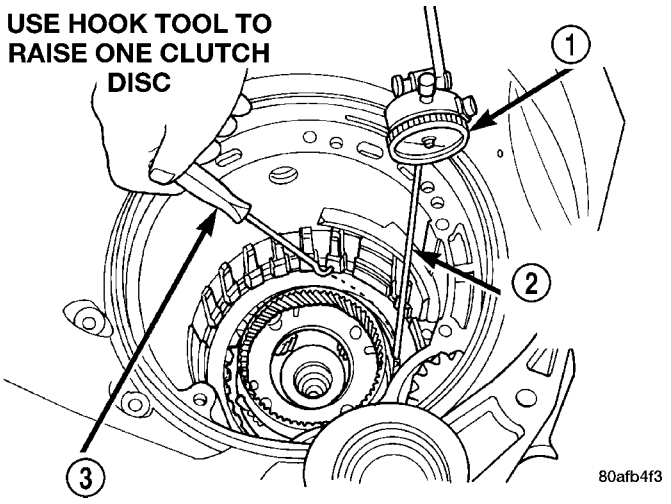

Fig. 129 Check Low/Reverse Clutch Clearance

1 - DIAL INDICATOR
2 - DIAL INDICATOR TIP TOOL 6268
3 - HOOK TOOL

LOW/REVERSE REACTION PLATE CHART

PART NUMBER	THICKNESS
4799846AA	5.88 mm (0.232 in.)
4799847AA	6.14 mm (0.242 in.)
4799848AA	6.40 mm (0.252 in.)
4799849AA	6.66 mm (0.262 in.)
4799855AA	6.92 mm (0.273 in.)

(44) Install 2/4 clutch pack (Fig. 130).

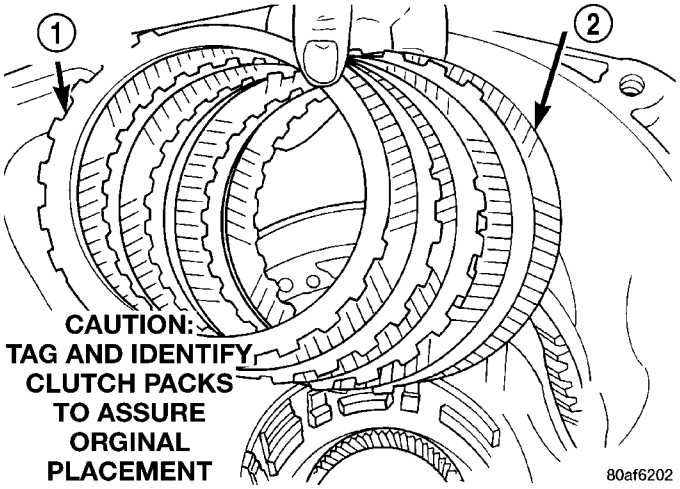

Fig. 130 Install 2/4 Clutch Pack

1 - CLUTCH PLATE (4)
2 - CLUTCH DISC (4)

41TE AUTOMATIC TRANSAXLE (Continued)

NOTE: The 2/4 Clutch Piston has bonded seals which are not individually serviceable. Seal replacement requires replacement of the piston assembly.

(45) Orient 2/4 clutch return spring to retainer as shown in (Fig. 131), and install to transaxle (Fig. 132).

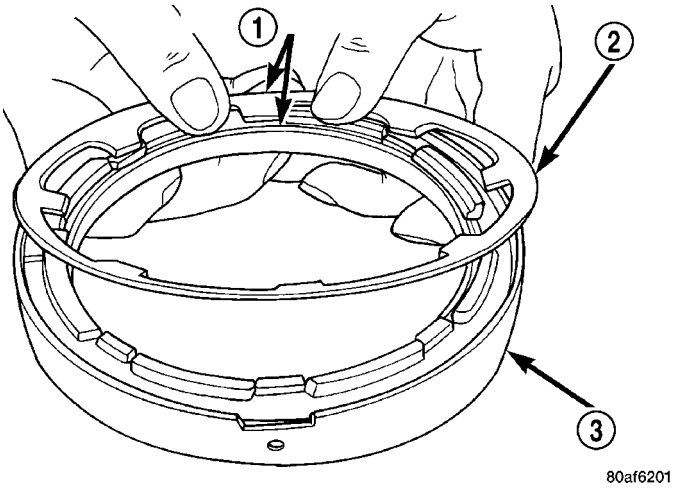

Fig. 131 Proper Orientation of 2/4 Clutch Retainer and Spring

1 - NOTE POSITION
2 - RETURN SPRING
3 - 2/4 CLUTCH RETAINER

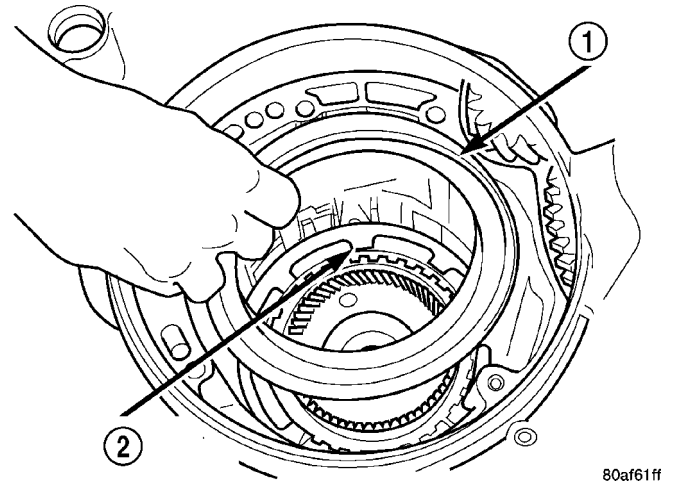

Fig. 132 2/4 Clutch Retainer

1 - 2/4 CLUTCH RETAINER
2 - 2/4 CLUTCH RETURN SPRING

(46) Using tool 5058, compress 2/4 clutch return spring just enough to install snap ring (Fig. 133).

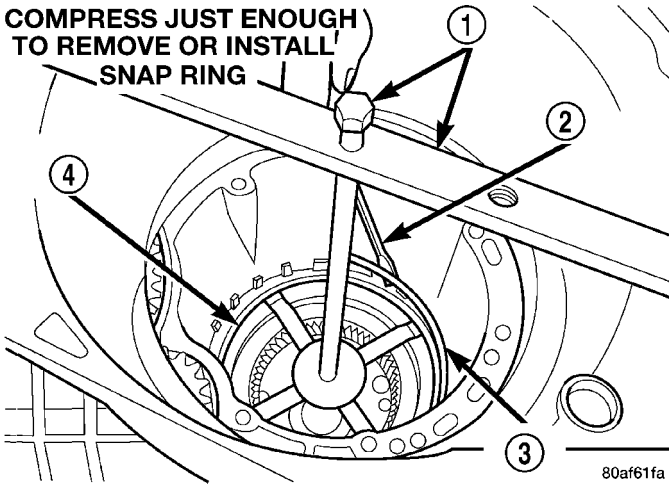

Fig. 133 Install 2/4 Clutch Retainer Snap Ring

1 - TOOL 5058
2 - SCREWDRIVER
3 - SNAP RING
4 - 2/4 CLUTCH RETAINER

(47) Install snap ring.

(48) Set up dial indicator as shown in (Fig. 134) and measure 2/4 clutch clearance. Press down on clutch pack with finger and zero dial indicator. **2/4 clutch pack clearance is 0.76-2.64 mm (0.030-0.104 in.).** Set up indicator and record measurement in four (4) places. Take average of readings. If clearance is outside this range, the clutch is assembled improperly. **There is no adjustment for 2/4 clutch clearance.**

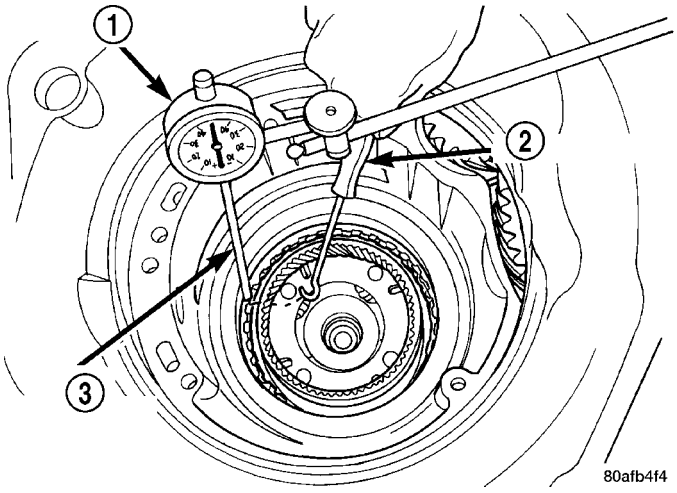

Fig. 134 Check 2/4 Clutch Clearance

1 - DIAL INDICATOR
2 - HOOK TOOL
3 - DIAL INDICATOR TIP TOOL 6268

41TE AUTOMATIC TRANSAXLE (Continued)

(49) Install rear sun gear and #7 needle bearing (Fig. 136).

NOTE: The number seven needle bearing has three anti-reversal tabs and is common with the number five and number two position. The orientation should allow the bearing to seat flat against the rear sun gear (Fig. 135). A small amount of petrolatum can be used to hold the bearing to the rear sun gear.

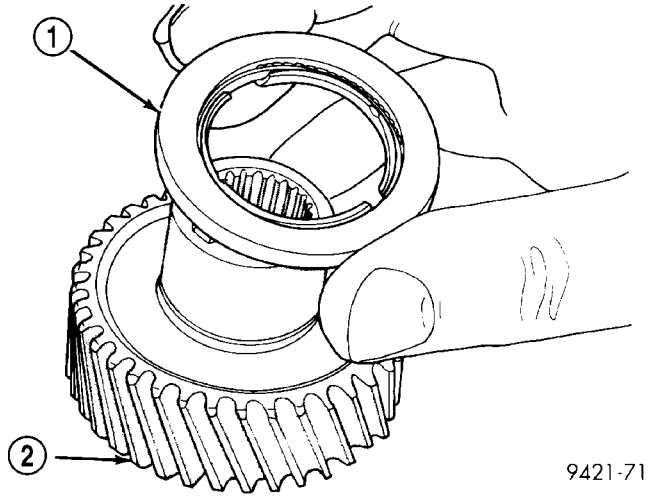

Fig. 135 Number 7 Bearing

1 - #7 NEEDLE BEARING
2 - REAR SUN GEAR

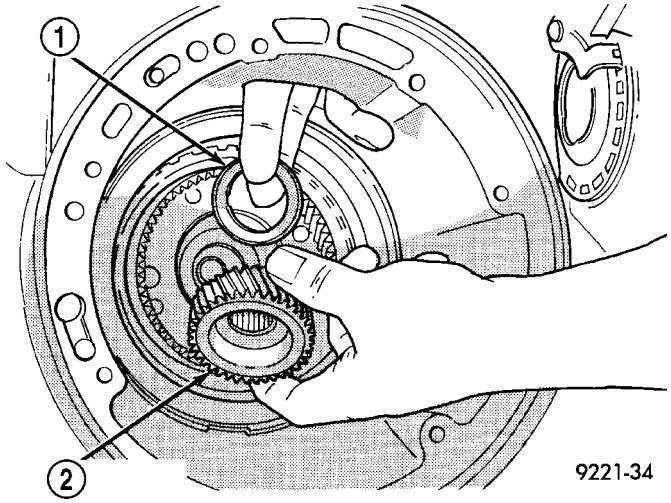

Fig. 136 Install Rear Sun Gear and #7 Needle Bearing

1 - #7 NEEDLE BEARING
2 - REAR SUN GEAR

(50) Install front carrier/rear annulus assembly and #6 needle bearing (Fig. 137).

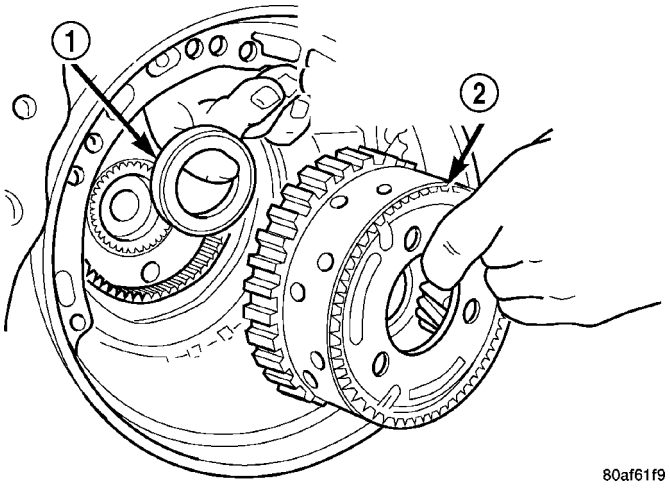

Fig. 137 Install Front Carrier and Rear Annulus Assembly

1 - #6 NEEDLE BEARING
2 - FRONT CARRIER AND REAR ANNULUS ASSEMBLY (TWIST AND PULL OR PUSH TO REMOVE OR INSTALL).

(51) Install front sun gear assembly and #4 thrust washer (Fig. 138).

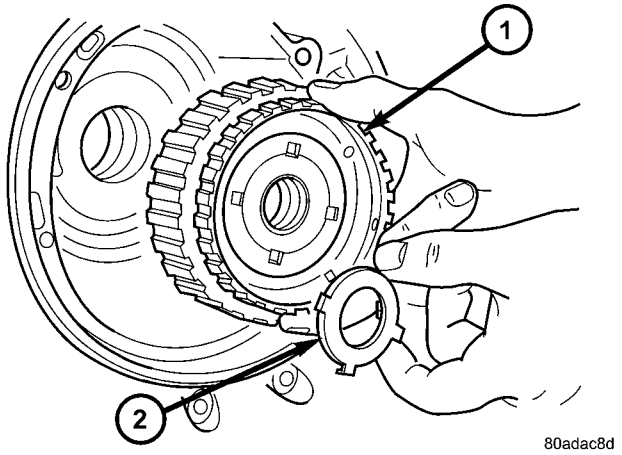

Fig. 138 Install Front Sun Gear Assembly

1 - FRONT SUN GEAR ASSEMBLY
2 - #4 THRUST WASHER (FOUR TABS)

41TE AUTOMATIC TRANSAXLE (Continued)

(52) **DETERMINING #4 THRUST PLATE THICKNESS / INPUT SHAFT END PLAY:**

(a) Select the thinnest #4 thrust plate thickness and install to input clutch assembly (Fig. 139). Use petrolatum to retain.

(b) Install input clutch assembly into position and verify that it is completely seated by viewing through input speed sensor hole. If view through input speed sensor hole is not as shown in (Fig. 140), the input clutch assembly is not seated properly.

(c) Remove oil pump o-ring (Fig. 141). **Be sure to reinstall oil pump o-ring after selecting the proper #4 thrust plate.**

(d) Install pump and gasket to transmission. Install and torque bolts.

(e) Set up input shaft for measurement with Indicator Set C3339 and End Play Set 8266 as shown in (Fig. 142).

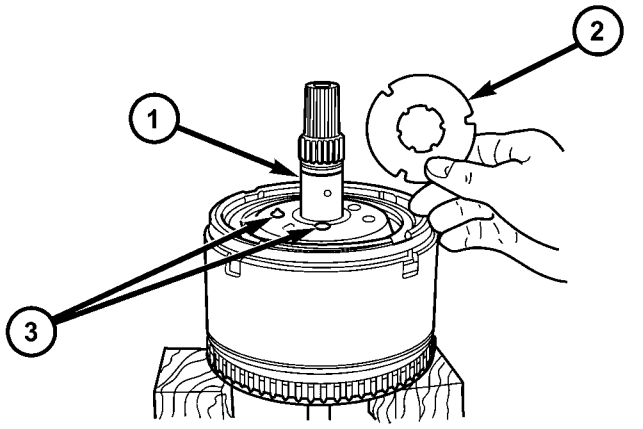

Fig. 139 Select Thinnest No. 4 Thrust Plate

1 - OVERDRIVE SHAFT ASSEMBLY
2 - #4 THRUST PLATE (SELECT)
3 - 3 DABS OF PETROLATUM FOR RETENTION

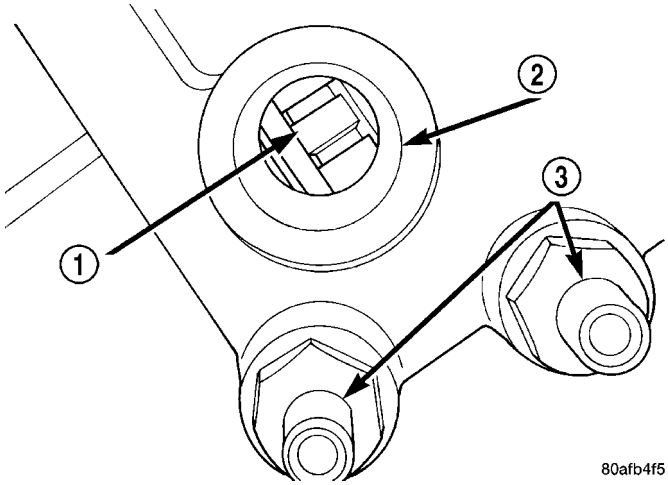

Fig. 140 View Through Input Speed Sensor Hole

1 - INPUT CLUTCH RETAINER
2 - INPUT SPEED SENSOR HOLE
3 - OIL COOLER FITTINGS

(f) Measure the input shaft end play with the transaxle in the vertical position. **Input shaft end play must be within 0.005 to 0.025 inch.** For example, if end play reading is 0.055 inch, select No. 4 Thrust Plate which is 0.071 to 0.074 thick. This should provide an input shaft end play reading of 0.020 inch which is within specifications.

(g) Refer to the No. 4 thrust plate chart to select the proper No. 4 thrust plate:

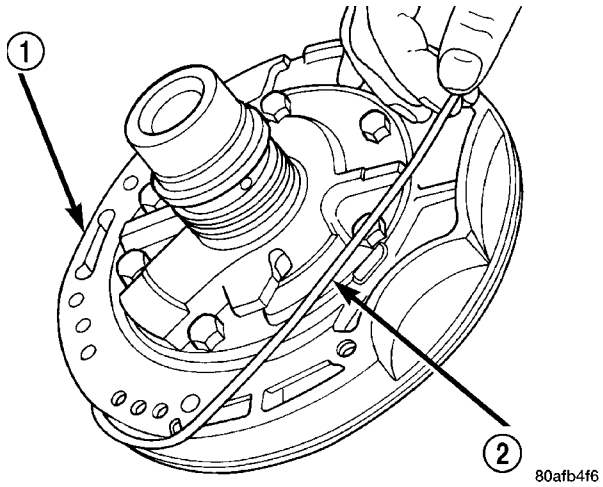

Fig. 141 Remove Oil Pump O-Ring

1 - OIL PUMP ASSEMBLY
2 - O-RING

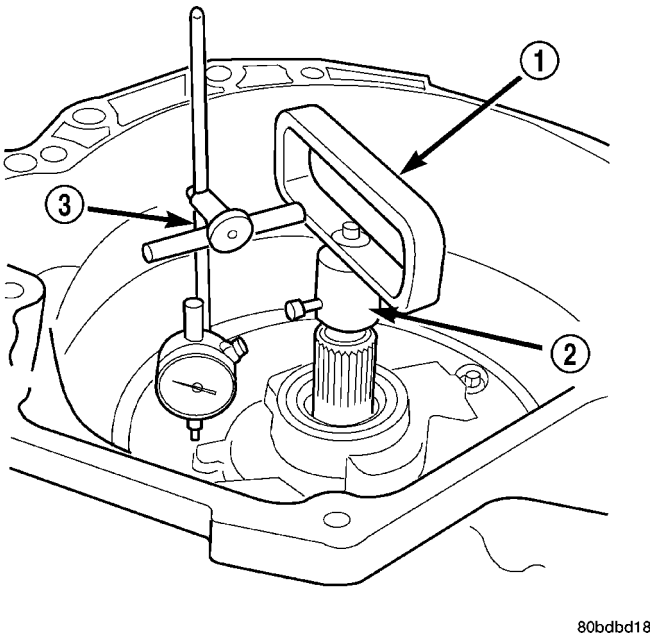

Fig. 142 Measure Input Shaft End Play Using End Play Set 8266

1 - TOOL 8266–8
2 - TOOL 8266–2
3 - TOOL C-3339

41TE AUTOMATIC TRANSAXLE (Continued)

NO. 4 THRUST PLATE CHART

PART NUMBER	THICKNESS
4431665AB	1.60mm (0.063 in.)
3836237AB	1.73mm (0.068 in.)
4431666AB	1.80mm (0.071 in.)
3836238AB	1.96mm (0.077 in.)
4431667AB	2.03mm (0.080 in.)
3836239AB	2.16mm (0.085 in.)
4431668AB	2.24mm (0.088 in.)
3836240AB	2.39mm (0.094 in.)
4431669AB	2.46mm (0.097 in.)
3836241AB	2.62mm (0.103 in.)
4446670AB	2.67mm (0.105 in.)
4446671AB	2.90mm (0.114 in.)

(53) Install input clutch assembly (Fig. 143).

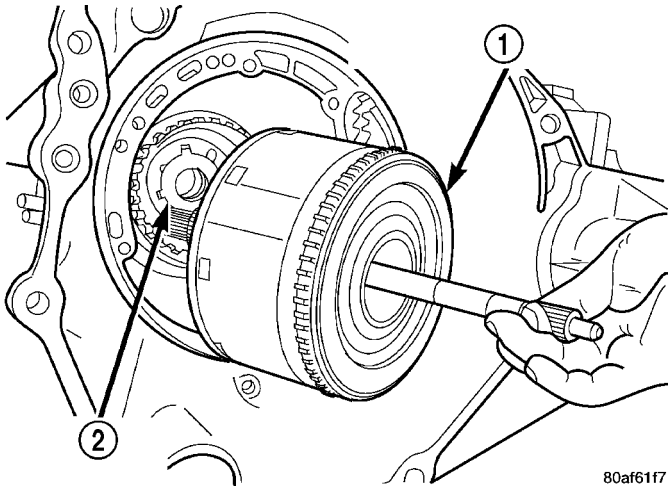

Fig. 143 Install Input Clutch Assembly

1 - INPUT CLUTCH ASSEMBLY
2 - #4 THRUST WASHER

(54) Install #1 caged needle bearing (Fig. 144).

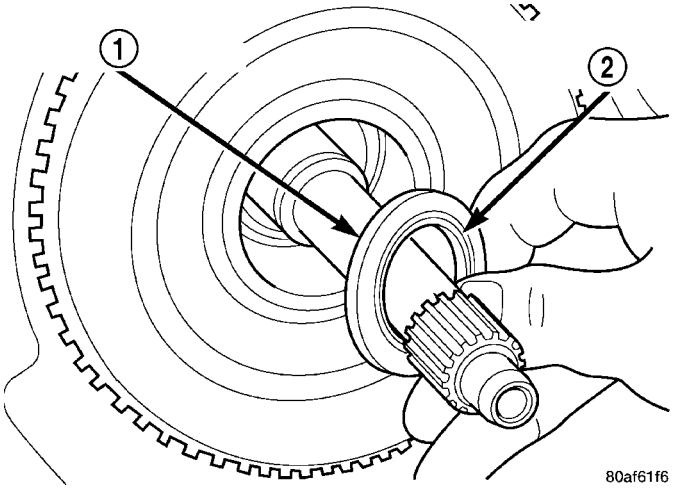

Fig. 144 Install Caged Needle Bearing

1 - #1 CAGED NEEDLE BEARING
2 - NOTE: TANGED SIDE OUT

CAUTION: The cooler bypass valve must be replaced if transaxle failure has occurred. Do not attempt to reuse or clean old valve.

(55) Install cooler bypass valve with o-ring end towards rear of case (Fig. 145).

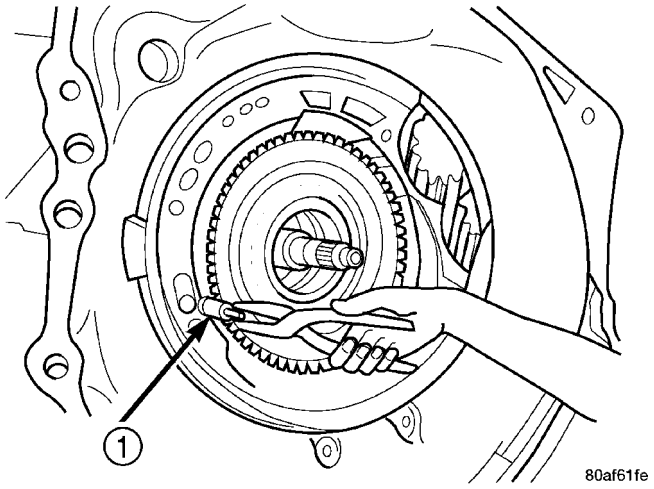

Fig. 145 Install Cooler Bypass Valve

1 - COOLER BYPASS VALVE

41TE AUTOMATIC TRANSAXLE (Continued)

(56) Install oil pump gasket (Fig. 146).

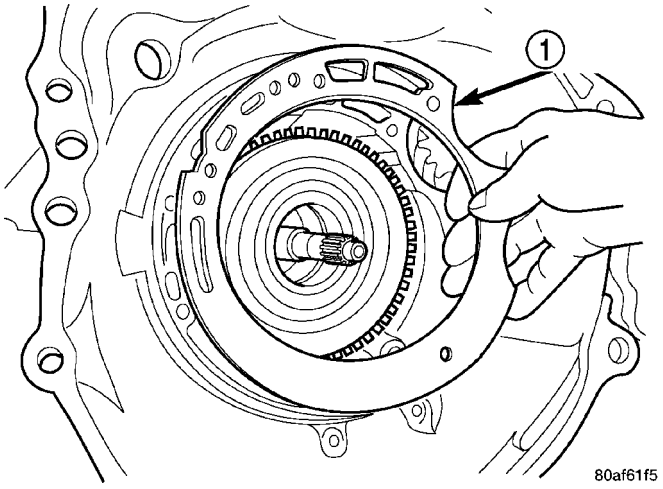

Fig. 146 Install Oil Pump Gasket

1 - PUMP GASKET

(57) Install oil pump assembly (Fig. 147).

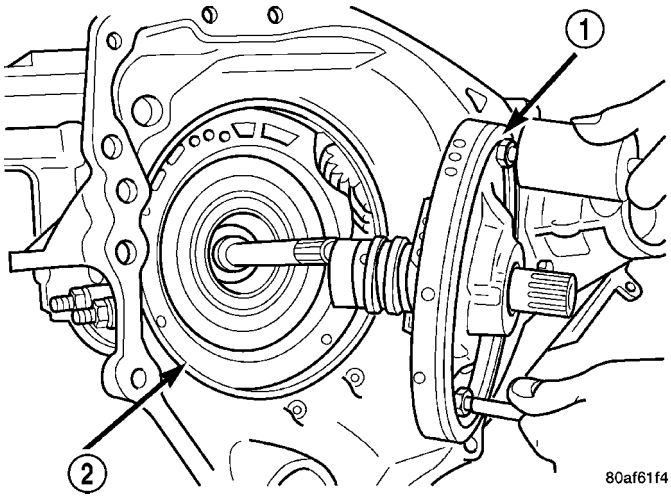

Fig. 147 Install Oil Pump

1 - OIL PUMP
2 - GASKET

(58) Install oil pump-to-case bolts and torque to 27 N·m (20 ft. lbs.) (Fig. 148).

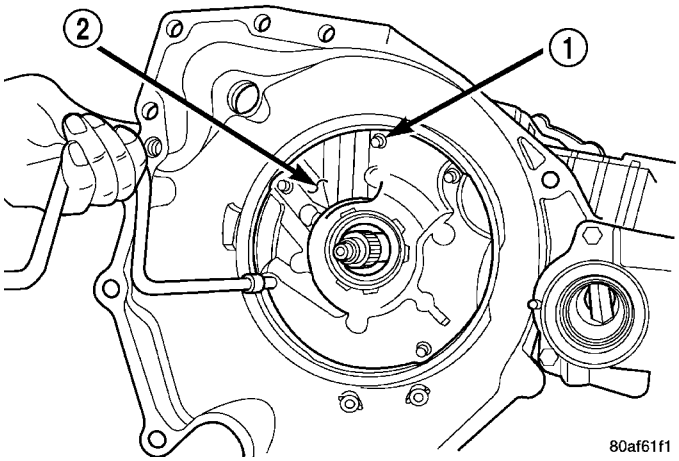

Fig. 148 Install Pump-to-Case Bolts

1 - PUMP ATTACHING BOLTS
2 - PUMP HOUSING

(59) Install low/reverse accumulator (Fig. 149).

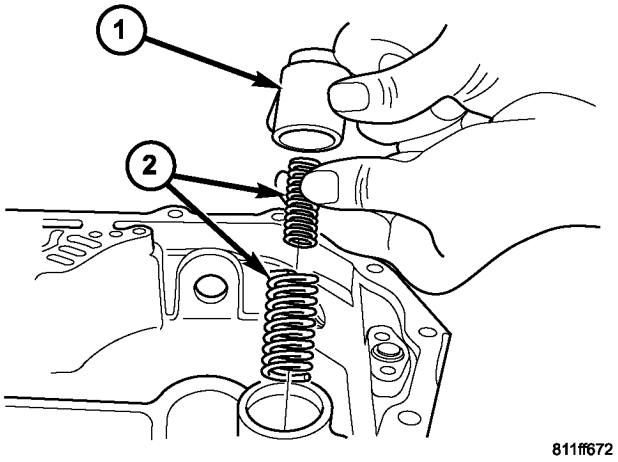

Fig. 149 Low/Reverse Accumulator

1 - PISTON
2 - RETURN SPRINGS

41TE AUTOMATIC TRANSAXLE (Continued)

(60) Install low/reverse accumulator plug (Fig. 150).

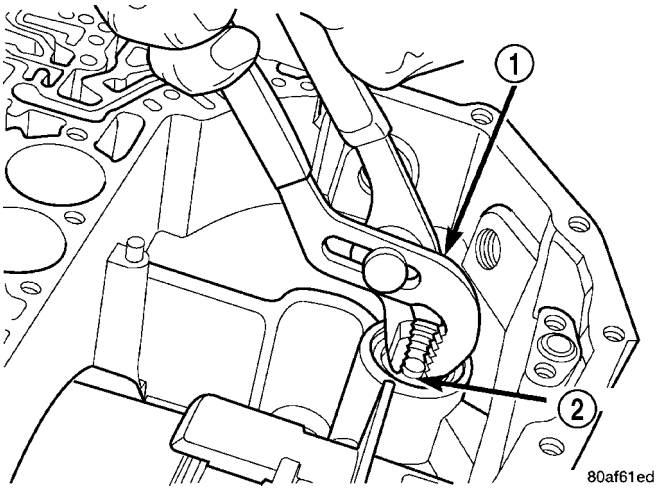

Fig. 150 Install Low/Reverse Accumulator Plug (Cover)

1 - ADJUSTABLE PLIERS
2 - PLUG

(61) Install low/reverse accumulator snap ring (Fig. 151).

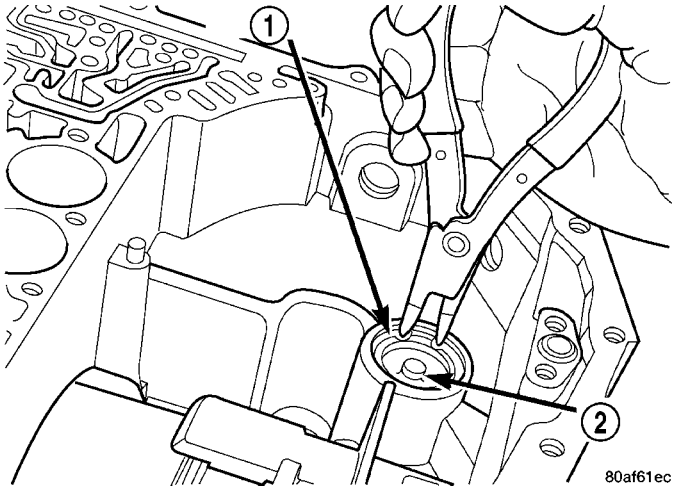

Fig. 151 Install Low/Reverse Accumulator Snap Ring

1 - SNAP RING
2 - PLUG

NOTE: Depending on engine application, some accumulators will have two springs, and others will have one spring. The springs are color-coded for application and year.

(62) Install underdrive and overdrive accumulators (Fig. 152).

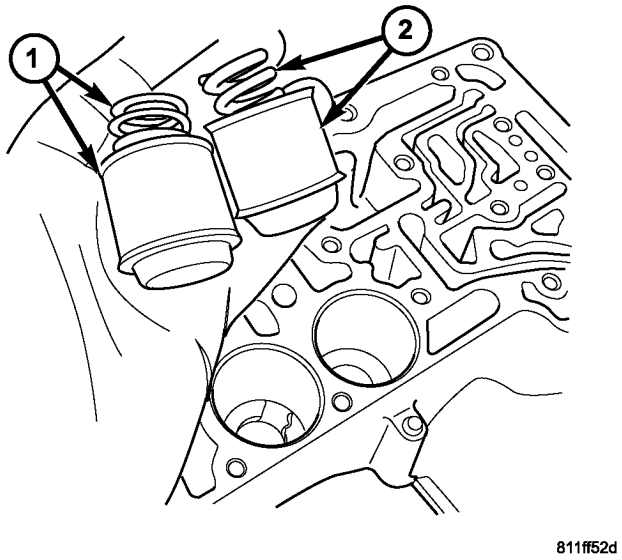

Fig. 152 Underdrive and Overdrive Accumulators

1 - OVERDRIVE PISTON AND SPRING
2 - UNDERDRIVE PISTON AND SPRING

(63) Install valve body to transaxle (Fig. 153). Rotate manual valve shaft fully clockwise to ease installation. Make sure park rod rollers are positioned within park guide bracket.

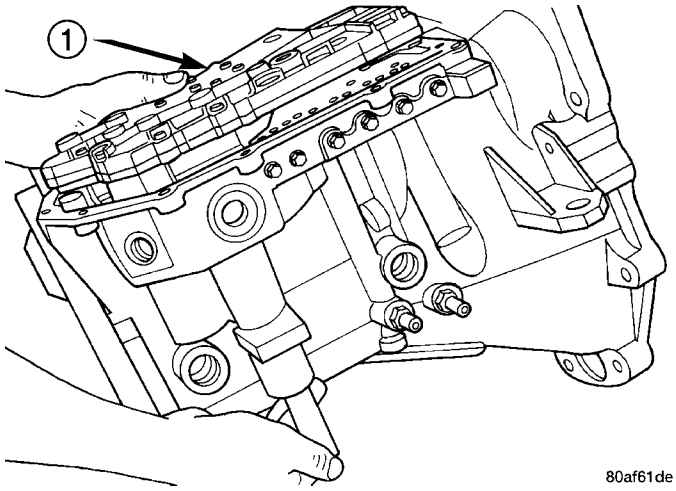

Fig. 153 Install Valve Body

1 - VALVE BODY

41TE AUTOMATIC TRANSAXLE (Continued)

(64) Install and torque valve body-to-case bolts to 12 N·m (105 in. lbs.) (Fig. 154).

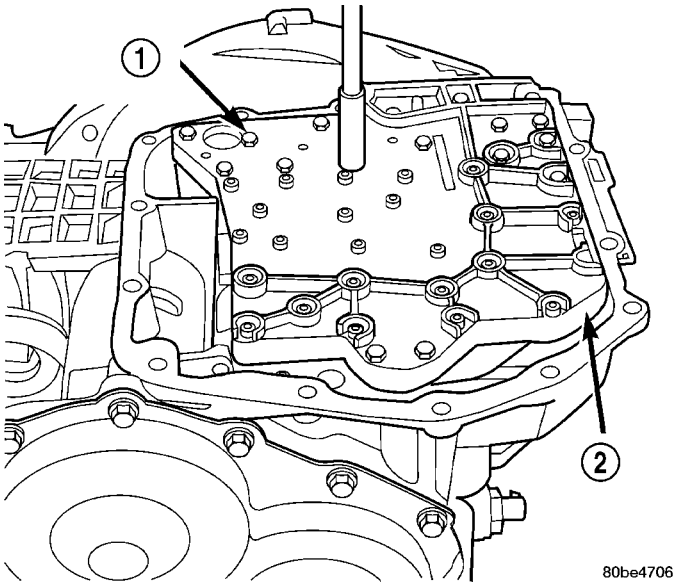

Fig. 154 Install Valve Body-to-Case Bolts

1 - VALVE BODY ATTACHING BOLTS (18)
2 - VALVE BODY

(65) Install oil filter and new o-ring (Fig. 155).

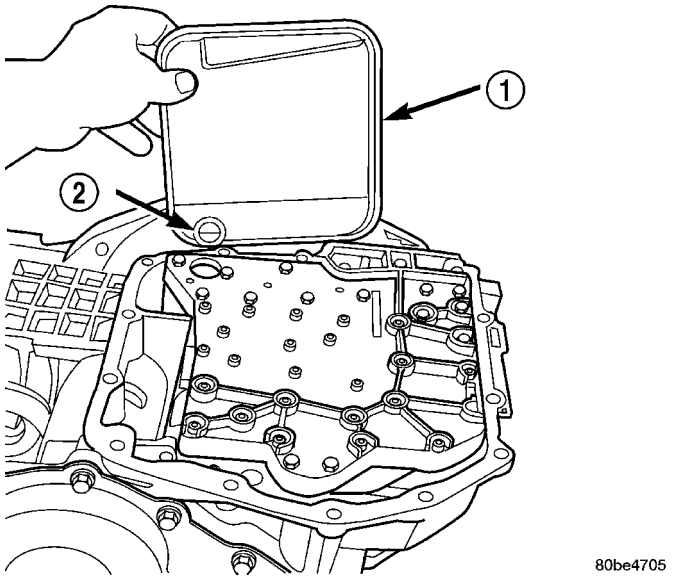

Fig. 155 Install Oil Filter

1 - OIL FILTER
2 - O-RING

(66) Apply an 1/8" bead of Mopar® ATF RTV (MS-GF41) to oil pan and immediately install to case (Fig. 156).

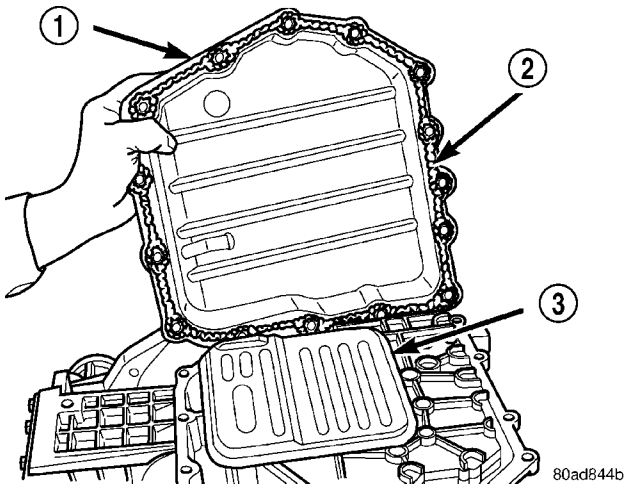

Fig. 156 Install Oil Pan

1 - OIL PAN
2 - 1/8 INCH BEAD OF MOPAR® ATF RTV (MS-GF41)
3 - OIL FILTER

(67) Install oil pan-to-case bolts and torque to 19 N·m (165 in. lbs.).

(68) Install solenoid/pressure switch assembly and gasket to case (Fig. 157).

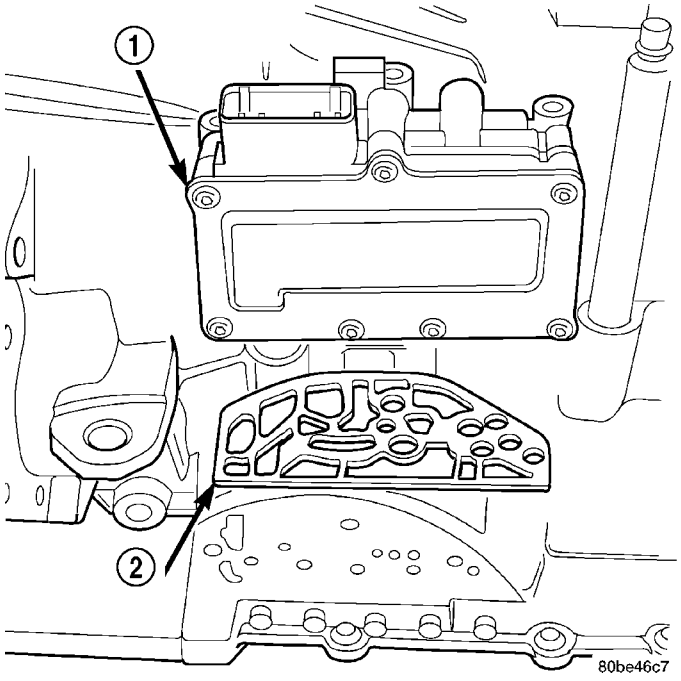

Fig. 157 Solenoid/Pressure Switch Assembly and Gasket

1 - SOLENOID/PRESSURE SWITCH ASSEMBLY
2 - GASKET

(69) Install and tighten solenoid/pressure switch assembly-to-transaxle case bolts to 12 N·m (110 in. lbs.) (Fig. 158).

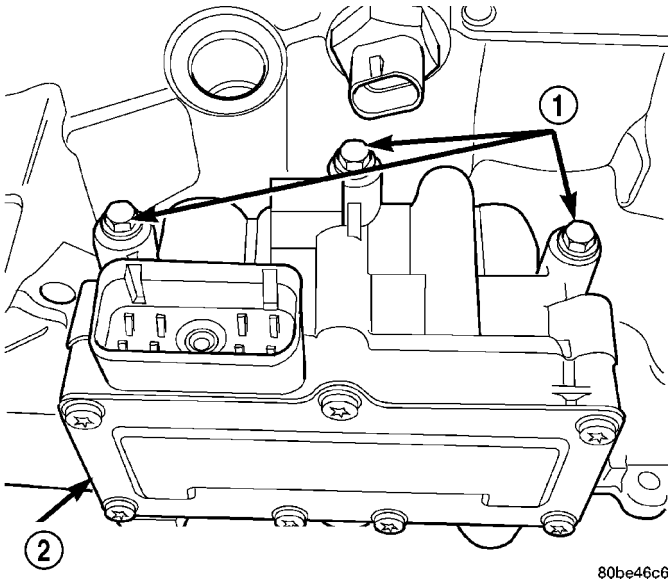

Fig. 158 Solenoid Pack-to-Transaxle Bolts

1 - BOLTS
2 - SOLENOID AND PRESSURE SWITCH ASSEMBLY

(70) Install and torque input and output speed sensors to case to 27 N·m (20 ft. lbs.).

INSTALLATION

NOTE: If transaxle assembly has been replaced or overhauled (clutch and/or seal replacement), it is necessary to perfrom the "Quick-Learn" procedure. (Refer to 8 - ELECTRICAL/ELECTRONIC CONTROL MODULES/TRANSMISSION CONTROL MODULE - STANDARD PROCEDURE)

(1) Using a transmission jack and a helper, position transaxle assembly to engine. Install and torque bellhousing bolts to 95 N·m (70 ft. lbs.).

(2) Install upper mount assembly to transaxle and torque bolts to 54 N·m (40 ft. lbs.) (Fig. 159).

(3) Raise engine/transaxle assembly into position. Install and torque upper mount-to-bracket thru-bolt to 75 N·m (55 ft. lbs.) (Fig. 159).

(4) Remove transmission jack and screw jack.

(5) Secure left wheelhouse splash shield.

(6) Install torque converter-to-drive plate bolts and torque to 88 N·m (65 ft. lbs.)

(7) Install inspection cover.

(8) Install lateral bending brace.

(9) Install starter motor.

(10) Install front mount/bracket assembly.

(11) Align and install rear mount bracket-to-case bolts by hand (Fig. 160). Torque horizontal bolt to 102 N·m (75 ft. lbs.).

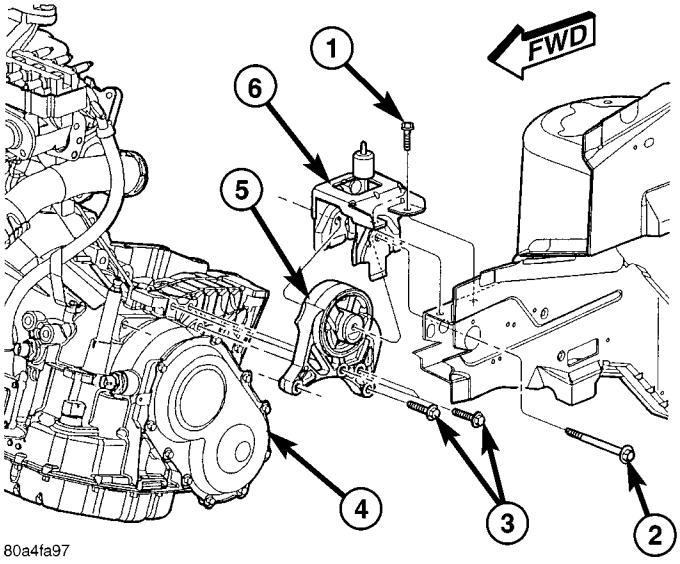

Fig. 159 Left Mount to Bracket and Transaxle

1 - BOLT - BRACKET TO FRAME RAIL 68 N·m (50 ft. lbs.)
2 - BOLT - MOUNT TO RAIL THRU 75 N·m (55 ft. lbs.)
3 - BOLT - LEFT MOUNT TO TRANSAXLE 54 N·m (40 ft. lbs.)
4 - TRANSAXLE
5 - MOUNT - LEFT
6 - BRACKET - LEFT MOUNT

(12) AWD models: Install power transfer unit. (Refer to 21 - TRANSMISSION/TRANSAXLE/ POWER TRANSFER UNIT - INSTALLATION)

(13) Install left and right halfshaft assemblies. (Refer to 3 - DIFFERENTIAL & DRIVELINE/HALF SHAFT - INSTALLATION)

(14) Install front wheel/tire assemblies.

(15) Lower vehicle.

(16) Torque remaining rear mount bracket-to-transaxle vertical bolts (Fig. 160) to 102 N·m (75 ft. lbs.).

(17) Install transaxle upper bellhousing-to-block bolts and torque to 95 N·m (70 ft. lbs.).

(18) Install and connect crank position sensor (if equipped).

(19) Connect gearshift cable to upper mount bracket and transaxle manual valve lever (Fig. 161).

(20) Connect solenoid/pressure switch assembly (Fig. 162).

(21) Connect transmission range sensor connector (Fig. 162).

(22) Connect input and output speed sensor connectors (Fig. 162).

(23) Remove plugs and connect transaxle oil cooler lines. (Refer to 7 - COOLING/TRANSMISSION - STANDARD PROCEDURE)

(24) Remove plug and Install fluid level indicator/ tube assembly.

41TE AUTOMATIC TRANSAXLE (Continued)

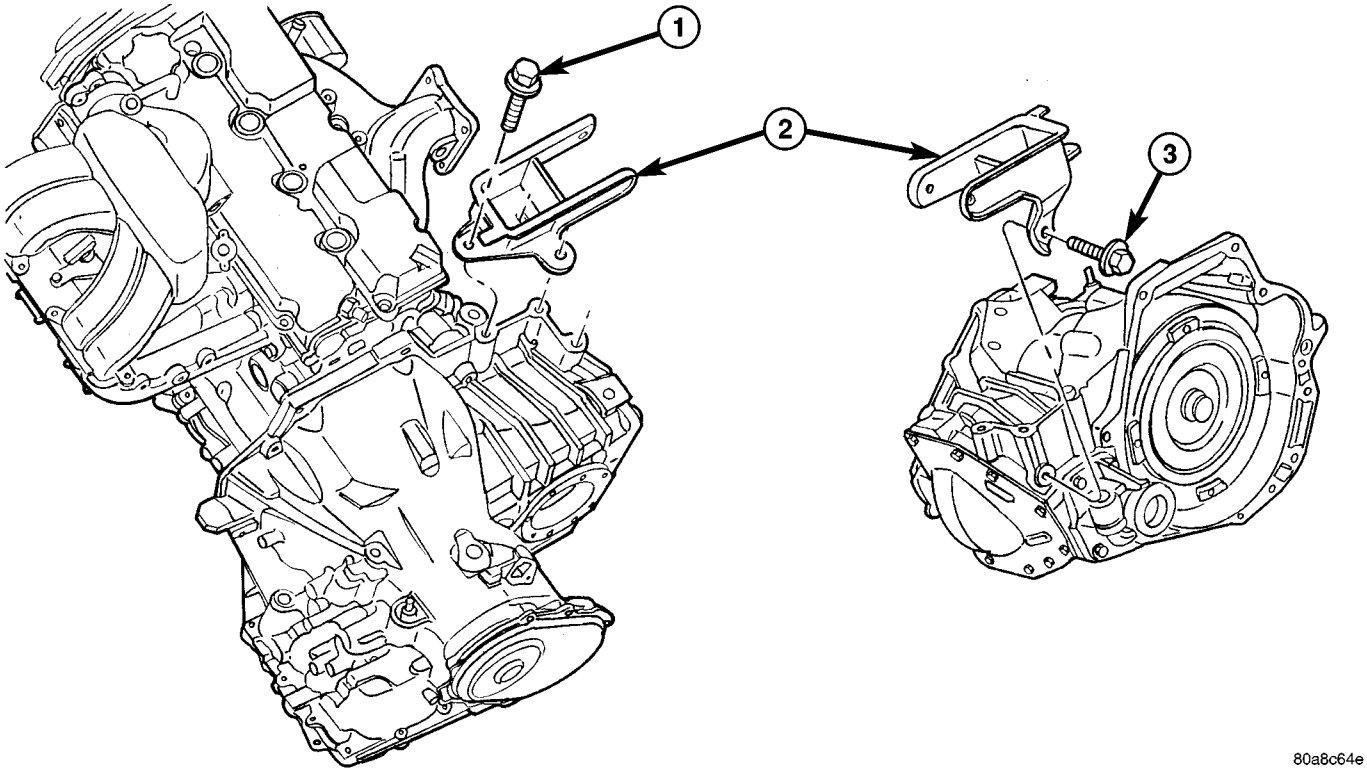

Fig. 160 Rear Mount Bracket - Typical

1 - BOLT - VERTICAL 102 N·m (75 ft. lbs.)
2 - BRACKET - REAR MOUNT
3 - BOLT - HORIZONTAL 102 N·m (75 ft. lbs.)

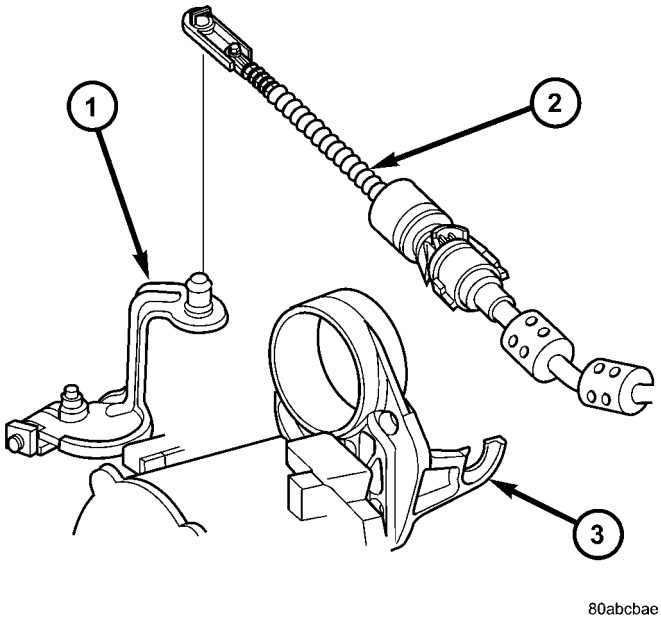

Fig. 161 Gearshift Cable at Transaxle - Typical

1 - MANUAL VALVE LEVER
2 - GEAR SHIFT CABLE
3 - UPPER MOUNT BRACKET

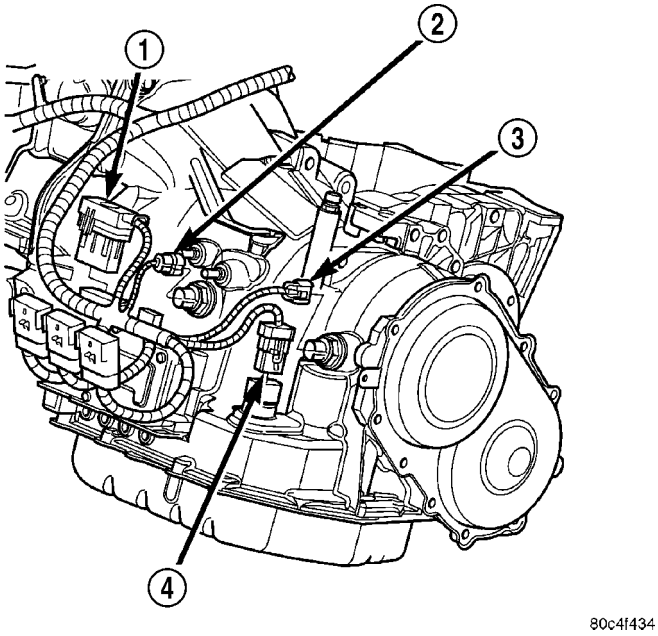

Fig. 162 Component Connector Location - Typical

1 - SOLENOID/PRESSURE SWITCH ASSY. CONNECTOR
2 - INPUT SPEED SENSOR CONNECTOR
3 - OUTPUT SPEED SENSOR CONNECTOR
4 - TRANSMISSION RANGE SENSOR CONNECTOR

41TE AUTOMATIC TRANSAXLE (Continued)

(25) Install coolant recovery bottle (Fig. 163).

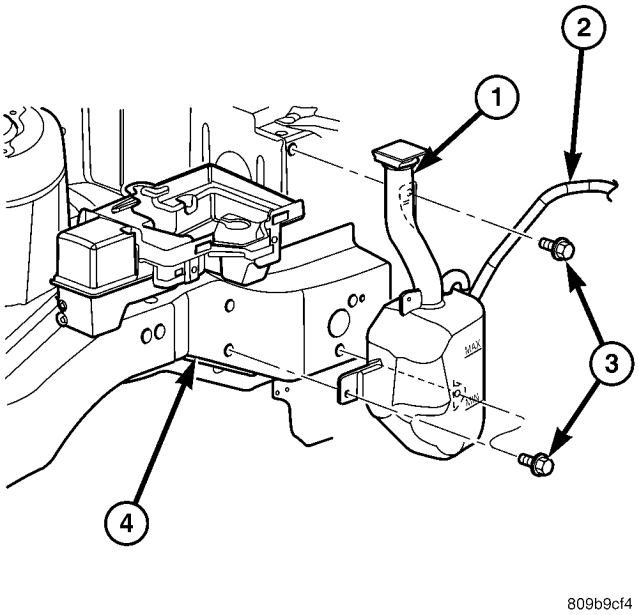

Fig. 163 Coolant Recovery Bottle

1 - COOLANT RECOVERY CONTAINER
2 - HOSE
3 - BOLT
4 - SUB FRAME RAIL

(26) Install battery shield.

(27) Connect battery cables.

(28) Fill transaxle with suitable amount of ATF+4 (Automatic Transmission Fluid—Type 9602). (Refer to 21 - TRANSMISSION/TRANSAXLE/AUTOMATIC - 41TE/FLUID - STANDARD PROCEDURE)

41TE AUTOMATIC TRANSAXLE (Continued)

SCHEMATICS AND DIAGRAMS

4XTE TRANSAXLE HYDRAULIC SCHEMATICS

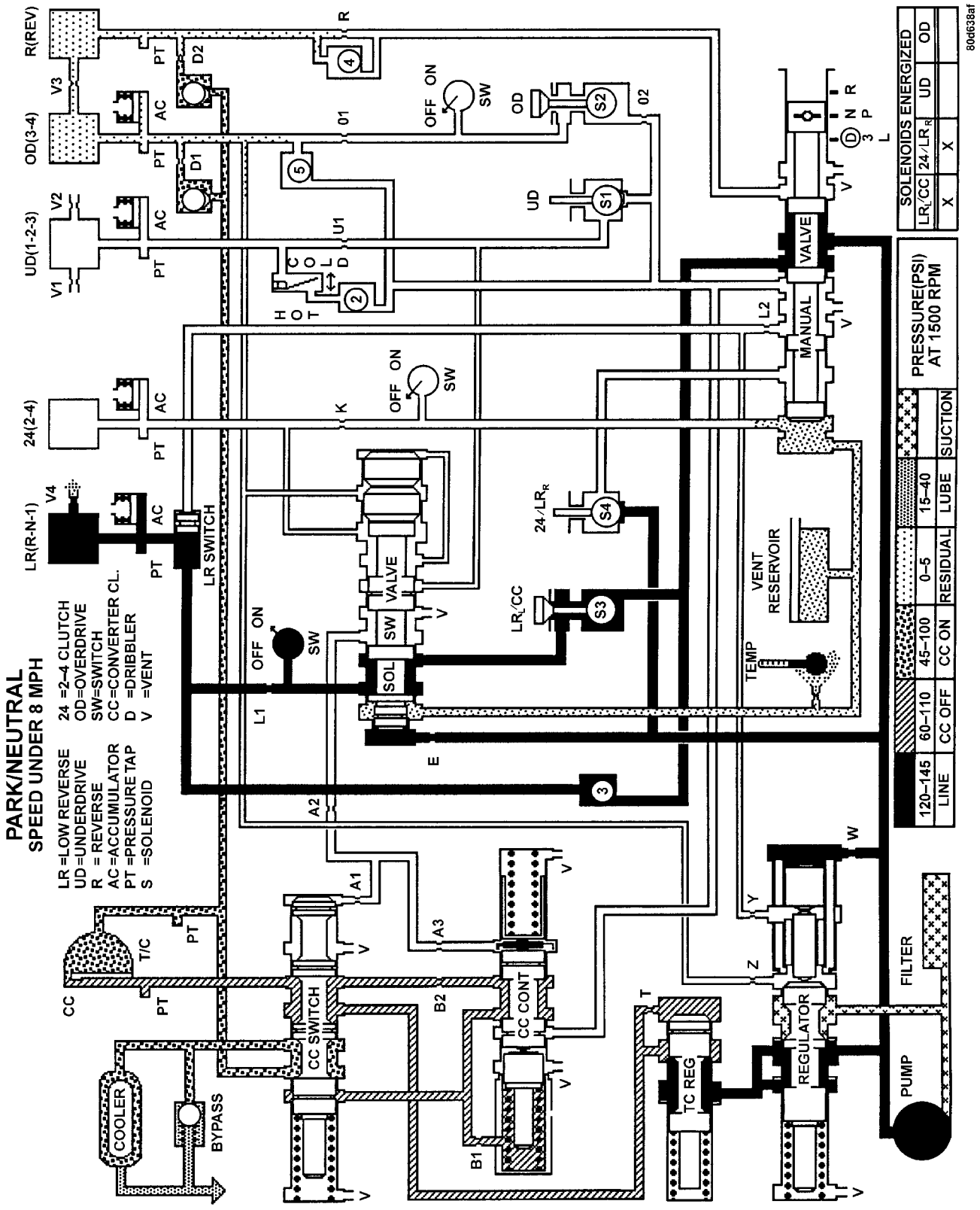

Park/Neutral (Speed Under 8 MPH)

41TE AUTOMATIC TRANSAXLE (Continued)

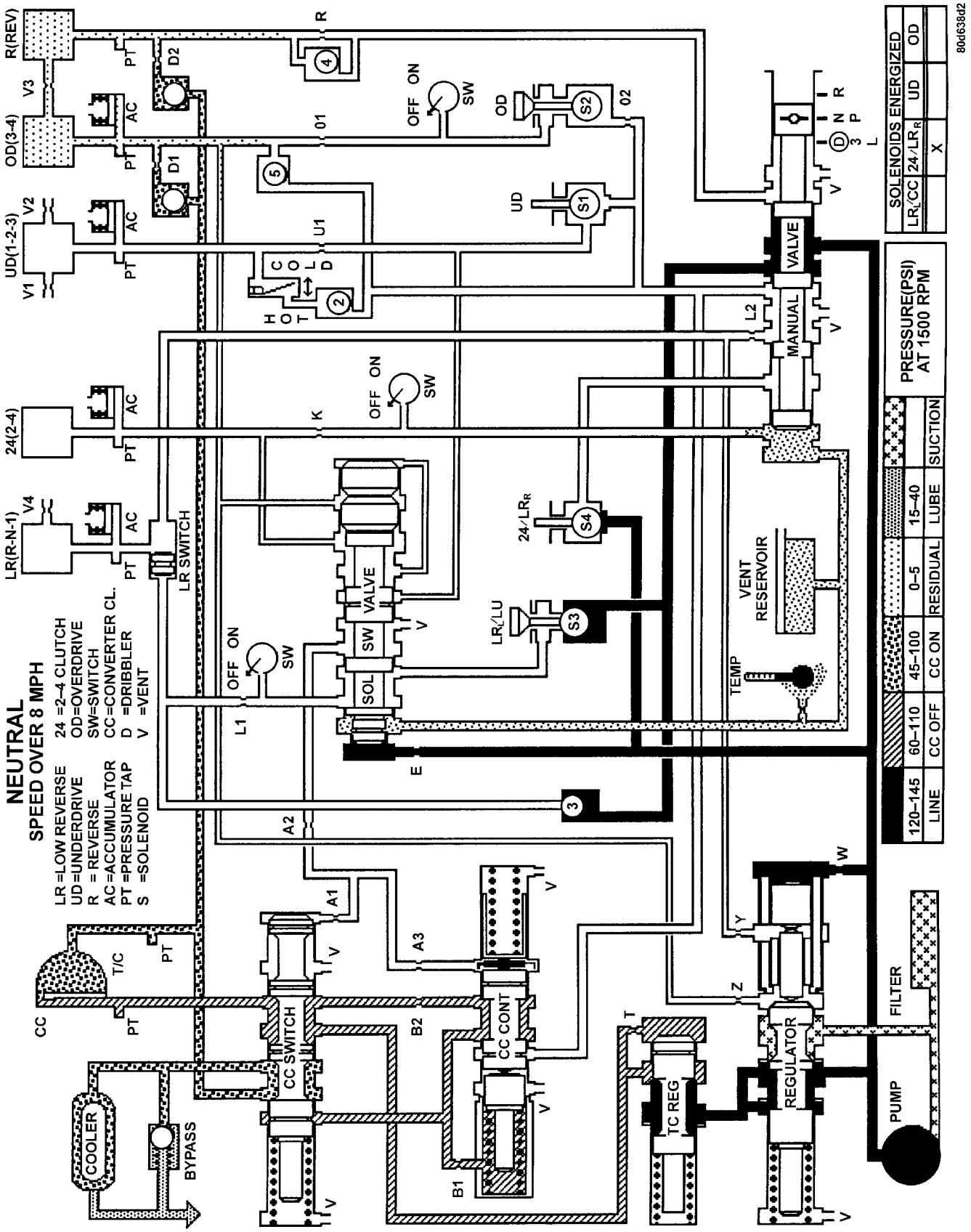

Neutral (Speed Over 8 MPH)

41TE AUTOMATIC TRANSAXLE (Continued)

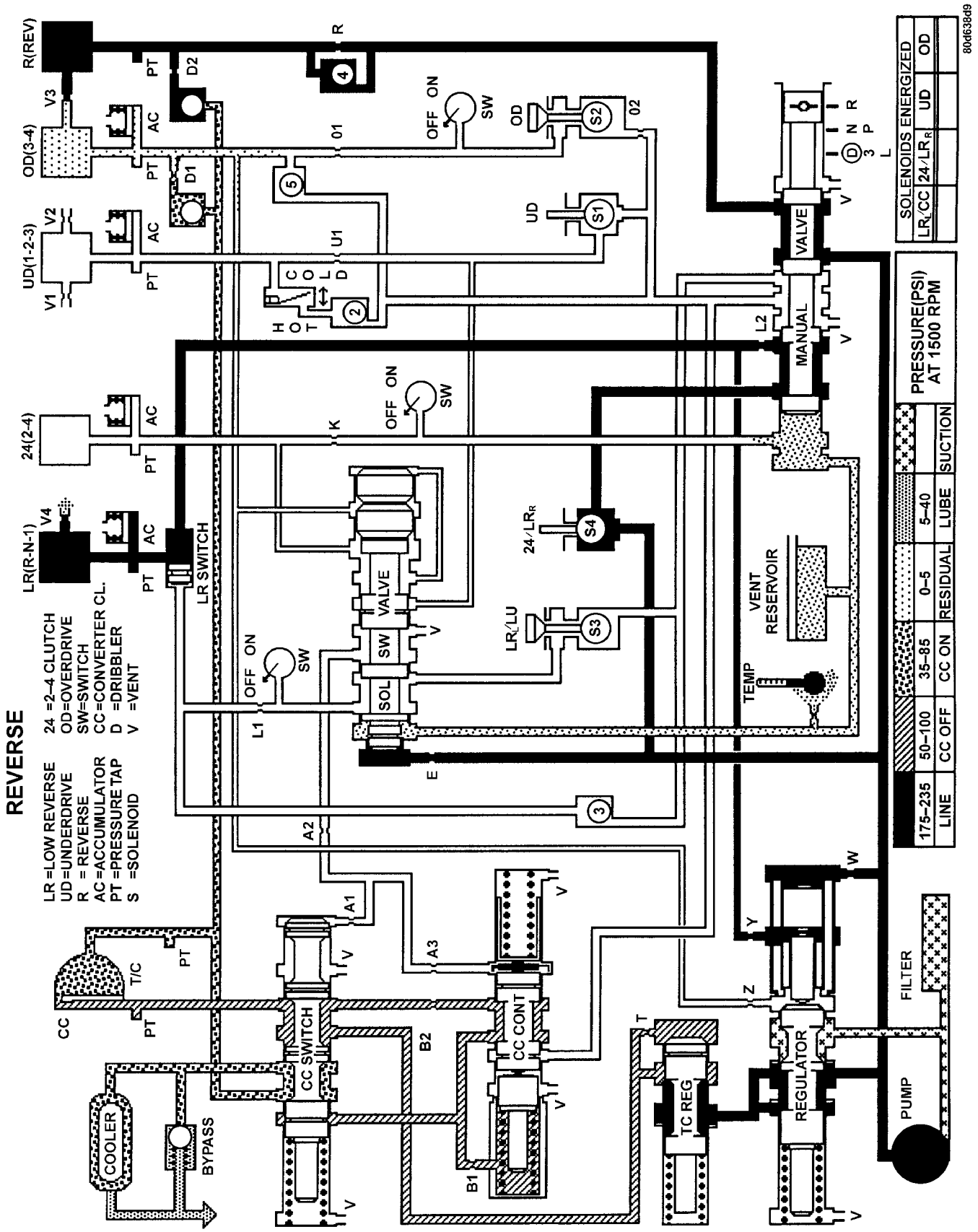

41TE AUTOMATIC TRANSAXLE (Continued)

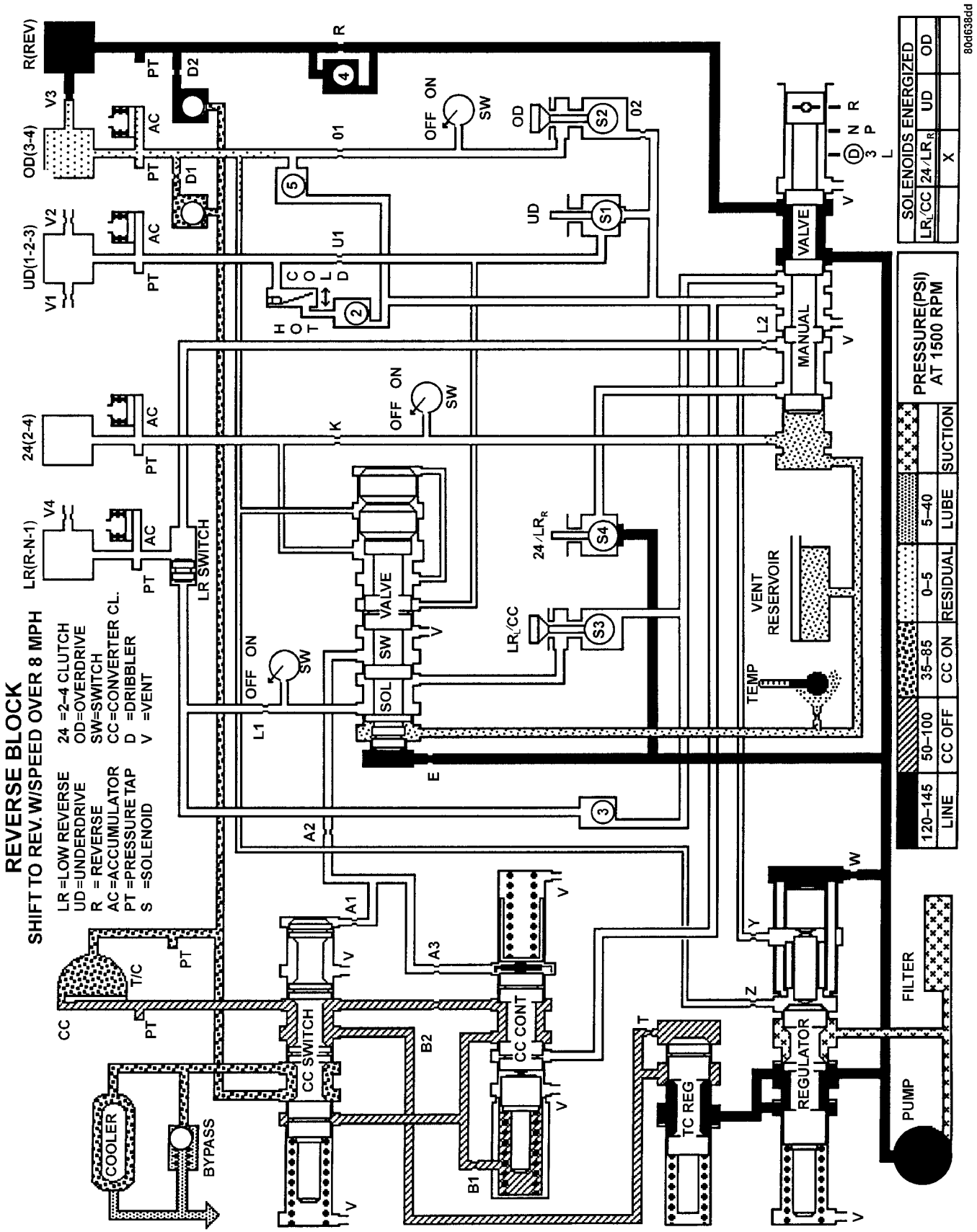

Reverse Block (Shift to Reverse W/Speed Over 8 mph)

41TE AUTOMATIC TRANSAXLE (Continued)

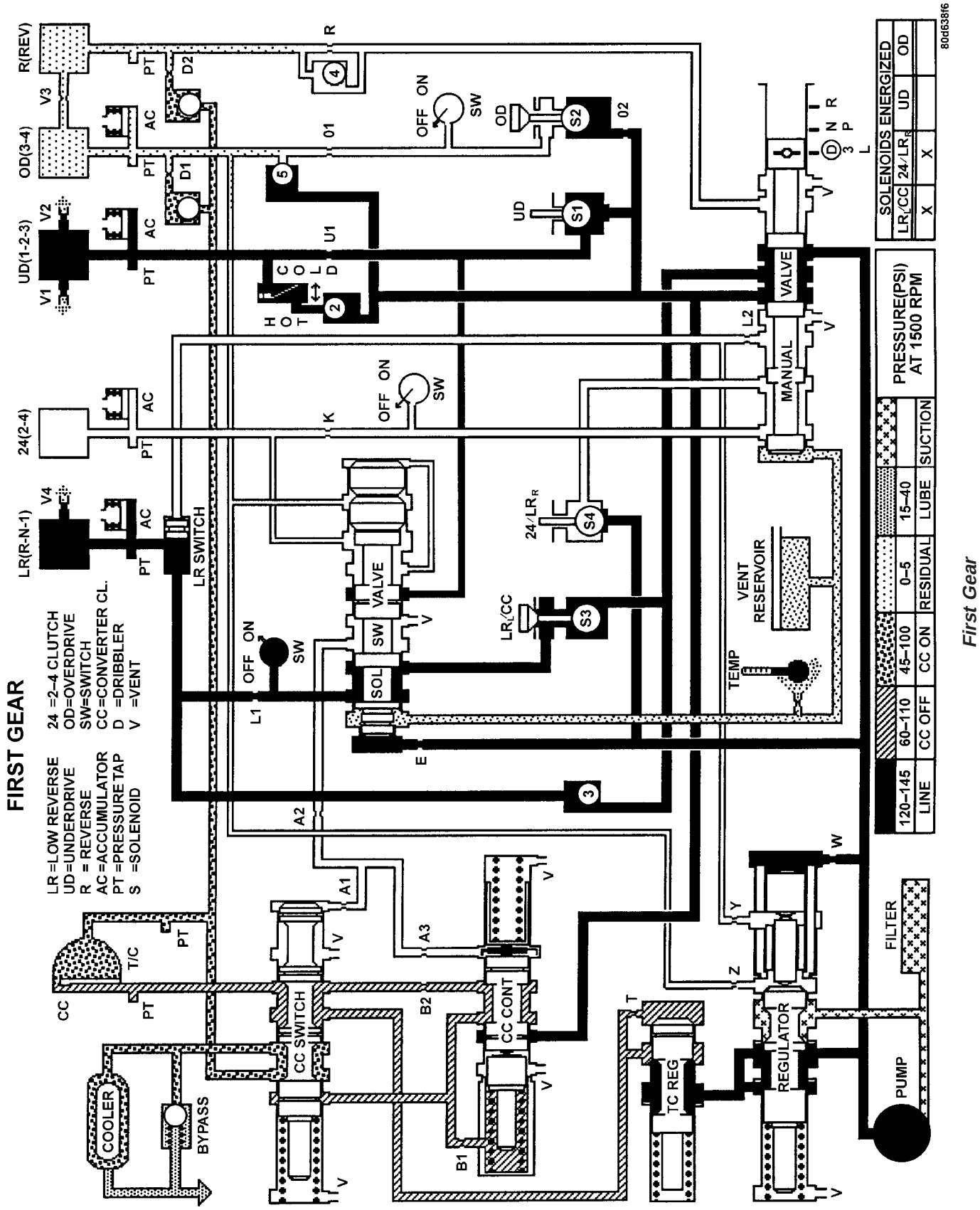

First Gear

41TE AUTOMATIC TRANSAXLE (Continued)

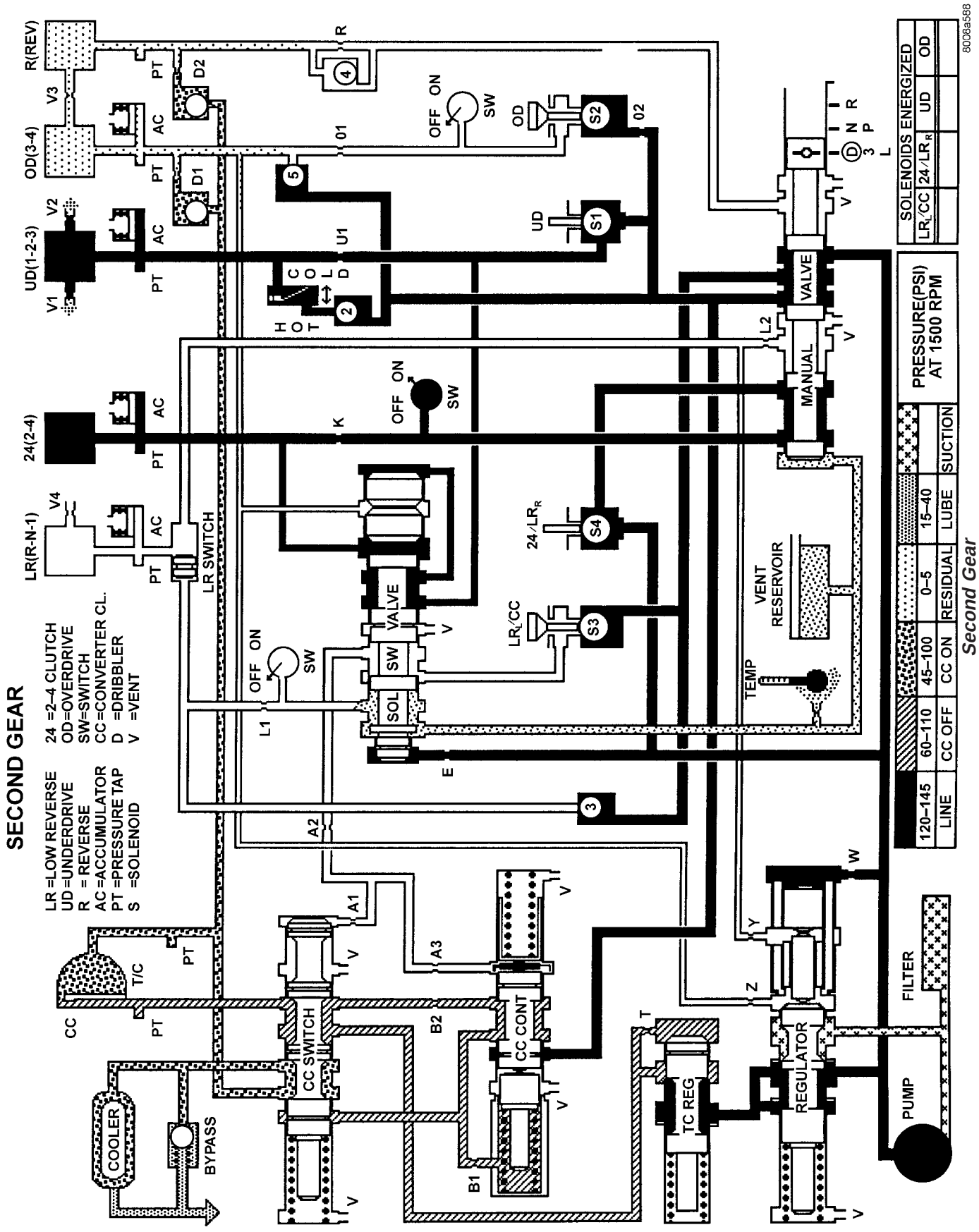

41TE AUTOMATIC TRANSAXLE (Continued)

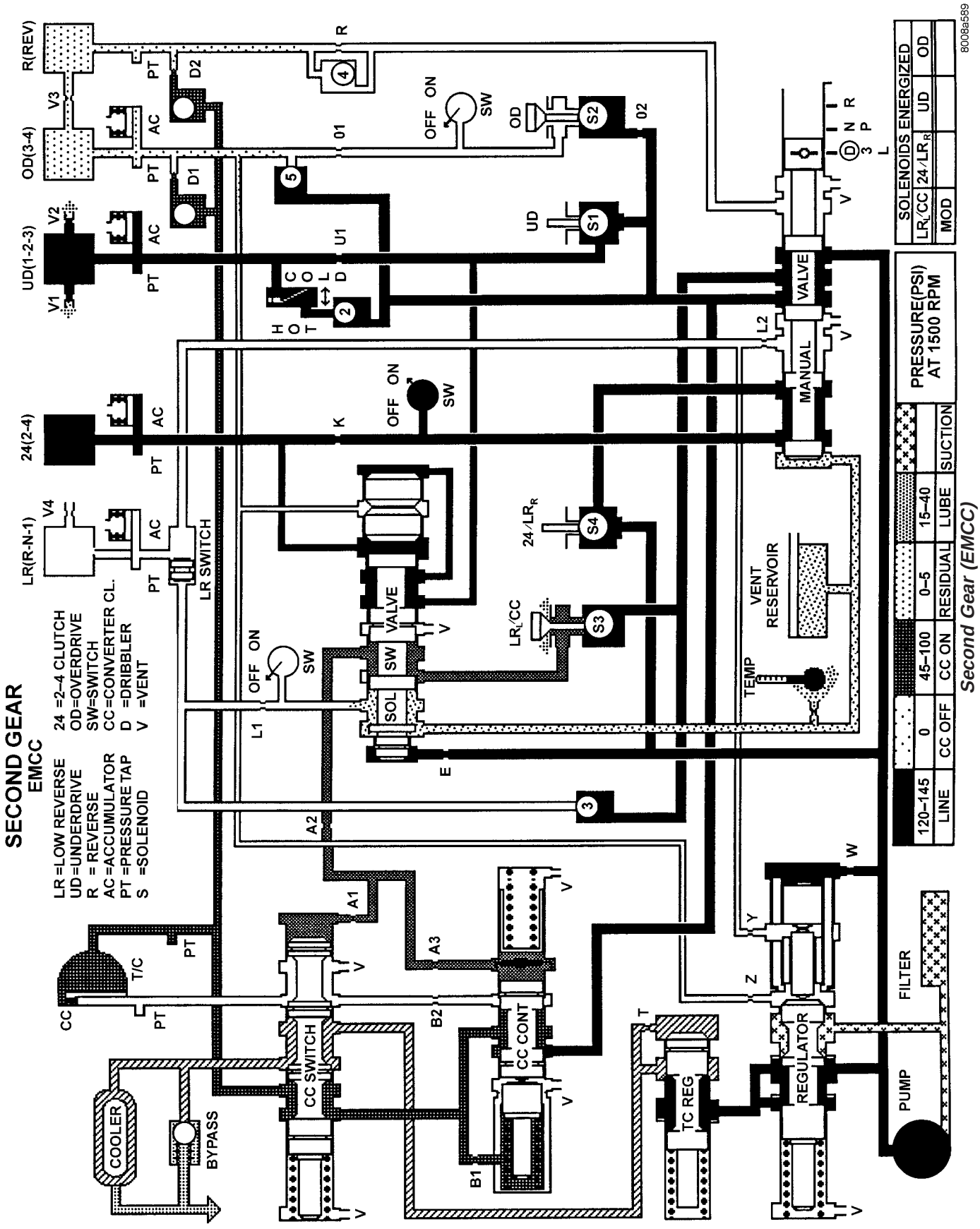

41TE AUTOMATIC TRANSAXLE (Continued)

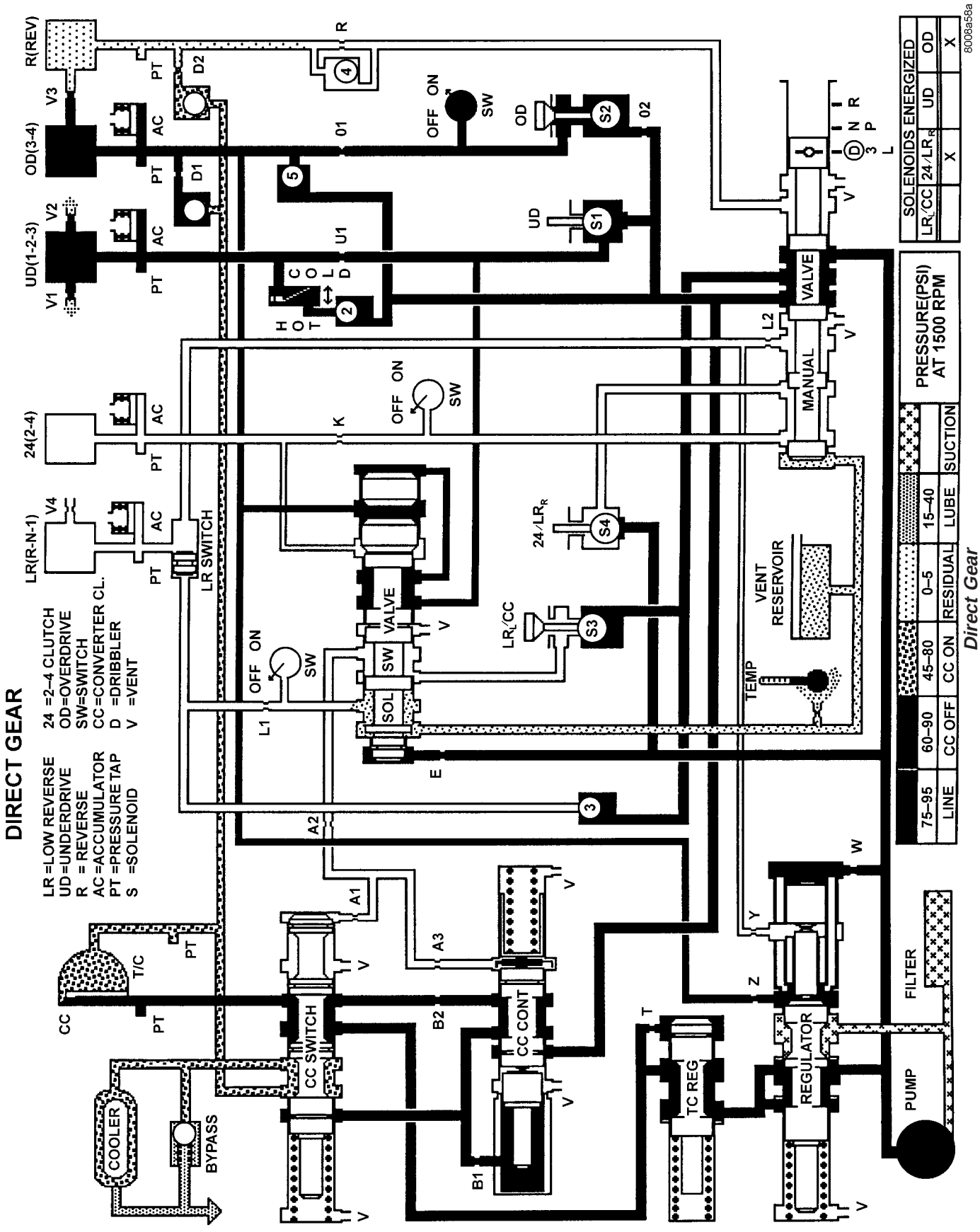

41TE AUTOMATIC TRANSAXLE (Continued)

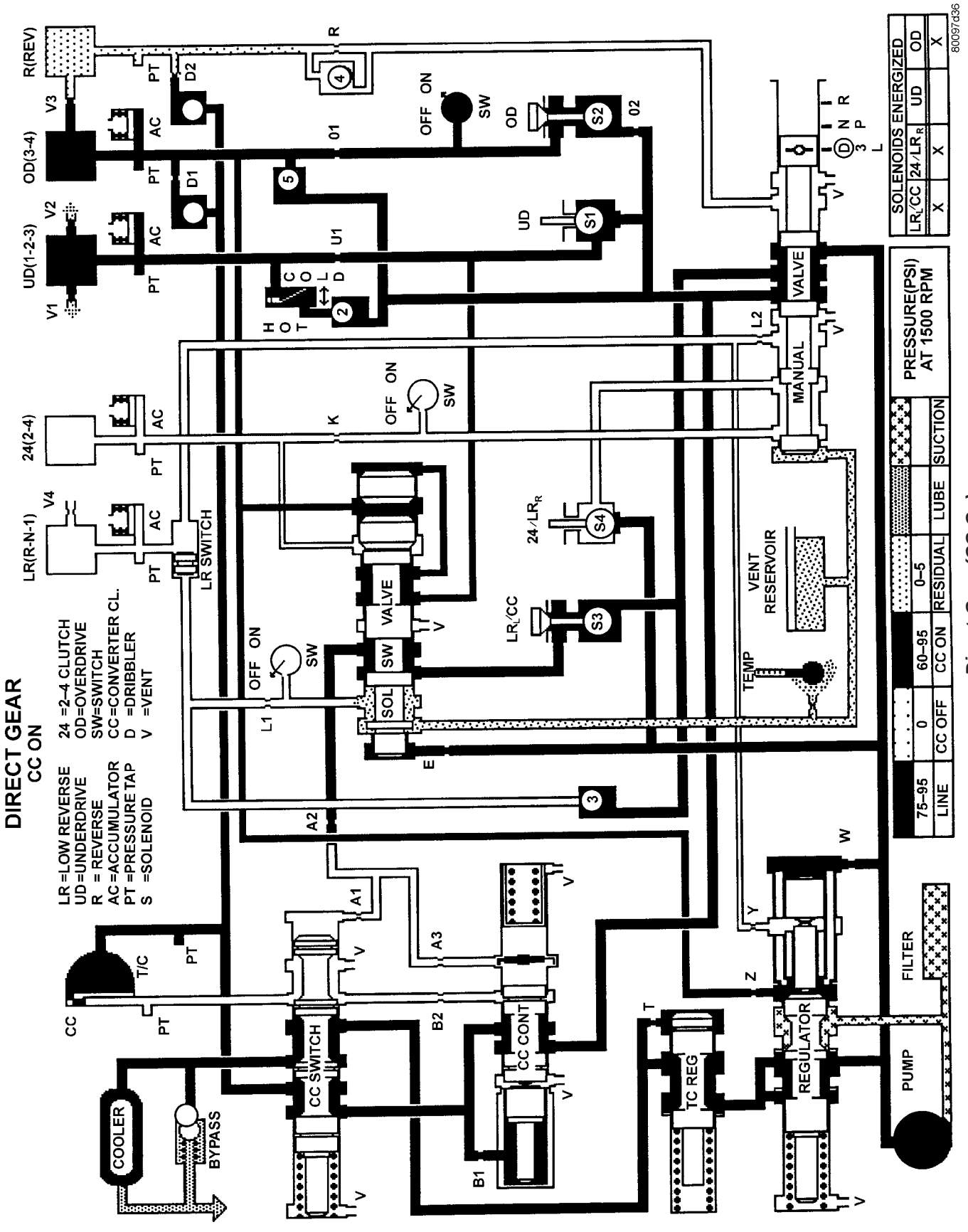

41TE AUTOMATIC TRANSAXLE (Continued)

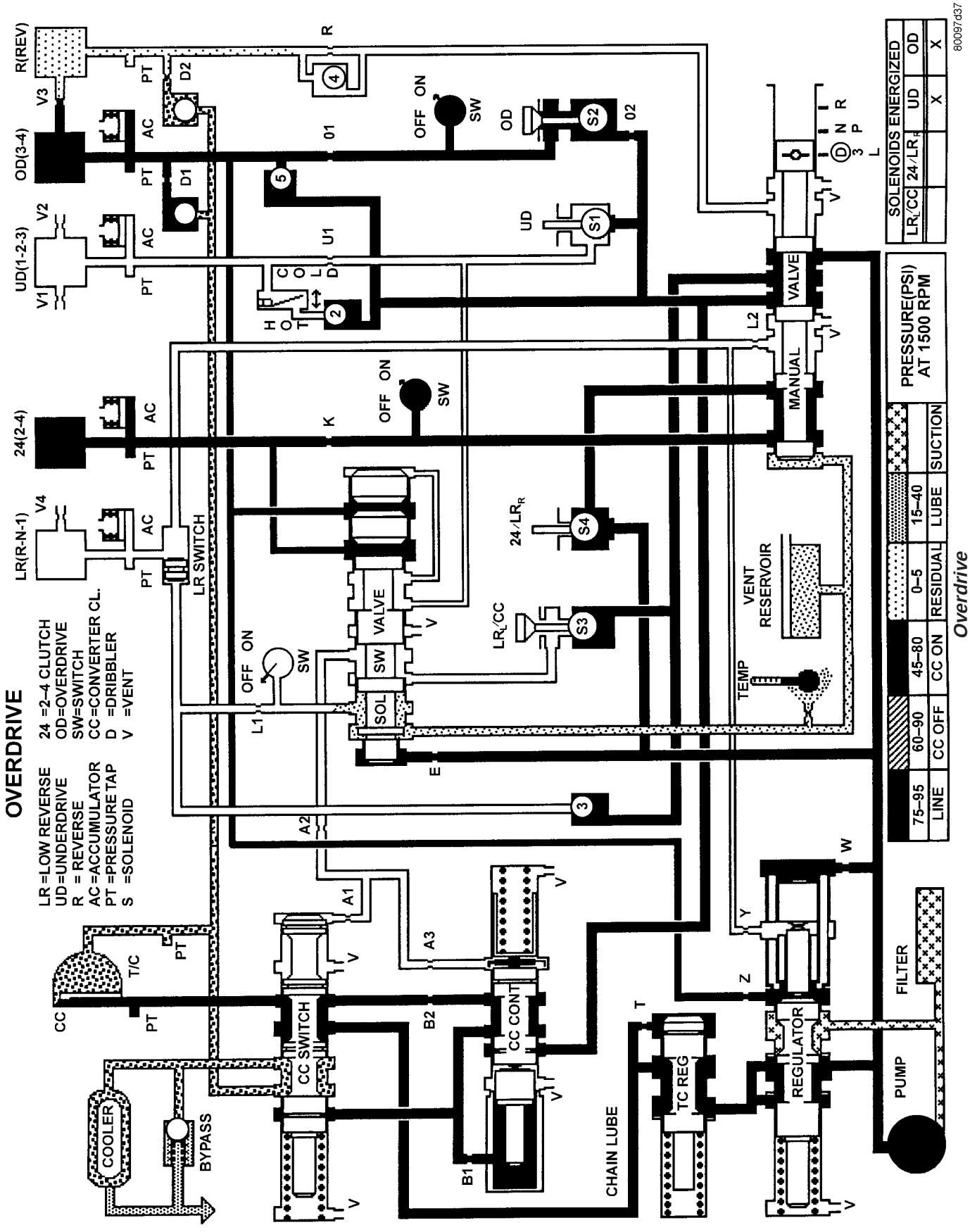

41TE AUTOMATIC TRANSAXLE (Continued)

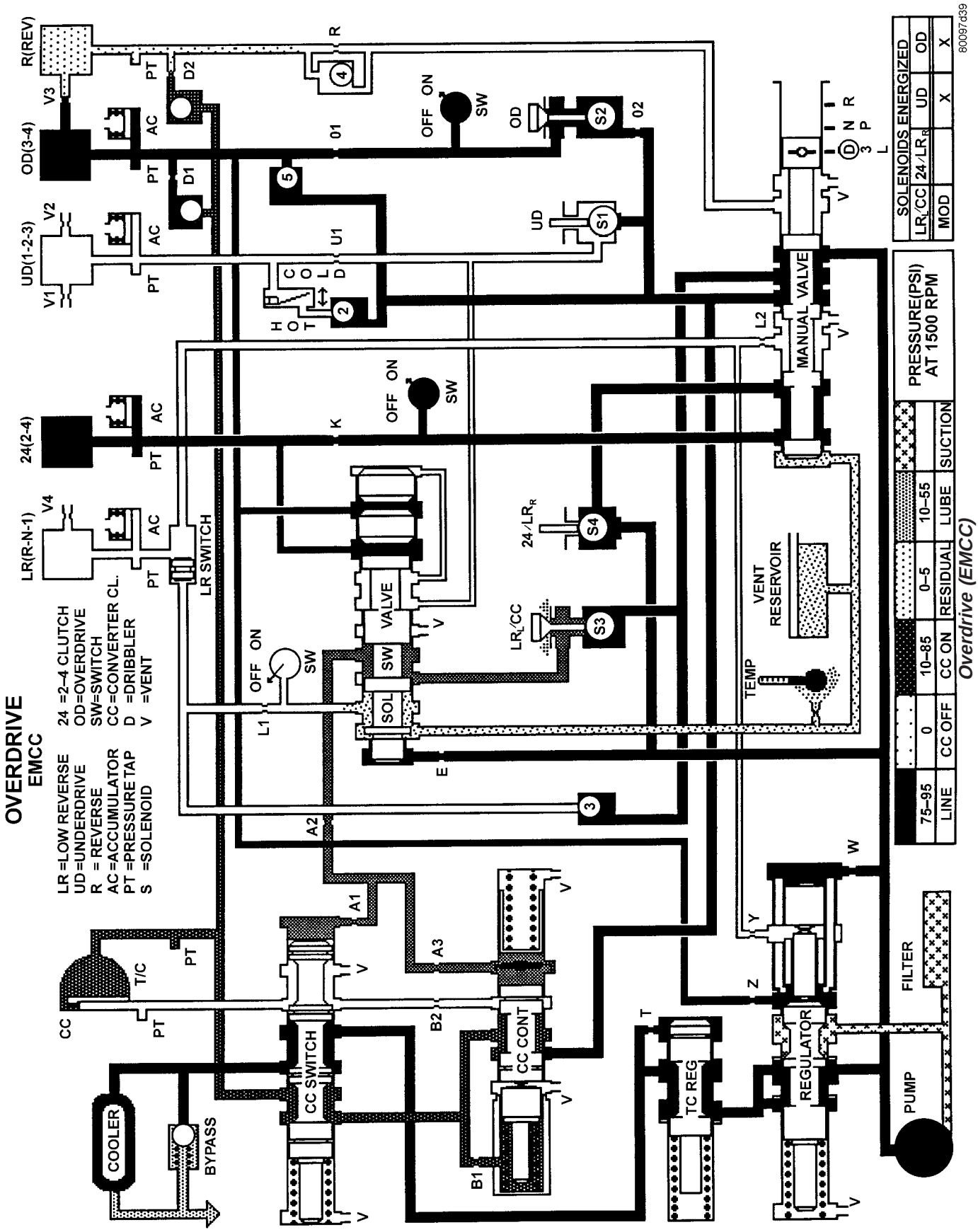

41TE AUTOMATIC TRANSAXLE (Continued)

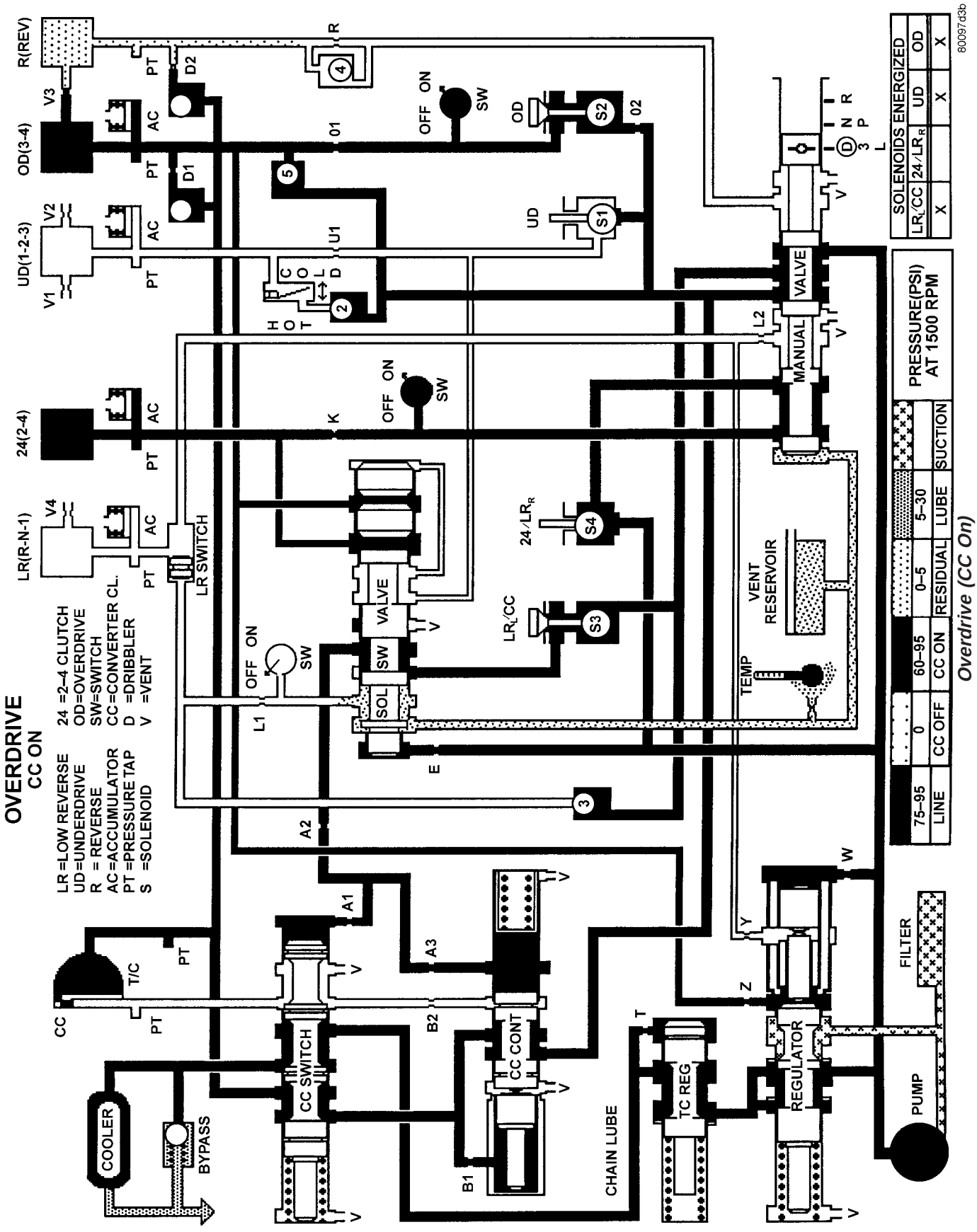

41TE AUTOMATIC TRANSAXLE (Continued)

SPECIFICATIONS - 41TE TRANSAXLE

GENERAL SPECIFICATIONS

DESCRIPTION	SPECIFICATION
Transaxle Type	Fully adaptive, electronically controlled, four speed automatic with torque converter and integral differential
Cooling Method	Air-to-oil heat exchanger
Lubrication	Pump (internal-external gear-type

GEAR RATIOS

DESCRIPTION	SPECIFICATION
First Gear	2.84
Second Gear	1.57
Direct Gear	1.00
Overdrive Gear	0.69
Reverse Gear	2.21

BEARING SETTINGS (END PLAY & TURNING TORQUE)

DESCRIPTION	METRIC	STANDARD
Differential Assembly	0.6-2 N·m	5-18 in. lbs.
Output Hub	0.3-2 N·m	3-8 in. lbs.
Transfer Shaft (End Play)	0.051-0.102 mm	0.002-0.004 in.
Overall Drag At Output Hub	0.3-1.9 N·m	3-16 in. lbs.

CLUTCH CLEARANCES

DESCRIPTION	METRIC	STANDARD
Low/Rev Clutch (Select Reaction Plate)	0.89-1.47 mm	0.035-0.058 in.
Two/Four Clutch (No Selection)	0.76-2.64 mm	0.030-0.104 in.
Reverse Clutch (Select Snap Ring)	0.89-1.37 mm	0.035-0.054 in.
Overdrive Clutch (No Selection)	1.07-3.25 mm	0.042-0.128 in.
Underdrive Clutch (Select Pressure Plate)	0.94-1.50 mm	0.037-0.059 in.

OIL PUMP CLEARANCES

DESCRIPTION	METRIC	STANDARD
Outer Gear-to-Crescent	0.060-0.298 mm	0.0023-0.0117 in.
Inner Gear-to-Crescent	0.093-0.385 mm	0.0036-0.0151 in.
Outer Gear-to-Pocket	0.089-0.202 mm	0.0035-0.0079 in.
Outer Gear Side Clearance	0.020-0.046 mm	0.0008-0.0018 in.
Inner Gear Side Clearance	0.020-0.046 mm	0.0008-0.0018 in.

41TE AUTOMATIC TRANSAXLE (Continued)

INPUT SHAFT

DESCRIPTION	METRIC	SPECIFICATION
End Play	0.127-0.635mm	0.005-0.025 in.

TORQUE SPECIFICATIONS

DESCRIPTION	N·m	Ft. Lbs.	In. Lbs.
Bolt, Differential Cover-to-Case	19	—	165
Bolt, Differential Ring Gear-to-Case	95	70	—
Bolt, Differential Bearing Retainer-to-Case	28	21	—
Bolt, Driveplate-to-Crankshaft	95	70	—
Bolt, Extension Housing/ Plate-to-Case	28	21	—
Bolt, Oil Pan-to-Case	19	—	165
Bolt, Output Gear	271	200	—
Bolt, Output Gear Stirrup/Strap	23	17	—
Bolt, Oil Pump-to-Case	27	20	—
Bolt, Reaction Support-to-Case	27	20	—
Bolt, Solenoid/Pressure Switch Assy.-to-Case	12	—	110
Bolt, Torque Converter-to-Driveplate	75	55	—
Bolt, Transfer Gear Cover	20	—	175
Bolt, Valve Body-to-Case	12	—	105
Fitting, Oil Cooler Line	12	—	105
Nut, Tranfer Gear	271	200	—
Tap, Transaxle Pressure	5	—	45
Screw, L/R Clutch Retainer	5	—	45
Screw, Solenoid/Pressure Switch Assy. Connector	4	—	35
Screw, Valve Body-to-Transfer Plate	5	—	45
Sensor, Input Speed	27	20	—
Sensor, Output Speed	27	20	—
Sensor, Transmission Range Sensor	5	—	45

41TE AUTOMATIC TRANSAXLE (Continued)

SPECIAL TOOLS

41TE AUTOMATIC TRANSAXLE

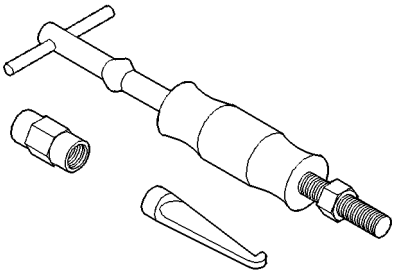

Puller C-637

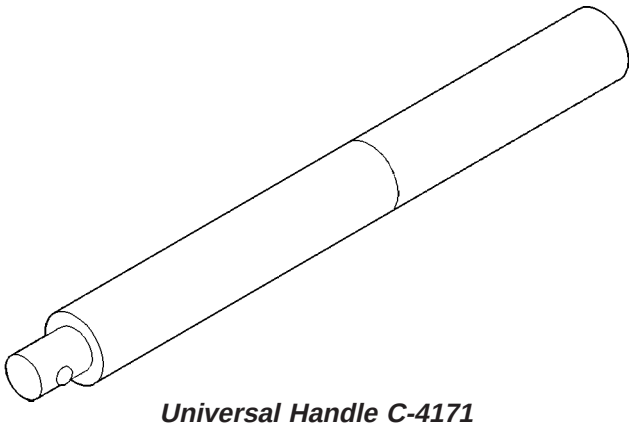

Universal Handle C-4171

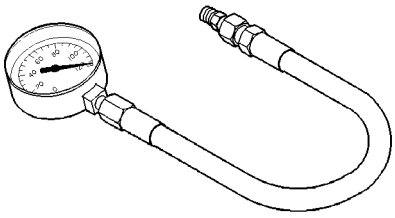

Pressure Gauge (High) C-3293SP

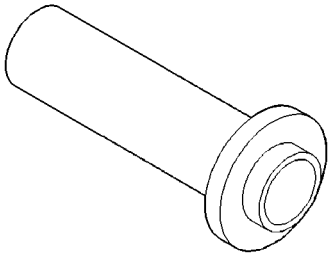

Seal Installer C-4193A

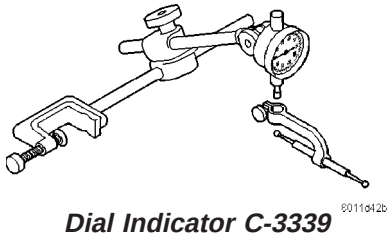

Dial Indicator C-3339

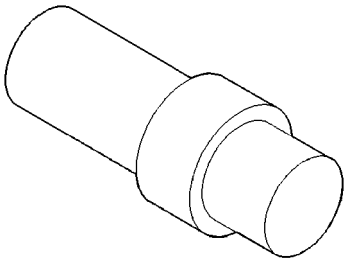

Adapter C-4996

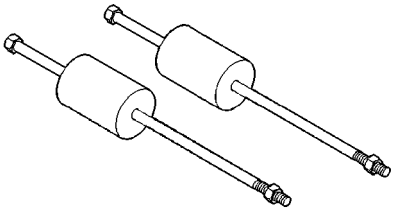

Oil Pump Puller C-3752

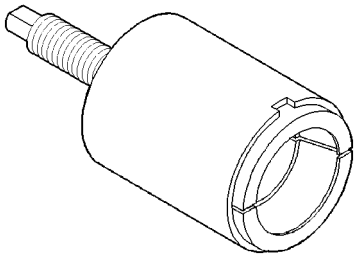

Remover Kit L-4406

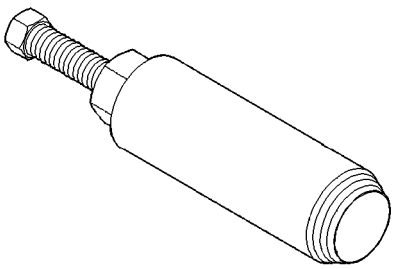

Seal Puller C-3981B

41TE AUTOMATIC TRANSAXLE (Continued)

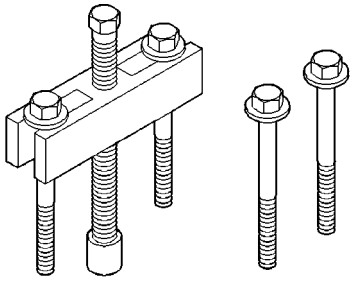

Gear Puller L-4407A

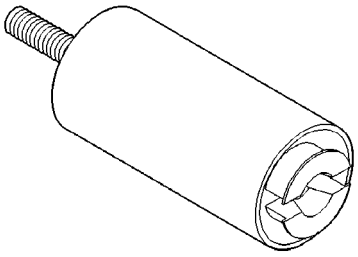

Special Jaw Set L-4518

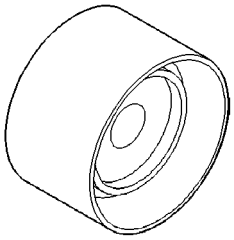

Bearing Installer L-4410

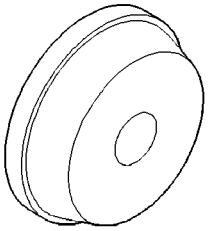

Installer L-4520

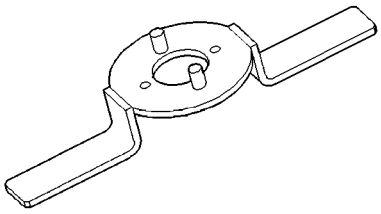

Gear Checking Plate L-4432

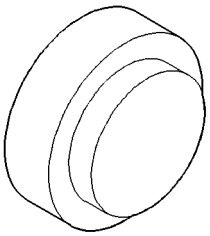

Thrust Button L-4539-2

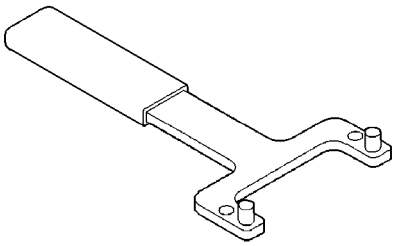

Bearing Puller L-4435

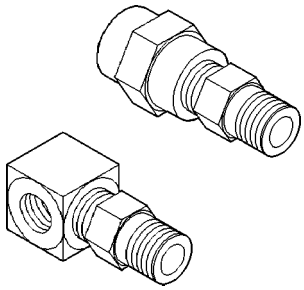

Adapter L-4559

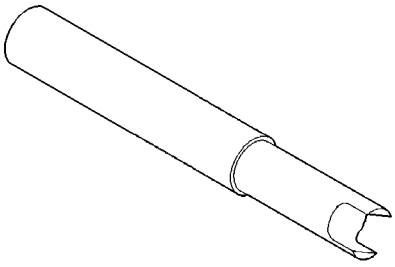

Differential Tool L-4436A

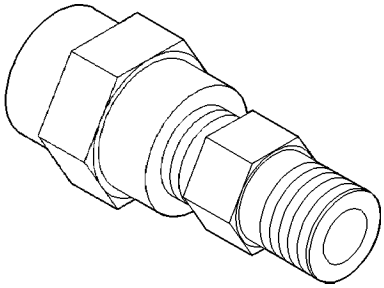

Adapter L-4559-2

41TE AUTOMATIC TRANSAXLE (Continued)

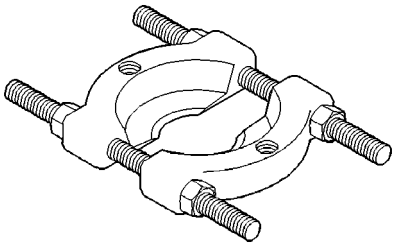

Bearing Splitter P-334

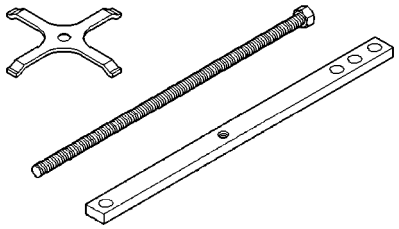

Compressor 5058A

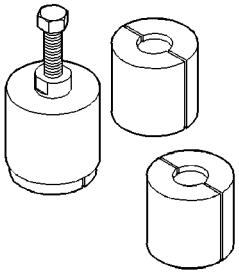

Puller Set 5048

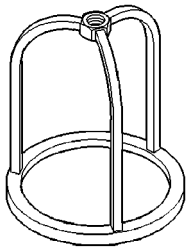

Compressor 5059-A

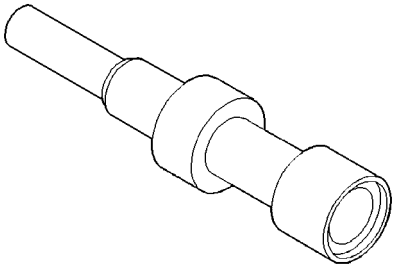

Remover/Installer 5049-A

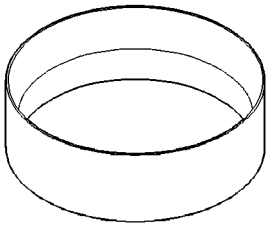

Installer 5067

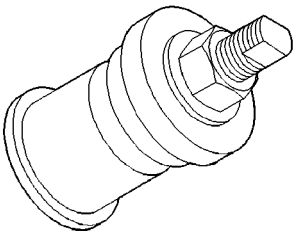

Installer 5050A

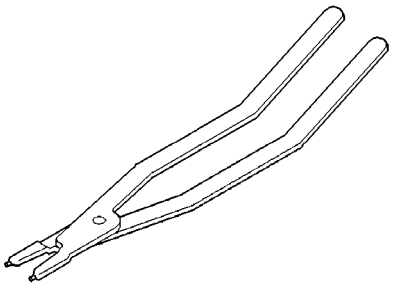

Pliers 6051

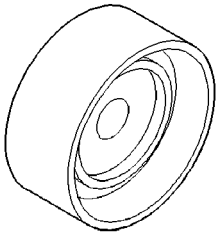

Installer 5052

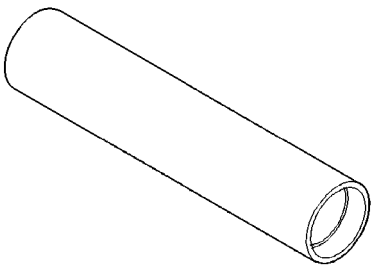

Installer 6052

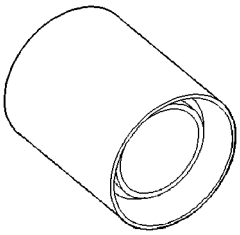

Installer 6053

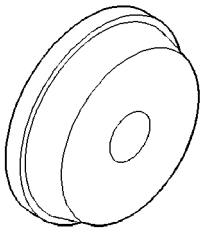

Installer 6061

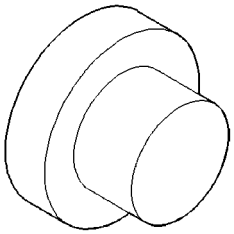

Button 6055

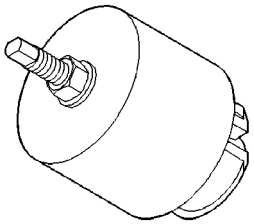

Remover 6062-A

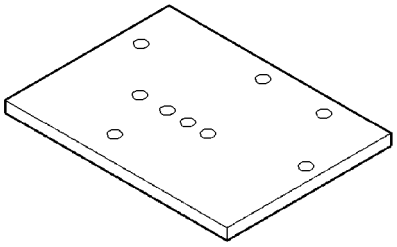

Plate 6056

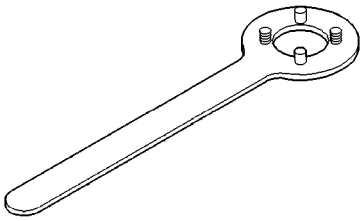

Holder 6259

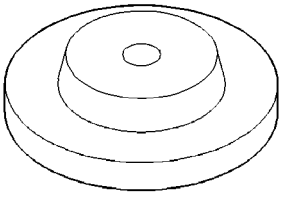

Disk 6057

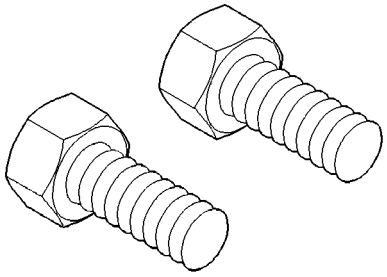

Bolt 6260

41TE AUTOMATIC TRANSAXLE (Continued)

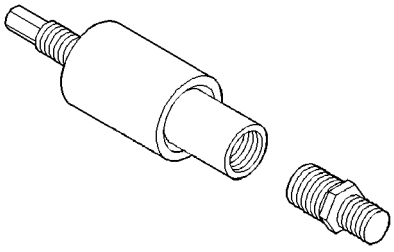

Installer 6261

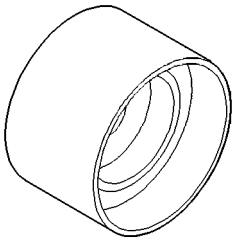

Installer 6536-A

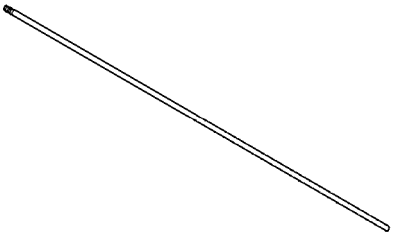

Tip 6268

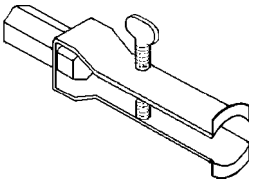

Puller 7794-A

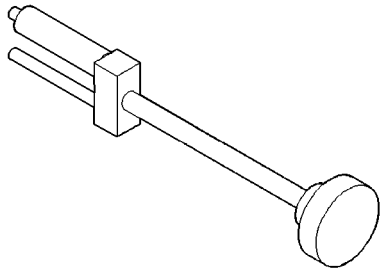

Remover/Installer 6301

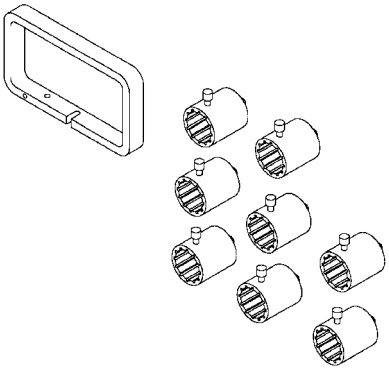

End Play Socket Set 8266

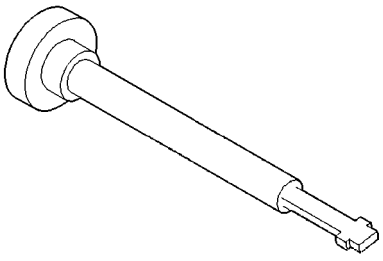

Remover/Installer 6302

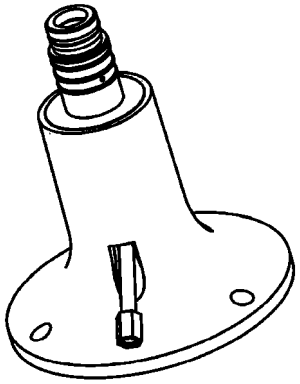

Input Clutch Pressure Fixture 8391

ACCUMULATOR

DESCRIPTION

The 4XTE underdrive, overdrive, low/reverse, and 2/4 clutch hydraulic circuits each contain an accumulator. An accumulator typically consists of a piston, seals, return spring(s), and a cover or plug. The overdrive and underdrive accumulators are located within the transaxle case, and are retained by the valve body (Fig. 164).

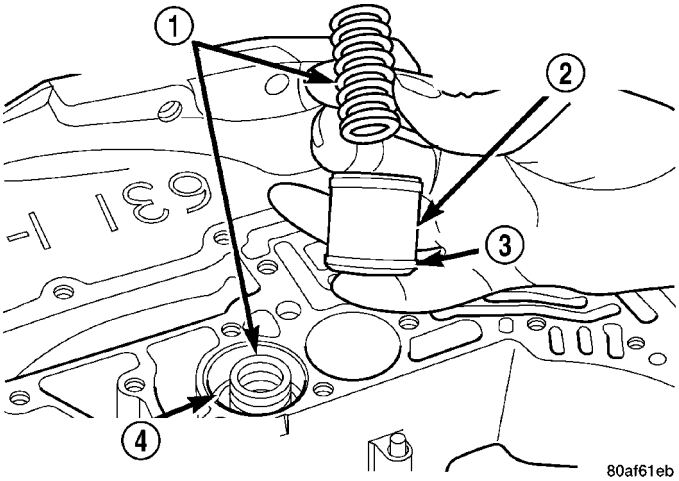

Fig. 164 Underdrive and Overdrive Accumulators

1 - RETURN SPRING
2 - UNDERDRIVE CLUTCH ACCUMULATOR
3 - SEAL RING (2)
4 - OVERDRIVE CLUTCH ACCUMULATOR

The low reverse accumulator (Fig. 165) is also located within the transaxle case, but the assembly is retained by a cover and a snap-ring.

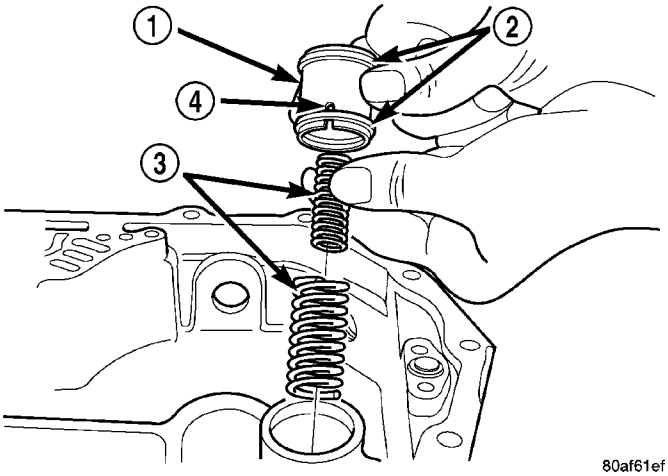

Fig. 165 Low/Reverse Accumulator Assembly

1 - ACCUMULATOR PISTON
2 - SEAL RINGS
3 - RETURN SPRINGS
4 - (NOTE NOTCH)

The 2/4 accumulator is located in the valve body. It is retained by a cover and retaining screws (Fig. 166).

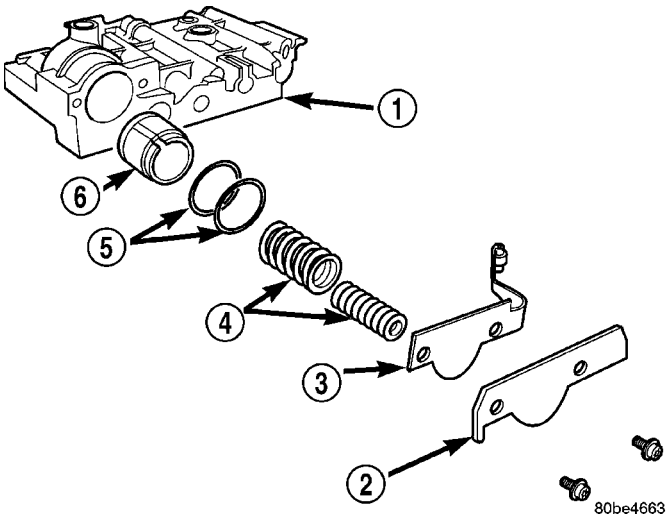

Fig. 166 2/4 Accumulator Assembly

1 - VALVE BODY
2 - RETAINER PLATE
3 - DETENT SPRING
4 - SPRINGS
5 - SEALS
6 - PISTON

OPERATION

The function of an accumulator is to cushion the application of a frictional clutch element. When pressurized fluid is applied to a clutch circuit, the application force is dampened by fluid collecting in the respective accumulator chamber against the piston and spring(s). The intended result is a smooth, firm clutch application.

DRIVING CLUTCHES

DESCRIPTION

Three hydraulically applied input clutches are used to drive planetary components. The underdrive, overdrive, and reverse clutches are considered input clutches and are contained within the input clutch assembly (Fig. 167). The input clutch assembly also contains:

- Input shaft
- Input hub
- Clutch retainer
- Underdrive piston
- Overdrive/reverse piston
- Overdrive hub
- Underdrive hub

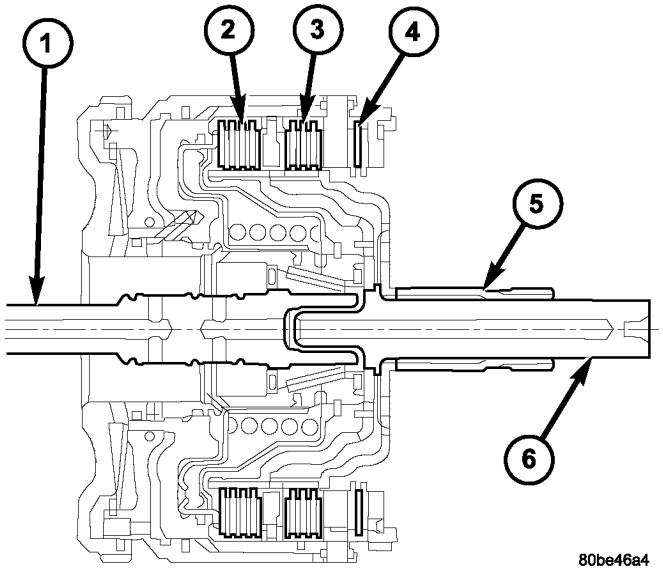

Fig. 167 Input Clutch Assembly

1 - INPUT SHAFT
2 - UNDERDRIVE CLUTCH
3 - OVERDRIVE CLUTCH
4 - REVERSE CLUTCH
5 - OVERDRIVE SHAFT
6 - UNDERDRIVE SHAFT

OPERATION

The three input clutches are responsible for driving different components of the planetary geartrain.

NOTE: Refer to the "Elements In Use" chart in Diagnosis and Testing for a collective view of which clutch elements are applied at each position of the selector lever.

UNDERDRIVE CLUTCH

The underdrive clutch is hydraulically applied in first, second, and third (direct) gears by pressurized fluid against the underdrive piston. When the underdrive clutch is applied, the underdrive hub drives the rear sun gear.

OVERDRIVE CLUTCH

The overdrive clutch is hydraulically applied in third (direct) and overdrive gears by pressurized fluid against the overdrive/reverse piston. When the overdrive clutch is applied, the overdrive hub drives the front planet carrier.

REVERSE CLUTCH

The reverse clutch is hydraulically applied in reverse gear only by pressurized fluid against the overdrive/reverse piston. When the reverse clutch is applied, the front sun gear assembly is driven.

FINAL DRIVE

DESCRIPTION

The 41TE differential is a conventional open design. It consists of a ring gear and a differential case. The differential case consists of pinion and side gears, and a pinion shaft. The differential case is supported in the transaxle by tapered roller bearings (Fig. 168).

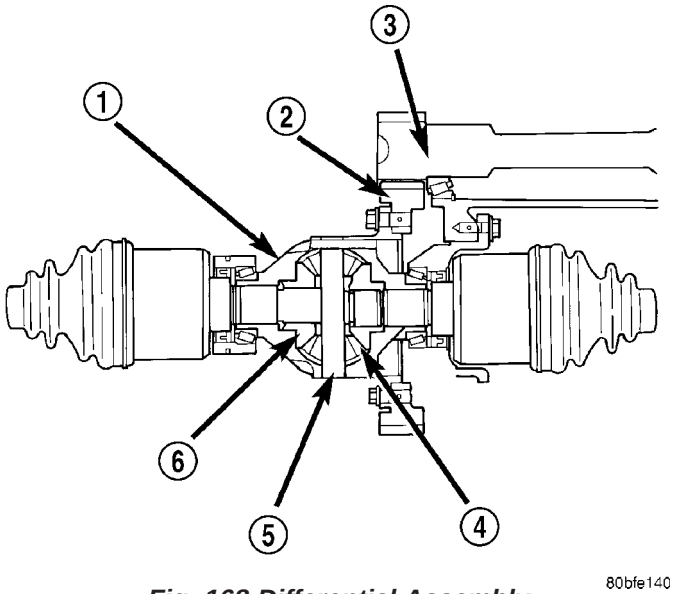

Fig. 168 Differential Assembly

1 - DIFFERENTIAL CASE
2 - RING GEAR
3 - TRANSFER SHAFT
4 - PINION GEAR
5 - PINION SHAFT
6 - SIDE GEAR

FINAL DRIVE (Continued)

OPERATION

The differential assembly is driven by the transfer shaft by way of the differential ring gear. The ring gear drives the differential case, and the case drives the driveshafts through the differential gears. The differential pinion and side gears are supported in the case by thrust washers and a pinion shaft. Differential pinion and side gears make it possible for front tires to rotate at different speeds while cornering.

DISASSEMBLY

NOTE: The differential is serviced as an assembly. Differential service is limited to bearing cups and cones. Any other differential component failure must be remedied by differential assembly and transfer shaft replacement.

The transfer shaft should be removed for differential repair and bearing turning torque checking.

(1) Remove the differential cover and bolts (Fig. 169) (Fig. 170).

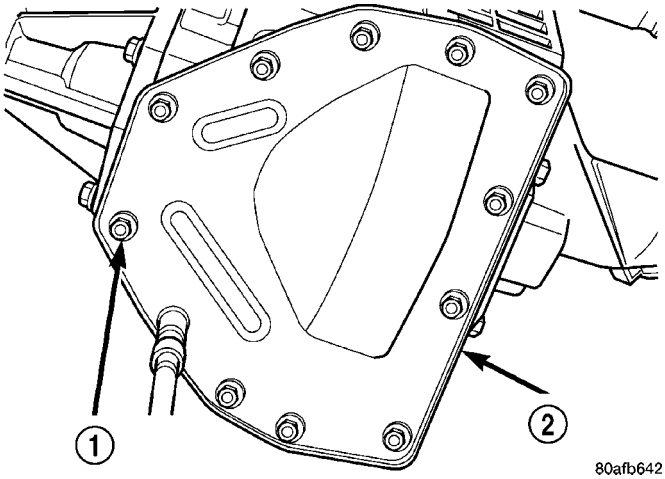

Fig. 169 Differential Cover Bolts

1 - DIFFERENTIAL COVER BOLTS
2 - DIFFERENTIAL COVER

(2) Remove the differential bearing retainer and bolts (Fig. 171) (Fig. 172).

(3) Using a plastic hammer, remove extension housing/adapter plate on the right side of the transaxle.

WARNING: HOLD ONTO DIFFERENTIAL ASSEMBLY TO PREVENT IT FROM ROLLING OUT OF HOUSING.

(4) Use Miller Special Tool 5048, 5048-3 Collets, and L-4539-2 Button to remove the differential bearing cone on the extension housing side.

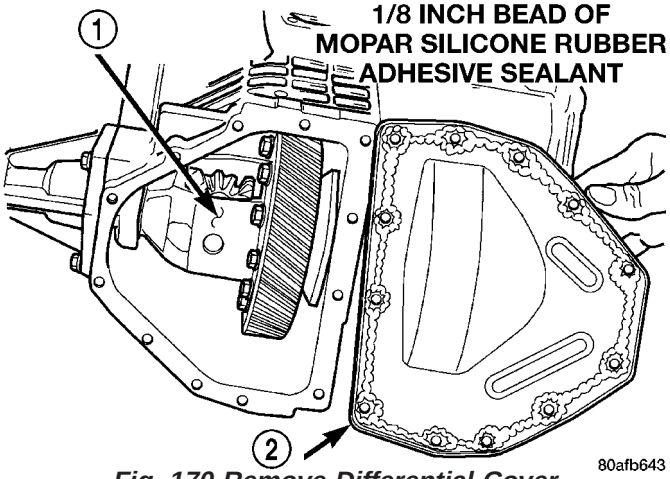

Fig. 170 Remove Differential Cover

1 - DIFFERENTIAL ASSEMBLY
2 - DIFFERENTIAL COVER

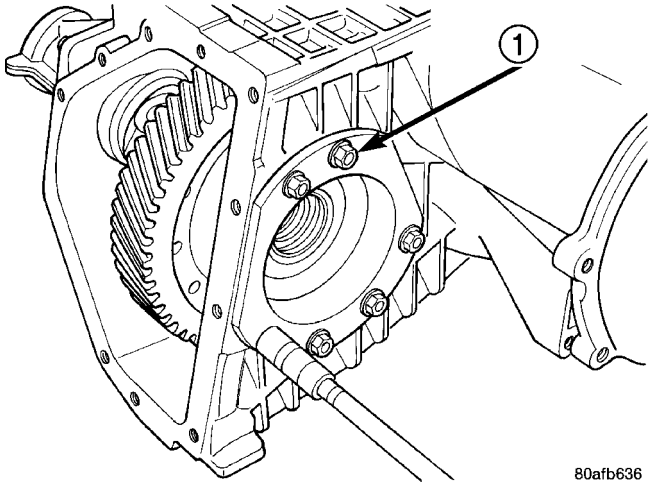

Fig. 171 Differential Retainer Bolts

1 - DIFFERENTIAL RETAINER BOLTS

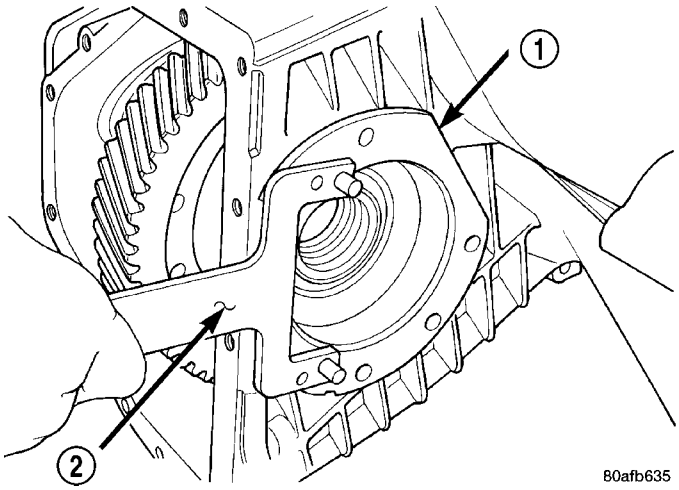

Fig. 172 Remove Bearing Retainer

1 - DIFFERENTIAL BEARING RETAINER
2 - TOOL L-4435

FINAL DRIVE (Continued)

(5) Use Miller Special Tool 5048, 5048-4 Collets, and L-4539-2 Button to remove the differential bearing cone on the bearing retainer side (Fig. 173) (Fig. 174) (Fig. 175).

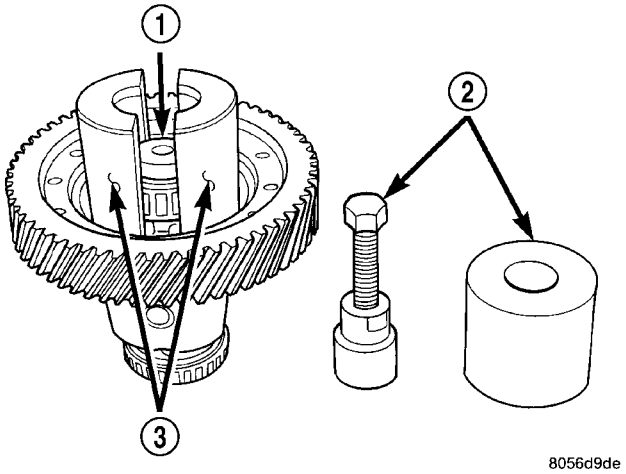

Fig. 173 Position Button and Collets Onto Differential and Bearing (Ring Gear Side)

1 - SPECIAL TOOL L-4539-2
2 - SPECIAL TOOL 5048
3 - SPECIAL TOOL 5048-4

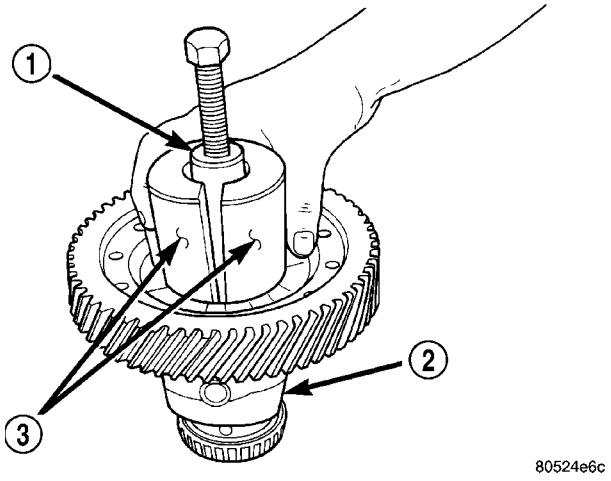

Fig. 174 Position Tool 5048 Over Button and Collets at Differential Bearing (Ring Gear Side)

1 - SPECIAL TO0L 5048
2 - DIFFERENTIAL
3 - SPECIAL TOOL 5048-4

(6) Using Miller Special Tool L-4518, remove the differential bearing race from the extension housing.

(7) Using Miller Special Tool 6062A, remove the differential bearing race from the bearing retainer (Fig. 176) (Fig. 177).

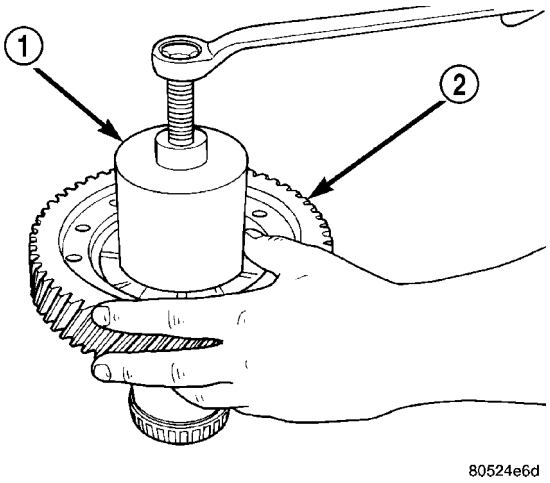

Fig. 175 Remove Differential Bearing Cone (Ring Gear Side)

1 - SPECIAL TOOL 5048
2 - RING GEAR

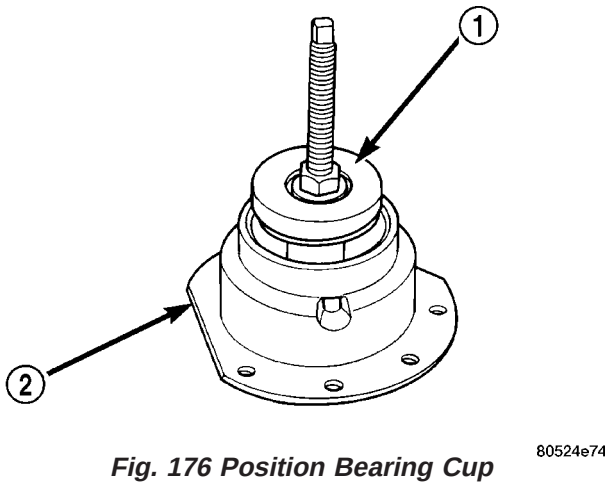

Fig. 176 Position Bearing Cup Remover Tool in Retainer

1 - SPECIAL TOOL 6062A
2 - DIFFERENTIAL BEARING RETAINER

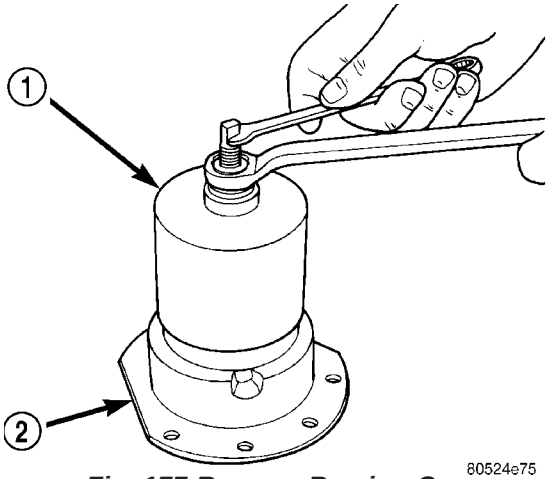

Fig. 177 Remove Bearing Cup

1 - SPECIAL TOOL 6062A
2 - DIFFERENTIAL BEARING RETAINER

FINAL DRIVE (Continued)

(8) Remove ring gear-to-differential case bolts and floating pinion shaft retainers (Fig. 178).

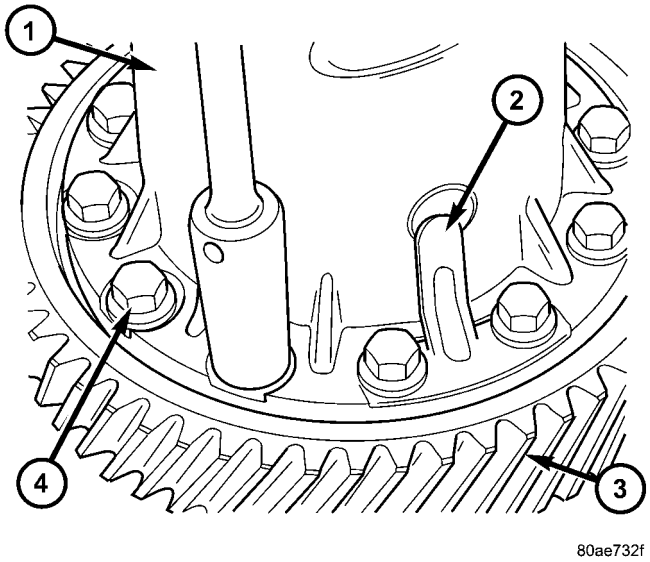

Fig. 178 Ring Gear-to-Case Bolts

1 - DIFFERENTIAL CASE
2 - PINION SHAFT RETAINER
3 - RING GEAR
4 - RING GEAR-TO-CASE BOLT

(9) Separate ring gear from differential case (Fig. 179).

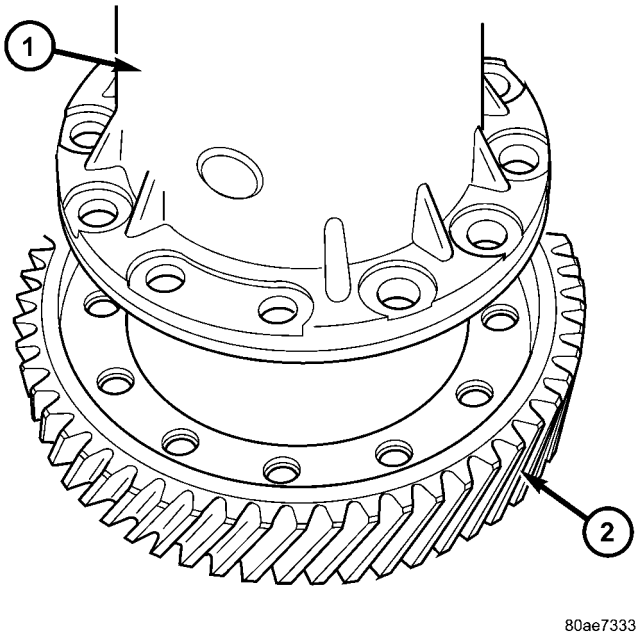

Fig. 179 Ring Gear Removal

1 - DIFFERENTIAL CASE
2 - RING GEAR

(10) Separate differential cover from case using suitable screwdrivers at position shown in (Fig. 180)

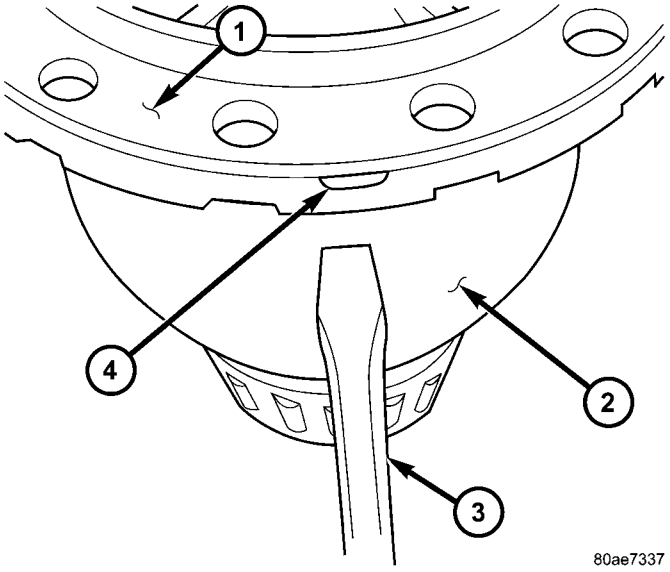

Fig. 180 Separating Differential Support with Screwdrivers

1 - DIFFERENTIAL SUPPORT
2 - DIFFERENTIAL CASE
3 - SCREWDRIVER
4 - RELIEF (2 @ 180° APART)

(11) Lift support from case (Fig. 181).

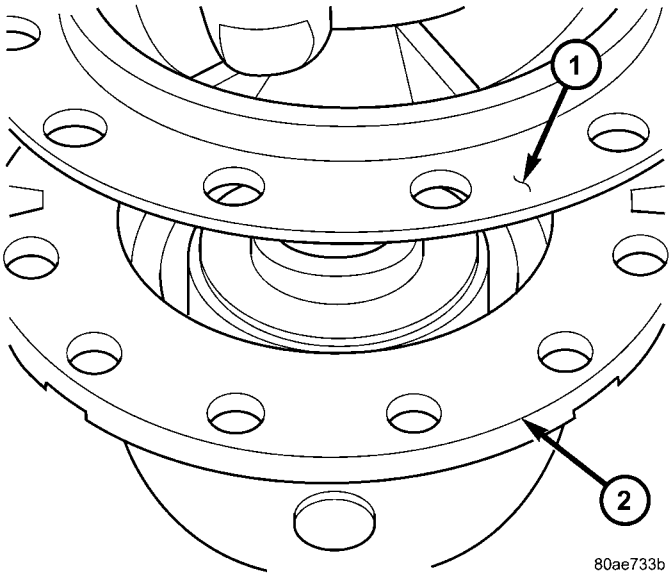

Fig. 181 Differential Support Removal

1 - DIFFERENTIAL SUPPORT
2 - DIFFERENTIAL CASE

FINAL DRIVE (Continued)

(12) Remove side gear thrust washer (Fig. 182).

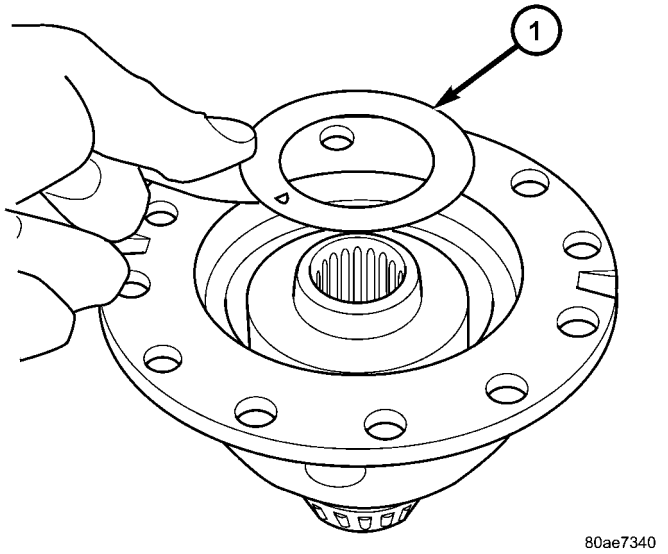

Fig. 182 Side Gear Thrust Washer Removal

1 - SIDE GEAR THRUST WASHER

(13) Remove side gear (Fig. 183).

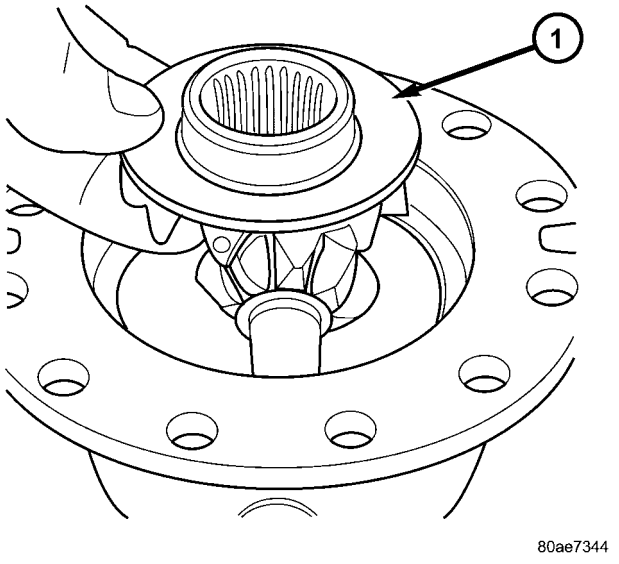

Fig. 183 Side Gear Removal

1 - DIFFERENTIAL SIDE GEAR

(14) Remove pinion shaft (Fig. 184).

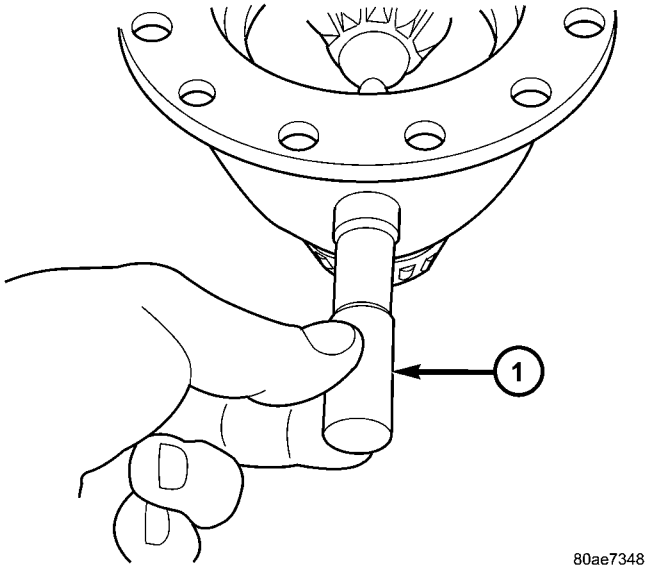

Fig. 184 Pinion Shaft Removal

1 - PINION SHAFT

(15) Remove pinion gears and tabbed washers (Fig. 185).

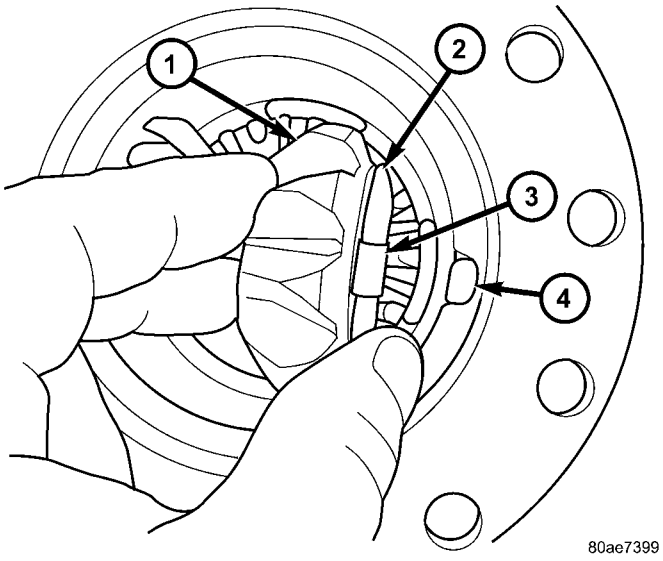

Fig. 185 Pinion Gear and Washer Removal

1 - PINION GEAR
2 - TABBED WASHER
3 - LOCATING TAB
4 - NOTCH

FINAL DRIVE (Continued)

(16) Remove differential side gear (Fig. 186).

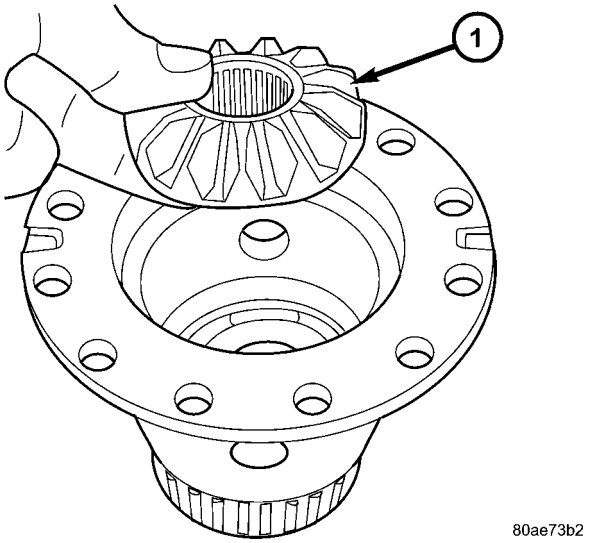

Fig. 186 Side Gear Removal

1 - DIFFERENTIAL SIDE GEAR

(17) Remove side gear thrust washer (Fig. 187).

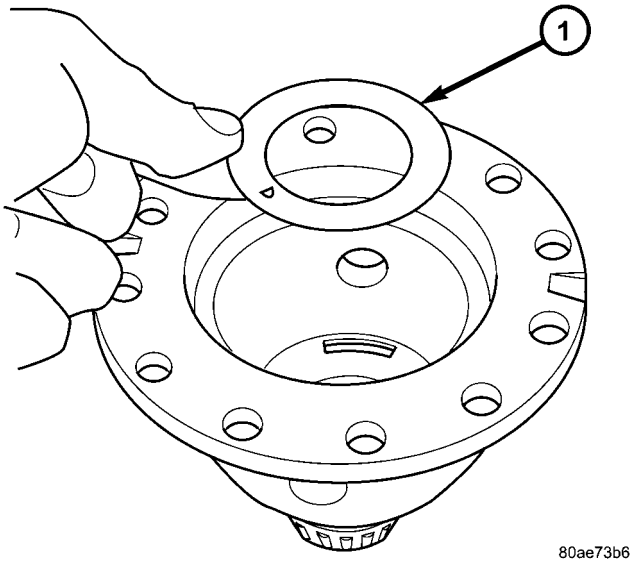

Fig. 187 Side Gear Thrust Washer Removal

1 - THRUST WASHER

(18) Inspect all components for excessive wear.

ASSEMBLY

NOTE: The differential is serviced as an assembly. Differential service is limited to bearing cups and cones. Any other differential component failure must be remedied by differential assembly and transfer shaft replacement.

(1) Install side gear thrust washer to differential case (Fig. 188).

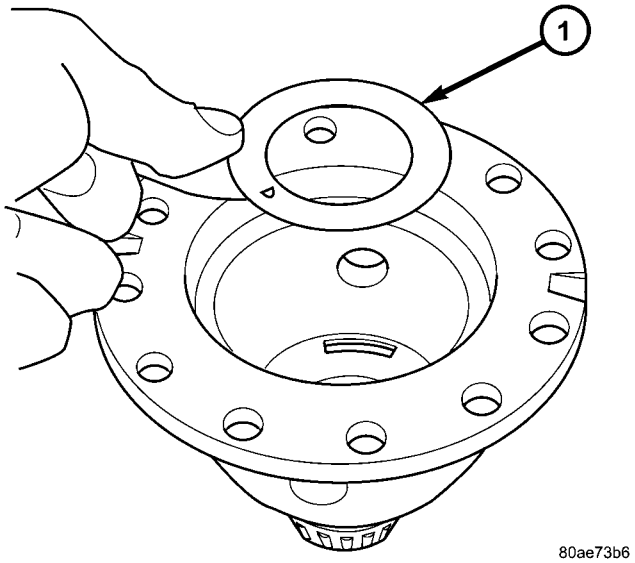

Fig. 188 Thrust Washer Installation

1 - THRUST WASHER

(2) Install side gear to differential case (Fig. 189).

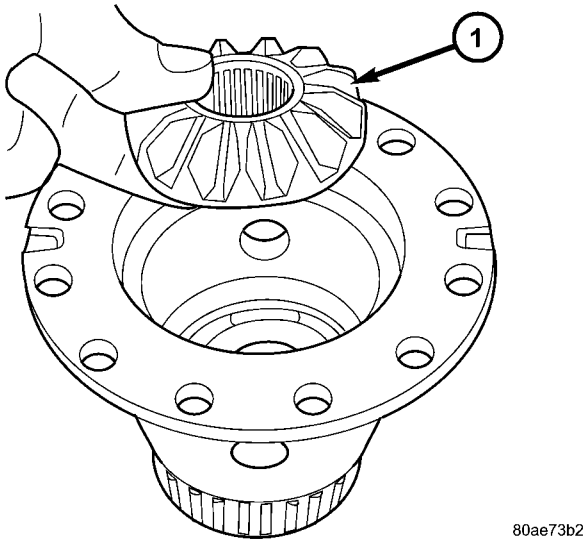

Fig. 189 Side Gear Installation

1 - DIFFERENTIAL SIDE GEAR

FINAL DRIVE (Continued)

(3) Install both pinion gears and washers to case, while orientating washer tabs to notch in case (Fig. 190).

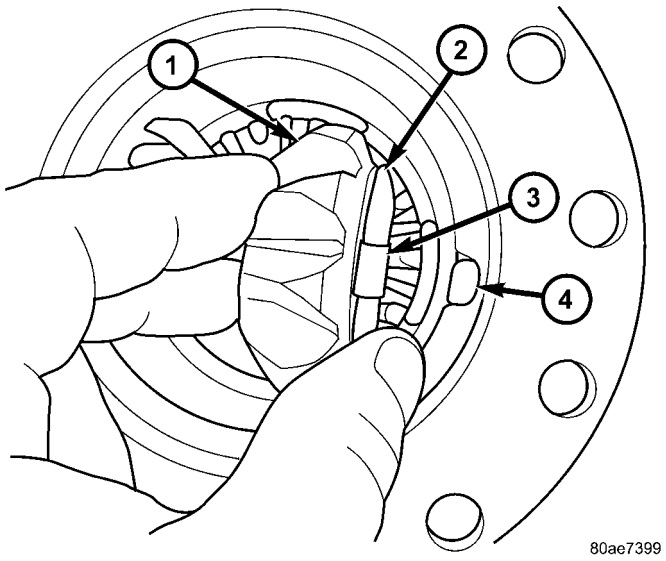

Fig. 190 Pinion Gear and Washer Installation

1 - PINION GEAR
2 - TABBED WASHER
3 - LOCATING TAB
4 - NOTCH

(4) Install pinion shaft (Fig. 191).

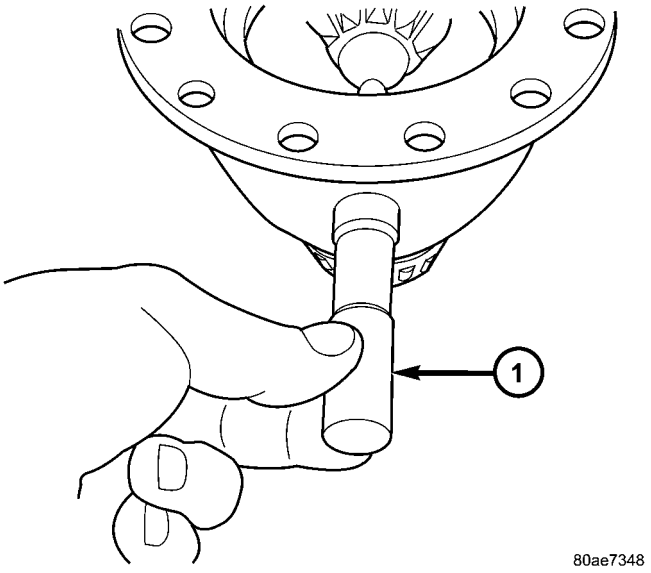

Fig. 191 Pinion Shaft Installation

1 - PINION SHAFT

(5) Install side gear to case (Fig. 192).

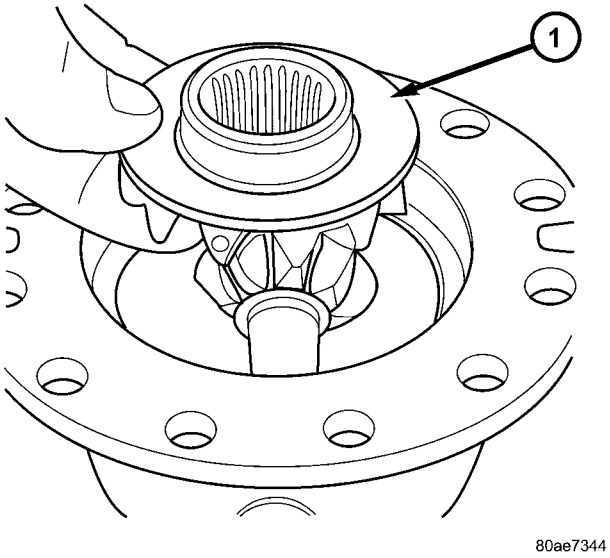

Fig. 192 Side Gear Installation

1 - DIFFERENTIAL SIDE GEAR

(6) Install side gear thrust washer to case (Fig. 193).

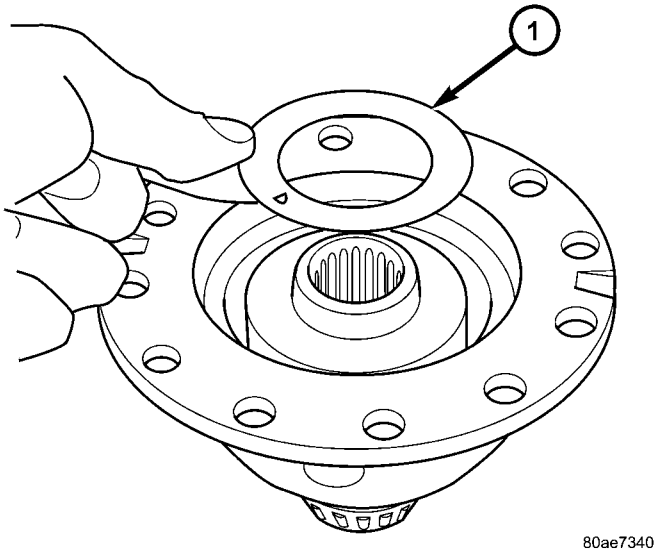

Fig. 193 Side Gear Thrust Washer

1 - SIDE GEAR THRUST WASHER

FINAL DRIVE (Continued)

(7) Install differential support into position, while aligning through-holes (Fig. 194).

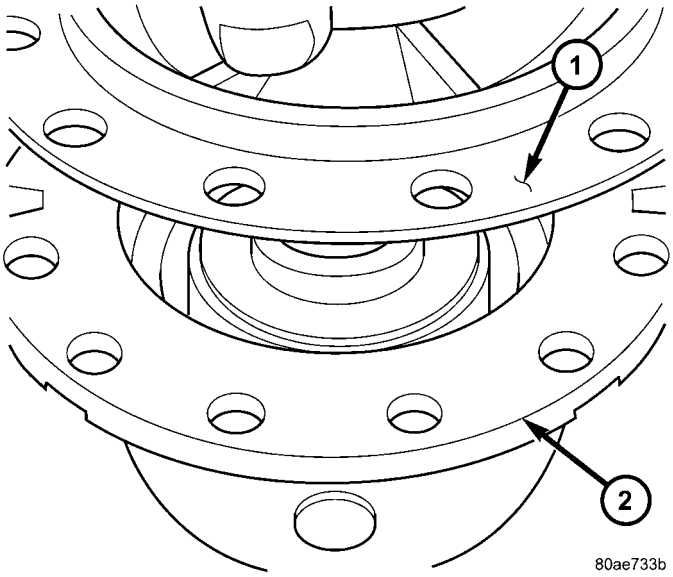

Fig. 194 Diff Support Installation

1 - DIFFERENTIAL SUPPORT
2 - DIFFERENTIAL CASE

(8) Install differential ring gear to case (Fig. 195).

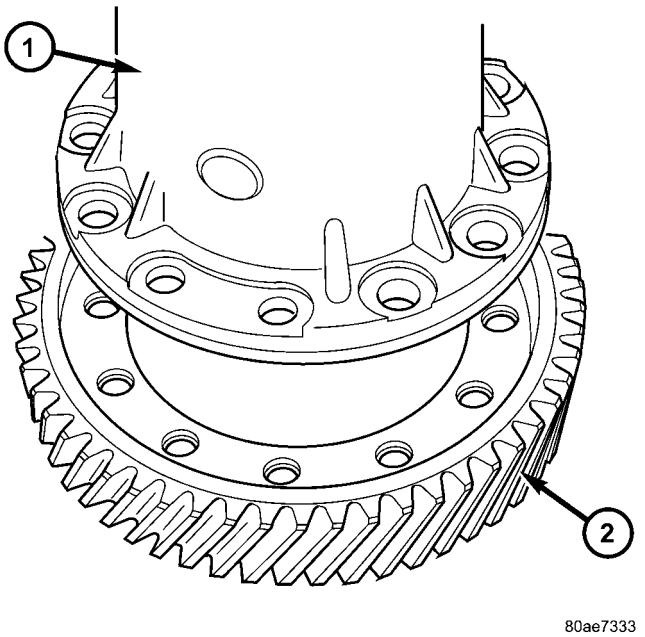

Fig. 195 Ring Gear Installation

1 - DIFFERENTIAL CASE
2 - RING GEAR

(9) Install ring gear-to-case bolts, with pinion shaft retainers (Fig. 196), and torque bolts to 95 N·m (70 ft. lbs.).

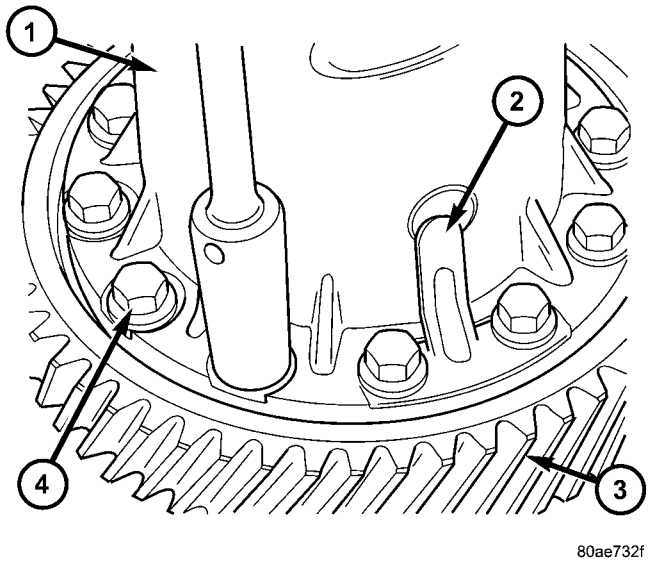

Fig. 196 Ring Gear-to-Case Bolts

1 - DIFFERENTIAL CASE
2 - PINION SHAFT RETAINER
3 - RING GEAR
4 - RING GEAR-TO-CASE BOLT

(10) Using Miller Special Tool L-4410, and C-4171, install differential bearing to differential (extension housing side) (Fig. 197).

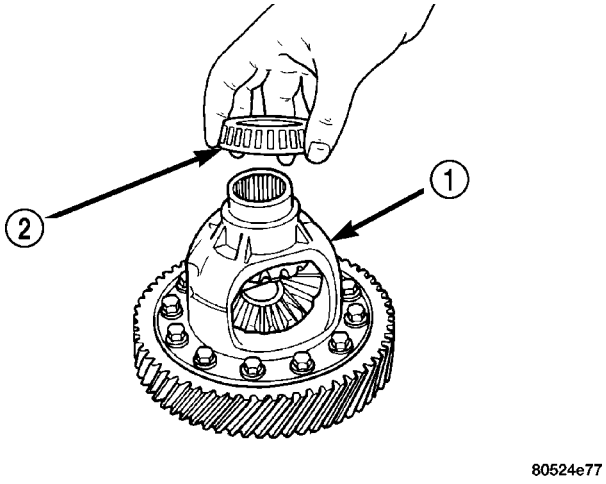

Fig. 197 Position Bearing Cone Onto Differential—Typical

1 - DIFFERENTIAL ASSEMBLY
2 - DIFFERENTIAL BEARING

FINAL DRIVE (Continued)

(11) Using Miller Special Tool 5052 and C-4171, install differential bearing to differential (bearing retainer side).

(12) Using Miller Special Tool 6061 and C-4171, install differential bearing race to bearing retainer (Fig. 198).

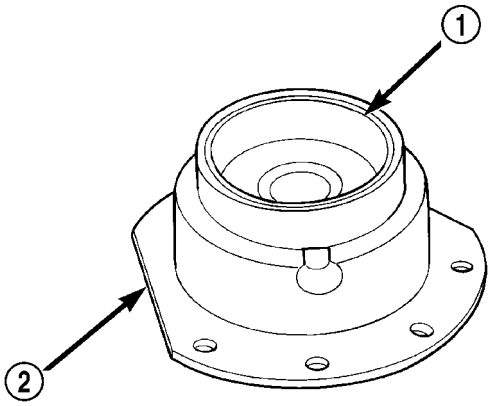

Fig. 198 Differential Bearing Retainer

1 - DIFFERENTIAL BEARING CUP
2 - DIFFERENTIAL BEARING RETAINER

(13) Using Miller Special Tool L–4520 and C-4171, install differential bearing to extension housing.

NOTE: Use Mopar® Silicone Rubber Adhesive Sealant, or equivalent, on retainer and extension housing/adapter plate to seal to case.

(14) Install differential assembly into transaxle case. Install differential bearing retainer (Fig. 199)and torque retainer-to-case bolts (Fig. 200)to 28 N·m (21 ft. lbs.).

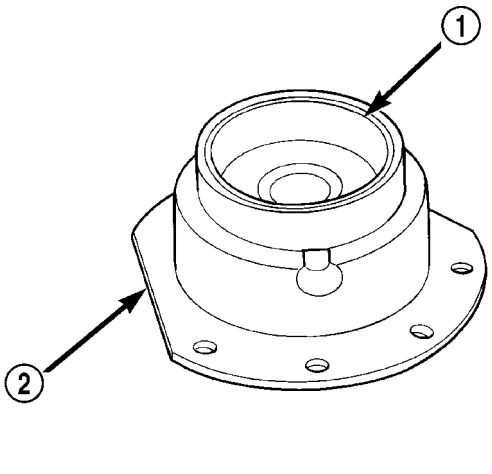

Fig. 199 Differential Bearing Retainer

1 - DIFFERENTIAL BEARING CUP
2 - DIFFERENTIAL BEARING RETAINER

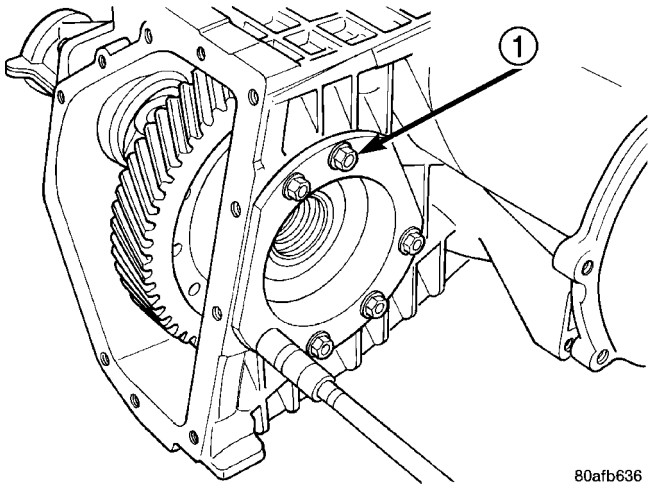

Fig. 200 Differential Retainer Bolts

1 - DIFFERENTIAL RETAINER BOLTS

(15) Apply a bead of Mopar® Silicone Rubber Adhesive Sealant to extension housing/adapter plate and install into position. Install and torque bolts to 28 N·m (21 ft. lbs.).

(16) Measure and adjust differential bearing preload. (Refer to 21 - TRANSMISSION/TRANSAXLE/ AUTOMATIC - 41TE/FINAL DRIVE - ADJUSTMENTS)

(17) Apply a bead of Mopar® Silicone Rubber Adhesive Sealant to differential cover and install to case (Fig. 201).

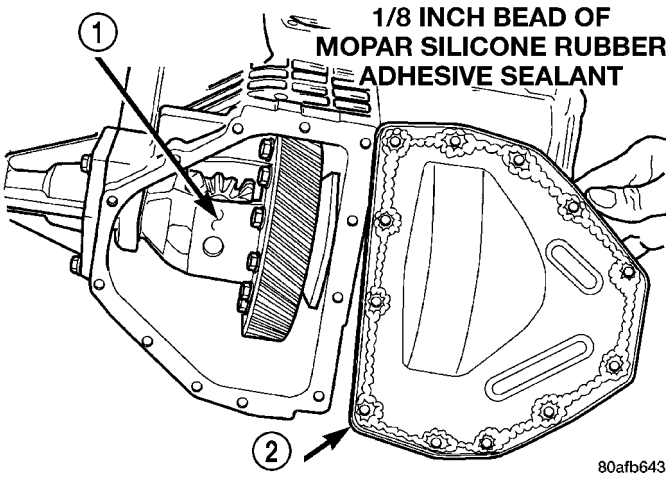

Fig. 201 Install Differential Cover

1 - DIFFERENTIAL ASSEMBLY
2 - DIFFERENTIAL COVER

FINAL DRIVE (Continued)

(18) Install and torque cover-to-case bolts to 19 N·m (165 in. lbs.) (Fig. 202).

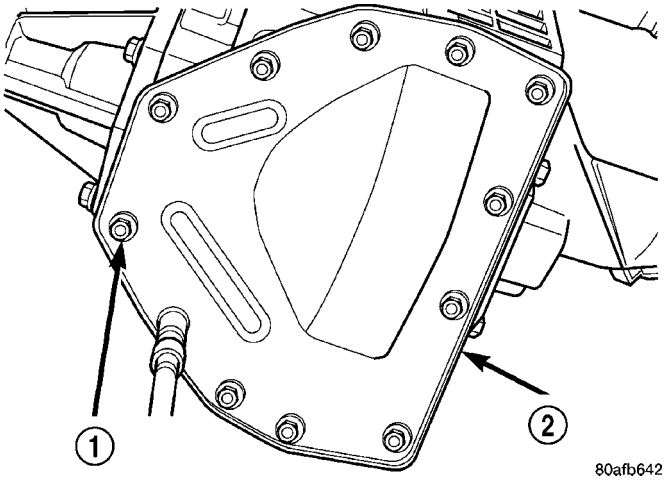

Fig. 202 Differential Cover Bolts

1 - DIFFERENTIAL COVER BOLTS
2 - DIFFERENTIAL COVER

ADJUSTMENTS

ADJUSTMENT - DIFFERENTIAL BEARING PRELOAD

NOTE: Perform all differential bearing preload measurements with the transfer shaft and gear removed.

DIFFERENTIAL BEARING PRELOAD ADJUSTMENT USING EXISTING SHIM

(1) Position the transaxle assembly vertically on the support stand, differential bearing retainer side up.

(2) Install Tool L-4436A into the differential and onto the pinion mate shaft (Fig. 203).

(3) Rotate the differential at least one full revolution to ensure the tapered roller bearings are fully seated.

(4) Using Tool L-4436A and an inch-pound torque wrench, check the turning torque of the differential (Fig. 204). **The turning torque should be between 5 and 18 inch-pounds.**

(5) If the turning torque is within specifications, remove tools. Setup is complete.

(6) If turning torque is not within specifications proceed with the following steps.

(a) Remove differential bearing retainer from the transaxle case.

(b) Remove the bearing cup from the differential bearing retainer using Tool 6062A.

(c) Remove the existing shim from under the cup.

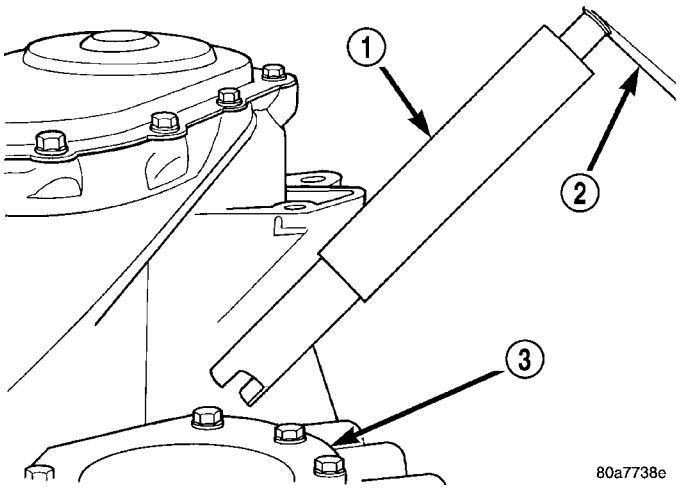

Fig. 203 Tool L-4436 and Torque Wrench

1 - SPECIAL TOOL L-4436–A
2 - TORQUE WRENCH
3 - DIFFERENTIAL BEARING RETAINER

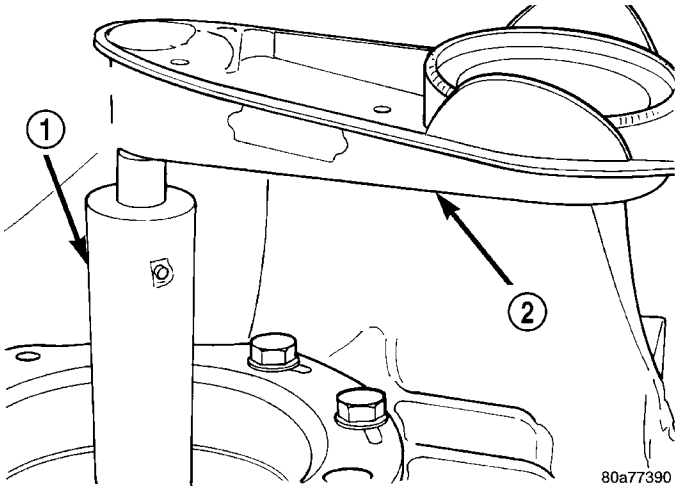

Fig. 204 Checking Differential Bearings Turning Torque

1 - SPECIAL TOOL L-4436–A
2 - TORQUE WRENCH

(d) Measure the existing shim.

(e) If the turning torque was too high when measured, install a 0.05 mm (0.002 inch) thinner shim. If the turning torque is was too low, install a 0.05 mm (0.002 inch) thicker shim. Repeat until 5-18 inch-pounds turning torque is obtained. Oil Baffle is not required to be installed when making shim selection.

(f) Install the proper shim under the bearing cup. Make sure the oil baffle is installed properly in the bearing retainer, below the bearing shim and cup.

(g) Install the differential bearing retainer using Tool 5052 and C-4171. Seal the retainer to the

FINAL DRIVE (Continued)

housing with MOPAR® Silicone Rubber Adhesive Sealant and torque bolts to 28 N·m (250 in. lbs.).

(7) Using Tool L-4436A and an inch-pound torque wrench, recheck the turning torque of the differential (Fig. 204). **The turning torque should be within 5-18 inch-pounds.**

Shim thickness need be determined only if any of the following parts are replaced:

- Transaxle case
- Differential carrier
- Differential bearing retainer
- Extension housing
- Differential bearing cups and cones

DIFFERENTIAL BEARING SHIM CHART

PART NUMBER	SHIM THICKNESS	
	MM	INCH
4659257	.980	0.0386
4659258	1.02	0.0402
4659259	1.06	0.0418
4659260	1.10	0.0434
4659261	1.14	0.0449
4659262	1.18	0.0465
4659263	1.22	0.0481
4659264	1.26	0.0497
4659265	1.30	0.0512
4659266	1.34	0.0528
4659267	1.38	0.0544
4659268	1.42	0.0560
4659269	1.46	0.0575
4659270	1.50	0.0591
4659271	1.54	0.0607
4659272	1.58	0.0623
4659273	1.62	0.0638
4659274	1.66	0.0654
4659275	1.70	0.0670
4659283	2.02	0.0796
4659284	2.06	0.0812

PRELOAD ADJUSTMENT W/O SHIM

(1) Remove the bearing cup from the differential bearing retainer using Miller special Tool 6062A.

(2) Remove existing shim from under bearing cup.

(3) Reinstall the bearing cup into the retainer using Miller Special Tool 6061, and C-4171.

NOTE: Oil baffle is not required when making the shim calculation.

(4) Install the bearing retainer into the case. Torque bolts to 28 N·m (250 in. lbs.).

(5) Position the transaxle assembly vertically on the support stand and install Miller Special Tool L-4436-A into the bearing retainer.

(6) Rotate the differential at least one full revolution to ensure the tapered roller bearings are fully seated.

(7) Attach a dial indicator to the case and zero the dial. Place the tip on the end of Special Tool L-4436-A.

(8) Place a large screwdriver to each side of the ring gear and lift. Check the dial indicator for the amount of end play.

FINAL DRIVE (Continued)

CAUTION: Do not damage the transaxle case and/or differential retainer sealing surface.

(9) Using the end play measurement that was determined, add 0.18mm (0.007 inch). This should give you between 5-18 inch pounds of bearing preload. Refer to the Differential Bearing Shim Chart to determine which shim to use.

(10) Remove the differential bearing retainer. Remove the bearing cup.

(11) Install the oil baffle. Install the proper shim combination under the bearing cup.

(12) Install the differential bearing retainer. Seal the retainer to the housing with Mopar® Silicone Rubber Adhesive Sealant. Torque bolts to 28 N·m (250 in. lbs.).

(13) Using Miller Special Tool L-4436-A and an inch-pound torque wrench, check the turning torque of the differential (Fig. 204). The turning torque should be between 5-18 inch-pounds.

NOTE: If turning torque is too high install a 0.05mm (0.002 inch) thicker shim. If the turning torque is too low, install a 0.05mm (0.002 inch) thinner shim. Repeat until 5-18 inch-pounds of turning torque is obtained.

FLUID

STANDARD PROCEDURE

FLUID LEVEL AND CONDITION CHECK

NOTE: Only transmission fluid of the type labeled Mopar ATF+4 (Automatic Transmission Fluid) should be used in this transaxle.

FLUID LEVEL CHECK

The transmission sump has a fluid level indicator (dipstick) to check oil similar to most automatic transmissions. It is located on the left side of the engine. Be sure to wipe all dirt from dipstick handle before removing.

The torque converter fills in both the P Park and N Neutral positions. Place the selector lever in P Park to be sure that the fluid level check is accurate. **The engine should be running at idle speed for at least one minute, with the vehicle on level ground.** At normal operating temperature 82° C (180° F), the fluid level is correct if it is in the HOT region on the oil level indicator (Fig. 205). The fluid level should be within the COLD region of the dipstick at 27° C (80° F) fluid temperature.

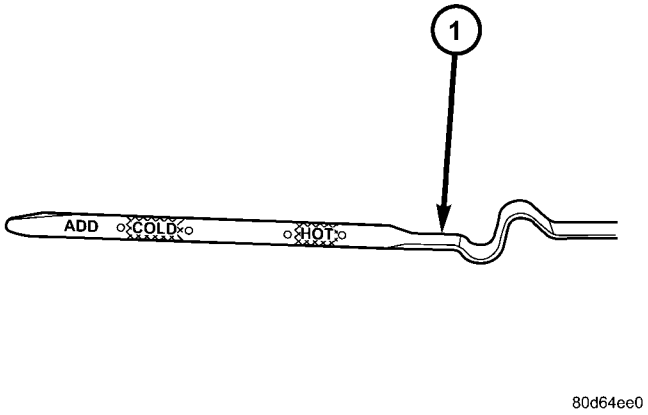

Fig. 205 Fluid Level Indicator

1 - FLUID LEVEL INDICATOR

FLUID LEVEL CHECK USING DRB

NOTE: Engine and Transaxle should be at normal operating temperature before performing this procedure.

(1) Start engine and apply parking brake.

(2) Hook up DRB scan tool and select transmission.

(3) Select sensors.

(4) Read the transmission temperature value.

(5) Compare the fluid temperature value with the fluid temperature chart (Fig. 206).

(6) Adjust transmission fluid level shown on the indicator according to the chart.

(7) Check transmission for leaks.

Low fluid level can cause a variety of conditions because it allows the pump to take in air along with the fluid. As in any hydraulic system, air bubbles make the fluid spongy, therefore, pressures will be low and build up slowly.

Improper filling can also raise the fluid level too high. When the transaxle has too much fluid, the gears churn up foam and cause the same conditions which occur with a low fluid level.

In either case, air bubbles can cause overheating and/or fluid oxidation, and varnishing. This can interfere with normal valve, clutch, and accumulator operation. Foaming can also result in fluid escaping from the transaxle vent where it may be mistaken for a leak.

FLUID CONDITION

Along with fluid level, it is important to check the condition of the fluid. When the fluid smells burned, and is contaminated with metal or friction material particles, a complete transaxle recondition is probably required. Be sure to examine the fluid on the dip-

FLUID (Continued)

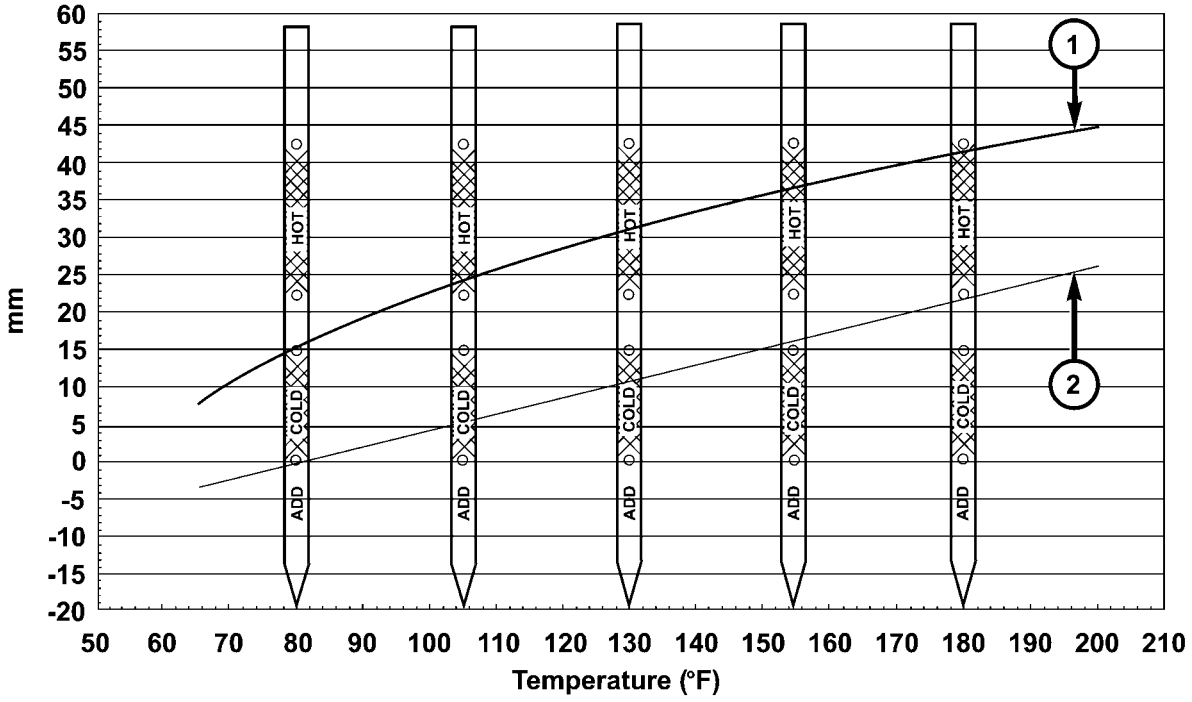

Fig. 206 Transmission Fluid Temperature Chart

1 - MAX. LEVEL
2 - MIN. LEVEL

stick closely. If there is any doubt about its condition, drain out a sample for a double check.

Mopar® ATF+4 (Automatic Transmission Fluid) when new is red in color. The ATF is dyed red so it can be identified from other fluids used in the vehicle such as engine oil or antifreeze. The red color is not permanent and is not an indicator of fluid condition. As the vehicle is driven, the ATF will begin to look darker in color and may eventually become brown. **This is normal.** ATF+4 also has a unique odor that may change with age. Consequently, **odor and color cannot be used to indicate the fluid condition or the need for a fluid change.**

After the fluid has been checked, seat the dipstick fully to seal out water and dirt.

STANDARD PROCEDURE - FLUID AND FILTER SERVICE

NOTE: Refer to the maintenance schedules in LUBRICATION and MAINTENANCE, or the vehicle owner's manual, for the recommended maintenance (fluid/filter change) intervals for this transaxle.

NOTE: Only fluids of the type labeled Mopar® ATF+4 (Automatic Transmission Fluid) should be used. A filter change should be made at the time of the transmission oil change. The magnet (on the inside of the oil pan) should also be cleaned with a clean, dry cloth.

NOTE: If the transaxle is disassembled for any reason, the fluid and filter should be changed.

FLUID (Continued)

FLUID/FILTER SERVICE (RECOMMENDED)

(1) Raise vehicle on a hoist. Refer to LUBRICATION and MAINTENANCE for proper procedures. Place a drain container with a large opening, under transaxle oil pan.

(2) Loosen pan bolts and tap the pan at one corner to break it loose allowing fluid to drain, then remove the oil pan.

(3) Install a new filter and o-ring on bottom of the valve body (Fig. 207).

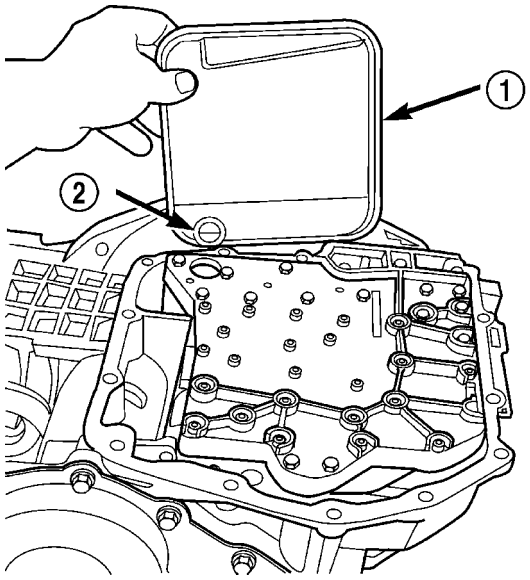

Fig. 207 Filter and O-Ring

1 - OIL FILTER
2 - O-RING

(4) Clean the oil pan and magnet. Reinstall pan using new Mopar Silicone Adhesive sealant. Tighten oil pan bolts to 19 N·m (165 in. lbs.).

(5) Pour four quarts of Mopar® ATF+4 (Automatic Transmission Fluid) through the dipstick opening.

(6) Start engine and allow to idle for at least one minute. Then, with parking and service brakes applied, move selector lever momentarily to each position, ending in the park or neutral position.

(7) Check the transaxle fluid level and add an appropriate amount to bring the transaxle fluid level to 3mm (1/8 in.) below the lowest mark on the dipstick (Fig. 208).

(8) Recheck the fluid level after the transaxle has reached normal operating temperature (180°F.). Refer to Fluid Level and Condition Check for the proper fluid fill procedure.

(9) To prevent dirt from entering transaxle, make certain that dipstick is fully seated into the dipstick opening.

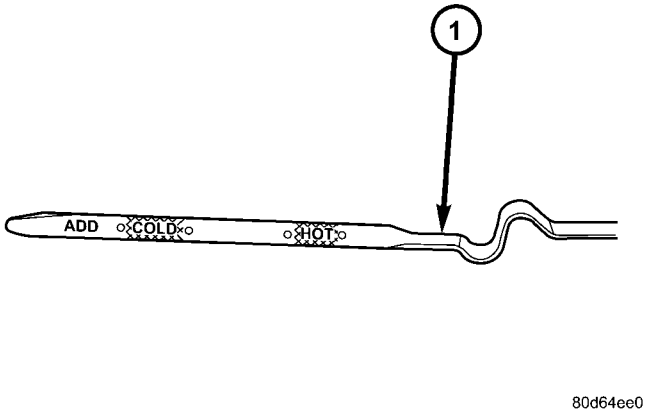

Fig. 208 Fluid Level Indicator

1 - FLUID LEVEL INDICATOR

DIPSTICK TUBE FLUID SUCTION METHOD (ALTERNATIVE)

(1) When performing the fluid suction method, make sure the transaxle is at full operating temperature.

(2) To perform the dipstick tube fluid suction method, use a suitable fluid suction device (Vacula™ or equivalent).

(3) Insert the fluid suction line into the dipstick tube.

NOTE: Verify that the suction line is inserted to the lowest point of the transaxle oil pan. This will ensure complete evacuation of the fluid in the pan.

(4) Follow the manufacturers recommended procedure and evacuate the fluid from the transaxle.

(5) Remove the suction line from the dipstick tube.

(6) Pour four quarts of Mopar® ATF+4 (Automatic Transmission Fluid) through the dipstick opening.

(7) Start engine and allow to idle for at least one minute. Then, with parking and service brakes applied, move selector lever momentarily to each position, ending in the park or neutral position.

(8) Check the transaxle fluid level and add an appropriate amount to bring the transaxle fluid level to 3mm (1/8 in.) below the lowest mark on the dipstick (Fig. 208).

(9) Recheck the fluid level after the transaxle has reached normal operating temperature (180°F.). (Refer to 21 - TRANSMISSION/TRANSAXLE/AUTOMATIC - 41TE/FLUID - STANDARD PROCEDURE)

(10) To prevent dirt from entering transaxle, make certain that dipstick is fully seated into the dipstick opening.

GEAR SHIFT CABLE

REMOVAL

(1) Disconnect battery cables.
(2) Remove battery shield.
(3) Remove battery.
(4) Remove speed control servo and position out of way.
(5) Disconnect gear shift cable at manual valve lever (Fig. 209).
(6) Disconnect gear shift cable from upper mount bracket (Fig. 209).

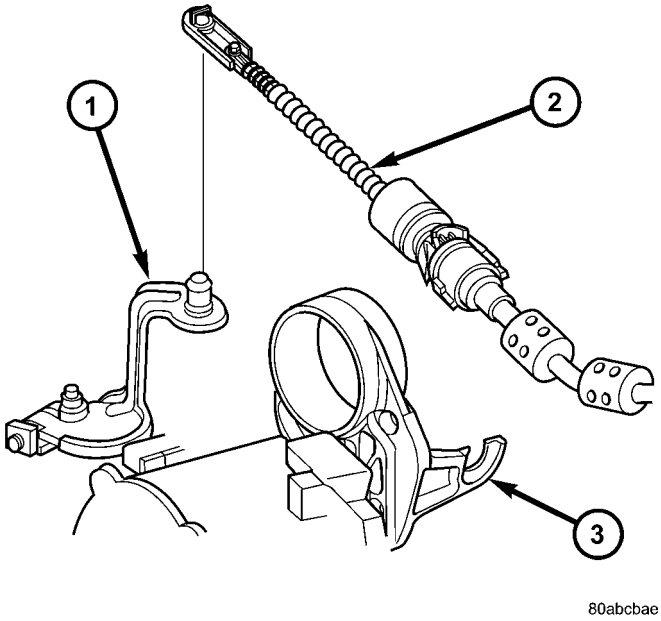

Fig. 209 Gearshift Cable at Transaxle - Typical

1 - MANUAL VALVE LEVER
2 - GEAR SHIFT CABLE
3 - UPPER MOUNT BRACKET

(7) Remove instrument panel lower silencer (Fig. 210).

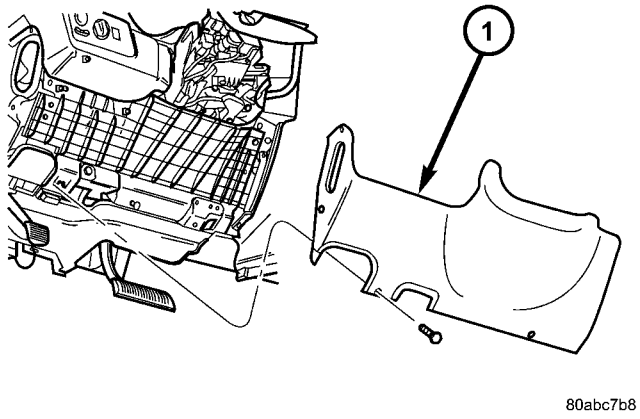

Fig. 210 Instrument Panel Lower Silencer

1 - INSTRUMENT PANEL LOWER SILENCER

(8) Remove knee bolster (Fig. 211).

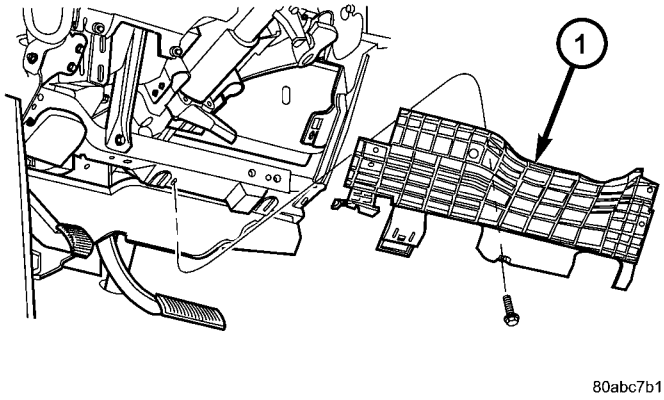

Fig. 211 Knee Bolster

1 - KNEE BOLSTER

GEAR SHIFT CABLE (Continued)

(9) Disconnect gear shift cable from gear shift lever (Fig. 212).

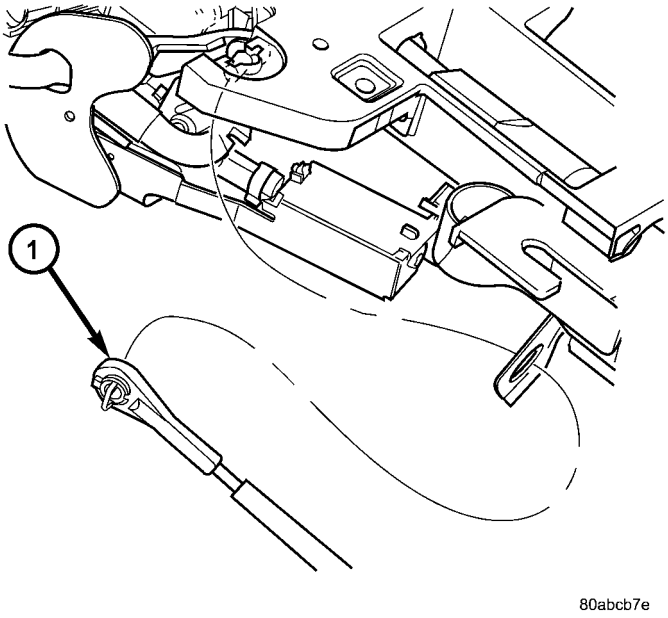

Fig. 212 Gearshift Cable at Column

1 - GEAR SHIFT CABLE

(10) Remove gear shift cable from column bracket (Fig. 212).

(11) Disengage grommet from dash panel (Fig. 213) and remove gear shift cable from inside vehicle.

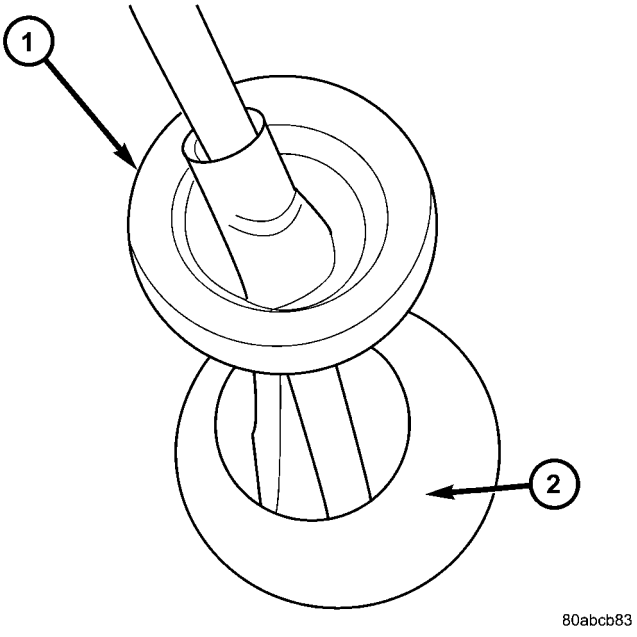

Fig. 213 Gearshift Cable/Grommet at Dash Panel

1 - CABLE GROMMET
2 - DASH PANEL

INSTALLATION

(1) Fish gear shift cable dash panel opening into engine compartment and secure grommet (Fig. 214).

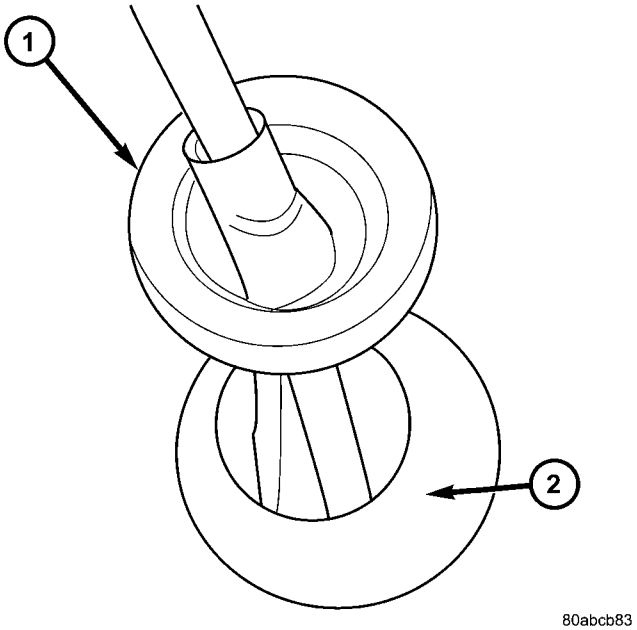

Fig. 214 Gearshift Cable/Grommet at Dash Panel

1 - CABLE GROMMET
2 - DASH PANEL

(2) Install gear shift cable through column bracket (Fig. 215) until audible “click” is heard.

(3) Connect gear shift cable to gear shift lever (Fig. 215).

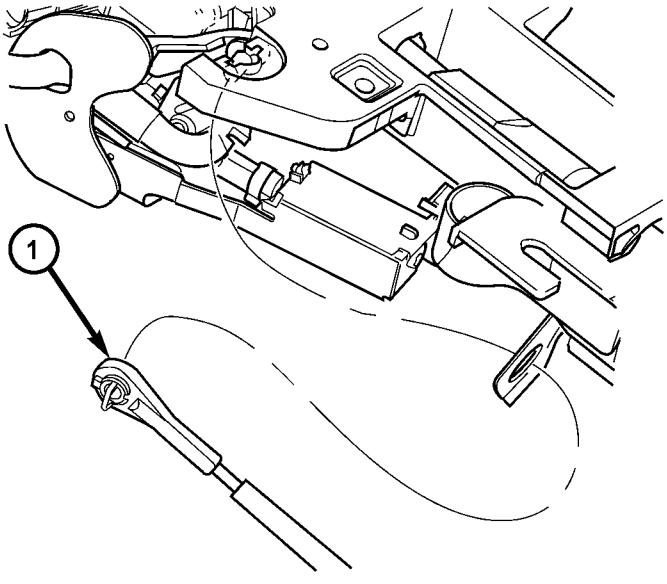

Fig. 215 Gearshift Cable at Column

1 - GEAR SHIFT CABLE

GEAR SHIFT CABLE (Continued)

(4) Install knee bolster (Fig. 216).

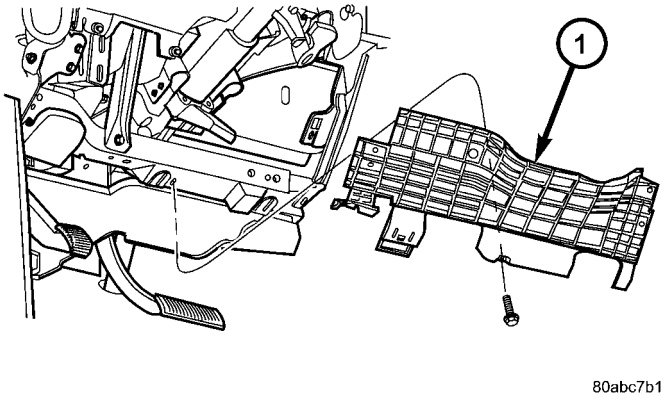

Fig. 216 Knee Bolster

1 - KNEE BOLSTER

(5) Install instrument panel lower silencer (Fig. 217).

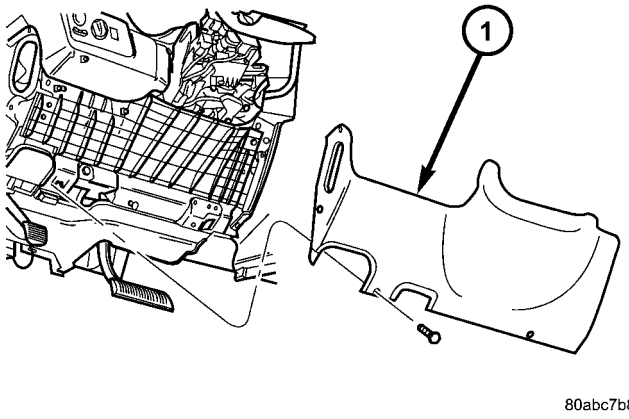

Fig. 217 Instrument Panel Lower Silencer

1 - INSTRUMENT PANEL LOWER SILENCER

(6) Install gear shift cable to transaxle upper mount bracket (Fig. 218). An audible “click” should be heard.

(7) Connect gear shift cable end to transaxle manual valve lever (Fig. 218).

(8) Adjust gearshift cable. (Refer to 21 - TRANSMISSION/TRANSAXLE/AUTOMATIC - 41TE/GEAR SHIFT CABLE - ADJUSTMENTS)

(9) Install speed control servo into position.

(10) Install battery.

(11) Install battery shield.

(12) Connect battery cables.

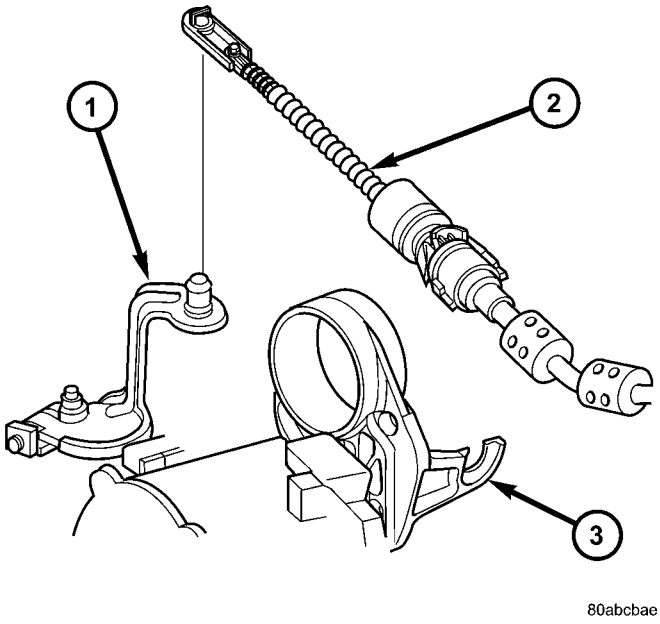

Fig. 218 Gearshift Cable at Transaxle

1 - MANUAL VALVE LEVER
2 - GEAR SHIFT CABLE
3 - UPPER MOUNT BRACKET

ADJUSTMENTS

GEARSHIFT CABLE ADJUSTMENT

VERIFICATION

(1) Place gearshift lever in gated park (P).

(2) Attempt to move vehicle by rocking back and forth on level ground. If vehicle does not move, attempt to start engine. If engine starts, the park position is correct.

(3) Set parking brake.

(4) Turn key to on/run and depress brake pedal. Place gearshift lever in neutral (N).

(5) Attempt to start engine. If engine starts in both neutral (N) or park (P), gearshift cable is adjusted properly. No adjustment is required.

(6) If engine does not start in either park (P) or neutral (N), perform adjustment procedure.

ADJUSTMENT

(1) Park the vehicle on level ground and set the parking brake.

(2) Place the gearshift lever in gated park (P) and remove ignition key.

(3) Loosen the cable adjustment screw at the transaxle manual valve lever (Fig. 219).

(4) Pull the gearshift lever fully forward to the park detent position.

(5) Release the park brake, then rock the vehicle to assure it is in park. Reset the park brake.

GEAR SHIFT CABLE (Continued)

(6) Tighten the cable adjustment screw to 8 N·m (70 in. lbs.). Gearshift cable should now be properly adjusted.

(7) Verify adjustment by using the verification procedure.

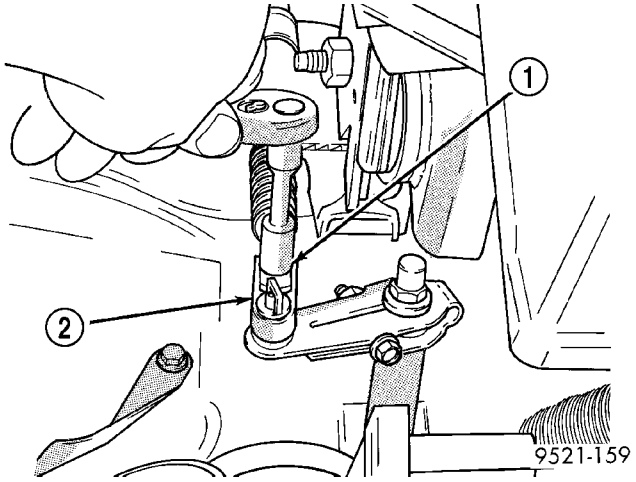

Fig. 219 Gearshift Cable Adjustment

1 - GEARSHIFT CABLE ADJUSTMENT SCREW
2 - GEARSHIFT CABLE

HOLDING CLUTCHES

DESCRIPTION

Two hydraulically applied multi-disc clutches are used to hold planetary geartrain components stationary while the input clutches drive others. The 2/4 and Low/Reverse clutches are considered holding clutches and are contained at the rear of the transaxle case. (Fig. 220).

OPERATION

NOTE: Refer to the "Elements In Use" chart in Diagnosis and Testing for a collective view of which clutch elements are applied at each position of the selector lever.

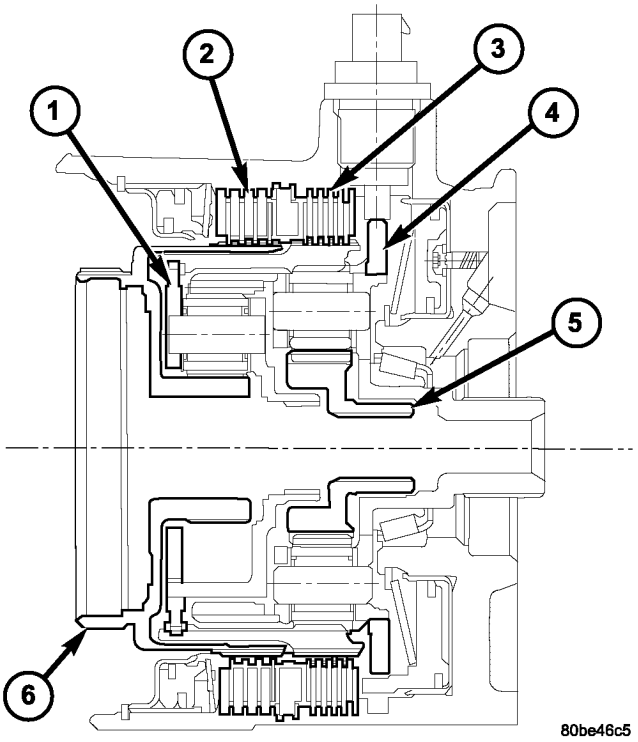

Fig. 220 2/4 and Low/Reverse Clutches

1 - FRONT PLANET CARRIER/REAR ANNULUS
2 - 2/4 CLUTCH
3 - L/R CLUTCH
4 - REAR PLANET CARRIER/FRONT ANNULUS
5 - REAR SUN GEAR
6 - FRONT SUN GEAR ASSEMBLY

2/4 CLUTCH

The 2/4 clutch is hydraulically applied in second and fourth gears by pressurized fluid against the 2/4 clutch piston. When the 2/4 clutch is applied, the front sun gear assembly is held or grounded to the transaxle case.

LOW/REVERSE CLUTCH

The Low/Reverse clutch is hydraulically applied in park, reverse, neutral, and first gears by pressurized fluid against the Low/Reverse clutch piston. When the Low/Reverse clutch is applied, the front planet carrier/rear annulus assembly is held or grounded to the transaxle case.

INPUT CLUTCH ASSEMBLY

DISASSEMBLY

(1) Mount input clutch assembly to Input Clutch Pressure Fixture (Tool 8391).

(2) Tap down reverse clutch reaction plate to release pressure from snap ring (Fig. 221).

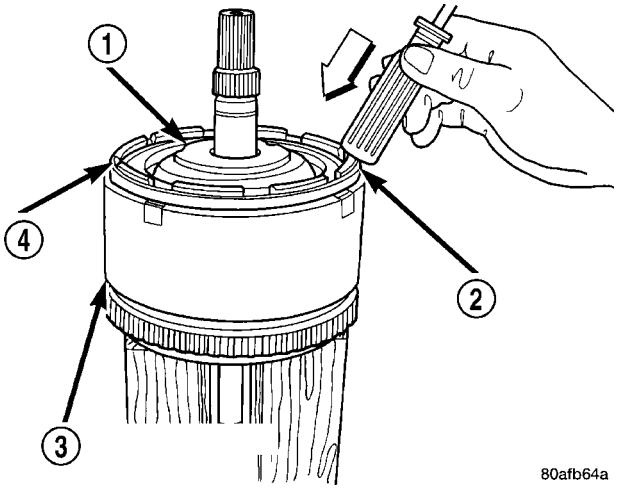

Fig. 221 Tapping Reaction Plate

1 - #4 THRUST PLATE (SELECT)
2 - TAP DOWN REVERSE CLUTCH REACTION PLATE TO REMOVE OR INSTALL SNAP RING
3 - INPUT SHAFT CLUTCHES RETAINER ASSEMBLY
4 - REVERSE CLUTCH REACTION PLATE

(3) Remove reverse clutch snap ring (Fig. 222).

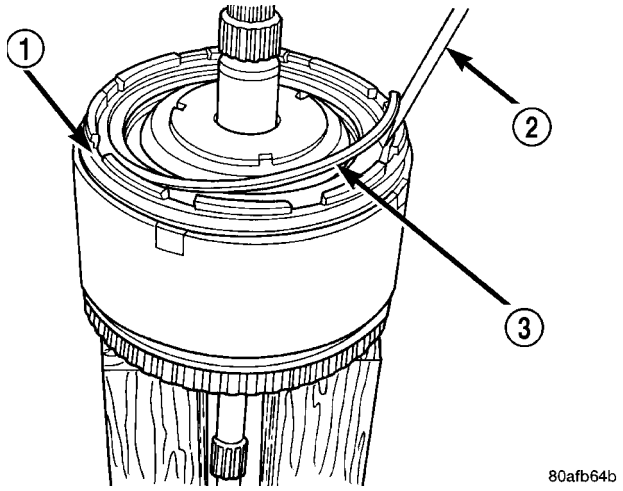

Fig. 222 Reverse Clutch Snap Ring

1 - REACTION PLATE
2 - SCREWDRIVER
3 - REVERSE CLUTCH SNAP RING (SELECT)

(4) Pry up and remove reverse clutch reaction plate (Fig. 223).

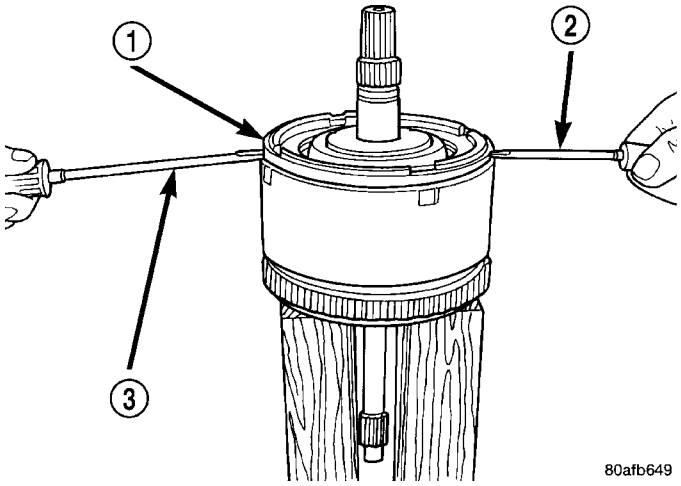

Fig. 223 Pry Reverse Clutch Reaction Plate

1 - REVERSE CLUTCH REACTION PLATE
2 - SCREWDRIVER
3 - SCREWDRIVER

INPUT CLUTCH ASSEMBLY (Continued)

(5) Remove reverse clutch pack (Fig. 224). **Tag components for assembly identification.**

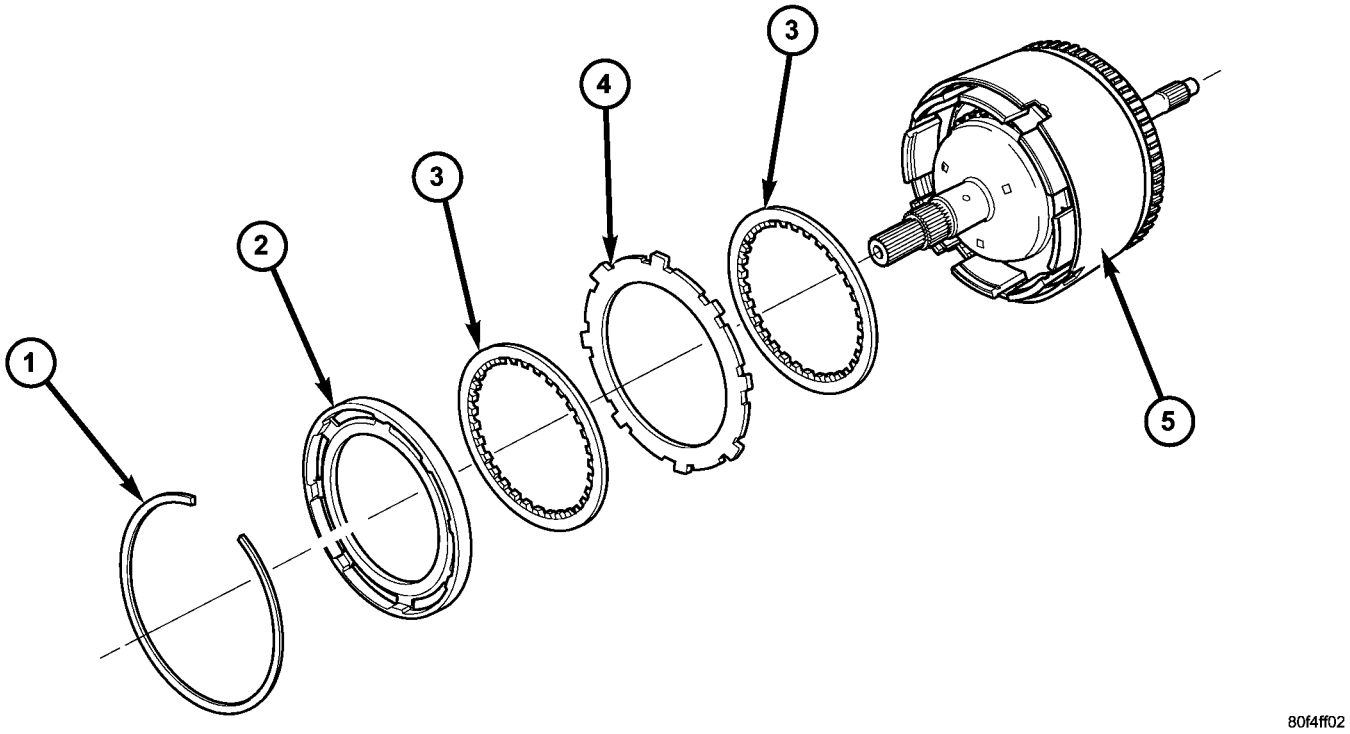

Fig. 224 Reverse Clutch Assembly

1 - SNAP RING
2 - REACTION PLATE
3 - CLUTCH DISC (2)
4 - CLUTCH PLATE (1)
5 - INPUT CLUTCH ASSEMBLY

INPUT CLUTCH ASSEMBLY (Continued)

(6) Remove the OD/Reverse pressure plate snap ring (Fig. 225).
(7) Remove OD/Reverse pressure plate (Fig. 225).
(8) Remove OD/Reverse pressure plate wave snap ring (Fig. 225).
(9) Remove OD clutch pack (Fig. 225). **Tag components for assembly identification.**

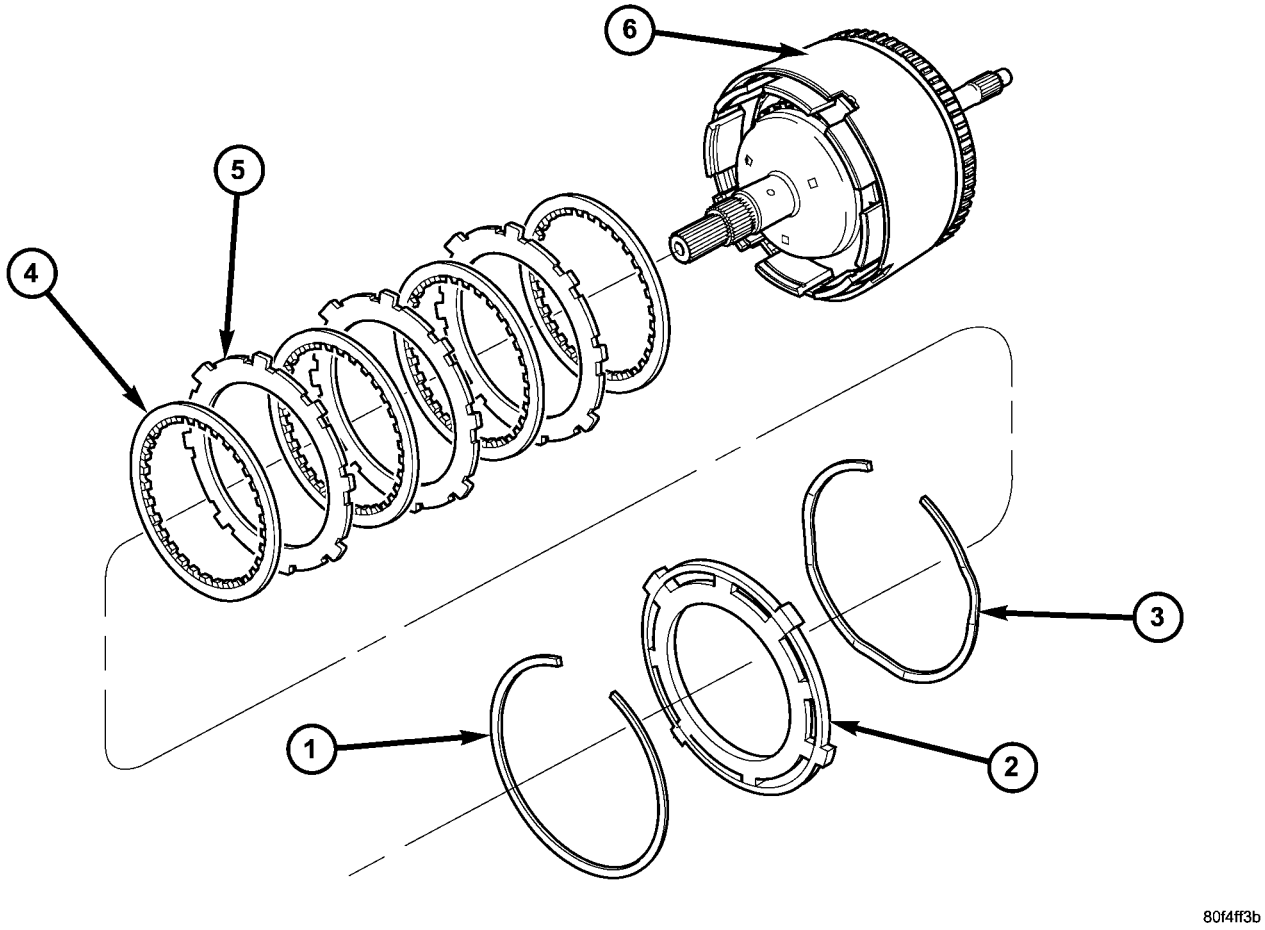

Fig. 225 Overdrive Clutch Assembly

1 - SNAP RING
2 - OD/REVERSE PRESSURE PLATE
3 - SNAP RING (WAVE)
4 - CLUTCH DISC (4)
5 - CLUTCH STEEL (3)
6 - INPUT CLUTCH ASSEMBLY

INPUT CLUTCH ASSEMBLY (Continued)

(10) Remove and inspect OD and UD Shafts, as well as #3 thrust washer and plate, and #2 needle bearing (Fig. 226).

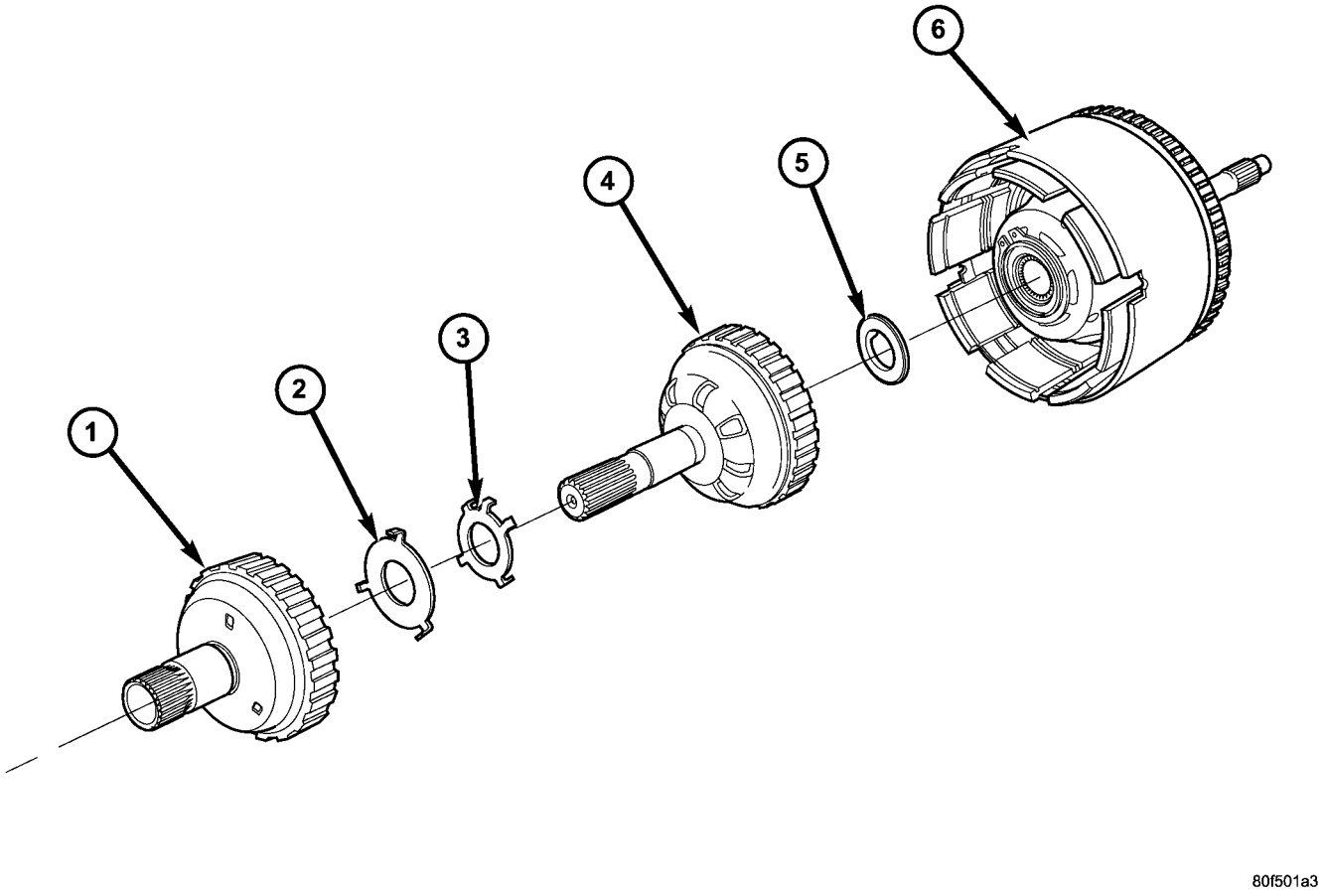

Fig. 226 Overdrive/Underdrive Shafts

1 - OVERDRIVE SHAFT
2 - #3 THRUST PLATE (3 TABS)
3 - #3 THRUST WASHER (5 TABS)
4 - UNDERDRIVE SHAFT
5 - #2 NEEDLE BEARING (3 TABS)
6 - INPUT CLUTCH ASSEMBLY

INPUT CLUTCH ASSEMBLY (Continued)

(11) Remove the OD/UD reaction plate tapered snap ring, reaction plate, and first friction disc (Fig. 227).

(12) Remove the UD clutch flat snap ring and rest of UD clutch pack (Fig. 227). **Tag clutch pack for assembly identification.**

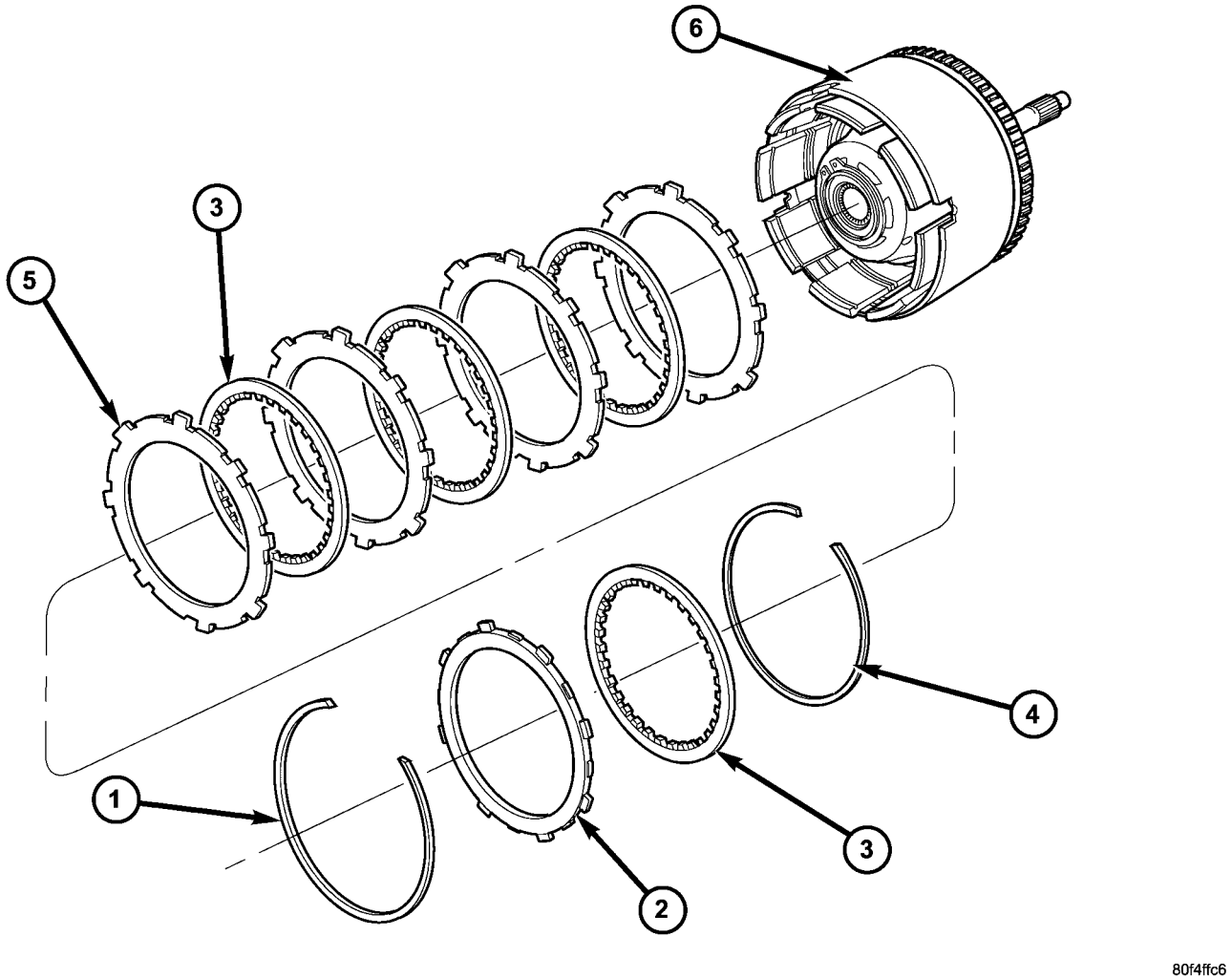

Fig. 227 Underdrive Clutch Assembly

1 - SNAP RING (TAPERED)
2 - OD/UD REACTION PLATE
3 - CLUTCH DISC
4 - SNAP RING (FLAT)
5 - CLUTCH PLATE
6 - INPUT CLUTCH ASSEMBLY

INPUT CLUTCH ASSEMBLY (Continued)

CAUTION: Compress return spring just enough to remove or install snap ring.

(13) Using Tool 5059A and an arbor press, compress UD clutch piston/spring enough to remove snap ring (Fig. 228) (Fig. 229).

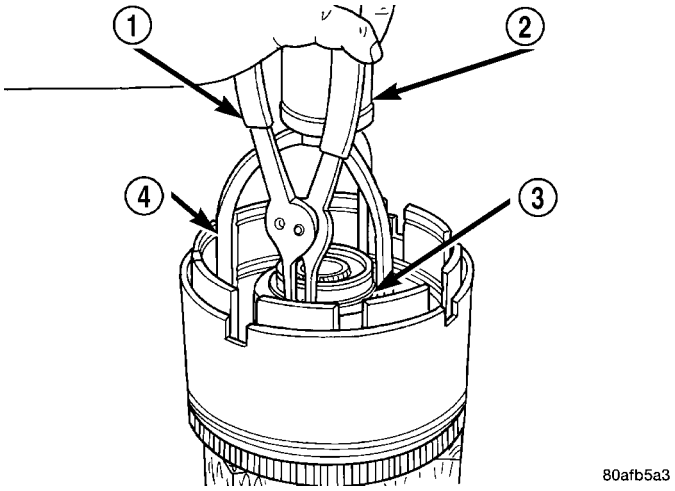

Fig. 228 UD Spring Retainer Snap Ring

1 - SNAP RING PLIERS
2 - ARBOR PRESS RAM
3 - SNAP RING
4 - SPECIAL TOOL 5059A

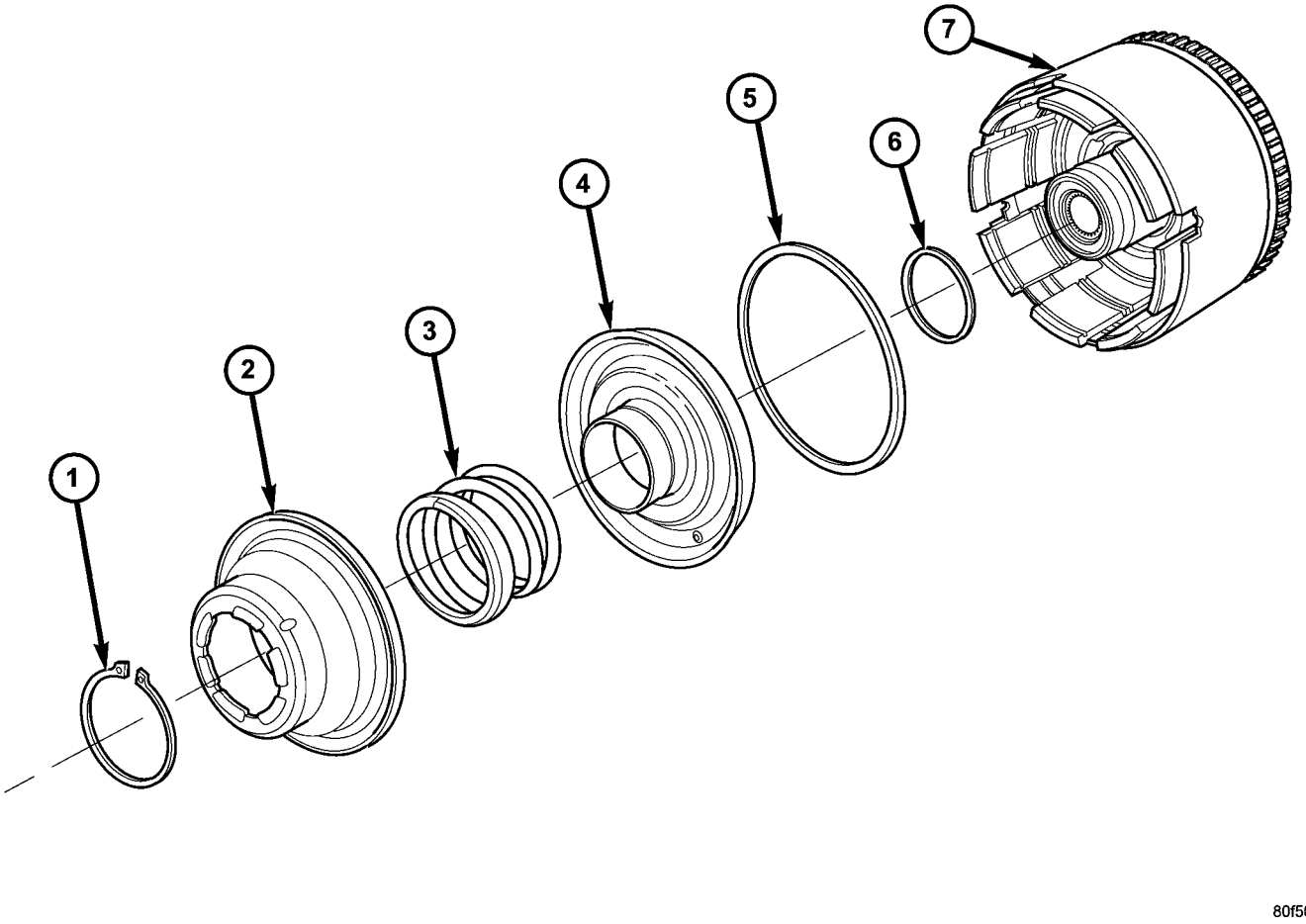

Fig. 229 Underdrive Clutch Piston, Spring and Retainer

1 - SNAP RING
2 - SPRING RETAINER
3 - SPRING
4 - UD CLUTCH PISTON
5 - SEAL, OUTER
6 - SEAL, INNER
7 - INPUT CLUTCH ASSEMBLY

INPUT CLUTCH ASSEMBLY (Continued)

(14) Remove spring retainer, spring, and piston (Fig. 229).

(15) Remove input hub tapered snap ring (Fig. 230) (Fig. 236).

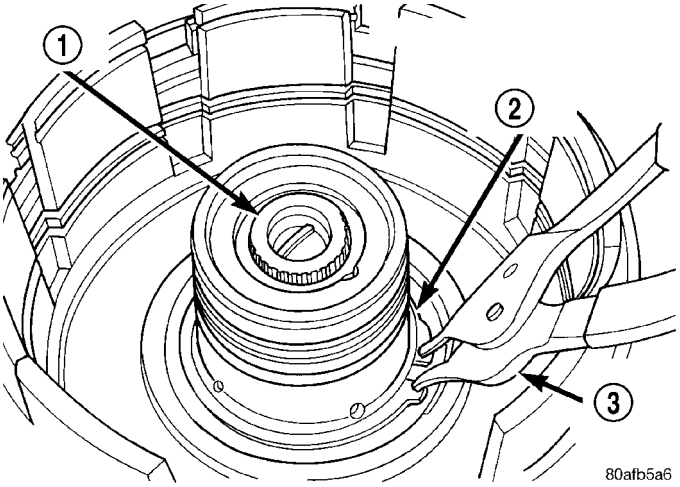

Fig. 230 Input Hub Tapered Snap Ring

1 - INPUT SHAFT
2 - INPUT HUB SNAP RING (TAPERED SIDE UP WITH TABS IN CAVITY)
3 - SNAP RING PLIERS

(16) Tap on input hub with soft faced hammer and separate input hub from OD/Reverse piston and clutch retainer (Fig. 231).

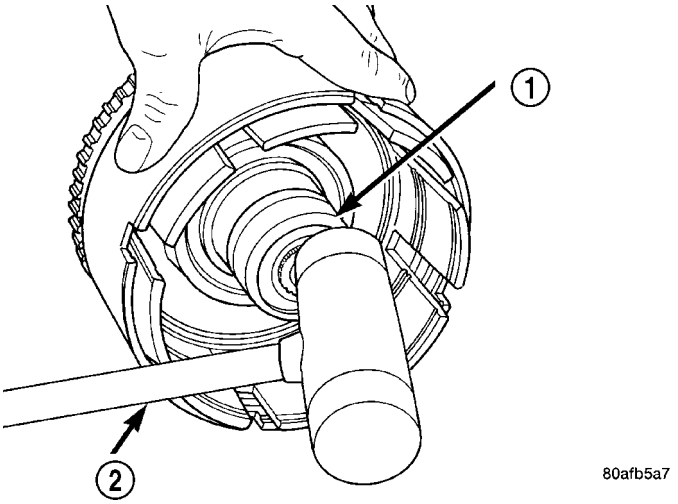

Fig. 231 Tap on Input Hub

1 - INPUT SHAFT AND HUB ASSEMBLY
2 - PLASTIC HAMMER

(17) Separate clutch retainer from OD/Reverse piston (Fig. 232).

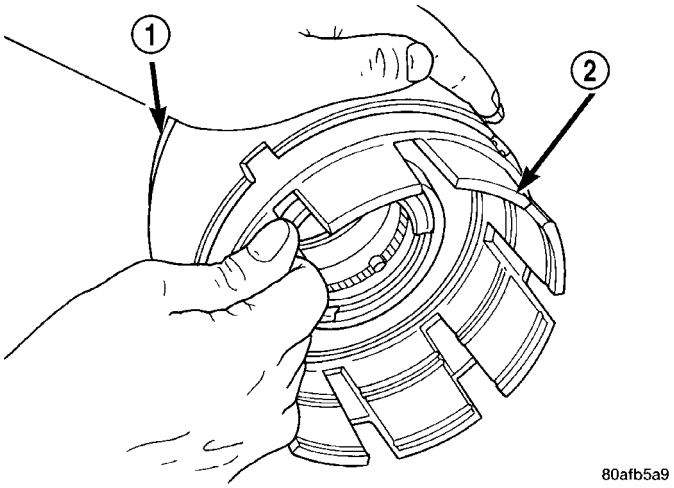

Fig. 232 Pull Retainer from Piston

1 - OVERDRIVE/REVERSE PISTON
2 - INPUT CLUTCHES RETAINER

(18) Using Tool 6057 and an arbor press, compress return OD/Reverse piston return spring just enough to remove snap ring (Fig. 233).

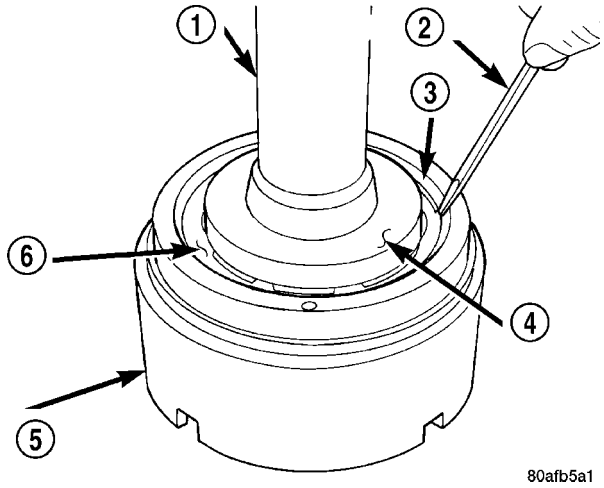

Fig. 233 Remove Snap Ring

1 - ARBOR PRESS RAM (COMPRESS RETURN SPRING JUST ENOUGH TO REMOVE OR INSTALL SNAP RING)
2 - SCREWDRIVER
3 - SNAP RING
4 - SPECIAL TOOL 6057
5 - OD/REVERSE PISTON
6 - RETURN SPRING

INPUT CLUTCH ASSEMBLY (Continued)

(19) Remove input shaft to input clutch hub snap ring (Fig. 234) (Fig. 236).

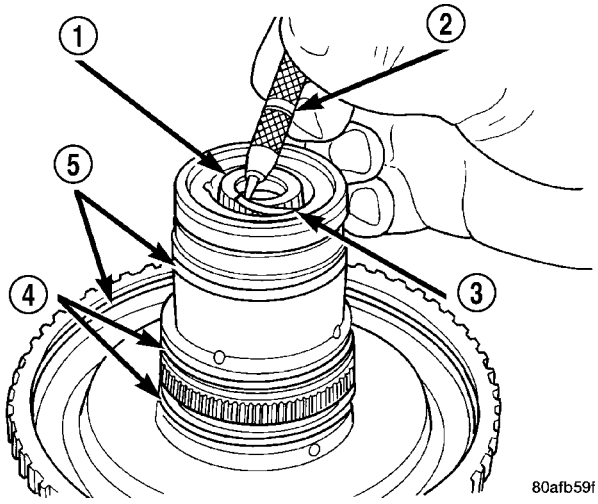

Fig. 234 Remove Input Shaft Snap Ring

1 - INPUT SHAFT
2 - SHARP-POINTED TOOL
3 - SNAP RING
4 - O-RINGS
5 - SEALS

(20) Using a suitably sized socket and an arbor press, remove input shaft from input shaft hub (Fig. 235).

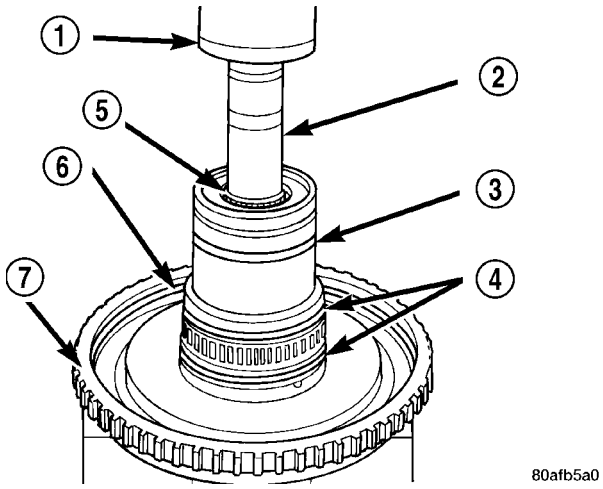

Fig. 235 Remove Input Shaft

1 - ARBOR PRESS RAM
2 - SOCKET
3 - SEAL
4 - O-RINGS
5 - INPUT SHAFT
6 - SEAL
7 - INPUT SHAFT HUB ASSEMBLY

INPUT CLUTCH ASSEMBLY (Continued)

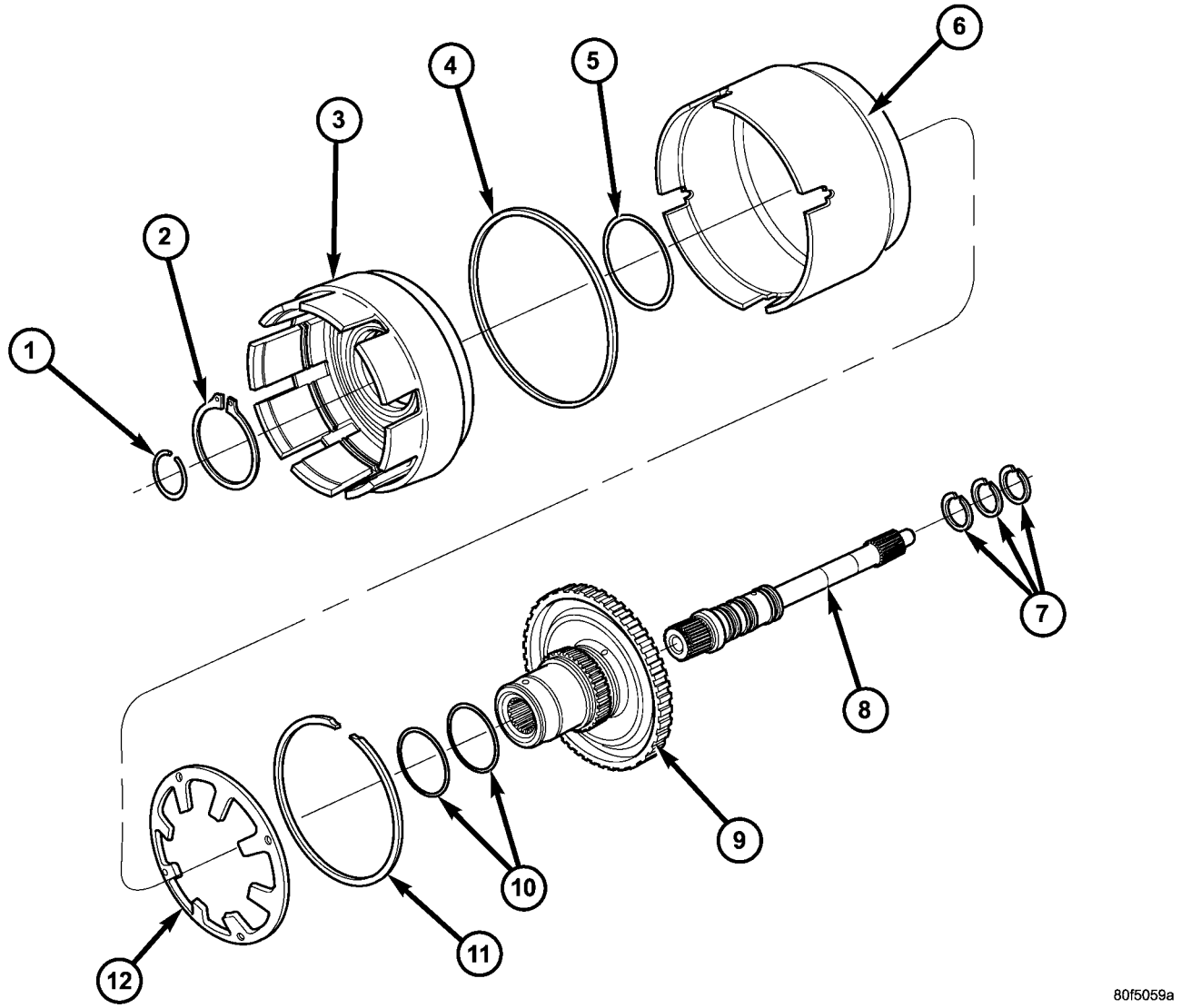

Fig. 236 Input Clutch Hub, Retainer, and OD/Reverse Piston

1 - SNAP RING (INPUT SHAFT)
2 - SNAP RING
3 - CLUTCH RETAINER
4 - SEAL, OUTER
5 - SEAL, INNER
6 - OD/REVERSE PISTON
7 - SEAL, INPUT SHAFT
8 - SHAFT, INPUT
9 - HUB
10 - SEAL
11 - SNAP RING
12 - BELLEVILLE SPRING

INPUT CLUTCH ASSEMBLY (Continued)

ASSEMBLY

Use petrolatum on all seals to ease assembly of components.

(1) Using an arbor press, install input shaft to input shaft hub (Fig. 237).

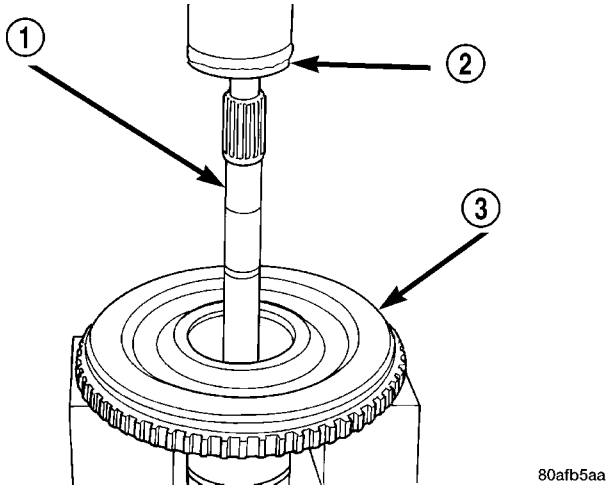

Fig. 237 Install Input Shaft

1 - INPUT SHAFT
2 - ARBOR PRESS RAM
3 - INPUT SHAFT HUB ASSEMBLY

(2) Install input shaft snap ring (Fig. 238).

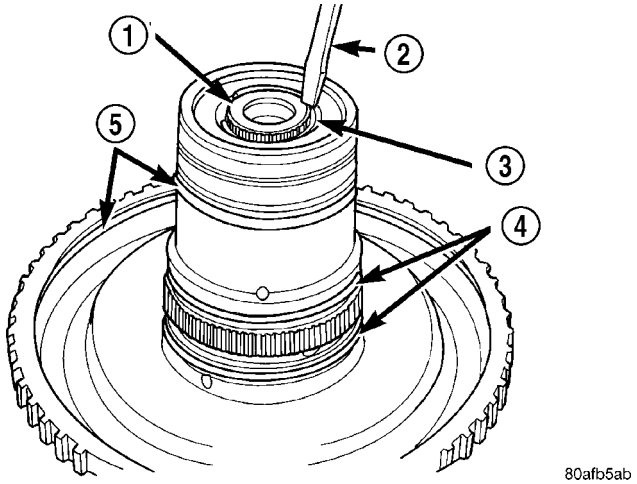

Fig. 238 Install Input Shaft Snap Ring

1 - INPUT SHAFT
2 - SCREWDRIVER (DO NOT SCRATCH BEARING SURFACE)
3 - SNAP RING
4 - O-RINGS
5 - SEALS

(3) Using an arbor press and Tool 6057, Install OD/Reverse piston return spring and snap ring (Fig. 239) (Fig. 240).

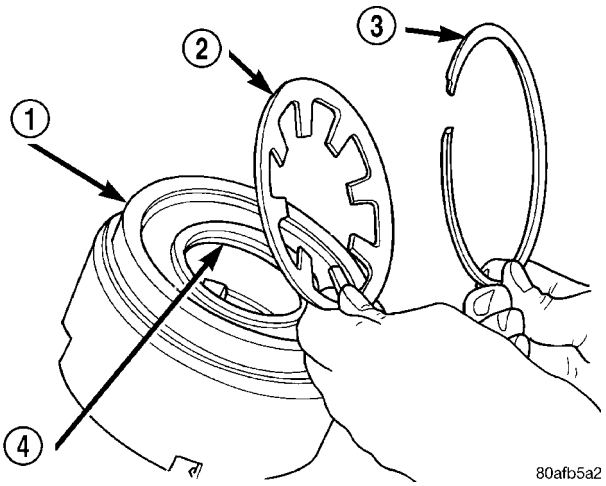

Fig. 239 Return Spring and Snap Ring

1 - OD/REVERSE PISTON
2 - RETURN SPRING
3 - SNAP RING
4 - O-RING

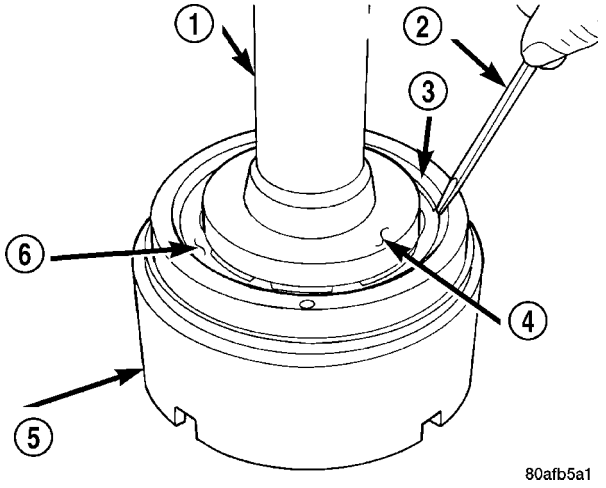

Fig. 240 Install Snap Ring

1 - ARBOR PRESS RAM (COMPRESS RETURN SPRING JUST ENOUGH TO REMOVE OR INSTALL SNAP RING)
2 - SCREWDRIVER
3 - SNAP RING
4 - SPECIAL TOOL 6057
5 - OD/REVERSE PISTON
6 - RETURN SPRING

INPUT CLUTCH ASSEMBLY (Continued)

(4) Install the OD/Reverse piston assembly to the input clutch retainer as shown in (Fig. 241).

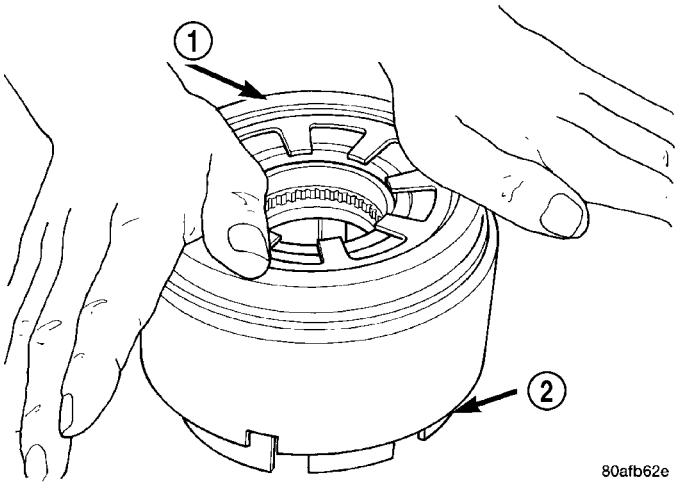

Fig. 241 Install OD/Reverse Piston

1 - PUSH DOWN TO INSTALL OVERDRIVE/REVERSE PISTON
2 - INPUT CLUTCHES RETAINER

(5) Install the input hub/shaft assy. to the OD/Reverse piston/clutch retainer assy. (Fig. 242).

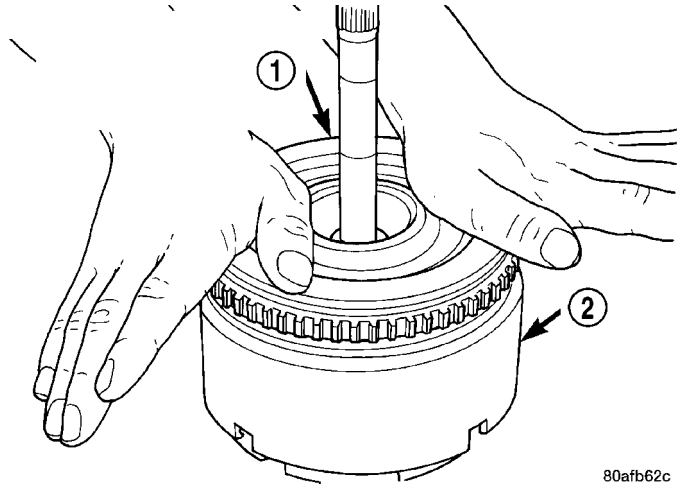

Fig. 242 Install Input Shaft Hub Assembly

1 - PUSH DOWN TO INSTALL INPUT SHAFT HUB ASSEMBLY (ROTATE TO ALIGN SPLINES)
2 - OD/REV. PISTON

(6) Install input hub tapered snap ring (Fig. 243) (Fig. 244).

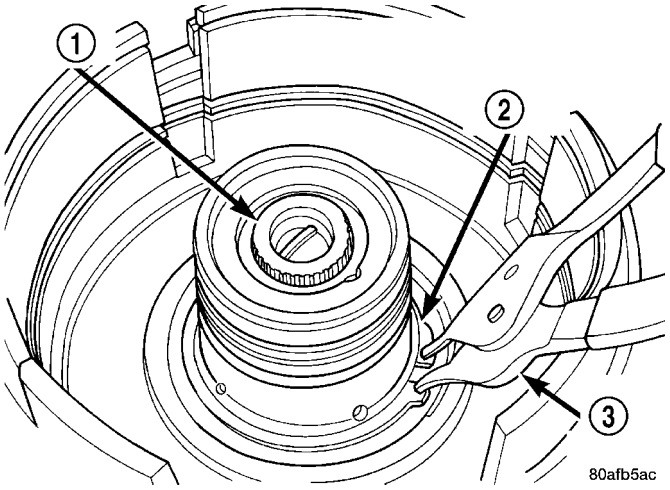

Fig. 243 Install Input Hub Tapered Snap Ring

1 - INPUT SHAFT
2 - INPUT HUB SNAP RING (TAPERED SIDE UP WITH TABS IN CAVITY)
3 - SNAP RING PLIERS

INPUT CLUTCH ASSEMBLY (Continued)

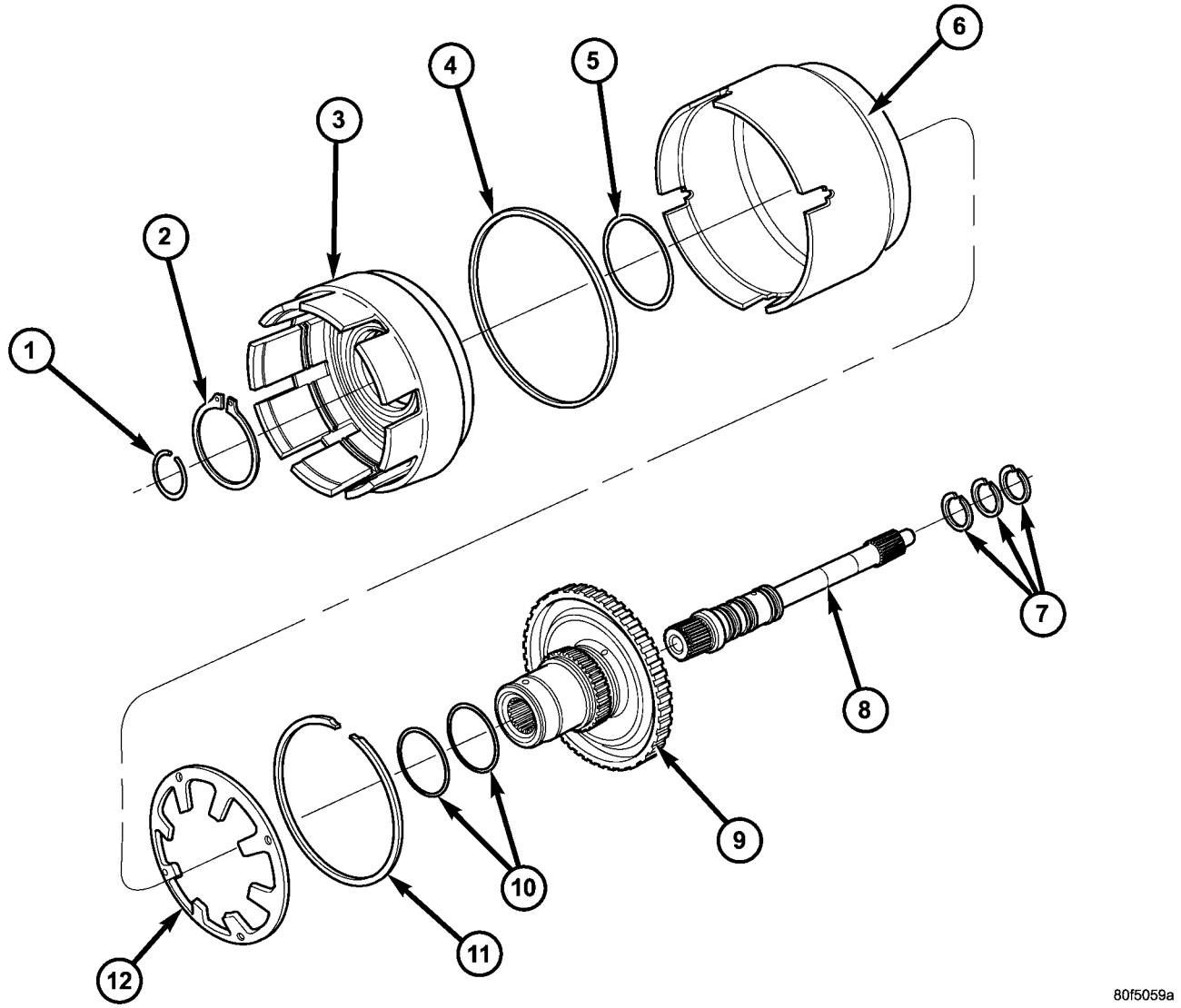

Fig. 244 Input Clutch Hub, Retainer, and OD/Reverse Piston

1 - SNAP RING (INPUT SHAFT)
2 - SNAP RING
3 - CLUTCH RETAINER
4 - SEAL, OUTER
5 - SEAL, INNER
6 - OD/REVERSE PISTON
7 - SEAL, INPUT SHAFT
8 - SHAFT, INPUT
9 - HUB
10 - SEAL
11 - SNAP RING
12 - BELLEVILLE SPRING

INPUT CLUTCH ASSEMBLY (Continued)

(7) Install UD clutch piston (Fig. 245).

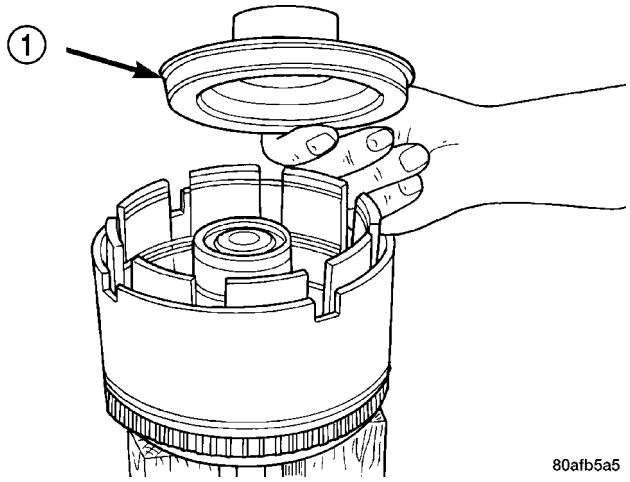

Fig. 245 Underdrive Clutch Piston

1 - PISTON

(8) Install UD piston return spring and Tool 5067 as shown in (Fig. 246).

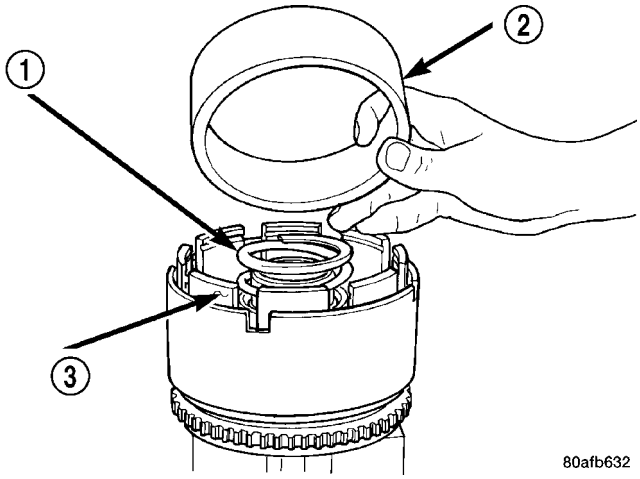

Fig. 246 Seal Compressor Special Tool 5067

1 - PISTON RETURN SPRING
2 - SPECIAL TOOL 5067
3 - INPUT SHAFT CLUTCHES RETAINER ASSEMBLY

(9) Using Tool 5059A and an arbor press, Install the UD spring retainer and snap ring (Fig. 247) (Fig. 248) (Fig. 249) Compress just enough to install snap ring.

CAUTION: Compress return spring just enough to install snap ring.

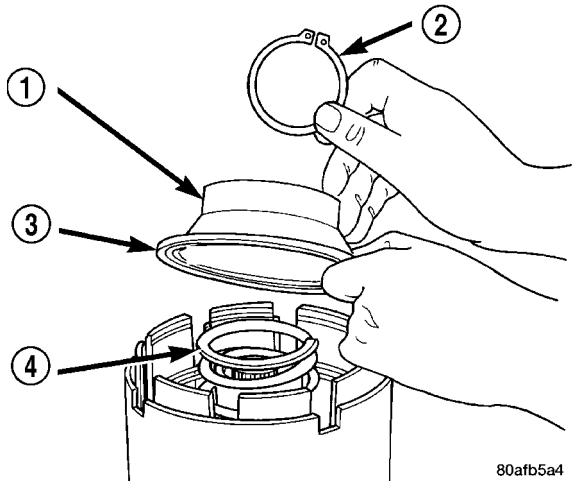

Fig. 247 UD Return Spring and Retainer

1 - UNDERDRIVE SPRING RETAINER
2 - SNAP RING
3 - SEAL
4 - PISTON RETURN SPRING

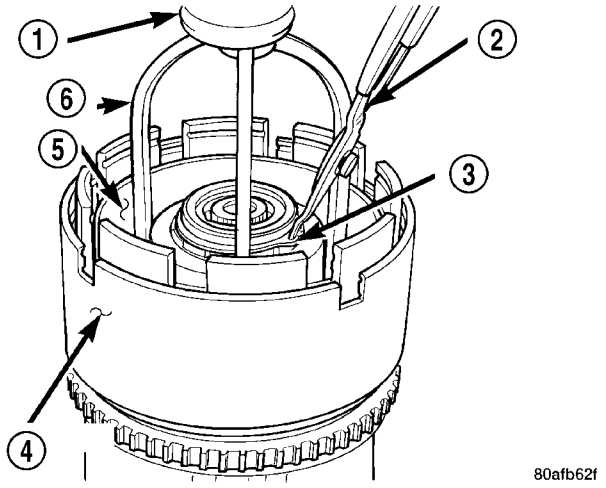

Fig. 248 Install UD Spring Retainer and Snap Ring

1 - ARBOR PRESS RAM
2 - SNAP RING PLIERS
3 - SNAP RING
4 - OD/REVERSE PISTON
5 - TOOL 5067
6 - TOOL 5059A

INPUT CLUTCH ASSEMBLY (Continued)

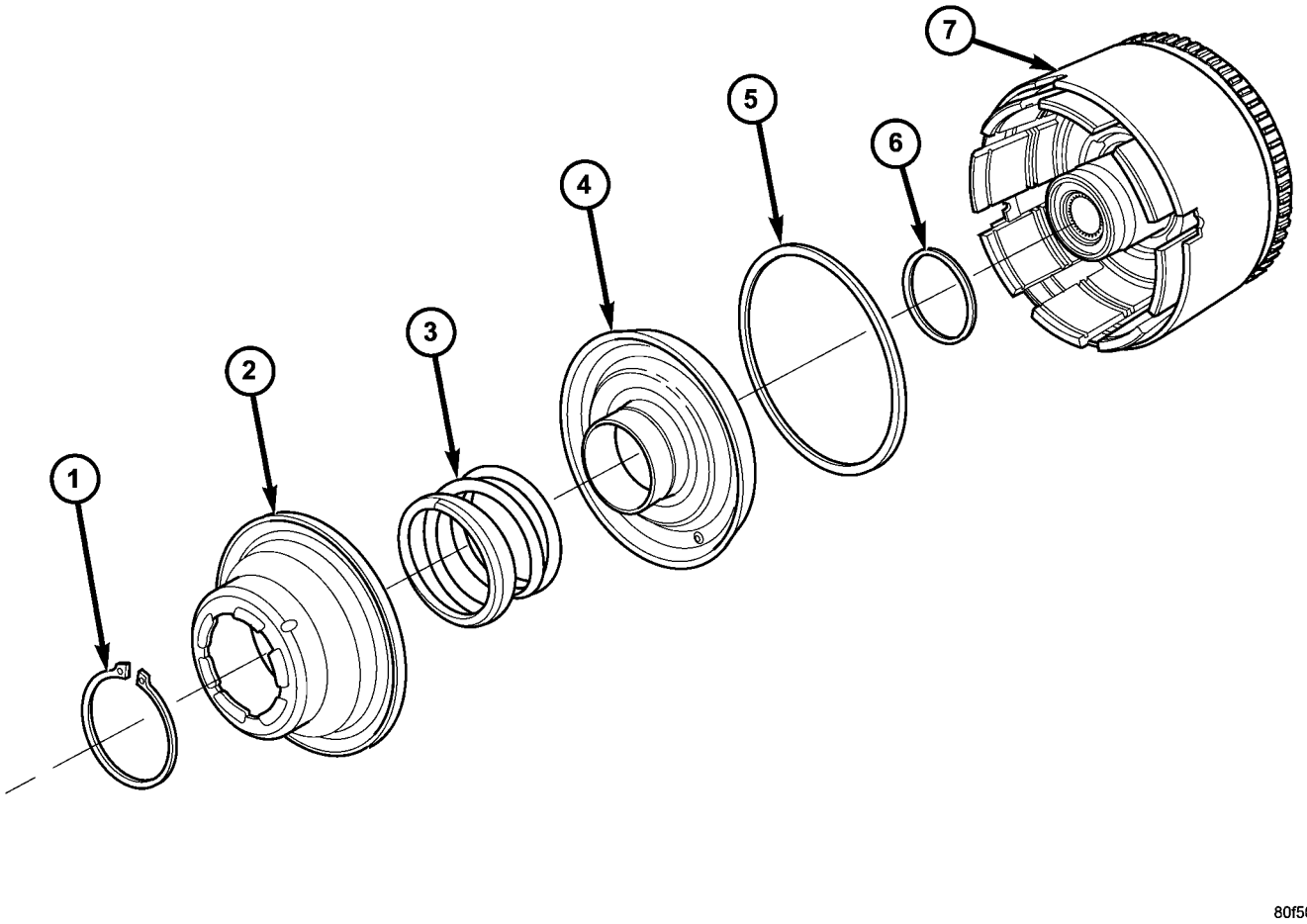

Fig. 249 Underdrive Clutch Piston, Spring and Retainer

1 - SNAP RING
2 - SPRING RETAINER
3 - SPRING
4 - UD CLUTCH PISTON
5 - SEAL, OUTER
6 - SEAL, INNER
7 - INPUT CLUTCH ASSEMBLY

INPUT CLUTCH ASSEMBLY (Continued)

(10) Install the UD clutch pack. Leave out upper disc, until snap ring is installed (Fig. 250).

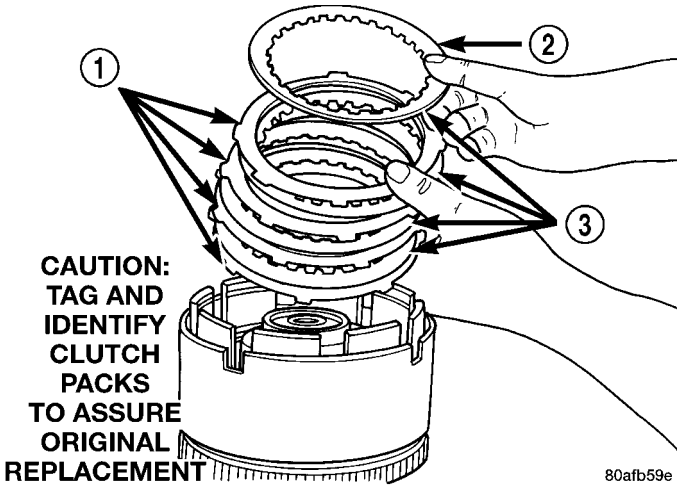

Fig. 250 Underdrive Clutch Pack

1 - CLUTCH PLATE
2 - ONE UD CLUTCH DISC
3 - CLUTCH DISC

(11) Install the UD clutch flat snap ring (Fig. 251).

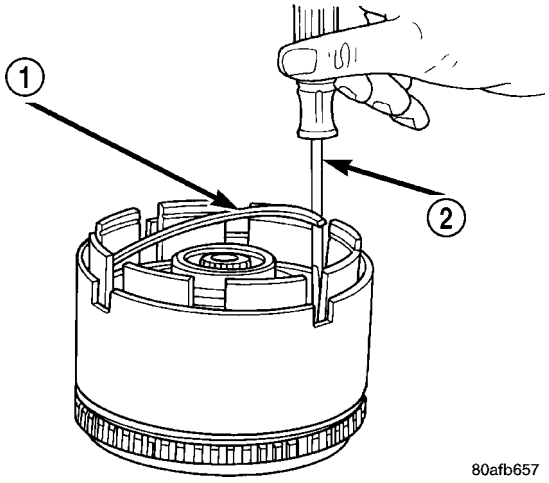

Fig. 251 UD Clutch Flat Snap Ring

1 - UNDERDRIVE CLUTCH REACTION PLATE FLAT SNAP RING
2 - SCREWDRIVER

(12) Install the last UD clutch disc (Fig. 252).

(13) Install the OD/UD clutch reaction plate and snap ring (Fig. 253) (Fig. 254). The OD/UD clutches reaction plate has a step on both sides. Install the OD/UD clutches reaction plate tapered step side up.

NOTE: Snap ring ends must be located within one finger of the input clutch hub. Be sure that snap ring is fully seated, by pushing with screwdriver, into snap ring groove all the way around.

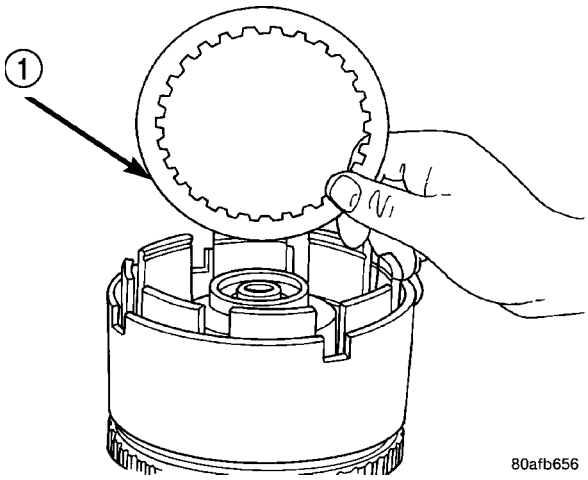

Fig. 252 Install Last UD Clutch Disc

1 - ONE UNDERDRIVE CLUTCH DISC

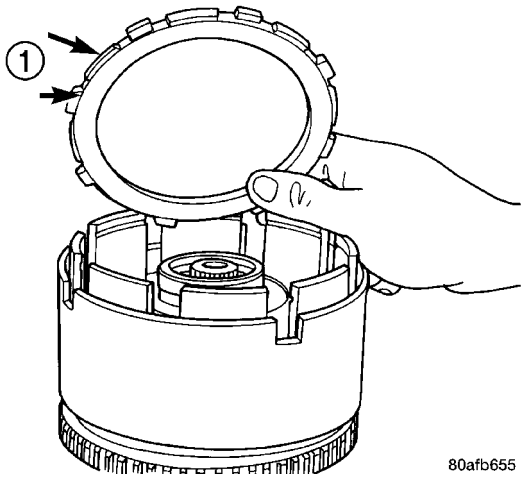

Fig. 253 OD/UD Reaction Plate

1 - OD/UD CLUTCH REACTION PLATE (TAPERED STEP SIDE UP)

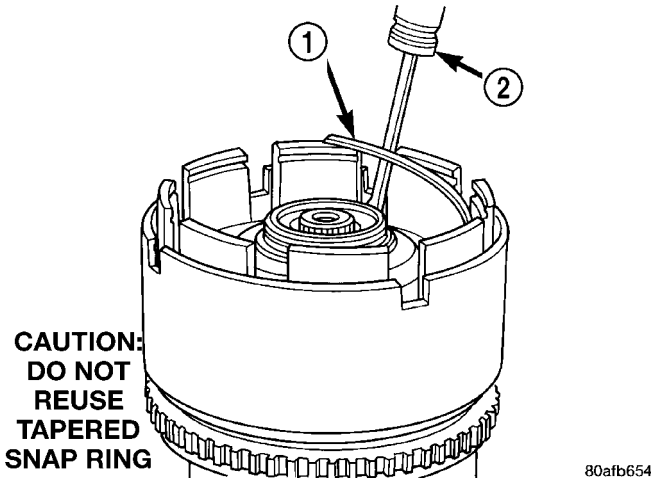

Fig. 254 Tapered Snap Ring

1 - OVERDRIVE/UNDERDRIVE CLUTCHES REACTION PLATE TAPERED SNAP RING
2 - SCREWDRIVER (DO NOT SCRATCH REACTION PLATE)

INPUT CLUTCH ASSEMBLY (Continued)

(14) Seat tapered snap ring to ensure proper installation (Fig. 255) (Fig. 256).

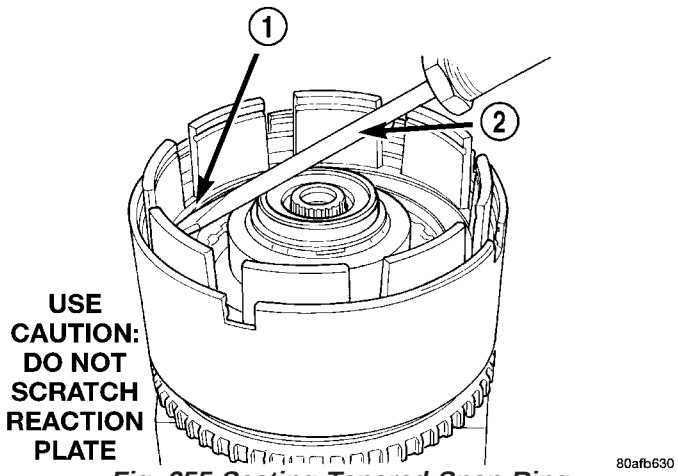

Fig. 255 Seating Tapered Snap Ring

1 - OVERDRIVE/UNDERDRIVE CLUTCHES REACTION PLATE TAPERED SNAP RING
2 - SCREWDRIVER

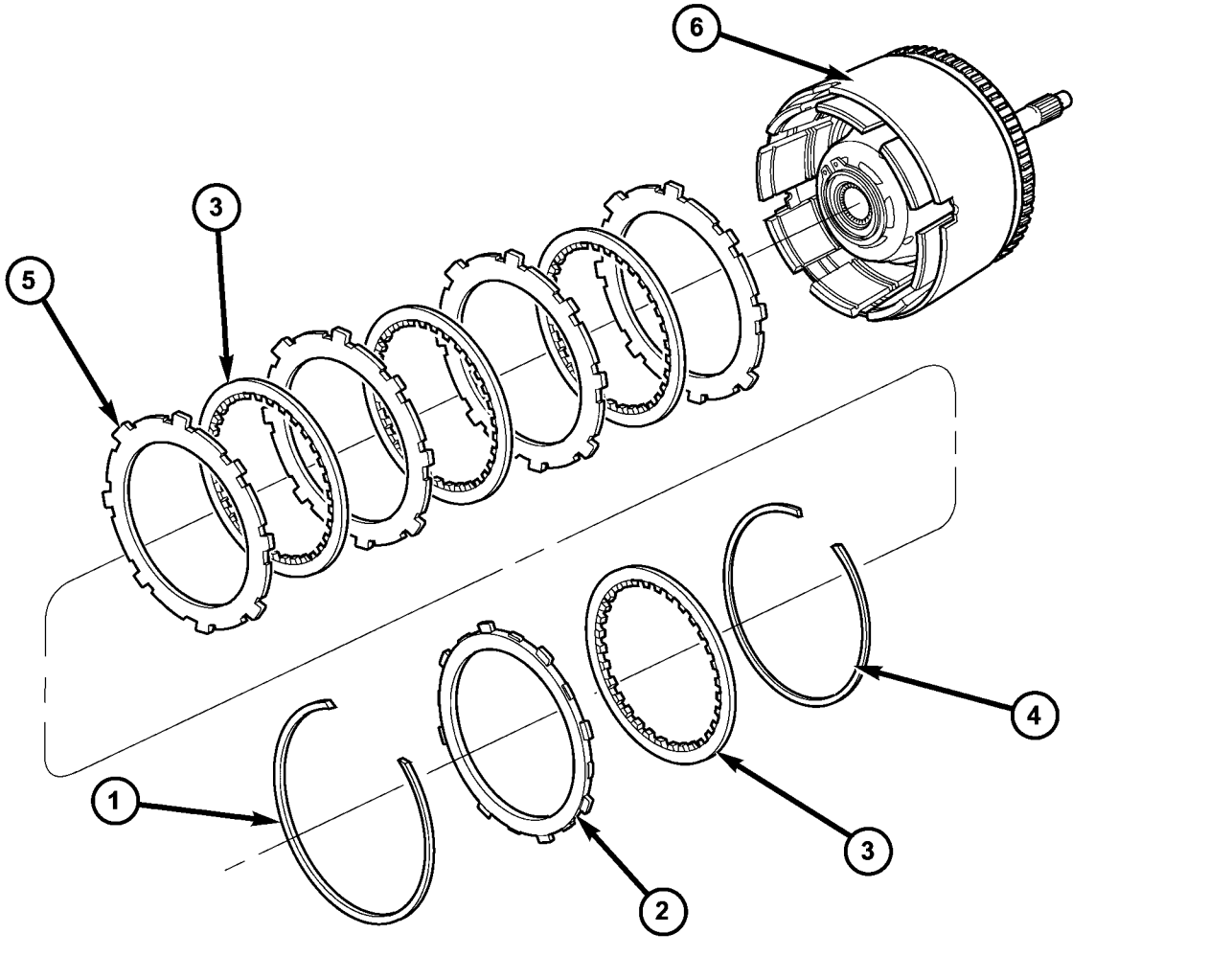

Fig. 256 Underdrive Clutch Assembly

1 - SNAP RING (TAPERED)
2 - OD/UD REACTION PLATE
3 - CLUTCH DISC
4 - SNAP RING (FLAT)
5 - CLUTCH PLATE
6 - INPUT CLUTCH ASSEMBLY

INPUT CLUTCH ASSEMBLY (Continued)

(15) Install input clutch assembly to the Input Clutch Pressure Fixture–Tool 8391 (Fig. 257).

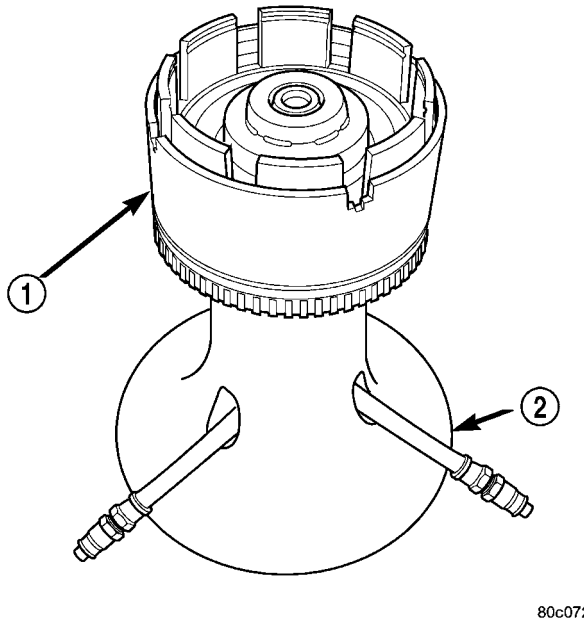

Fig. 257 Input Clutch Assembly on Pressure Fixture Tool 8391

1 - INPUT CLUTCH ASSEMBLY
2 - INPUT CLUTCH PRESSURE FIXTURE 8391

(16) Set up dial indicator on the UD clutch pack as shown in (Fig. 258).

(17) Using moderate pressure, press down and hold (near indicator) the UD clutch pack with screwdriver or suitable tool and zero dial indicator (Fig. 259). When releasing pressure on clutch pack, indicator reading should advance 0.005–0.010.

CAUTION: Do not apply more than 30 psi (206 kPa) to the underdrive clutch pack.

(18) Apply 30 psi (206 kPa) to the underdrive hose on Tool 8391 and measure UD clutch clearance. Measure and record UD clutch pack measurement in four (4) places, 90° apart.

(19) Take average of four measurements and compare with UD clutch pack clearance specification. **Underdrive clutch pack clearance must be 0.94-1.50 mm (0.037-0.059 in.).**

(20) If necessary, select the proper reaction plate to achieve specifications:

UNDERDRIVE REACTION PLATE THICKNESS	
4659939AB	5.837-5.937 mm (0.230-0.234 in.)
4659940AB	6.147-6.248 mm (0.242-0.246 in.)
4659941AB	6.457-6.557 mm (0.254-0.258 in.)

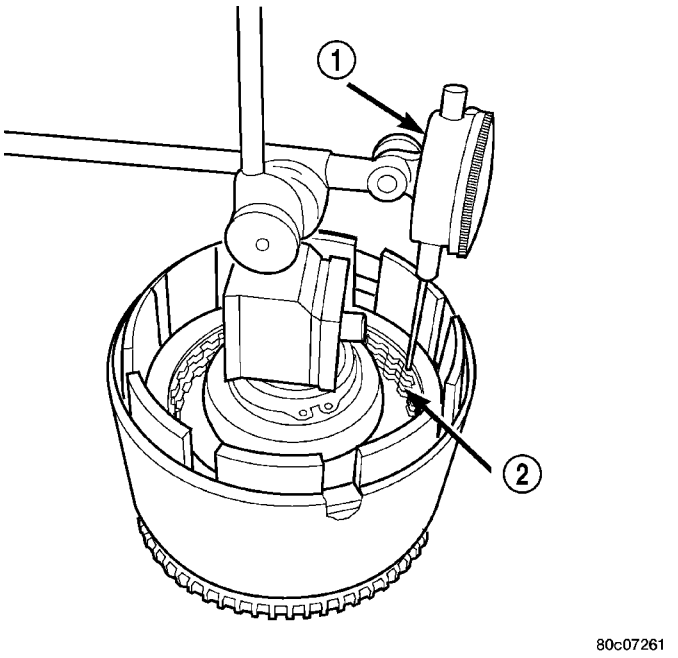

Fig. 258 Set Up Dial Indicator to Measure UD Clutch Clearance

1 - DIAL INDICATOR
2 - UNDERDRIVE CLUTCH

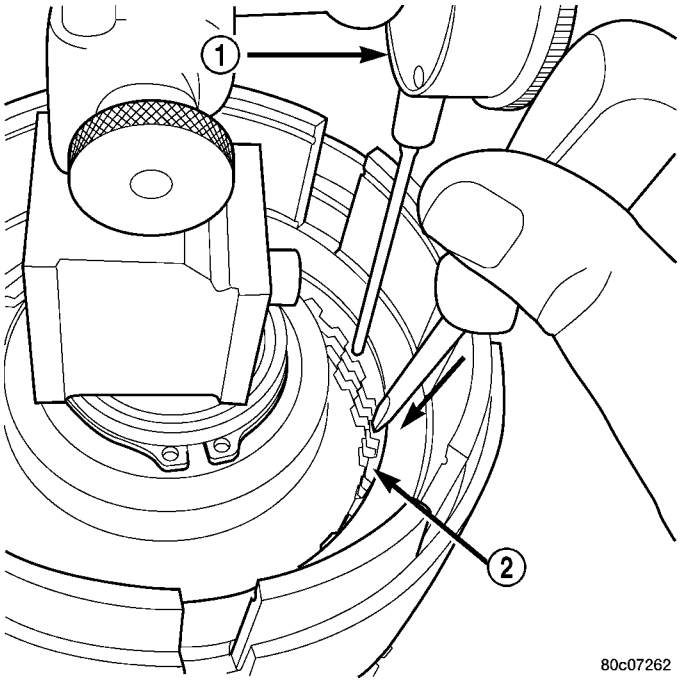

Fig. 259 Press Down on UD Clutch Pack and Zero Dial Indicator

1 - DIAL INDICATOR
2 - UNDERDRIVE CLUTCH

INPUT CLUTCH ASSEMBLY (Continued)

(21) Install the OD clutch pack (four frictions/three steels) (Fig. 260).

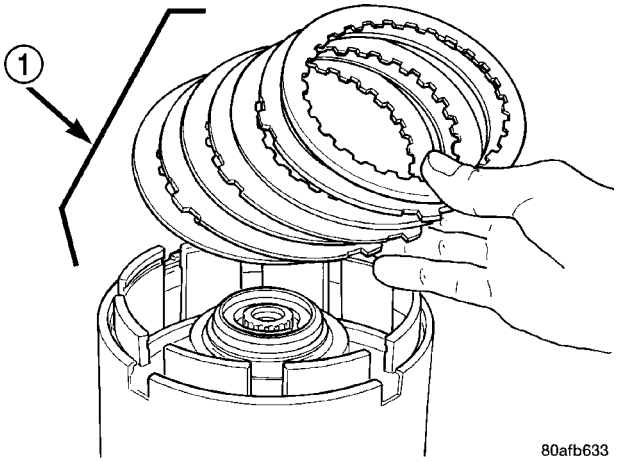

Fig. 260 Install OD Clutch Pack

1 - OVERDRIVE CLUTCH PACK

(22) Install OD pressure plate waved snap ring (Fig. 261).

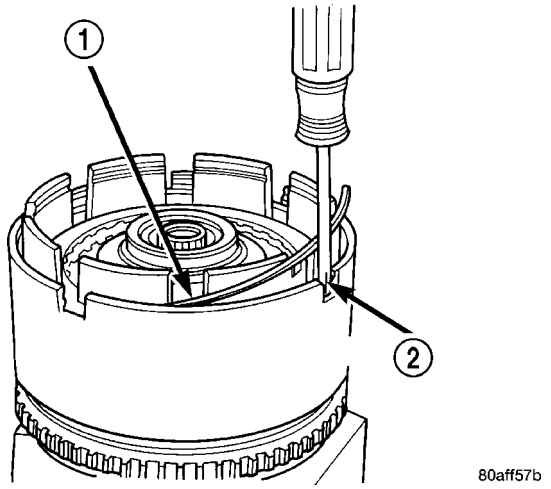

Fig. 261 Install Waved Snap Ring

1 - OVERDRIVE PRESSURE PLATE WAVED SNAP RING
2 - SCREWDRIVER

(23) Install the OD/Reverse pressure plate with large step down (towards OD clutch pack) (Fig. 262).

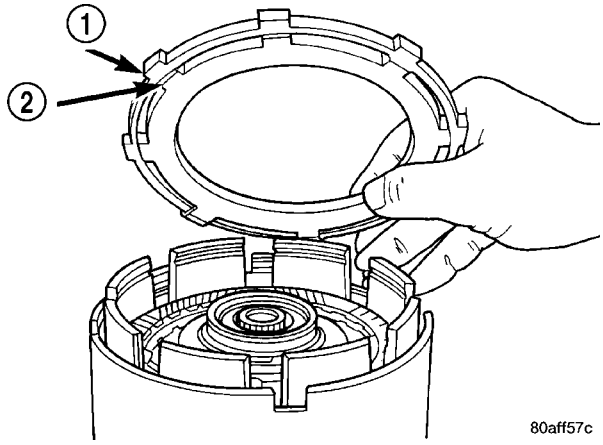

Fig. 262 OD/Reverse Pressure Plate

1 - OVERDRIVE/REVERSE PRESSURE PLATE
2 - (STEP SIDE DOWN)

(24) Install OD pressure plate flat snap ring (Fig. 263) (Fig. 264).

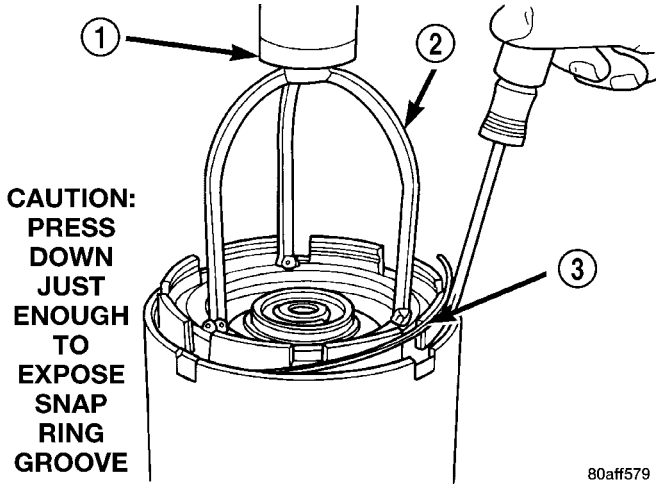

Fig. 263 Install Flat Snap Ring

1 - ARBOR PRESS RAM
2 - TOOL 5059A
3 - FLAT SNAP RING

INPUT CLUTCH ASSEMBLY (Continued)

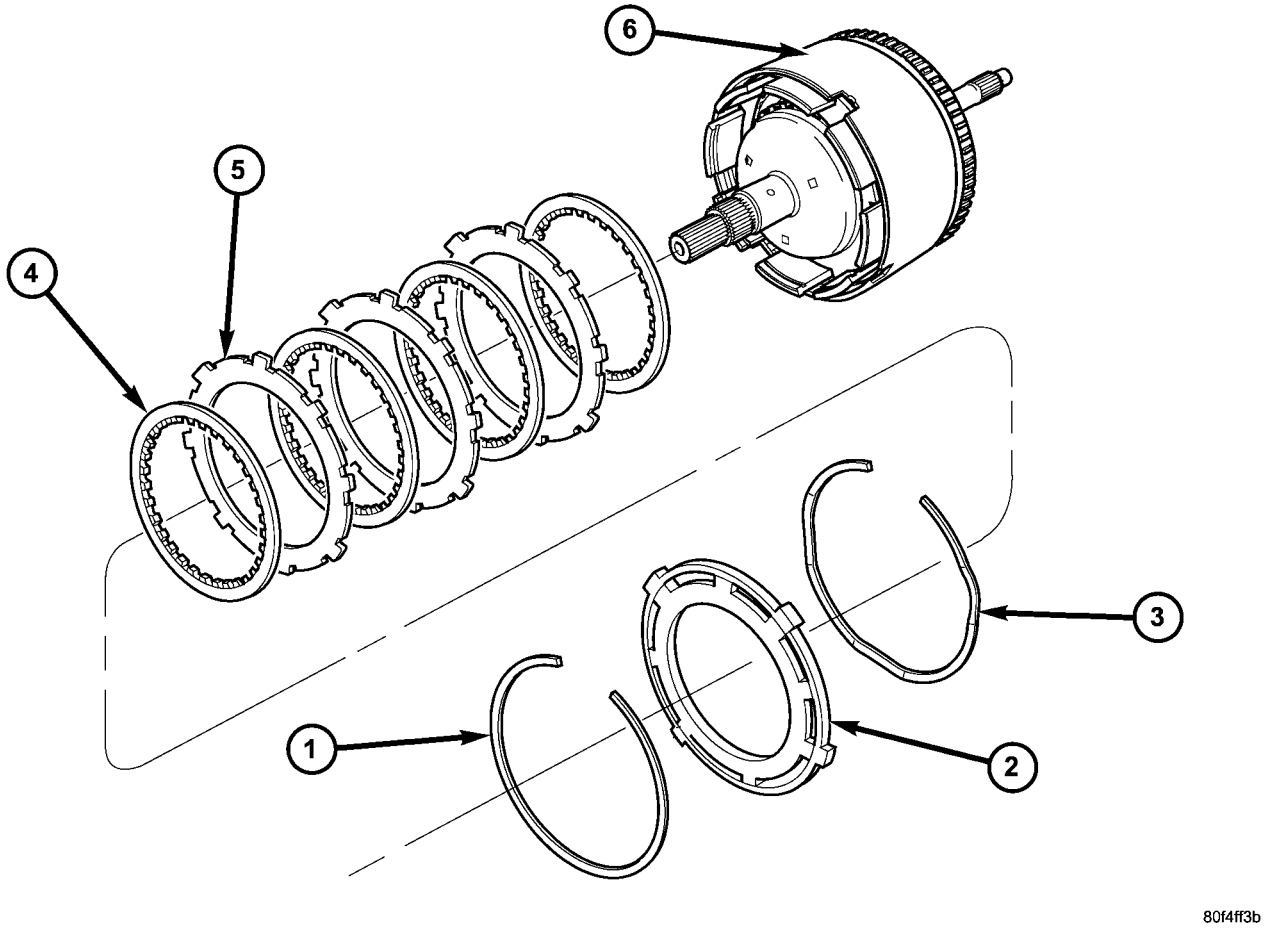

Fig. 264 Overdrive Clutch Assembly

1 - SNAP RING
2 - OD/REVERSE PRESSURE PLATE
3 - SNAP RING (WAVE)
4 - CLUTCH DISC (4)
5 - CLUTCH STEEL (3)
6 - INPUT CLUTCH ASSEMBLY

INPUT CLUTCH ASSEMBLY (Continued)

(25) Measure OD clutch pack clearance. Set up dial indicator on top of the OD/Reverse pressure plate as shown in (Fig. 265).

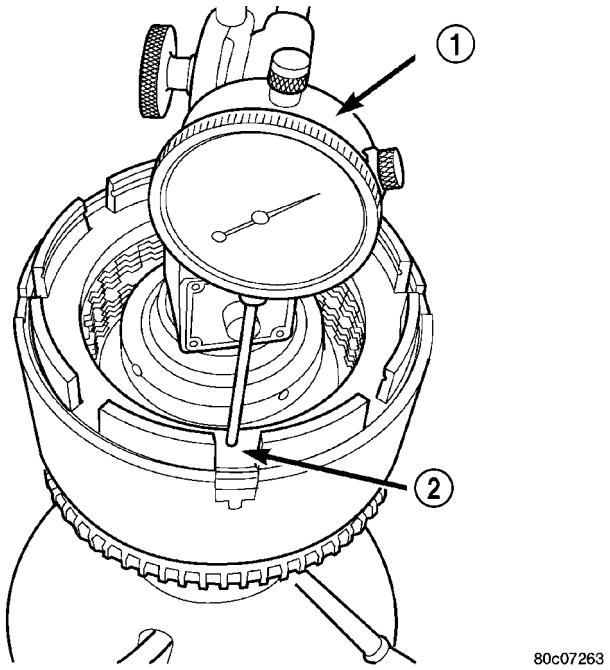

Fig. 265 Measure OD Clutch Pack Clearance

1 - DIAL INDICATOR
2 - OD/REVERSE REACTION PLATE

(26) Zero dial indicator and apply 30 psi (206 kPa) air pressure to the overdrive clutch hose on Tool 8391. Measure and record OD clutch pack measurement in four (4) places, 90° apart.

(27) Take average of four measurements and compare with OD clutch pack clearance specification. **The overdrive (OD) clutch pack clearance is 1.07-3.25 mm (0.042-0.128 in.).**

If not within specifications, the clutch is not assembled properly. There is no adjustment for the OD clutch clearance.

(28) Install reverse clutch pack (two frictions/one steel) (Fig. 266).

(29) Install reverse clutch reaction plate with the flat side down towards reverse clutch (Fig. 267).

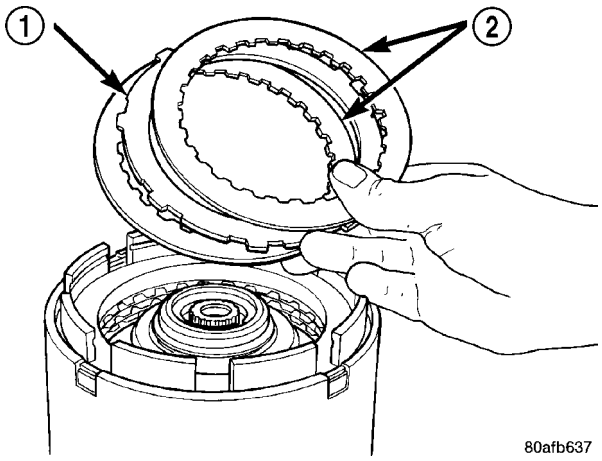

Fig. 266 Install Reverse Clutch Pack

1 - REVERSE CLUTCH PLATE
2 - REVERSE CLUTCH DISCS

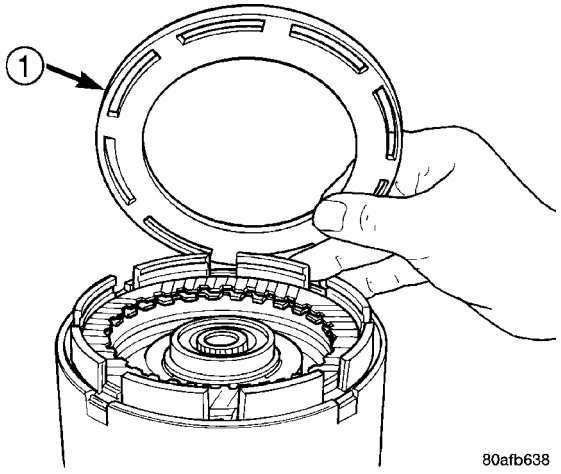

Fig. 267 Install Reaction Plate

1 - REVERSE CLUTCH REACTION PLATE (FLAT SIDE DOWN)

INPUT CLUTCH ASSEMBLY (Continued)

(30) Tap reaction plate down to allow installation of the reverse clutch snap ring. Install reverse clutch snap ring (Fig. 268) (Fig. 269).

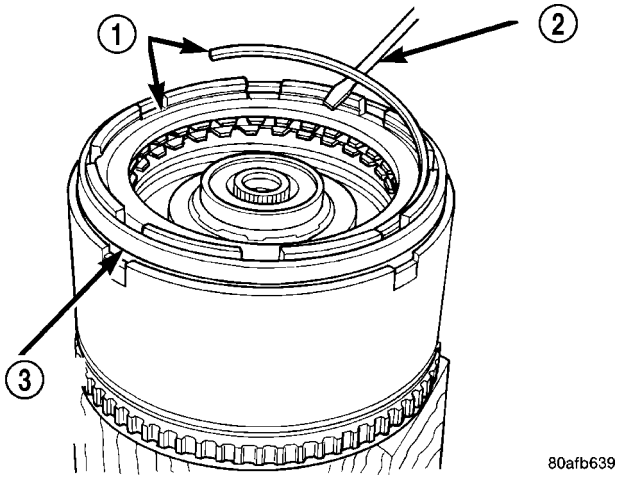

Fig. 268 Install Reverse Clutch Snap Ring

1 - REVERSE CLUTCH SNAP RING (SELECT)
2 - SCREWDRIVER
3 - REVERSE CLUTCH REACTION PLATE

(31) Pry up reverse reaction plate to seat against snap ring (Fig. 270).

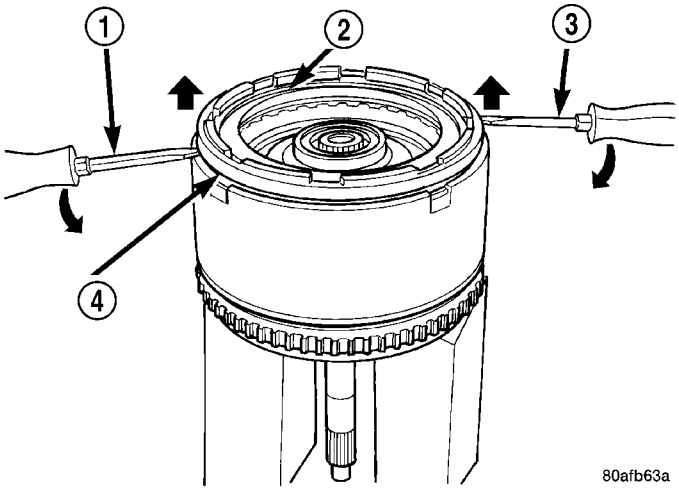

Fig. 270 Pry Up Reaction Plate to Seat Against Snap Ring

1 - SCREWDRIVER
2 - SNAP RING
3 - SCREWDRIVER
4 - MUST RAISE REVERSE REACTION PLATE TO RAISE SNAP RING

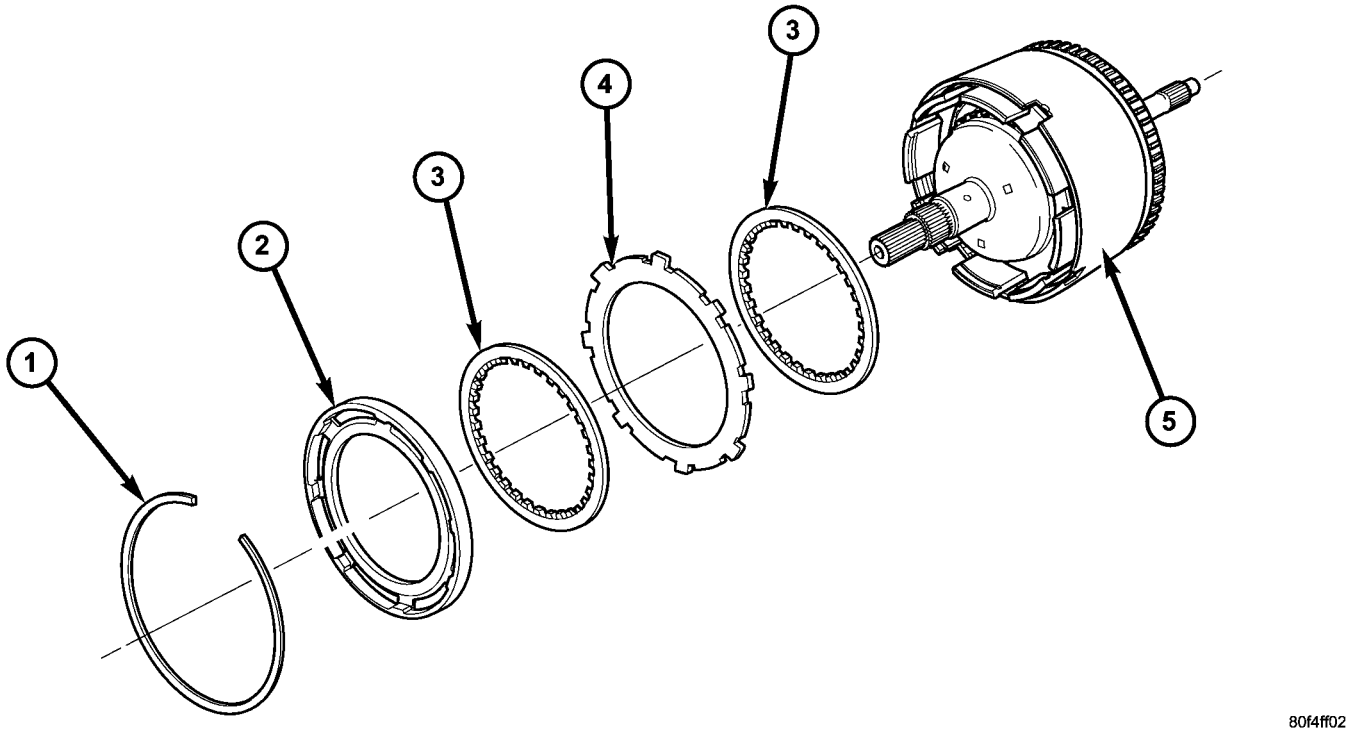

Fig. 269 Reverse Clutch Assembly

1 - SNAP RING
2 - REACTION PLATE
3 - CLUTCH DISC (2)
4 - CLUTCH PLATE (1)
5 - INPUT CLUTCH ASSEMBLY

INPUT CLUTCH ASSEMBLY (Continued)

(32) Set up a dial indicator on the reverse clutch pack as shown in (Fig. 271).

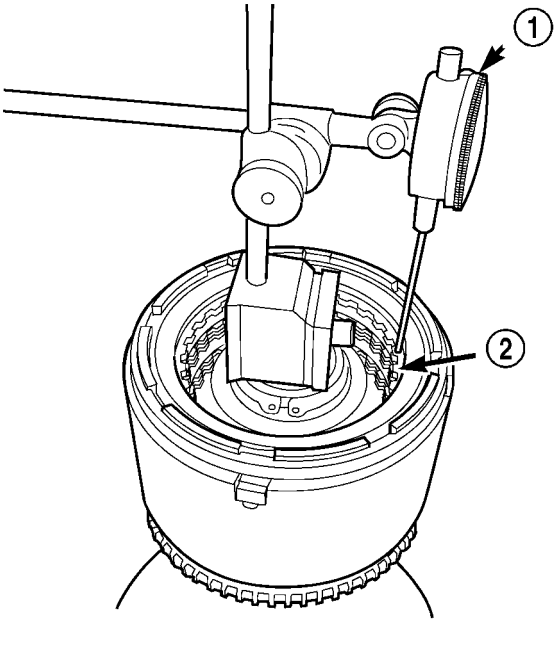

Fig. 271 Measure Reverse Clutch Pack Clearance

1 - DIAL INDICATOR
2 - REVERSE CLUTCH

(33) Using moderate pressure, press down and hold (near indicator) reverse clutch disc with screwdriver or suitable tool and zero dial indicator (Fig. 272). When releasing pressure, indicator should advance 0.005-0.010. as clutch pack relaxes.

(34) Apply 30 psi (206 kPa) air pressure to the reverse clutch hose on Tool 8391. Measure and record reverse clutch pack measurement in four (4) places, 90° apart.

(35) Take average of four measurements and compare with reverse clutch pack clearance specification. **The reverse clutch pack clearance is 0.89-1.37 mm (0.035-0.054 in.).** Select the proper reverse clutch snap ring to achieve specifications:

REVERSE CLUTCH SNAP RING THICKNESS	
4377195	1.53-1.58 mm (0.060-0.062 in.)
4412871	1.77-1.83 mm (0.070-0.072 in.)
4412872	2.02-2.07 mm (0.080-0.082 in.)
4412873	2.27-2.32 mm (0.090-0.091 in.)

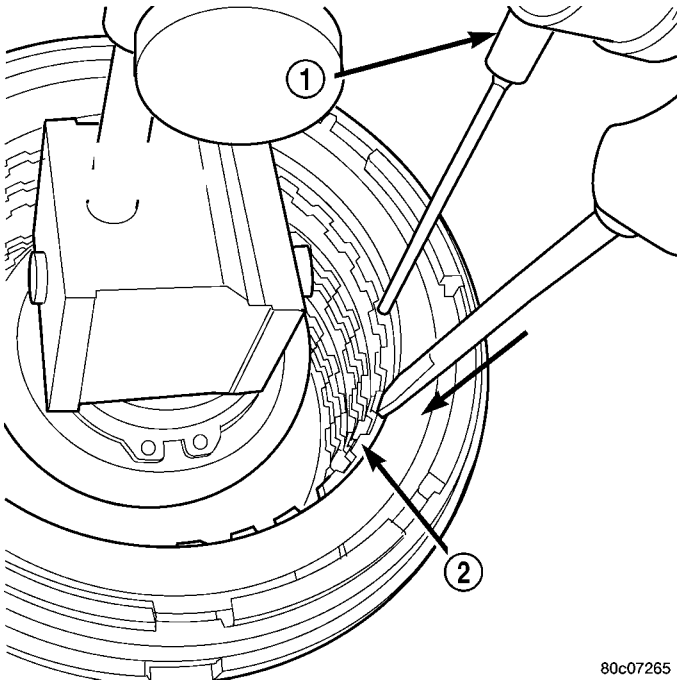

Fig. 272 Press Down on Reverse Clutch and Zero Indicator

1 - DIAL INDICATOR
2 - REVERSE CLUTCH

(36) To complete the assembly, reverse clutch and overdrive clutch must be removed.

(37) Install the #2 needle bearing (Fig. 273).

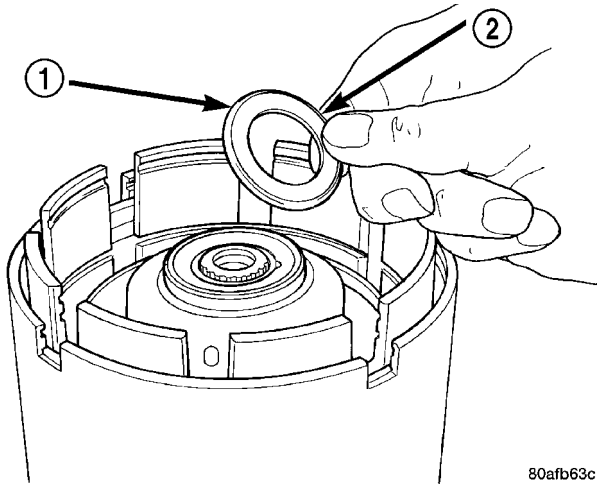

Fig. 273 Install No. 2 Needle Bearing

1 - #2 NEEDLE BEARING (NOTE 3 SMALL TABS)
2 - TABS UP

INPUT CLUTCH ASSEMBLY (Continued)

(38) Install the underdrive shaft assembly (Fig. 274).

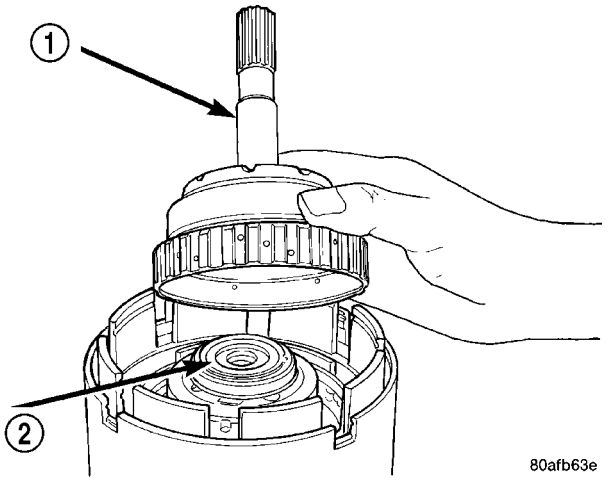

Fig. 274 Install Underdrive Shaft Assembly

1 - UNDERDRIVE SHAFT ASSEMBLY
2 - #2 NEEDLE BEARING

(39) Install the #3 thrust washer to the underdrive shaft assembly. Be sure five tabs are seated properly (Fig. 275).

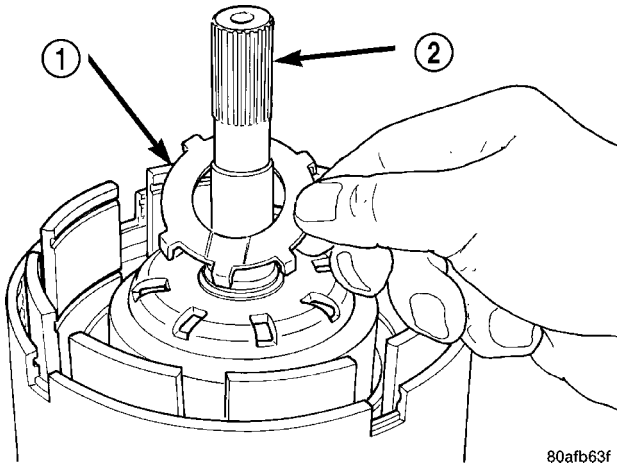

Fig. 275 Install No. 3 Thrust Washer

1 - #3 THRUST WASHER (NOTE 5 TABS)
2 - UNDERDRIVE SHAFT ASSEMBLY

(40) Install the #3 thrust plate to the bottom of the overdrive shaft assembly. Retain with petrolatum or transmission assembly gel (Fig. 276).

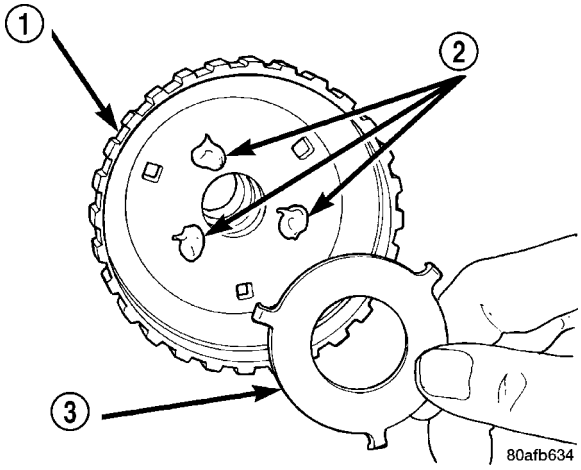

Fig. 276 Install No. 3 Thrust Plate

1 - OVERDRIVE SHAFT ASSEMBLY
2 - DABS OF PETROLATUM (FOR RETENTION)
3 - #3 THRUST PLATE (NOTE 3 TABS)

(41) Install the overdrive shaft assembly (Fig. 277) (Fig. 278).

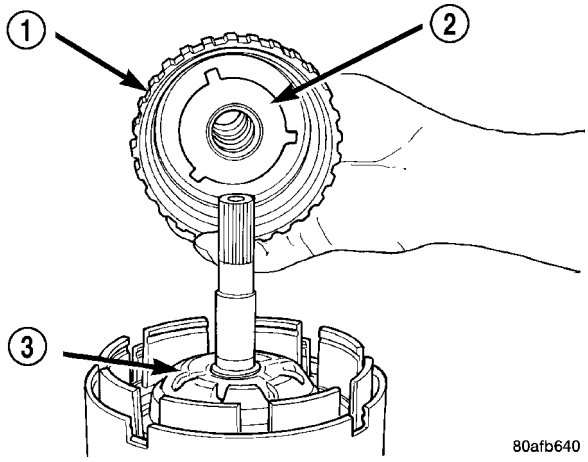

Fig. 277 Install Overdrive Shaft Assembly

1 - OVERDRIVE SHAFT ASSEMBLY
2 - #3 THRUST PLATE
3 - #3 THRUST WASHER

(42) Reinstall overdrive and reverse clutch as shown. **Rechecking these clutch clearances is not necessary.**

INPUT CLUTCH ASSEMBLY (Continued)

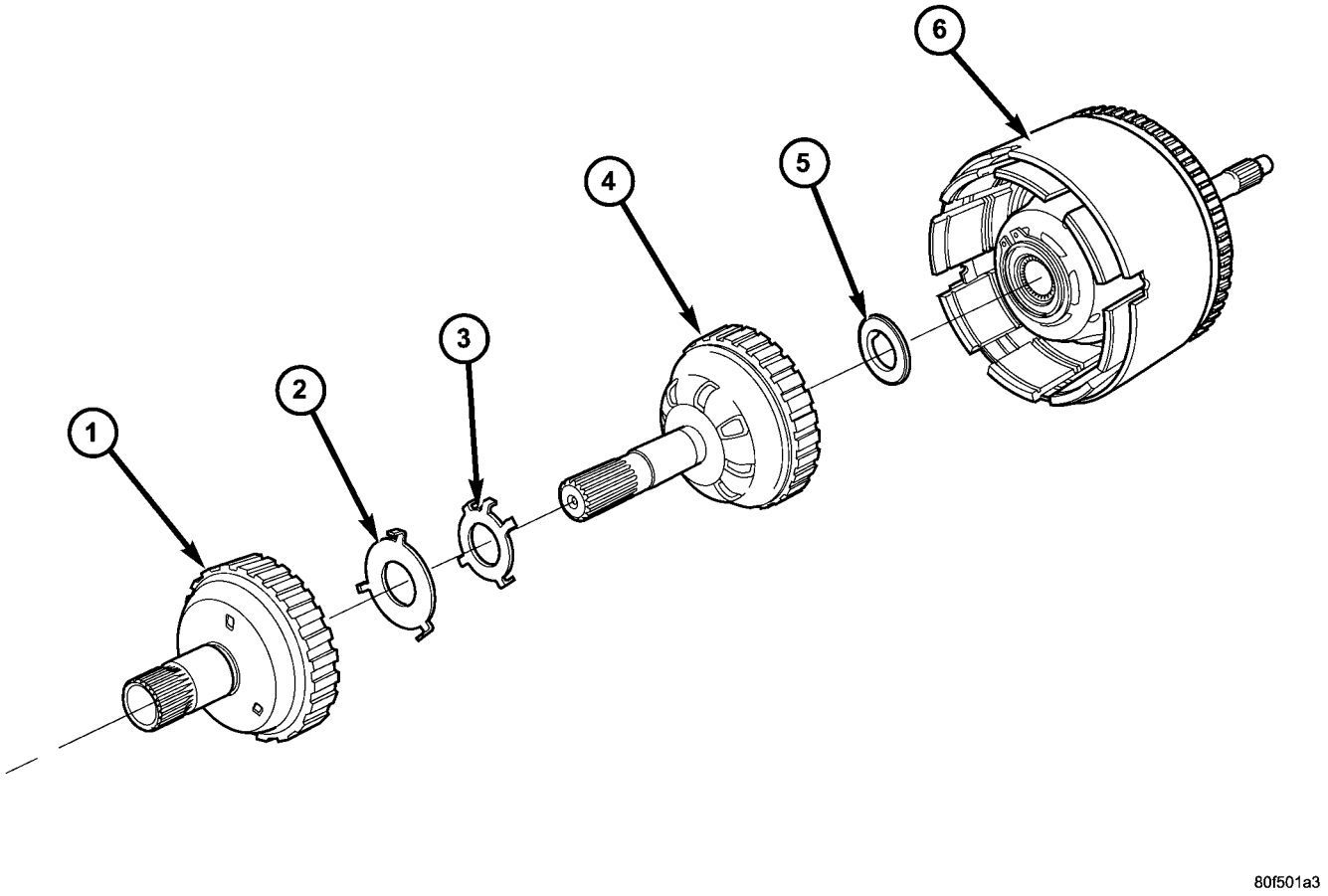

Fig. 278 Overdrive/Underdrive Shafts

1 - OVERDRIVE SHAFT
2 - #3 THRUST PLATE (3 TABS)
3 - #3 THRUST WASHER (5 TABS)
4 - UNDERDRIVE SHAFT
5 - #2 NEEDLE BEARING (3 TABS)
6 - INPUT CLUTCH ASSEMBLY

OIL PUMP

DESCRIPTION

The oil pump is located in the pump housing inside the bell housing of the transaxle case (Fig. 279). The oil pump consists of an inner and outer gear, a housing, and a cover that also serves as the reaction shaft support.

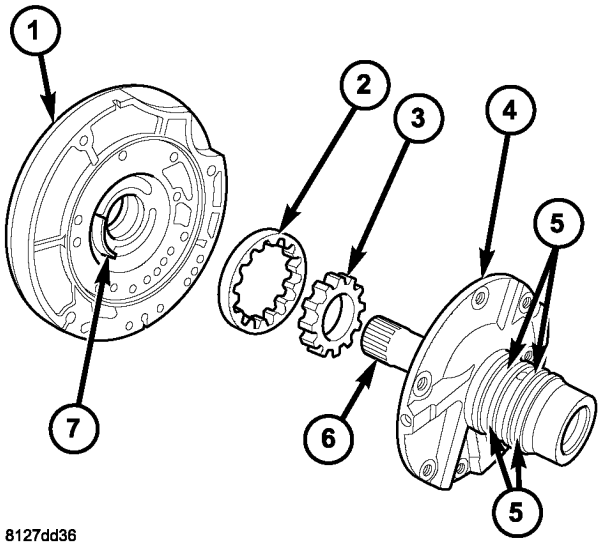

Fig. 279 Oil Pump Assembly

1 - PUMP BODY
2 - OUTER GEAR
3 - INNER GEAR
4 - REACTION SHAFT SUPPORT
5 - SEAL RINGS (4)
6 - REACTION SHAFT
7 - CRESCENT

OPERATION

As the torque converter rotates, the converter hub rotates the inner and outer gears. As the gears rotate, the clearance between the gear teeth increases in the crescent area, and creates a suction at the inlet side of the pump. This suction draws fluid through the pump inlet from the oil pan. As the clearance between the gear teeth in the crescent area decreases, it forces pressurized fluid into the pump outlet and to the valve body.

DISASSEMBLY

When disassembling the transaxle it is necessary to inspect the oil pump for wear and damage.

(1) Remove the reaction shaft support-to-pump body bolts (Fig. 280).

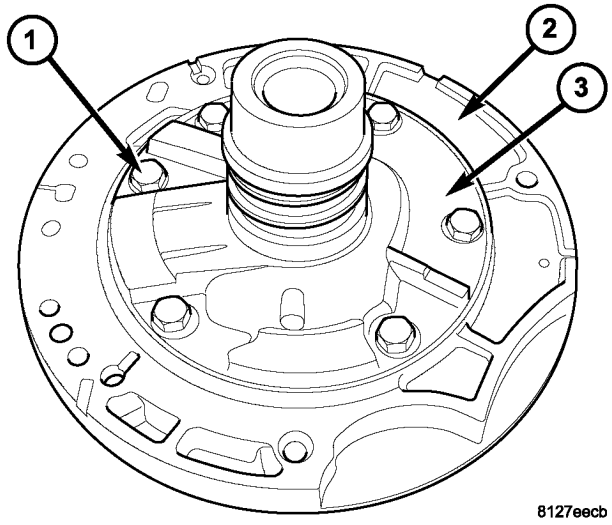

Fig. 280 Reaction Support-to-Pump Body Bolts

1 - BOLT (6)
2 - PUMP BODY
3 - REACTION SHAFT SUPPORT

(2) Remove reaction shaft support from pump housing (Fig. 281).

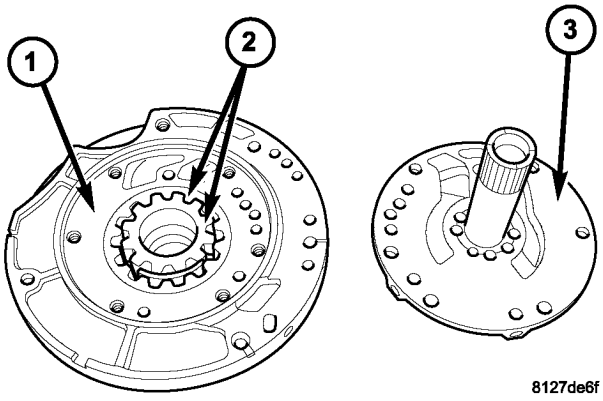

Fig. 281 Reaction Shaft Support

1 - PUMP BODY
2 - PUMP GEARS
3 - REACTION SHAFT SUPPORT

OIL PUMP (Continued)

(3) Remove the pump gears (Fig. 282) and check for wear and damage on pump housing and gears.

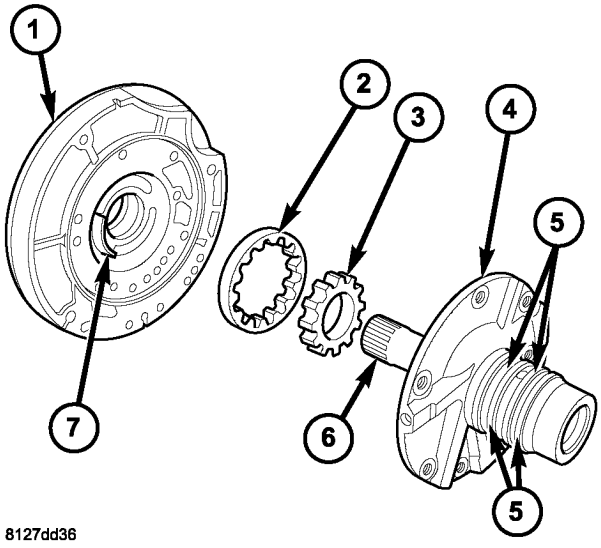

Fig. 282 Oil Pump Assembly

1 - PUMP BODY
2 - OUTER GEAR
3 - INNER GEAR
4 - REACTION SHAFT SUPPORT
5 - SEAL RINGS (4)
6 - REACTION SHAFT
7 - CRESCENT

(4) Re-install the gears and check clearances.

(5) Measure the clearance between the outer gear and the pump pocket (Fig. 283). Clearance should be 0.089–0.202 mm (0.0035-0.0079 in.).

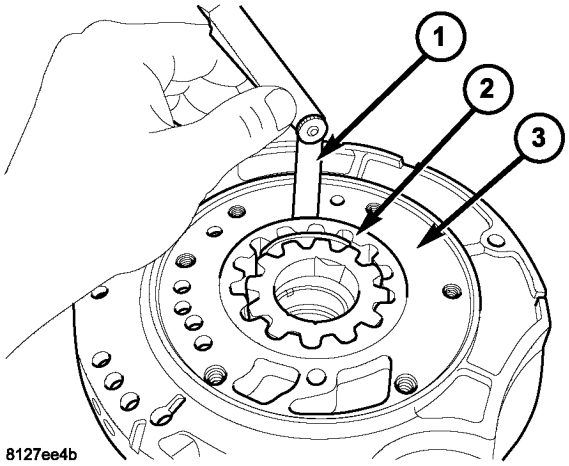

Fig. 283 Measuring Outer Gear-to-Pocket

1 - FEELER GAUGE
2 - OUTER GEAR
3 - PUMP BODY

(6) Measure clearance between outer gear and crescent (Fig. 284). Clearance should be 0.060-0.298 mm (0.0023-0.0117 in.).

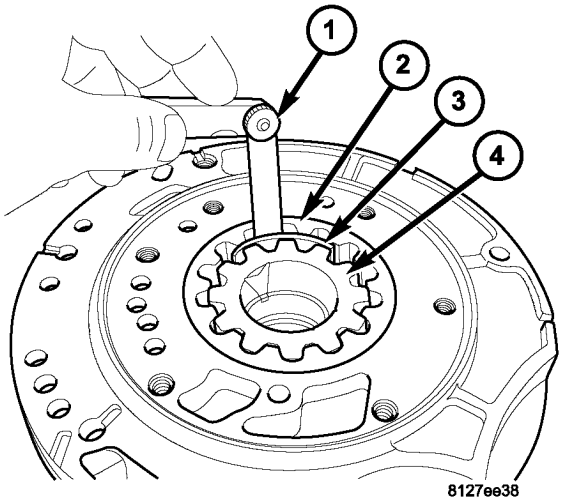

Fig. 284 Measuring Outer Gear-to-Crescent

1 - FEELER GAUGE
2 - OUTER GEAR
3 - CRESCENT
4 - INNER GEAR

(7) Measure clearance between inner gear and crescent (Fig. 285). Clearance should be 0.093-0.385 mm (0.0036-0.0151 in.).

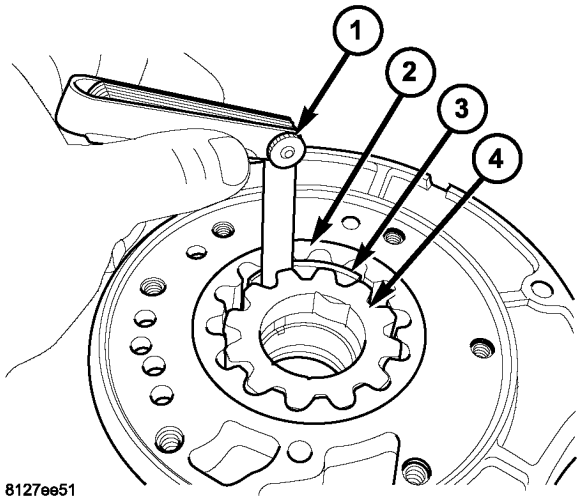

Fig. 285 Measuring Inner Gear-to-Crescent

1 - FEELER GAUGE
2 - OUTER GEAR
3 - CRESCENT
4 - INNER GEAR

OIL PUMP (Continued)

(8) Position an appropriate piece of Plastigage across both pump gears.

(9) Align the Plastigage to a flat area on the reaction shaft support housing.

(10) Install the reaction shaft to the pump housing (Fig. 280). Tighten the bolts to 27 N·m (20 ft. lbs.).

(11) Remove bolts and carefully separate the housings. Measure the Plastigage following the instructions supplied.

(12) Clearance between both gear end faces and the reaction shaft support should be 0.020-0.046 mm (0.0008-0.0018 in.).

ASSEMBLY

(1) Assemble oil pump as shown in (Fig. 286).

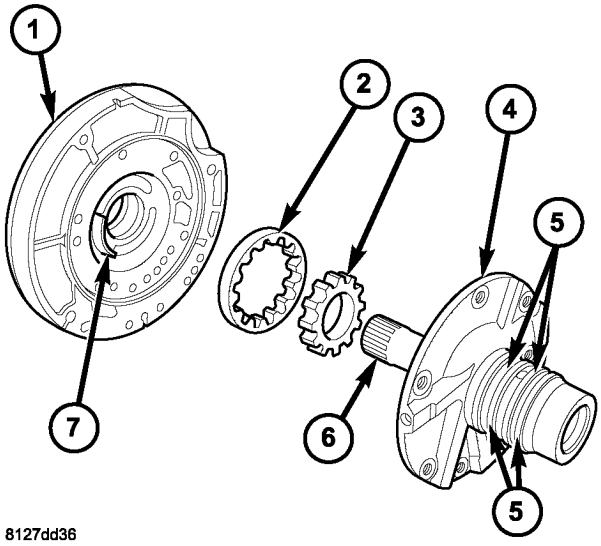

Fig. 286 Oil Pump Assembly

1 - PUMP BODY
2 - OUTER GEAR
3 - INNER GEAR
4 - REACTION SHAFT SUPPORT
5 - SEAL RINGS (4)
6 - REACTION SHAFT
7 - CRESCENT

(2) Install and torque reaction shaft support-to-oil pump housing bolts to 28 N·m (20 ft. lbs.) torque (Fig. 287).

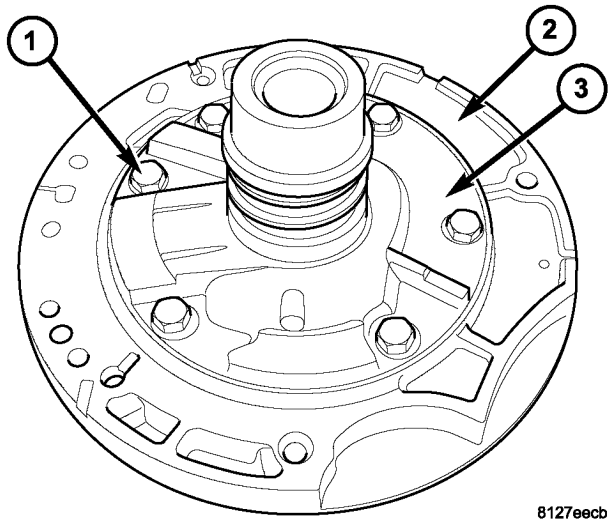

Fig. 287 Reaction Support-to-Pump Body Bolts

1 - BOLT (6)
2 - PUMP BODY
3 - REACTION SHAFT SUPPORT

PLANETARY GEARTRAIN

DESCRIPTION

The planetary geartrain is located between the input clutch assembly and the rear of the transaxle case. The planetary geartrain consists of two sun gears, two planetary carriers, two annulus (ring) gears, and one output shaft (Fig. 288).

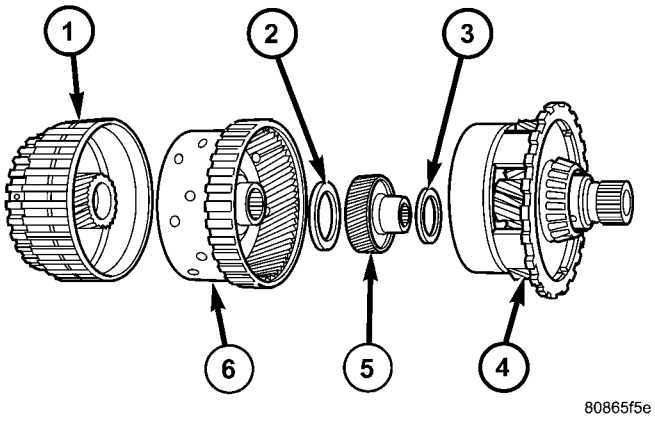

Fig. 288 Planetary Geartrain

1 - FRONT SUN GEAR ASSEMBLY
2 - #6 THRUST BEARING
3 - #7 THRUST BEARING
4 - REAR CARRIER/FRONT ANNULUS ASSEMBLY
5 - REAR SUN GEAR
6 - FRONT CARRIER/REAR ANNULUS ASSEMBLY

OPERATION

The planetary geartrain utilizes two planetary gear sets that connect the transmission input shaft to the output shaft. Input and holding clutches drive or lock different planetary members to change output ratio or direction.

SEAL - OIL PUMP

REMOVAL

(1) Remove transaxle from vehicle (Refer to 21 - TRANSMISSION/TRANSAXLE/AUTOMATIC - 41TE - REMOVAL).

(2) Using Tool C-3981-B, remove oil pump seal (Fig. 289).

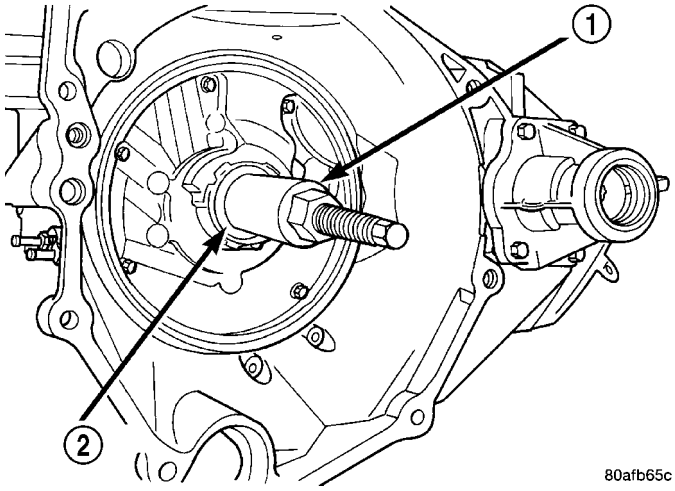

Fig. 289 Remove Oil Pump Seal

1 - TOOL C-3981–B
2 - OIL PUMP SEAL

INSTALLATION

(1) Using Tool C-4193, install oil pump seal (Fig. 290).

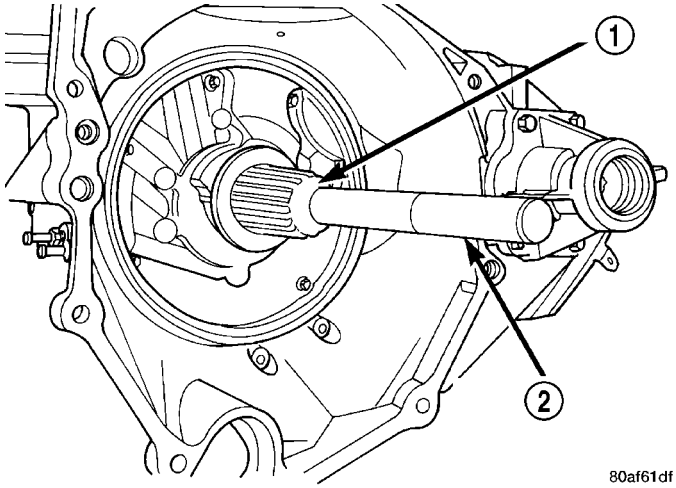

Fig. 290 Install Oil Pump Seal

1 - TOOL C-4193
2 - HANDLE TOOL C-4171

(2) Install transaxle to vehicle (Refer to 21 - TRANSMISSION/TRANSAXLE/AUTOMATIC - 41TE - INSTALLATION).

SHIFT INTERLOCK SOLENOID

DESCRIPTION

The Brake/Transmission Shift Interlock system consists of an electro-magnetic solenoid mounted to the steering column (Fig. 291). The solenoid's plunger consists of an integrated hook, which operates the shift lever pawl (part of shift lever assembly), and a plunger return spring (Fig. 292). The solenoid also has an integrated bracket, which facilitates fastening to the steering column.

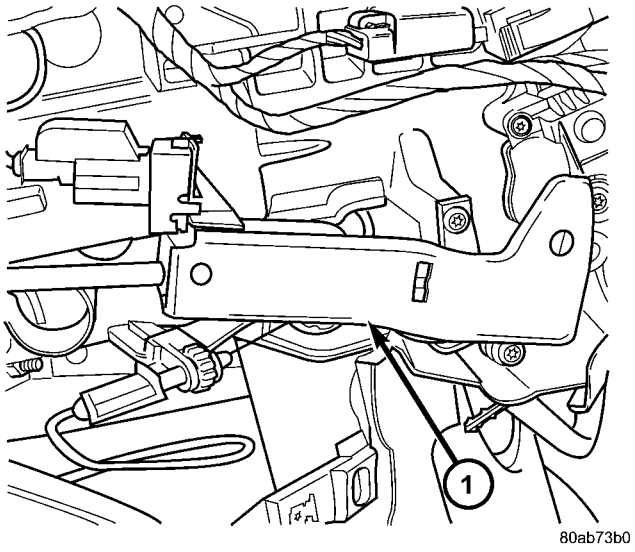

Fig. 291 Brake/Transmission Shift Interlock (BTSI) Solenoid Location

1 - BTSI SOLENOID

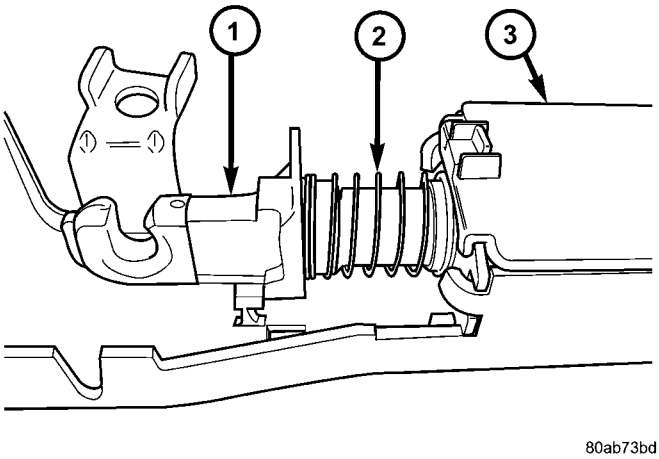

Fig. 292 Solenoid Plunger and Return Spring

1 - PLUNGER
2 - RETURN SPRING
3 - BTSI SOLENOID

SHIFT INTERLOCK SOLENOID (Continued)

OPERATION

The Brake/Transmission Shift Interlock (BTSI) Solenoid prevents the transmission shift lever from being moved out of PARK (P) unless the brake pedal is applied. The BTSI solenoid is hardwired to and controlled by the Intelligent Power Module (IPM). Battery voltage is applied to one side of the solenoid with the ignition key is in either the OFF, ON/RUN, or START positions (Fig. 293). The ground side of the solenoid is controlled by a driver within the IPM. It relies on voltage supplied from the stop lamp switch to the stop lamp sense circuit within the IPM to tell when the brake pedal is depressed. When the brake pedal is depressed, the ground circuit opens, de-energizing the solenoid. When the brake pedal is released, the ground circuit is closed, energizing the solenoid.

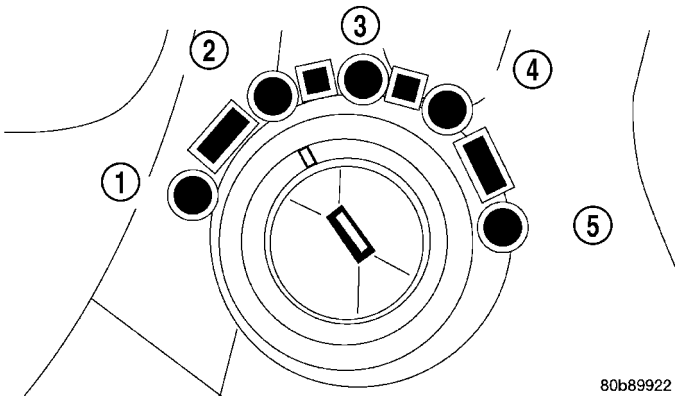

Fig. 293 Ignition Key/Switch Positions

1 - ACC
2 - LOCK
3 - OFF
4 - ON/RUN
5 - START

When the ignition key is in either the OFF, ON/RUN, or START positions, the BTSI solenoid is energized, and the solenoid plunger hook pulls the shift lever pawl into position, prohibiting the shift lever from moving out of PARK (P) (Fig. 294). When the brake pedal is depressed, the ground circuit opens, de-energizing the solenoid. This moves the gearshift lever pawl out of the way (Fig. 295), allowing the shift lever to be moved into any gear position.

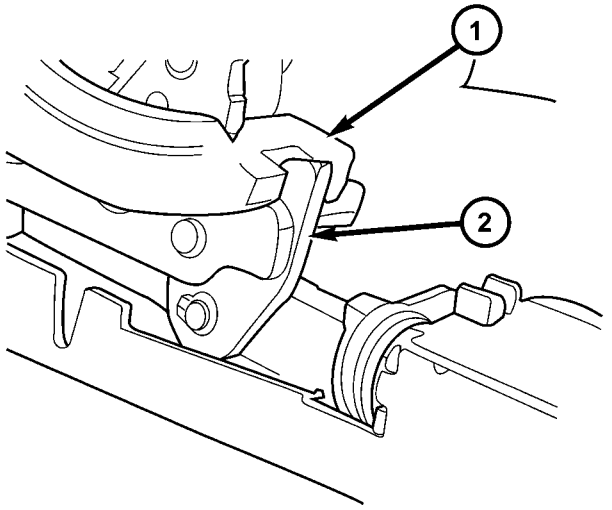

Fig. 294 Pawl Engaged to Shift Lever

1 - GEAR SHIFT LEVER
2 - GEAR SHIFT LEVER PAWL

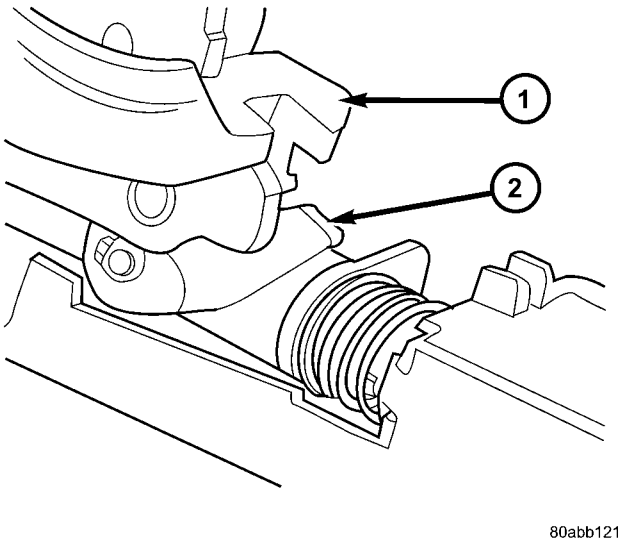

Fig. 295 Pawl Disengaged From Shift Lever

1 - GEAR SHIFT LEVER
2 - GEAR SHIFT LEVER PAWL

SHIFT INTERLOCK SOLENOID (Continued)

A conventional mechanical interlock system is also used. This system manually prohibits shifter movement when the ignition switch is in the LOCK or ACC positions. Solenoid operation is not required in these key positions.

For intended BTSI system operation, refer to the following chart:

ACTION	EXPECTED RESPONSE
1. Turn key to the ″OFF″ position.	1. Shifter CAN be shifted out of park with brake pedal applied.
2. Turn key to the ″ON/RUN″ position.	2. Shifter CANNOT be shifted out of park.
3. Turn key to the ″ON/RUN″ position and depress the brake pedal.	3. Shifter CAN be shifted out of park.
4. Leave shifter in any gear and try to return key to the ″LOCK″ or ″ACC″ position.	4. Key cannot be returned to the ″LOCK″ or ″ACC″ position.
5. Return shifter to ″PARK″ and try to remove the key.	5. Key can be removed (after returning to ″LOCK″ position).
6. With the key removed, try to shift out of ″PARK″.	6. Shifter cannot be shifted out of ″PARK″.
NOTE: Any failure to meet these expected responses requires system adjustment or repair.	

DIAGNOSIS AND TESTING - BRAKE/ TRANSMISSION SHIFT INTERLOCK SOLENOID

For intended BTSI system operation, refer to the following chart:

ACTION	EXPECTED RESPONSE
1. Turn key to the ″OFF″ position.	1. Shifter CAN be shifted out of park with brake pedal applied.
2. Turn key to the ″ON/RUN″ position.	2. Shifter CANNOT be shifted out of park.
3. Turn key to the ″ON/RUN″ position and depress the brake pedal.	3. Shifter CAN be shifted out of park.
4. Leave shifter in any gear and try to return key to the ″LOCK″ or ″ACC″ position.	4. Key cannot be returned to the ″LOCK″ or ″ACC″ position.
5. Return shifter to ″PARK″ and try to remove the key.	5. Key can be removed (after returning to ″LOCK″ position).
6. With the key removed, try to shift out of ″PARK″.	6. Shifter cannot be shifted out of ″PARK″.
NOTE: Any failure to meet these expected responses requires system repair. Refer to the appropriate Diagnostic Information.	

REMOVAL

(1) Disconnect battery negative cable.

(2) Remove instrument panel lower shroud (Fig. 296).

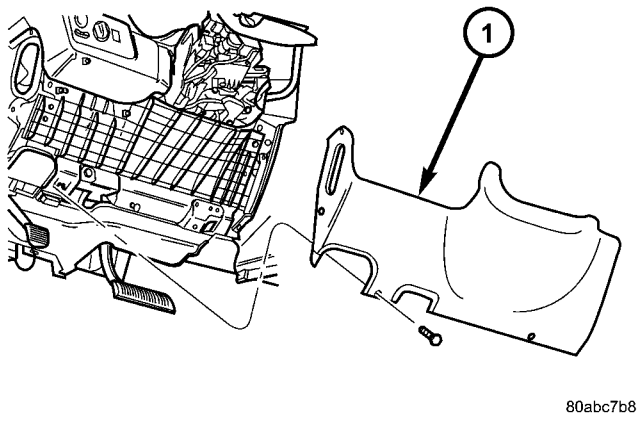

Fig. 296 Instrument Panel Lower Silencer

1 - INSTRUMENT PANEL LOWER SILENCER

(3) Remove knee bolster (Fig. 297).

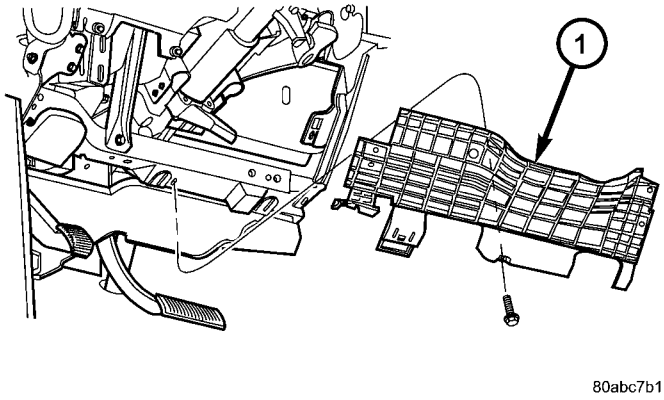

Fig. 297 Knee Bolster

1 - KNEE BOLSTER

SHIFT INTERLOCK SOLENOID (Continued)

(4) Remove steering column lower shroud.
(5) Disconnect brake/transmission shift interlock (BTSI) solenoid connector (Fig. 298).

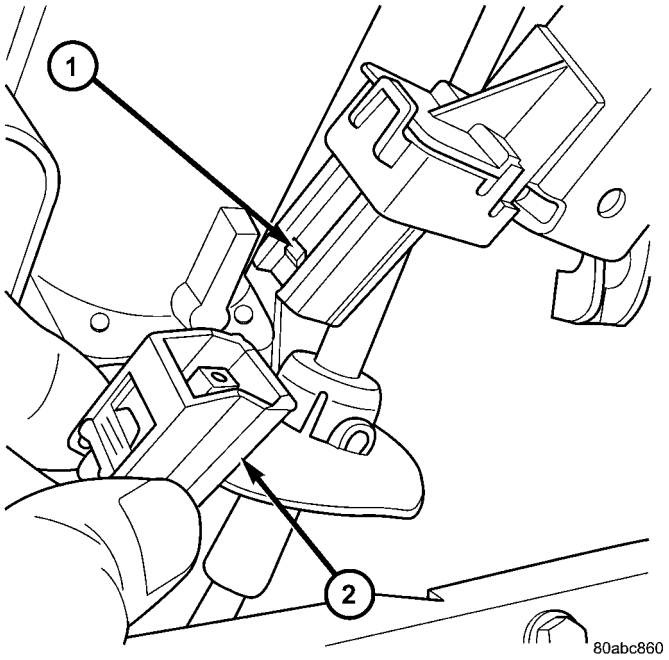

Fig. 298 BTSI Solenoid Connector

1 - BTSI SOLENOID
2 - SOLENOID CONNECTOR

(6) Remove two (2) solenoid-to-column screws (Fig. 299).

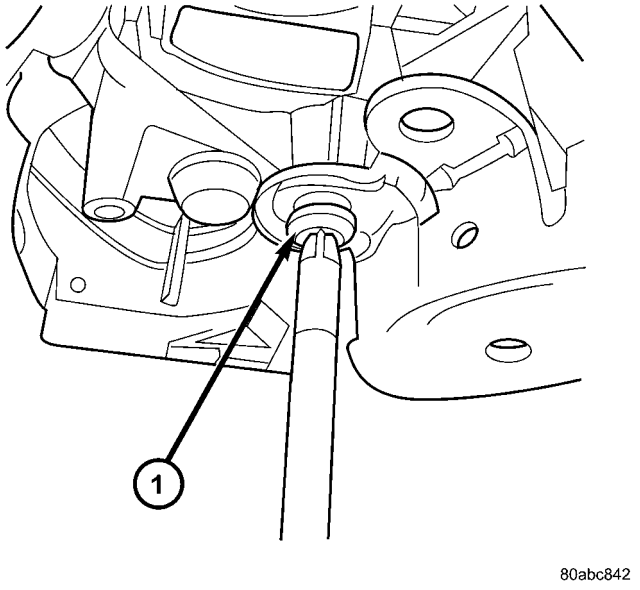

Fig. 299 Solenoid Retaining Screw

1 - SOLENOID RETAINING SCREW (2)

(7) Remove solenoid.

INSTALLATION

(1) Place interlock solenoid into position ensuring hook on end of solenoid plunger engages gearshift lever pawl pin. Install and tighten screws (Fig. 300).

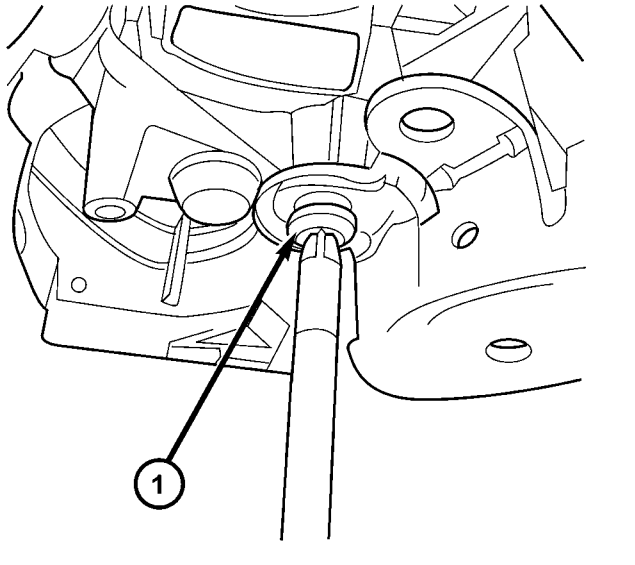

Fig. 300 Solenoid Retaining Screw

1 - SOLENOID RETAINING SCREW (2)

(2) Verify gearshift lever is in PARK (P) and connect solenoid connector (Fig. 301).

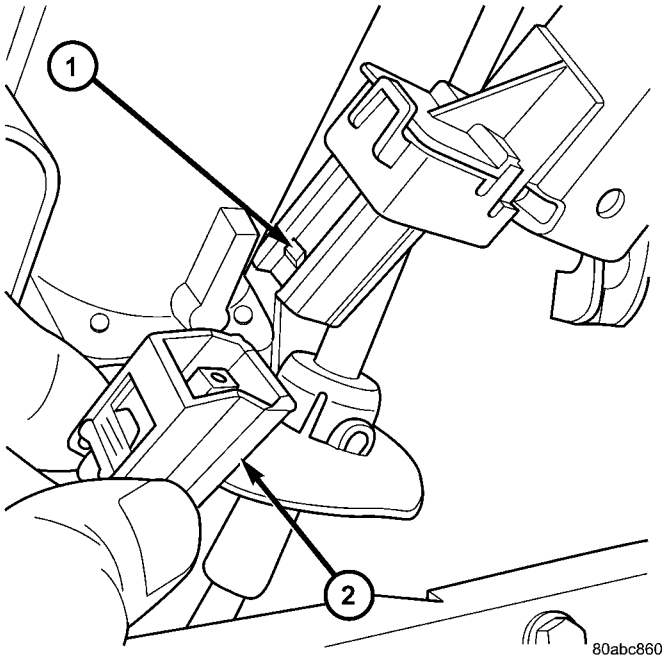

Fig. 301 BTSI Solenoid Connector

1 - BTSI SOLENOID
2 - SOLENOID CONNECTOR

SHIFT INTERLOCK SOLENOID (Continued)

(3) Install steering column lower shroud.
(4) Install knee bolster (Fig. 302).

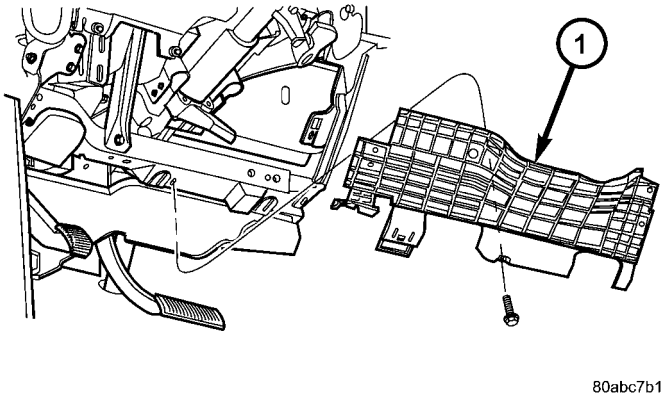

Fig. 302 Knee Bolster

1 - KNEE BOLSTER

(5) Install instrument panel lower silencer (Fig. 303).

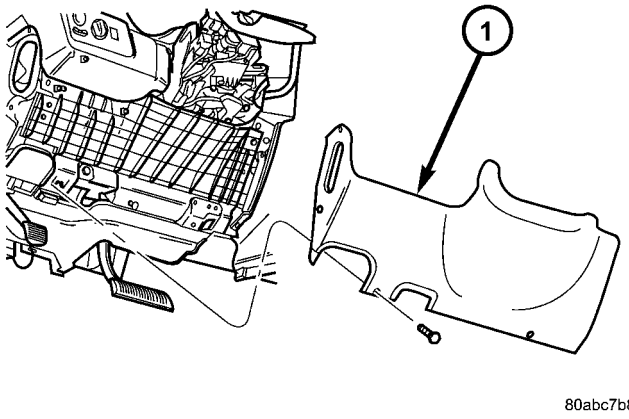

Fig. 303 Instrument Panel Lower Silencer

1 - INSTRUMENT PANEL LOWER SILENCER

(6) Connect battery negative cable.
(7) Verify proper shift interlock system operation. (Refer to 21 - TRANSMISSION/TRANSAXLE/AUTOMATIC - 31TH/SHIFT INTERLOCK SOLENOID - OPERATION)

SOLENOID/PRESSURE SWITCH ASSY

DESCRIPTION

The Solenoid/Pressure Switch Assembly (Fig. 304) is external to the transaxle and mounted to the transaxle case. The assembly consists of four solenoids that control hydraulic pressure to the LR/CC, 2/4, OD, and UD friction elements. The reverse clutch is controlled by line pressure from the manual valve in the valve body. The solenoids are contained within the Solenoid/Pressure Switch Assembly, and can only be serviced by replacing the assembly.

The solenoid assembly also contains pressure switches that monitor and send hydraulic circuit information to the PCM/TCM. Likewise, the pressure switches can only be service by replacing the assembly.

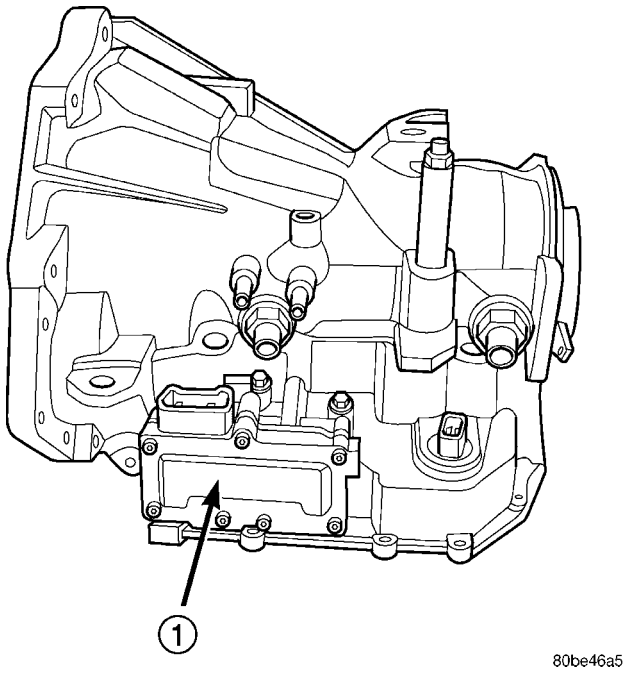

Fig. 304 Solenoid/Pressure Switch Assembly

1 - SOLENOID AND PRESSURE SWITCH ASSEMBLY

OPERATION

SOLENOIDS

The solenoids receive electrical power from the Transmission Control Relay through a single wire. The PCM/TCM energizes or operates the solenoids individually by grounding the return wire of the solenoid needed. When a solenoid is energized, the solenoid valve shifts, and a fluid passage is opened or closed (vented or applied), depending on its default operating state. The result is an apply or release of a frictional element.

The 2/4 and UD solenoids are normally applied, which by design allow fluid to pass through in their relaxed or “off” state. This allows transaxle limp-in (P,R,N,2) in the event of an electrical failure.

The continuity of the solenoids and circuits are periodically tested. Each solenoid is turned on or off depending on its current state. An inductive spike

should be detected by the PCM/TCM during this test. It no spike is detected, the circuit is tested again to verify the failure. In addition to the periodic testing, the solenoid circuits are tested if a speed ratio or pressure switch error occurs.

PRESSURE SWITCHES

The PCM/TCM relies on three pressure switches to monitor fluid pressure in the L/R, 2/4, and OD hydraulic circuits. The primary purpose of these switches is to help the PCM/TCM detect when clutch circuit hydraulic failures occur. The range for the pressure switch closing and opening points is 11-23 psi. Typically the switch opening point will be approximately one psi lower than the closing point. For example, a switch may close at 18 psi and open at 17 psi. The switches are continuously monitored by the PCM/TCM for the correct states (open or closed) in each gear as shown in the following chart:

PRESSURE SWITCH STATES

GEAR	L/R	2/4	OD
R	OP	OP	OP
P/N	CL	OP	OP
1st	CL	OP	OP
2nd	OP	CL	OP
D	OP	OP	CL
OD	OP	CL	CL

OP = OPEN

CL = CLOSED

A Diagnostic Trouble Code (DTC) will set if the PCM/TCM senses any switch open or closed at the wrong time in a given gear.

The PCM/TCM also tests the 2/4 and OD pressure switches when they are normally off (OD and 2/4 are tested in 1st gear, OD in 2nd gear, and 2/4 in 3rd gear). The test simply verifies that they are operational, by looking for a closed state when the corresponding element is applied. Immediately after a shift into 1st, 2nd, or 3rd gear with the engine speed above 1000 rpm, the PCM/TCM momentarily turns on element pressure to the 2/4 and/or OD clutch circuits to identify that the appropriate switch has closed. If it doesn't close, it is tested again. If the switch fails to close the second time, the appropriate Diagnostic Trouble Code (DTC) will set.

REMOVAL

NOTE: If solenoid/pressure switch assembly is being replaced, the "Quick-Learn" procedure must be performed. (Refer to 8 - ELECTRICAL/ELECTRONIC CONTROL MODULES/TRANSMISSION CONTROL MODULE - STANDARD PROCEDURE)

(1) Disconnect battery negative cable.
(2) Remove air cleaner assembly.
(3) Disconnect solenoid/pressure switch assembly connector (Fig. 305).
(4) Disconnect input speed sensor connector (Fig. 305).

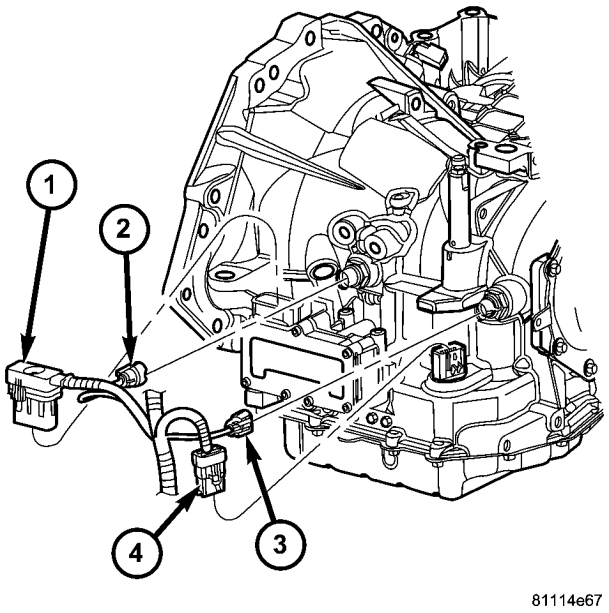

Fig. 305 Transmission Connectors

1 - SOLENOID PACK CONNECTOR
2 - INPUT SPEED SENSOR CONNECTOR
3 - OUTPUT SPEED SENSOR CONNECTOR
4 - TRANSMISSION RANGE SENSOR CONNECTOR

SOLENOID/PRESSURE SWITCH ASSY (Continued)

(5) Remove input speed sensor (Fig. 306).

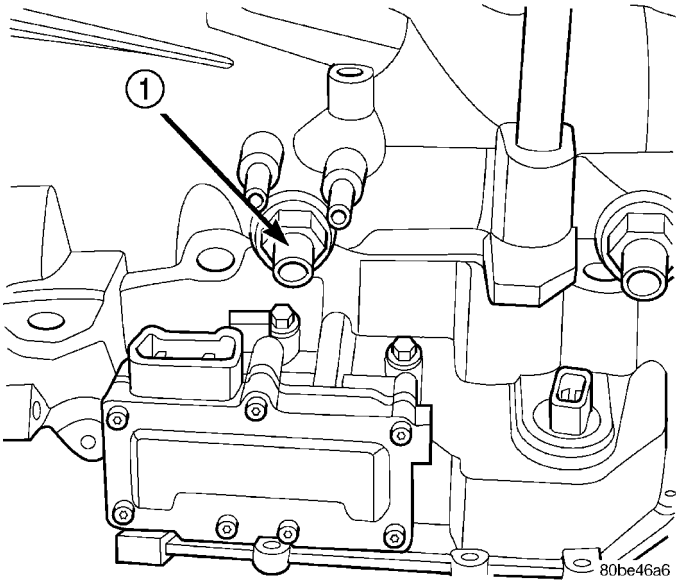

Fig. 306 Input Speed Sensor

1 - INPUT SPEED SENSOR

(6) Remove three (3) solenoid/pressure switch assembly-to-transaxle case bolts (Fig. 307).

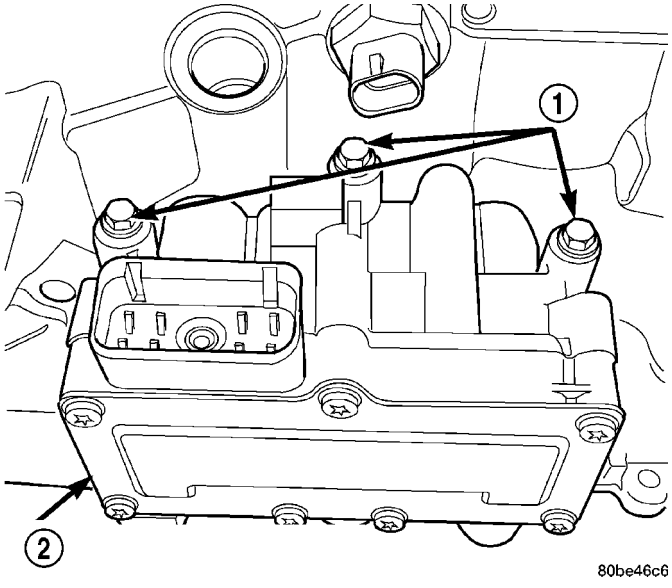

Fig. 307 Solenoid/Pressure Switch Assembly-to-Case Bolts

1 - BOLTS
2 - SOLENOID AND PRESSURE SWITCH ASSEMBLY

(7) Remove solenoid/pressure switch assembly and gasket (Fig. 308). Use care to prevent gasket material and foreign objects from become lodged in the transaxle case ports.

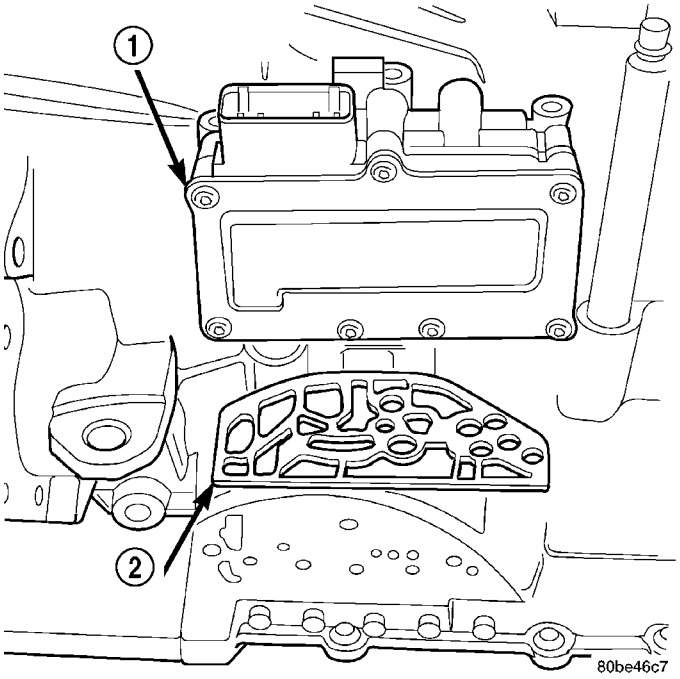

Fig. 308 Solenoid/Pressure Switch Assembly and Gasket

1 - SOLENOID/PRESSURE SWITCH ASSEMBLY
2 - GASKET

INSTALLATION

NOTE: If solenoid/pressure switch assembly is being replaced, it is necessary to perform the "Quick-Learn" procedure. (Refer to 8 - ELECTRICAL/ELECTRONIC CONTROL MODULES/TRANSMISSION CONTROL MODULE - STANDARD PROCEDURE)

(1) Install solenoid/pressure switch assembly and new gasket to transaxle (Fig. 308).

(2) Install and torque three (3) bolts (Fig. 307) to 13 N·m (110 in. lbs.).

(3) Install input speed sensor (Fig. 306) and torque to 27 N·m (20 ft. lbs.).

(4) Connect input speed sensor connector (Fig. 305).

(5) Install solenoid/pressure switch 8-way connector and torque to 4 N·m (35 in. lbs.) (Fig. 305).

(6) Install air cleaner assembly.

(7) Connect battery negative cable.

(8) If solenoid/pressure switch assembly was replaced, perform the "Quick-Learn" procedure. (Refer to 8 - ELECTRICAL/ELECTRONIC CONTROL MODULES/TRANSMISSION CONTROL MODULE - STANDARD PROCEDURE)

SPEED SENSOR - INPUT

DESCRIPTION

The Input Speed Sensor is a two-wire magnetic pickup device that generates AC signals as rotation occurs. It is threaded into the transaxle case (Fig. 309), sealed with an o-ring (Fig. 310), and is considered a primary input to the Powertrain/Transmission Control Module.

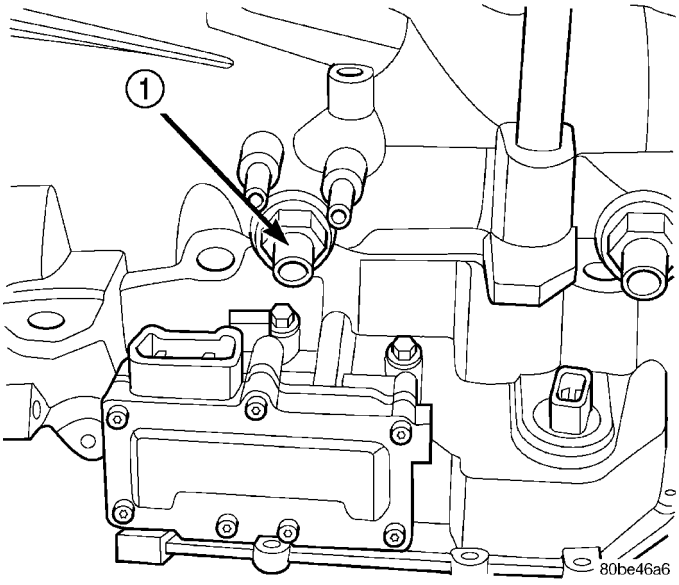

Fig. 309 Input Speed Sensor Location

1 - INPUT SPEED SENSOR

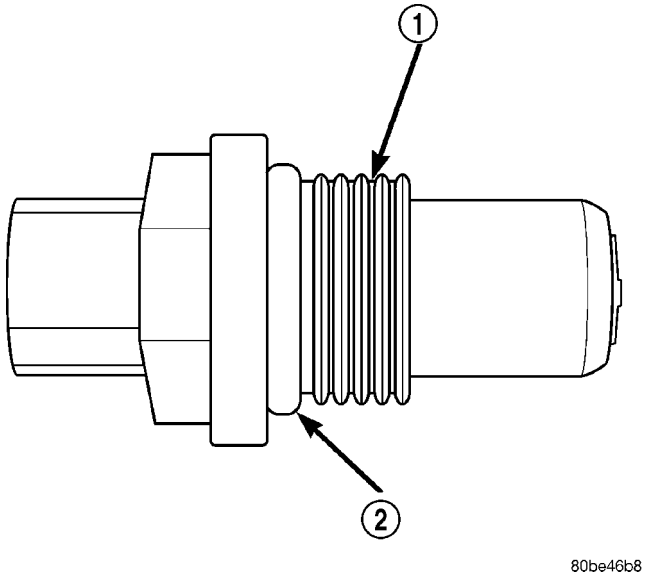

Fig. 310 O-Ring Location

1 - INPUT SPEED SENSOR
2 - O-RING

OPERATION

The Input Speed Sensor provides information on how fast the input shaft is rotating. As the teeth of the input clutch hub pass by the sensor coil (Fig. 311), an AC voltage is generated and sent to the PCM/TCM. The PCM/TCM interprets this information as input shaft rpm.

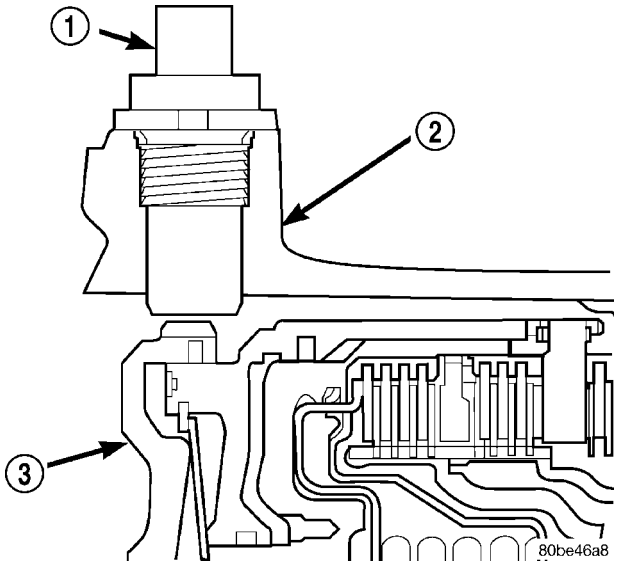

Fig. 311 Sensor Relation to Input Clutch Hub

1 - INPUT SPEED SENSOR
2 - TRANSAXLE CASE
3 - INPUT CLUTCH HUB

The PCM/TCM compares the input speed signal with output speed signal to determine the following:

- Transmission gear ratio
- Speed ratio error detection
- CVI calculation

The PCM/TCM also compares the input speed signal and the engine speed signal to determine the following:

- Torque converter clutch slippage
- Torque converter element speed ratio

SPEED SENSOR - INPUT (Continued)

REMOVAL

(1) Disconnect battery negative cable.

(2) Disconnect input speed sensor connector (Fig. 312).

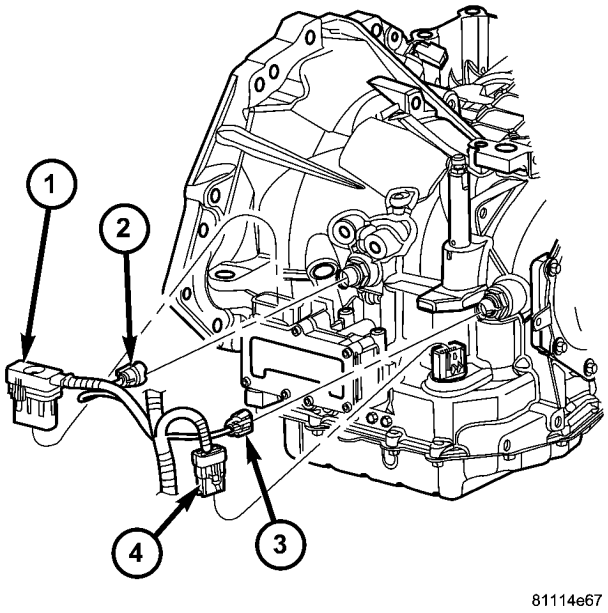

Fig. 312 Transmission Connectors

1 - SOLENOID PACK CONNECTOR
2 - INPUT SPEED SENSOR CONNECTOR
3 - OUTPUT SPEED SENSOR CONNECTOR
4 - TRANSMISSION RANGE SENSOR CONNECTOR

(3) Unscrew and remove input speed sensor (Fig. 313).

(4) Inspect speed sensor o-ring (Fig. 314) and replace if necessary.

INSTALLATION

(1) Verify o-ring is installed into position (Fig. 314).

(2) Install and tighten input speed sensor to 27 N·m (20 ft. lbs.) (Fig. 313).

(3) Connect speed sensor connector (Fig. 312).

(4) Connect battery negative cable.

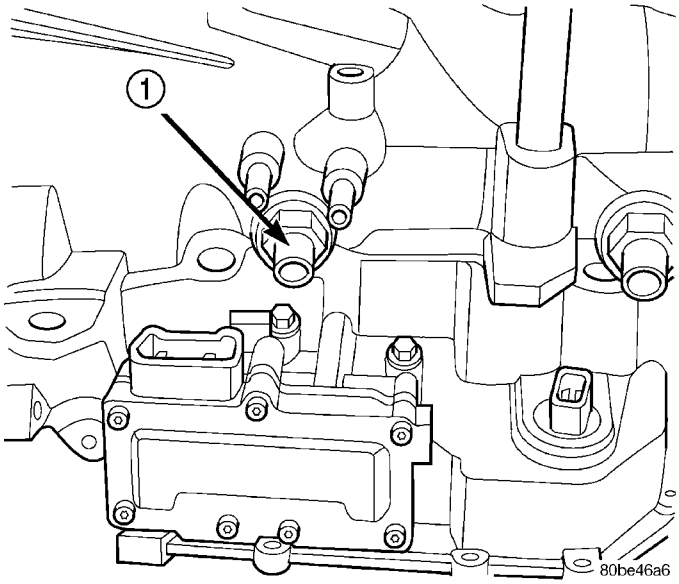

Fig. 313 Input (Turbine) Speed Sensor

1 - INPUT SPEED SENSOR

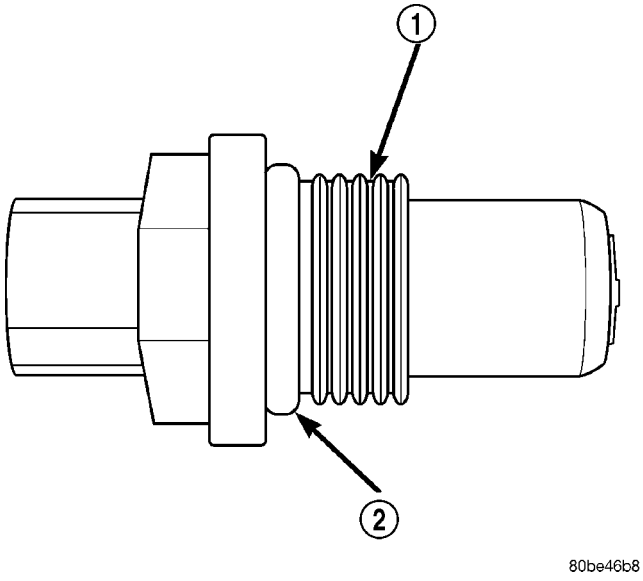

Fig. 314 O-ring Location

1 - INPUT SPEED SENSOR
2 - O-RING

SPEED SENSOR - OUTPUT

DESCRIPTION

The Output Speed Sensor is a two-wire magnetic pickup device that generates an AC signal as rotation occurs. It is threaded into the transaxle case (Fig. 315), sealed with an o-ring (Fig. 316), and is considered a primary input to the Powetrain/Transmission Control Module.

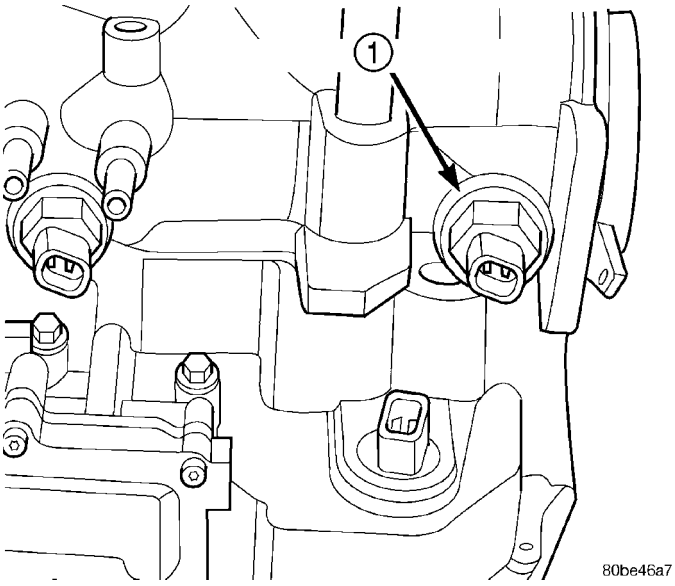

Fig. 315 Output Speed Sensor

1 - OUTPUT SPEED SENSOR

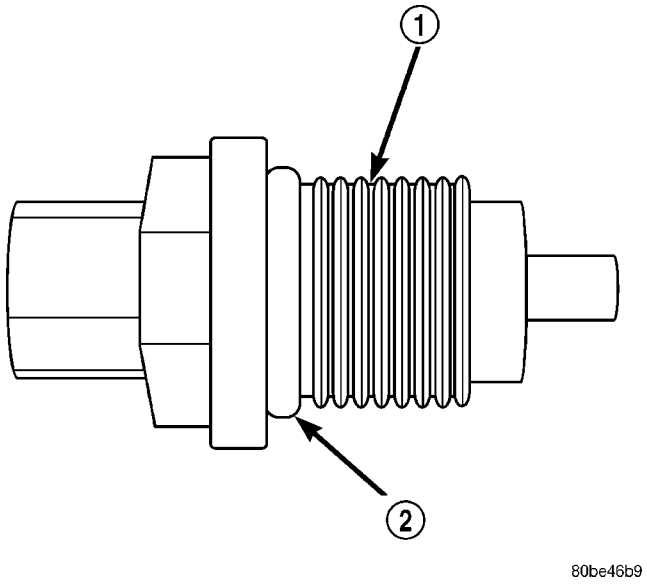

Fig. 316 O-Ring Location

1 - OUTPUT SPEED SENSOR
2 - O-RING

OPERATION

The Output Speed Sensor provides information on how fast the output shaft is rotating. As the rear planetary carrier park pawl lugs pass by the sensor coil (Fig. 317), an AC voltage is generated and sent to the PCM/TCM. The PCM/TCM interprets this information as output shaft rpm.

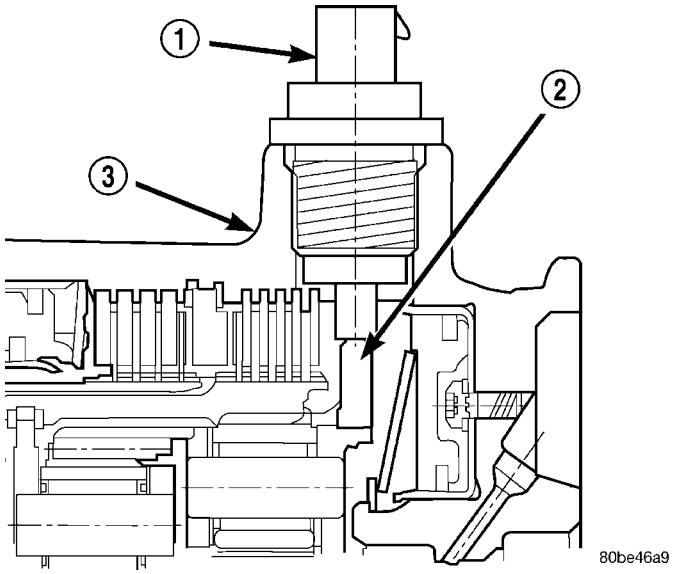

Fig. 317 Sensor Relation to Planet Carrier Park Pawl

1 - OUTPUT SPEED SENSOR
2 - REAR PLANET CARRIER/OUTPUT SHAFT ASSEMBLY
3 - TRANSAXLE CASE

The PCM/TCM compares the input and output speed signals to determine the following:

- Transmission gear ratio
- Speed ratio error detection
- CVI calculation

VEHICLE SPEED SIGNAL

The vehicle speed signal is taken from the Output Speed Sensor. The PCM converts this signal into a pulse per mile signal and sends the vehicle speed message across the communication bus to the BCM. The BCM sends this signal to the Instrument Cluster to display vehicle speed to the driver. The vehicle speed signal pulse is roughly 8000 pulses per mile.

SPEED SENSOR - OUTPUT (Continued)

REMOVAL

(1) Disconnect battery negative cable.
(2) Raise vehicle on hoist.
(3) Disconnect output speed sensor connector (Fig. 318).

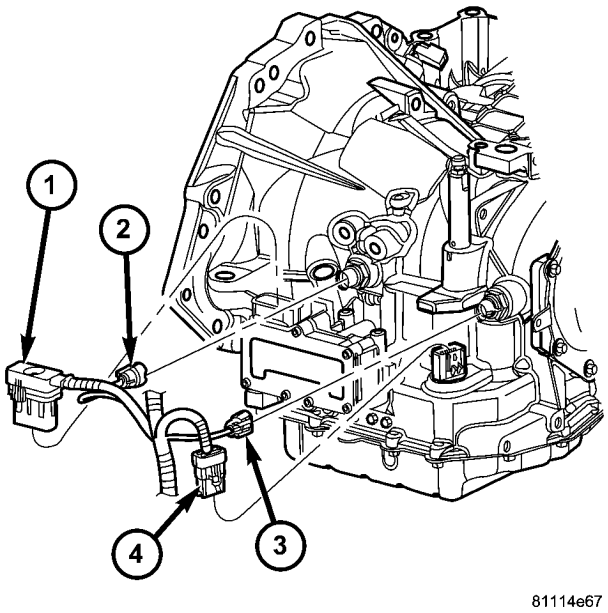

Fig. 318 Transmission Connectors

1 - SOLENOID PACK CONNECTOR
2 - INPUT SPEED SENSOR CONNECTOR
3 - OUTPUT SPEED SENSOR CONNECTOR
4 - TRANSMISSION RANGE SENSOR CONNECTOR

(4) Unscrew and remove output speed sensor (Fig. 319).
(5) Inspect speed sensor o-ring (Fig. 320) and replace if necessary.

INSTALLATION

(1) Verify o-ring is installed into position (Fig. 320).
(2) Install and tighten input speed sensor to 27 N·m (20 ft. lbs.).
(3) Connect speed sensor connector (Fig. 318).
(4) Connect battery negative cable.

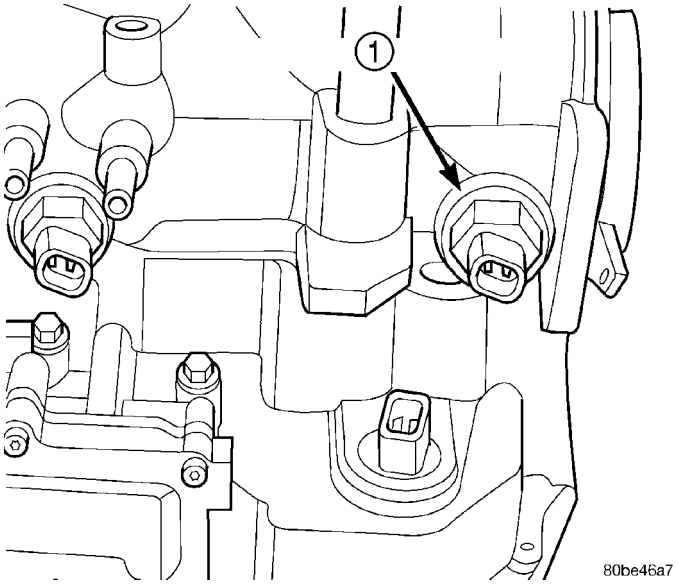

Fig. 319 Output Speed Sensor

1 - OUTPUT SPEED SENSOR

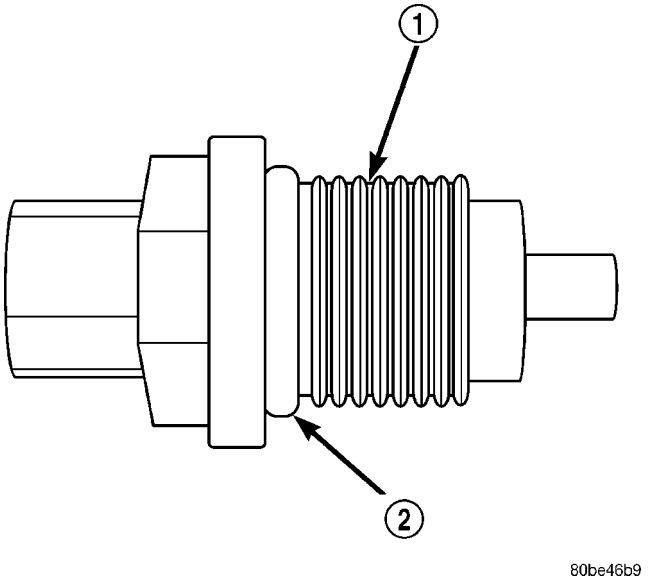

Fig. 320 O-ring Location

1 - OUTPUT SPEED SENSOR
2 - O-RING

TORQUE CONVERTER

DESCRIPTION

The torque converter (Fig. 321) is a hydraulic device that couples the engine crankshaft to the transmission. The torque converter consists of an outer shell with an internal turbine, a stator, an overrunning clutch, an impeller and an electronically applied converter clutch. The converter clutch provides reduced engine speed and greater fuel economy when engaged. Clutch engagement also provides reduced transmission fluid temperatures. The converter clutch engages in third gear. The torque converter hub drives the transmission oil (fluid) pump.

The torque converter is a sealed, welded unit that is not repairable and is serviced as an assembly.

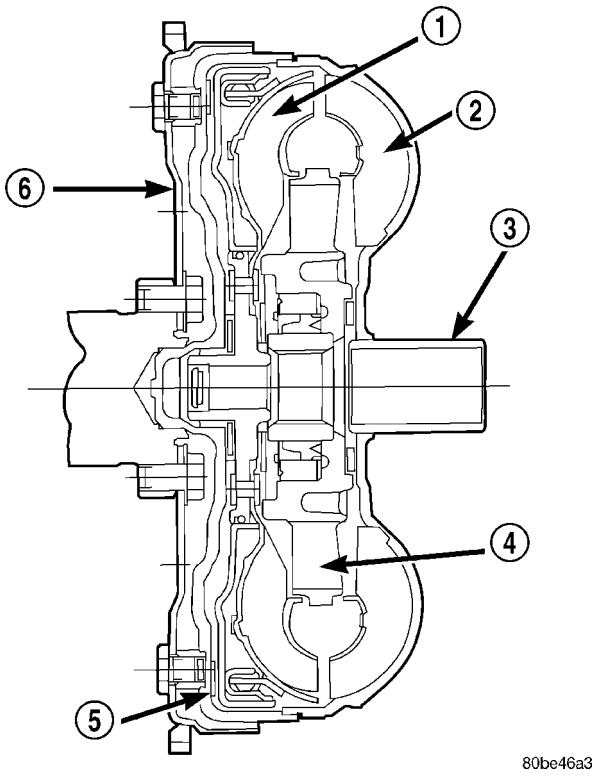

Fig. 321 Torque Converter Assembly

1 - TURBINE
2 - IMPELLER
3 - HUB
4 - STATOR
5 - CONVERTER CLUTCH DISC
6 - DRIVE PLATE

TORQUE CONVERTER (Continued)

IMPELLER

The impeller (Fig. 322) is an integral part of the converter housing. The impeller consists of curved blades placed radially along the inside of the housing on the transmission side of the converter. As the converter housing is rotated by the engine, so is the impeller, because they are one and the same and are the driving member of the system.

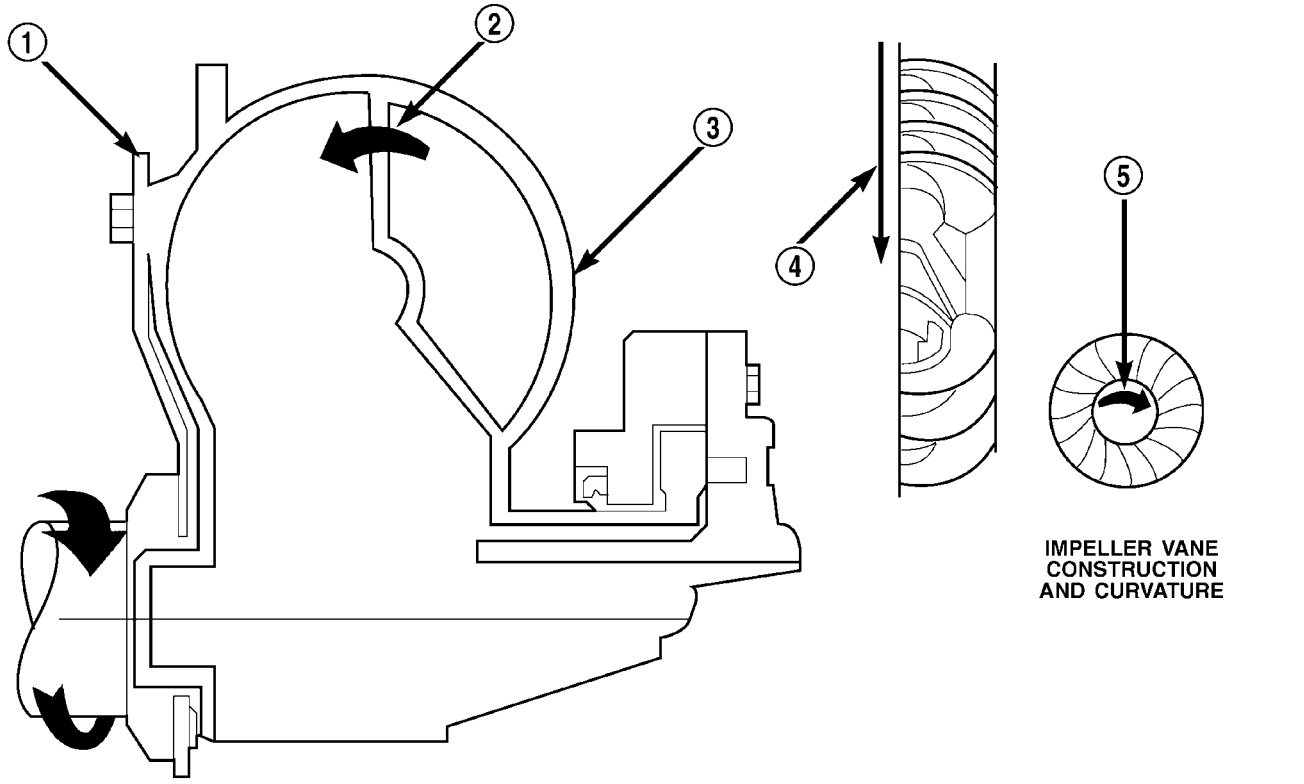

Fig. 322 Impeller

1 - ENGINE FLEXPLATE
2 - OIL FLOW FROM IMPELLER SECTION INTO TURBINE SECTION
3 - IMPELLER VANES AND COVER ARE INTEGRAL
4 - ENGINE ROTATION
5 - ENGINE ROTATION

TORQUE CONVERTER (Continued)

TURBINE

The turbine (Fig. 323) is the output, or driven, member of the converter. The turbine is mounted within the housing opposite the impeller, but is not attached to the housing. The input shaft is inserted through the center of the impeller and splined into the turbine. The design of the turbine is similar to the impeller, except the blades of the turbine are curved in the opposite direction.

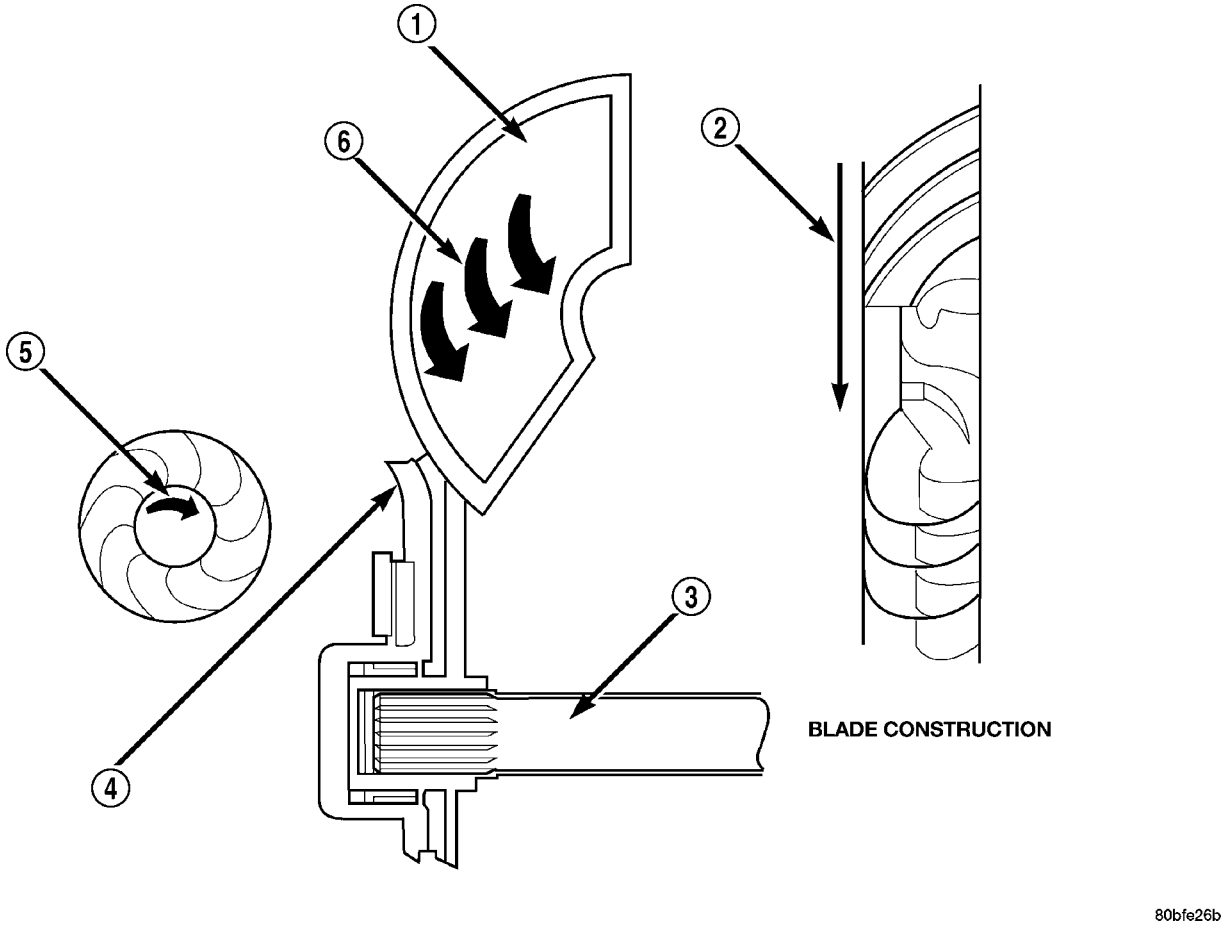

Fig. 323 Turbine

1 - TURBINE VANE
2 - ENGINE ROTATION
3 - INPUT SHAFT
4 - PORTION OF TORQUE CONVERTER COVER
5 - ENGINE ROTATION
6 - OIL FLOW WITHIN TURBINE SECTION

TORQUE CONVERTER (Continued)

STATOR

The stator assembly (Fig. 324) is mounted on a stationary shaft which is an integral part of the oil pump. The stator is located between the impeller and turbine within the torque converter case (Fig. 325). The stator contains an over-running clutch, which allows the stator to rotate only in a clockwise direction. When the stator is locked against the over-running clutch, the torque multiplication feature of the torque converter is operational.

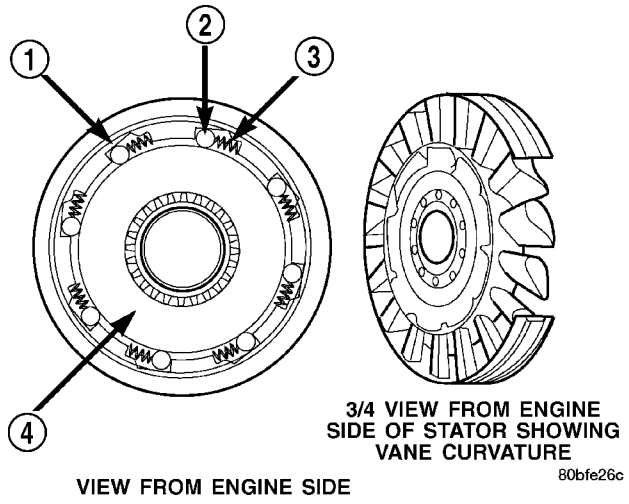

Fig. 324 Stator Components

1 - CAM (OUTER RACE)
2 - ROLLER
3 - SPRING
4 - INNER RACE

TORQUE CONVERTER CLUTCH (TCC)

The TCC (Fig. 326) was installed to improve the efficiency of the torque converter that is lost to the slippage of the fluid coupling. Although the fluid coupling provides smooth, shock–free power transfer, it is natural for all fluid couplings to slip. If the impeller and turbine were mechanically locked together, a zero slippage condition could be obtained. A hydraulic piston was added to the turbine, and a friction material was added to the inside of the front cover to provide this mechanical lock-up.

OPERATION

The converter impeller (Fig. 327) (driving member), which is integral to the converter housing and bolted to the engine drive plate, rotates at engine speed. The converter turbine (driven member), which reacts from fluid pressure generated by the impeller, rotates and turns the transmission input shaft.

TURBINE

As the fluid that was put into motion by the impeller blades strikes the blades of the turbine, some of the energy and rotational force is transferred into the turbine and the input shaft. This causes both of them (turbine and input shaft) to rotate in a clockwise direction following the impeller. As the fluid is leav-

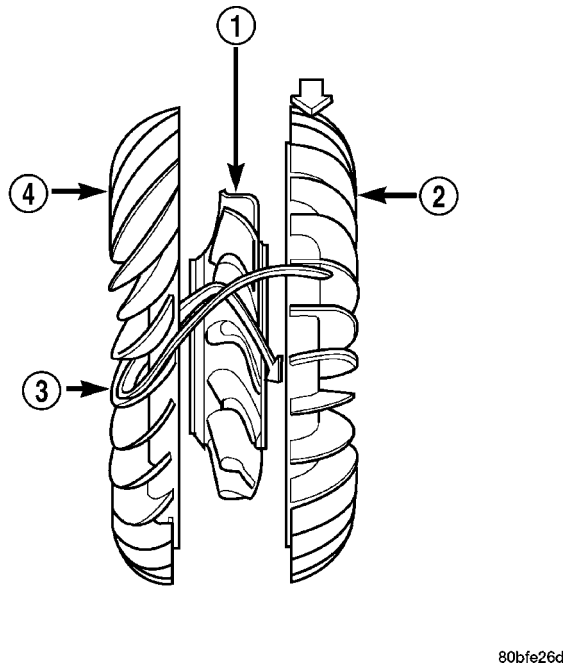

Fig. 325 Stator Location

1 - STATOR
2 - IMPELLER
3 - FLUID FLOW
4 - TURBINE

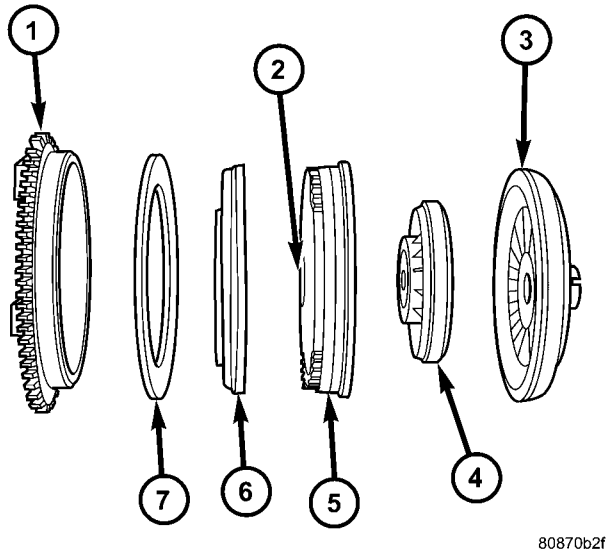

Fig. 326 Torque Converter Clutch (TCC)

1 - IMPELLER FRONT COVER
2 - THRUST WASHER ASSEMBLY
3 - IMPELLER
4 - STATOR
5 - TURBINE
6 - PISTON
7 - FRICTION DISC

TORQUE CONVERTER (Continued)

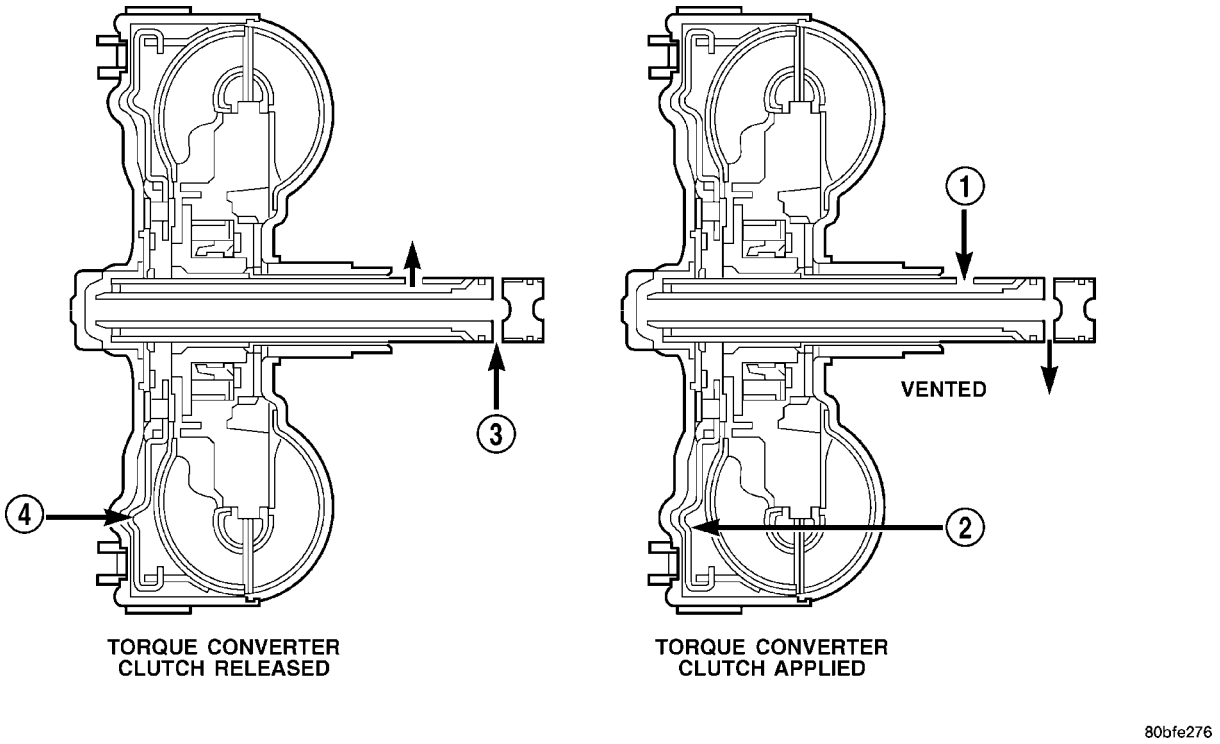

Fig. 327 Torque Converter Fluid Operation

1 - APPLY PRESSURE
2 - THE PISTON MOVES SLIGHTLY FORWARD
3 - RELEASE PRESSURE
4 - THE PISTON MOVES SLIGHTLY REARWARD

ing the trailing edges of the turbine's blades it continues in a "hindering" direction back toward the impeller. If the fluid is not redirected before it strikes the impeller, it will strike the impeller in such a direction that it would tend to slow it down.

STATOR

Torque multiplication is achieved by locking the stator's over-running clutch to its shaft (Fig. 328). Under stall conditions (the turbine is stationary), the oil leaving the turbine blades strikes the face of the stator blades and tries to rotate them in a counterclockwise direction. When this happens the over–running clutch of the stator locks and holds the stator from rotating. With the stator locked, the oil strikes the stator blades and is redirected into a "helping" direction before it enters the impeller. This circulation of oil from impeller to turbine, turbine to stator, and stator to impeller, can produce a maximum torque multiplication of about 2.4:1. As the turbine begins to match the speed of the impeller, the fluid that was hitting the stator in such as way as to cause it to lock–up is no longer doing so. In this condition of operation, the stator begins to free wheel and the converter acts as a fluid coupling.

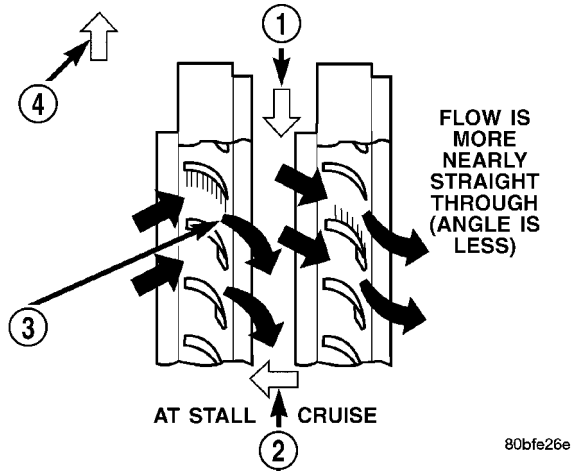

Fig. 328 Stator Operation

1 - DIRECTION STATOR WILL FREE WHEEL DUE TO OIL PUSHING ON BACKSIDE OF VANES
2 - FRONT OF ENGINE
3 - INCREASED ANGLE AS OIL STRIKES VANES
4 - DIRECTION STATOR IS LOCKED UP DUE TO OIL PUSHING AGAINST STATOR VANES

TORQUE CONVERTER CLUTCH (TCC)

In a standard torque converter, the impeller and turbine are rotating at about the same speed and the stator is freewheeling, providing no torque multiplication. By applying the turbine's piston to the front cover's friction material, a total converter engage-

ment can be obtained. The result of this engagement is a direct 1:1 mechanical link between the engine and the transmission.

The engagement and disengagement of the TCC are automatic and controlled by the Powertrain Control Module (PCM). The engagement cannot be activated in the lower gears because it eliminates the torque multiplication effect of the torque converter necessary for acceleration. Inputs that determine clutch engagement are: coolant temperature, vehicle speed and throttle position. The torque converter clutch is engaged by the clutch solenoid on the valve body. The clutch will engage at approximately 56 km/h (35 mph) with light throttle, after the shift to third gear.

REMOVAL

(1) Remove transmission and torque converter from vehicle. (Refer to 21 - TRANSMISSION/TRANSAXLE/AUTOMATIC - 41TE - REMOVAL)

(2) Place a suitable drain pan under the converter housing end of the transmission.

CAUTION: Verify that transmission is secure on the lifting device or work surface, the center of gravity of the transmission will shift when the torque converter is removed creating an unstable condition. The torque converter is a heavy unit. Use caution when separating the torque converter from the transmission.

(3) Pull the torque converter forward until the center hub clears the oil pump seal.

(4) Separate the torque converter from the transmission.

INSTALLATION

Check converter hub and drive notches for sharp edges, burrs, scratches, or nicks. Polish the hub and notches with 320/400 grit paper or crocus cloth if necessary. The hub must be smooth to avoid damaging the pump seal at installation.

(1) Lubricate converter hub and oil pump seal lip with transmission fluid.

(2) Place torque converter in position on transmission.

CAUTION: Do not damage oil pump seal or bushing while inserting torque converter into the front of the transmission.

(3) Align torque converter to oil pump seal opening.

(4) Insert torque converter hub into oil pump.

(5) While pushing torque converter inward, rotate converter until converter is fully seated in the oil pump gears.

(6) Check converter seating with a scale and straightedge (Fig. 329). Surface of converter lugs should be 1/2 in. to rear of straightedge when converter is fully seated.

(7) If necessary, temporarily secure converter with C-clamp attached to the converter housing.

(8) Install the transmission in the vehicle. (Refer to 21 - TRANSMISSION/TRANSAXLE/AUTOMATIC - 41TE - INSTALLATION)

(9) Fill the transmission with the recommended fluid. (Refer to 21 - TRANSMISSION/TRANSAXLE/AUTOMATIC - 41TE/FLUID - STANDARD PROCEDURE)

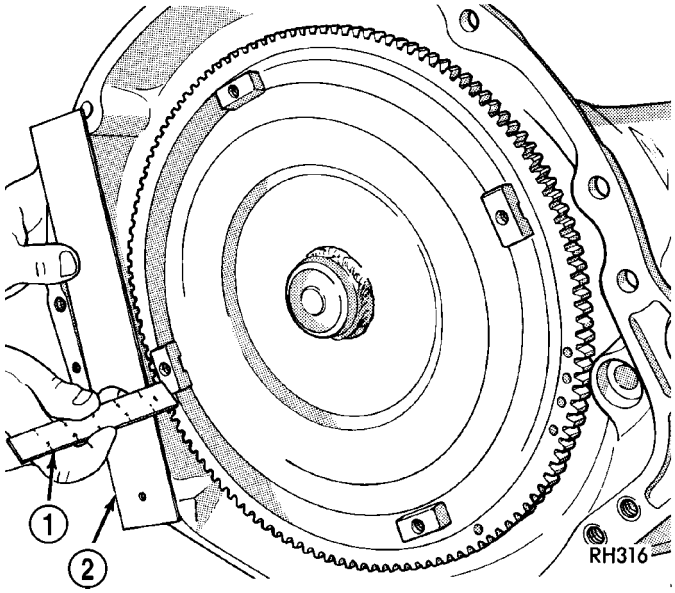

Fig. 329 Checking Torque Converter Seating

1 - SCALE
2 - STRAIGHTEDGE

TRANSMISSION CONTROL RELAY

DESCRIPTION

The transmission control relay (Fig. 330) is located in the Intelligent Power Module (IPM), which is located on the left side of the engine compartment between the battery and left fender.

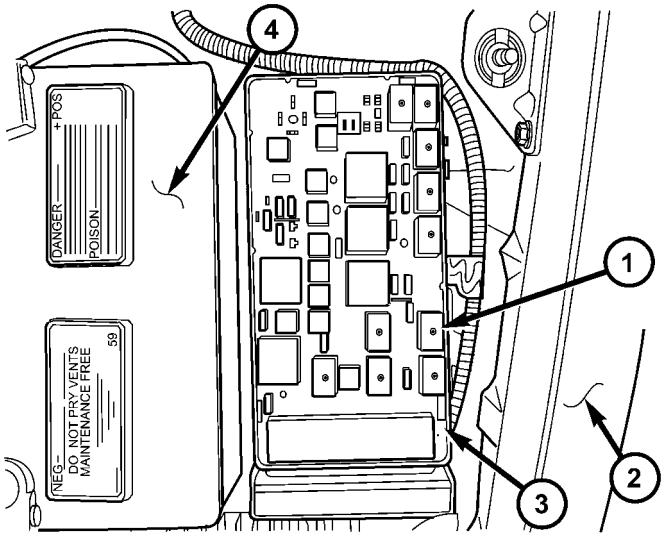

Fig. 330 Transmission Control Relay Location

1 - TRANSMISSION CONTROL RELAY
2 - LEFT FENDER
3 - INTELLIGENT POWER MODULE (IPM)
4 - BATTERY

OPERATION

The relay is supplied fused B+ voltage, energized by the PCM/TCM, and is used to supply power to the solenoid pack when the transmission is in normal operating mode. When the relay is "off", no power is supplied to the solenoid pack and the transmission is in "limp-in" mode. After a controller reset (ignition key turned to the "run" position or after cranking engine), the PCM/TCM energizes the relay. Prior to this, the PCM/TCM verifies that the contacts are open by checking for no voltage at the switched battery terminals. After this is verified, the voltage at the solenoid pack pressure switches is checked. After the relay is energized, the PCM/TCM monitors the terminals to verify that the voltage is greater than 3 volts.

TRANSMISSION RANGE SENSOR

DESCRIPTION

The Transmission Range Sensor (TRS) is mounted to the top of the valve body inside the transaxle and can only be serviced by removing the valve body. The electrical connector extends through the transaxle case (Fig. 331).

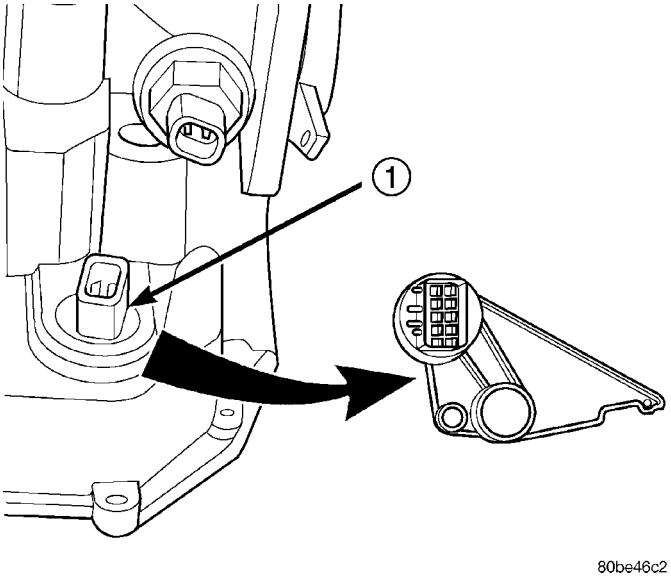

Fig. 331 Transmission Range Sensor (TRS) Location

1 - TRANSMISSION RANGE SENSOR

The Transmission Range Sensor (TRS) has four switch contacts that monitor shift lever position and send the information to the PCM/TCM.

The TRS also has an integrated temperature sensor (thermistor) that communicates transaxle temperature to the TCM and PCM (Fig. 332).

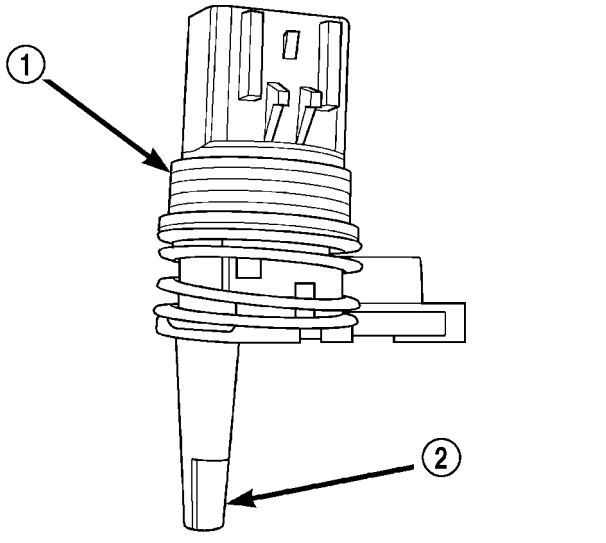

Fig. 332 Transmission Temperature Sensor

1 - TRANSMISSION RANGE SENSOR
2 - TEMPERATURE SENSOR

TRANSMISSION RANGE SENSOR (Continued)

OPERATION

The Transmission Range Sensor (TRS) (Fig. 331) communicates shift lever position (SLP) to the PCM/TCM as a combination of open and closed switches. Each shift lever position has an assigned combination of switch states (open/closed) that the PCM/TCM receives from four sense circuits. The PCM/TCM interprets this information and determines the appropriate transaxle gear position and shift schedule.

Since there are four switches, there are 16 possible combinations of open and closed switches (codes). Seven of these codes are related to gear position and three are recognized as "between gear" codes. This results in six codes which should never occur. These are called "invalid" codes. An invalid code will result in a DTC, and the PCM/TCM will then determine the shift lever position based on pressure switch data. This allows reasonably normal transmission operation with a TRS failure.

TRS SWITCH STATES

SLP	T42	T41	T3	T1
P	CL	CL	CL	OP
R	CL	OP	OP	OP
N	CL	CL	OP	CL
OD	OP	OP	OP	CL
3	OP	OP	CL	OP
L	CL	OP	CL	CL

TRANSMISSION TEMPERATURE SENSOR

The TRS has an integrated thermistor (Fig. 332) that the PCM/TCM uses to monitor the transmission's sump temperature. Since fluid temperature can affect transmission shift quality and convertor lock up, the PCM/TCM requires this information to determine which shift schedule to operate in. The PCM also monitors this temperature data so it can energize the vehicle cooling fan(s) when a transmission "overheat" condition exists. If the thermistor circuit fails, the PCM/TCM will revert to calculated oil temperature usage.

CALCULATED TEMPERATURE

A failure in the temperature sensor or circuit will result in calculated temperature being substituted for actual temperature. Calculated temperature is a predicted fluid temperature which is calculated from a combination of inputs:

- Battery (ambient) temperature
- Engine coolant temperature
- In-gear run time since start-up

REMOVAL

(1) Remove valve body assembly from transaxle. (Refer to 21 - TRANSMISSION/TRANSAXLE/AUTOMATIC - 41TE/VALVE BODY - REMOVAL)

(2) Remove transmission range sensor retaining screw and remove sensor from valve body (Fig. 333).

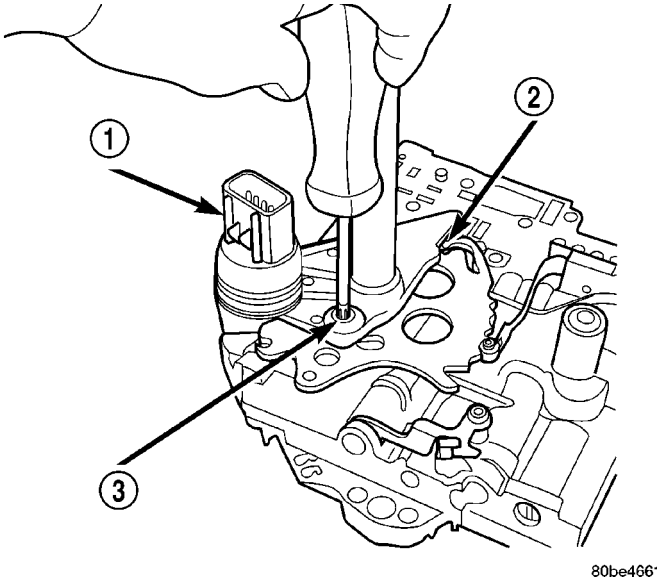

Fig. 333 Remove Transmission Range Sensor

1 - TRANSMISSION RANGE SENSOR
2 - MANUAL VALVE CONTROL PIN
3 - RETAINING SCREW

(3) Remove TRS from manual shaft.

INSTALLATION

(1) Install transmission range sensor (TRS) to the valve body and torque retaining screw (Fig. 333) to 5 N·m (45 in. lbs.).

(2) Install valve body to transaxle. (Refer to 21 - TRANSMISSION/TRANSAXLE/AUTOMATIC - 41TE/VALVE BODY - INSTALLATION)

VALVE BODY

DESCRIPTION

The valve body assembly consists of a cast aluminum valve body, a separator plate, and transfer plate. The valve body contains valves and check balls that control fluid delivery to the torque converter clutch, solenoid/pressure switch assembly, and frictional clutches. The valve body contains the following components (Fig. 334):

- Regulator valve
- Solenoid switch valve
- Manual valve
- Converter clutch switch valve
- Converter clutch control valve
- Torque converter regulator valve
- Low/Reverse switch valve

In addition, the valve body also contains the thermal valve, #2,3&4 check balls, the #5 (overdrive) check valve and the 2/4 accumulator assembly. (Refer to 21 - TRANSMISSION/TRANSAXLE/AUTOMATIC - 41TE/VALVE BODY - DISASSEMBLY)

OPERATION

NOTE: Refer to the Hydraulic Schematics for a visual aid in determining valve location, operation and design.

REGULATOR VALVE

The regulator valve controls hydraulic pressure in the transaxle. It receives unregulated pressure from the pump, which works against spring tension to maintain oil at specific pressures. A system of sleeves and ports allows the regulator valve to work at one of three predetermined pressure levels. Regulated oil pressure is also referred to as “line pressure.”

SOLENOID SWITCH VALVE

The solenoid switch valve controls line pressure from the LR/CC solenoid. In one position, it allows the low/reverse clutch to be pressurized. In the other, it directs line pressure to the converter control and converter clutch valves.

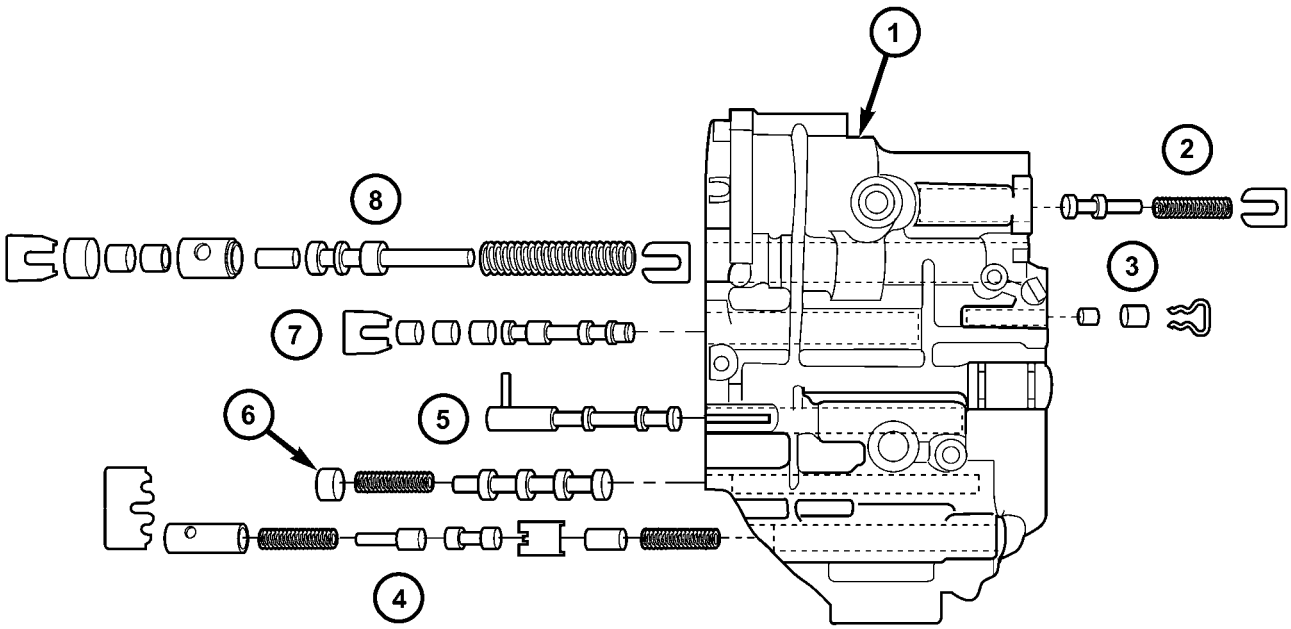

80865f21

Fig. 334 Valve Body Assembly

1 - VALVE BODY
2 - T/C REGULATOR VALVE
3 - L/R SWITCH VALVE
4 - CONVERTER CLUTCH CONTROL VALVE
5 - MANUAL VALVE
6 - CONVERTER CLUTCH SWITCH VALVE
7 - SOLENOID SWITCH VALVE
8 - REGULATOR VALVE

VALVE BODY (Continued)

MANUAL VALVE

The manual valve is operated by the mechanical shift linkage. Its primary responsibility is to send line pressure to the appropriate hydraulic circuits and solenoids. The valve has three operating ranges or positions.

CONVERTER CLUTCH SWITCH VALVE

The main responsibility of the converter clutch switch valve is to control hydraulic pressure applied to the front (off) side of the converter clutch piston. Line pressure from the regulator valve is fed to the torque converter regulator valve, where it passes through the valve, and is slightly regulated. The pressure is then directed to the converter clutch switch valve and to the front side of the converter clutch piston. This pressure pushes the piston back and disengages the converter clutch.

CONVERTER CLUTCH CONTROL VALVE

The converter clutch control valve controls the back (on) side of the torque converter clutch. When the PCM/TCM energizes or modulates the LR/CC solenoid to apply the converter clutch piston, both the converter clutch control valve and the converter control valve move, allowing pressure to be applied to the back side of the clutch.

T/C REGULATOR VALVE

The torque converter regulator valve slightly regulates the flow of fluid to the torque converter.

LOW/REVERSE SWITCH VALVE

The low/reverse clutch is applied from different sources, depending on whether low (1st) gear or reverse is selected. The low/reverse switch valve alternates positions depending on from which direction fluid pressure is applied. By design, when the valve is shifted by fluid pressure from one channel, the opposing channel is blocked. The switch valve alienates the possibility of a sticking ball check, thus providing consistent application of the low/reverse clutch under all operating conditions.

REMOVAL

NOTE: If valve body is replaced or reconditioned, the “Quick-Learn” Procedure must be performed. (Refer to 8 - ELECTRICAL/ELECTRONIC CONTROL MODULES/TRANSMISSION CONTROL MODULE - STANDARD PROCEDURE)

(1) Disconnect battery negative cable.
(2) Disconnect gearshift cable from manual valve lever.
(3) Remove manual valve lever from manual shaft.
(4) Raise vehicle on hoist.
(5) Remove oil pan bolts (Fig. 335).

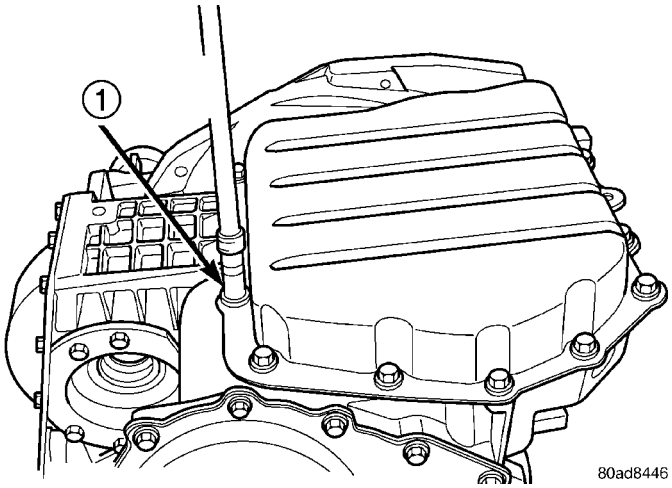

Fig. 335 Oil Pan Bolts

1 - OIL PAN BOLTS (USE RTV UNDER BOLT HEADS)

(6) Remove oil pan (Fig. 336).

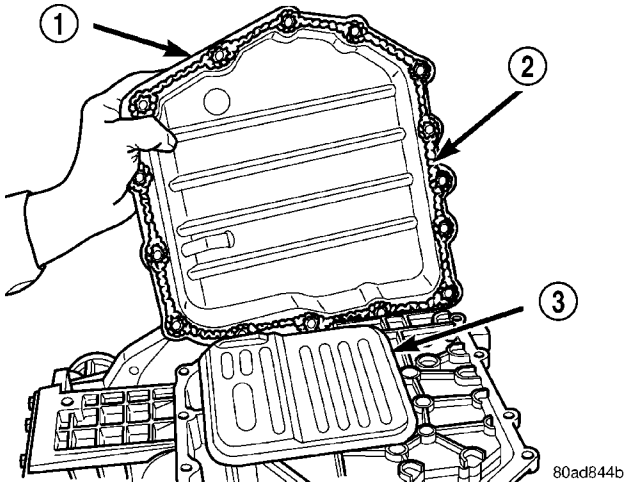

Fig. 336 Oil Pan

1 - OIL PAN
2 - 1/8 INCH BEAD OF RTV SEALANT
3 - OIL FILTER

VALVE BODY (Continued)

(7) Remove oil filter (Fig. 337).

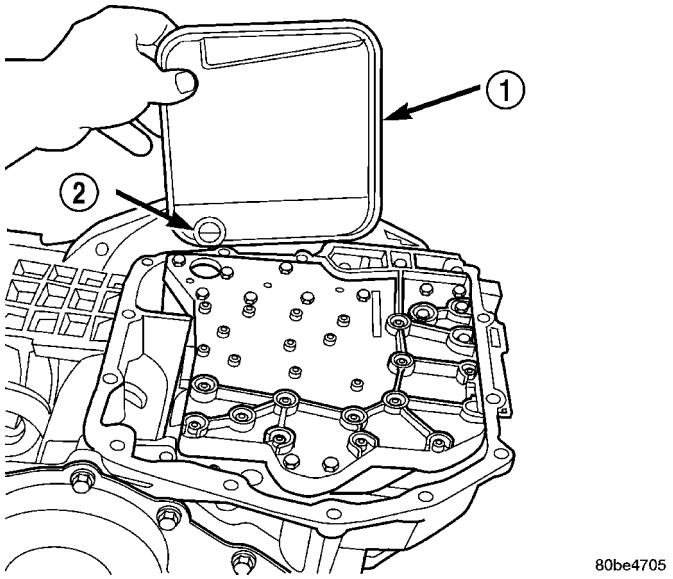

Fig. 337 Oil Filter

1 - OIL FILTER
2 - O-RING

(8) Remove the valve body-to-transaxle case bolts (Fig. 338).

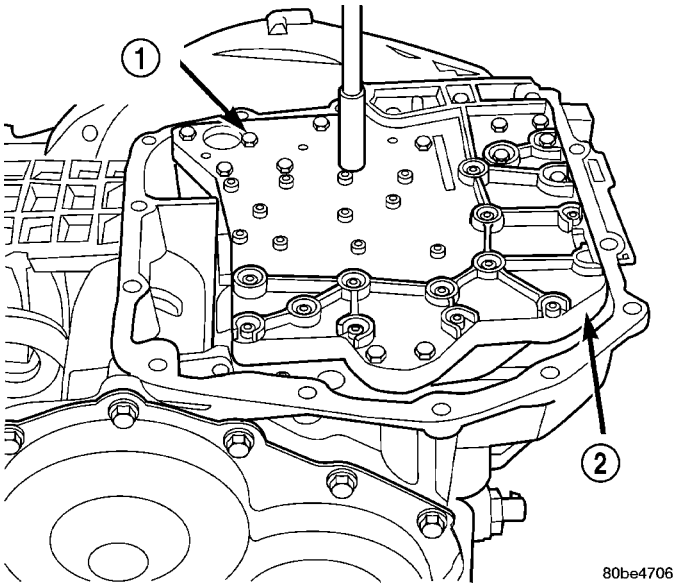

Fig. 338 Valve Body Attaching Bolts

1 - VALVE BODY ATTACHING BOLTS (18)
2 - VALVE BODY

NOTE: To ease removal of the valve body, turn the manual valve lever fully clockwise to low or first gear.

(9) Remove park rod rollers from guide bracket and remove valve body from transaxle (Fig. 339) (Fig. 340).

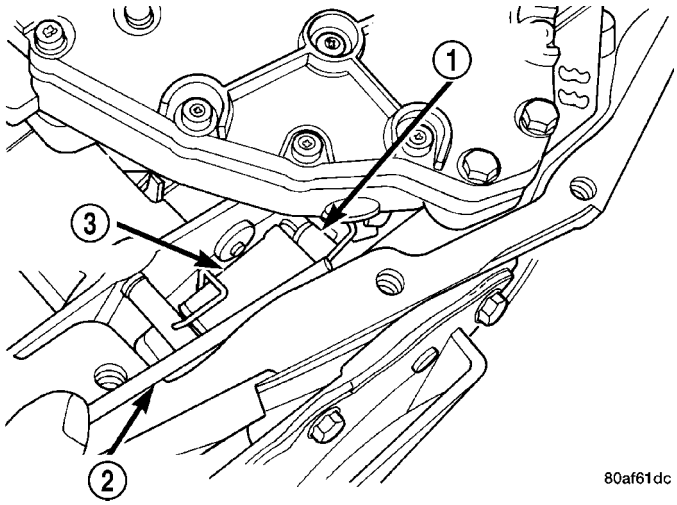

Fig. 339 Push Park Rod Rollers from Guide Bracket

1 - PARK SPRAG ROLLERS
2 - SCREWDRIVER
3 - PARK SPRAG GUIDE BRACKET

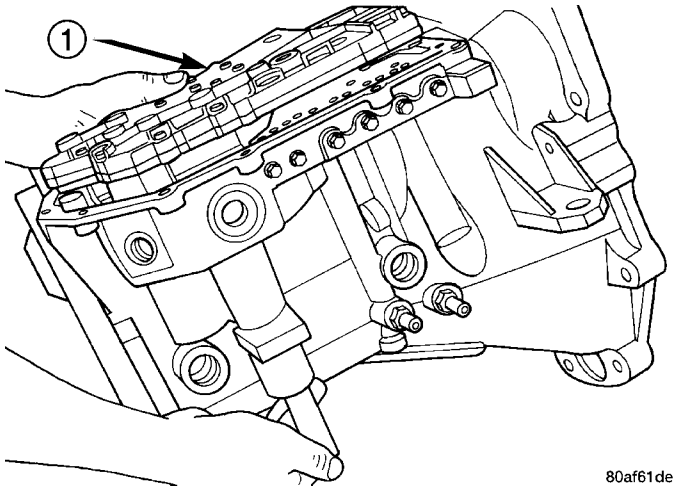

Fig. 340 Valve Body Removal/Installation

1 - VALVE BODY

CAUTION: The valve body manual shaft pilot may distort and bind the manual valve if the valve body is mishandled or dropped.

VALVE BODY (Continued)

DISASSEMBLY

NOTE: If valve body assembly is being reconditioned, the PCM/TCM Quick Learn Procedure must be performed. (Refer to 8 - ELECTRICAL/ELECTRONIC CONTROL MODULES/TRANSMISSION CONTROL MODULE - STANDARD PROCEDURE)

(1) Remove manual shaft seal (Fig. 341).

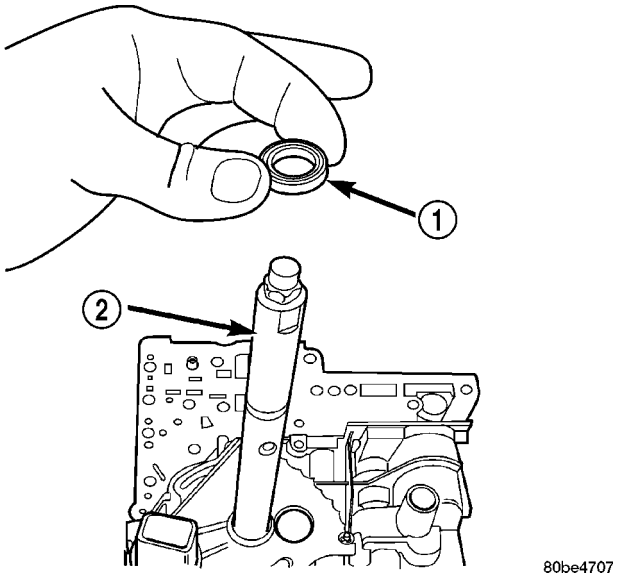

Fig. 341 Manual Shaft Seal

1 - SEAL
2 - MANUAL SHAFT

(2) Remove Transmission Range Sensor retaining screw (Fig. 342).

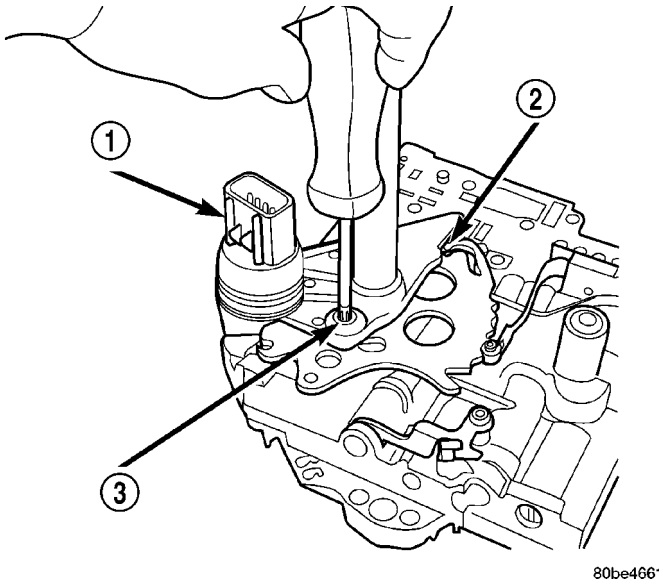

Fig. 342 Remove Transmission Range Sensor

1 - TRANSMISSION RANGE SENSOR
2 - MANUAL VALVE CONTROL PIN
3 - RETAINING SCREW

(3) Remove Manual Shaft/Rooster Comb and Transmission Range Sensor (Fig. 343).

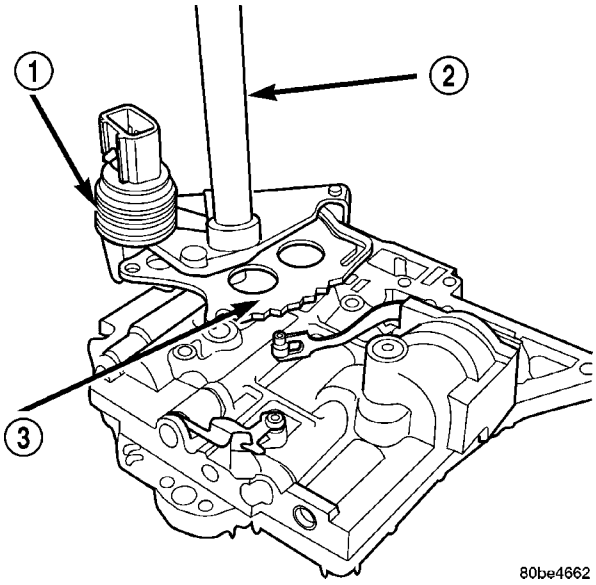

Fig. 343 Manual Shaft/Rooster Comb and Transmission Range Sensor

1 - TRANSMISSION RANGE SENSOR
2 - MANUAL SHAFT
3 - ROOSTER COMB

(4) Remove 2/4 Accumulator Retaining Plate (Fig. 344).

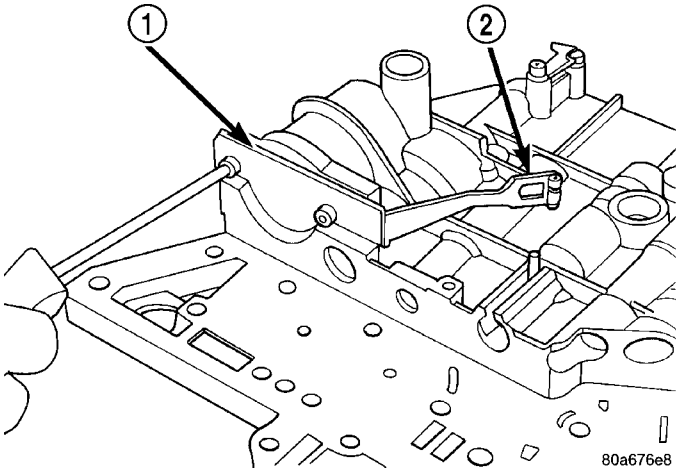

Fig. 344 2/4 Accumulator Retaining Plate

1 - 2–4 ACCUMULATOR RETAINING PLATE
2 - DETENT SPRING

VALVE BODY (Continued)

(5) Remove 2/4 Accumulator components as shown in (Fig. 345).

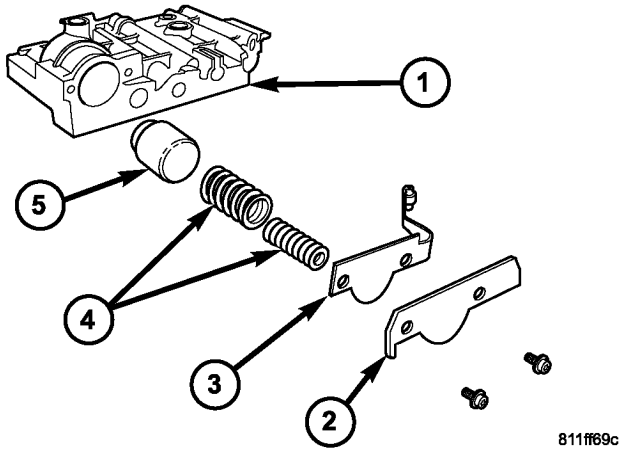

Fig. 345 2/4 Accumulator Assembly

1 - VALVE BODY
2 - RETAINER PLATE
3 - DETENT SPRING
4 - RETURN SPRINGS
5 - PISTON

(6) Remove Valve Body to Transfer Plate screws (Fig. 346).

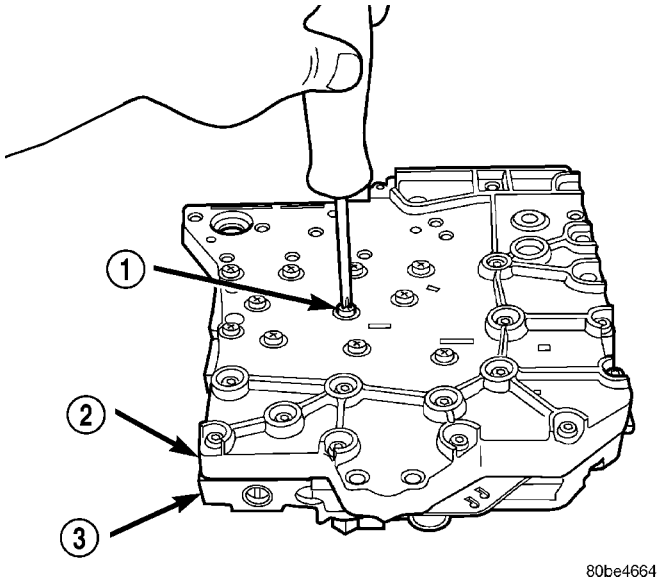

Fig. 346 Remove Valve Body to Transfer Plate Screws

1 - SCREW (24)
2 - TRANSFER PLATE
3 - VALVE BODY

(7) Invert assembly and remove Transfer Plate (Fig. 347). Beware of loose check balls.

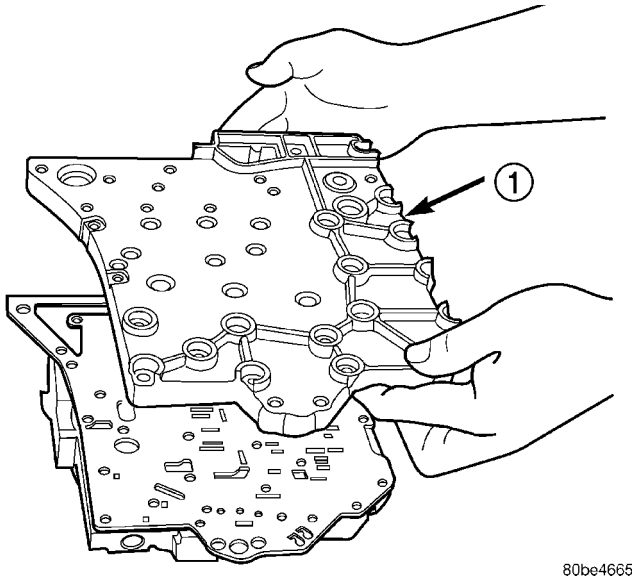

Fig. 347 Remove Transfer Plate

1 - TRANSFER PLATE

(8) Remove oil screen (Fig. 348).

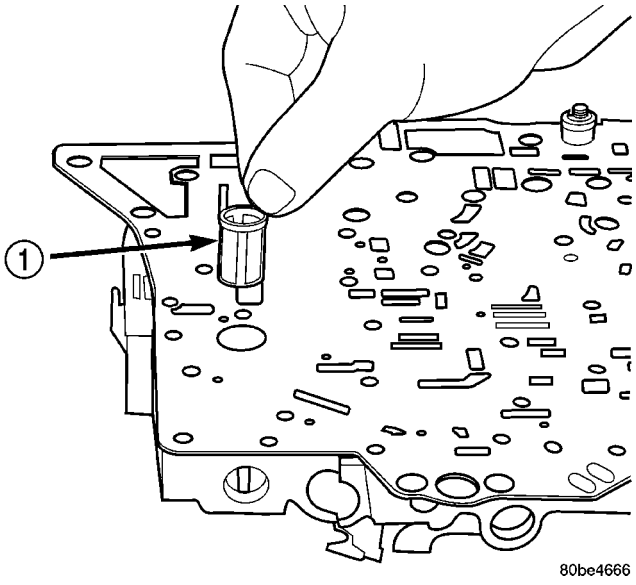

Fig. 348 Remove Oil Screen

1 - OIL SCREEN

VALVE BODY (Continued)

(9) Remove the overdrive clutch (#5) check valve (Fig. 349)

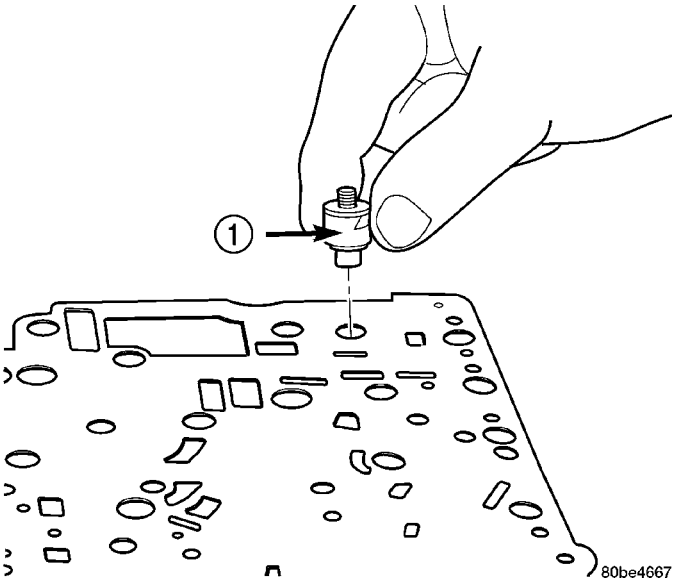

Fig. 349 Remove Overdrive Clutch (#5) Check Valve

1 - OVERDRIVE CLUTCH (#5) CHECK VALVE

(10) Remove separator plate (Fig. 350).

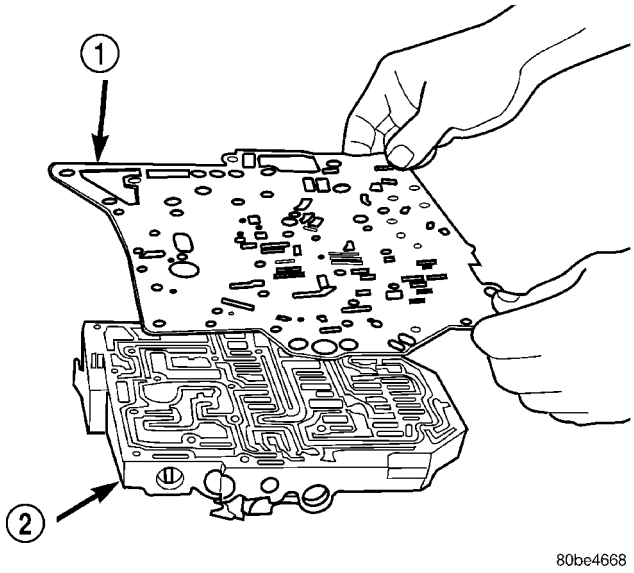

Fig. 350 Remove Separator Plate

1 - SEPARATOR PLATE
2 - VALVE BODY

(11) Remove thermal valve (Fig. 351).

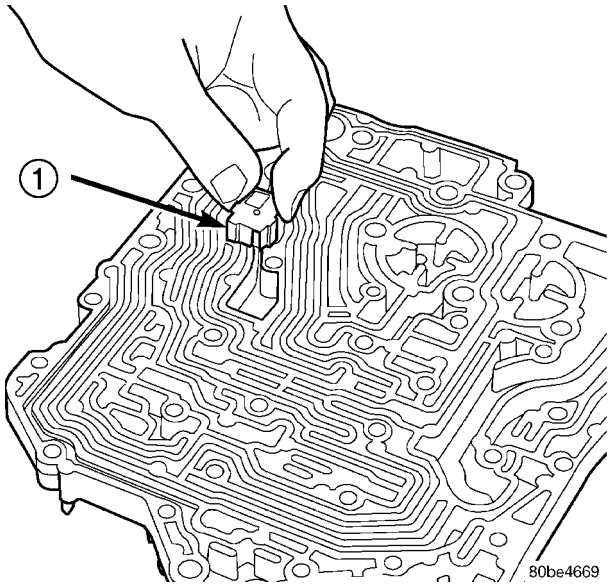

Fig. 351 Remove Thermal Valve

1 - THERMAL VALVE

(12) Remove check balls (Fig. 352).

NOTE: Tag all valve/spring assemblies for reassembly identification.

(13) Remove dual retainer plate using Tool 6301 (Fig. 353).

(14) Remove regulator valve spring retainer (Fig. 354).

VALVE BODY (Continued)

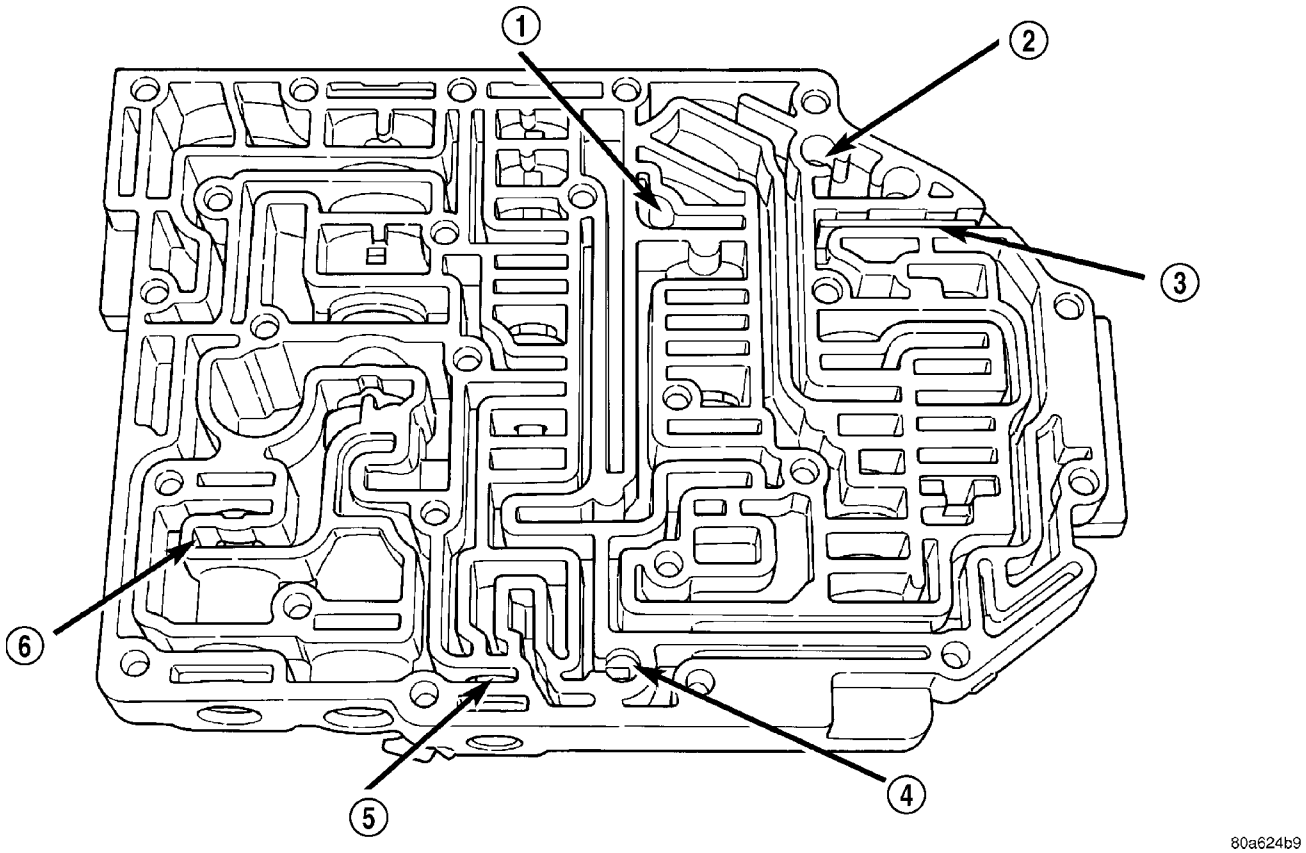

Fig. 352 Ball Check Location

1 - (#4) BALL CHECK LOCATION
2 - (#2) BALL CHECK LOCATION
3 - RETAINER
4 - (#3) BALL CHECK LOCATION
5 - LOW/REVERSE SWITCH VALVE
6 - T/C LIMIT VALVE

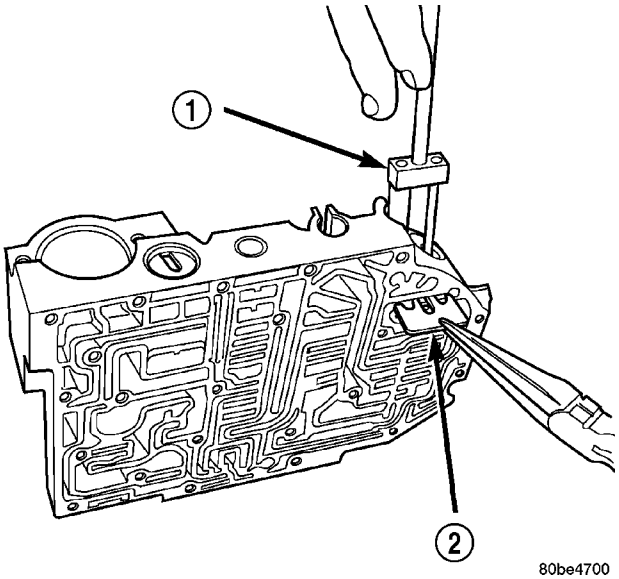

Fig. 353 Remove Dual Retainer Plate using Tool 6301

1 - TOOL 6301
2 - RETAINER

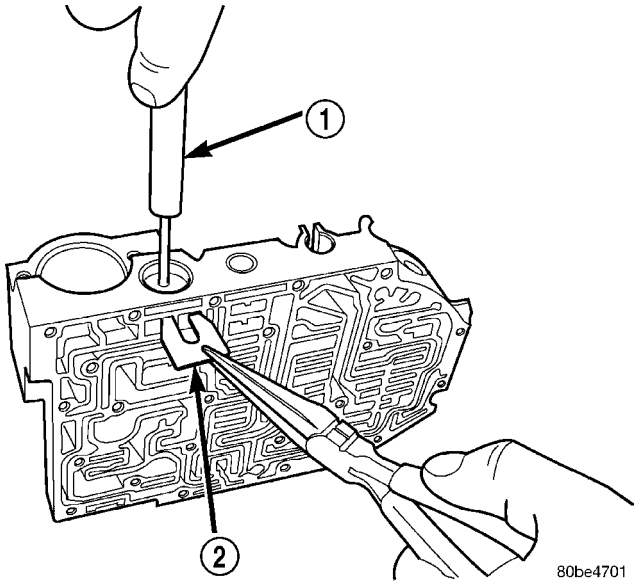

Fig. 354 Remove Regulator Valve Spring Retainer using Tool 6302

1 - TOOL 6302
2 - RETAINER

VALVE BODY (Continued)

(15) Remove remaining retainers as shown in (Fig. 355).

(16) Remove valves and springs as shown in (Fig. 356).

NOTE: Refer to Valve Body Cleaning and Inspection for cleaning procedures.

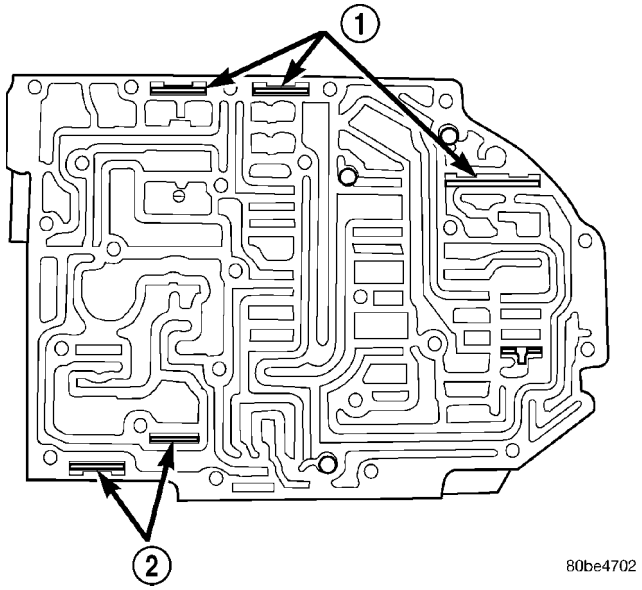

Fig. 355 Valve Retainer Location

1 - RETAINER
2 - RETAINER

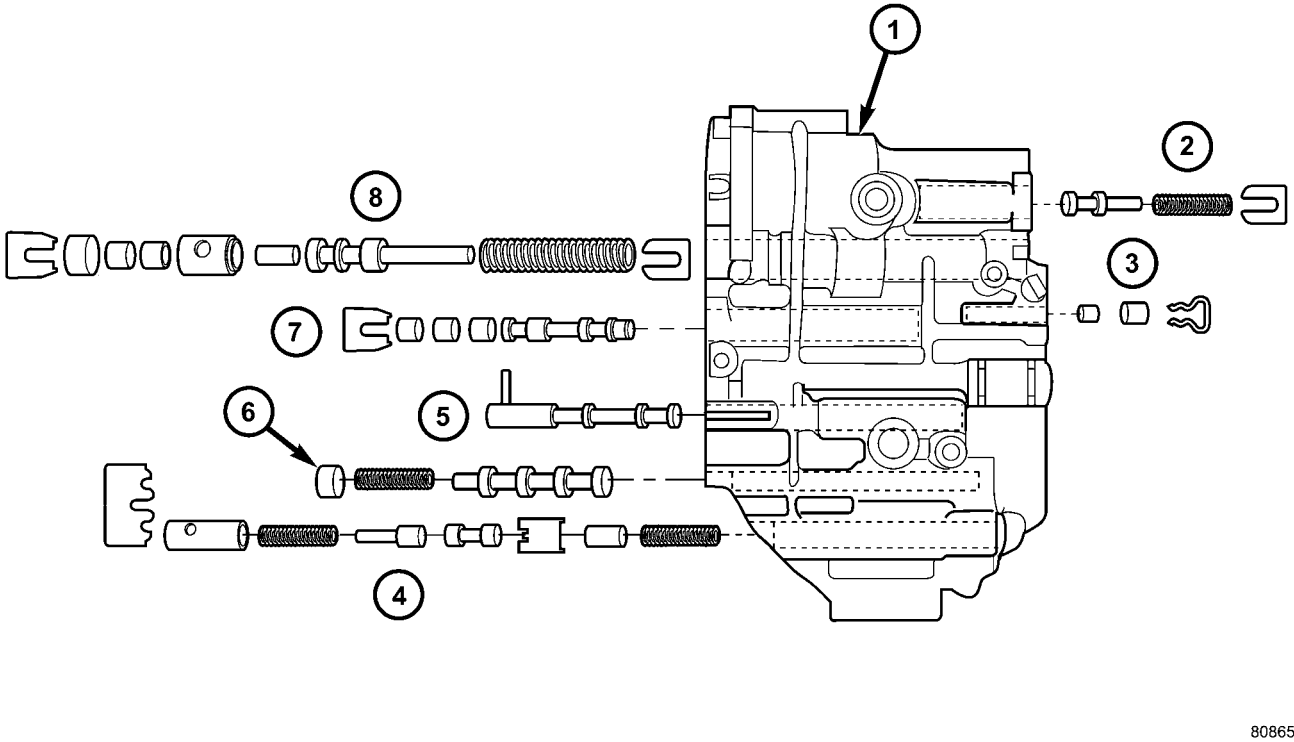

Fig. 356 Springs and Valves Location

1 - VALVE BODY
2 - T/C REGULATOR VALVE
3 - L/R SWITCH VALVE
4 - CONVERTER CLUTCH CONTROL VALVE
5 - MANUAL VALVE
6 - CONVERTER CLUTCH SWITCH VALVE
7 - SOLENOID SWITCH VALVE
8 - REGULATOR VALVE

VALVE BODY (Continued)

ASSEMBLY

NOTE: If valve body assembly is reconditioned, the PCM/TCM Quick Learn Procedure must be performed. (Refer to 8 - ELECTRICAL/ELECTRONIC CONTROL MODULES/TRANSMISSION CONTROL MODULE - STANDARD PROCEDURE)

(1) Install valves and springs as shown in (Fig. 356).

(2) Install regulator valve spring retainer (Fig. 357).

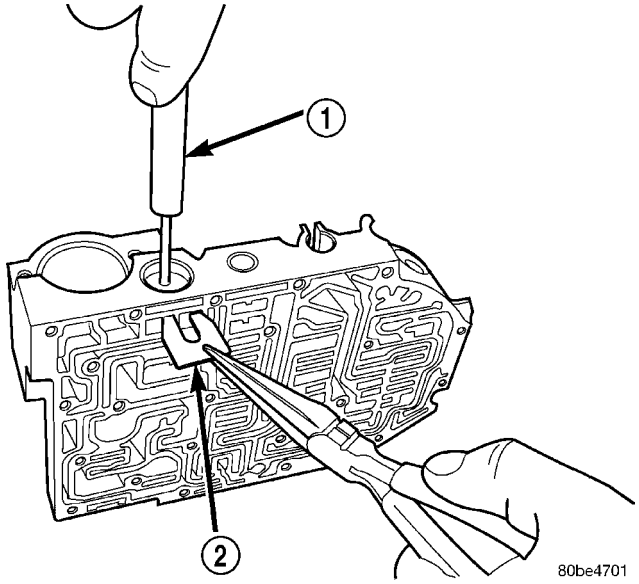

Fig. 357 Install Regulator Valve Spring Retainer using Tool 6302

1 - TOOL 6302
2 - RETAINER

(3) Install dual retainer plate using Tool 6301 (Fig. 358).

(4) Verify that all retainers are installed as shown in (Fig. 359). Retainers should be flush or below valve body surface.

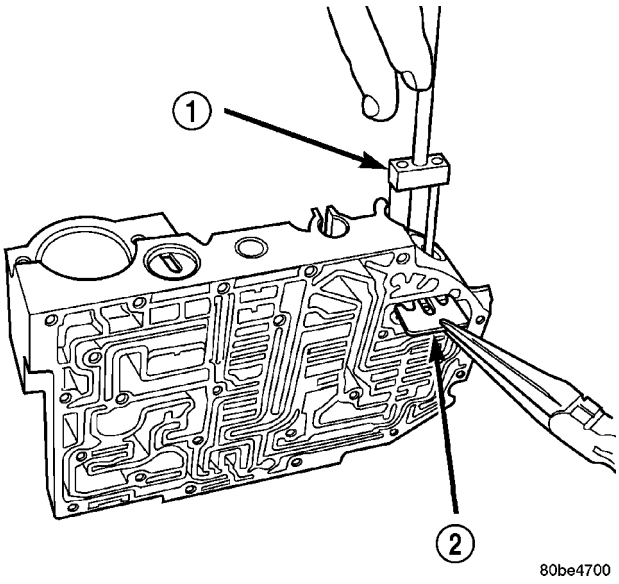

Fig. 358 Install Dual Retainer Plate using Tool 6301

1 - TOOL 6301
2 - RETAINER

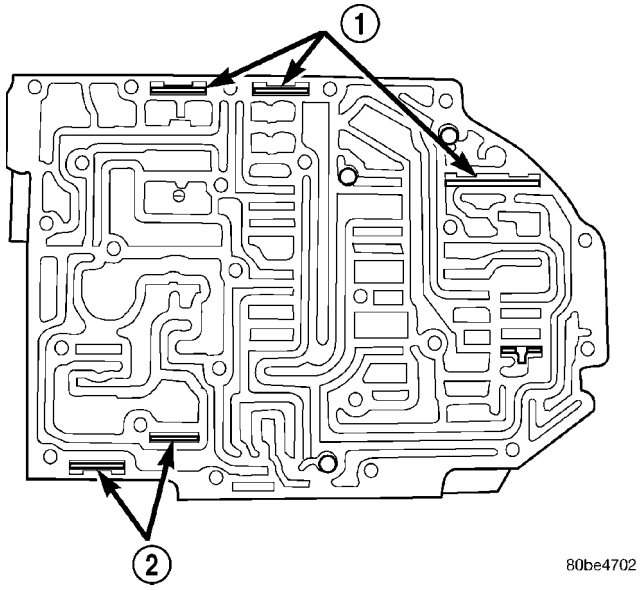

Fig. 359 Valve Retainer Location

1 - RETAINER
2 - RETAINER

VALVE BODY (Continued)

(5) Install check balls into position as shown in (Fig. 360). If necessary, secure them with petrolatum or transmission assembly gel for assembly ease.

(6) Install thermal valve into transfer plate (Fig. 361).

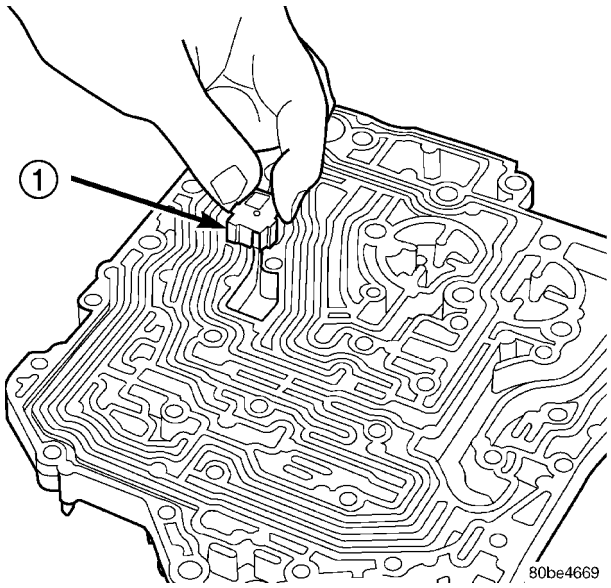

Fig. 361 Install Thermal Valve

1 - THERMAL VALVE

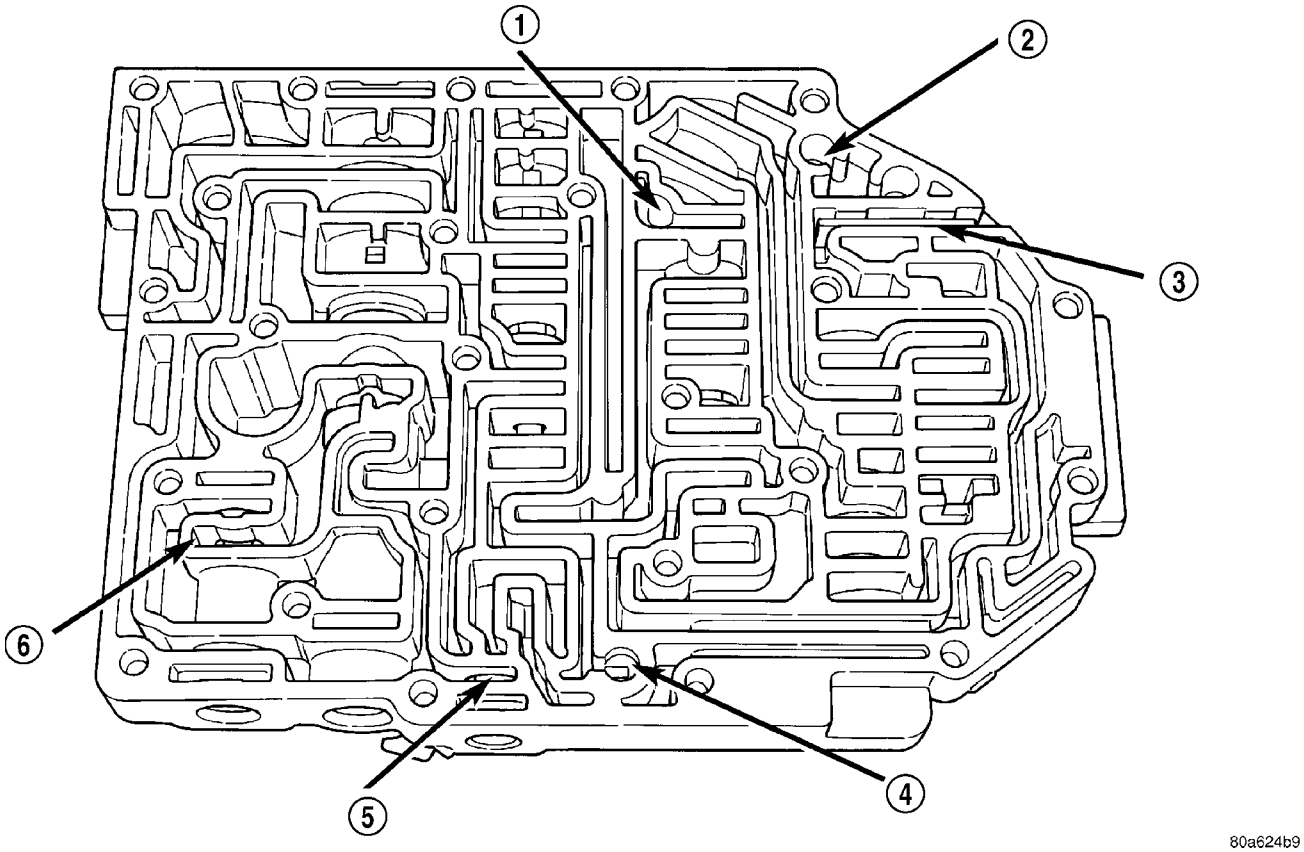

Fig. 360 Ball Check Location

1 - (#4) BALL CHECK LOCATION
2 - (#2) BALL CHECK LOCATION
3 - RETAINER
4 - (#3) BALL CHECK LOCATION
5 - LOW/REVERSE SWITCH VALVE
6 - T/C LIMIT VALVE

VALVE BODY (Continued)

(7) Install separator plate to valve body (Fig. 362).

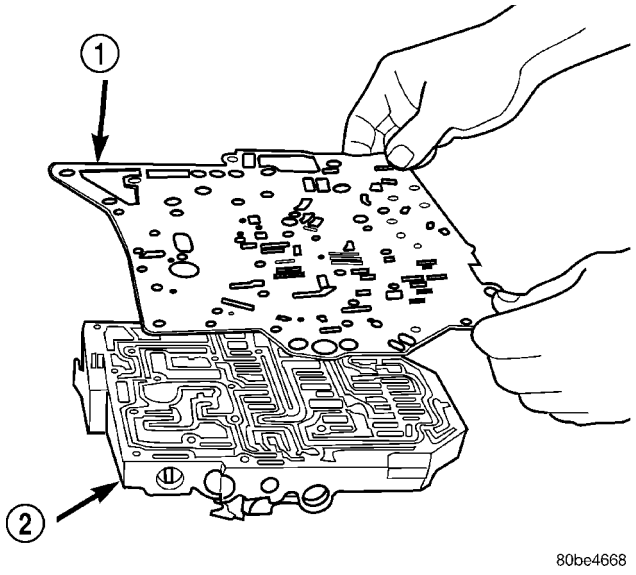

Fig. 362 Install Separator Plate

1 - SEPARATOR PLATE
2 - VALVE BODY

(8) Install the overdrive clutch (#5) check valve to separator plate (Fig. 363)

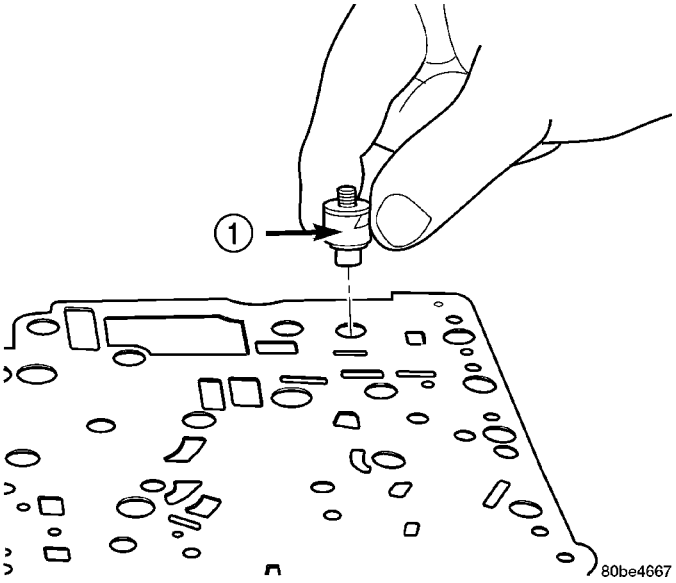

Fig. 363 Install Overdrive Clutch (#5) Check Valve

1 - OVERDRIVE CLUTCH (#5) CHECK VALVE

(9) Install oil screen to separator plate (Fig. 364).

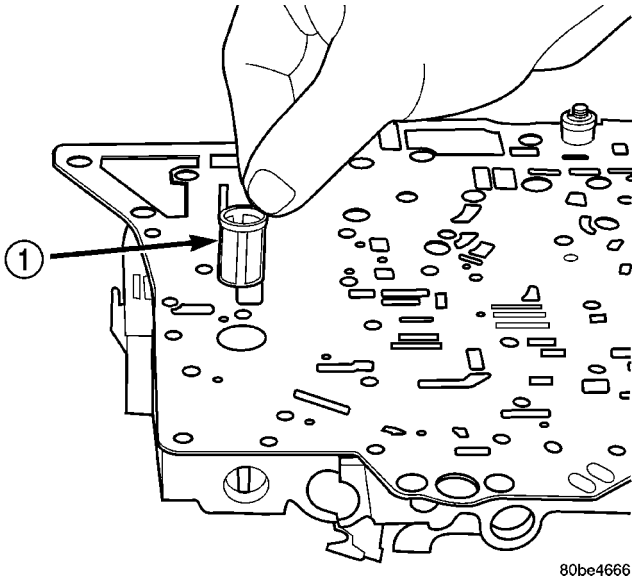

Fig. 364 Install Oil Screen

1 - OIL SCREEN

(10) Install transfer plate to valve body and separator plate. Make sure oil screen and #5 check valve do not bind (Fig. 365).

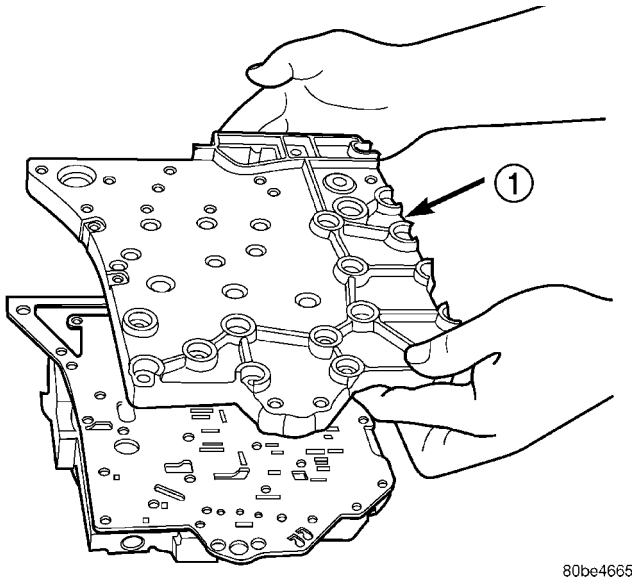

Fig. 365 Install Transfer Plate

1 - TRANSFER PLATE

VALVE BODY (Continued)

(11) Install twenty-four transfer plate to valve body screws (Fig. 366) and torque to 5 N·m (45 in. lbs.).

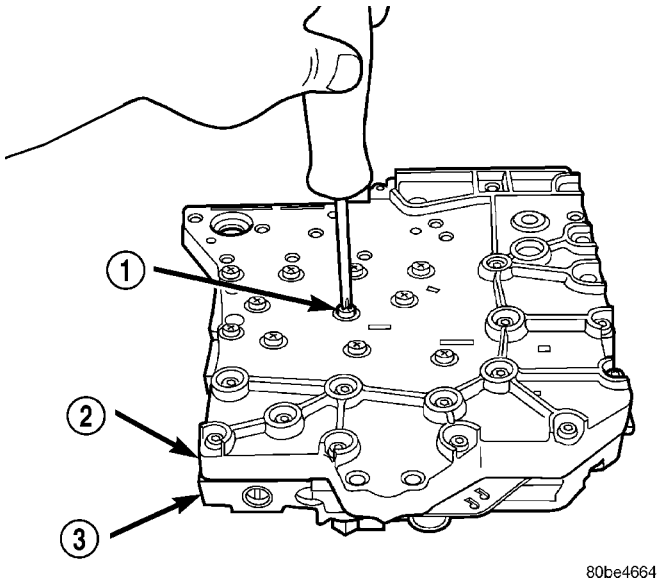

Fig. 366 Install Valve Body to Transfer Plate Screws

1 - SCREW (24)
2 - TRANSFER PLATE
3 - VALVE BODY

(12) Install 2/4 Accumulator components as shown in (Fig. 367).

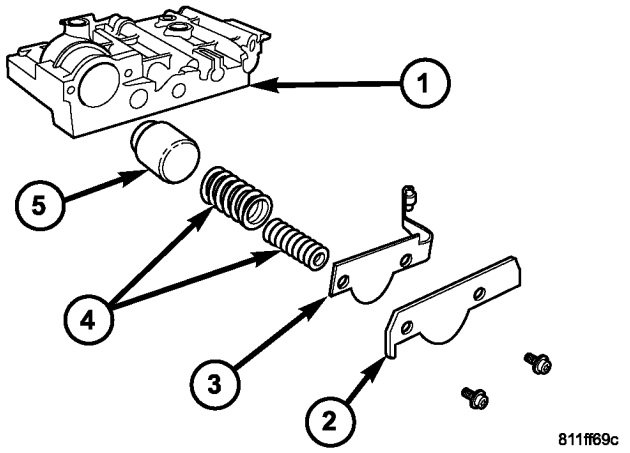

Fig. 367 2/4 Accumulator Assembly

1 - VALVE BODY
2 - RETAINER PLATE
3 - DETENT SPRING
4 - RETURN SPRINGS
5 - PISTON

(13) Torque 2/4 Accumulator retainer to 5 N·m (45 in. lbs.) (Fig. 368).

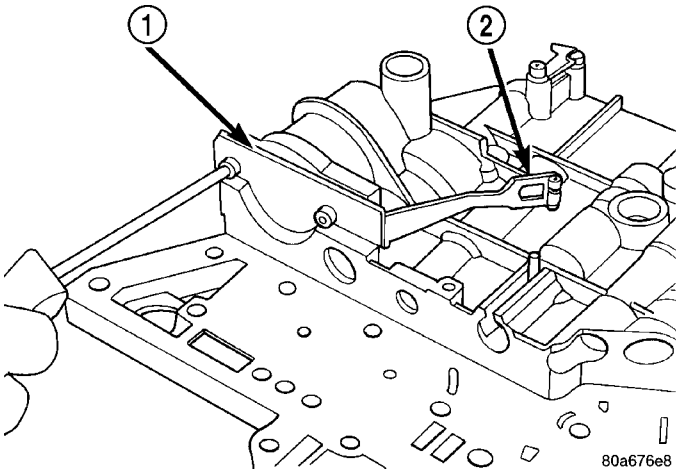

Fig. 368 2/4 Accumulator Retaining Plate

1 - 2–4 ACCUMULATOR RETAINING PLATE
2 - DETENT SPRING

(14) Install Manual Shaft/Rooster Comb and Transmission Range Sensor (Fig. 369).

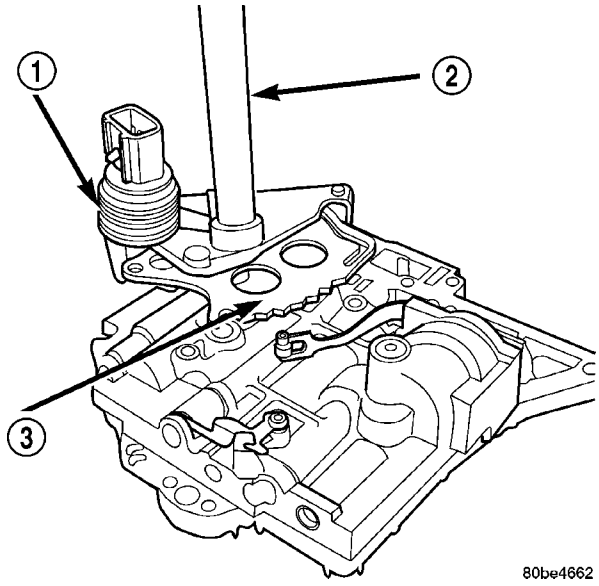

Fig. 369 Install Manual Shaft/Rooster Comb and Transmission Range Sensor

1 - TRANSMISSION RANGE SENSOR
2 - MANUAL SHAFT
3 - ROOSTER COMB

VALVE BODY (Continued)

(15) Make sure Manual Valve control pin is contained within the rooster comb slot (Fig. 370). Install Transmission Range Sensor retaining screw (Fig. 370) and torque to 5 N·m (45 in. lbs.).

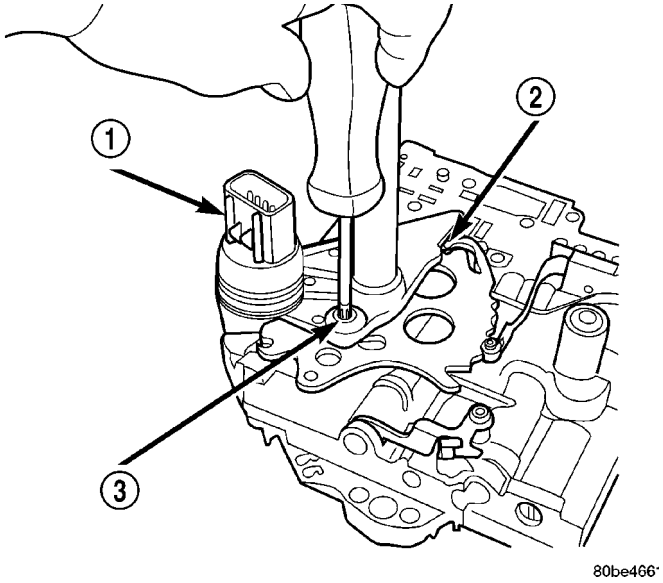

Fig. 370 Install Transmission Range Sensor Retaining Screw

1 - TRANSMISSION RANGE SENSOR
2 - MANUAL VALVE CONTROL PIN
3 - RETAINING SCREW

(16) Install manual shaft seal (Fig. 371).

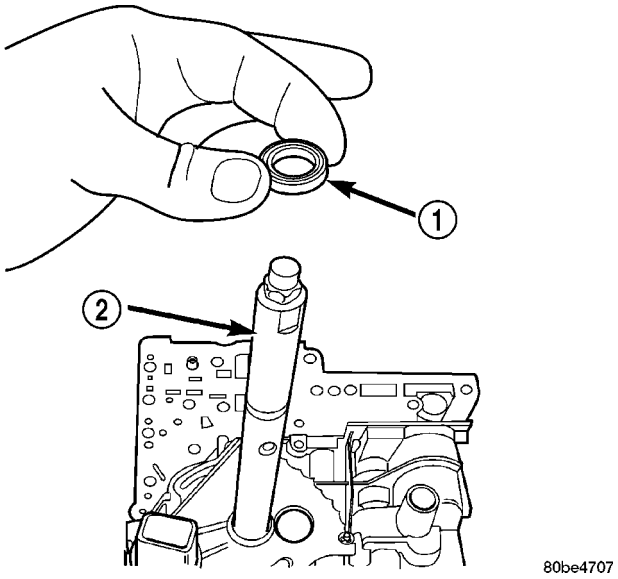

Fig. 371 Manual Shaft Seal

1 - SEAL
2 - MANUAL SHAFT

INSTALLATION

NOTE: If valve body assembly is being replaced or reconditioned, the "Quick-Learn" procedure must be performed. (Refer to 8 - ELECTRICAL/ELECTRONIC CONTROL MODULES/TRANSMISSION CONTROL MODULE - STANDARD PROCEDURE)

(1) Install valve body assembly to transaxle (Fig. 372). Install and torque valve body-to-transaxle case bolts (Fig. 373) to 12 N·m (105 in. lbs.).

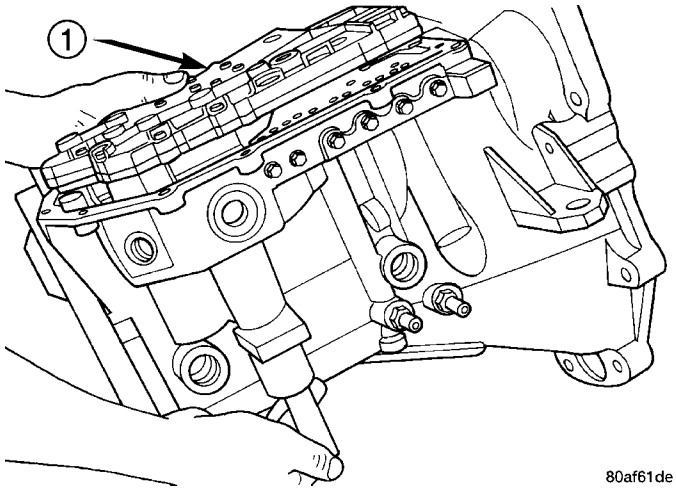

Fig. 372 Valve Body Removal/Installation

1 - VALVE BODY

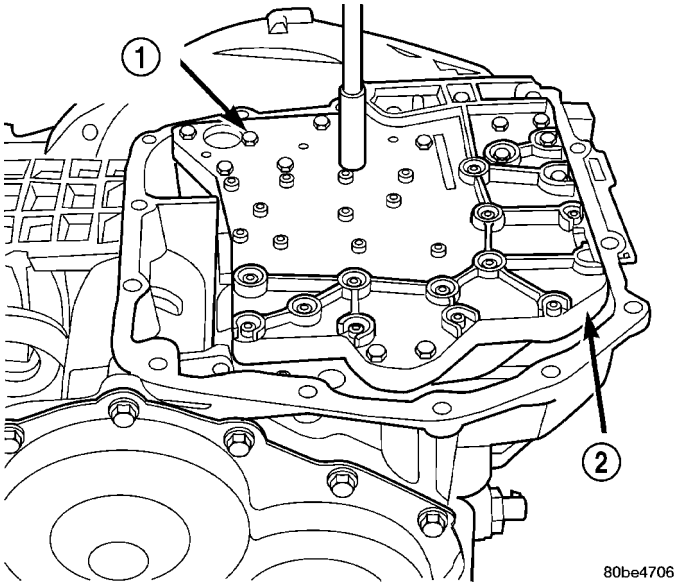

Fig. 373 Valve Body Attaching Bolts

1 - VALVE BODY ATTACHING BOLTS (18)
2 - VALVE BODY

VALVE BODY (Continued)

(2) Install transaxle oil filter (Fig. 374). Inspect the o-ring and replace if necessary.

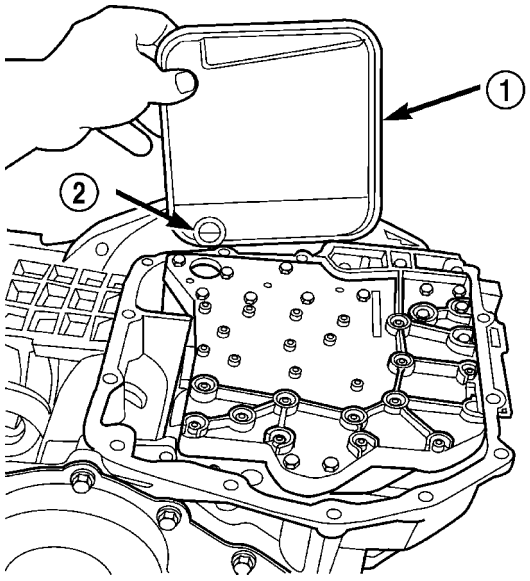

Fig. 374 Oil Filter

1 - OIL FILTER
2 - O-RING

(3) Ensure the transaxle oil pan and transaxle case sealing surfaces are clean and dry. Install an 1/8” bead of Mopar® Silicone Rubber Adhesive Sealant to the oil pan and install (Fig. 375). Torque oil pan-to-transaxle case bolts (Fig. 376) to 19 N·m (165 in. lbs.).

(4) Lower vehicle.

(5) Connect transmission range sensor connector.

(6) Install manual valve lever to manual shaft.

(7) Install gearshift cable to manual valve lever.

(8) Connect battery negative cable.

(9) Fill transaxle with Mopar® ATF +4 Transmission fluid. (Refer to 21 - TRANSMISSION/TRANSAXLE/AUTOMATIC - 41TE/FLUID - STANDARD PROCEDURE)

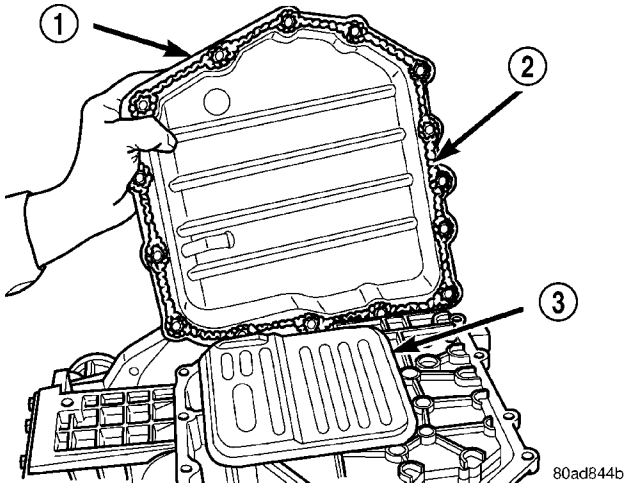

Fig. 375 Oil Pan

1 - OIL PAN
2 - 1/8 INCH BEAD OF RTV SEALANT
3 - OIL FILTER

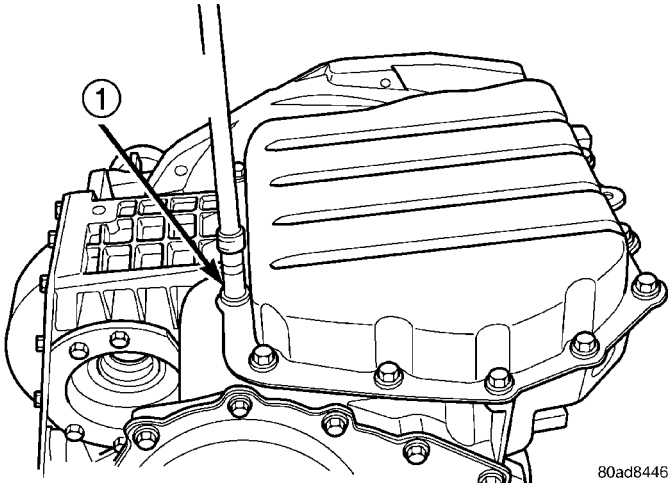

Fig. 376 Oil Pan Bolts

1 - OIL PAN BOLTS (USE RTV UNDER BOLT HEADS)

TIRES/WHEELS

TABLE OF CONTENTS

page

TIRES/WHEELS
DIAGNOSIS AND TESTING - TIRE AND WHEEL VIBRATION 1
STANDARD PROCEDURE
STANDARD PROCEDURE - TIRE AND WHEEL BALANCE 5
STANDARD PROCEDURE - TIRE AND WHEEL MATCH MOUNTING 7
STANDARD PROCEDURE - TIRE AND WHEEL ROTATION 7
REMOVAL
REMOVAL - TIRE AND WHEEL ASSEMBLY (ALUMINUM WHEEL) 8
REMOVAL - TIRE AND WHEEL ASSEMBLY (STEEL WHEEL) 8
INSTALLATION
INSTALLATION - TIRE AND WHEEL ASSEMBLY (ALUMINUM WHEEL) 8
INSTALLATION - TIRE AND WHEEL ASSEMBLY (STEEL WHEEL) 8
TIRE PRESSURE MONITORING
DESCRIPTION 9
OPERATION 10
SENSOR - TPM
DESCRIPTION 10
OPERATION 10
CAUTION 11
DIAGNOSIS AND TESTING - TIRE PRESSURE SENSOR 11
REMOVAL 11
INSTALLATION 11
TIRES
DESCRIPTION
DESCRIPTION - TIRE 13
DESCRIPTION - RADIAL-PLY TIRES 13
DESCRIPTION - REPLACEMENT TIRES 14
DESCRIPTION - SPARE TIRE (TEMPORARY) 14
DIAGNOSIS AND TESTING
DIAGNOSIS AND TESTING - TIRE NOISE . . . 14
DIAGNOSIS AND TESTING - TIRE/VEHICLE LEAD 14
DIAGNOSIS AND TESTING - TIRE WEAR PATTERNS 16
DIAGNOSIS AND TESTING - TREAD WEAR INDICATORS 16
STANDARD PROCEDURE
STANDARD PROCEDURE - TIRE INFLATION PRESSURES 16
STANDARD PROCEDURE - TIRE PRESSURE FOR HIGH SPEED OPERATION 17
STANDARD PROCEDURE - TIRE LEAK REPAIRING 17
CLEANING - TIRES 18
WHEELS
DESCRIPTION - WHEEL 18
DIAGNOSIS AND TESTING - WHEEL INSPECTION 19
CLEANING
WHEEL AND WHEEL TRIM CARE 19
SPECIFICATIONS
WHEEL 19
WHEEL COVER
DESCRIPTION 19
REMOVAL 19
INSTALLATION 20
WHEEL MOUNTING STUDS - FRONT
REMOVAL 21
INSTALLATION 21
WHEEL MOUNTING STUDS - REAR
REMOVAL 22
INSTALLATION 22

TIRES/WHEELS

DIAGNOSIS AND TESTING - TIRE AND WHEEL VIBRATION

Tire and wheel imbalance, runout and force variation can cause vehicles to exhibit steering wheel vibration.

VISUAL INSPECTION

Visual inspection of the vehicle is recommended prior to road testing or performing any other procedure. Raise vehicle on a suitable hoist. (Refer to LUBRICATION & MAINTENANCE/HOISTING - STANDARD PROCEDURE)

Inspect for the following:

- Verify correct (OEM) wheel and tire, as well as correct wheel weights. Aluminum wheels require

unique wheel weights. They are designed to fit the contour of the wheel (Fig. 1).

- Inspect tires and wheels for damage, mud packing and unusual wear; correct as necessary.
- Check and adjust tire air pressure to the pressure listed on the label attached to the rear face of the driver's door.

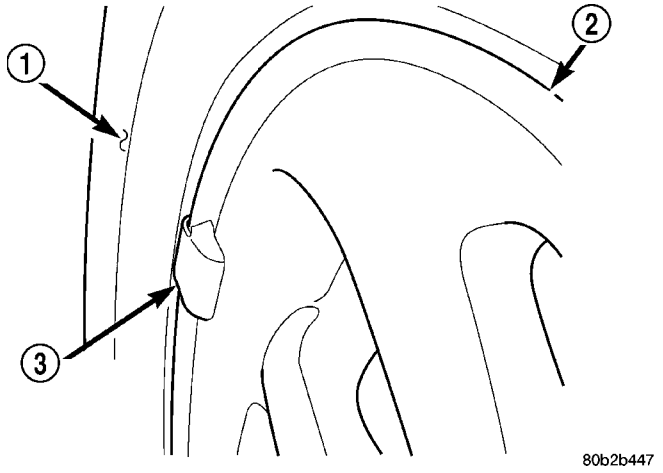

Fig. 1 Aluminum Wheel Weight

1 - TIRE
2 - WHEEL
3 - WHEEL WEIGHT

ROAD TEST

Road test vehicle on a smooth road for a least five miles to warm tires (remove any flat spots). Lightly place hands on steering wheel at the 10:00 and 2:00 positions while slowly sweeping up and down from 90 to 110 km/h (55 to 70 mph) where legal speed limits allow.

Observe the steering wheel for:

- Visual Nibble (oscillation: clockwise/counterclockwise, usually due to tire imbalance)
- Visual Buzziness (high frequency, rapid vibration up and down)

To rule out vibrations due to brakes or powertrain:

- Lightly apply brakes at speed; if vibration occurs or is enhanced, vibration is likely due to causes other than tire and wheel assemblies.
- Shift transmission into neutral while vibration is occurring; if vibration is eliminated, vibration is likely due to causes other than tire and wheel assemblies.

For brake vibrations, (Refer to 5 - BRAKES - BASE/HYDRAULIC/MECHANICAL/ROTORS - DIAGNOSIS AND TESTING).

For powertrain vibrations, (Refer to 3 - DIFFERENTIAL & DRIVELINE - DIAGNOSIS AND TESTING).

For tire and wheel assembly vibrations, continue with this diagnosis and testing procedure.

TIRE AND WHEEL BALANCE

(1) Balance the tire and wheel assemblies as necessary following the wheel balancer manufacturer's instructions and using the information listed in Standard Procedure - Tire And Wheel Balance. (Refer to 22 - TIRES/WHEELS - STANDARD PROCEDURE)

(2) Road test the vehicle for at least 5 miles, following the format described in Road Test.

(3) If the vibration persists, continue with this diagnosis and testing procedure.

TIRE AND WHEEL RUNOUT/MATCH MOUNTING

(1) **System Radial Runout.** This on-the-vehicle system check will measure the radial runout including the hub, wheel and tire.

(a) Raise vehicle so tires clear floor. (Refer to LUBRICATION & MAINTENANCE/HOISTING - STANDARD PROCEDURE)

(b) Apply masking tape around the circumference of the tire in the locations to be measured (Fig. 2). Do not overlap the tape.

(c) Check system runout using Dial Indicator Set, Special Tool C-3339A with 25-W wheel, or equivalent. Place the end of the indicator against each taped area (one at a time) (Fig. 2) and rotate the tire and wheel. System radial runout should not exceed 0.76 mm (0.030 inch) with no tread “dips” or “steps.” Tread “dips” and “steps” can be identified by spikes of the dial indicator gauge.

- Tread ″dips″; Rapid decrease then increase in dial indicator reading over 101.6 mm (4.0 inch) of tread circumference.
- Tread ″steps″; Rapid decrease or increase in dial indicator reading over 101.6 mm (4.0 inch) of tread circumference.

(d) If system runout is excessive, re-index the tire and wheel assembly on the hub. Remove assembly from vehicle and install it back on the hub two studs over from original mounting position. If re-indexing the tire and wheel assembly corrects or reduces system runout, check hub runout and repair as necessary (Refer to 5 - BRAKES - BASE/HYDRAULIC/MECHANICAL/ROTORS - DIAGNOSIS AND TESTING).

(e) If system runout is still excessive, continue with this diagnosis and testing procedure.

(2) **Tire and Wheel Assembly Radial Runout.** This radial runout check is performed with the tire and wheel assembly off the vehicle.

(a) Remove tire and wheel assembly from vehicle and install it on a suitable wheel balancer.

TIRES/WHEELS (Continued)

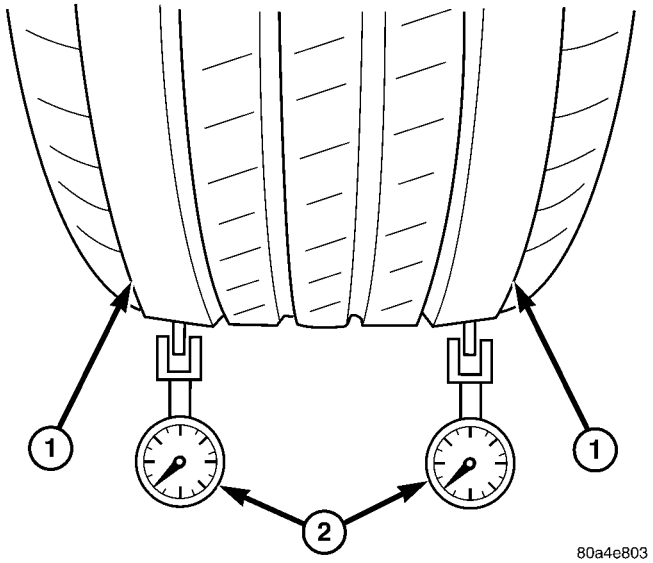

Fig. 2 Radial Runout Measurement

1 - MASKING TAPE
2 - DIAL INDICATOR

(b) Check system runout using Dial Indicator Set, Special Tool C-3339A with 25-W wheel, or equivalent. Place the end of the indicator against each taped area (one at a time) (Fig. 2) and rotate the tire and wheel. Radial runout should not exceed 0.76 mm (0.030 inch) with no tread “dips” or “steps.” Tread “dips” and “steps” can be identified by spikes of the dial indicator gauge.

(c) If runout exceeds limits, mark the original location of the tire on the wheel at the valve stem (Fig. 3). Also, mark the tire and wheel to indicate the original high spot of the assembly and record the runout measurement.

(d) If runout exceeds limits, the tire will need to be dismounted from the wheel to verify wheel vs. tire contribution. Refer to Wheel Runout below.

(3) **Lateral Runout.** Lateral runout for the vehicle system as well as the tire and wheel assembly should be less than 0.76 mm (0.030 inch). The same procedure and theory described for radial runout can also be applied to identify and reduce lateral runout.

(4) **Wheel Runout.** This runout check is performed as follows:

(a) Dismount the tire from the wheel.

(b) Mount the wheel back on the wheel balancer.

(c) Measure radial runout of the wheel at the tire bead seat (Fig. 4). Runout should not exceed 0.254 mm (0.010 inch) for aluminum wheels and 0.508 mm (.020 inch) for steel wheels. Replace the wheel if it exceeds the limit.

(d) Measure lateral runout of the wheel at the tire bead seat (Fig. 5). Runout should not exceed 0.762 mm (0.030 inch) for all wheels. Replace the wheel if it exceeds the limit.

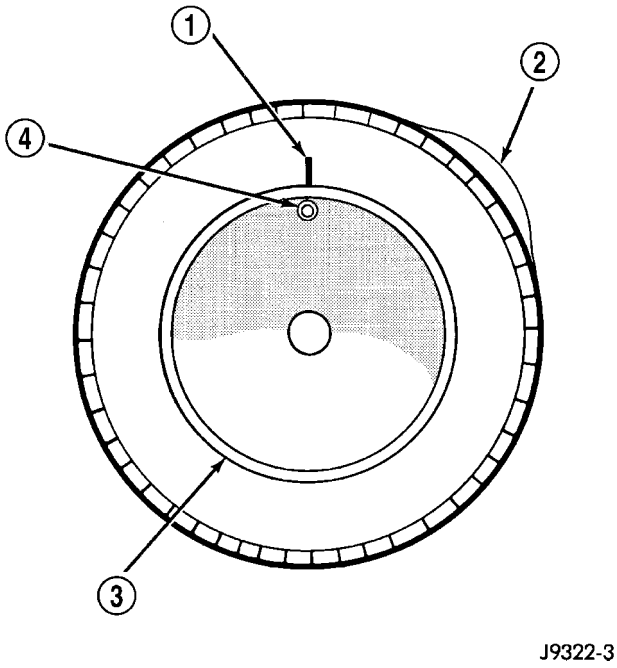

Fig. 3 Marking Tire

1 - REFERENCE MARK
2 - EXAMPLE HIGH SPOT ON TIRE
3 - WHEEL
4 - VALVE STEM

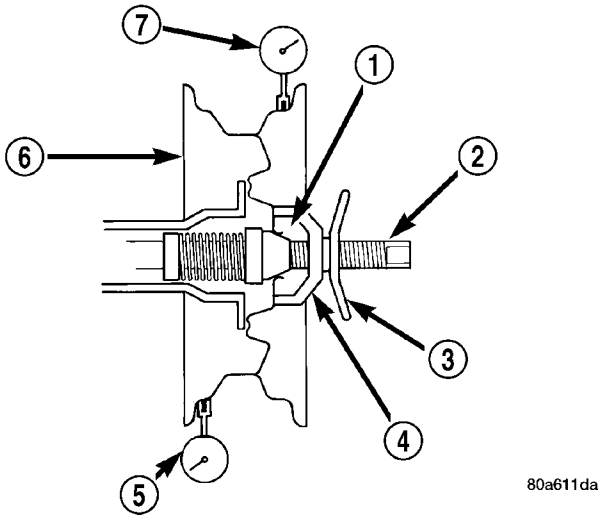

Fig. 4 Checking Radial Runout Of Wheel

1 - MOUNTING CONE
2 - SPINDLE SHAFT
3 - WING NUT
4 - PLASTIC CUP
5 - DIAL INDICATOR
6 - WHEEL
7 - DIAL INDICATOR

TIRES/WHEELS (Continued)

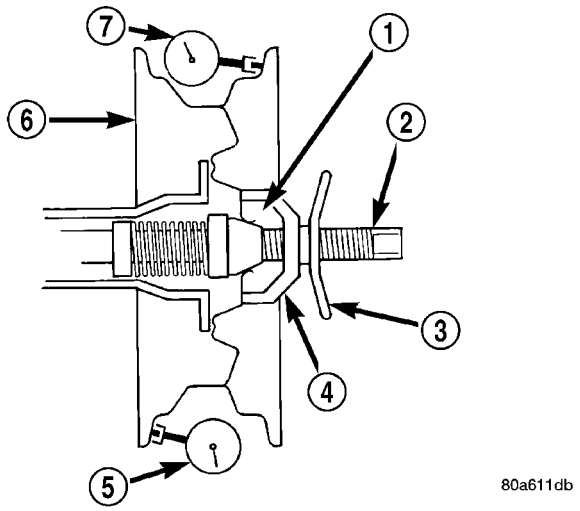

Fig. 5 Checking Lateral Runout Of Wheel

1 - MOUNTING CONE
2 - SPINDLE SHAFT
3 - WING NUT
4 - PLASTIC CUP
5 - DIAL INDICATOR
6 - WHEEL
7 - DIAL INDICATOR

(5) **Match Mounting.** If the wheel runout is within specifications, tire and wheel assembly runout can be improved by re-indexing (match mounting) the tire to the wheel as described below.

(a) Remount the tire on the rim 180 degrees from its original location (Fig. 6). Ensure the tire bead is properly seated.

(b) Re-measure the total runout. Mark the tire at the high spot and record the measurement.

If runout is still excessive, perform the following:

- If the new high spot is within 102 mm (4.0 inch) of the first high spot on the tire, replace the tire.
- If the new high spot is within 102 mm (4.0 inch) of the first high spot on the wheel, the wheel may be out of specification. Refer to Wheel Runout above.
- If the new high spot is NOT within 102 mm (4.0 inch) of either high spot, draw an arrow on the tread from new high spot toward the original (Fig. 7). Break down the tire and remount it 90 degrees on rim in that direction, then re-measure runout. This will normally reduce the runout to an acceptable amount.

(6) Once back together, road test the vehicle for at least 5 miles, following the format described in Road Test. If vibration persists, and all components tested are within specification, the tires may have an excessive radial force condition. Radial force variation can only be checked as indicated below. If this equipment is not available, consult with the tire manufacturer.

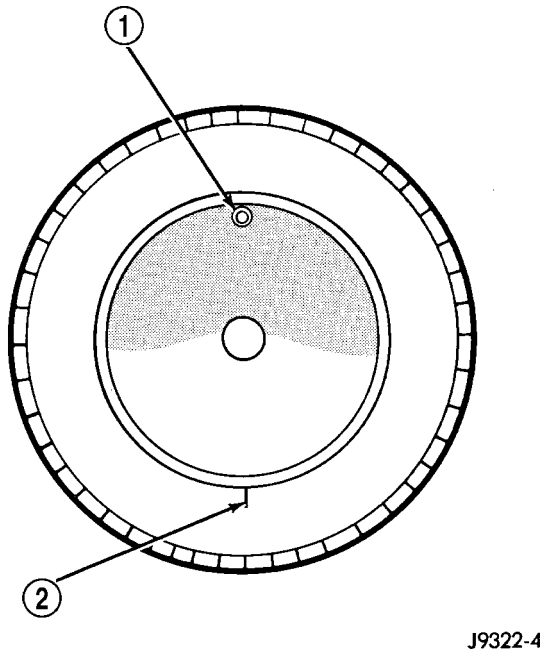

Fig. 6 Remount Tire 180 Degrees

1 - VALVE STEM
2 - REFERENCE MARK

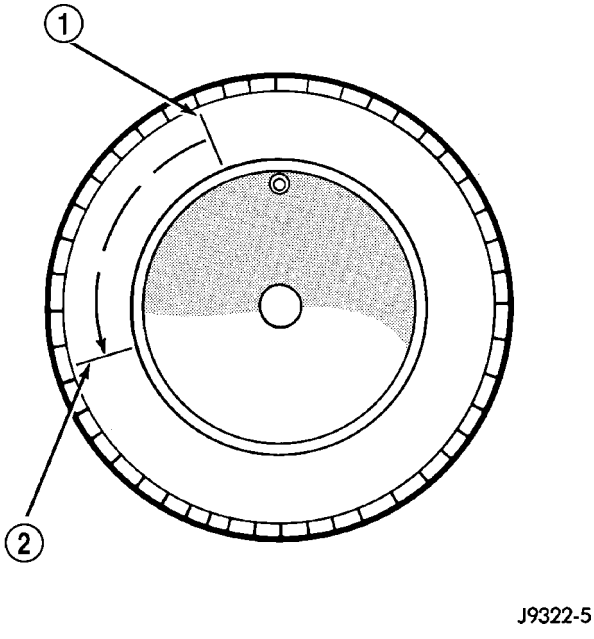

Fig. 7 Remount Tire 90 Degrees In Direction of Arrow

1 - 2ND HIGH SPOT ON TIRE
2 - 1ST HIGH SPOT ON TIRE

TIRES/WHEELS (Continued)

RADIAL FORCE VARIATION

Radial Force Variation can be checked using the Hunter GSP 9700 Vibration Control System (Wheel Balancer) or equivalent, if available. This type of equipment helps to correct ride disturbances by reducing the radial force variation of an assembly through re-indexing of the tire to wheel.

The equipment manufacturer or DaimlerChrysler Corporation may supply reference values as guidelines. Radial force measurements above the reference value may not always result in a ride disturbance, nor do they automatically mean the assembly components are out of specification. Do not replace components based on radial force values alone. Balancing, runout diagnosis, re-indexing, and subjective road testing must be performed as outlined in previous sections of this diagnosis and testing procedure.

Use the Radial Force equipment to identify suspect assemblies and minimize the radial forces. After all suspect assemblies are optimized, reinstall the assemblies and road test the vehicle. If a disturbance still exists and all other vibration diagnostic procedures have been completed, replace one tire or one wheel at a time, starting with the assembly having the highest force variation. Be sure to minimize each new assembly. Road test the vehicle following each replacement. Continue this process until the disturbance is resolved.

NOTE: When using Radial Force equipment, it is critically important to set proper tire inflation pressure and ensure centering of the wheel on the equipment spindle.

RADIAL FORCE VARIATION REFERENCE VALUES

DESCRIPTION	SPECIFICATION
Total Radial Force Variation (RFV)	Less Than 22 Lbs. ± 2 Lbs.
Radial First Harmonic (R1H)	Less Than 16 Lbs. ± 2 Lbs.
Radial Second Harmonic (R2H)	Less Than 12 Lbs. ± 2 Lbs.

STANDARD PROCEDURE

STANDARD PROCEDURE - TIRE AND WHEEL BALANCE

NOTE: Balance equipment must be calibrated and maintained per equipment manufacturer's specifications.

Wheel balancing can be accomplished with either on-vehicle or off-vehicle equipment.

NOTE: If using on-vehicle balancing equipment, on the driving axle, remove the opposite wheel and tire assembly.

It is recommended that a two-plane dynamic balancer be used when a wheel and tire assembly requires balancing. A static balancer should only be used when a two-plane balancer is not available.

Balance wheel and tire assemblies dynamically and statically to less than 0.25 (¼) ounce.

For static balancing, find location of heavy spot causing imbalance. Counter balance wheel directly opposite the heavy spot. Determine weight required to counterbalance the area of imbalance. Place half of this weight on the **inner** rim flange and the other half on the **outer** rim flange (Fig. 8).

For dynamic balancing, the balance equipment is designed to indicate the location and amount of weight to be applied to both the inner and outer rim flanges (Fig. 9).

The aluminum wheels on this vehicle use a unique wheel weight (Fig. 10). This wheel weight is designed to fit the contoured surface of the wheel (Fig. 10). When balancing an aluminum wheel, this wheel weight must be used. Do not use any other type of wheel weight. It will not properly fit the contour of the wheel.

Always verify the Balance. When using off-vehicle equipment, rotate assembly 180 degrees on balance equipment to verify balance. Variation should not be more than 0.125 (⅛) ounce. If variation is more than 0.125 ounce, balancing equipment could be malfunctioning.

TIRES/WHEELS (Continued)

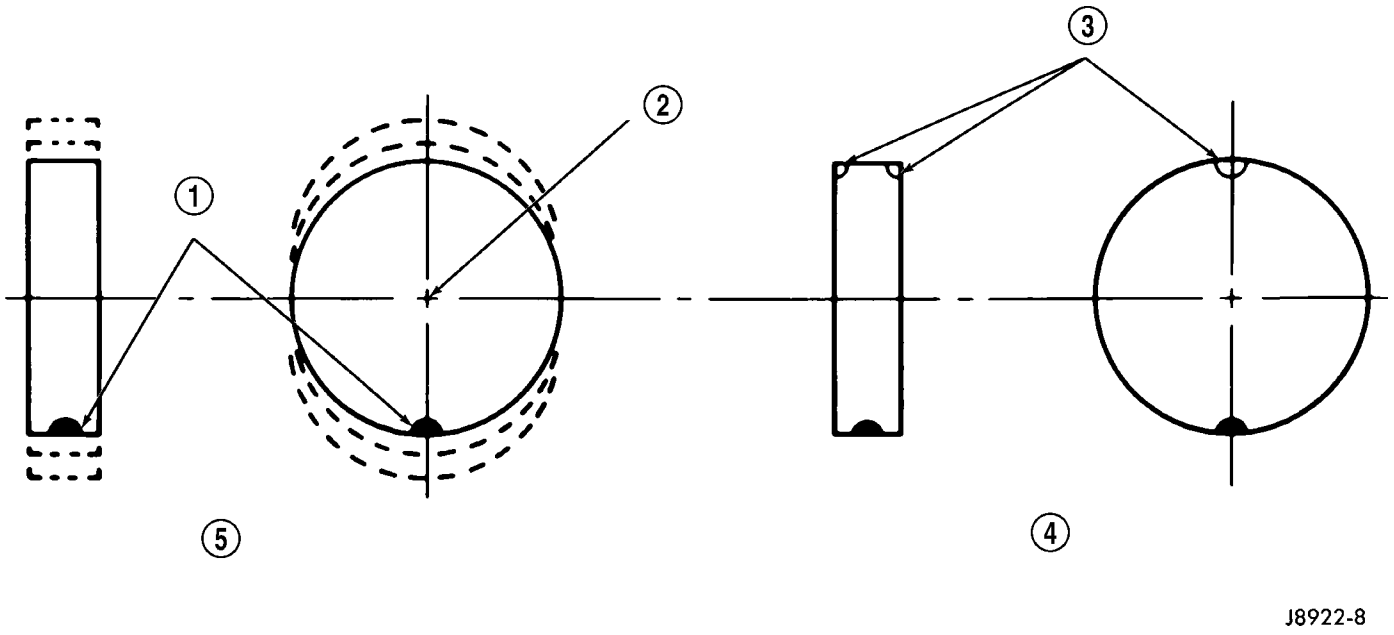

Fig. 8 Static Unbalance & Balance

1 - HEAVY SPOT
2 - CENTER LINE OF SPINDLE
3 - ADD BALANCE WEIGHTS HERE
4 - CORRECTIVE WEIGHT LOCATION
5 - TIRE OR WHEEL TRAMP, OR WHEEL HOP

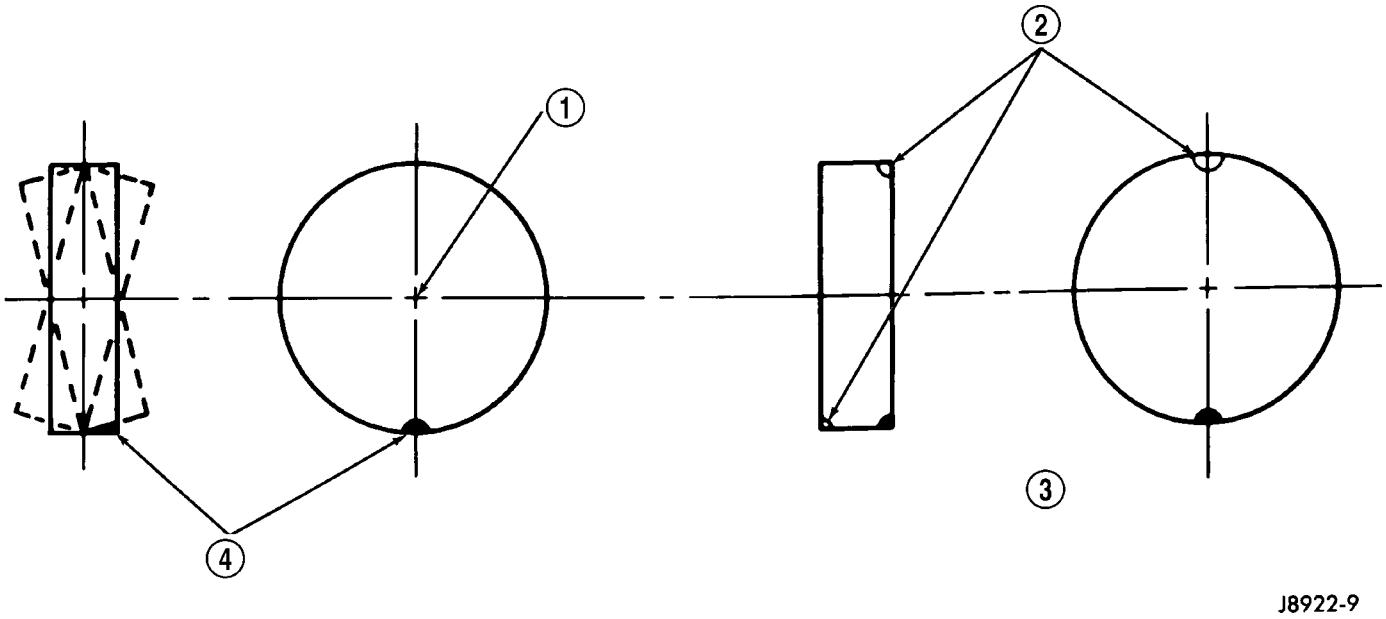

Fig. 9 Dynamic Unbalance & Balance

1 - CENTER LINE OF SPINDLE
2 - ADD BALANCE WEIGHTS HERE
3 - CORRECTIVE WEIGHT LOCATION
4 - HEAVY SPOT WHEEL SHIMMY AND VIBRATION

TIRES/WHEELS (Continued)

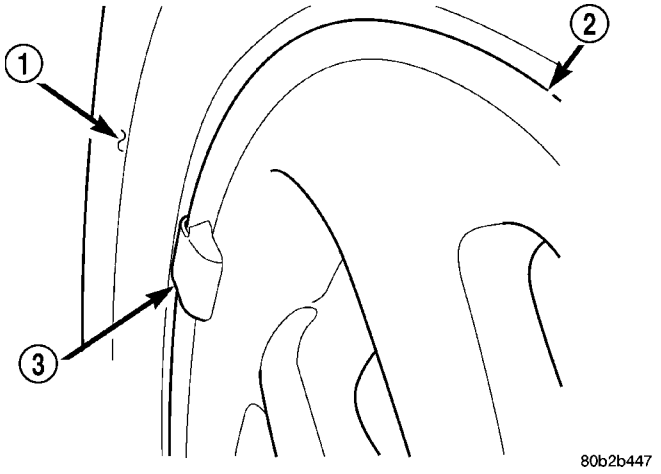

Fig. 10 Aluminum Wheel Weight

1 - TIRE
2 - WHEEL
3 - WHEEL WEIGHT

If difficult to balance, break down the wheel and tire assembly and check for loose debris inside tire. Prior to disassembly, mark (index) the tire at the valve stem. Use this mark in order to remount the tire in its original orientation with respect to the wheel.

STANDARD PROCEDURE - TIRE AND WHEEL MATCH MOUNTING

Wheels and tires are match mounted at the factory. This means that the high spot of the tire is matched to the low spot on the wheel rim. This technique is used to reduce runout in the wheel and tire assembly. The high spot on the tire is marked with a paint mark or a bright colored adhesive label on the outboard sidewall. The low spot on the wheel is identified with a label on the outside of the rim and a dot or line in the drop well area of the rim (inside where the tire mounts). If the outside label has been removed, the tire will have to be removed to locate the dot or line on the inside of the rim. The tire can then be match mounted to the tire.

Information on match mounting the tire to the wheel can be found in Tire and Wheel Runout/Match Mounting, items (2) through (5), within Diagnosis And Testing - Tire And Wheel Vibration. (Refer to 22 - TIRES/WHEELS - DIAGNOSIS AND TESTING)

STANDARD PROCEDURE - TIRE AND WHEEL ROTATION

NON-DIRECTIONAL TREAD PATTERN TIRES

Tires on the front and rear axles operate at different loads and perform different functions. For these reasons, they wear at unequal rates, and tend to develop irregular wear patterns. These effects can be reduced by timely rotation of tires. The benefits of rotation are especially worthwhile. Rotation will increase tread life, help to maintain mud, snow, and wet traction levels, and contribute to a smooth, quiet ride.

The suggested rotation method is the forward-cross tire rotation method (Fig. 11). This method takes advantage of current tire industry practice which allows rotation of radial-ply tires. Other rotation methods may be used, but may not have all the benefits of the recommended method.

NOTE: Only the 4 tire rotation method may be used if the vehicle is equipped with a low mileage or temporary spare tire.

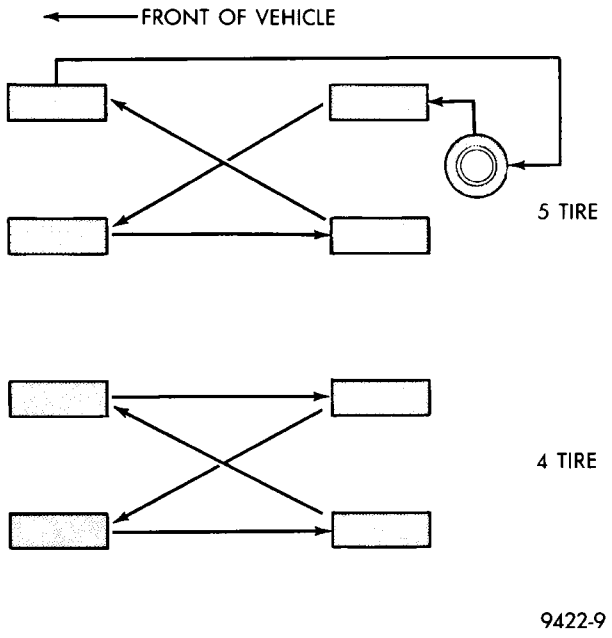

Fig. 11 Forward-Cross Tire Rotation Method

DIRECTIONAL TREAD PATTERN TIRES

Some vehicles are fitted with special high-performance tires having a directional tread pattern. These tires are designed to improve traction on wet pavement. To obtain the full benefits of this design, the tires must be installed so that they rotate in the correct direction. This is indicated by arrows on the tire sidewalls.

When wheels and tires are being installed, extra care is needed to ensure that this direction of rotation is maintained.

Refer to Owner's Manual for rotation schedule.

TIRES/WHEELS (Continued)

REMOVAL

REMOVAL - TIRE AND WHEEL ASSEMBLY (ALUMINUM WHEEL)

(1) Raise the vehicle so the tire and wheel assembly clears ground level.

(2) Remove the 5 wheel mounting nuts from the studs.

(3) Remove the tire and wheel from the hub.

REMOVAL - TIRE AND WHEEL ASSEMBLY (STEEL WHEEL)

(1) Raise the vehicle so the tire and wheel assembly clears ground level.

(2) Noting the location of the valve stem in relationship to the wheel mounting nuts, remove the three wheel mounting nuts securing the wheel cover to the wheel and hub (Fig. 12).

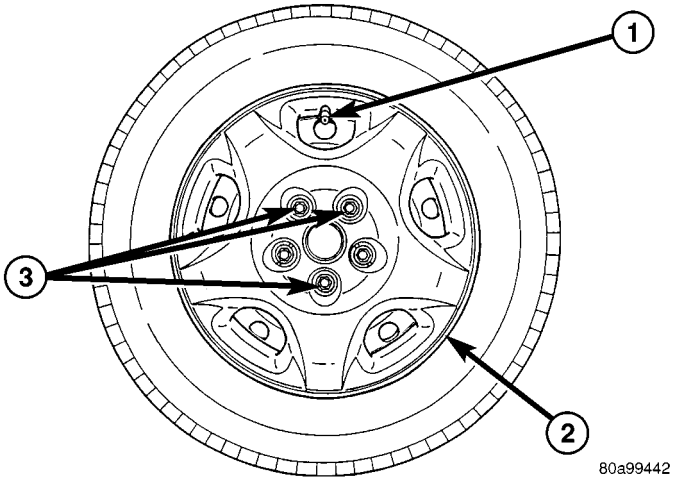

Fig. 12 NUTS SECURING WHEEL COVER

1 - VALVE STEM
2 - BOLT-ON WHEEL COVER
3 - NUTS SECURING WHEEL COVER

CAUTION: When removing the wheel cover, do not pry the wheel cover from the wheel. This can result in damage to the wheel cover. The wheel cover is removed by pulling it off the wheel by hand.

(3) Grasp the wheel cover at the edges in line with the remaining installed wheel mounting nuts and pull straight outward from the wheel. This will pop the wheel cover retaining tabs over the two remaining wheel nuts, removing the wheel cover from the vehicle.

(4) Remove the two remaining wheel mounting nuts from the hub's studs.

(5) Remove the wheel and tire from the hub.

INSTALLATION

INSTALLATION - TIRE AND WHEEL ASSEMBLY (ALUMINUM WHEEL)

NOTE: Never use oil or grease on studs or wheel mounting nuts.

(1) Position the tire and wheel assembly on the wheel mounting studs using the hub pilot as a guide. Place and hold the wheel flush up against the mounting surface.

(2) Loosely install all 5 wheel mounting nuts. Lightly snug the wheel nuts, then progressively tighten them in the proper sequence (Fig. 13). Tighten wheel mounting nuts to 135 N·m (100 ft. lbs.).

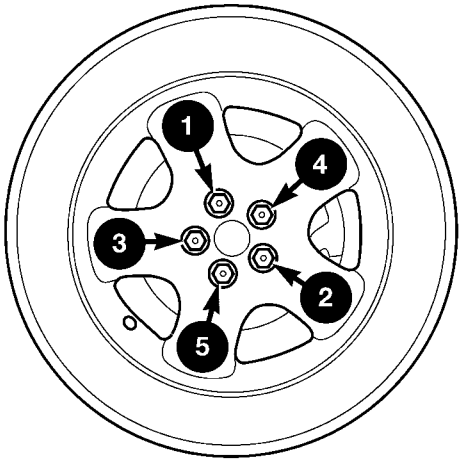

Fig. 13 Tightening Sequence

(3) Lower the vehicle.

INSTALLATION - TIRE AND WHEEL ASSEMBLY (STEEL WHEEL)

NOTE: Never use oil or grease on studs or wheel mounting nuts.

(1) Position the tire and wheel assembly on the wheel mounting studs using the hub pilot as a guide. Place and hold the wheel flush up against the mounting surface.

NOTE: Wheel mounting nuts must be installed on the studs as shown (Fig. 14) to allow proper installation of the wheel cover.

(2) Using the valve stem as an index placed at the 12 O'clock position, install and **lightly tighten** two wheel mounting nuts on the studs located at the 4 O'clock and 8 O'clock positions as shown (Fig. 14).

TIRES/WHEELS (Continued)

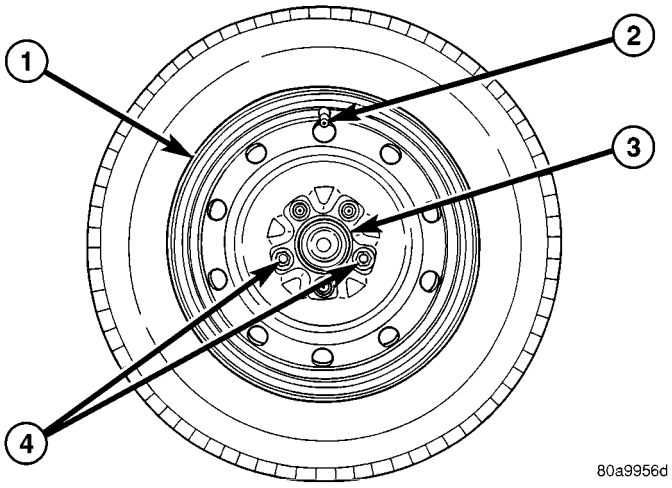

Fig. 14 TWO WHEEL MOUNTING NUTS INSTALLED

1 - WHEEL
2 - VALVE STEM
3 - HUB PILOT
4 - NUTS

(3) Place the wheel cover on the wheel in the following fashion:

(a) Align the valve notch in the wheel cover with the valve stem on the wheel.

(b) At the same time, align the two holes in the wheel cover having the retaining tabs with the two installed wheel nuts (Fig. 15).

(c) Press in on center of wheel cover until wheel cover retaining tabs push past and engage rear of previously installed wheel mounting nuts (Fig. 15). This will hold the wheel cover in place.

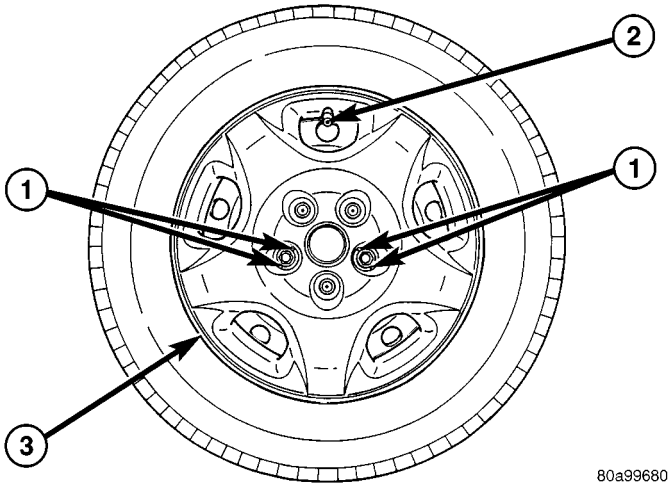

Fig. 15 WHEEL COVER INSTALLATION OVER TWO NUTS

1 - RETAINING TABS
2 - VALVE STEM
3 - BOLT-ON WHEEL COVER

(4) Install and **lightly tighten** the three remaining wheel mounting nuts, securing the wheel cover in place (Fig. 12).

(5) Progressively tighten all five wheel mounting nuts in the proper sequence (Fig. 16). Tighten wheel nuts to a torque of 135 N·m (100 ft. lbs.).

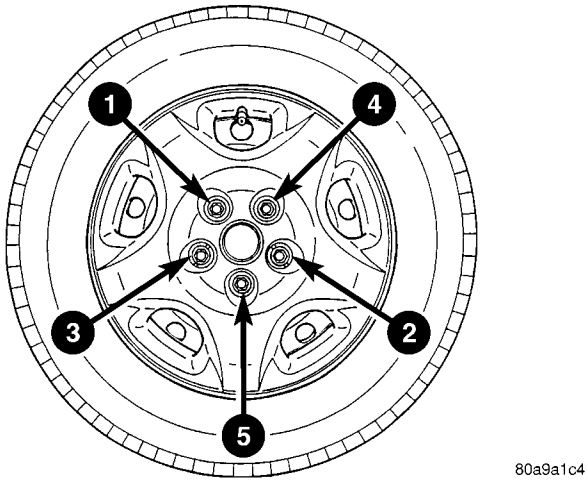

Fig. 16 NUT TIGHTENING SEQUENCE

(6) Lower the vehicle.

TIRE PRESSURE MONITORING

DESCRIPTION

Some versions of this vehicle are equipped with Tire Pressure Monitoring (TPM). TPM monitors air pressure in the four road tires. The system alerts the driver when tire pressure in any of the four road wheels falls below a predetermined threshold (pressure too low).

Depending on optional equipment, a vehicle may have four or five sensors (fifth sensor located in spare wheel). Although a pressure sensor may be present in the spare tire wheel of the five sensor system, pressure in the spare tire is not monitored.

There are two systems available, Base and Premium. The Base system offers an indicator lamp, warning the driver of a pressure issue. An audible chime also sounds once when a pressure issue occurs. In addition to these features, the Premium system offers an Electronic Vehicle Information Center (EVIC) display of information.

For further information, refer to the Owners Manual or the appropriate diagnostic information.

TIRE PRESSURE MONITORING (Continued)

OPERATION

The Tire Pressure Monitoring (TPM) system uses radio and sensor technology to monitor tire air pressure levels. Sensors, mounted to each road wheel as part of the valve stem, transmit a low frequency indicating their individual pressure to a receiver located in the Wireless Control Module (WCM) portion of the Sentry Key Remote Electronic Entry Module (SKREEM). These transmissions occur approximately once every minute at speeds over 20 mph (32 km/h). The Tire Pressure Monitoring system remains active even if no tire pressure related message is displayed.

The sensors lay dormant (Park Mode), then wake and start transmitting (Drive Mode) when the vehicle first reaches speeds over 20 mph (32 km/h). Once the wheels stop rotating for a period of approximately 30 minutes, the sensors shut down until again awaken. Although not transmitting as when in Drive Mode, while in Park Mode, the sensors still transmit approximately once every 13 hours to let the receiver know air pressure status at that time.

The receiver only receives information from the four rotating tires. A fifth sensor may be located in the spare tire wheel, depending on vehicle options. Although this fifth sensor may be present, it does not broadcast any information because it does not rotate.

When the system detects that a tire is going low, below the Low Pressure (lamp) ON Threshold (See following table), the driver is alerted to the situation. The Base system illuminates an indicator lamp, warning the driver of a pressure issue and sounds an audible chime. In equipped with the Premium system, the information is also displayed on the Electronic Vehicle Information Center (EVIC).

Once pressure in the suspect tire raises above the Low Pressure (lamp) OFF Threshold, the lamp will go out and the system returns to normal.

TPM THRESHOLD PRESSURES

DESCRIPTION	SPECIFICATION
Placard Pressure (Cold)	36 PSI (248 kPa)
Low Pressure OFF Threshold	33 PSI (228 kPa)
Low Pressure ON Threshold	28 PSI (193 kPa)

SENSOR - TPM

DESCRIPTION

On vehicles equipped with Tire Pressure Monitoring, one tire pressure sensor is mounted to each road wheel (Fig. 18), and depending on factory wheel options, a sensor may be located in the spare tire wheel. Both aluminum and steel wheels are used in this system, although sensors for one type wheel cannot be used in the other type wheel.

Each sensor has an internal battery that lasts up to 10 years. The battery is not serviceable. At the time of battery failure, the sensor must be replaced. The serviceable components of the tire pressure sensor are:

- Sensor-To-Wheel Grommet
- Valve Stem Cap
- Valve Stem Core

Valve stem caps and cores are specifically designed for the tire pressure monitoring sensors. Although similar to standard valve stem caps and cores, they are different.

CAUTION: Do not use a standard valve stem cap or core in a tire pressure sensor. Always use the original equipment style sensor cap and core.

CAUTION: Do not reuse the Sensor-To-Wheel Grommet. Always use a new grommet when installing a pressure sensor and properly torque the sensor nut.

CAUTION: Do not attempt to install a tire pressure sensor in an aftermarket wheel. Use only in original style factory wheels.

OPERATION

The battery operated tire pressure sensors lay dormant (Park Mode), then wake and start transmitting (Drive Mode) when the vehicle first reaches speeds over 20 mph (32 km/h). Once the wheels stop rotating for a period of approximately 30 minutes, the sensors shut down until again awaken. Although not transmitting as when in Drive Mode, while in Park Mode, the sensors still transmit approximately once every 13 hours to let the receiver know air pressure status at that time.

Each sensor transmits tire pressure data approximately once every minute. Each sensor's (transmitter) broadcast is uniquely coded so that the wireless control module (WCM) can monitor the state of each of the sensors on the four rotating road wheels. The WCM (located in the SKREEM) automatically learns and stores the sensor's ID while driving after a sensor has been replaced. There is no retraining necessary.

The receiver only receives information from the four rotating tires. A fifth sensor may be located in the spare tire wheel, depending on vehicle options. Although this fifth sensor may be present, it does not broadcast any information because it does not rotate.

For additional information, refer to Appropriate Diagnostic Information.

SENSOR - TPM (Continued)

CAUTION

CAUTION: The use of tire sealants is strictly prohibited for vehicles equipped with the Tire Pressure Monitoring system. Tire sealants can clog tire pressure sensors.

CAUTION: Tire pressure sensor valve stem caps and cores are specially designed for the sensors. Due to risk of corrosion, do not use a standard valve stem cap or core in a tire pressure sensor in place of the original equipment style sensor cap and core.

CAUTION: Do not attempt to install a tire pressure sensor in a steel wheel or aftermarket wheel. Use tire pressure sensors in original style factory wheels only.

NOTE: TPM thresholds have been established for the original tire size equipped on the vehicle. Use original size tires only to maintain system accuracy.

DIAGNOSIS AND TESTING - TIRE PRESSURE SENSOR

NOTE: Tire pressure may increase from 2 to 6 psi (14 to 41 kPa) during normal driving conditions. Do NOT reduce this normal pressure build up.

If a fault in the system is detected, always check air pressure in the tires first with a known accurate air gauge and correct the inflation pressure. If any tire is low, inspect **all** the tires.

If the gauge-read pressure in the tires does not indicate a tire pressure issue, refer to the appropriate diagnostic information.

REMOVAL

(1) Remove tire and wheel assembly from vehicle. (Refer to 22 - TIRES/WHEELS - REMOVAL)

CAUTION: The cap used on this valve stem contains an O-ring seal to prevent contamination and moisture from entering the valve stem. Retain this valve stem cap for reuse. Do not substitute a regular valve stem cap in its place.

CAUTION: The valve stem used on this vehicle is made of aluminum and the core is nickel plated brass. The original valve stem core must be reinstalled and not substituted with a valve stem core made of a different material. This is required to prevent corrosion in the valve stem caused by the different metals.

(2) Dismount tire from wheel following tire changer manufacturers instructions while paying special attention to the following to avoid damaging the pressure sensor:

(a) When breaking the tire bead loose from the wheel rim, avoid using the Bead Breaker in the area of the sensor. That includes both front and rear beads of the tire.

(b) When preparing to dismount the tire from the wheel, carefully insert the mounting/dimounting tool at the valve stem ± 10° (Fig. 17), then proceed to dismount the tire from the wheel. Use this process on both the upper and lower tire beads.

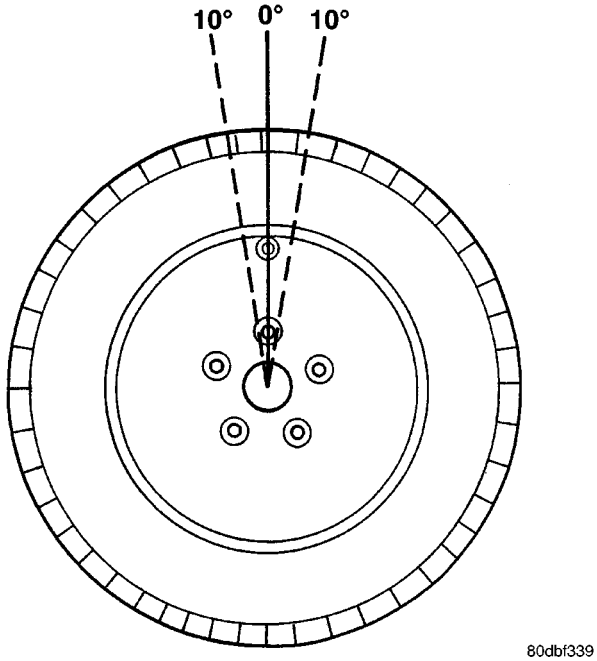

Fig. 17 Start Mount/Dismount Tool Within 10 Degrees Of Valve Stem

(3) Using a thin wall socket, remove special nut retaining sensor to wheel (Fig. 18).

(4) Remove sensor from wheel (Fig. 18).

INSTALLATION

NOTE: Before reinstalling a tire pressure sensor, replace sealing grommet at base of valve stem.

(1) Wipe area clean where sensor sealing grommet contacts wheel. Make sure surface of wheel is not damaged.

(2) Install sensor in wheel as shown (Fig. 18). Do not attempt to mount sensor otherwise, damage may occur.

(3) Using a thin wall socket, install special sensor nut (Fig. 18). Tighten nut to 4 N·m (35 in. lbs.) torque.

SENSOR - TPM (Continued)

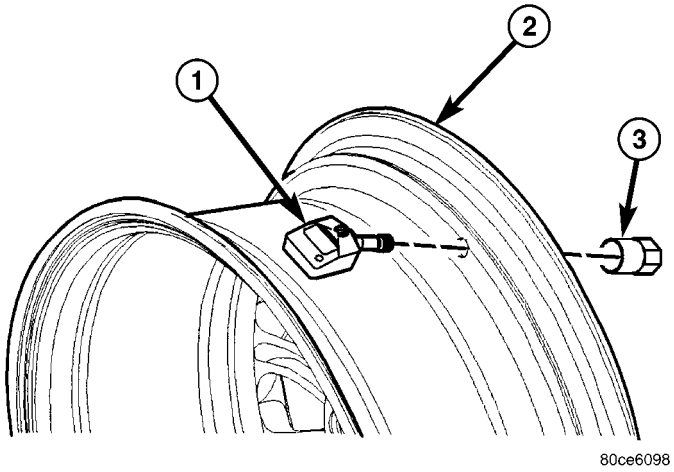

Fig. 18 Sensor Mounting To Wheel

1 - TIRE PRESSURE SENSOR
2 - WHEEL
3 - NUT

CAUTION: Over-torquing the sensor nut by as little as 12 N·m (106 in. lbs.) may result in sensor separation from the valve stem. Under this condition, the sensor may still function, however, the condition should be corrected immediately.

(4) Mount tire on wheel following tire changer manufacturers instructions, paying special attention to the following to avoid damaging tire pressure sensor:

(a) Rotating Wheel Tire Changers - Once the wheel is mounted to the changer, position the sensor valve stem approximately 210° from the head of the changer in a clockwise direction before rotating the wheel (also in a clockwise direction) to mount the tire (Fig. 19). Use this procedure on both the upper and lower tire beads.

(b) Rotating Tool Tire Changers - Position the wheel on the changer so that the sensor valve stem is approximately 210° from the head of the changer in a clockwise direction from the mounting end of the tool (Fig. 20) Make sure the sensor is clear of the lower bead breaker area to avoid damaging the sensor when the breaker rises (Fig. 20). Rotate the tool in a counterclockwise direction to mount the tire. Use this procedure on both the upper and lower tire beads.

(5) Install wheel and tire assembly on vehicle. (Refer to 22 - TIRES/WHEELS - INSTALLATION)

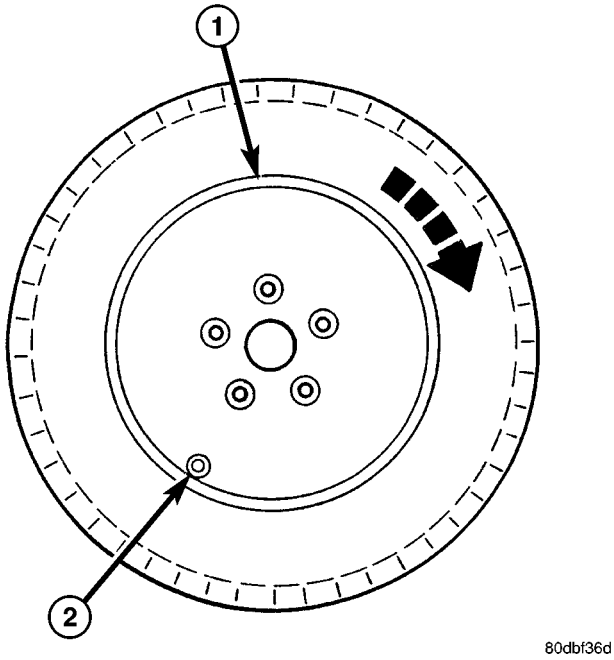

Fig. 19 Mounting Tire Using Rotating Wheel Machine

1 - HEAD OF CHANGER LOCATED HERE
2 - VALVE STEM

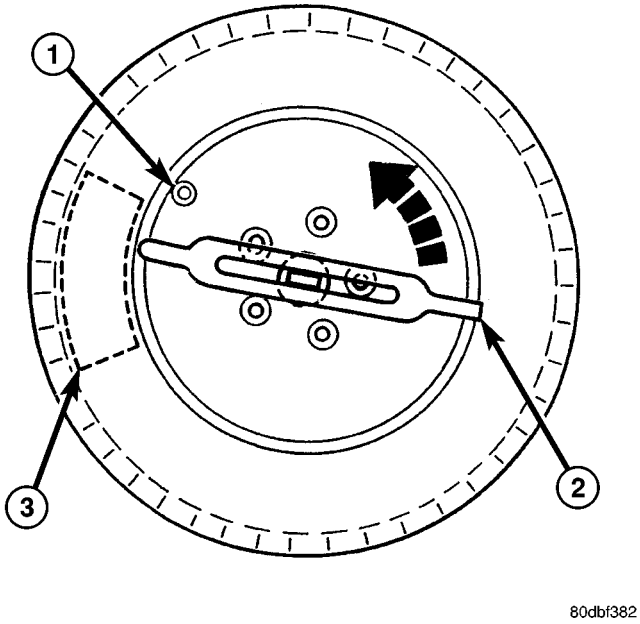

Fig. 20 Mounting Tire Using Rotating Tool Machine

1 - VALVE STEM
2 - MOUNTING END OF TOOL
3 - BEAD BREAKER (KEEP CLEAR OF SENSOR)

TIRES

DESCRIPTION

DESCRIPTION - TIRE

Tires are designed and engineered for each specific vehicle. They provide the best overall performance for normal operation. The ride and handling characteristics match the vehicle's requirements. With proper care they will give excellent reliability, traction, skid resistance, and tread life.

Driving habits have more effect on tire life than any other factor. Careful drivers will obtain, in most cases, much greater mileage than severe use or careless drivers. A few of the driving habits which will shorten the life of any tire are:

- Rapid acceleration
- Severe application of brakes
- High-speed driving
- Taking turns at excessive speeds
- Striking curbs and other obstacles
- Operating vehicle with over or under inflated tire pressures

Radial ply tires are more prone to irregular tread wear. It is important to follow the tire rotation interval shown in the section on Tire Rotation. This will help to achieve a greater tread-life potential.

TIRE IDENTIFICATION

Tire type, size, load index and speed rating are encoded in the letters and numbers imprinted on the side wall of the tire. Refer to the Tire Identification chart to decipher the code. For example purposes, the tire size P225/60 R 16 97 T is used in the chart. An All Season type tire will also have either M + S, M & S or M - S (indicating mud and snow traction) imprinted on the side wall. An Extra or Light Load marking “XL” or “LL” may also be listed on the sidewall. The absence of an “XL” or “LL” marking infers a standard load tire.

TIRE IDENTIFICATION

P	TIRE TYPE (Not present on all tires)	P - Passenger T - Temporary C - Commercial LT - Light Truck
225	SECTIONAL WIDTH	SHOWN IN MILLIMETERS
60	ASPECT RATIO	SECTIONAL HEIGHT ÷ SECTIONAL WIDTH (Refer to Aspect Ratio Figure 21)
R	CONSTRUCTION TYPE	R - RADIAL B - BIAS BELTED D - DIAGONAL (BIAS)
16	WHEEL DIAMETER	SHOWN IN INCHES
97	LOAD INDEX	*
T	SPEED RATING	*

*** NOTE: Consult the tire manufacturer regarding any questions on tire specifications or capabilities.**

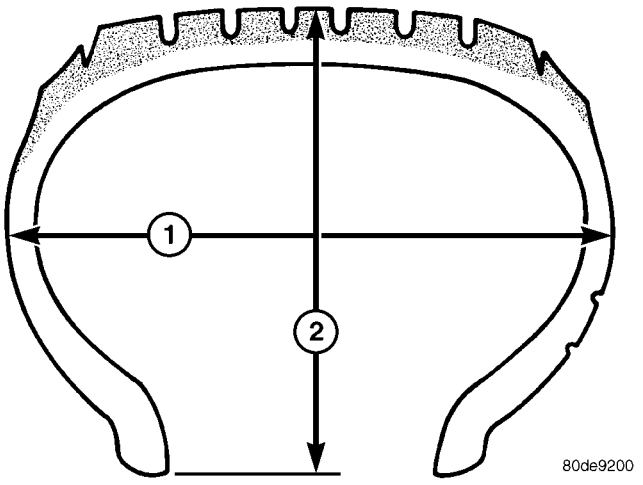

Fig. 21 Tire Aspect Ratio

1 - SECTIONAL WIDTH
2 - SECTIONAL HEIGHT

TIRE CHAINS

Refer to the owners manual supplied with the vehicle to determine whether the use of tire chains is permitted on this vehicle.

DESCRIPTION - RADIAL-PLY TIRES

Radial-ply tires improve handling, tread life, ride quality and decrease rolling resistance.

TIRES (Continued)

Radial-ply tires must always be used in sets of four and under no circumstances should they be used on the front only. It is recommended that tires from different manufacturers NOT be mixed. They may be mixed with a temporary spare tire when necessary. A maximum speed of 80 km/h (50 mph) is recommended while a temporary spare is in use.

Radial-ply tires have the same load-carrying capacity as other types of tires of the same size. They also use the same recommended inflation pressures.

DESCRIPTION - REPLACEMENT TIRES

WARNING: FAILURE TO EQUIP THE VEHICLE WITH TIRES HAVING ADEQUATE SPEED CAPABILITY CAN RESULT IN SUDDEN TIRE FAILURE.

WARNING: IN ORDER TO MAINTAIN THE SPEED CAPABILITY OF THE VEHICLE, REPLACEMENT TIRES MUST HAVE SPEED RATINGS EQUAL TO OR HIGHER THAN THOSE FITTED TO THE VEHICLE AS ORIGINAL EQUIPMENT. IF TIRES WITH LOWER SPEED RATINGS ARE FITTED, THE VEHICLE'S HANDLING MAY BE AFFECTED AND THE SPEED CAPABILITY OF THE VEHICLE MAY BE LOWERED TO THE MAXIMUM SPEED CAPABILITY OF THE REPLACEMENT TIRES. TO AVOID AN ACCIDENT RESULTING IN SEVERE OR FATAL INJURY, CONSULT THE TIRE MANUFACTURER IN REGARDS TO MAXIMUM SPEED RATINGS.

It is recommended that tires equivalent to the original equipment tires be used when replacement is needed.

Failure to use equivalent replacement tires may adversely affect the safety and handling of the vehicle.

The original equipment tires provide a proper combination of many characteristics such as:

- Ride
- Noise
- Handling
- Durability
- Tread life
- Traction
- Rolling resistance
- Speed capability

The use of tires smaller than the minimum tire size approved for the vehicle can result in tire overloading and failure.

Use tires that have the approved load rating for the vehicle and never overload them. Failure to equip the vehicle with tires having adequate speed capability can result in sudden tire failure and loss of vehicle control.

The use of oversize tires may cause interference with vehicle components. Under extremes of suspension and steering travel, interference with vehicle components may cause tire damage.

DESCRIPTION - SPARE TIRE (TEMPORARY)

The temporary (convenience) spare tire is designed for emergency use only. The original tire should be repaired and reinstalled, or replaced with a new, at the first opportunity.

The temporary (convenience) spare tire should be inflated to the pressure listed on its sidewall. Do not exceed speeds of 80 km/h (50 mph) when the temporary spare tire is in use on the vehicle. Refer to the Owner's Manual for more details.

DIAGNOSIS AND TESTING

DIAGNOSIS AND TESTING - TIRE NOISE

Unusual tire noise can be associated with tire and wheel vibration or irregular tire wear. For vibration, (Refer to 22 - TIRES/WHEELS - DIAGNOSIS AND TESTING). For irregular tire wear, (Refer to 22 - TIRES/WHEELS/TIRES - DIAGNOSIS AND TESTING).

DIAGNOSIS AND TESTING - TIRE/VEHICLE LEAD

Use the following Vehicle Lead Diagnosis And Correction Chart to diagnose and correct a vehicle lead or drift problem.

TIRES (Continued)

VEHICLE LEAD DIAGNOSIS AND CORRECTION CHART

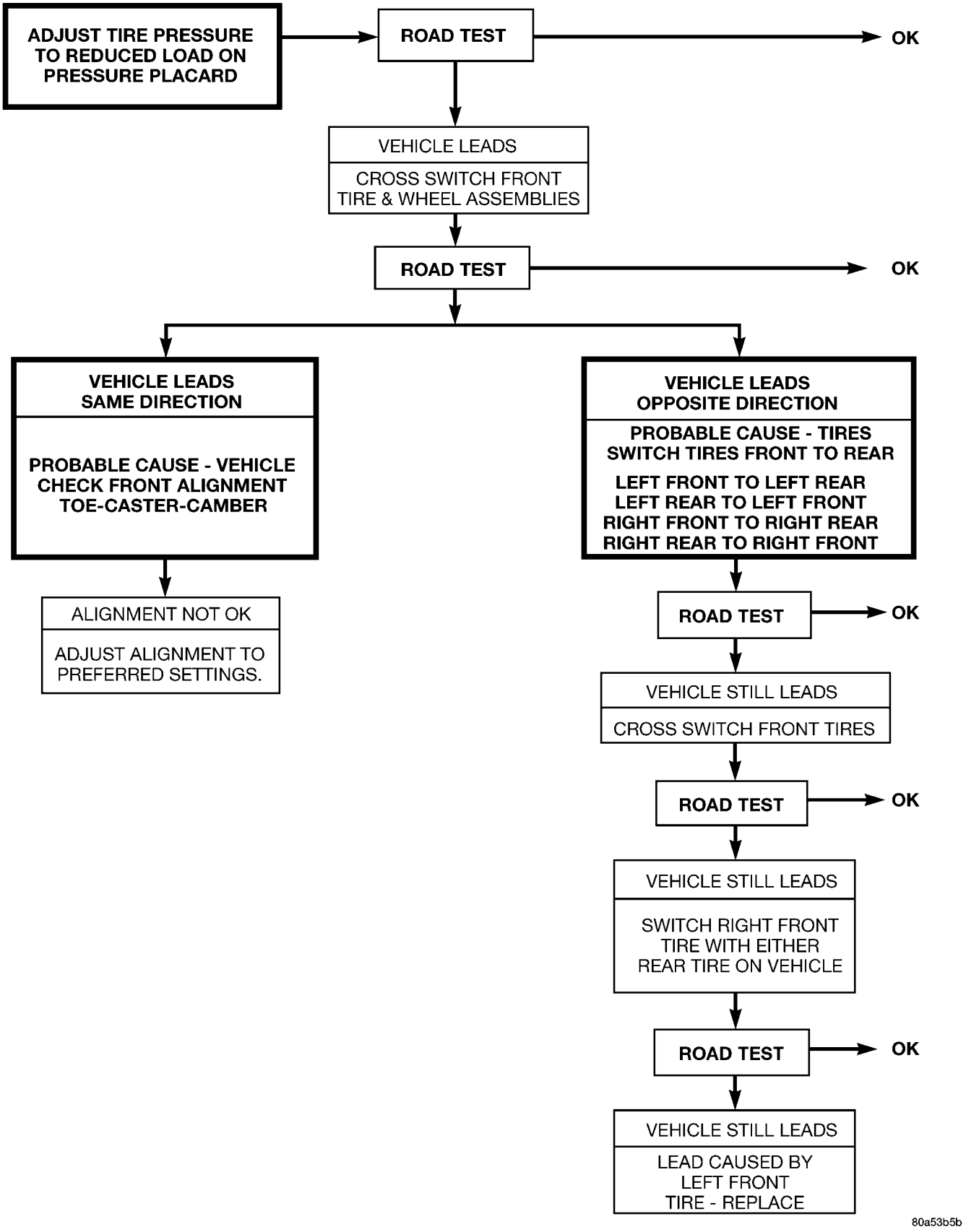

TIRES (Continued)

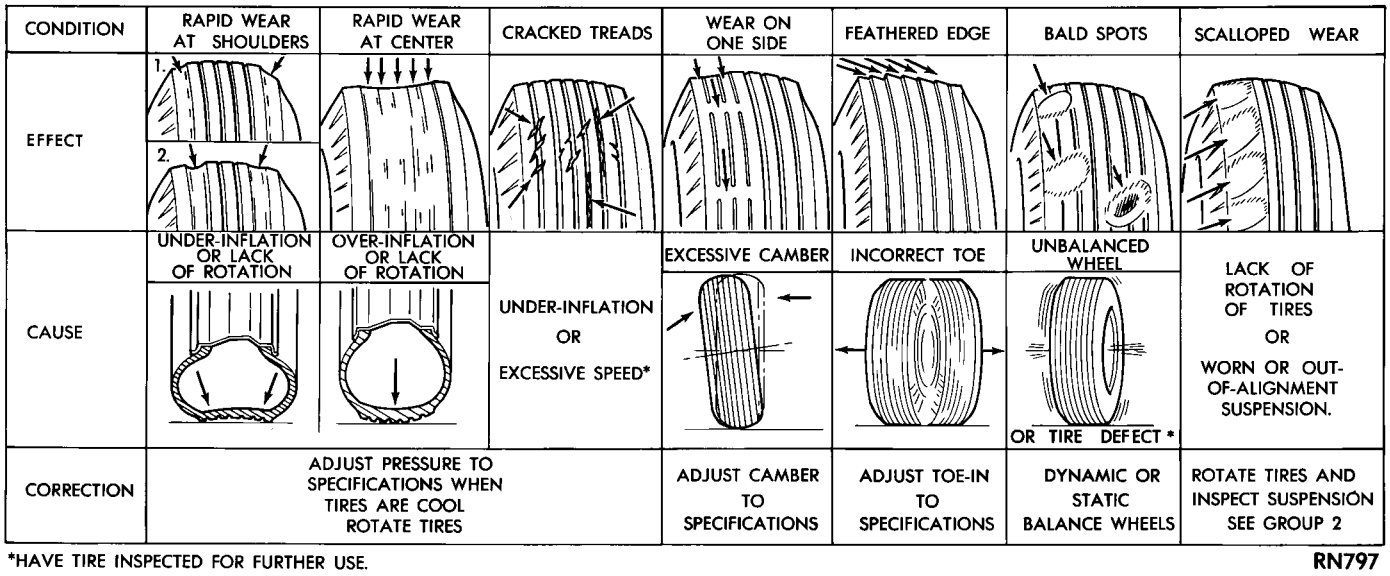

Fig. 22 Tire Wear Patterns

DIAGNOSIS AND TESTING - TIRE WEAR PATTERNS

Under inflation will cause wear on the shoulders of tire. Over inflation will cause wear at the center of tire.

Excessive camber causes the tire to run at an angle to the road. One side of tread is then worn more than the other (Fig. 22).

Excessive toe-in or toe-out causes wear on the tread edges and a feathered effect across the tread (Fig. 22).

DIAGNOSIS AND TESTING - TREAD WEAR INDICATORS

Tread wear indicators are molded into the bottom of the tread grooves. When tread depth is 1.6 mm (1/16 in.), the tread wear indicators will appear as a 13 mm (1/2 in.) band (Fig. 23).

Tire replacement is necessary when indicators appear in two or more grooves or if localized balding occurs.

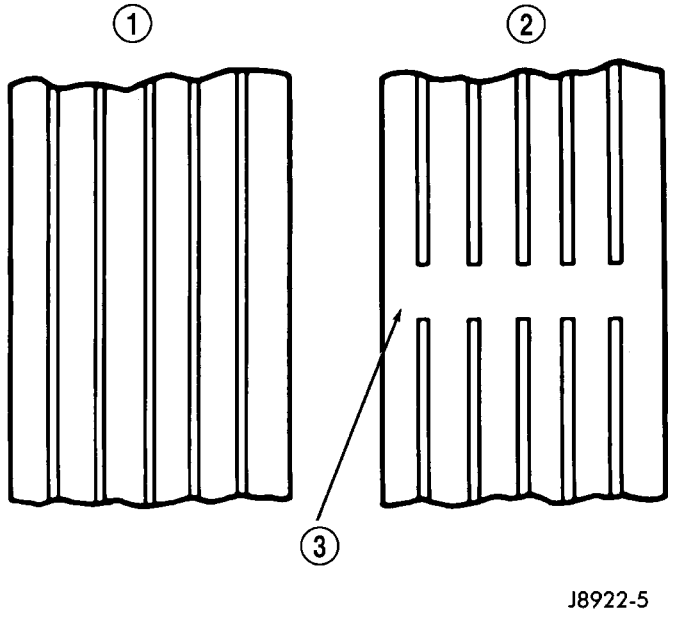

Fig. 23 Tread Wear Indicators

1 - TREAD ACCEPTABLE
2 - TREAD UNACCEPTABLE
3 - WEAR INDICATOR

STANDARD PROCEDURE

STANDARD PROCEDURE - TIRE INFLATION PRESSURES

The specified tire pressures have been chosen to provide safe operation, vehicle stability, and a smooth ride. The proper tire pressure specification can be found on the Tire Inflation Pressure Label provided with the vehicle (usually on the driver's side B-pillar).

A quality air pressure gauge is recommended to check tire air pressure. Tire pressure should be checked cold once per month. Check tire pressure more frequently when the weather temperature varies widely. Tire pressure will decrease when the outdoor temperature drops. After checking the air pressure, replace valve cap finger tight.

TIRES (Continued)

Inflation pressures specified on the Tire Inflation Pressure Label are always the cold inflation pressure of the tire. Cold inflation pressure is obtained after the vehicle has not been operated for at least 3 hours, or the vehicle is driven less than one mile after being inoperative for 3 hours. Tire inflation pressures may increase from 2 to 6 pounds per square inch (psi) (14 to 41 kPa) during operation. Do not reduce this normal pressure buildup.

Improper inflation can cause:

- Uneven wear patterns
- Reduced tread life
- Reduced fuel economy
- Unsatisfactory ride
- The vehicle to drift.

WARNING: OVER OR UNDER INFLATED TIRES CAN AFFECT VEHICLE HANDLING. THE TIRE CAN FAIL SUDDENLY, RESULTING IN LOSS OF VEHICLE CONTROL.

Under inflation causes rapid shoulder wear, tire flexing, and can result in tire failure (Fig. 24).

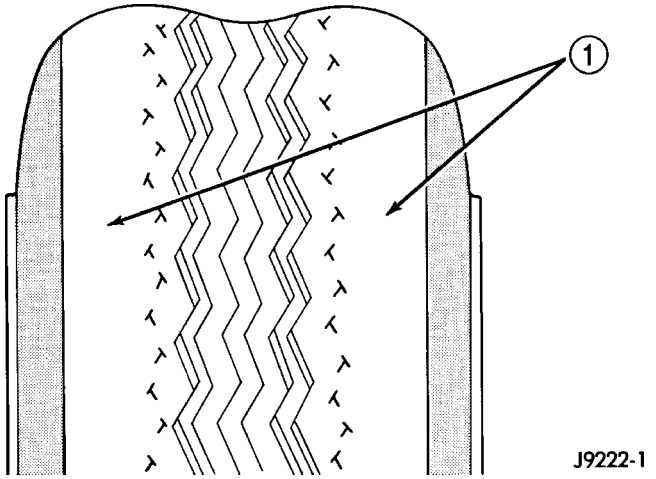

Fig. 24 Under Inflation Wear

1 - THIN TIRE TREAD AREAS

Over inflation causes rapid center wear and loss of the tire's ability to cushion shocks (Fig. 25).

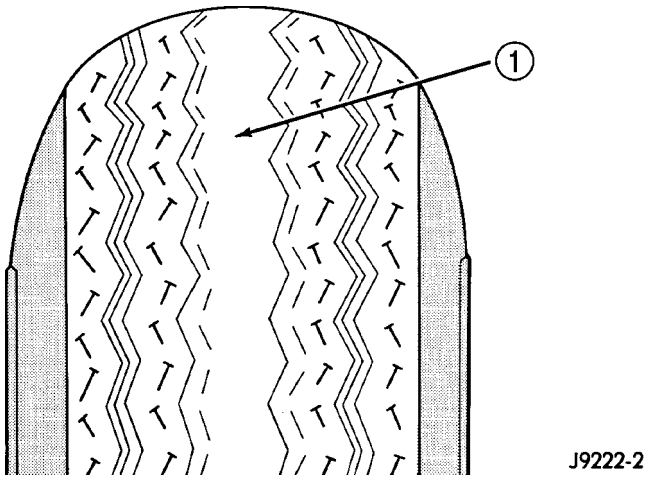

Fig. 25 Over Inflation Wear

1 - THIN TIRE TREAD AREA

STANDARD PROCEDURE - TIRE PRESSURE FOR HIGH SPEED OPERATION

DaimlerChrysler Corporation advocates driving at safe speeds within posted speed limits. Where speed limits allow the vehicle to be driven at high speeds, correct tire inflation pressure is very important. Vehicles loaded to maximum capacity should not be driven at continuous speeds over 120 km/h (75 mph). Never exceed the maximum speed capacity of the tire. For information on tire identification and speed ratings, (Refer to 22 - TIRES/WHEELS/TIRES - DESCRIPTION).

STANDARD PROCEDURE - TIRE LEAK REPAIRING

For proper repairing, a radial tire must be removed from the wheel. Repairs should only be made if the defect, or puncture, is in the tread area (Fig. 26). The tire should be replaced if the puncture is located in the sidewall.

Deflate tire completely before attempting to dismount the tire from the wheel. **Use a lubricant such as a mild soap solution when dismounting or mounting tire.** Use tools free of burrs or sharp edges which could damage the tire or wheel rim.

Before mounting tire on wheel, make sure all rust is removed from the rim bead and repaint if necessary.

Install wheel on vehicle, and progressively tighten the 5 wheel nuts to a torque of 135 N·m (100 ft. lbs.).

TIRES (Continued)

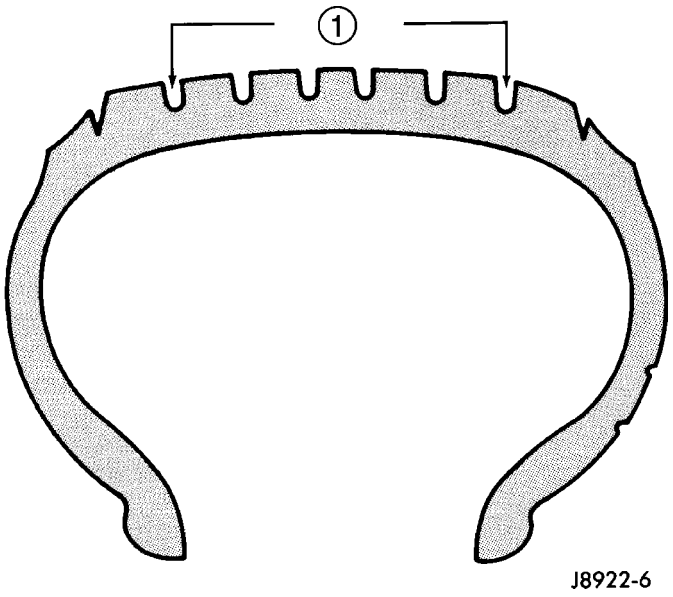

Fig. 26 Tire Repair Area

1 - REPAIRABLE AREA

CLEANING - TIRES

Before delivery of a vehicle, remove the protective coating on the tires with white sidewalls or raised white letters. To remove the protective coating, apply warm water and let it soak for a few minutes. Afterwards, scrub the coating away with a soft bristle brush. Steam cleaning may also be used to remove the coating.

CAUTION: DO NOT use gasoline, mineral oil, oil-based solvent or a wire brush for cleaning.

WHEELS

DESCRIPTION - WHEEL

Original equipment wheels are designed for proper operation at all loads up to the specified maximum vehicle capacity.

All models use either steel or aluminum drop-center wheels. Every wheel has raised sections between the rim flanges and rim drop well called safety humps (Fig. 27). Initial inflation of the tires forces the bead over these raised sections. In case of air loss, the safety humps hold the tire in position on the wheel until the vehicle can be brought to a safe stop.

Cast aluminum wheels require special balance weights to fit on the flange of the rim (Fig. 28).

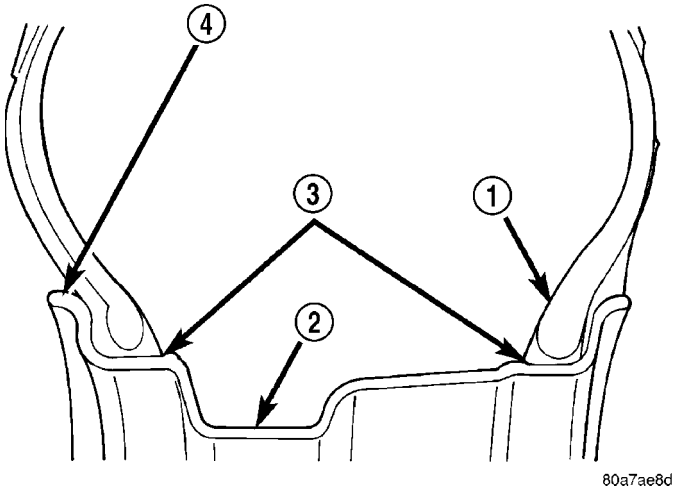

Fig. 27 Safety Rim

1 - TIRE
2 - WELL
3 - SAFETY HUMPS
4 - FLANGE

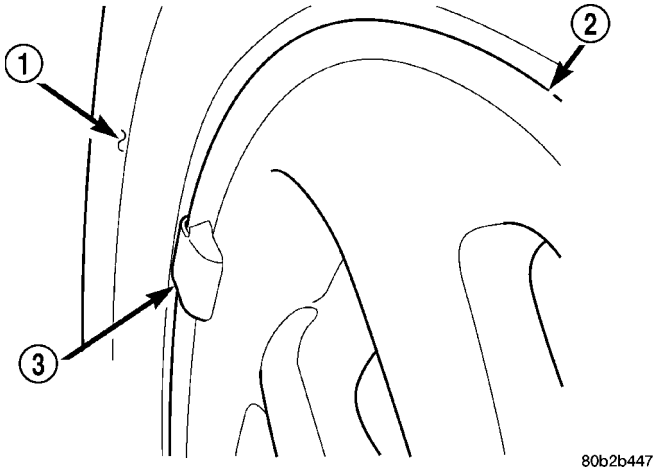

Fig. 28 Styled Aluminum Wheel Weight

1 - TIRE
2 - WHEEL
3 - STYLED WHEEL WEIGHT

When wheel alignment is necessary on a vehicle with cast aluminum wheels, special wheel clamps are required to avoid damage to the wheel's finish.

The wheel studs and nuts are designed for specific wheel applications and must be replaced with equivalent parts.

All aluminum wheels have wheel mounting (lug) nuts with an enlarged nose. This enlarged nose is necessary to ensure proper retention of the wheels.

WHEELS (Continued)

DIAGNOSIS AND TESTING - WHEEL INSPECTION

Inspect wheels for:

- Excessive runout
- Dents, cracks or irregular bends
- Damaged wheel stud (lug) holes
- Air Leaks

NOTE: Do not attempt to repair a wheel by hammering, heating or welding.

If a wheel is damaged, an original equipment replacement wheel should be used. When obtaining replacement wheels, they must be equivalent in load carrying capacity. The diameter, width, offset, pilot hole and bolt circle of the wheel should be the same as the original wheel.

WARNING: FAILURE TO USE EQUIVALENT REPLACEMENT WHEELS MAY ADVERSELY AFFECT THE SAFETY AND HANDLING OF THE VEHICLE.

WARNING: REPLACEMENT WITH USED WHEELS IS NOT RECOMMENDED. THE SERVICE HISTORY OF THE WHEEL MAY HAVE INCLUDED SEVERE TREATMENT OR VERY HIGH MILEAGE. THE RIM COULD FAIL WITHOUT WARNING.

CLEANING

WHEEL AND WHEEL TRIM CARE

All wheels and wheel trim, especially aluminum and chrome plated, should be cleaned regularly using mild soap and water to maintain their luster and to prevent corrosion. Wash them with the same soap solution recommended for the body of the vehicle.

When cleaning extremely dirty wheels, care must be taken in the selection of tire and wheel cleaning chemicals and equipment to prevent damage to the wheels. Mopar® Wheel Treatment or Mopar® Chrome Cleaner is recommended. Any of the “DO NOT USE” items listed below can damage wheels and wheel trim.

DO NOT USE:

- Any abrasive cleaner
- Any abrasive cleaning pad (such as steel wool) or abrasive brush
- Any cleaner that contains an acid which can react with and discolor the chrome surface. **Many wheel cleaners contain acids that can harm the wheel surface.**
- Oven cleaner
- A car wash that uses carbide-tipped wheel cleaning brushes or acidic solutions.

SPECIFICATIONS

WHEEL

SPECIFICATIONS

DESCRIPTION	SPECIFICATION
Wheel Mounting (Lug) Nut Hex Size	19 mm
Wheel Mounting Stud Size	M12 x 1.5 mm

TORQUE SPECIFICATIONS

DESCRIPTION	N·m	Ft. Lbs.	In. Lbs.
TPM Sensor Mounting Nut	4	—	35
Wheel Mounting (Lug) Nut	135	100	—

WHEEL COVER

DESCRIPTION

This vehicle uses a bolt-on type wheel cover (Fig. 29).

This bolt-on wheel cover cannot be removed from the wheel until three of the five wheel mounting nuts shown are removed (Fig. 29). The bolt-on wheel cover can then be removed with the remaining two wheel nuts tightened in place.

REMOVAL

(1) Noting the location of the valve stem in relationship to the wheel mounting nuts, remove the three wheel mounting nuts securing the wheel cover to the wheel and hub (Fig. 29).

CAUTION: When removing the wheel cover, do not pry the wheel cover from the wheel. This can result in damage to the wheel cover. The wheel cover is removed by pulling it off the wheel by hand.

WHEEL COVER (Continued)

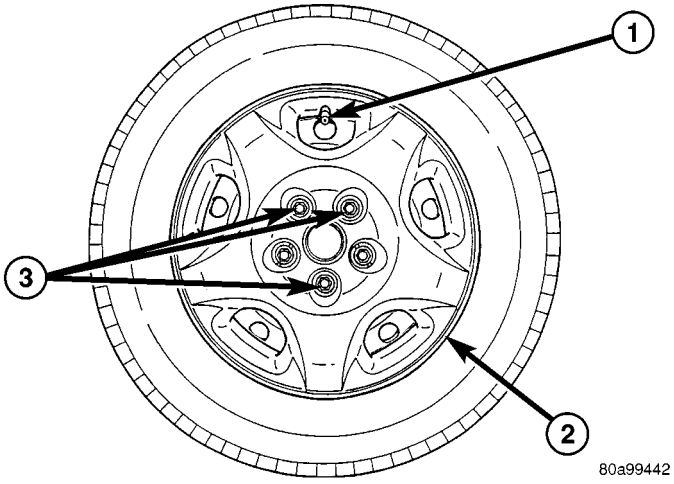

Fig. 29 Nuts Securing Wheel Cover

1 - VALVE STEM
2 - BOLT-ON WHEEL COVER
3 - NUTS SECURING WHEEL COVER

(2) Grasp the wheel cover at the edges in line with the remaining installed wheel nuts and pull straight outward from the wheel. This will pop the wheel cover retaining tabs over the two remaining wheel nuts, removing the wheel cover from the wheel.

INSTALLATION

NOTE: Wheel mounting nuts must be installed on the studs as shown to allow installation of the wheel cover (Fig. 30).

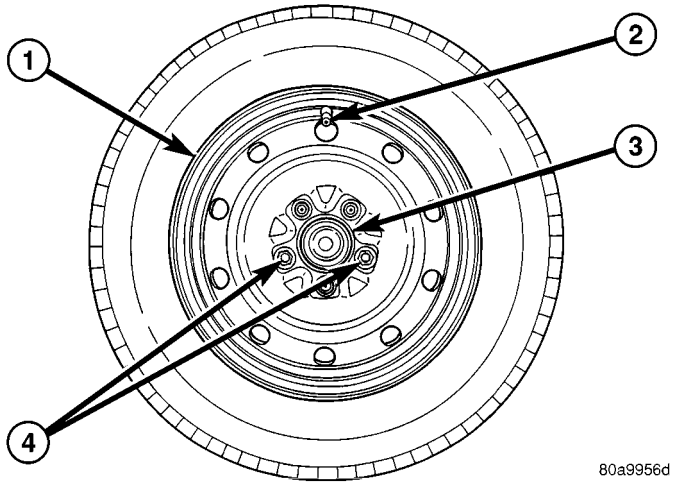

Fig. 30 Two Wheel Mounting Nuts Installed

1 - WHEEL
2 - VALVE STEM
3 - HUB PILOT
4 - NUTS

(1) Place the wheel cover on the wheel in the following fashion:

(a) Align the valve notch in the wheel cover with the valve stem on the wheel.

(b) At the same time, align the two holes in the wheel cover having the retaining tabs with the two installed wheel nuts (Fig. 31).

(c) Press in on center of wheel cover until wheel cover retaining tabs push past and engage rear of previously installed wheel mounting nuts (Fig. 31). This will hold the wheel cover in place.

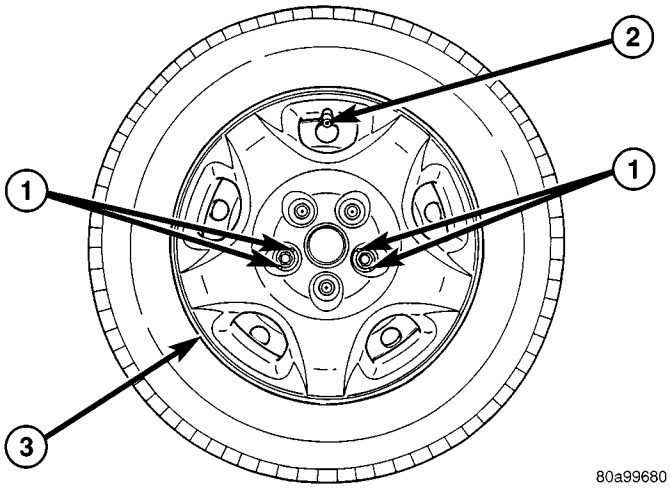

Fig. 31 Wheel Cover Installation Over Two Nuts

1 - RETAINING TABS
2 - VALVE STEM
3 - BOLT-ON WHEEL COVER

(2) Install and **lightly tighten** the three remaining wheel mounting nuts, securing the wheel cover in place (Fig. 29).

(3) Tighten all five wheel mounting nuts in the proper sequence (Fig. 32). Tighten wheel nuts to a torque of 135 N·m (100 ft. lbs.).

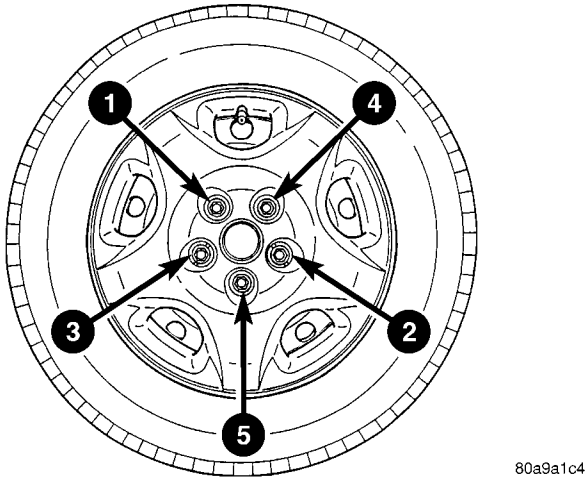

Fig. 32 Nut Tightening Sequence

WHEEL MOUNTING STUDS - FRONT

REMOVAL

NOTE: Before proceeding, (Refer to 5 - BRAKES - WARNING)(Refer to 5 - BRAKES - CAUTION).

CAUTION: Wheel mounting studs MUST NOT be hammered out of hub flange of hub and bearing assembly. If a stud is removed by hammering it out, damage to hub and bearing assembly will occur leading to premature bearing failure.

(1) Raise vehicle. (Refer to LUBRICATION & MAINTENANCE/HOISTING - STANDARD PROCEDURE)

(2) Remove front wheel and tire assembly. (Refer to 22 - TIRES/WHEELS - REMOVAL)

(3) Remove two adapter mounting bolts securing disc brake caliper adapter to steering knuckle (Fig. 33).

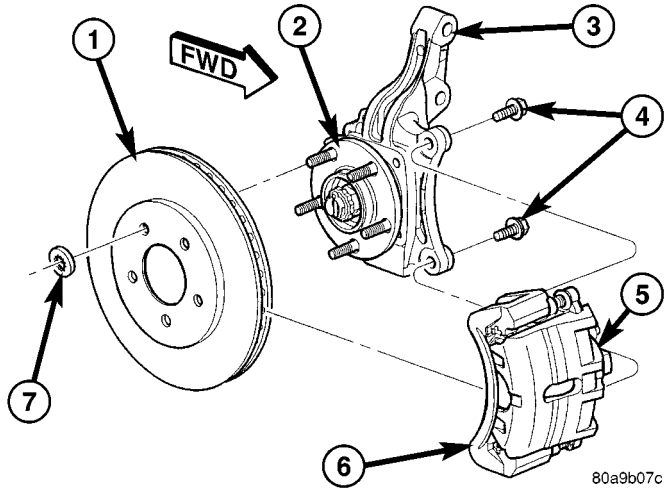

Fig. 33 Front Brake Mounting

1 - BRAKE ROTOR
2 - HUB AND BEARING
3 - STEERING KNUCKLE
4 - ADAPTER MOUNTING BOLTS
5 - BRAKE CALIPER
6 - ADAPTER
7 - CLIP

(4) Remove disc brake caliper and adapter as assembly from steering knuckle (Fig. 33). Hang assembly out of way using wire or a bungee cord. Use care not to overextend brake hose when doing this.

(5) Remove brake rotor from hub by pulling it straight off wheel mounting studs (Fig. 33).

(6) On wheel mounting stud to be removed, install a wheel mounting (lug) nut far enough so the threads on the stud are even with end of nut. Install Remover, Special Tool C-4150A, on hub and bearing flange and wheel stud (Fig. 34).

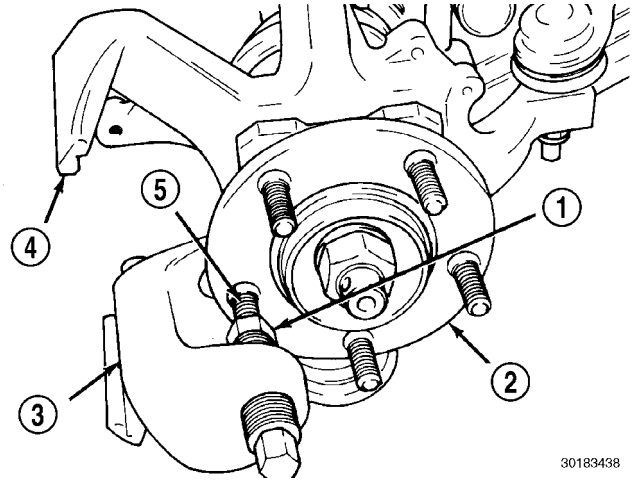

Fig. 34 Wheel Stud Removal (Typical)

1 - WHEEL MOUNTING (LUG) NUT
2 - HUB AND BEARING ASSEMBLY
3 - SPECIAL TOOL C-4150A
4 - STEERING KNUCKLE
5 - WHEEL STUD

(7) Tighten down on Remover, pushing wheel stud out of hub flange. Once shoulder of wheel stud is past flange, remove special tool. Remove nut from stud and remove stud from hub flange.

INSTALLATION

(1) Install replacement wheel stud into flange of hub and bearing from rear. Install washers on wheel stud, then install a standard type wheel mounting (lug) nut on stud with flat side of lug nut against washers as shown (Fig. 35).

(2) Tighten nut, pulling wheel stud into hub flange. Once head of stud is fully seated against rear of hub flange, remove nut and washers from stud.

(3) Install brake rotor back on hub and bearing (Fig. 33).

(4) Install brake caliper and adapter back over brake rotor aligning adapter with mounting holes on steering knuckle (Fig. 33).

(5) Install two adapter mounting bolts securing adapter to steering knuckle. Tighten mounting bolts to 169 N·m (125 ft. lbs.) torque.

(6) Install wheel and tire assembly. Tighten wheel mounting (lug) nuts in proper sequence to 135 N·m (100 ft. lbs.) torque.

(7) Lower vehicle.

WHEEL MOUNTING STUDS - FRONT (Continued)

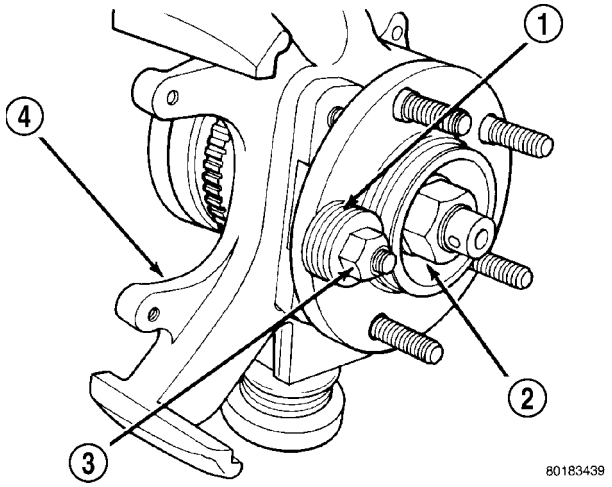

Fig. 35 Installing Wheel Stud (Typical)

1 - WASHERS
2 - HUB AND BEARING ASSEMBLY
3 - WHEEL MOUNTING (LUG) NUT
4 - STEERING KNUCKLE

(8) Road test vehicle to ensure proper operation of the brakes.

WHEEL MOUNTING STUDS - REAR

REMOVAL

CAUTION: If a wheel attaching stud needs to be replaced in the hub and bearing assembly the studs MUST NOT be hammered out of the hub flange. If a stud is removed by hammering it out of the bearing flange, damage to the hub and bearing assembly will occur leading to premature hub and bearing failure.

(1) Raise vehicle on jackstands or centered on a frame contact type hoist. See Hoisting in Lubrication and Maintenance.

(2) Remove the rear wheel and tire assembly.

(3) Remove the brake drum or disc brake caliper and rotor. Refer to Brakes.

(4) Install a lug nut on the wheel stud to be removed from the hub and bearing assembly (Fig. 36) so the threads on stud are even with end of lug nut. Install Remover, Special Tool C-4150A on hub and bearing assembly flange and wheel stud (Fig. 36).

(5) Tightening down on special tool will push wheel stud out of the hub and bearing assembly flange.

(6) Remove lug nut from stud and remove wheel stud from flange.

INSTALLATION

(1) Install replacement wheel stud into flange of hub and bearing assembly. Install washers on wheel stud, then install a wheel lug nut on stud with flat side of lug nut against washers (Fig. 37).

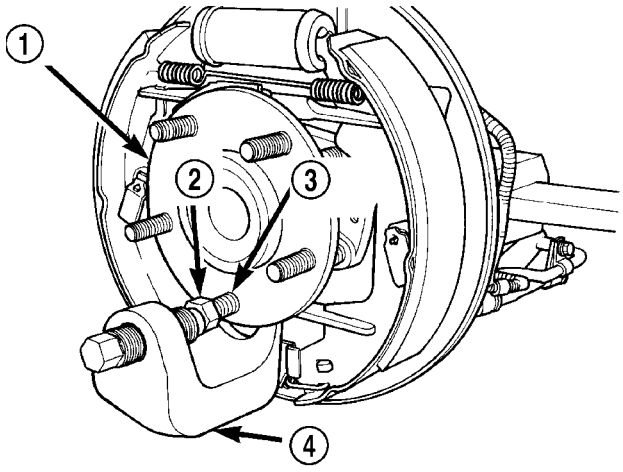

Fig. 36 Wheel Stud Removal From Hub And Bearing

1 - HUB AND BEARING ASSEMBLY
2 - WHEEL MOUNTING (LUG) NUT
3 - WHEEL STUD
4 - SPECIAL TOOL C-4150A

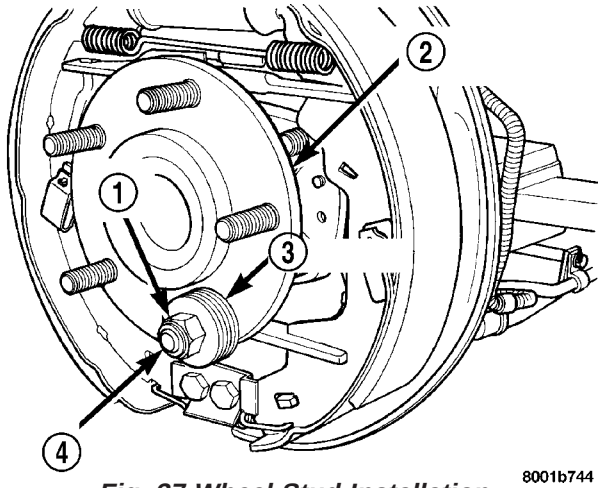

Fig. 37 Wheel Stud Installation

1 - WHEEL MOUNTING (LUG) NUT
2 - HUB AND BEARING ASSEMBLY
3 - WASHERS
4 - WHEEL STUD

(2) Tighten the wheel lug nut, pulling the wheel stud into the flange of the hub and bearing assembly. When the head of the stud is fully seated against the bearing flange, remove lug nut and washers from wheel stud.

(3) Install the brake drum or disc brake rotor and caliper on the hub and bearing assembly.

(4) Install wheel and tire assembly on vehicle. Tighten the wheel mounting stud nuts in proper sequence until all nuts are torqued to half specification. Then repeat the tightening sequence to the full specified torque of 135 N·m (100 ft. lbs.).

(5) Lower vehicle to the ground.

BODY

TABLE OF CONTENTS

	page
BODY	
DESCRIPTION - VEHICLE IDENTIFICATION	1
WARNING	
SAFETY PRECAUTIONS AND WARNINGS	1
DIAGNOSIS AND TESTING	
WATER LEAKS	1
WIND NOISE	2
STANDARD PROCEDURE	
STANDARD PROCEDURE - PLASTIC BODY PANEL REPAIR	3
STANDARD PROCEDURE - HEAT STAKING	9
SPECIFICATIONS	
TORQUE	10
BODY LUBRICATION	12
SPECIAL TOOLS	
BODY	13
DOOR - FRONT	14
DOORS - SLIDING	24
DECKLID/HATCH/LIFTGATE/TAILGATE	40
EXTERIOR	45
HOOD	62
INSTRUMENT PANEL	65
INTERIOR	78
PAINT	100
SEATS	102
STATIONARY GLASS	161
WEATHERSTRIP/SEALS	166
SUNROOF	169
BODY STRUCTURE	177

BODY

DESCRIPTION - VEHICLE IDENTIFICATION

Throughout this group, references to the DaimlerChrysler Corporation vehicle family identification code are used when describing a procedure that is unique to that vehicle. Refer to Introduction Group of this manual for detailed information on vehicle identification. If a procedure is common to all vehicles covered in this manual, no reference will be made to a vehicle family code.

WARNING

SAFETY PRECAUTIONS AND WARNINGS

WARNING: USE A OSHA APPROVED BREATHING FILTER WHEN SPRAYING PAINT OR SOLVENTS IN A CONFINED AREA. PERSONAL INJURY CAN RESULT.
AVOID PROLONGED SKIN CONTACT WITH PETROLEUM OR ALCOHOL – BASED CLEANING SOLVENTS. PERSONAL INJURY CAN RESULT.
DO NOT STAND UNDER A HOISTED VEHICLE THAT IS NOT PROPERLY SUPPORTED ON SAFETY STANDS. PERSONAL INJURY CAN RESULT.

CAUTION: When holes must be drilled or punched in an inner body panel, verify depth of space to the outer body panel, electrical wiring, or other components. Damage to vehicle can result.
Do not weld exterior panels unless combustible material on the interior of vehicle is removed from the repair area. Fire or hazardous conditions, can result.
Always have a fire extinguisher ready for use when welding.
Disconnect the negative (-) cable clamp from the battery when servicing electrical components that are live when the ignition is OFF. Damage to electrical system can result.
Do not use abrasive chemicals or compounds on painted surfaces. Damage to finish can result.
Do not use harsh alkaline based cleaning solvents on painted or upholstered surfaces. Damage to finish or color can result.
Do not hammer or pound on plastic trim panel when servicing interior trim. Plastic panels can break.

DIAGNOSIS AND TESTING

WATER LEAKS

Water leaks can be caused by poor sealing, improper body component alignment, body seam porosity, missing plugs, or blocked drain holes. Centrifugal and gravitational force can cause water to drip from a location away from the actual leak point, making leak detection difficult. All body sealing points should be water tight in normal wet-driving conditions. Water flowing downward from the front of

the vehicle should not enter the passenger or luggage compartment. Moving sealing surfaces will not always seal water tight under all conditions. At times, side glass or door seals will allow water to enter the passenger compartment during high pressure washing or hard driving rain (severe) conditions. Overcompensating on door or glass adjustments to stop a water leak that occurs under severe conditions can cause premature seal wear and excessive closing or latching effort. After completing a repair, water test vehicle to verify leak has stopped before returning vehicle to use.

VISUAL INSPECTION BEFORE WATER LEAK TESTS

Verify that floor and body plugs are in place, body drains are clear, and body components are properly aligned and sealed. If component alignment or sealing is necessary, refer to the appropriate section of this group for proper procedures.

WATER LEAK TESTS

WARNING: DO NOT USE ELECTRIC SHOP LIGHTS OR TOOLS IN WATER TEST AREA. PERSONAL INJURY CAN RESULT.

When the conditions causing a water leak have been determined, simulate the conditions as closely as possible.

- If a leak occurs with the vehicle parked in a steady light rain, flood the leak area with an open-ended garden hose.
- If a leak occurs while driving at highway speeds in a steady rain, test the leak area with a reasonable velocity stream or fan spray of water. Direct the spray in a direction comparable to actual conditions.
- If a leak occurs when the vehicle is parked on an incline, hoist the end or side of the vehicle to simulate this condition. This method can be used when the leak occurs when the vehicle accelerates, stops or turns. If the leak occurs on acceleration, hoist the front of the vehicle. If the leak occurs when braking, hoist the back of the vehicle. If the leak occurs on left turns, hoist the left side of the vehicle. If the leak occurs on right turns, hoist the right side of the vehicle. For hoisting recommendations (Refer to LUBRICATION & MAINTENANCE/HOISTING - STANDARD PROCEDURE).

WATER LEAK DETECTION

To detect a water leak point-of-entry, do a water test and watch for water tracks or droplets forming on the inside of the vehicle. If necessary, remove interior trim covers or panels to gain visual access to the leak area. If the hose cannot be positioned without being held, have someone help do the water test.

Some water leaks must be tested for a considerable length of time to become apparent. When a leak appears, find the highest point of the water track or drop. The highest point usually will show the point of entry. After leak point has been found, repair the leak and water test to verify that the leak has stopped.

Locating the entry point of water that is leaking into a cavity between panels can be difficult. The trapped water may splash or run from the cavity, often at a distance from the entry point. Most water leaks of this type become apparent after accelerating, stopping, turning, or when on an incline.

MIRROR INSPECTION METHOD

When a leak point area is visually obstructed, use a suitable mirror to gain visual access. A mirror can also be used to deflect light to a limited-access area to assist in locating a leak point.

BRIGHT LIGHT LEAK TEST METHOD

Some water leaks in the luggage compartment can be detected without water testing. Position the vehicle in a brightly lit area. From inside the darkened luggage compartment inspect around seals and body seams. If necessary, have a helper direct a drop light over the suspected leak areas around the luggage compartment. If light is visible through a normally sealed location, water could enter through the opening.

PRESSURIZED LEAK TEST METHOD

When a water leak into the passenger compartment cannot be detected by water testing, pressurize the passenger compartment and soap test exterior of the vehicle. To pressurize the passenger compartment, close all doors and windows, start engine, and set heater control to high blower in HEAT position. If engine can not be started, connect a charger to the battery to ensure adequate voltage to the blower. With interior pressurized, apply dish detergent solution to suspected leak area on the exterior of the vehicle. Apply detergent solution with spray device or soft bristle brush. If soap bubbles occur at a body seam, joint, seal or gasket, the leak entry point could be at that location.

WIND NOISE

Wind noise is the result of most air leaks. Air leaks can be caused by poor sealing, improper body component alignment, body seam porosity, or missing plugs in the engine compartment or door hinge pillar areas. All body sealing points should be airtight in normal driving conditions. Moving sealing surfaces will not always seal airtight under all conditions. At times, side glass or door seals will allow wind noise to be

noticed in the passenger compartment during high cross winds. Over compensating on door or glass adjustments to stop wind noise that occurs under severe conditions can cause premature seal wear and excessive closing or latching effort. After a repair procedure has been performed, test vehicle to verify noise has stopped before returning vehicle to use.

VISUAL INSPECTION BEFORE TESTS

Verify that floor and body plugs are in place and body components are aligned and sealed. If component alignment or sealing is necessary, refer to the appropriate section of this group for proper procedures.

ROAD TESTING WIND NOISE

(1) Drive the vehicle to verify the general location of the wind noise.

(2) Apply 50 mm (2 in.) masking tape in 150 mm (6 in.) lengths along weatherstrips, weld seams or moldings. After each length is applied, drive the vehicle. If noise goes away after a piece of tape is applied, remove tape, locate, and repair defect.

POSSIBLE CAUSE OF WIND NOISE

- Moldings standing away from body surface can catch wind and whistle.
- Gaps in sealed areas behind overhanging body flanges can cause wind-rushing sounds.
- Misaligned movable components.
- Missing or improperly installed plugs in pillars.
- Weld burn through holes.

STANDARD PROCEDURE

STANDARD PROCEDURE - PLASTIC BODY PANEL REPAIR

There are many different types of plastics used in today's automotive environment. We group plastics in three different categories: Rigid, Semi-Rigid, and Flexible. Any of these plastics may require the use of an adhesion promoter for repair. These types of plastic are used extensively on DaimlerChrysler Motors vehicles. Always follow repair material manufacturer's plastic identification and repair procedures.

Rigid Plastics:

Examples of rigid plastic use: Fascias, Hoods, Doors, and other Body Panels, which include SMC, ABS, and Polycarbonates.

Semi-Rigid Plastics:

Examples of semi-rigid plastic use: Interior Panels, Under Hood Panels, and other Body Trim Panels.

Flexible Plastics:

Examples of flexible plastic use: Fascias, Body Moldings, and upper and lower Fascia Covers.

Repair Procedure:

The repair procedure for all three categories of plastics is basically the same. The one difference is the material used for the repair. The materials must be specific for each substrate, rigid repair material for rigid plastic repair, semi-rigid repair material for semi-rigid plastic repair and flexible repair material for flexible plastic repair.

Adhesion Promoter/Surface Modifier:

Adhesion Promoters/Surface Modifiers are required for certain plastics. All three categories may have plastics that require the use of adhesion promoter/surface modifiers. Always follow repair material manufacturer's plastic identification and repair procedures.

SAFETY PRECAUTION AND WARNINGS

WARNING:

- **EYE PROTECTION SHOULD BE USED WHEN SERVICING COMPONENTS. PERSONAL INJURY CAN RESULT.**
- **USE AN OSHA APPROVED BREATHING MASK WHEN MIXING EPOXY, GRINDING, AND SPRAYING PAINT OR SOLVENTS IN A CONFINED AREA. PERSONAL INJURY CAN RESULT.**
- **AVOID PROLONGED SKIN CONTACT WITH RESIN, PETROLEUM, OR ALCOHOL BASED SOLVENTS. PERSONAL INJURY CAN RESULT.**
- **DO NOT VENTURE UNDER A HOISTED VEHICLE THAT IS NOT PROPERLY SUPPORTED ON SAFETY STANDS. PERSONAL INJURY CAN RESULT.**

NOTE:

- **When holes must be drilled or cut in body panels, verify locations of internal body components and electrical wiring. Damage to vehicle can result.**
- **Do not use abrasive chemicals or compounds on undamaged painted surfaces around repair areas. Damage to finish can result.**

BODY (Continued)

RIGID, SEMI-RIGID, AND FLEXIBLE PLASTIC PARTS TYPES

CODE	FAMILY NAME	COMMON TRADE NAME	TYPICAL APPLICATION
ASA	ACRYLONITRILE STYRENE ACRYLITE	LURAN S	CONSOLES, GRILLES
ABS	ACRYLONITRILE BUTADIENE STYRENE	TERLURAN	″A″ PILLARS, CONSOLES, GRILLES
ABS/PC	ABS/PC ALLOY	PULSE, PROLOY, BAYBLEND	DOORS, INSTRUMENT PANELS
ABS/PVC	ABS/PV ALLOY	PROLOY, PULSE, LUSTRAN, CYCLOVIN	DOOR PANELS, GRILLES, TRIM
BMC	BULK MOLDING COMPOUND	BMC	FENDER EXTENSIONS
EMA	EHTYLENE METHYL ACRYLATE/IONOMER	SURLYN, EMA, IONOMER	BUMPER GUARDS, PADS
METTON	METTON	METTON	GRILLES, KICK PANELS, RUNNING BOARDS
MPPO	MODIFIED POLYPHENYLENE OXIDE	MPPO	SPOILER ASSEMBLY
PA	POLYAMID	ZYTEL, VYDYNE, PA, MINLON	FENDERS, QUARTER PANELS
PET	THERMOPLASTIC POLYESTER	RYNITE	TRIM
PBT/PPO	PBT/PPO ALLOY	GERMAX	CLADDINGS
PBTP	POLYBUTYLENE THEREPTHALATE	PBT, PBTP, POCAN, VALOX	WHEEL COVERS, FENDERS, GRILLES
PBTP/EEBC	POLYBUTYLENE THEREPTHALATE/EEBC ALLOY	BEXLOY, ″M″, PBTP/EEBC	FASCIAS, ROCKER PANEL, MOLDINGS
PC	POLYCARBONATE	LEXAN, MERLON, CALIBRE, MAKROLON PC	TAIL LIGHT LENSES, IP TRIM, VALANCE PANELS
PC/ABS	PC/ABS ALLOY	GERMAX, BAY BLENDS, PULSE	DOORS, INSTRUMENT PANELS
PPO	POLYPHENYLENE OXIDE	AZDEL, HOSTALEN, MARLEX, PRFAX, NORYL, GTX, PPO	INTERIOR TRIM, DOOR PANELS, SPLASH SHIELDS, STEERING COLUMN SHROUD
PPO/PA	POLYPHENYLENE/ POLYAMID	PPO/PA, GTX 910	FENDERS, QUARTER PANELS
PR/FV	FIBERGLASS REINFORCED PLASTIC	FIBERGLASS, FV, PR/FV	BODY PANELS
PS	POLYSTYRENE	LUSTREX, STYRON, PS	DOOR PANELS, DASH PANELS
RTM	RESIN TRANSFER MOLDING COMPOUND	RTM	BODY PANELS
SMC	SHEET MOLDED COMPOUND	SMC	BODY PANELS
TMC	TRANSFER MOLDING COMPOUND	TMC	GRILLES

BODY (Continued)

CODE	FAMILY NAME	COMMON TRADE NAME	TYPICAL APPLICATION
UP	UNSATURATED POLYESTER (THERMOSETTING)	SMC, BMC, TMC, ZMC, IMC, XSMC, UP	GRILLE OPENING PANEL, LIFTGATES, FLARESIDE FENDERS, FENDER EXTENSIONS
EEBC	ETHER/ESTER BLOCKED CO-POLYMER	EEBC	BUMPERS
EEBC/PBTP	EEBC/POLYBUTYLENE TEREPTHALATE	EEBC, PBTP, BEXLOY	BUMPER, ROCKER PANELS
EMPP	ETHYLENE MODIFIED POLYPROPYLENE	EMPP	BUMPER COVERS
EPDM	ETHYLENE/ PROPROPYLENE DIENE MONOMER	EPDM, NORDEL, VISTALON	BUMPERS
EPM	ETHYLENE/ PROPROPYLENE CO-POLYMER	EPM	FENDERS
MPU	FOAM POLYURETHANE	MPU	SPOILERS
PE	POLYETHYLENE	ALATHON, DYLAN, LUPOLEN, MARLEX	-
PP	POLYPROPYLENE (BLENDS)	NORYL, AZDEL, MARLOX, DYLON, PRAVEX	INNER FENDER, SPOILERS, KICK PANELS,A-PILLARS, DOOR PANELS, B-PILLARS, QUARTER PANELS, SPORT BAR TRIM, LIFTGATE TRIM, DECKLID TRIM SCUFF PLATES, KICK PANELS, CONSOLES
PP/EPDM	PP/EPDM ALLOY	PP/EPDM	SPOILERS, GRILLES
PUR	POLYURETHANE	COLONELS, PUR, PU	FASCIAS, BUMPERS
PUR/PC	PUR/PC ALLOY	TEXIN	BUMPERS
PVC	POLYVINYL CHLORIDE	APEX, GEON, VINYLITE	BODY MOLDINGS, WIRE INSULATION, STEERING WHEELS
RIM	REACTION INJECTED MOLDED POLYURETHANE	RIM, BAYFLEX	FRONT FASCIAS, MODULAR WINDOWS
RRIM	REINFORCED REACTION INJECTED MOLDED	PUR, RRIM	FASCIAS, BODY PANELS, BODY TRIMS
TPE	THERMO POLYETHYLENE	TPE, HYTREL, BEXLOY-V	FASCIAS, BUMPERS, CLADDINGS
TPO	THERMOPOLYOLEFIN	POLYTROPE, RENFLEX, SANTOPRENE, VISAFLEX, ETA, APEX, TPO, SHIELDS, CLADDINGS	BUMPERS, END CAPS, TELCAR, RUBBER, STRIPS, SIGHT, INTERIOR B POST
TPP	THERMO-POLYPROPYLENE	TPP	BUMPERS
TPU	THERMOPOLYURETHANE, POLYESTER	TPU, HYTREL, TEXIN, ESTANE	BUMPERS, BODY SIDE, MOLDINGS, FENDERS, FASCIAS

BODY (Continued)

PANEL SECTIONING

If it is required to section a large panel for a plastic repair, it will be necessary to reinforce the panel (Fig. 1). To bond two plastic panels together, a reinforcement must overlap both panels. The panels must be "V'd" at a 20 degree angle. The area to be reinforced should be washed, then sanded. Be sure to wipe off any excess soap and water when finished. Lightly sand or abrade the plastic with an abrasive pad or sandpaper. Blow off any dust with compressed air or wipe with a clean dry rag.

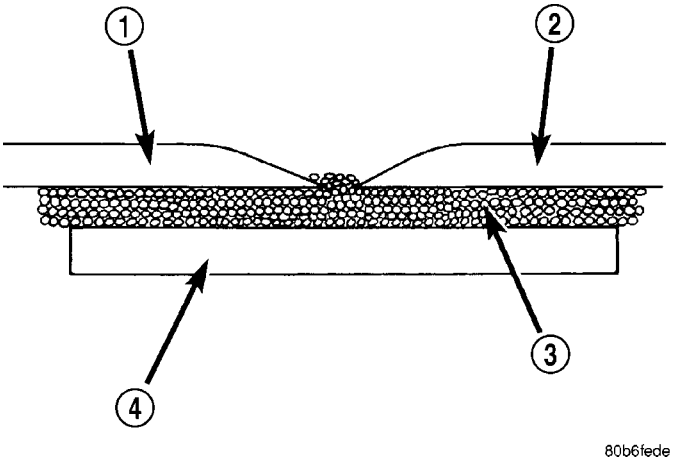

Fig. 1 PANEL SECTIONING

1 - EXISTING PANEL
2 - NEW PANEL
3 - PANEL ADHESIVE
4 - BONDING STRIP

When bonding plastic panels, Follow repair material manufacturers recommendations. Be sure that enough adhesive has been applied to allow squeeze out and to fill the full bond line. Once the pieces have been brought together, do not move them until the adhesive is cured. The assembly can be held together with clamps, rivets, etc. A faster cure can be obtained by heating with a heat lamp or heat gun. After the parts have been bonded and have had time to cure, rough sand the seam and apply the final adhesive filler to the area being repaired. Smooth the filler with a spreader, wooden tongue depressor, or squeegee. For fine texturing, a small amount of water can be applied to the filler surface while smoothing. The cured filler can be sanded as necessary and, as a final step, cleanup can be done with soapy water. Wipe the surface clean with a dry cloth allowing time for the panel to dry before moving on with the repair.

PANEL REINFORCEMENT

Structural repair procedures for rigid panels with large cracks and holes will require a reinforcement backing. Reinforcements can be made with several applications of glass cloth saturated with structural adhesive. Semi-rigid or flexible repair materials should be used for semi-rigid or flexible backing reinforcement (Fig. 2) and (Fig. 3). Open meshed fiberglass dry wall tape can be used to form a reinforcement. The dry wall tape allows the resin to penetrate through and make a good bond between the panel and the adhesive. Structurally, the more dry wall tape used, the stronger the repair.

Another kind of repair that can be done to repair large cracks and holes is to use a scrap piece of similar plastic and bond with structural adhesive. The reinforcement should cover the entire break and should have a generous amount of overlap on either side of the cracked or broken area.

When repairing plastic, the damaged area is first "V'd" out, or beveled. Large bonding areas are desirable when repairing plastic because small repairs are less likely to hold permanently. Beveling the area around a crack at a 20 degree angle will increase the bonding surface for a repair (Fig. 4). It is recommended that sharp edges be avoided because the joint may show through after the panel is refinished.

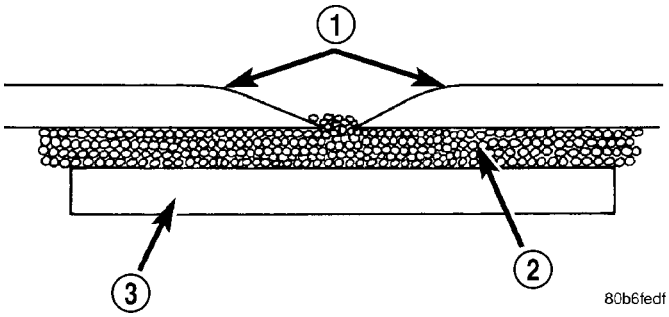

Fig. 2 SOFTENED EDGES

1 - SOFTENED EDGES
2 - PANEL ADHESIVE
3 - BONDING STRIP

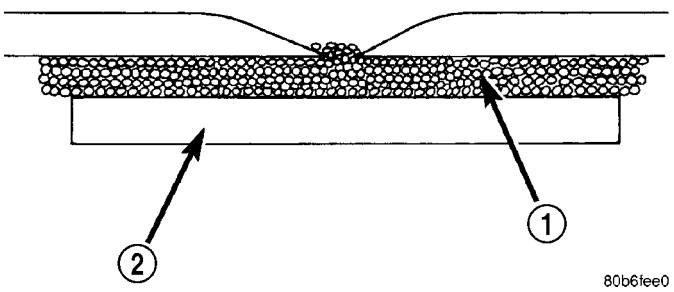

Fig. 3 PANEL REINFORCEMENT

1 - PANEL ADHESIVE
2 - REINFORCEMENT

BODY (Continued)

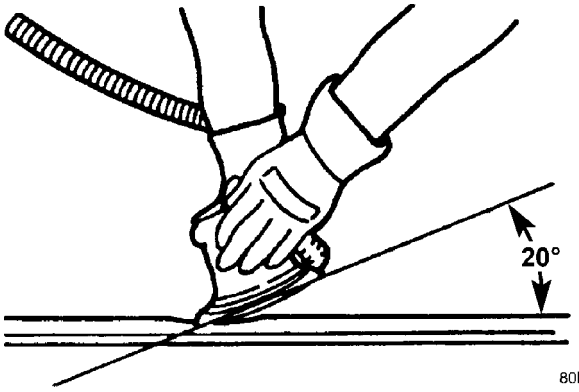

Fig. 4 BEVELING ANGLE - 20 DEGREE

- Panel repair for both flexible and rigid panels are basically the same. The primary difference between flexible panel repair and rigid panel repair is in the adhesive materials used (Fig. 5).
- The technician should first decide what needs to be done when working on any type of body panel. One should determine if it is possible to return the damage part to its original strength and appearance without exceeding the value of the replacement part.
- When plastic repairs are required, it is recommended that the part be left on the vehicle when every possible. That will save time, and the panel will remain stationary during the repair. Misalignment can cause stress in the repair areas and can result in future failure.

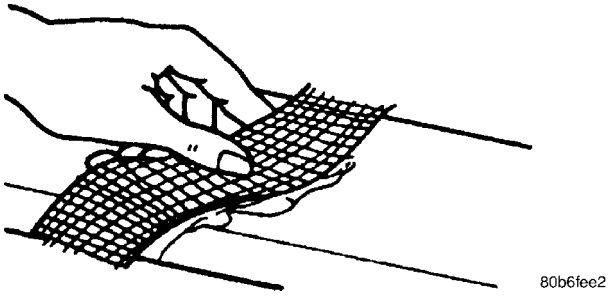

Fig. 5 FIBERGLASS TAPE

VISUAL INSPECTION

Composite materials can mask the severity of an accident. Adhesive bond lines, interior structure of the doors, and steel structures need to be inspected carefully to get a true damage assessment. Close inspection may require partial removal of interior trim or inner panels.

Identify the type of repair: Puncture or Crack - Damage that has penetrated completely through the panel. Damage is confined to one general area; a panel section is not required. However, a backer panel, open fiberglass tape, or matted material must be bonded from behind (Fig. 7) (Fig. 6).

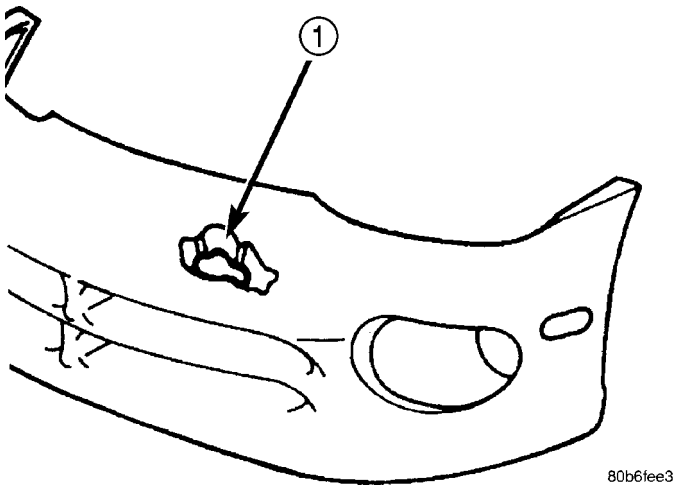

Fig. 6 DAMAGE COMPONENT

1 - PUNCTURE

PANEL SURFACE PREPARATION

If a body panel has been punctured, cracked, or crushed, the damaged area must be removed from the panel to achieve a successful repair. All spider web cracks leading away from a damaged area must be stopped or removed. To stop a running crack in a panel, drill a 6 mm (0.250 in.) hole at the end of the crack farthest away from the damage. If spider web cracks can not be stopped, the panel would require replacement. The surfaces around the damaged area should be stripped of paint and freed from wax and oil. Scuff surfaces around repair area with 360 grit wet/dry sandpaper, or equivalent, to assure adhesion of repair materials.

PATCHING PANELS

An panel that has extensive puncture type damage can be repaired by cutting out the damaged material (Fig. 7). Use a suitable reciprocating saw or cut off wheel to remove the section of the panel that is damaged. The piece cut out can be used as a template to shape the new patch. It is not necessary to have access to the back of the panel to install a patch. Bevel edges of cutout at 20 degrees to expose a larger bonding area on the outer side. This will allow for an increased reinforcement areas.

PANEL PATCH FABRICATIONS

A patch can be fabricated from any rigid fiberglass panel that has comparable contour with the repair area. Lift gates and fenders can be used to supply patch material. If existing material is not available or compatible, a patch can be constructed with adhesive and reinforcement mesh (dry wall tape). Perform the following operation if required:

BODY (Continued)

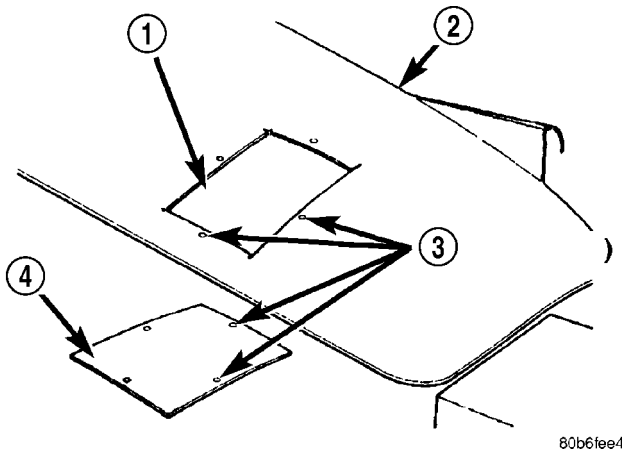

Fig. 7 DAMAGED PANEL CUTOUT AND PATCH

1 - CUTOUT
2 - DAMAGED BODY PANEL
3 - 4 MM (0.160 IN.) HOLES
4 - PATCH CUT TO SIZE

(1) Cover waxed paper or plastic with adhesive backed nylon mesh (dry wall tape) larger than the patch required (Fig. 8).

(2) Tape waxed paper or plastic sheet with mesh to a surface that has a compatible contour to the repair area.

(3) Apply a liberal coat of adhesive over the reinforcement mesh (Fig. 8). If necessary apply a second or third coat of adhesive and mesh after first coat has cured. The thickness of the patch should be the same as the repair area.

(4) After patch has cured, peel waxed paper or plastic from the back of the patch.

(5) If desired, a thin film coat of adhesive can be applied to the back of the patch to cover mesh for added strength.

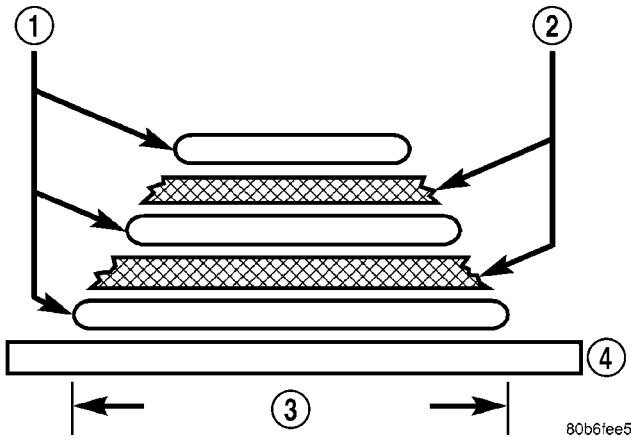

Fig. 8 FABRICATED PANEL

1 - STRUCTURAL ADHESIVE
2 - FIBERGLASS CLOTH OR FIBERGLASS MESH TAPE
3 - WIDTH OF V-GROOVE
4 - WAXED PAPER

PANEL PATCH INSTALLATION

(1) Make a paper or cardboard pattern the size and shape of the cutout hole in the panel.

(2) Trim 3 mm (0.125 in.) from edges of pattern so patch will have a gap between connecting surfaces.

(3) Using the pattern as a guide, cut the patch to size.

(4) Cut scrap pieces of patch material into 50 mm (2 in.) squares to use as patch supports to sustain the patch in the cutout.

(5) Drill 4 mm (0.160 in.) holes 13 mm (0.5 in.) in from edge of cutout hole (Fig. 7).

(6) Drill 4 mm (0.160 in.) holes 13 mm (0.5 in.) away from edge of patch across from holes drilled around cutout.

(7) Drill 3 mm (0.125 in.) holes in the support squares 13 mm (0.5 in.) from the edge in the center of one side.

(8) Scuff the backside of the body panel around the cutout hole with a scuff pad or sandpaper.

(9) Mix enough adhesive to cover one side of all support squares.

(10) Apply adhesive to cover one side of all support squares.

(11) Using number 8 sheet metal screws, secure support squares to back side of body panel with adhesive sandwiched between the panel and squares (Fig. 9).

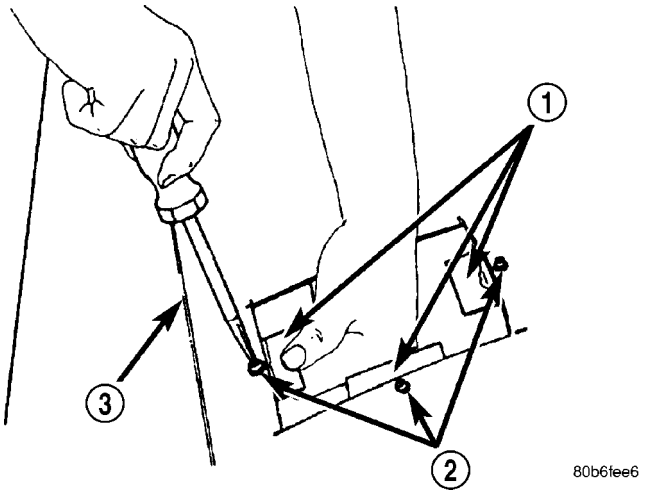

Fig. 9 SECURE SUPPORT SQUARES TO BODY PANEL

1 - SUPPORT SQUARES
2 - SCREWS
3 - DAMAGED BODY PANEL

(12) Position patch in cutout against support squares and adjust patch until the gap is equal along all sides (Fig. 10).

(13) Drill 3 mm (0.125 in.) holes in the support squares through the pre-drilled holes in the patch.

(14) Apply a coat of adhesive to the exposed ends of the support squares (Fig. 11).

BODY (Continued)

(15) Install screws to hold the patch to support squares (Fig. 12). Tighten screws until patch surface is flush with panel surface.

(16) Allow adhesive to cure, and remove all screws.

(17) Using a 125 mm (5 in.) 24 grit disc grinder, grind a 50 mm (2 in.) to 75 mm (3 in.) wide and 2 mm (0.080 in.) deep path across the gaps around the patch (Fig. 13). With compressed air, blow dust from around patch.

(18) Apply adhesive backed nylon mesh (dry wall tape) over gaps around patch (Fig. 14).

(19) Mix enough adhesive to cover the entire patch area.

(20) Apply adhesive over the mesh around patch, and smooth epoxy with a wide spreader to reduce finish grinding. Use two to three layers of mesh and adhesive to create a stronger repair (Fig. 15).

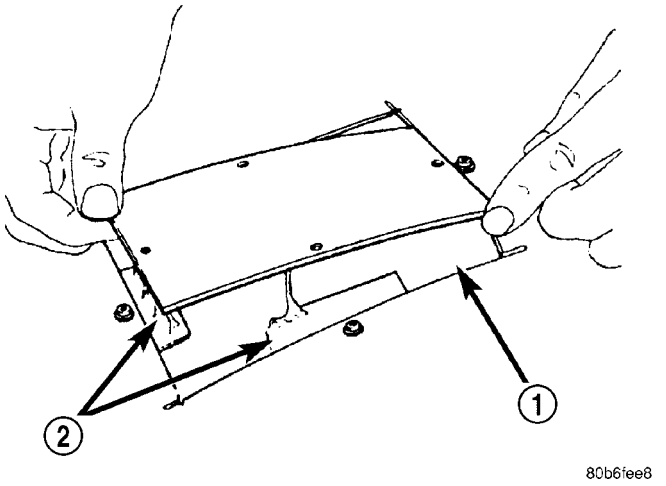

Fig. 10 POSITION PATCH IN CUTOUT AND ALIGN

1 - CUTOUT
2 - SUPPORT SQUARES

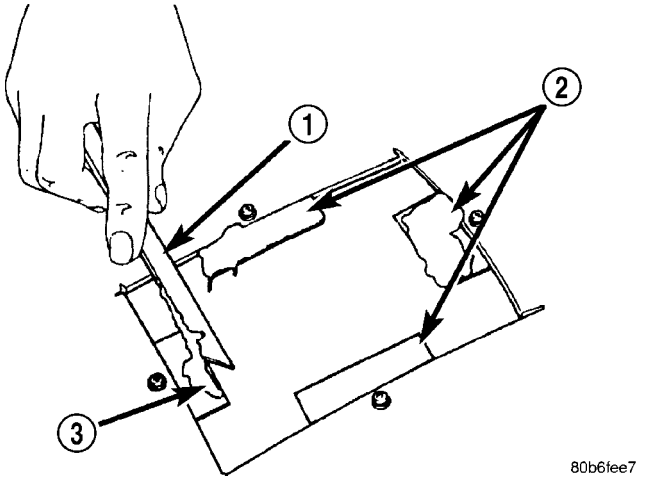

Fig. 11 APPLY ADHESIVE TO SUPPORT SQUARES

1 - APPLICATOR
2 - SUPPORT SQUARES
3 - ADHESIVE

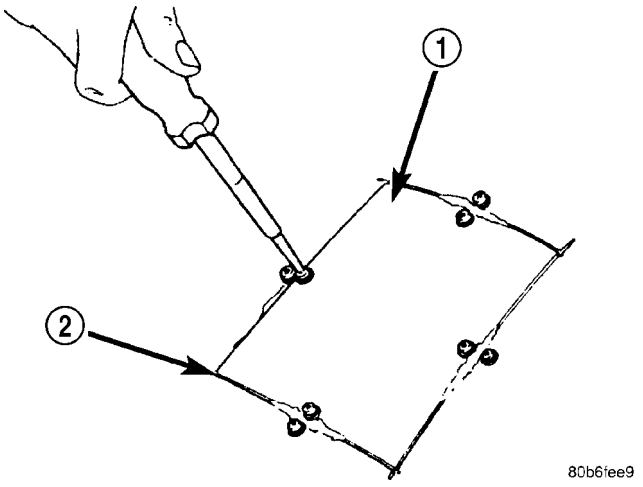

Fig. 12 INSTALL SCREWS

1 - PATCH
2 - GAP

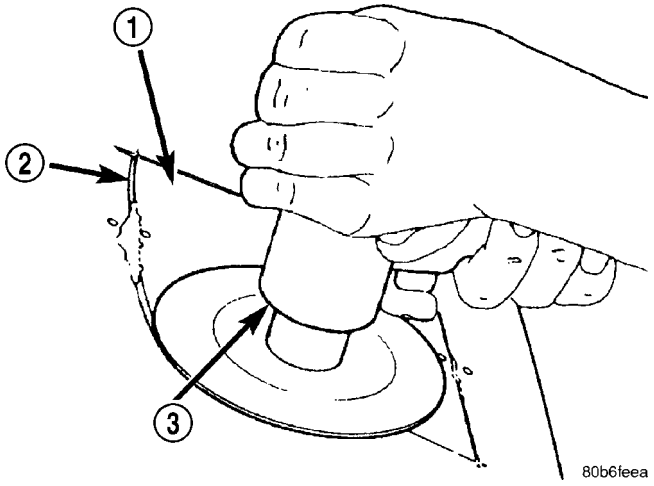

Fig. 13 GRIND SURFACE

1 - PATCH
2 - GAP
3 - DISC GRINDER

PATCHED PANEL SURFACING

After patch panel is installed, the patch area can be finished using the same methods as finishing other types of body panels. If mesh material is exposed in the patched area, grind surface down, and apply a coat of high quality rigid plastic body filler. Prime, block sand, and paint as required.

STANDARD PROCEDURE - HEAT STAKING

(1) Remove trim panel.

(2) Bend or move the trim panel components at the heat staked joints. Observe the heat staked locations and/or component seams for looseness.

(3) Heat stake the components.

BODY (Continued)

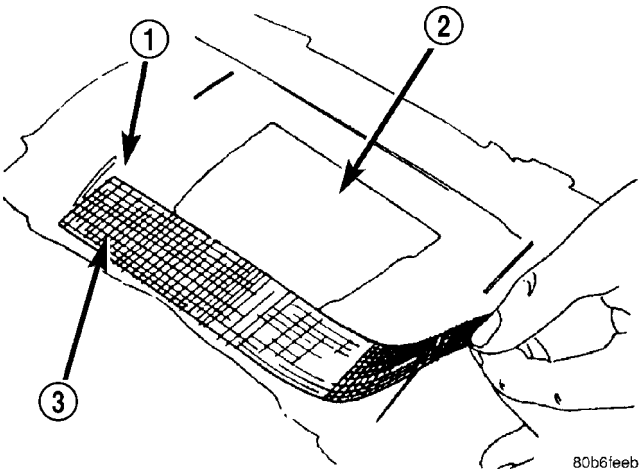

Fig. 14 COVER GAPS WITH MESH

1 - GROUND DOWN AREA
2 - PATCH
3 - MESH

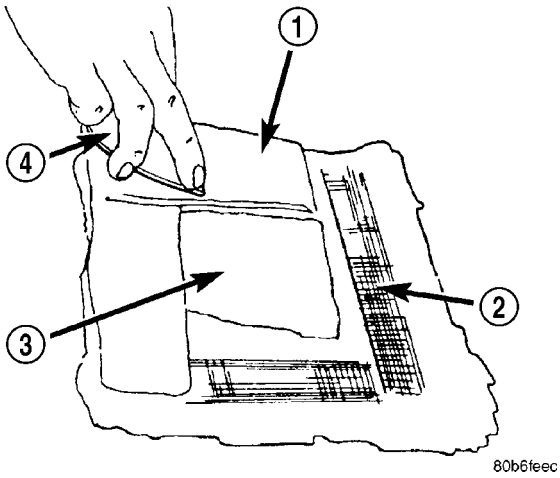

Fig. 15 COVER MESH WITH ADHESIVE

1 - ADHESIVE
2 - MESH
3 - PATCH
4 - SPREADER

(a) If the heat staked or component seam location is loose, hold the two components tightly together and using a soldering gun with a flat tip, melt the material securing the components together. Do not over heat the affected area, damage to the exterior of the trim panel may occur.

(b) If the heat staked material is broken or missing, use a hot glue gun to apply new material to the area to be repaired. The panels that are being heat staked must be held together while the applying the glue. Once the new material is in place, it may be necessary to use a soldering gun to melt the newly applied material. Do not over heat the affected area, damage to the exterior of the trim panel may occur.

(4) Allow the repaired area to cool and verify the repair.

(5) Install trim panel.

SPECIFICATIONS

TORQUE

TORQUE SPECIFICATIONS

DESCRIPTION	N·m	Ft. Lbs.	In. Lbs.
All seat belt anchor bolts	39	29	—
Armrest shoulder bolt	29	21	—
Bench seat riser bolts	48	35	—
Bench seat track nuts	48	35	—
Quad bucket seat track to cushion frame bolts	40	30	—
Bucket seat back pivot bolts	33	24	—
Center seat to seat track bolts	24	17	—
Child seat module screws (bench seats)	7	—	62
Child seat module screws (quad seats)	13.5	10	—
Crossmember to radiator closure panel bolts	28	21	—
Door check strap to door end frame	12	—	105
Door latch to door end frame bolts	10	—	89
Floor latch to seat cushion frame bolts	27	19	—

BODY (Continued)

DESCRIPTION	N·m	Ft. Lbs.	In. Lbs.
Front cover to seat track screws	4	—	32
Front door hinge to hinge pillar bolts	34	25	—
Front door hinge to door nuts and bolts	34	25	—
Front door latch striker bolts	28	21	—
Front/quad seat cushion bolts	28.5	21	—
Front seat belt retractor bolts	38	28	—
Front seat riser to floor nuts	60	44	—
Front seat track cover screws	4	—	35
Front seat riser to seat track nuts	81	60	—
Front seatback pivot bolts	54	40	—
Front seatback recliner nut	12	—	105
Front seatback assist strap screws	2.5	—	22
Grocery bag holder screws	2	—	17
Hinge to liftgate bolts	33	24	—
Hood latch to bolts	13.5	10	—
Hood latch striker bolts	13.5	10	—
Hood hinge to hood bolts	13.5	10	—
Liftgate exterior handle outer screws	20	15	—
Liftgate exterior handle inner bolts	40	30	—
Lifgate hinge to roof header bolts	33	24	—
Liftgate latch bolts	16	12	—
Liftgate latch striker bolts	28	21	—
Liftgate lift motor link to liftgate	28	21	—
Liftgate spoiler bolts	9	—	80
Lifgate stabilizer wedge striker to D-pillar bolts	3	—	30
Luggage rack crossbar fasteners	4	—	35
Lumbar support handle screw	1	—	9
Pivot bolt to the body half of hood hinge	28	21	—
Prop assembly to lifgate bolts	28	21	—
Rear door glass to regulator bolt	11	8	—
Rear door hinge to B-pillar bolt	28	20	—
Rear door hinge to door bolt	28	20	—
Rear door latch striker	28	20	—
Rear latch to sliding door end frame	28	20	—
Rear seat back to seat cushion bolt	27	19	—
Recliner to seat back frame	12	9	—
Seatback frame upper rail	8	—	71
Seatback hinge bolt	48	35	—
Seatback hinge cover screws	2.3	—	20
Shoulder belt turning loop onto height adjuster	39	29	—
Side view mirror bolts	10	—	85
Sliding door center hinge adjusting bolt	15	—	130

BODY (Continued)

DESCRIPTION	N·m	Ft. Lbs.	In. Lbs.
Sliding door glass nuts	3.4	—	30
Sliding door latch striker	28	21	—
Sliding door to roller arm bracket	12	9	—
Storage bin track guide to seat riser	3.5	—	31
Sunroof opening panel to lifter arm screws	5		44
Sunroof opening panel motor screws	4		35
Sunroof trough bracket to roof bolts	6		53
Sunroof trough to trough bracket bolts	6		53
Sunroof trough bracket bolts	6		53
Support cylinders to liftgate	28	21	—

BODY LUBRICATION

LUBRICATION REQUIREMENTS

Body mechanisms and linkages should be inspected, cleaned, and lubricated, as required, to maintain ease of operation and to provide protection against rust and wear. When performing other under hood services, the hood latch release mechanism and safety catch should be inspected, cleaned, and lubricated. During the winter season, external door lock cylinders should be lubricated to assure proper operation when exposed to water and ice.

Prior to the application of any lubricant, the parts concerned should be wiped clean to remove dust and grit. If necessary, a suitable solvent can be used to clean the item to be lubricated. After lubricating a component, any excess oil or grease should be removed.

LUBRICANT APPLICATION

DOOR LOCK CYLINDERS

(1) Apply a small amount of lubricant directly into the lock cylinder.

(2) Apply a small amount of lubricant to the key.

(3) Insert key into lock cylinder and cycle the mechanism from the locked to the unlocked position.

NOTE: Do not add more lubricant.

(4) Cycle the lock cylinder mechanism several times to allow the lubricant to flow throughout the cylinder.

(5) Wipe all lubricant from exterior of lock cylinder and key.

ALL OTHER BODY MECHANISMS

(1) Clean component as described above.

(2) Apply specified lubricant to all pivoting and sliding contact areas of component.

LUBRICANT USAGE

ENGINE OIL

- Door Hinges – Hinge Pin and Pivot Contact Areas
- Hood Hinges – Pivot Points
- Liftgate Hinges

MOPAR® SPRAY WHITE LUBE OR EQUIVALENT

- Door Check Straps
- Liftgate Latches
- Liftgate Prop Pivots
- Ash Receiver
- Fuel Filler Door Remote Control Latch Mechanism
- Parking Brake Mechanism
- Sliding Seat Tracks
- Liftgate Latch

MOPAR® Multipurpose GREASE OR EQUIVALENT

- All Other Hood Mechanisms

MOPAR® LOCK CYLINDER LUBRICANT OR EQUIVALENT

- Door Lock Cylinders
- Liftgate Lock Cylinder

BODY (Continued)

SPECIAL TOOLS

BODY

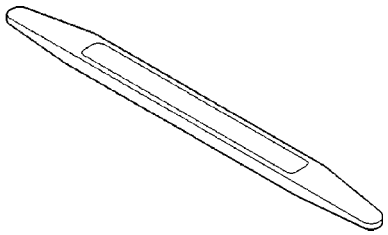

Trim Stick C-4755

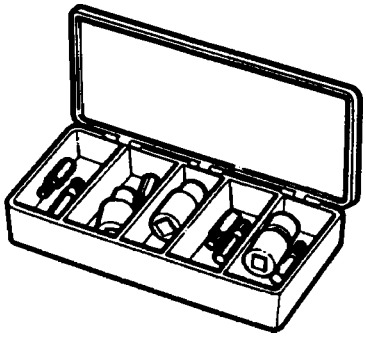

TORX BIT SET C-4794-B

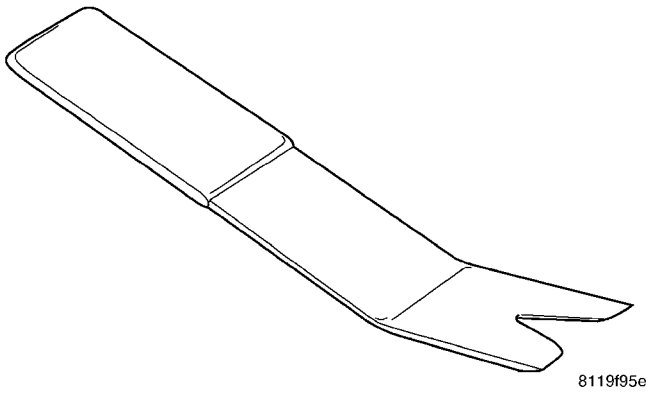

REMOVER, MOLDINGS C-4829-A

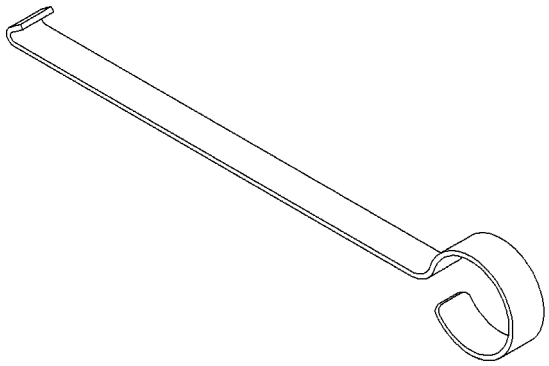

Fig. 16 Outer Belt Molding Remover - 9093

DOOR - FRONT

TABLE OF CONTENTS

page

APPLIQUE
REMOVAL 14
INSTALLATION 14
CHECK STRAP
REMOVAL 15
INSTALLATION 15
DOOR
REMOVAL 15
INSTALLATION 15
DOOR GLASS
REMOVAL 16
INSTALLATION 17
FRAME CLOSEOUT MOLDING
REMOVAL – A-PILLAR-HEADER, OR B-PILLAR . 17
INSTALLATION – A-PILLAR-HEADER, OR B-PILLAR 17
HINGE
REMOVAL 17
INSTALLATION 18
LATCH
REMOVAL 18
INSTALLATION 18
LATCH STRIKER
REMOVAL 19
INSTALLATION 19
LOCK CYLINDER
REMOVAL 19
INSTALLATION 19
TRIM PANEL
REMOVAL 20
INSTALLATION 20
WATERSHIELD
REMOVAL 21
INSTALLATION 21
WINDOW CRANK
REMOVAL 21
INSTALLATION 21
EXTERIOR HANDLE
REMOVAL 21
INSTALLATION 22
WINDOW REGULATOR - POWER
REMOVAL 22
INSTALLATION 22
WINDOW REGULATOR - MANUAL
REMOVAL 22
INSTALLATION 23

APPLIQUE

REMOVAL

(1) Roll door glass down.
(2) Remove outer door belt molding.
(3) Disengage clips holding front edge of applique to door frame.
(4) Remove applique from vehicle (Fig. 1).

INSTALLATION

(1) Position applique on vehicle.
(2) Hook rear edge of applique over rear edge of door frame and seat applique bottom edge on sheet metal.
(3) Engage clips to hold front edge of applique to door frame.
(4) Install outer door belt molding.

APPLIQUE (Continued)

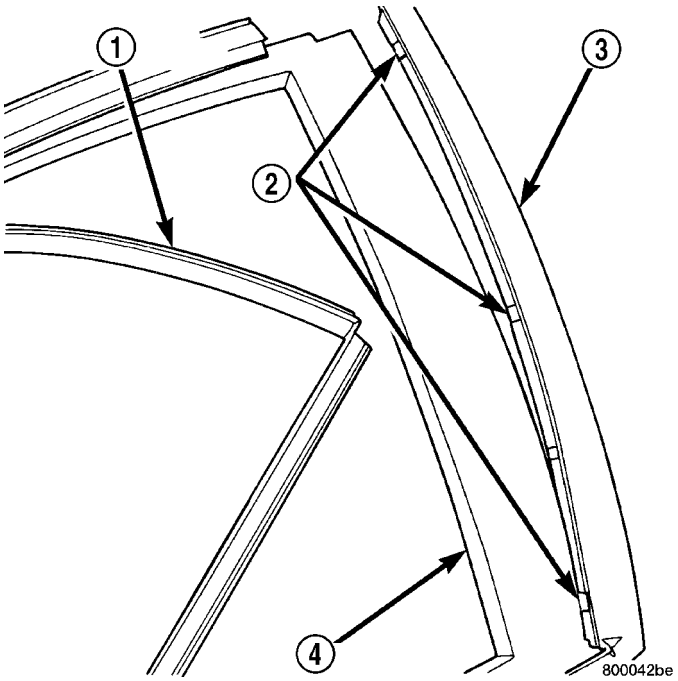

Fig. 1 FRONT DOOR APPLIQUE

1 - GLASS RUN WEATHERSTRIP
2 - CLIPS
3 - APPLIQUE
4 - FRONT DOOR

CHECK STRAP

REMOVAL

(1) Remove front door trim panel.
(2) Remove front door watershield (Refer to 23 - BODY/DOOR - FRONT/WATERSHIELD - REMOVAL).
(3) Remove front door speaker, if equipped.
(4) Remove bolts attaching door check strap to A-pillar.
(5) Remove nuts attaching check strap to door end frame (Fig. 2).
(6) Remove check strap from door through speaker hole.

INSTALLATION

(1) Position check strap on door through speaker hole.
(2) Install nuts to attach check strap to door end frame. Tighten nuts to 11 N·m (90 in. lbs.) torque.
(3) Install bolts to attach check strap to A-pillar. Tighten bolts to 12 N·m (105 in. lbs.) torque.
(4) Install door speaker, if equipped.
(5) Install front door trim panel.

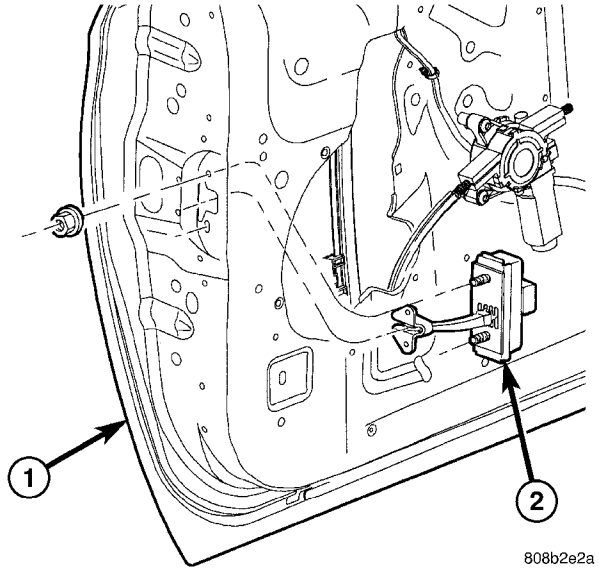

Fig. 2 FRONT DOOR CHECK STRAP

1 - FRONT DOOR
2 - DOOR CHECK STRAP

DOOR

REMOVAL

(1) Remove front wheelhouse splash shield. (Refer to 23 - BODY/EXTERIOR/LF WHEELHOUSE SPLASH SHIELD - REMOVAL)
(2) Disengage clips attaching door harness wire connector to inner fender brace.
(3) Disconnect positive lock slide on the side of the wire connectors (Fig. 3).
(4) Depress lock tab attaching wire connector halves together.
(5) Disconnect door harness from body wiring harness.
(6) Remove bolts attaching door check strap to A-pillar (Fig. 4).
(7) Support door on suitable lifting device.
(8) Remove bolts attaching lower hinge to door end frame (Fig. 5).
(9) Steady door on lifting device and remove bolts attaching upper hinge to door end frame.
(10) Remove door from vehicle.

INSTALLATION

NOTE: If new hinge pins are to be used, verify that the knurling on the hinge pin is aligned with the knurling on in the door hinge prior to driving in the pin. Also, verify that the hinge pin is fully seated to the door hinge and a new retaining clip is installed.

(1) Support door on suitable lifting device.

DOOR (Continued)

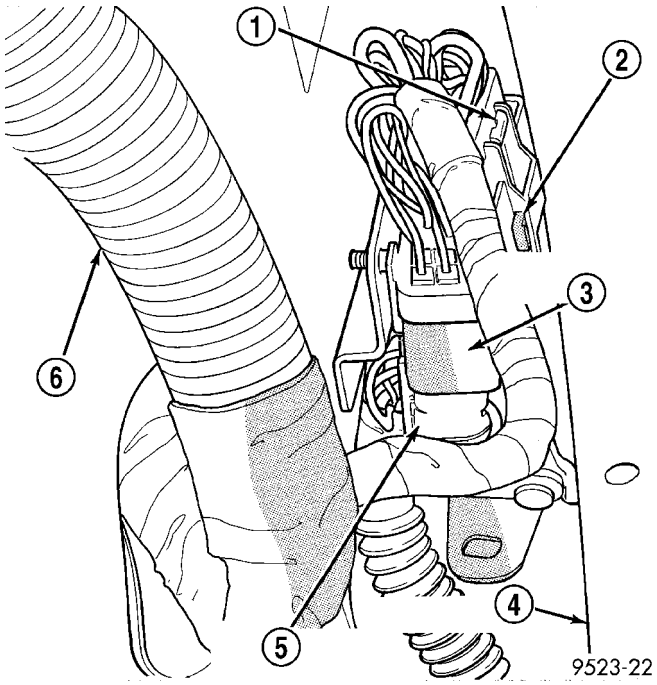

Fig. 3 FRONT DOOR WIRE CONNECTORS

1 - LOCK TAB
2 - POSITIVE LOCK
3 - BODY HARNESS CONNECTOR
4 - FRONT FENDER
5 - DOOR HARNESS CONNECTOR
6 - BODY HARNESS

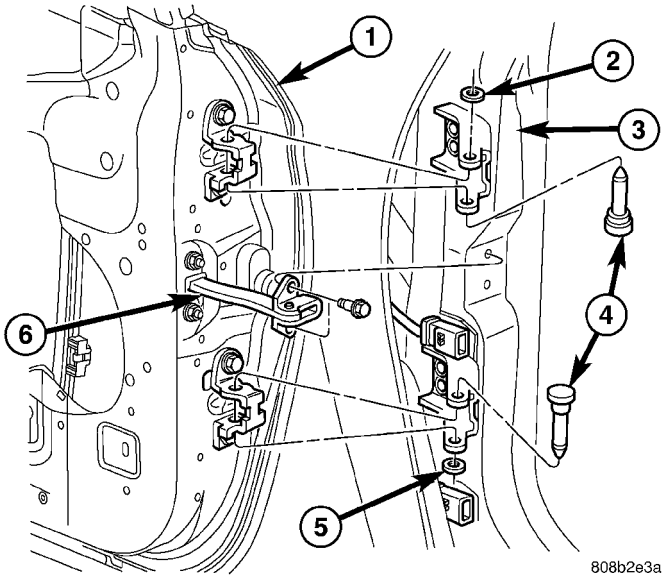

Fig. 4 FRONT DOOR - HINGE PIN REMOVAL

1 - FRONT DOOR
2 - CLIP
3 - A-PILLAR
4 - HINGE PIN
5 - CLIP
6 - DOOR CHECK STRAP

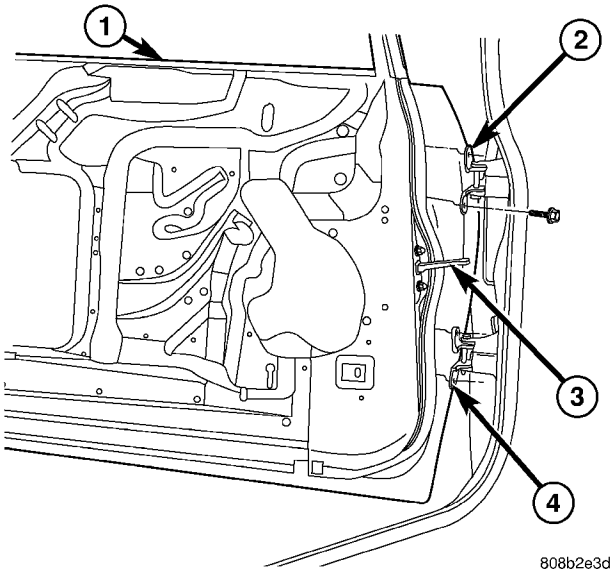

Fig. 5 FRONT DOOR - HINGE BOLT REMOVAL

1 - FRONT DOOR
2 - UPPER HINGE
3 - CHECK STRAP
4 - LOWER HINGE

(2) Position door to vehicle. Verify net pierce nubbin is engaged if reusing original hinges. Applies to body half of hinge only.

(3) Steady door on lifting device and install bolts attaching upper hinge to door end frame. Tighten bolts to 34 N·m (25 ft. lbs.) torque.

(4) Install bolts attaching lower hinge to door end frame. Tighten bolts to 34 N·m (25 ft. lbs.) torque. Align door to achieve equal spacing to surrounding body panels. Panels should be flush across all gaps.

(5) Install bolts attaching door check strap to A-pillar. Tighten bolts to 12 N·m (105 in. lbs.) torque.

(6) Connect door harness into body wiring harness.

(7) Connect positive lock slide on the side of the wire connectors.

(8) Connect clips attaching door harness wire connector to inner fender brace.

(9) Install front wheelhouse splash shield.

(10) Verify door operation and alignment. Adjust as necessary.

DOOR GLASS

REMOVAL

(1) Remove watershield. (Refer to 23 - BODY/DOOR - FRONT/WATERSHIELD - REMOVAL)

(2) Remove inner belt molding.(Refer to 23 - BODY/WEATHERSTRIP/SEALS/FDR INNER BELT WEATHERSTRIP - REMOVAL)

DOOR GLASS (Continued)

(3) Position glass to gain access to front and rear regulator lift plates through front and rear access holes in door panel.

(4) Loosen two screws on regulator clamping glass (Fig. 6).

(5) Remove glass from regulator lift plates.

(6) Disengage glass from glass run weatherstrip.

(7) Insert front of glass between glass run channel and outer door panel.

(8) Lift glass upward and out of exterior side of the opening at top of door (Fig. 7).

(9) Remove glass from vehicle.

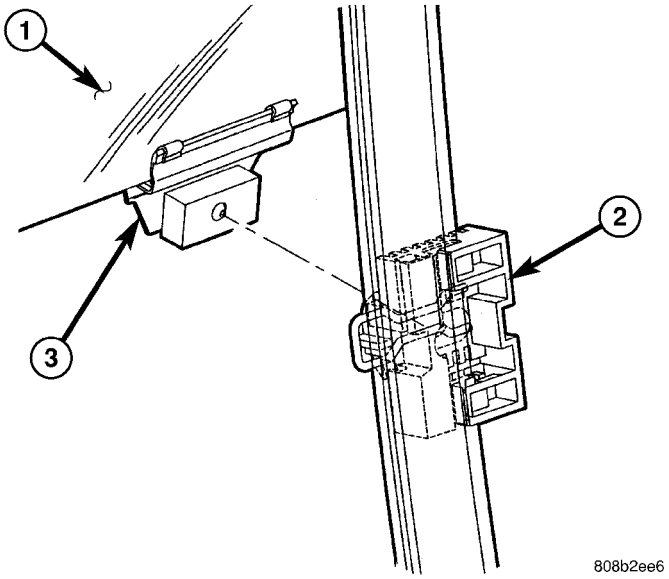

Fig. 6 FRONT DOOR GLASS CLIPS

1 - DOOR GLASS
2 - REGULATOR GLASS CLAMP ASSEMBLY
3 - GLASS LIFT PLATE

INSTALLATION

(1) Ensure clamp opening is set to 6 mm (0.2 in.) front and rear (Fig. 6).

(2) Place glass in window opening with front inserted between run channel and outer door panel (Fig. 7).

(3) Lower glass downward into door.

(4) Insert ends of glass into glass run weatherstrip channels at front and rear of door.

(5) Place glass in position on regulator lift plates.

(6) Roll glass up to level to tie down two glass clamps and fasten.

(7) Install inner belt molding.(Refer to 23 - BODY/WEATHERSTRIP/SEALS/FRONT DOOR INNER BELT MOLDING - INSTALLATION)

(8) Verify door glass operation and fit.

(9) Install watershield. (Refer to 23 - BODY/DOOR - FRONT/WATERSHIELD - INSTALLATION)

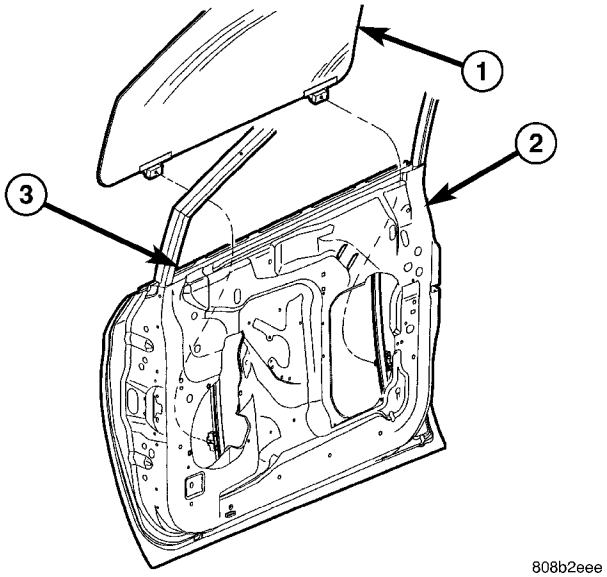

Fig. 7 FRONT DOOR GLASS

1 - DOOR GLASS
2 - FRONT DOOR
3 - GLASS RUN CHANNEL

FRAME CLOSEOUT MOLDING

REMOVAL – A-PILLAR-HEADER, OR B-PILLAR

(1) Roll door glass down.

(2) Using a hook tool, pull front door frame close-out molding from window frame channel.

(3) Remove closeout molding from vehicle.

INSTALLATION – A-PILLAR-HEADER, OR B-PILLAR

(1) Position closeout molding in window frame.

(2) Insert closeout molding into window frame channel starting at the corners and working inward.

(3) Verify door glass operation.

HINGE

REMOVAL

(1) Release front door latch and open door.

(2) Mark hinge foot print on both door and pillar to aid when installing door.

(3) Support door on suitable lifting device.

(4) Remove bolts attaching front door to door hinge.

(5) Remove bolts attaching hinge to pillar.

(6) Remove door hinge from vehicle.

HINGE (Continued)

INSTALLATION

CAUTION: When installing a new hinge, make sure that the head of each hinge pin is fully seated into the door hinge. Also, remove the plastic shipping clip and replace it with the correct metal retaining clip once the hinge pin is seated.

(1) Paint hinge prior to installation, if necessary.
(2) Position door to vehicle. Verify net pierce nubbin is engaged if reusing original hinges. Applies to body half of hinge only.
(3) Install bolts attaching hinge to pillar. Tighten bolts to 34 N·m (25 ft. lbs.).
(4) Install bolts attaching front door to door hinge. Tighten bolts to 34 N·m (25 ft. lbs.).
(5) Align door to achieve equal spacing to surrounding body panels. Panels should be flush across all gaps.
(6) Verify door alignment and operation. Adjust as necessary.

LATCH

REMOVAL

(1) Roll door glass up.
(2) Remove front door trim panel. (Refer to 23 - BODY/DOOR - FRONT/TRIM PANEL - REMOVAL)
(3) Remove watershield as necessary to gain access to the outside door handle.
(4) Through access hole at rear of inner door panel, disconnect wire connector from power door lock motor, if equipped.
(5) Disengage clips holding linkage to door latch (Fig. 8).
(6) Remove linkages from door latch.
(7) Remove screws attaching door latch to door end frame (Fig. 9).
(8) Remove door latch from door.

INSTALLATION

NOTE: The screws attaching the door latch to the door end frame have nylon patches on the threads. All screws must be replaced when the latch has been removed.

(1) Insert inside handle latch link to door latch and engage clip (Fig. 8).
(2) Place door latch in position on door end frame.
(3) Install screws attaching door latch to door end frame. Tighten screws to 10 N·m (90 in. lbs.) torque (Fig. 9).
(4) Insert other linkages to door latch and engage clips.

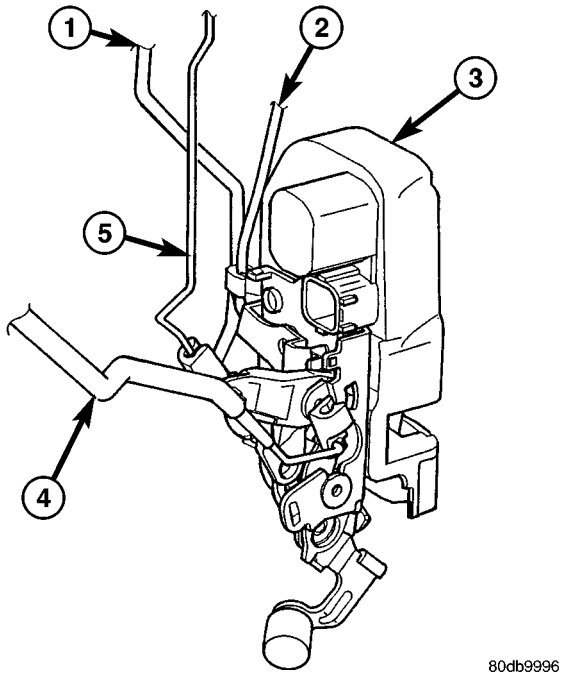

Fig. 8 LATCH ASSEMBLY

1 - OUTSIDE HANDLE TO LATCH LINK
2 - KEY CYLYLINDER TO LATCH LINK
3 - LATCH ASSEMBLY
4 - INSIDE HANDLE LINK AND SLEEVE
5 - LOCK KNOB LINK

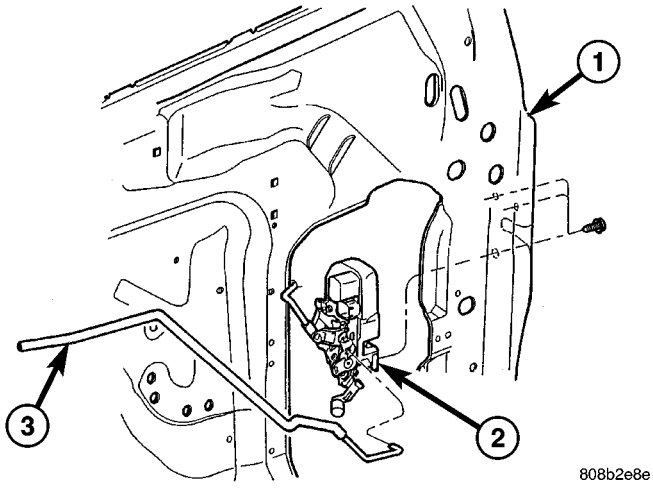

Fig. 9 FRONT DOOR LATCH

1 - FRONT DOOR
2 - LATCH ASSEMBLY
3 - INSIDE HANDLE LINK

(5) Connect wire connector into power door lock motor, if equipped.
(6) Insert a hex wrench through the elongated hole located in the door shut face above the latch.
(7) Loosen allen head screw.
(8) Pull outward on the outside door handle and release.
(9) Tighten allen head screw.

LATCH (Continued)

(10) Verify door latch and power door lock operation.

(11) Install watershield and front door trim panel.

LATCH STRIKER

REMOVAL

(1) Mark outline of door striker on B-pillar to aid in installation.

(2) Remove screws attaching door latch striker to B-pillar (Fig. 10).

(3) Remove door latch striker from vehicle.

(4) Retrieve any shims found between latch striker and B-pillar.

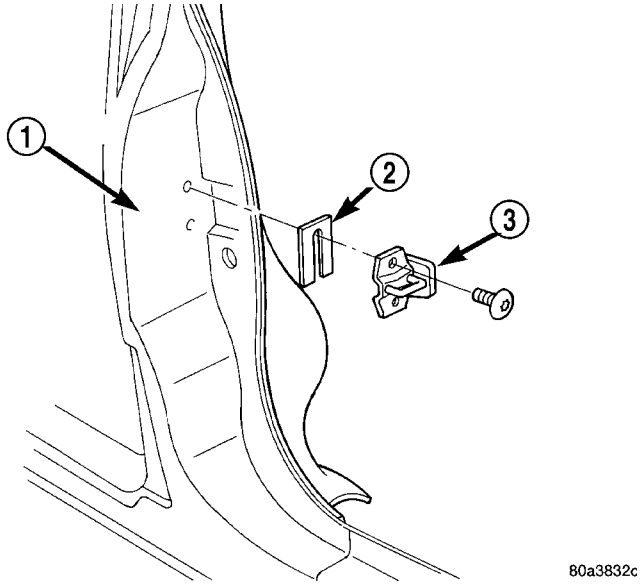

Fig. 10 DOOR LATCH STRIKER

1 - B-PILLAR
2 - SHIM
3 - DOOR LATCH STRIKER

INSTALLATION

(1) Position latch striker and any shims retrieved on vehicle.

(2) Loosely install screws attaching latch striker to B-pillar.

(3) Align latch striker to outline on B-pillar made previously.

(4) Tighten fasteners to 28 N·m (21 ft. lbs.) torque.

(5) Verify door fit and operation. Adjust latch striker as necessary.

LOCK CYLINDER

REMOVAL

(1) Roll door glass up.

(2) Remove front door watershield as necessary to gain access to the outside door handle. (Refer to 23 - BODY/DOOR - FRONT/WATERSHIELD - REMOVAL)

(3) Through access hole at rear of inner door panel, disconnect Vehicle Theft Security System (VTSS) switch connector from door harness, if equipped.

(4) Disengage push in fasteners attaching VTSS switch harness to inner door reinforcement bar, if equipped.

(5) Disengage clip holding door latch linkage to door latch (Fig. 11).

(6) Remove latch linkage from latch.

(7) Disengage clip holding door lock linkage to door latch.

(8) Remove lock linkage from latch.

(9) Remove nuts attaching outside door handle to door outer panel.

(10) Remove outside door handle from vehicle.

(11) Disengage clip holding lock cylinder into outside handle.

(12) Pull lock cylinder from door handle.

INSTALLATION

(1) Engage clip into outside handle to hold lock cylinder (Fig. 11).

(2) With link arm toward rear of vehicle, push lock cylinder into door handle until clip snaps into place.

(3) Insert lock linkage into door latch.

(4) Engage clip to hold door lock linkage to latch.

(5) Insert latch linkage into door latch.

(6) Engage clip to hold door latch linkage to latch.

(7) Install push in fasteners attaching VTSS switch harness to inner door reinforcement bar, if equipped.

(8) Connect VTSS switch connector into door harness, if equipped.

(9) Verify door latch operation.

(10) Install watershield and door trim panel.

LOCK CYLINDER (Continued)

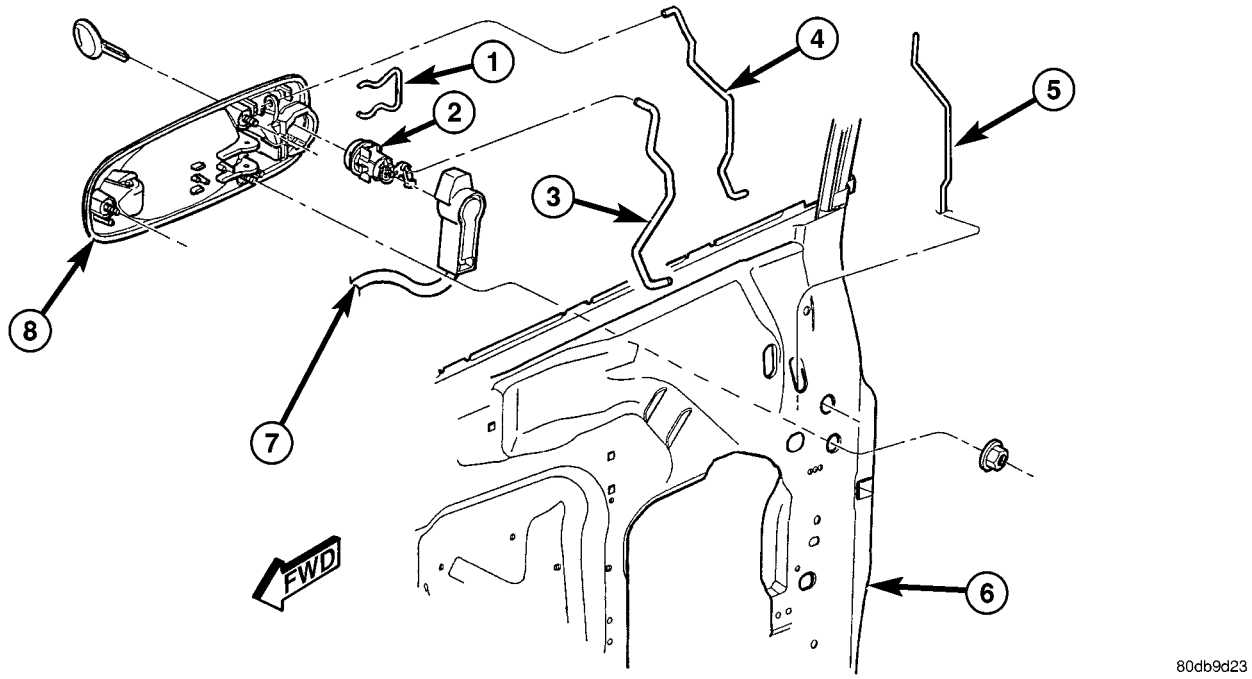

Fig. 11 OUTSIDE DOOR HANDLE

1 - CLIP
2 - LOCK CYLINDER
3 - KEY CYLINDER TO LATCH LINK
4 - OUTSIDE HANDLE TO LATCH LINK
5 - LOCK KNOB LINK
6 - FRONT DOOR
7 - KEY POSITION SWITCH
8 - OUTSIDE HANDLE

TRIM PANEL

REMOVAL

(1) Remove the plug and remove screw attaching door pull cup to inner door panel.

(2) Remove switch bezel and disconnect power window/memory switch.

(3) Remove screws attaching trim panel to door from below map pocket.

(4) If equipped, remove window crank. (Refer to 23 - BODY/DOOR - FRONT/WINDOW CRANK - REMOVAL)

(5) Remove screw holding door trim to door panel from behind inside latch release handle.

(6) Disengage clips attaching door trim to door frame around perimeter of panel.

(7) Lift trim panel upward to disengage flange from inner belt molding at top of door.

(8) Tilt top of trim panel away from door to gain access to latch linkage.

(9) Disengage clip attaching linkage rod to inside latch release handle (Fig. 12).

(10) Separate linkage rod from latch handle.

(11) Disconnect the power door switch, courtesy lamp electrical connectors.

(12) Remove front door trim panel from vehicle.

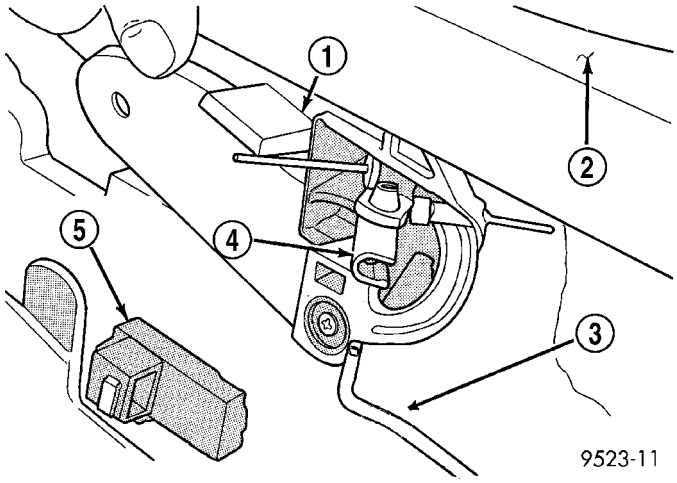

Fig. 12 INSIDE DOOR HANDLE LINKAGE

1 - DOOR LATCH HANDLE
2 - DOOR TRIM
3 - LATCH LINKAGE
4 - CLIP
5 - MEMORY SEAT SWITCH

INSTALLATION

(1) Hold top of trim panel away from door to gain access to latch linkage.

(2) Place linkage rod in position on latch handle.

(3) Engage clip to hold linkage rod to inside latch release handle.

TRIM PANEL (Continued)

(4) Place front door trim panel in position on door.
(5) Install trim panel into inner belt molding at top of door.
(6) Install clips to attach door trim to door frame around perimeter of panel.
(7) If equipped, install screw to attach door trim to door panel behind inside latch release handle.
(8) If equipped, connect power switch into wire connector.
(9) Place power accessary switch in position on door trim.
(10) Connect wire connector into memory seat/mirror switch and install switch into trim panel.
(11) Install screws to attach accessary switch panel to door trim.
(12) Install screw cover into switch panel.
(13) If equipped, install window crank.
(14) If equipped, install screws to attach trim panel to door inside map pocket.
(15) If equipped, install screw to attach door pull cup to inner door panel.
(16) If equipped, install screws to attach door assist handle to inner door panel.
(17) Connect wire connector into courtesy lamp.
(18) Install lamp in door trim.
(19) Install switch bezel.

WATERSHIELD

REMOVAL

(1) Remove door trim panel. (Refer to 23 - BODY/DOOR - FRONT/TRIM PANEL - REMOVAL)
(2) Remove the front door speaker. (Refer to 8 - ELECTRICAL/AUDIO/SPEAKER - REMOVAL)
(3) Peel watershield away from adhesive around perimeter of inner door panel.

INSTALLATION

(1) Insure that enough adhesive remains to securely retain the water dam. Replace as necessary.
(2) Place the shield into position and press securely to adhesive making sure to properly route wiring and linkages.
(3) Install the front door speaker. (Refer to 8 - ELECTRICAL/AUDIO/SPEAKER - INSTALLATION)
(4) Install door trim panel. (Refer to 23 - BODY/DOOR - FRONT/TRIM PANEL - INSTALLATION)

WINDOW CRANK

REMOVAL

(1) Using a window crank removal tool, disengage clip attaching window crank to regulator shaft (Fig. 13).

NOTE: Wrap a shop towel around the window crank to catch the clip when it springs out.

(2) Pull window crank from regulator shaft.

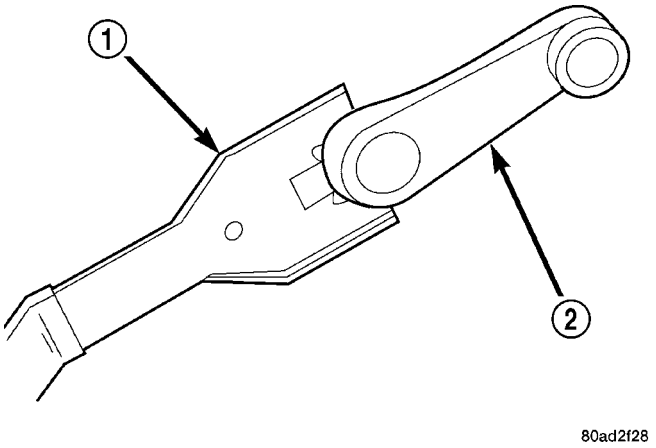

Fig. 13 WINDOW CRANK - TYPICAL

1 - WINDOW CRANK REMOVAL TOOL
2 - WINDOW CRANK

INSTALLATION

(1) Place the clip on to the window crank handle.
(2) Position window crank to regulator shaft.
(3) Push window crank onto regulator shaft to engage retaining clip.

EXTERIOR HANDLE

REMOVAL

(1) Roll door glass up.
(2) Remove the watershield as necessary to gain access to the outside door handle. (Refer to 23 - BODY/DOOR - FRONT/WATERSHIELD - REMOVAL)
(3) Through access hole at rear of inner door panel, disconnect Vehicle Theft Security System (VTSS) switch connector from door harness, if equipped.
(4) Disengage push in fasteners attaching VTSS switch harness to inner door reinforcement bar, if equipped.
(5) Disengage clip holding door latch linkage to door latch (Fig. 11).
(6) Remove latch linkage from latch.

EXTERIOR HANDLE (Continued)

(7) Disengage clip holding door lock linkage to door latch.
(8) Remove lock linkage from latch.
(9) Remove nuts holding outside door handle to door outer panel.
(10) Remove outside door handle from vehicle.

INSTALLATION

If outside door handle replacement is necessary, transfer lock cylinder from the original handle to the new one.
(1) Place outside door handle in position on vehicle.
(2) Install nuts attaching outside door handle to door outer panel (Fig. 11). Tighten nuts to 6 N·m (50 in. lbs.).
(3) Insert lock linkage into door latch.
(4) Engage clip to hold door lock linkage to latch.
(5) Insert latch linkage into door latch.
(6) Engage clip to hold door latch linkage to latch.
(7) Install push-in fasteners to hold VTSS switch harness to inner door reinforcement bar, if equipped.
(8) Connect VTSS switch connector into door harness, if equipped.
(9) Verify door latch operation.
(10) Install sound shield and door trim panel.

WINDOW REGULATOR - POWER

REMOVAL

(1) Remove watershield. (Refer to 23 - BODY/DOOR - FRONT/WATERSHIELD - REMOVAL)
(2) Remove inner belt molding.(Refer to 23 - BODY/WEATHERSTRIP/SEALS/FDR INNER BELT WEATHERSTRIP - REMOVAL)
(3) Remove door glass. (Refer to 23 - BODY/DOOR - FRONT/DOOR GLASS - REMOVAL).
(4) Disconnect wire connector from power window motor.
(5) Loosen screws attaching front and rear window guide rails to inner door panel.
(6) Remove screw heads on guide rails from key hole slots in inner door panel.
(7) Loosen screws attaching motor/housing to inner door panel.
(8) Remove regulator from inner door panel.
(9) Extract rear guide rail through inner door panel rear access hole (Fig. 14).
(10) Extract front guide rail through front access hole.

INSTALLATION

(1) Insert front guide rail through front access hole.

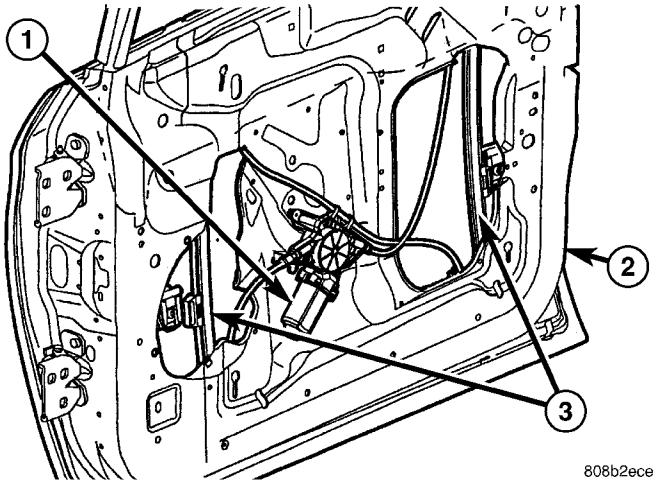

Fig. 14 FRONT DOOR POWER WINDOW

1 - POWER WINDOW MOTOR
2 - FRONT DOOR
3 - GUIDE RAILS

(2) Insert rear guide rail through rear access hole.
(3) Place window regulator in position on inner door panel.
(4) Place screw heads on guide rails in position through key hole slots in inner door panel.
(5) Tighten screws to attach front and rear guide rails to inner door panel to 8.5–10.7 N·m (75–95 in lbs). Tighten top screw first and bottom screw second.
(6) Tighten screws to attach motor/housing to inner door panel to 2.8 N·m (25 in lbs).
(7) Connect wire connector into power window motor.
(8) Install door glass. (Refer to 23 - BODY/DOOR - FRONT/DOOR GLASS - INSTALLATION)
(9) Verify door glass alignment and operation.
(10) Install inner belt molding (Refer to 23 - BODY/WEATHERSTRIP/SEALS/FDR INNER BELT WEATHERSTRIP - INSTALLATION)
(11) Install watershield. (Refer to 23 - BODY/DOOR - FRONT/WATERSHIELD - INSTALLATION)

WINDOW REGULATOR - MANUAL

REMOVAL

(1) Remove watershield. (Refer to 23 - BODY/DOOR - FRONT/WATERSHIELD - REMOVAL)
(2) Remove inner belt molding.(Refer to 23 - BODY/WEATHERSTRIP/SEALS/FDR INNER BELT WEATHERSTRIP - REMOVAL)
(3) Remove door glass. (Refer to 23 - BODY/DOOR - FRONT/DOOR GLASS - REMOVAL).

WINDOW REGULATOR - MANUAL (Continued)

(4) Loosen screws attaching front and rear window guide rails to inner door panel. (Fig. 15).

(5) Remove screw heads on guide rails from key hole slots in inner door panel.

(6) Loosen screws attaching regulator to inner door panel.

(7) Remove regulator from inner door panel.

(8) Extract rear guide rail through inner door panel rear access hole.

(9) Extract front guide rail through front access hole.

INSTALLATION

(1) Insert front guide rail through front access hole.

(2) Insert rear guide rail through rear access hole.

(3) Place window regulator in position on inner door panel.

(4) Place screw heads on guide rails in position through key hole slots in inner door panel.

(5) Tighten screws to attach front and rear guide rails to inner door panel to 8.5–10.7 N·m (75–95 in lbs). Tighten top screw first and bottom screw second on each rail.

(6) Tighten screws to attach regulator to inner door panel to 2.8 N·m (25 in lbs).

(7) Install door glass. (Refer to 23 - BODY/DOOR - FRONT/DOOR GLASS - INSTALLATION)

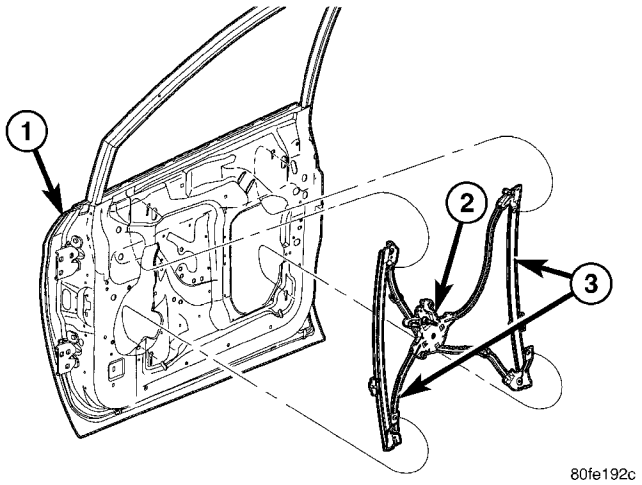

Fig. 15 FRONT DOOR MANUAL WINDOW REGULATOR

1 - FRONT DOOR
2 - MANUAL WINDOW REGULATOR
3 - GUIDE RAILS

(8) Verify door glass alignment and operation.

(9) Install inner belt molding (Refer to 23 - BODY/ WEATHERSTRIP/SEALS/FDR INNER BELT WEATHERSTRIP - INSTALLATION)

(10) Install watershield. (Refer to 23 - BODY/ DOOR - FRONT/WATERSHIELD - INSTALLATION)

DOORS - SLIDING

TABLE OF CONTENTS

page

CENTER HINGE
REMOVAL 24
INSTALLATION 24
SLIDING DOOR STOP BUMPER BEZEL
REMOVAL 25
INSTALLATION 25
STOP BUMPER
REMOVAL 25
INSTALLATION 25
HOLD OPEN LATCH
REMOVAL 25
INSTALLATION 25
HOLD OPEN LATCH STRIKER
REMOVAL 26
INSTALLATION 26
LATCH / LOCK ASSEMBLY
REMOVAL 26
INSTALLATION 27
INSIDE HANDLE ACTUATOR
REMOVAL 27
INSTALLATION 27
CENTER STRIKER
REMOVAL 28
INSTALLATION 28
LOWER HINGE
REMOVAL 28
INSTALLATION 28
REAR LATCH STRIKER
REMOVAL 29
INSTALLATION 29
SLIDING DOOR
REMOVAL 29
INSTALLATION 29

page

ADJUSTMENTS
SLIDING DOOR ADJUSTMENTS 30
STABILIZER
REMOVAL 33
INSTALLATION 33
STABILIZER SOCKET
REMOVAL 33
INSTALLATION 33
TRIM PANEL
REMOVAL 34
INSTALLATION 34
INSIDE LATCH HANDLE
REMOVAL 34
INSTALLATION 34
BELLCRANK
REMOVAL 35
INSTALLATION 35
OUTSIDE HANDLE
REMOVAL 35
INSTALLATION 36
UPPER HINGE
REMOVAL 36
INSTALLATION 36
OUTSIDE HANDLE CABLE
REMOVAL 37
INSTALLATION 37
INSIDE HANDLE CABLE
REMOVAL 37
INSTALLATION 38
HOLD OPEN LATCH CABLE
REMOVAL 38
INSTALLATION 38

CENTER HINGE

REMOVAL

NOTE: For power sliding door procedures refer to POWER SLIDING DOOR SYSTEM in the ELECTRICAL section.

(1) Open sliding door to the mid point of its travel.
(2) Support sliding door on a suitable lifting device.
(3) Mark outline of center hinge of inner door panel to aid installation.
(4) Remove bolts attaching center hinge to sliding door.
(5) Remove center hinge from sliding door.
(6) Roll center hinge to rear of roller channel.
(7) Remove center hinge from vehicle.

INSTALLATION

NOTE: For power sliding door procedures refer to POWER SLIDING DOOR SYSTEM in the ELECTRICAL section.

CENTER HINGE (Continued)

NOTE: Center hinge has an adjustable bolt for up/down alignment. (Refer to 23 - BODY/DOORS - SLIDING/SLIDING DOOR - ADJUSTMENTS)

(1) Place center hinge in position on vehicle.
(2) Roll center hinge forward in roller channel.
(3) Place center hinge in position on sliding door and align marks.
(4) Install bolts attaching center hinge to sliding door.
(5) Verify sliding door alignment and operation.

SLIDING DOOR STOP BUMPER BEZEL

REMOVAL

(1) Using a trim stick (C-4755), disengage clips attaching door stop bumper bezel to the door trim panel.
(2) Remove bezel from vehicle (Fig. 1).

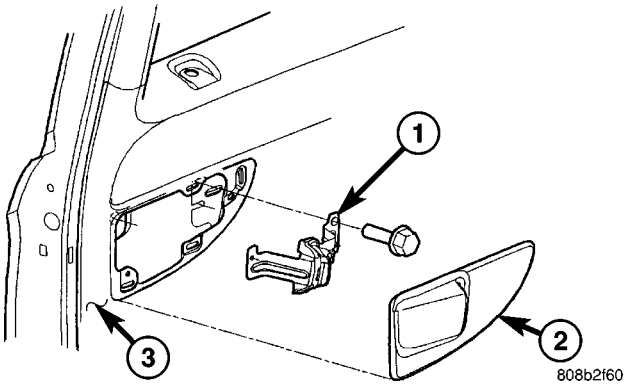

Fig. 1 SLIDING DOOR STOP BUMPER

1 - DOOR STOP BUMPER
2 - DOOR STOP BUMPER BEZEL
3 - SLIDING DOOR

INSTALLATION

(1) Place door stop bumper bezel into position (Fig. 1).
(2) Engage clips attaching door stop bumper bezel to the door trim panel.

STOP BUMPER

REMOVAL

(1) Remove door stop bumper bezel.
(2) Loosen screws attaching rear of stop bumper to door inner panel (Fig. 1).
(3) Remove screw attaching front of door stop bumper to door inner panel.
(4) Remove door stop bumper from vehicle.

INSTALLATION

(1) Place stop bumper in position on vehicle.
(2) Install screw attaching front of stop bumper to door inner panel (Fig. 1).
(3) Tighten screws attaching rear of stop bumper to door inner panel.
(4) Install door stop bumper bezel.

HOLD OPEN LATCH

REMOVAL

(1) Open sliding door.
(2) Remove sliding door sill plate. (Refer to 23 - BODY/INTERIOR/SLIDING DOOR SILL PLATE - REMOVAL)
(3) Remove nuts attaching hold open latch to lower roller arm (Fig. 2).
(4) Remove hold open latch from lower arm.
(5) Disconnect cable from hold open latch.
(6) Remove hold open latch from vehicle.

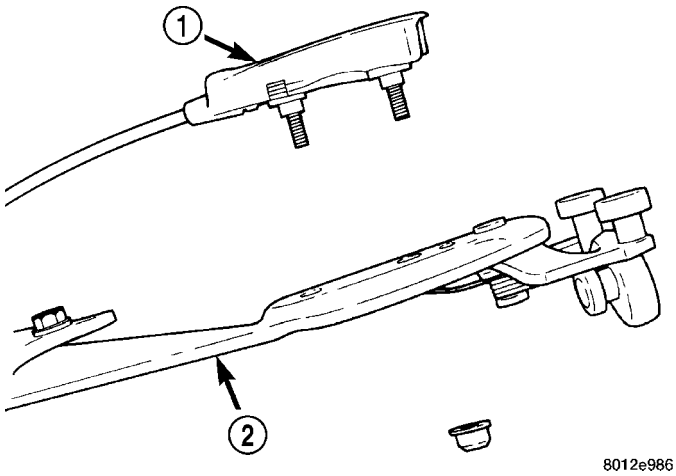

Fig. 2 SLIDING DOOR HOLD OPEN LATCH

1 - SLIDING DOOR HOLD OPEN LATCH - MANUAL DOOR
2 - LOWER ROLLER ARM

INSTALLATION

(1) Place hold open latch in position on vehicle.
(2) Connect cable to hold open latch.
(3) Place hold open latch in position on lower arm.
(4) Install nuts attaching the hold open latch to lower roller arm. Tighten nuts to 5 N·m (45 in. lbs.) torque.
(5) Install sliding door sill plate. (Refer to 23 - BODY/INTERIOR/SLIDING DOOR SILL PLATE - INSTALLATION)
(6) Verify sliding door operation.

HOLD OPEN LATCH STRIKER

REMOVAL

NOTE: For power sliding door procedures refer to POWER SLIDING DOOR SYSTEM in the ELECTRICAL section.

(1) Open sliding door, do not latch open.
(2) Remove sliding door sill plate. (Refer to 23 - BODY/INTERIOR/SLIDING DOOR SILL PLATE - REMOVAL)
(3) Remove two bolts attaching sliding door hold open latch striker to door sill (Fig. 3).
(4) Remove hold open latch striker from vehicle.

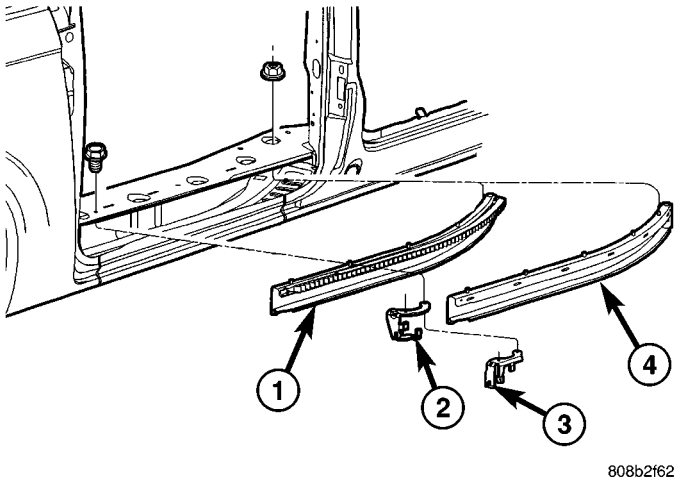

Fig. 3 SLIDING DOOR HOLD OPEN LATCH STRIKER

1 - POWER DOOR LOWER TRACK
2 - POWER DOOR HOLDING STRIKER
3 - MANUAL DOOR HOLDING STRIKER
4 - MANUAL DOOR LOWER TRACK

INSTALLATION

NOTE: For power sliding door procedures refer to POWER SLIDING DOOR SYSTEM in the ELECTRICAL section.

(1) Place hold open latch striker in position on vehicle.
(2) Install two bolts attaching sliding door hold open latch striker to door sill.
(3) Install sliding door sill plate. (Refer to 23 - BODY/INTERIOR/SLIDING DOOR SILL PLATE - INSTALLATION)
(4) Verify sliding door operation.

LATCH / LOCK ASSEMBLY

REMOVAL

NOTE: For power sliding door procedures refer to POWER SLIDING DOOR SYSTEM in the ELECTRICAL section.

(1) Remove sliding door trim panel. (Refer to 23 - BODY/DOORS - SLIDING/TRIM PANEL - REMOVAL)
(2) Remove sliding door stop bumper. (Refer to 23 - BODY/DOORS - SLIDING/STOP BUMPER - REMOVAL)
(3) Peel watershield away from adhesive around perimeter of inner door panel.
(4) Disengage external cable from latch/lock assembly (Fig. 4).
(5) Remove foam block.
(6) Remove inside door handle assembly (Refer to 23 - BODY/DOORS - SLIDING/INSIDE LATCH HANDLE - REMOVAL).
(7) Disengage inside cable from latch/lock assembly.
(8) Disengage link from bellcrank.
(9) Disengage hold open latch cable from lower hinge.
(10) Remove bolts attaching latch/lock control to sliding door (Fig. 5).
(11) If equipped, lower latch and disconnect wire connector from power door lock motor.
(12) Remove latch/lock from door.

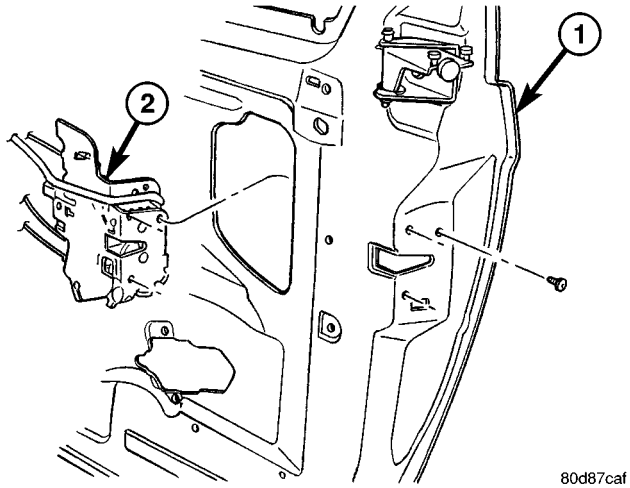

Fig. 4 SLIDING DOOR LATCH/LOCK ASSEMBLY

1 - SLIDING DOOR
2 - LATCH LOCK ASSEMBLY

LATCH / LOCK ASSEMBLY (Continued)

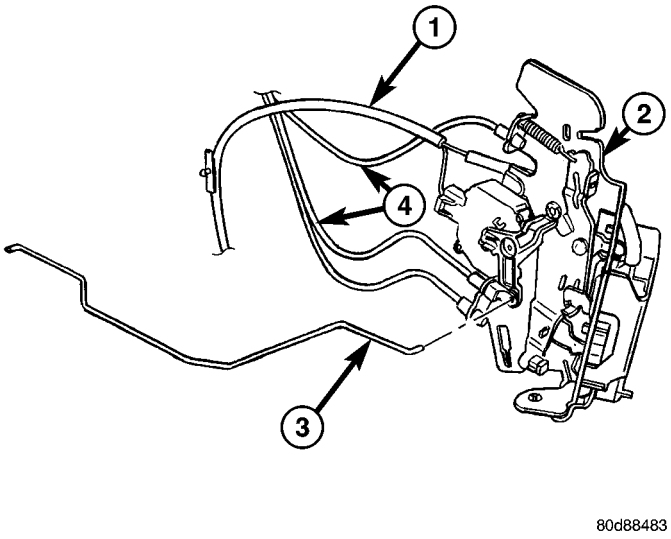

Fig. 5 REMOVING SLIDING DOOR LATCH/LOCK ASSEMBLY

1 - WIRE HARNESS
2 - LATCH/LOCK ASSEMBLY
3 - BELLCRANK LINK ROD
4 - LINK AND SLEEVE ASSEMBLY

INSTALLATION

NOTE: For power sliding door procedures refer to POWER SLIDING DOOR SYSTEM in the ELECTRICAL section.

(1) Position latch/lock locking lever in unlocked position.
(2) If equipped, engage wire connector into power door lock motor (Fig. 4).
(3) Place latch/lock in position on door (Fig. 5).

CAUTION: REPLACE BOLTS IF INSTALLING NEW LATCH.

(4) Insert bolt into slots in sliding door inner panel.
(5) Tighten bolts attaching latch/lock assembly to sliding door.
(6) Engage inside cable into latch/lock assembly.
(7) Install inside door handle assembly (Refer to 23 - BODY/DOORS - SLIDING/INSIDE LATCH HANDLE - INSTALLATION).
(8) Install foam block.
(9) Engage external cable to latch/lock assembly.
(10) Engage link rod to bellcrank.
(11) Engage hold open latch cable from lower hinge.
(12) Engage clip to hold bellcrank link to latch/lock control.
(13) Verify sliding door operation.
(14) Install latch/lock cover.
(15) Insure that enough adhesive remains to securely retain the watershield. Replace as necessary.
(16) Place the watershield into position and press securely to adhesive making sure to properly route wiring and linkages.
(17) Install sliding door stop bumper.(Refer to 23 - BODY/DOORS - SLIDING/STOP BUMPER - INSTALLATION)
(18) Install sliding door trim panel.(Refer to 23 - BODY/DOORS - SLIDING/TRIM PANEL - INSTALLATION)

INSIDE HANDLE ACTUATOR

REMOVAL

(1) Remove latch/lock assembly. (Refer to 23 - BODY/DOORS - SLIDING/LATCH/LOCK CONTROL - REMOVAL).
(2) Remove lock actuator three attaching screws (Fig. 6).

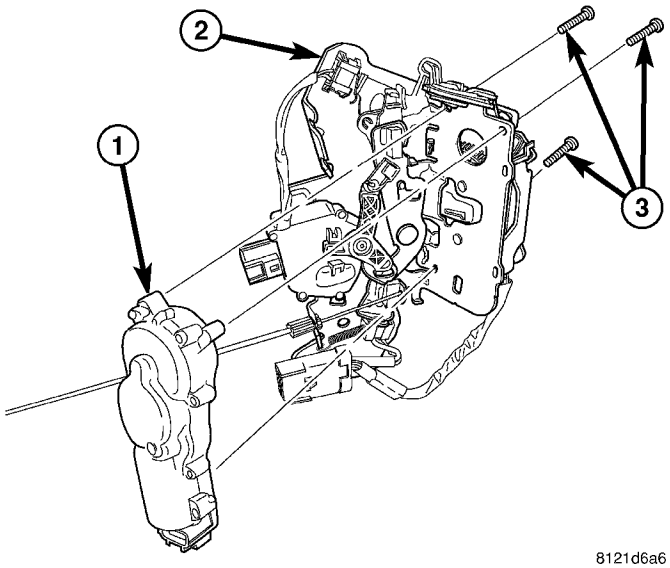

Fig. 6 LOCK ACTUATOR

1 - INSIDE HANDLE ACTUATOR
2 - LATCH/LOCK ASSEMBLY
3 - THREE ATTACHING SCREWS

(3) Remove lock actuator.

INSTALLATION

(1) Place lock actuator into position on latch/lock assembly.
(2) Insall attaching screws (Fig. 6).
(3) Install latch/lock assembly. (Refer to 23 - BODY/DOORS - SLIDING/LATCH / LOCK CONTROL - INSTALLATION).

CENTER STRIKER

REMOVAL

(1) Remove sliding door trim panel. (Refer to 23 - BODY/DOORS - SLIDING/TRIM PANEL - REMOVAL)

(2) Remove bolts attaching stop bumper. Remove stop bumper from door.

(3) Remove screws attaching center striker assembly to door end frame (Fig. 7).

(4) Remove center striker assembly from door through access hole.

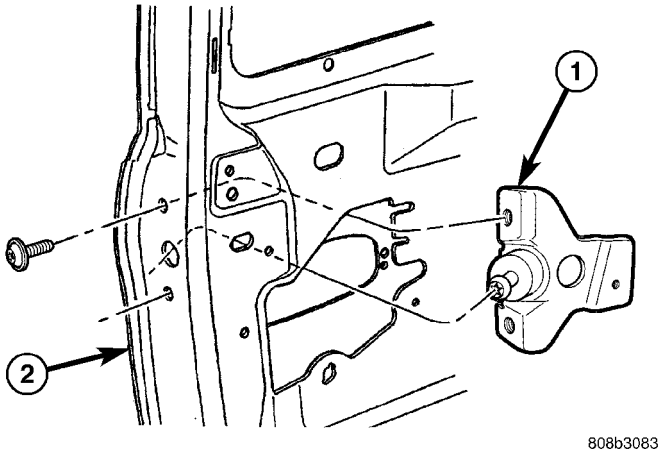

Fig. 7 SLIDING DOOR CENTER STRIKER ASSEMBLY

1 - STRIKER BOLT ASSEMBLY
2 - SLIDING DOOR

INSTALLATION

(1) Place center striker in position on door through access hole (Fig. 7).

(2) Install screws to attach center striker to door end frame.

(3) Install bolts attaching stop bumper.

(4) Install sliding door trim panel (Refer to 23 - BODY/DOORS - SLIDING/TRIM PANEL - INSTALLATION).

LOWER HINGE

REMOVAL

NOTE: For power sliding door procedures refer to POWER SLIDING DOOR SYSTEM in the ELECTRICAL section.

(1) Open sliding door.

(2) Mark outline of roller arm on sliding door to aid installation (Fig. 8).

(3) Remove sliding door sill plate. (Refer to 23 - BODY/INTERIOR/SLIDING DOOR SILL PLATE - REMOVAL)

(4) Remove screws attaching open latch to lower roller arm.

(5) Remove open latch from lower arm.

(6) Support sliding door on a suitable lifting device with a padded upper surface. The door must be moveable with lifting device in place.

(7) Remove hold open latch striker.

(8) Remove bolts attaching lower roller arm to sliding door.

(9) Remove roller arm from sliding door.

(10) Disengage roller arm from lower channel.

(11) Remove roller arm from vehicle.

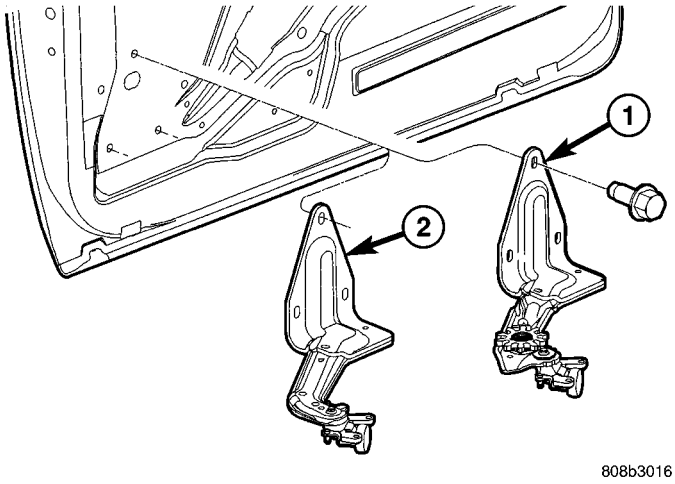

Fig. 8 SLIDING DOOR LOWER ROLLER ARM

1 - POWER LOWER ROLLER ARM
2 - MANUAL LOWER ROLLER ARM

INSTALLATION

NOTE: For power sliding door procedures refer to POWER SLIDING DOOR SYSTEM in the ELECTRICAL section.

(1) Place roller arm into position (Fig. 8).

(2) Engage roller arm to lower channel.

(3) Install roller arm to sliding door.

(4) Install bolts attaching lower roller arm to sliding door.

(5) Install hold open latch striker.

(6) Install screws attaching open latch to lower roller arm.

(7) Install sliding door sill plate. (Refer to 23 - BODY/INTERIOR/SLIDING DOOR SILL PLATE - INSTALLATION)

(8) Check sliding door for proper operation.

REAR LATCH STRIKER

REMOVAL

(1) Open sliding door.
(2) Mark outline of striker on C-pillar door jamb face to aid installation.
(3) Remove screws attaching striker to C-pillar (Fig. 9).
(4) Remove striker from vehicle.

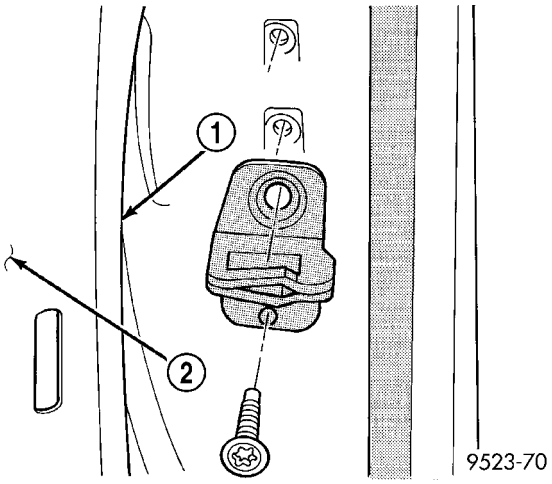

Fig. 9 SLIDING DOOR LATCH STRIKER

1 - LATCH STRIKER
2 - SLIDING DOOR

INSTALLATION

(1) Place striker in position on vehicle.
(2) Align striker to outline marks on C-pillar.
(3) Install screws attaching striker to C-pillar. Tighten screws to 28 N·m (21 ft. lbs.) torque.
(4) Verify sliding door alignment and operation.

SLIDING DOOR

REMOVAL

NOTE: For power sliding door procedures refer to POWER SLIDING DOOR SYSTEM in the ELECTRICAL section.

(1) Apply masking tape to outside surface of quarter panel below the center roller channel, rearward of the door opening.
(2) Release sliding door latch and open door.
(3) Apply masking tape to door jamb area, rearward of the upper roller channel.
(4) Remove screw attaching upper stop bumper to upper roller arm (Fig. 10).
(5) Remove upper stop from upper roller arm.
(6) Remove center stop from sliding door. (Refer to 23 - BODY/DOORS - SLIDING/STOP BUMPER - REMOVAL)
(7) Remove sliding door sill plate. (Refer to 23 - BODY/INTERIOR/SLIDING DOOR SILL PLATE - REMOVAL)
(8) Remove hold open latch striker (Refer to 23 - BODY/DOORS - SLIDING/HOLD OPEN LATCH STRIKER - REMOVAL).
(9) Open quarter glass.
(10) Remove center roller channel end cover (Fig. 11).
(11) Support sliding door on a suitable lifting device with a padded upper surface. The door must be moveable with lifting device in place.

CAUTION: Do not allow the center hinge roller to contact the quarter glass. Glass can break.

(12) Slide door rearward until the upper sliding door hinge roller disengages from the upper channel (Fig. 12).
(13) Continue moving the door rearward until the lower rollers exit the lower track.
(14) Continue moving door rearward till center hinge roller exits the channel (Fig. 13)
(15) Remove sliding door from vehicle.

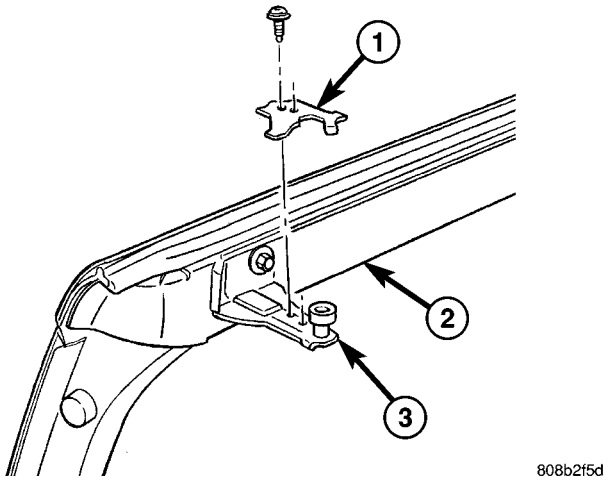

Fig. 10 SLIDING DOOR UPPER STOP

1 - UPPER STOP PLATE
2 - SLIDING DOOR
3 - UPPER SLIDING DOOR HINGE

INSTALLATION

NOTE: For power sliding door procedures refer to POWER SLIDING DOOR SYSTEM in the ELECTRICAL section.

(1) Place sliding door in position on lifting device.
(2) Engage center hinge roller into channel and move door forward (Fig. 13).

SLIDING DOOR (Continued)

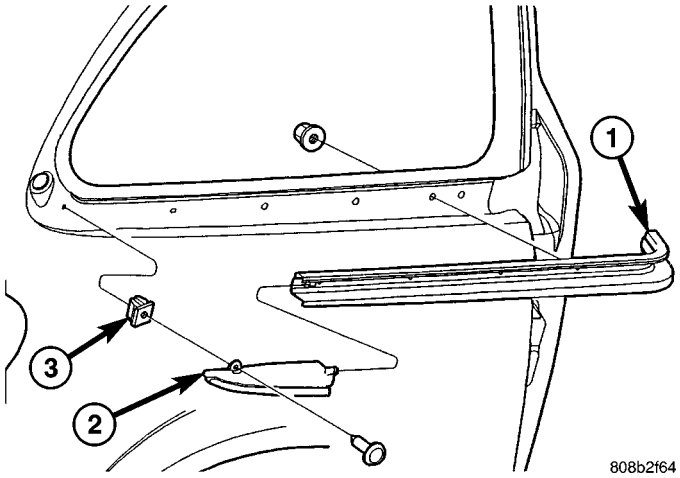

Fig. 11 CENTER CHANNEL END COVER

1 - CENTER CHANNEL
2 - CENTER CHANNEL END COVER
3 - PLASTIC NUT

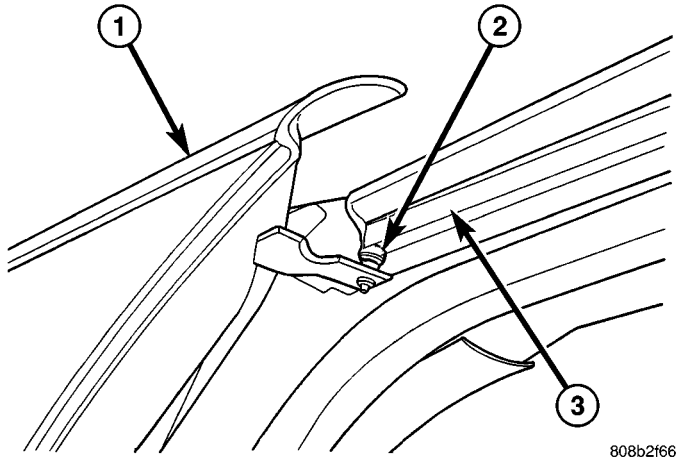

Fig. 12 SLIDING DOOR UPPER ROLLER

1 - SLIDING DOOR
2 - UPPER HINGE
3 - UPPER CHANNEL

(3) Position door rearward of the sliding door opening.

CAUTION: Do not allow the center hinge roller to contact the quarter glass. Glass can break.

(4) Engage the center hinge roller into the channel (Fig. 13).

(5) Roll door forward until lower roller engage into rear of the track.

(6) Engage the upper sliding door hinge into the upper channels (Fig. 12).

(7) Install hold open latch striker(Refer to 23 - BODY/DOORS - SLIDING/HOLD OPEN LATCH STRIKER - INSTALLATION).

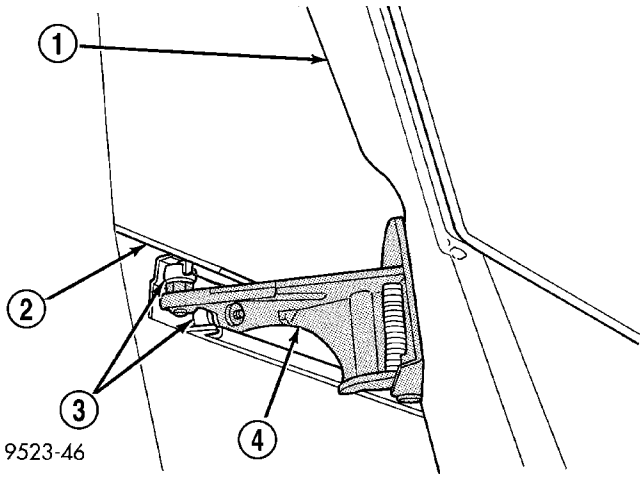

Fig. 13 SLIDING DOOR CENTER ROLLER

1 - SLIDING DOOR
2 - QUARTER GLASS
3 - CENTER HINGE ROLLERS
4 - CENTER HINGE

(8) Install sliding door sill plate.

(9) Install center roller channel end cover (Fig. 11).

(10) Install center stop on sliding door. (Refer to 23 - BODY/DOORS - SLIDING/STOP BUMPER - INSTALLATION)

(11) Place upper roller stop bumper in position on upper roller arm.

(12) Install screw attaching upper roller arm stop bumper to upper roller arm (Fig. 10).

(13) Remove masking tape from body surfaces.

(14) Verify door operation and fit. Adjust as necessary. (Refer to 23 - BODY/DOORS - SLIDING/SLIDING DOOR - ADJUSTMENTS)

ADJUSTMENTS

SLIDING DOOR ADJUSTMENTS

NOTE: For power sliding door procedures refer to POWER SLIDING DOOR SYSTEM in the ELECTRICAL section.

PRELIMINARY CHECKS

(1) Close the sliding door, visually checking C-pillar striker alignment entry into latch. Striker at this point must not affect alignment. Striker should go straight into the latching mechanism.

(2) For the left sliding door, check the fuel door blocker striker entry into latch. Striker at this point must not affect alignment.

(3) Check C-pillar and B-pillar for door to aperture gaps and door to door gaps. All gaps should be 5 mm ± 1 mm.

SLIDING DOOR (Continued)

(4) Check door for height using character lines as a reference. Also check roof contour as a controlling factor.

Using the procedures noted below, adjust the side door in the order the individual steps are called out.

DOOR FLUSHNESS ADJUSTMENT

(1) Check sliding door flushness at the C-pillar striker.

(2) If the sliding door is under or over flush, remove striker assembly and move thread plate over keeping one bolt in plate so it will not fall between inner and outer panels.

(3) Adjust the C-pillar striker in or out until the door is flush. Then, the on size hole can be elongated in the direction required. This can be done by grinding or filing the sheet metal and then painting raw edge to prevent rusting.

(4) Check upper B-pillar flushness to A-pillar cover.

(5) The sliding door upper hinge can only be moved outboard by adding a 1 mm shim behind the hinge mounting area once the two attachment bolts are removed and reinstalled.

(6) Check flushness at upper C-pillar.

(7) If upper C-pillar flushness is out of specification use a heavy rubber mallet on the door assembly until door is in specifications.

DOOR GAP ADJUSTMENT - UP/DOWN

(1) Check height of sliding door at the B-pillar and C-pillar to determine which area is contributing the greatest to the incorrect gaps.

(2) Visually inspect the sliding door for fitting low at the top of the door by checking the alignment of the top contour of the door to the quarter panel.

(3) If the sliding door is high at the C-pillar.

(a) Open the door to mid-point of travel.

(b) Mark outline of center hinge on sliding door to assist in making adjustments.

(c) Loosen center hinge bolts (Fig. 14).

(d) Move hinge fore or aft to position the sliding door into the correct location.

(e) Tighten center hinge bolts to 13 N·m (115 in. lbs.) torque.

(f) Verify alignment, adjust as necessary.

(4) If the sliding door is low at the B-pillar ;

(a) Remove access plug in the sliding door trim panel.

(b) Open the door to mid-point of travel.

(c) Mark outline of lower roller arm bracket on sliding door to assist in making adjustments.

(d) Loosen lower roller arm bracket bolts (Fig. 15).

(e) Move hinge upward to raise the door.

(f) Tighten lower roller arm bracket bolts to 13 N·m (115 in. lbs.) torque.

(g) Verify alignment, adjust as necessary.

(5) If the sliding door is low at the C-pillar;

(a) Open the door to mid-point of travel.

(b) Mark outline of center hinge on sliding door to assist in making adjustments.

(c) Adjust the adjustment bolt up or down to move the door position. (Fig. 14).

(d) Move hinge downward to raise the door.

(e) Tighten center hinge bolts to 13 N·m (115 in. lbs.) torque.

(f) Verify alignment adjust as necessary.

(6) If the sliding door is high at the B-pillar;

(a) Remove access plug in the sliding door trim panel.

(b) Open the door to mid-point of travel.

(c) Mark outline of lower roller arm bracket on sliding door to assist in making adjustments.

(d) Loosen lower roller arm bracket bolts (Fig. 15).

(e) Move hinge upward to raise the door.

(f) Tighten lower roller arm bracket bolts to 13 N·m (115 in. lbs.) torque.

(g) Verify alignment, adjust as necessary.

(7) Fully open the sliding door.

(8) Verify that all center hinge bolts are tight.

(9) Adjust the rear of the sliding door up by turning the center hinge bolt clockwise (Fig. 14).

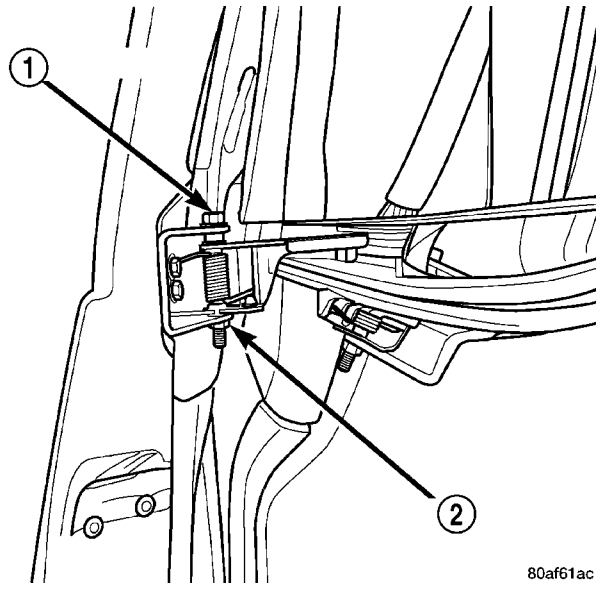

Fig. 14 SLIDING DOOR CENTER HINGE

1 - ADJUSTING BOLT
2 - WELD NUT

(10) Close the door and check the sliding door alignment.

(11) Adjust the front of the sliding door up by adjusting lower hinge bolts.

SLIDING DOOR (Continued)

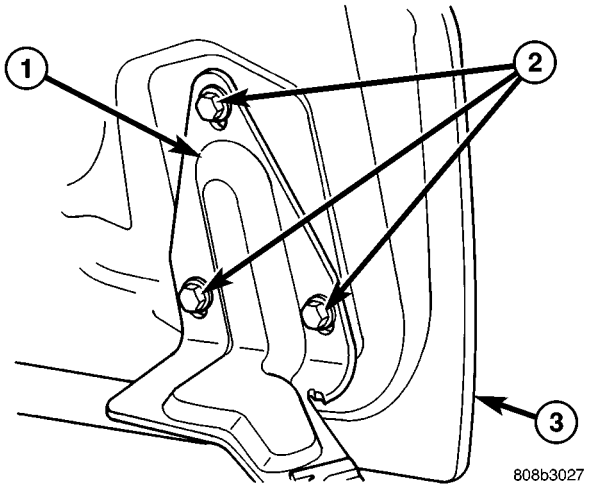

Fig. 15 SLIDING DOOR LOWER ROLLER ARM

1 - LOWER ROLLER ARM BRACKET
2 - BOLTS
3 - SLIDING DOOR

(12) Open door half way and remove lower hinge bolt access plug.

(13) Loosen bolts as necessary to move the front of door up or down.

(14) Check the upper hinge for possible bind, adjust as necessary.

(15) Close the door and check the sliding door alignment.

(16) Fully open door and apply thread lock nut onto the center hinge bolt. Tighten nut until till it butts up against the welded nut on the center hinge. Tighten nut to 13 N·m (115 in. lbs.) torque. It may be necessary to hold the center hinge bolt to prevent it from turning while tightening nut.

(17) Verify alignment, adjust as necessary.

DOOR GAP ADJUSTMENT - FORE/AFT

(1) Check C-pillar and B-pillar for door to aperture gaps (5 mm + 1 mm), and door to door gap (5 mm + 1 mm).

(2) If adjust gaps require adjustment, loosen center hinge screws as necessary to move center hinge forward or rearward.

(3) Moving center hinge rearward increases the gap at C-pillar and decreases gap at B-pillar. Moving center hinge forward decreases gap at the C-pillar and increases gap at the B-pillar

(4) Move center hinge as necessary, and tighten screws.

(5) Close the door and check the sliding door alignment.

(6) Verify door alignment, adjust as necessary.

(7) Tighten center hinge screws to 13 N·m (115 in. lbs.) torque.

DOOR SEAL COMPRESSION

(1) First check Gap & Flush (Refer to 23 - BODY/BODY STRUCTURE/GAP AND FLUSH - SPECIFICATIONS). Check seal compression near the middle of the door even with the latch assembly. Using a piece of paper, place it across door seal and close door. Pull paper out of door opening. If paper tears setting is to tight, if paper slides thought to easily the compression is insufficient and needs to be adjusted.

(2) Adjust seal compression at the top of the B-pillar seal;

(a) Open door to mid-point of travel.

(b) Mark outline of upper roller arm on door to assist in making adjustments.

(c) Loosen bolts attaching upper roller arm to door (Fig. 16).

(d) Decrease the length of the upper roller arm to increase seal compression.

(e) Increase the length of the upper roller arm to decrease seal compression.

(f) Tighten all upper roller arm bolts to 13 N·m (115 in. lbs.) torque.

(g) Verify door alignment, adjust as necessary.

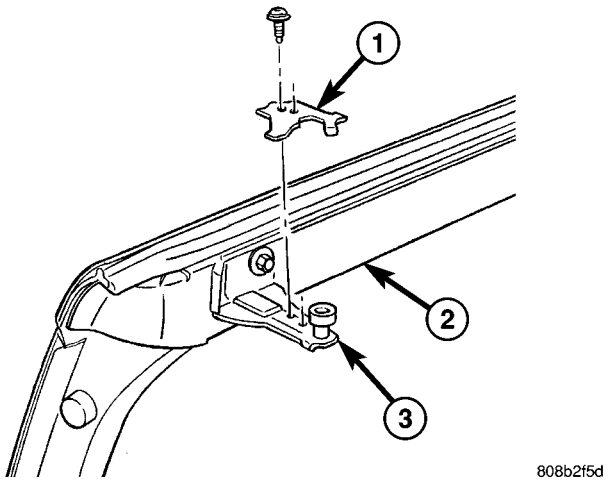

Fig. 16 Sliding Door Upper Roller Arm

1 - UPPER STOP PLATE
2 - SLIDING DOOR
3 - UPPER SLIDING DOOR HINGE

(3) Adjust seal compression at the bottom of B-pillar seal.

(a) Open door to mid-point of travel.

(b) Mark outline of lower roller arm on lower roller arm bracket to assist in making adjustments (Fig. 17).

(c) Loosen bolts holding lower roller arm to lower roller arm bracket.

(d) Pivot lower roller arm toward center of vehicle to decrease seal compression.

SLIDING DOOR (Continued)

(e) Pivot lower roller arm outward to increase seal compression.

(f) Tighten lower roller arm bolts to 13 N·m (115 in. lbs.) torque.

(g) Verify alignment, adjust as necessary.

NOTE: Adjusting seal compression at the B-pillar can affect door flushness the C-pillar.

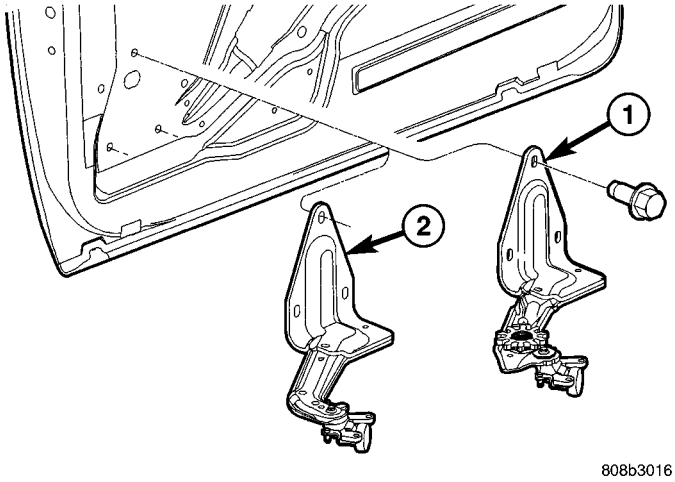

Fig. 17 Sliding Door Lower Roller Arm

1 - POWER LOWER ROLLER ARM
2 - MANUAL LOWER ROLLER ARM

STABILIZER ADJUSTMENT - UPPER/LOWER

(1) Open sliding door.

(2) Loosen the bolts holding the male stabilizers to the sliding door enough that the stabilizers can move with some effort.

(3) Close and then reopen sliding door.

(4) Tighten all stabilizers bolts.

STABILIZER

REMOVAL

(1) Open sliding door.

(2) Remove screws attaching stabilizer to door end frame (Fig. 18).

(3) Remove stabilizer from vehicle.

INSTALLATION

(1) Place stabilizer in position on vehicle.

NOTE: Loose install screws first. Fit should be snug but free to move when closing door to align to body half stabilizer.

(2) Install screws attaching stabilizer to door end frame.

(3) Open door and final tighten screws.

(4) Verify sliding door operation.

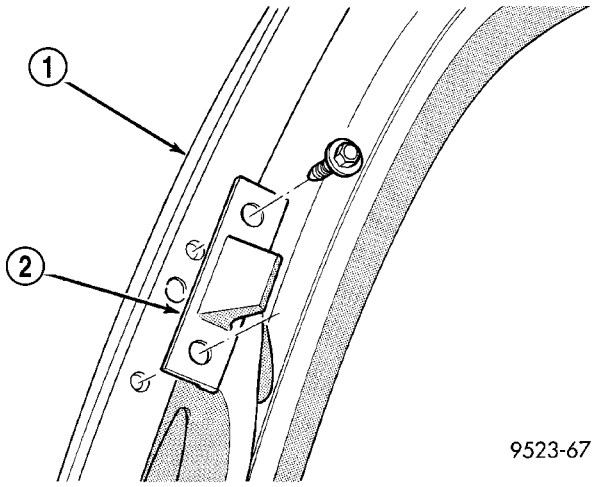

Fig. 18 SLIDING DOOR STABILIZER

1 - SLIDING DOOR
2 - STABILIZER

STABILIZER SOCKET

REMOVAL

(1) Open sliding door.

(2) Remove screws holding stabilizer socket to B-pillar (Fig. 19).

(3) Remove stabilizer socket from vehicle.

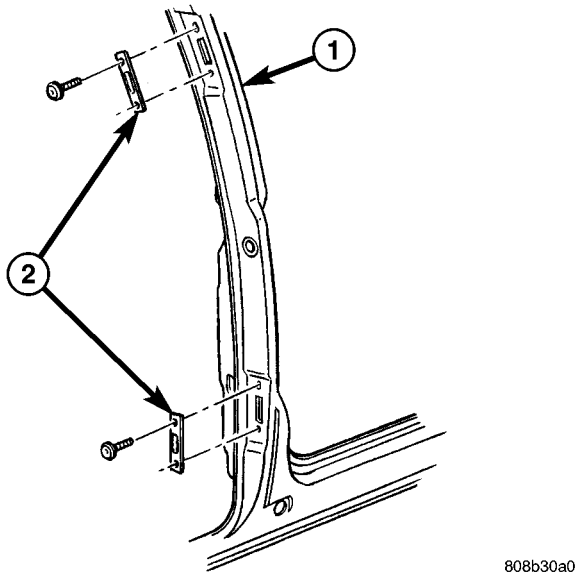

Fig. 19 SLIDING DOOR STABILIZER SOCKET

1 - B-PILLAR
2 - STABILIZER SOCKET

INSTALLATION

(1) Place stabilizer socket in position on vehicle.

NOTE: Ensure that sealing feature damaged, if reusing stabilizer socket.

STABILIZER SOCKET (Continued)

(2) Install screws to hold stabilizer socket to B-pillar. Tighten nuts to 5 N·m (45 in. lbs.) torque.

(3) Close sliding door and verify operation.

TRIM PANEL

REMOVAL

(1) Remove sliding door upper frame molding.

(2) If removing the left sliding door trim panel, remove screw from inside ash receiver bezel.

(3) Remove screw from pull cup.

(4) Disengage push-in fasteners holding trim to door panel around perimeter and upper edge of door (Fig. 20).

(5) Remove sliding door trim panel from vehicle.

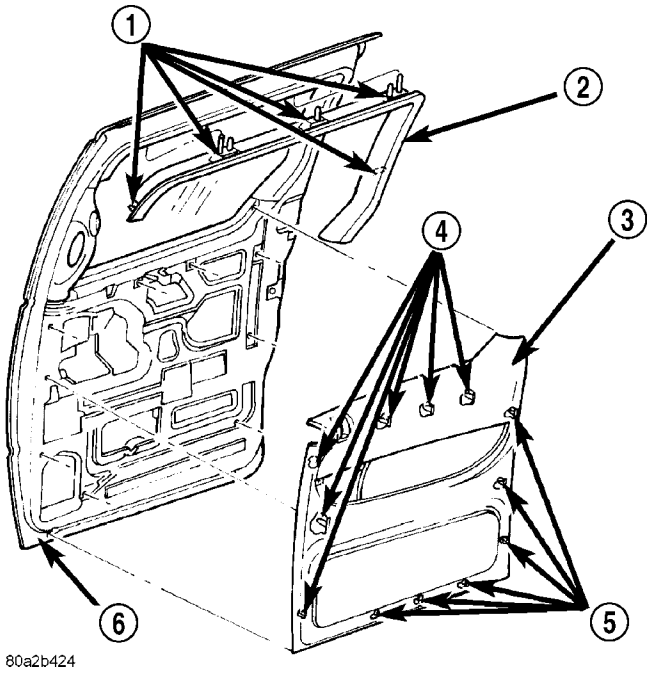

Fig. 20 SLIDING DOOR TRIM PANEL

1 - PUSH-IN FASTENERS
2 - SLIDING DOOR UPPER FRAME MOLDING
3 - SLIDING DOOR TRIM PANEL
4 - PUSH-IN FASTENERS
5 - PUSH-IN FASTENERS
6 - SLIDING DOOR

INSTALLATION

(1) Place sliding door trim panel in position on vehicle.

(2) Align locating pins on backside of trim panel to mating holes in the inner door panel.

(3) Engage push-in fasteners to hold trim to door panel around perimeter and upper edge of door (Fig. 20).

(4) Install pull cup screw.

(5) If necessary, install screw from inside ash receiver bezel on left sliding door trim panel.

(6) Install sliding door upper frame molding.

INSIDE LATCH HANDLE

REMOVAL

(1) Remove sliding door trim panel. (Refer to 23 - BODY/DOORS - SLIDING/TRIM PANEL - REMOVAL)

(2) Remove screws attaching bottom of inside latch handle to sliding door (Fig. 21).

(3) Remove two screw attaching top of inside latch handle to sliding door.

(4) Remove latch handle from sliding door.

(5) Disengage cable end from clip on release handle mechanism.

(6) Disengage cable end from release handle mechanism.

(7) Remove push pin fastener attaching cable end to release handle.

(8) Disengage cable casing end from release handle (Fig. 22).

(9) Disengage cable end from latch handle.

(10) Remove handle from vehicle.

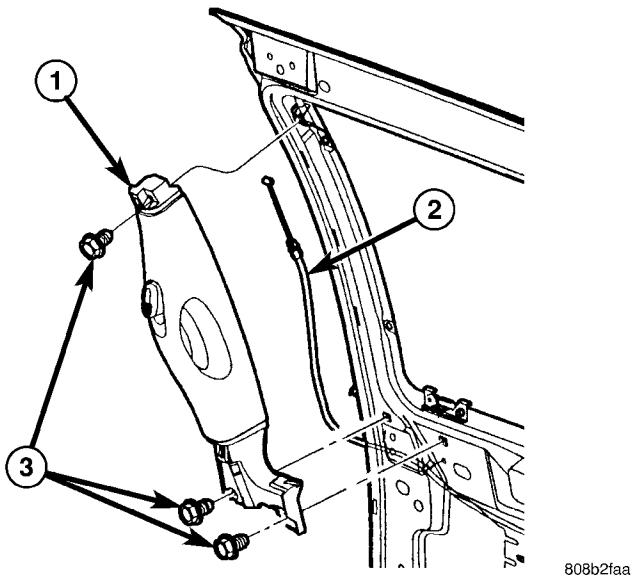

Fig. 21 SLIDING DOOR INSIDE HANDLE

1 - INSIDE ASSIST HANDLE
2 - INSIDE RELEASE HANDLE CABLE
3 - ATTACHING SCREWS

INSTALLATION

(1) Place inside latch handle in position on vehicle.

(2) Engage cable end into latch handle.

(3) Engage cable casing end into release handle.

(4) Install push pin fastener to hold cable into release handle.

(5) Engage cable end into release handle mechanism.

INSIDE LATCH HANDLE (Continued)

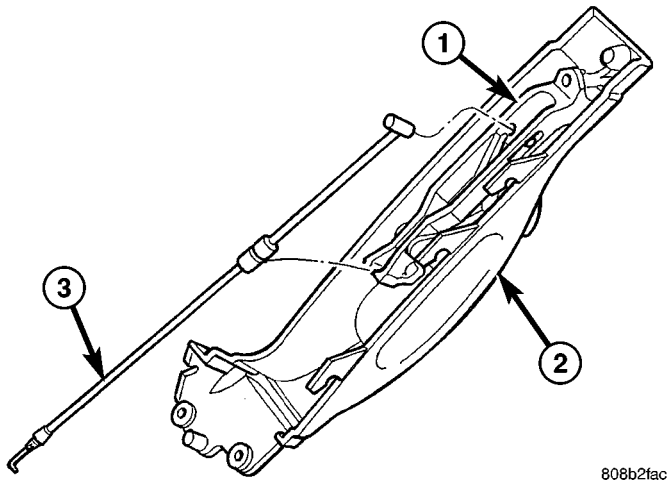

Fig. 22 RELEASE HANDLE CABLE

1 - ASSIST HANDLE MECHANISM
2 - SLIDING DOOR INSIDE ASSIST HANDLE
3 - RELEASE HANDLE CABLE

(6) Engage clip to hold cable end into release handle mechanism.

(7) Place latch handle in position on sliding door.

(8) Install screw to hold top of inside release handle to sliding door.

(9) Install screws to hold bottom of inside latch handle to sliding door.

(10) Verify sliding door operation. Adjust as necessary. (Refer to 23 - BODY/DOORS - SLIDING/SLIDING DOOR - ADJUSTMENTS)

(11) Install sliding door trim panel.(Refer to 23 - BODY/DOORS - SLIDING/TRIM PANEL - INSTALLATION)

BELLCRANK

REMOVAL

(1) Remove stop bumper (Refer to 23 - BODY/DOORS - SLIDING/STOP BUMPER - REMOVAL).

(2) Remove sliding door trim panel. (Refer to 23 - BODY/DOORS - SLIDING/TRIM PANEL - REMOVAL)

(3) Peel watershield away from adhesive around perimeter of inner door panel as necessary to gain access to latch bellcrank.

(4) Disengage lock link (Fig. 23).

(5) Disengage link and sleeve

(6) Remove bellcrank by rotating bellcrank to release it from door.

(7) Remove bellcrank from vehicle.

INSTALLATION

(1) Position bellcrank on vehicle.

(2) Rotate bellcrank into position.

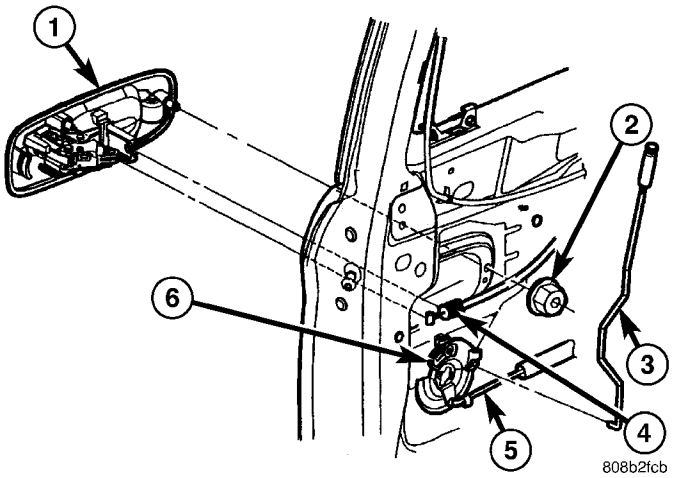

Fig. 23 BELLCRANK

1 - OUTSIDE HANDLE
2 - OUTSIDE HANDLE BRACKET ATTACHING NUT
3 - LOCK KNOB
4 - LATCH LINK
5 - LOCKING LINK
6 - DOOR LOCKING LEVER (BELLCRANK)

(3) Place lock link into position and engage clip (Fig. 23).

(4) Place link and sleeve into position and engage clip.

(5) Place the watershield into position and press securely to adhesive making sure to properly route wiring and linkages.

(6) Install sliding door trim panel (Refer to 23 - BODY/DOORS - SLIDING/TRIM PANEL - INSTALLATION).

(7) Install stop bumper (Refer to 23 - BODY/DOORS - SLIDING/STOP BUMPER - INSTALLATION).

OUTSIDE HANDLE

REMOVAL

(1) Remove sliding door trim panel. (Refer to 23 - BODY/DOORS - SLIDING/TRIM PANEL - REMOVAL)

(2) Remove sliding door stop bumper. (Refer to 23 - BODY/DOORS - SLIDING/STOP BUMPER - REMOVAL)

(3) Peel watershield away from adhesive around perimeter of inner door panel as necessary to access outside release handle fasteners.

(4) Disengage clip attaching outside door handle linkage to door cable.

(5) Remove linkage from outside door handle.

(6) Remove three nuts attaching outside door handle to outer door panel (Fig. 24).

(7) Remove outside door handle from vehicle.

OUTSIDE HANDLE (Continued)

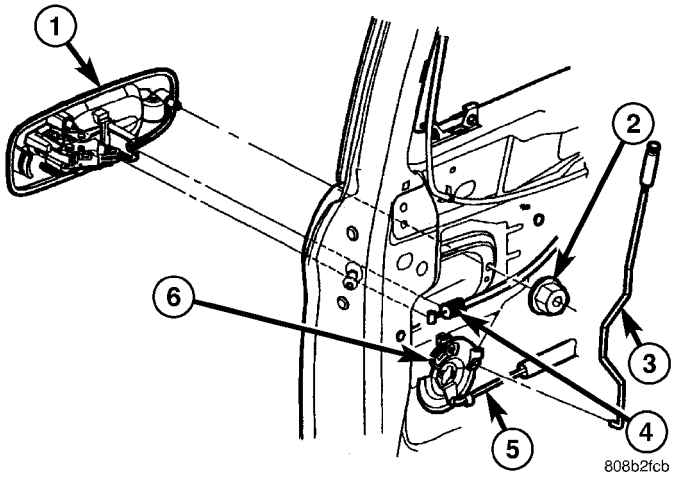

Fig. 24 SLIDING DOOR OUTSIDE LATCH RELEASE HANDLE

1 - OUTSIDE HANDLE
2 - OUTSIDE HANDLE BRACKET ATTACHING NUT
3 - LOCK KNOB
4 - LATCH LINK
5 - LOCKING LINK
6 - DOOR LOCKING LEVER (BELLCRANK)

INSTALLATION

(1) Position outside door handle on vehicle.
(2) Install nuts attaching outside door handle to outer door panel.
(3) Engage clip attaching linkage to outside door handle.
(4) Engage rigging cam to latch/lock control mechanism.
(5) Move clip on latch/lock control to bottom of slot and engage linkage to latch/lock control.
(6) Verify sliding door operation. Adjust as necessary.
(7) Place the watershield into position and press securely to adhesive making sure to properly route wiring and linkages.
(8) Install sliding door stop bumper. (Refer to 23 - BODY/DOORS - SLIDING/STOP BUMPER - INSTALLATION)
(9) Install sliding door trim panel. (Refer to 23 - BODY/DOORS - SLIDING/TRIM PANEL - INSTALLATION)

UPPER HINGE

REMOVAL

(1) Open sliding door, do not latch open.
(2) Remove screw attaching upper stop bracket to upper roller bracket (Fig. 25).
(3) Remove stop bracket from vehicle.
(4) Place a padded block between the open sliding door and the roof rail.
(5) Mark outline of upper hinge bracket on sliding door.
(6) Remove bolts attaching upper roller to sliding door (Fig. 26).
(7) Remove upper hinge from door.
(8) Slide roller out of rear end of roof upper channel.
(9) Remove upper hinge from vehicle.

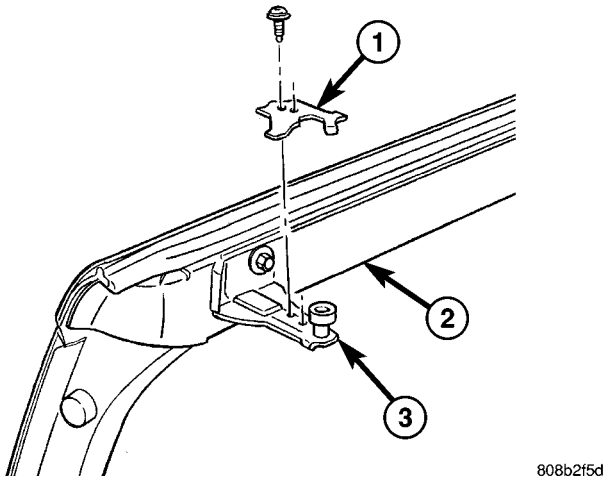

Fig. 25 SLIDING DOOR UPPER STOP

1 - UPPER STOP PLATE
2 - SLIDING DOOR
3 - UPPER SLIDING DOOR HINGE

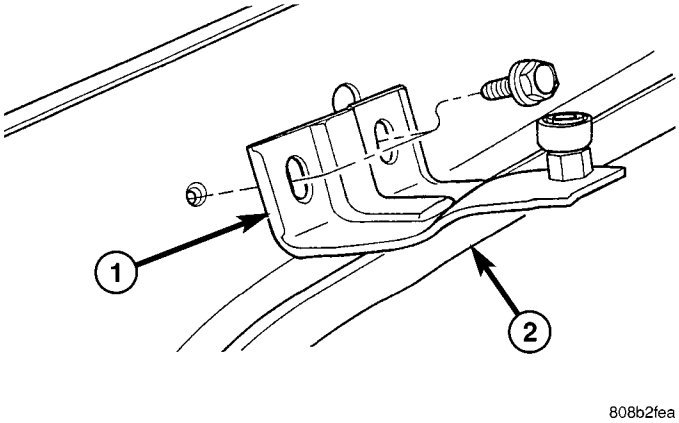

Fig. 26 SLIDING DOOR UPPER HINGE

1 - SLIDING DOOR UPPER HINGE
2 - SLIDING DOOR

INSTALLATION

(1) Place upper hinge in position on vehicle (Fig. 26).
(2) Slide roller into rear end of roof upper channel.
(3) Place upper hinge in position on door.
(4) Align outline marks on sliding door to upper roller bracket

UPPER HINGE (Continued)

(5) Install bolts attaching upper hinge to sliding door.
(6) Remove padded block from between sliding door and roof rail.
(7) Place stop bracket in position on vehicle.
(8) Install screw attaching upper stop bracket to upper roller bracket (Fig. 25).
(9) Verify sliding door alignment and operation. Adjust as necessary. (Refer to 23 - BODY/DOORS - SLIDING/SLIDING DOOR - ADJUSTMENTS)

OUTSIDE HANDLE CABLE

REMOVAL

NOTE: For power sliding door procedures refer to POWER SLIDING DOOR SYSTEM in the ELECTRICAL section.

(1) Disconnect and isolate the negative battery cable.
(2) Remove stop bumper (Refer to 23 - BODY/DOORS - SLIDING/STOP BUMPER - REMOVAL).
(3) Remove the appropriate side door trim panel. (Refer to 23 - BODY/DOORS - SLIDING/TRIM PANEL - REMOVAL)
(4) Peel watershield away from adhesive around perimeter of inner door panel.

CAUTION: Make note of cable routing and foam insulator placement. This will prove helpful when reinstalling replacement cable. Be certain replacement cable is routed and retained correctly.

(5) Trace the outside handle cable along its routing path and disconnect from its retaining clips.
(6) Disconnect the outside handle cable from the latch assembly. Gently pry cable sleeve retainer out of the latch mounting bracket and then unhook swedged cable end from the latch link.
(7) Disconnect the outside handle cable from the handle assembly. Gently pry cable sleeve retainer out of the handle bracket and then unhook swedged cable end from the handle link.
(8) Remove the outside handle cable from the side door.

INSTALLATION

NOTE: For power sliding door procedures refer to POWER SLIDING DOOR SYSTEM in the ELECTRICAL section.

(1) Match the replacement cable up against the old cable to verify the correct part.
(2) Position the outside handle cable on the side door.
(3) Connect the outside handle cable on the handle assembly. Hook the swedged cable end on the handle link and gently push the cable sleeve retainer in the handle bracket.

NOTE: The outside handle cable is marked with red tape. It must be attached to the latch at the lowest point. This is marked with a “R” on the latch.

(4) Connect the outside handle cable on the latch assembly. Hook the swedged cable end on the latch link and gently push the cable sleeve retainer in the latch bracket.
(5) Trace the outside handle cable along its routing path and install on its retaining clips and position foam insulators. Use previously made schematic as a guide or remove the opposite side door trim panel and use that door as a guide.

CAUTION: Be certain replacement cable is routed and retained correctly and foam insulators are properly positioned.

(6) Place the watershield into position and press securely to adhesive making sure to properly route wiring and linkages.
(7) Install the appropriate side door trim panel on the vehicle. (Refer to 23 - BODY/DOORS - SLIDING/TRIM PANEL - INSTALLATION)
(8) Install stop bumper (Refer to 23 - BODY/DOORS - SLIDING/STOP BUMPER - INSTALLATION).
(9) Connect the negative battery cable.

INSIDE HANDLE CABLE

REMOVAL

NOTE: For power sliding door procedures refer to POWER SLIDING DOOR SYSTEM in the ELECTRICAL section.

(1) Disconnect and isolate the negative battery cable.
(2) Remove the appropriate side door trim panel from the vehicle. (Refer to 23 - BODY/DOORS - SLIDING/TRIM PANEL - REMOVAL)
(3) Peel watershield away from adhesive around perimeter of inner door panel.
(4) Remove the inside handle assembly from the side door. (Refer to 23 - BODY/DOORS - SLIDING/INSIDE LATCH HANDLE - REMOVAL)
(5) Disconnect the inside handle cable from the handle assembly. Gently pry cable sleeve retainer out

INSIDE HANDLE CABLE (Continued)

of the handle bracket and then unhook swedged cable end from the handle link.

(6) Open the side door and remove the latch assembly. Refer to the Power Side Doors section for the procedure.

CAUTION: Make note of cable routing and foam insulator placement. This will prove helpful when reinstalling replacement cable. Be certain replacement cable is routed and retained correctly.

(7) Trace the inside handle cable along its routing path and disconnect from its retaining clips.

(8) Disconnect the inside handle cable from the latch assembly. Gently pry cable sleeve retainer out of the latch mounting bracket and then unhook swedged cable end from the latch link.

(9) Remove the inside handle cable from the side door.

INSTALLATION

NOTE: For power sliding door procedures refer to POWER SLIDING DOOR SYSTEM in the ELECTRICAL section.

(1) Match the replacement cable up against the old cable to verify the correct part.

(2) Position the inside handle cable on the side door.

(3) Connect the inside handle cable on the handle assembly. Hook the swedged cable end on the handle link and gently push the cable sleeve retainer in the handle bracket.

(4) Install the inside handle assembly on the side door. (Refer to 23 - BODY/DOORS - SLIDING/INSIDE LATCH HANDLE - INSTALLATION)

NOTE: The inside handle cable is marked with blue tape and must be attached to the latch at the center (just above the lower cable). This position is marked with a "B" on the latch.

(5) Connect the inside handle cable on the latch assembly. Hook the swedged cable end on the latch link and gently push the cable sleeve retainer in the latch bracket.

(6) Trace the inside handle cable along its routing path and install on its retaining clips and position foam insulators. Use previously made schematic as a guide or remove the opposite side door trim panel and use that door as a guide.

CAUTION: Be certain replacement cable is routed and retained correctly and foam insulators are properly positioned.

(7) Install the latch assembly. Refer to the Power Side Doors section for the procedure.

(8) Place the watershield into position and press securely to adhesive making sure to properly route wiring and linkages.

(9) Install the appropriate side door trim panel on the vehicle. (Refer to 23 - BODY/DOORS - SLIDING/TRIM PANEL - INSTALLATION)

(10) Connect the negative battery cable.

HOLD OPEN LATCH CABLE

REMOVAL

NOTE: For power sliding door procedures refer to POWER SLIDING DOOR SYSTEM in the ELECTRICAL section.

(1) Disconnect and isolate the negative battery cable.

(2) Remove the appropriate side door trim panel from the vehicle. (Refer to 23 - BODY/DOORS - SLIDING/TRIM PANEL - REMOVAL)

(3) Peel watershield away from adhesive around perimeter of inner door panel.

(4) Open the side door and remove the latch assembly. (Refer to 8 - ELECTRICAL/POWER DOORS/LATCH - REMOVAL)

CAUTION: Make note of cable routing and foam insulator placement. This will prove helpful when reinstalling replacement cable. Be certain replacement cable is routed and retained correctly.

(5) Trace the hold open latch cable along its routing path and disconnect from its retaining clips.

(6) Disconnect the hold open latch cable from the latch assembly. Gently pry cable sleeve retainer out of the latch mounting bracket and then unhook swedged cable end from the latch link.

(7) Remove the hold open latch from the side door. (Refer to 23 - BODY/DOORS - SLIDING/HOLD OPEN LATCH - REMOVAL)

(8) Disconnect the hold open latch cable from the hold open latch. Gently pry cable sleeve retainer out of the handle bracket and then unhook swedged cable end from the latch link.

(9) Remove the hold open latch cable from the side door.

INSTALLATION

NOTE: For power sliding door procedures refer to POWER SLIDING DOOR SYSTEM in the ELECTRICAL section.

HOLD OPEN LATCH CABLE (Continued)

(1) Match the replacement cable up against the old cable to verify the correct part.
(2) Position the hold open latch cable on the side door.

NOTE: The hold open latch cable is marked with white tape. It must be attached to the upper most cable attachment at the latch. This position is marked with a "W" on the latch.

(3) Connect the hold open latch cable on the hold open latch assembly. Hook the swedged cable end on the latch link and gently push the cable sleeve retainer in the latch bracket.
(4) Install the hold open latch on the side door.(Refer to 23 - BODY/DOORS - SLIDING/HOLD OPEN LATCH - INSTALLATION)
(5) Connect the hold open latch cable on the latch assembly. Hook the swedged cable end on the latch link and gently push the cable sleeve retainer in the latch bracket.
(6) Trace the outside handle cable along its routing path and install on its retaining clips and position foam insulators. Use previously made schematic as a guide or remove the opposite side door trim panel and use that door as a guide.

CAUTION: Be certain replacement cable is routed and retained correctly and foam insulators are properly positioned.

(7) Install the latch assembly. (Refer to 8 - ELECTRICAL/POWER DOORS/LATCH - INSTALLATION)
(8) Place the watershield into position and press securely to adhesive making sure to properly route wiring and linkages.
(9) Install the appropriate side door trim panel on the vehicle. (Refer to 23 - BODY/DOORS - SLIDING/TRIM PANEL - INSTALLATION)
(10) Connect the negative battery cable.

DECKLID/HATCH/LIFTGATE/TAILGATE

TABLE OF CONTENTS

page

EXTERIOR HANDLE
REMOVAL 40
INSTALLATION 40
HINGE
REMOVAL 40
INSTALLATION 40
LATCH
REMOVAL 41
INSTALLATION 41
LATCH STRIKER
REMOVAL 41
INSTALLATION 42
LIFTGATE
REMOVAL 42
INSTALLATION 42
LOCK CYLINDER
REMOVAL 42
INSTALLATION 42
SUPPORT CYLINDER
REMOVAL 42
INSTALLATION 43
TRIM PANEL
REMOVAL 43
INSTALLATION 43
SLAM BUMPER
REMOVAL
REMOVAL - BODY SIDE 44
REMOVAL - LIFTGATE SIDE 44
INSTALLATION
INSTALLATION - BODY SIDE 44
INSTALLATION - LIFTGATE SIDE 44

EXTERIOR HANDLE

REMOVAL

(1) Remove liftgate trim panel. (Refer to 23 - BODY/DECKLID/HATCH/LIFTGATE/TAILGATE/ TRIM PANEL - REMOVAL)

(2) Disconnect the exterior handle electrical connectors.

(3) Remove the two outer screws and the two inner screws.

(4) Remove the exterior handle/license plate light assembly.

INSTALLATION

(1) Route the exterior handle electrical connector through the door and position handle.

(2) Install the two out screws and tighten to 3 N·m (22 in. lbs.).

(3) Install the two inner bolts and tighten to 5 N·m (40 in. lbs.).

(4) Connect the electrical connector.

(5) Install the trim panel. (Refer to 23 - BODY/ DECKLID/HATCH/LIFTGATE/TAILGATE/TRIM PANEL - INSTALLATION)

HINGE

REMOVAL

(1) Release liftgate latch and open liftgate.

(2) Support liftgate on a suitable lifting device in the full open position.

(3) Apply several layers of duct tape on the outside of to roof across the gap to the lift gate to hold the liftgate in position.

(4) Remove bolts attaching liftgate hinge to roof header.

(5) Disconnect VTSS switch from the body harness.

(6) Remove bolts attaching hinge to liftgate (Fig. 1).

(7) Remove hinge from vehicle.

INSTALLATION

(1) If necessary, paint replacement hinge before installation.

(2) Place hinge in position on vehicle.

(3) Align hinge to marks on liftgate.

(4) Install bolts attaching hinge to liftgate (Fig. 1). Tighten bolts to 33 N·m (24 ft. lbs.) torque.

(5) Align hinge to marks on roof header.

HINGE (Continued)

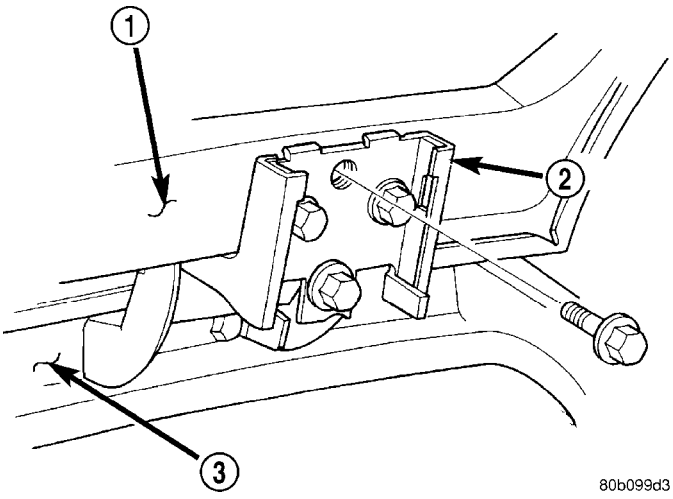

Fig. 1 LIFTGATE HINGE

1 - LIFTGATE
2 - HINGE
3 - REAR ROOF HEADER

(6) Install bolts attaching liftgate hinge to roof header. Tighten outer two bolts to 33 N·m (24 ft. lbs.) torque. The sheet medal screw at center 12 N·m (105 in. lbs.)

(7) Remove duct tape from roof and liftgate.

(8) Verify liftgate alignment. Refer to Liftgate Remove and Installation for proper gap measurements.

LATCH

REMOVAL

(1) Remove liftgate trim panel.

(2) Disengage outside key cylinder link from clip on latch.

(3) Disconnect wire connector from liftgate latch (Fig. 2).

(4) Remove screws attaching latch to liftgate.

(5) Remove latch from vehicle.

INSTALLATION

(1) Engage key cylinder link and place latch in position on vehicle.

(2) Install screws attaching latch to liftgate. Tighten to 11 N·m (95 in. lbs.) torque.

(3) Connect wire connector to liftgate latch.

(4) Verify liftgate fit and operation. Adjust as necessary.

(5) Install liftgate trim panel.

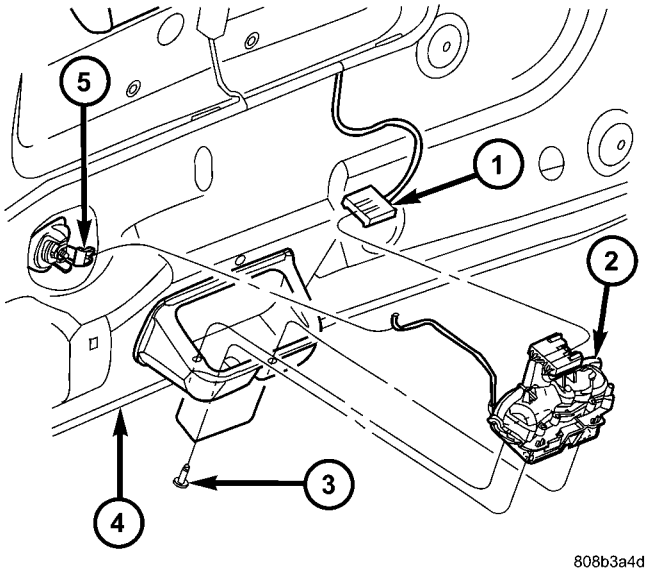

Fig. 2 LIFTGATE LATCH

1 - ELECTRICAL CONNECTOR
2 - LIFTGATE LATCH
3 - SCREW
4 - LIFTGATE
5 - LIFTGATE LOCK CYLINDER

LATCH STRIKER

REMOVAL

(1) Open liftgate.

(2) Mark outline of striker on sill to aid installation.

(3) Remove screws attaching striker to sill (Fig. 3).

(4) Remove striker from vehicle.

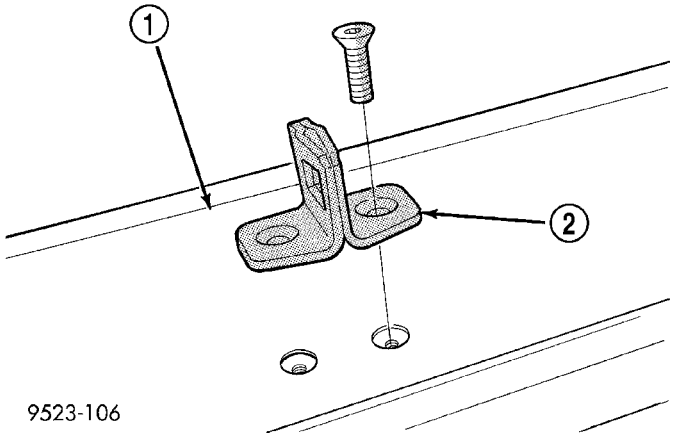

Fig. 3 LIFTGATE LATCH STRIKER

1 - LIFTGATE SILL
2 - LIFTGATE STRIKER

LATCH STRIKER (Continued)

INSTALLATION

(1) Place striker in position on vehicle.
(2) Align striker to outline mark on sill.
(3) Install screws attaching striker to sill. Tighten screws to 28 N·m (21 ft. lbs.) torque.
(4) Verify liftgate alignment and operation.

LIFTGATE

REMOVAL

(1) Disconnect and isolate the battery negative cable.
(2) Release liftgate latch and open liftgate.
(3) Remove liftgate upper frame molding.
(4) Remove screws attaching liftgate wire connector to rear header.
(5) Disconnect liftgate wire harness from body wire harness.
(6) Disconnect rear window washer hose from spray nozzle.
(7) Support liftgate on a suitable lifting device.
(8) Disconnect power liftgate link, if equipped.
(9) Remove screws attaching support cylinders to liftgate.
(10) Remove bolts attaching liftgate hinge to roof header (Fig. 4).
(11) With assistance, remove liftgate from vehicle.

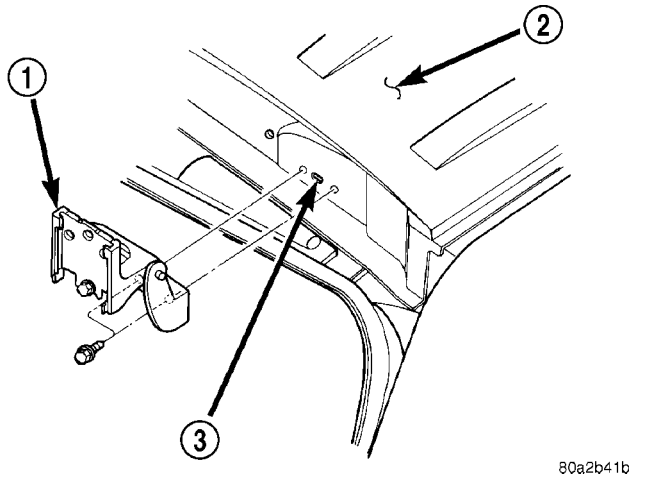

Fig. 4 LIFTGATE

1 - HINGE
2 - ROOF
3 - NET HOLE OR SLOT

INSTALLATION

(1) With assistance, place liftgate in position on vehicle.
(2) Install bolts attaching liftgate hinge to roof header. Tighten bolts to 33 N·m (24 ft. lbs.) torque.
(3) Install screws attaching support cylinders to liftgate. Tighten bolts to 28 N·m (21 ft. lbs.) torque.
(4) Reconnect power liftgate link, if equipped.
(5) Remove lifting device from under liftgate.
(6) Connect liftgate wire harness into body wire harness.
(7) Install screws attaching wire connector to rear header.
(8) Connect rear window washer hose onto spray nozzle.
(9) Install liftgate upper frame molding.
(10) Install battery negative cable.
(11) Verify liftgate alignment. The liftgate should have a gap to adjacent panels and fit flush across the gaps. The gap is; (Refer to 23 - BODY/BODY STRUCTURE/GAP AND FLUSH - SPECIFICATIONS).

- 8.0 mm ± 2.5 to the rear fascia,
- 8.0 mm ± 2.0 to the roof,
- 2.0 mm ± 0.5 mm to the aperture.

LOCK CYLINDER

REMOVAL

(1) Remove the liftgate trim panel. (Refer to 23 - BODY/DECKLID/HATCH/LIFTGATE/TAILGATE/TRIM PANEL - REMOVAL)
(2) Disconnect the electrical connector.
(3) Disconnect the latch rod.
(4) Rotate plastic lock cylinder nut one quarter turn and remove nut and spring washer.
(5) Remove the lock cylinder from the liftgate.

INSTALLATION

(1) Install lock cylinder into liftgate.
(2) Install the plastic lock cylinder lock nut, spring washer and rotate one quarter turn.
(3) Connect the electrical connector.
(4) Connect the latch rod.
(5) Install the trim panel. (Refer to 23 - BODY/DECKLID/HATCH/LIFTGATE/TAILGATE/TRIM PANEL - INSTALLATION)
(6) Verify lock cylinder operation.

SUPPORT CYLINDER

REMOVAL

(1) Release liftgate latch and open liftgate.
(2) Support liftgate on a suitable lifting device in the full open position.
(3) Pull liftgate opening weatherstrip from D-pillar flange next to prop assembly end pivot.
(4) Remove bolt attaching end pivot to D-pillar (Fig. 5).
(5) Remove bolt attaching prop assembly to liftgate.
(6) Remove prop assembly from vehicle.

SUPPORT CYLINDER (Continued)

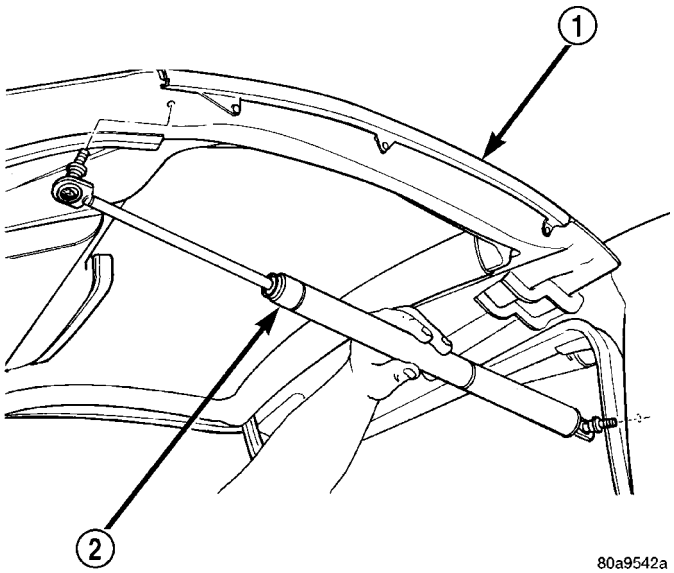

Fig. 5 LIFTGATE PROP ASSEMBLY

1 - LIFTGATE
2 - PROP ASSEMBLY

INSTALLATION

Ensure that the cylinder end is attached to the D-pillar and the shaft end is attached to the liftgate.

(1) Place prop assembly in position.

(2) Install bolt attaching prop assembly to liftgate.

(3) Install bolt attaching end pivot to D-pillar. Tighten bolts to 28 N·m (21 ft. lbs.) torque.

(4) Install liftgate opening weatherstrip to D-pillar flange next to prop assembly end pivot.

(5) Close liftgate. Check liftgate operation.

TRIM PANEL

REMOVAL

(1) Remove the bolt attaching the lift motor link, if equipped (Fig. 6).

(2) Remove liftgate upper frame molding (Fig. 7).

(3) Remove assist handle screws.

(4) Disengage hidden clips holding trim panel to liftgate from around perimeter or liftgate (Fig. 7).

(5) Disconnect wire connector from lamps.

(6) Remove liftgate trim panel from vehicle.

INSTALLATION

(1) Place liftgate trim panel in position on vehicle.

(2) Engage hidden clips to hold trim panel to liftgate and fasteners around perimeter of liftgate (Fig. 7).

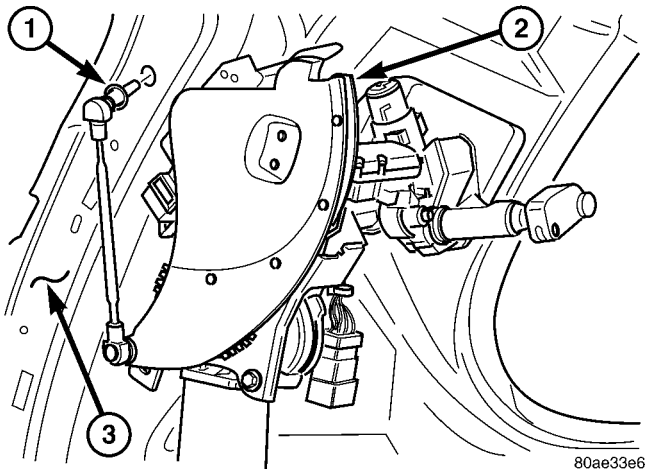

Fig. 6 LIFTGATE MOTOR

1 - LIFTGATE MOTOR LINK BOLT
2 - LIFTGATE MOTOR
3 - LIFTGATE

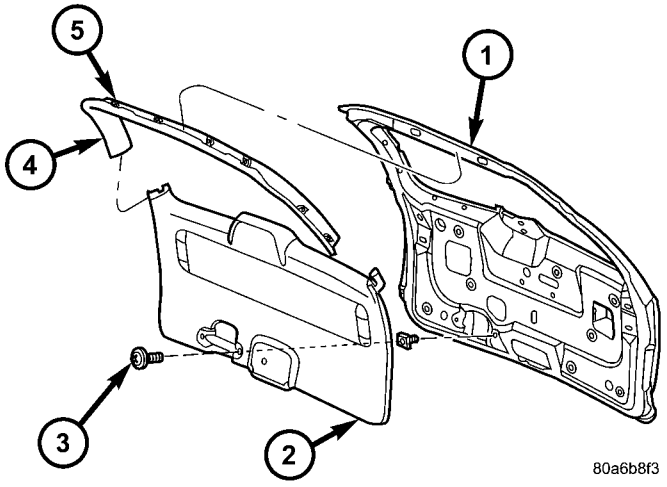

Fig. 7 LIFTGATE TRIM

1 - LIFTGATE
2 - LOWER TRIM PANEL
3 - ASSIST HANDLE SCREWS
4 - UPPER TRIM
5 - UPPER TRIM CLIPS

(3) Connect wire connector into lamp.

(4) Install courtesy lamps into liftgate trim.

(5) Install screws to hold assist handle to liftgate.

(6) Install upper frame side moldings.

(7) Install liftgate upper frame molding.

(8) Install the bolt attaching the lifgate motor link and tighten to 28 N·m (21 ft. lbs.)

SLAM BUMPER

REMOVAL

REMOVAL - BODY SIDE

(1) Open liftgate.
(2) Remove liftgate stop bumper body side attaching bolts (Fig. 8).
(3) Remove liftgate stop bumper.

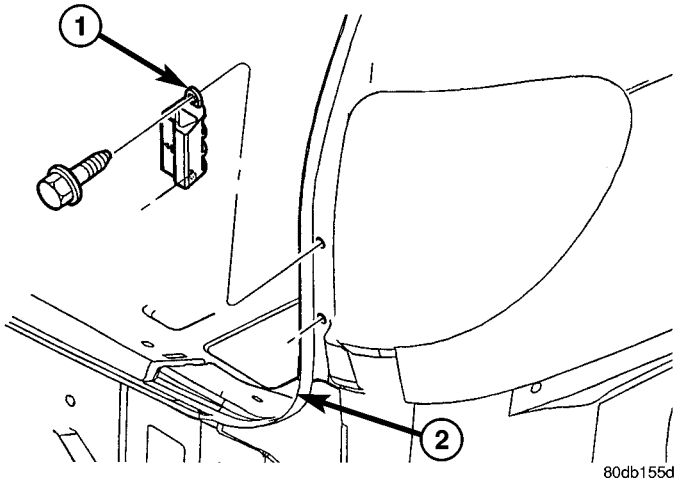

Fig. 8 LIFTGATE STOP BUMPER - BODY SIDE

1 - LIFTGATE STOP BUMPER
2 - LIFTGATE OPENING

REMOVAL - LIFTGATE SIDE

(1) Open liftgate.
(2) Remove liftgate stop bumper liftgate side attaching rivets by drilling out old rivets.
(3) Remove liftgate stop bumper.

INSTALLATION

INSTALLATION - BODY SIDE

(1) Place liftgate stop bumper into position.
(2) Install bolts attaching liftgate stop bumper to body side (Fig. 8).
(3) Close liftgate.

INSTALLATION - LIFTGATE SIDE

(1) Place liftgate stop bumper into position.
(2) Install rivets attaching liftgate stop bumper to liftgate.

NOTE: Verify that ships or parts of drilled out rivet does not rattle in the liftgate. If there is rattling sound, detrim liftgate and retrieve debris.

(3) Close liftgate.

EXTERIOR

TABLE OF CONTENTS

page

BODY SIDE MOLDINGS
REMOVAL 45
INSTALLATION 46
COWL GRILLE
REMOVAL 50
INSTALLATION 50
EXTERIOR NAME PLATES - TAPE ATTACHED
REMOVAL 51
INSTALLATION 51
EXTERIOR NAME PLATES - ADHESIVE ATTACHED
REMOVAL 51
INSTALLATION 51
FRONT FENDER
REMOVAL 51
INSTALLATION 52
FUEL FILL DOOR
REMOVAL 52
INSTALLATION 52
FUEL FILL DOOR BLOCKER LATCH
REMOVAL 53
INSTALLATION 53
FUEL FILL DOOR BLOCKER LATCH STRIKER
REMOVAL 53
INSTALLATION 53
FUEL FILL DOOR BLOCKER LOCKOUT LINK
REMOVAL 54
INSTALLATION 54
GRILLE
DESCRIPTION 55

page

REMOVAL 55
INSTALLATION 55
UPPER RADIATOR CROSSMEMBER
REMOVAL 56
INSTALLATION 56
FRONT WHEELHOUSE SPLASH SHIELD
REMOVAL 57
INSTALLATION 57
LUGGAGE RACK RISER
REMOVAL 57
INSTALLATION 58
LUGGAGE RACK CROSSBAR
REMOVAL 58
INSTALLATION 59
REAR QUARTER PANEL/FENDER AIR EXHAUSTER
DESCRIPTION 59
REMOVAL 59
INSTALLATION 60
ROOF JOINT MOLDING
REMOVAL 60
INSTALLATION 60
SIDE VIEW MIRROR
REMOVAL 60
INSTALLATION 60
GLASS-OUTSIDE REARVIEW MIRROR
REMOVAL 61
INSTALLATION 61

BODY SIDE MOLDINGS

REMOVAL

Refer to (Fig. 1), (Fig. 2), (Fig. 3), (Fig. 4) or (Fig. 5)for proper location of fasteners holding the molding to the wheelhouse lip and rocker panels.

(1) Warm the affected stick on molding and body metal to approximately 38° C (100° F) using a suitable heat lamp or heat gun.

(2) If equipped, remove pop rivets holding molding edge to wheelhouse lip.

(3) Pull stick on molding from painted surface.

(4) Remove adhesive tape residue from painted surface of vehicle. Use a 3M Scotch-Brite™ Molding Adhesive and Stripe Removal Disc, or equivalent, to clean adhesive residue from painted surfaces. These products are available from automotive paint suppliers. Refer to instructions supplied with the specific product for proper usage.

BODY SIDE MOLDINGS (Continued)

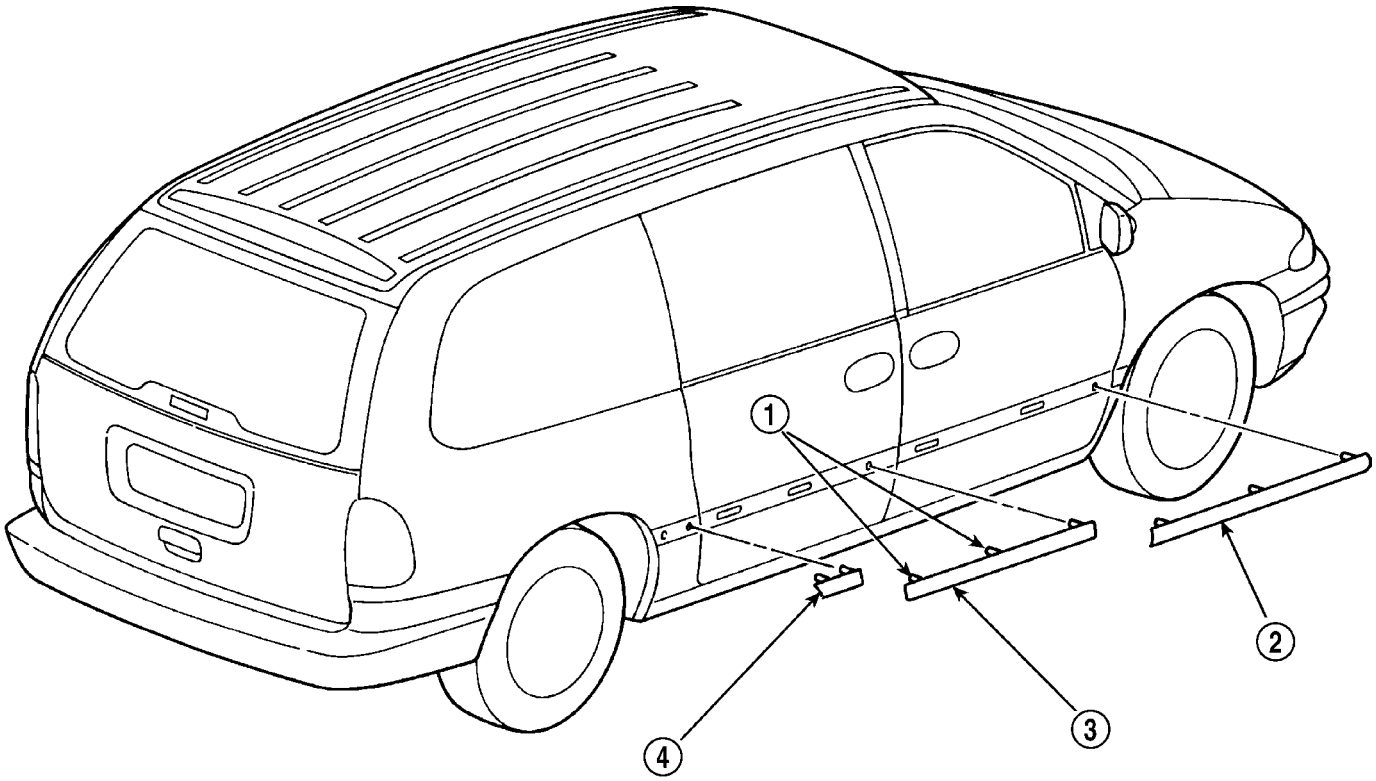

800dfaa1

Fig. 1 BODY SIDE MOLDINGS - BASE TYPICAL

1 - GUIDE PINS
2 - FRONT DOOR MOLDING
3 - SLIDING DOOR MOLDING
4 - QUARTER PANEL MOLDING

INSTALLATION

Refer to (Fig. 1), (Fig. 2), (Fig. 3), (Fig. 4) or (Fig. 5)for proper location of fasteners to hold the molding to the wheelhouse lip and rocker panels.

(1) If molding is to be reused;

(a) Remove tape residue from molding.

(b) Clean back of molding with Mopar® Super Kleen, or equivalent.

(c) Wipe molding dry with lint free cloth.

(d) Apply a single coat of Mopar® TPO Molding Prep to tape side of molding and allow to dry thoroughly.

(e) Apply new body side molding (two sided adhesive) tape to back of molding.

(2) Clean body surface with Mopar® Super Kleen, or equivalent. Wipe surface dry with lint free cloth.

(3) Remove protective cover from tape on back of molding.

(4) Apply molding to body from front to rear, inserting locator pins into hole in body panel.

(5) Using a roller tool, roll molding onto body panel with enough force to assure adhesion. Do not apply excessive force, or damage to body panels may result.

(6) Install pop rivets to hold molding edge to wheelhouse lip, if necessary.

BODY SIDE MOLDINGS (Continued)

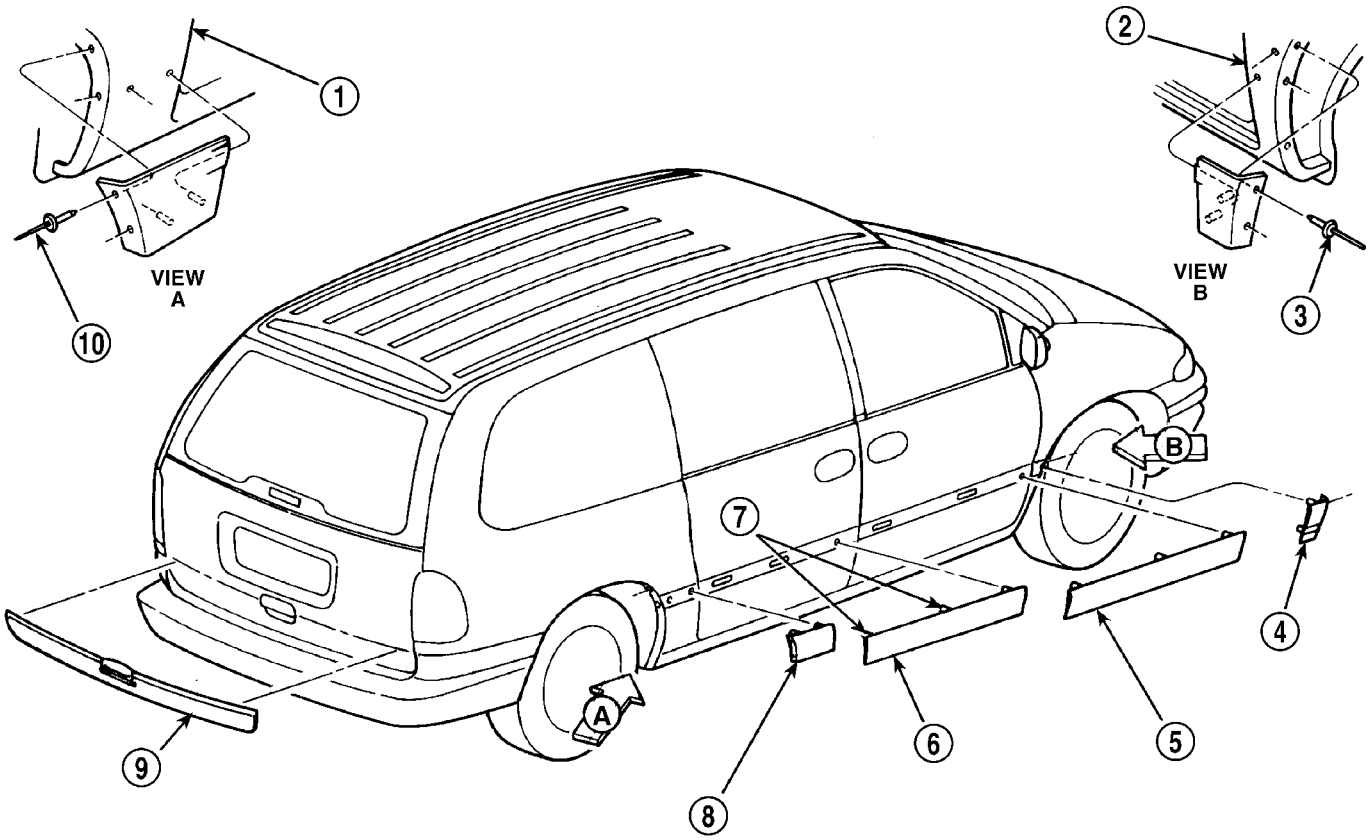

Fig. 2 BODY SIDE MOLDINGS - HIGHLINE TYPICAL

1 - QUARTER PANEL
2 - FRONT FENDER
3 - POP-RIVET
4 - FENDER MOLDING
5 - FRONT DOOR MOLDING
6 - SLIDING DOOR MOLDING
7 - GUIDE PINS
8 - QUARTER PANEL MOLDING
9 - LIFTGATE MOLDING
10 - POP-RIVET

BODY SIDE MOLDINGS (Continued)

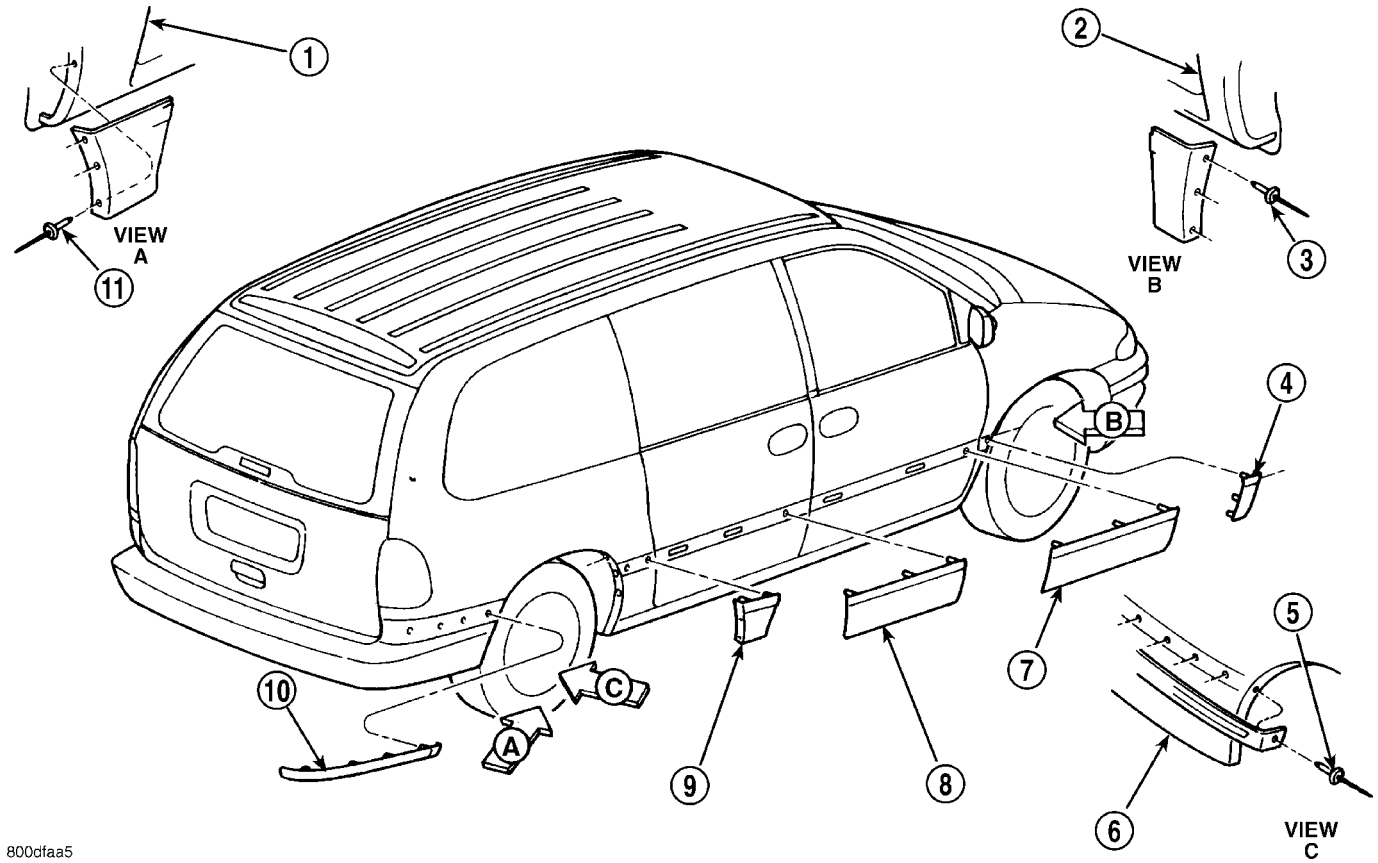

Fig. 3 BODY SIDE MOLDINGS - PREMIUM TYPICAL

1 - QUARTER PANEL
2 - FRONT FENDER
3 - POP-RIVET
4 - FENDER MOLDING
5 - POP-RIVET
6 - FASCIA
7 - FRONT DOOR MOLDING
8 - SLIDING DOOR MOLDING
9 - QUARTER PANEL MOLDING
10 - FASCIA MOLDING
11 - POP-RIVET

BODY SIDE MOLDINGS (Continued)

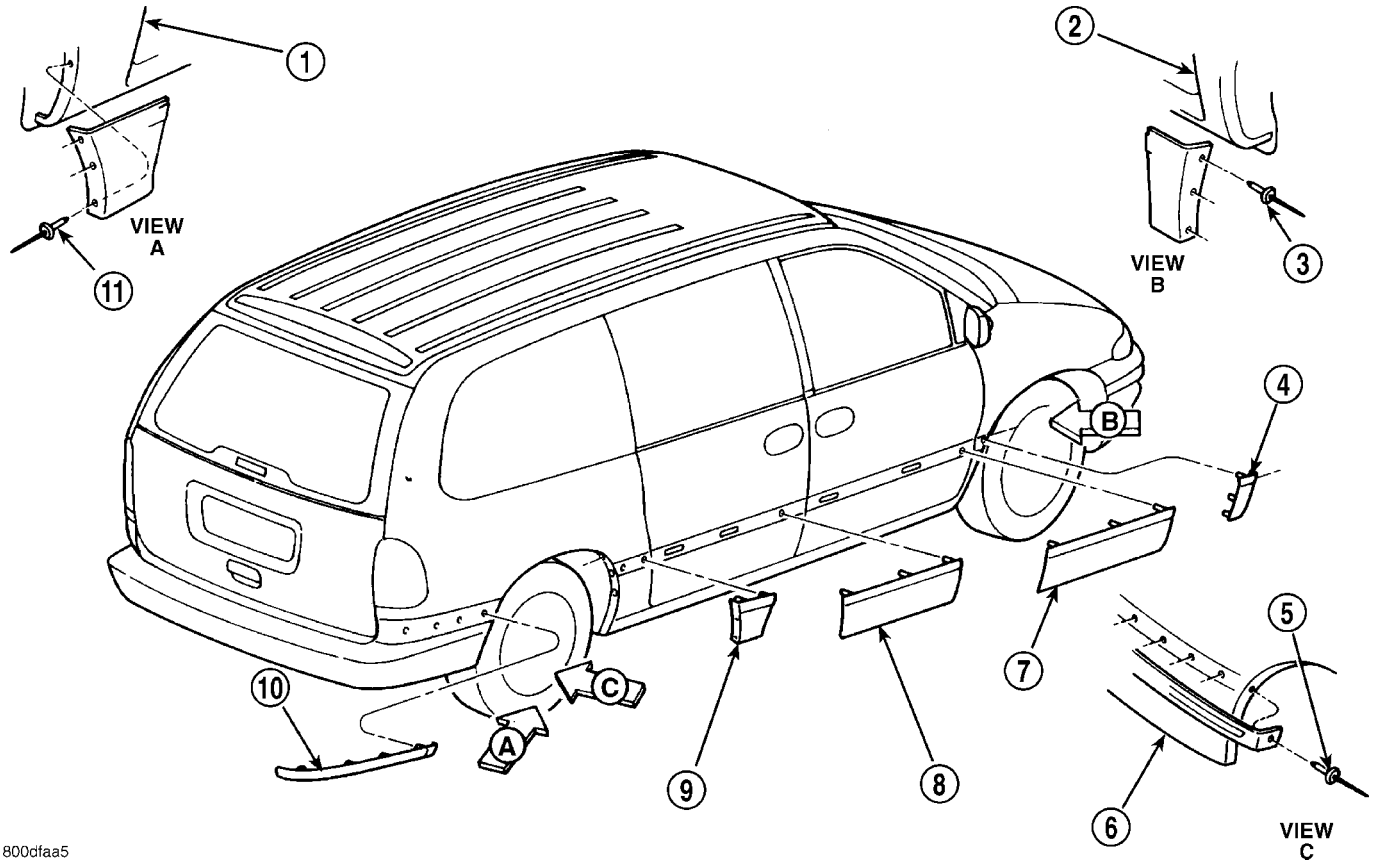

Fig. 4 BODY SIDE MOLDINGS - PREMIUM TYPICAL

1 - QUARTER PANEL
2 - FRONT FENDER
3 - POP-RIVET
4 - FENDER MOLDING
5 - POP-RIVET
6 - FASCIA
7 - FRONT DOOR MOLDING
8 - SLIDING DOOR MOLDING
9 - QUARTER PANEL MOLDING
10 - FASCIA MOLDING
11 - POP-RIVET

BODY SIDE MOLDINGS (Continued)

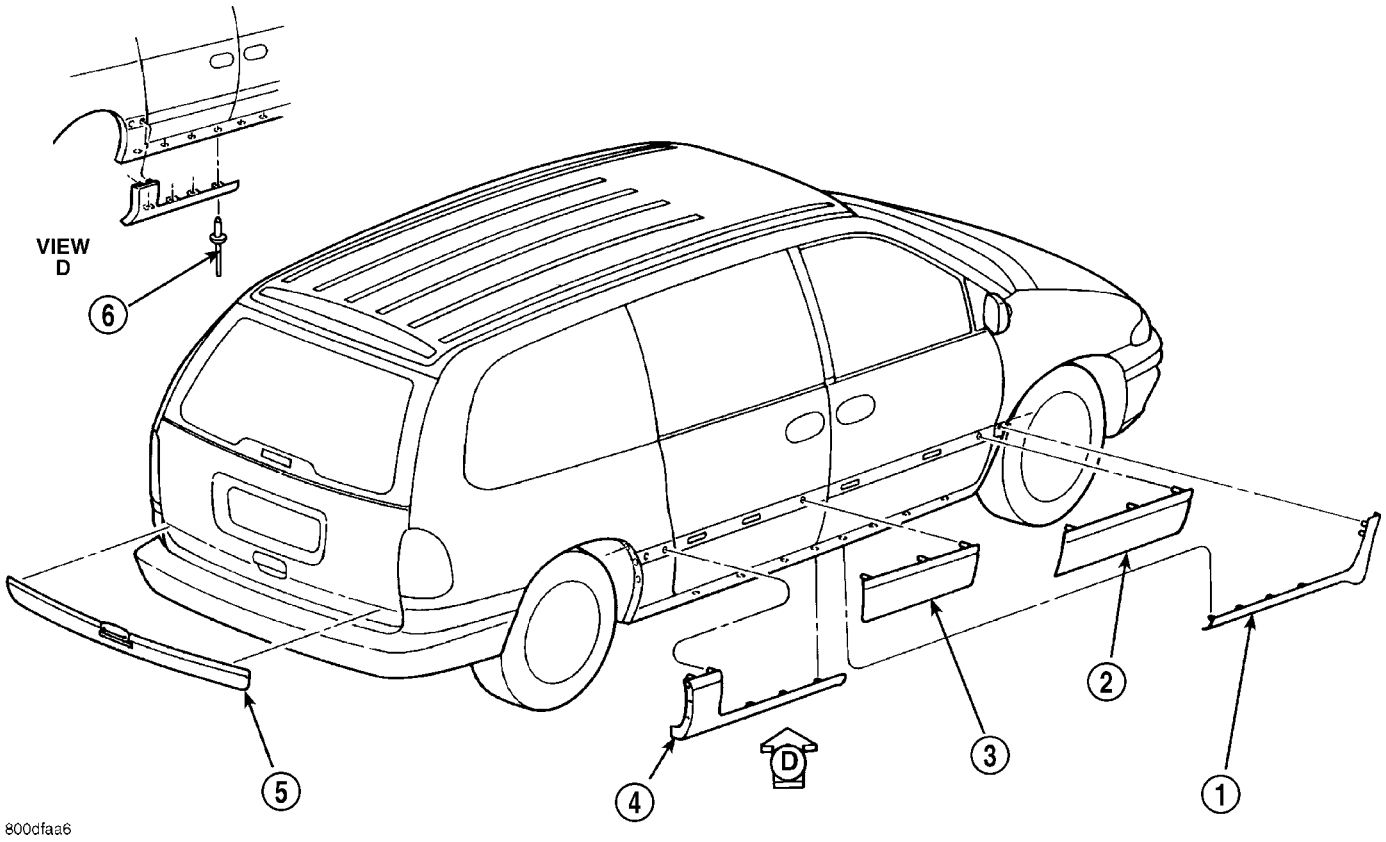

Fig. 5 BODY SIDE MOLDINGS WITH APPLIQUE - TYPICAL

1 - FRONT ROCKER PANEL APPLIQUE
2 - FRONT DOOR MOLDING
3 - SLIDING DOOR MOLDING
4 - REAR ROCKER PANEL APPLIQUE
5 - LIFTGATE MOLDING
6 - POP-RIVET

COWL GRILLE

REMOVAL

(1) Remove wiper arms. (Refer to 8 - ELECTRICAL/WIPERS/WASHERS/WIPER ARMS - REMOVAL)

(2) Remove four (4) screws securing cowl cover to wiper module (Fig. 6).

(3) Disengage quarter turn fasteners at outboard ends of cowl grill from body.

(4) Release hood latch and open hood.

CAUTION: To prevent hood scratching of cowl grille before removal, cover outboard exterior ends of cowl grille with masking tape or equivalent method.

NOTE: Do not over bend cowl grille during removal. Bend cowl grille just enough to clear top of wiper pivot shaft and bottom rear corner of hood.

(5) Remove cowl grill by raising above driver side wiper pivot shaft and swinging away towards engine compartment. The cowl grille will need to be bent on outboard end to clear simultaneously top of wiper pivot shaft and bottom corner of hood.

(6) Close hood. Do not latch. Remove outboard screws. (Fig. 7).

(7) Disconnect washer hose in line connector.

(8) Disconnect washer hose and grommet from hole in wiper module and pull out.

(9) Remove cowl grille by raising over opposite wiper pivot shaft and removing away from vehicle.

(10) Remove cowl cover from vehicle.

INSTALLATION

(1) Reverse removal procedure.

(2) When installing cowl cover over wiper module, make sure fore aft locator on the underside of cowl grill seat into the locator grooves on top of wiper module.

(3) Start all cowl grille mounting screws by hand before torquing to specifications.

(4) Assure washer hose is properly routed and not pinched.

(5) Center cowl grille to body and windshield.

(6) Assure “arrow” indicator head of quarter turn fasteners is pointing toward windshield.

COWL GRILLE (Continued)

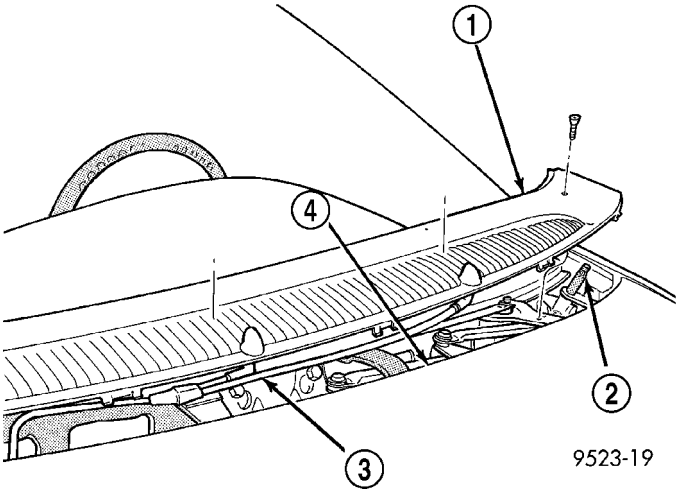

Fig. 6 COWL COVER

1 - COWL COVER
2 - WIPER PIVOT
3 - WASHER HOSES
4 - HOOD

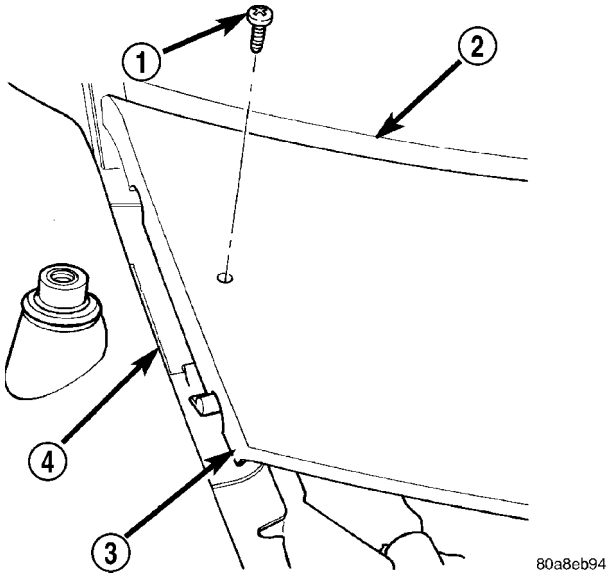

Fig. 7 COWL COVER RETAINERS

1 - SCREW
2 - WINDSHIELD
3 - COWL COVER
4 - FRONT FENDER

(7) Tighten screw to 1.2 N·m (11 in. lbs.) torque.

(8) Install the wiper arms. (Refer to 8 - ELECTRICAL/WIPERS/WASHERS/WIPER ARMS - INSTALLATION)

(9) Check for proper spray pattern from washer nozzles.

EXTERIOR NAME PLATES - TAPE ATTACHED

REMOVAL

(1) Mark reference points before removing.

(2) Using a heat gun gently apply heat in a circular motion to loosen the adhesive bond.

(3) Using a nonmetallic prying device, such as a plastic or wood trim stick gently pry up at corners and remove.

(4) Clean off all traces of adhesive or double sided tape from the panel with a general purpose adhesive remover.

INSTALLATION

(1) Clean panel surface with isopropy alcohol.

(2) Align badgeing to reference points.

(3) Install and press securely to full adhesive contact

(4) Clean away any reference points.

EXTERIOR NAME PLATES - ADHESIVE ATTACHED

REMOVAL

(1) Mark reference points before removing.

(2) Using a heat gun gently apply heat in a circular motion to loosen the adhesive bond.

(3) With your fingernail lift up and peel away badgeing/tape from panel, using a heat gun as you go.

(4) Clean off all traces of adhesive from the panel(s) with a general purpose adhesive remover.

INSTALLATION

(1) Clean panel surface with isopropy alcohol.

(2) Remove paper carrier and align badgeing/tape to reference points or adjacent panel.

(3) Install and press securely, using a plastic spreader to eliminate all air bubbles.

(4) Remove top protective carrier.

(5) Clean away any reference points.

FRONT FENDER

REMOVAL

(1) Remove headlamp housing. (Refer to 8 - ELECTRICAL/LAMPS/LIGHTING - EXTERIOR/HEADLAMP UNIT - REMOVAL)

(2) Remove mirror bezel

(3) Remove mud guard.

(4) Remove inner splash shield.

(5) Remove fender to fascia nuts.

FRONT FENDER (Continued)

(6) Remove outboard cowl grille/fender bracket screw and antenna right side only.
(7) Remove fender bolt to lower rocker panel.
(8) Remove fender bolt to lower cowl.
(9) Support/remove hood.
(10) Pull fascia away from fender.
(11) Remove bolts attaching fender to upper rail.
(12) Remove fender from vehicle (Fig. 8).

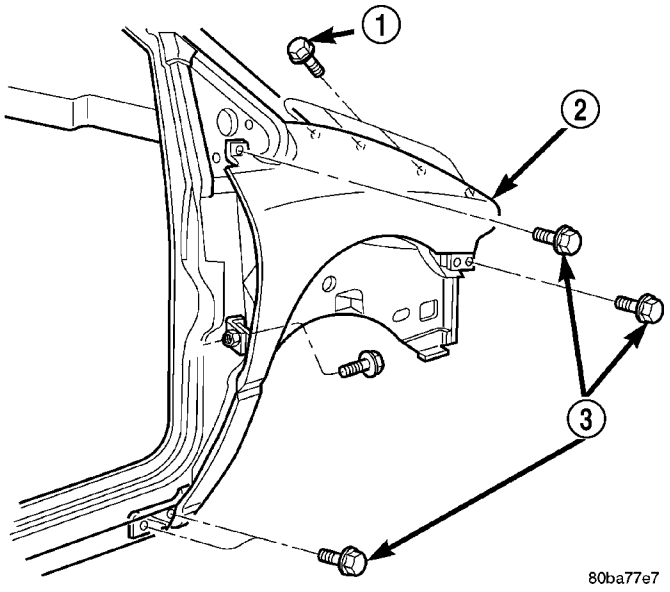

Fig. 8 FENDER

1 - FASTENERS
2 - FENDER
3 - FASTENERS

INSTALLATION

(1) Place fender in position on vehicle.
(2) From inside engine compartment, start the center upper rail bolt. install all the bolts attaching fender to upper rail and tighten.
(3) Install fender to lower cowl panel bolt.
(4) Install fender to rocker panel bolt.
(5) Place fascia into position.
(6) Install hood/remove support.
(7) Install outboard cowl grille/fender bracket screw and install antenna right side only.
(8) Install fender to fascia nuts.
(9) Install inner splash shield.
(10) Install mud guard.
(11) Install headlamp assembly. (Refer to 8 - ELECTRICAL/LAMPS/LIGHTING - EXTERIOR/ HEADLAMP UNIT - INSTALLATION)
(12) Check fender for flush and gap. (Refer to 23 - BODY/BODY STRUCTURE/GAP AND FLUSH - SPECIFICATIONS).

FUEL FILL DOOR

REMOVAL

(1) Remove left quarter trim panel.
(2) Remove water shield patch covering access hole in C-pillar.
(3) Disengage latch release link from clip on fuel fill blocker latch arm (Fig. 12).
(4) Open fuel fill door.
(5) Remove screws holding fuel fill neck to fuel filler housing.
(6) Position fuel fill neck out of the way.
(7) Reaching inside fuel filler housing, release clips holding housing to quarter panel (Fig. 9).
(8) Remove fuel fill door from vehicle.
(9) Disengage clip holding link to fuel fill door (Fig. 13).
(10) Remove link from fuel fill door.

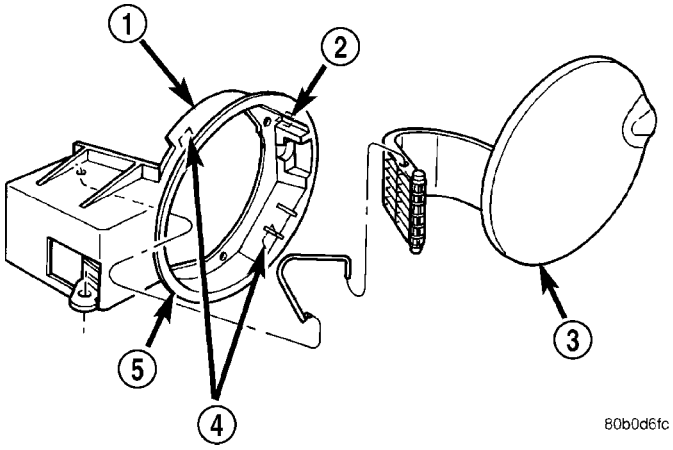

Fig. 9 FUEL FILLER HOUSING AND DOOR

1 - FUEL FILLER HOUSING W/LATCH
2 - CLIP
3 - FUEL FILLER HOUSING DOOR
4 - CLIPS
5 - FIX CLIP

INSTALLATION

(1) Install spring to housing and door
(2) Snap door into housing.
(3) Insert lockout link into clip on fuel fill door.
(4) Engage clip to hold link to fuel fill door.
(5) Insert lockout link through grommet in panel between inner and outer quarter panel.
(6) Close fuel fill door.
(7) Install fuel filler housing to outer quarter panel.
(8) Verify that all clips on fuel filler housing are fully engaged to outer quarter panel.
(9) Place fuel fill neck in position.
(10) Install screws to hold fuel fill neck to fuel filler housing.

FUEL FILL DOOR (Continued)

(11) Engage latch release link into clip on fuel fill blocker latch arm.
(12) Verify fuel fill blocker latch operation.
(13) Install water shield patch to cover access hole in C-pillar.
(14) Install left quarter trim panel.

FUEL FILL DOOR BLOCKER LATCH

REMOVAL

(1) Remove left quarter trim panel.
(2) Remove water shield patch covering access hole in C-pillar.
(3) Disengage latch release link from clip on fuel fill blocker latch arm (Fig. 12).
(4) Remove screws holding fuel fill blocker latch to C-pillar (Fig. 10).
(5) Remove fuel fill blocker latch from vehicle.

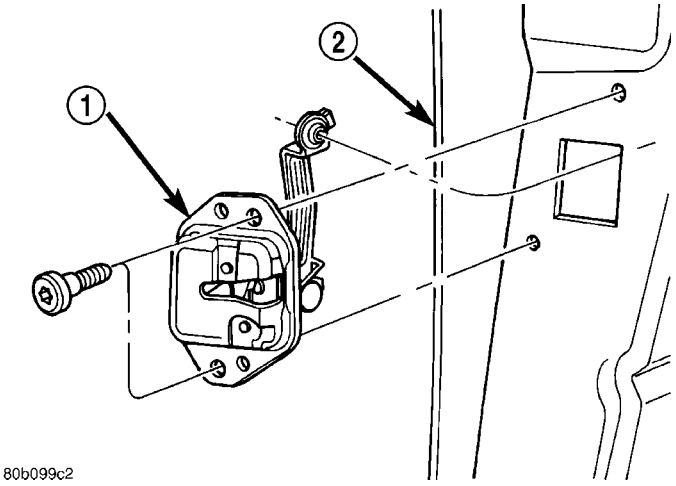

Fig. 10 FUEL FILL

1 - FUEL FILLER BLOCKER LATCH ARM
2 - C-PILLAR

INSTALLATION

(1) Position fuel fill blocker latch on vehicle.
(2) Install screws to hold fuel fill blocker latch to C-pillar.
(3) Engage latch release link into clip on fuel fill blocker latch arm with fuel door in the closed position.
(4) Install water shield patch to cover access hole in C-pillar.
(5) Verify fuel fill blocker latch operation.
(6) Install left quarter trim panel.

FUEL FILL DOOR BLOCKER LATCH STRIKER

REMOVAL

(1) Remove sliding door trim panel.
(2) Remove sound shield as necessary to access striker
(3) Remove screws attaching fuel fill door blocker latch striker to sliding door rear end frame (Fig. 11).
(4) Remove fuel fill door blocker latch striker from vehicle.

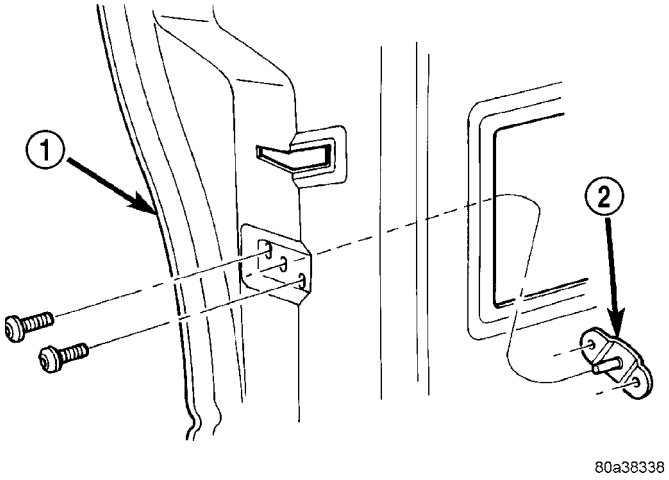

Fig. 11 FUEL FILL DOOR BLOCKER LATCH STRIKER

1 - LEFT SLIDING DOOR
2 - FUEL FILLER STOP STRIKER

INSTALLATION

(1) Position fuel fill door blocker latch striker on vehicle.
(2) Install screws attaching fuel fill door blocker latch striker to sliding door rear end frame.
(3) Install sliding door sound shield.
(4) Install sliding door trim panel.

FUEL FILL DOOR BLOCKER LOCKOUT LINK

REMOVAL

(1) Remove left quarter trim panel.
(2) Remove water shield patch covering access hole in C-pillar.
(3) Disengage fuel filler lockout link from clip on fuel fill blocker latch arm (Fig. 12).
(4) Open fuel fill door.
(5) Remove screws holding fuel filler housing to fuel filler tube neck.
(6) Reaching inside fuel filler housing, release clips holding housing to outer quarter panel.
(7) Remove fuel filler housing and lockout link from vehicle.
(8) Disengage clip holding link to fuel fill door (Fig. 13).
(9) Remove link from fuel fill door.

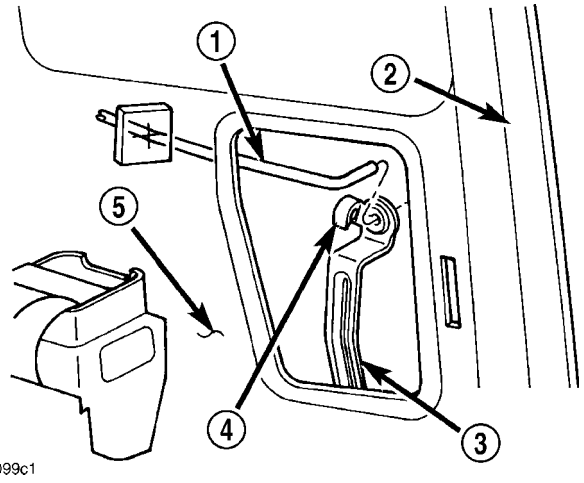

Fig. 12 FUEL FILLER LOCKOUT LINK AT LATCH ARM

1 - FUEL FILLER LOCKOUT LINK
2 - C-PILLAR
3 - FUEL FILLER BLOCKER LATCH ARM
4 - PLASTIC LINK CLIP
5 - INNER QUARTER PANEL

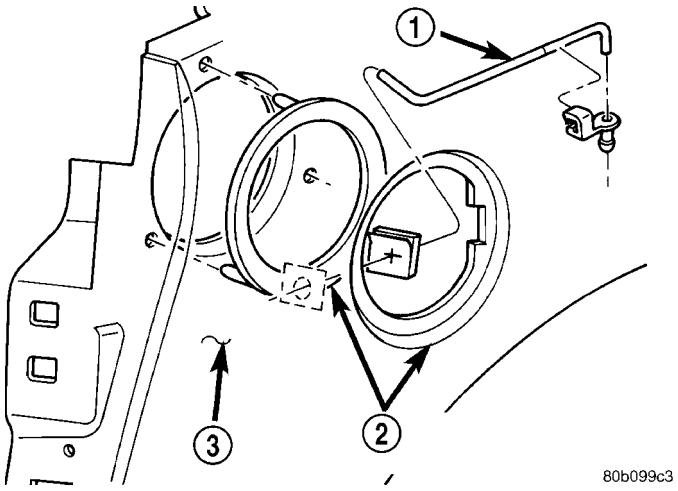

Fig. 13 FUEL FILLER LOCKOUT LINK

1 - FUEL FILLER LOCKOUT LINK
2 - FUEL FILLER OPENING
3 - QUARTER PANEL

INSTALLATION

(1) Insert link into clip on fuel fill door.
(2) Engage clip to hold link to fuel fill door.
(3) Insert lockout link through grommet in panel between inner and outer quarter panel.
(4) Close fuel fill door.
(5) Install fuel filler housing to outer quarter panel.
(6) Verify that all clips on fuel filler housing are fully engaged to outer quarter panel.
(7) Install screws attaching fuel fill housing to fuel filler tube neck.
(8) Engage fuel filler lockout link into clip on fuel fill blocker latch arm.
(9) Install water shield patch covering access hole in C-pillar.
(10) Install left quarter trim panel.

GRILLE

DESCRIPTION

(1) Front grille assembly (Fig. 14).

REMOVAL

(1) Remove front fascia (Refer to 13 - FRAME & BUMPERS/BUMPERS/FRONT FASCIA - REMOVAL).
(2) Remove grille mounting spring clips (Fig. 15).
(3) Remove grille

INSTALLATION

(1) Install grille to front fascia (Fig. 15).
(2) Install front fasica to vehicle.

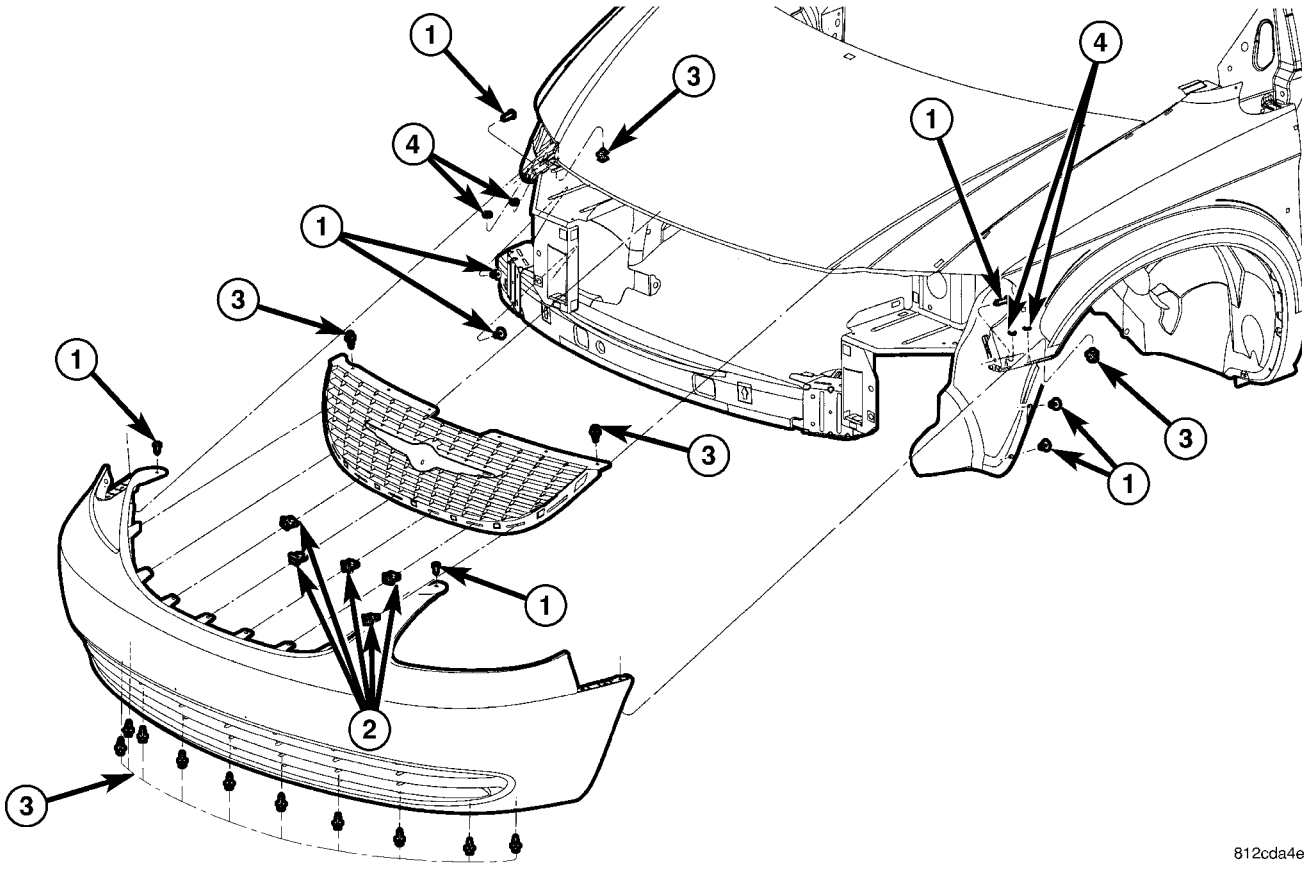

Fig. 14 GRILLE

1 - SCREW(S)
2 - SPRING CLIP(S)
3 - PUSH PIN FASTENER(S)
4 - RETAINER(S)

GRILLE (Continued)

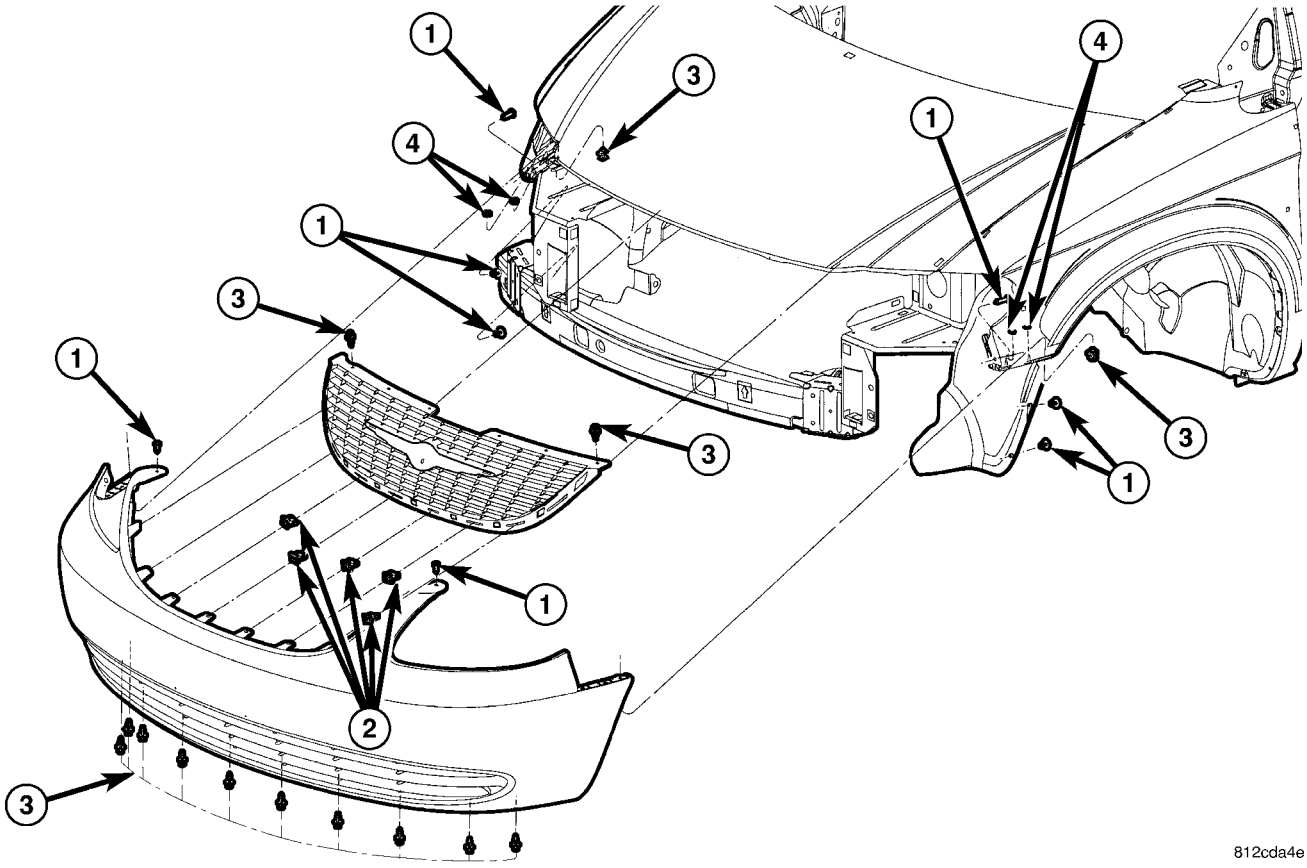

Fig. 15 GRILLE

1 - SCREW(S)
2 - SPRING CLIP(S)
3 - PUSH PIN FASTENER(S)
4 - RETAINER(S)

UPPER RADIATOR CROSSMEMBER

REMOVAL

(1) Release hood latch and open hood.
(2) Remove radiator sight shield.
(3) Remove engine air inlet resonator.
(4) Unclip hood cable from upper radiator crossmember.
(5) Remove bolts attaching hood latch to crossmember and position latch out of the way.
(6) Remove hood prop rod.
(7) Remove screw attaching coolant recovery bottle to crossmember.
(8) Remove bolts attaching radiator isolators to crossmember.
(9) Remove bolts attaching ends of crossmember to radiator closure panel (Fig. 16).
(10) Lift crossmember upward and away from radiator closure panel.
(11) Remove crossmember from vehicle.

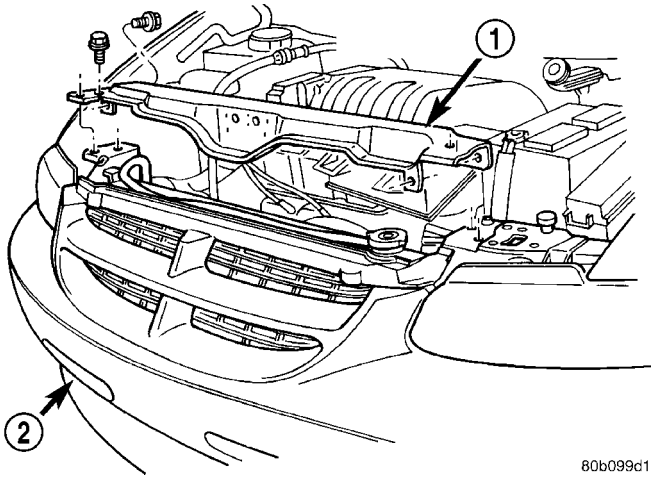

Fig. 16 RADIATOR CLOSURE PANEL CROSSMEMBER

1 - RADIATOR CLOSURE PANEL CROSSMEMBER
2 - FRONT FASCIA

INSTALLATION

(1) Place radiator closure panel crossmember in position on vehicle.

UPPER RADIATOR CROSSMEMBER (Continued)

(2) Insert ends of crossmember between layered metal sections of radiator closure panel at each side of radiator.
(3) Align with paint breaks around bolt heads.
(4) Install bolts attaching ends of crossmember to radiator closure panel (Fig. 16). Tighten bolts to 19 N·m (14 ft. lbs.) torque.
(5) Install bolts attaching radiator isolators to crossmember.
(6) Install screw attaching coolant recovery bottle to crossmember.
(7) Install bolt attaching air cleaner housing to crossmember.
(8) Install engine air inlet resonator.
(9) Install hood prop rod.
(10) Align hood latch by placing latch over net pierce tabs. If alignment is required, flatten tabs.
(11) Install bolts attaching hood latch to crossmember and clip cable. Tighten bolts to 13.5 N·m (10 ft. lbs.) torque.
(12) Install radiator sight shield.
(13) Verify hood latch operation and hood alignment.

FRONT WHEELHOUSE SPLASH SHIELD

REMOVAL

(1) Hoist and support vehicle on safety stands. (Refer to LUBRICATION & MAINTENANCE/HOISTING - STANDARD PROCEDURE).
(2) Remove front wheel.
(3) Remove push pin fasteners attaching splash shield to frame rail forward of suspension.
(4) Remove push pin fasteners attaching splash shield to frame rail rearward of suspension.
(5) Remove screws attaching wheelhouse splash shield to front fender and front bumper fascia.
(6) Remove splash shield from vehicle (Fig. 17).

INSTALLATION

(1) Place splash shield in position on vehicle (Fig. 17).
(2) Install push pin fasteners attaching splash shield to frame rail forward of suspension.
(3) Install push pin fasteners attaching splash shield to frame rail rearward of suspension.
(4) Install screws attaching wheelhouse splash shield to front fender.
(5) Install front wheel.
(6) Lower vehicle.

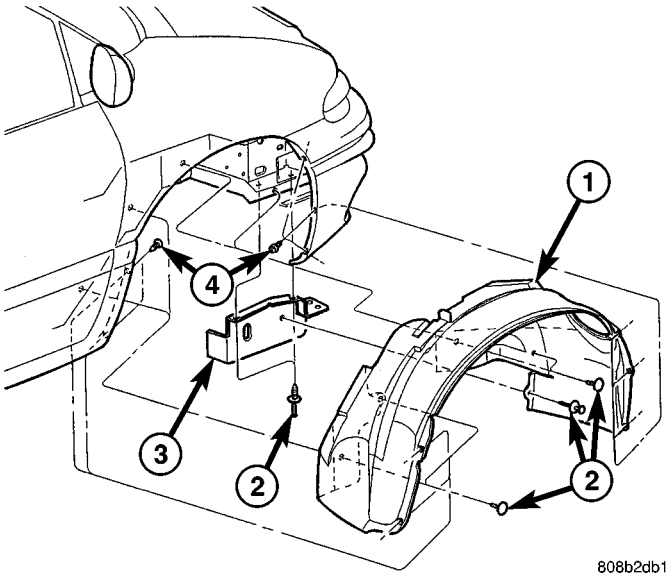

Fig. 17 FRONT WHEELHOUSE SPLASH SHIELD

1 - FRONT FENDER WHEELHOUSE SPLASH SHIELD
2 - PUSH PIN FASTENERS
3 - ACCESSORY DRIVE SPLASH SHIELD
4 - SCREWS

LUGGAGE RACK RISER

REMOVAL

(1) Remove two fasteners from the front riser. Gently pull up on the luggage rack side rail and detach the riser snap to remove riser from the rail (Fig. 18).
(2) Repeat for the opposite side, if necessary.
(3) Remove front riser(s) from vehicle (Fig. 19).

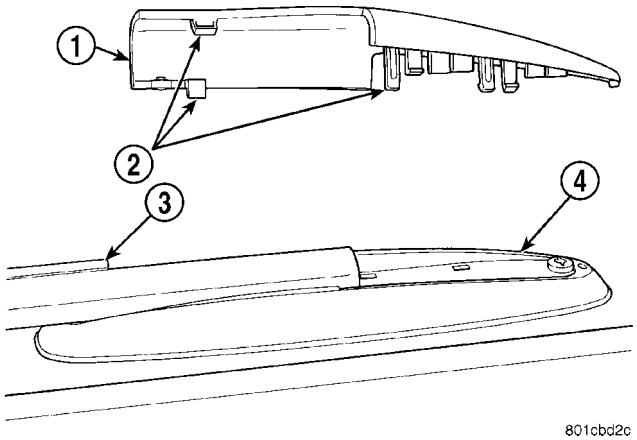

Fig. 18 LUGGAGE RACK RISER COVER

1 - FRONT RISER COVER
2 - LOCK TABS
3 - LUGGAGE RACK SIDE RAIL
4 - FRONT RISER

LUGGAGE RACK RISER (Continued)

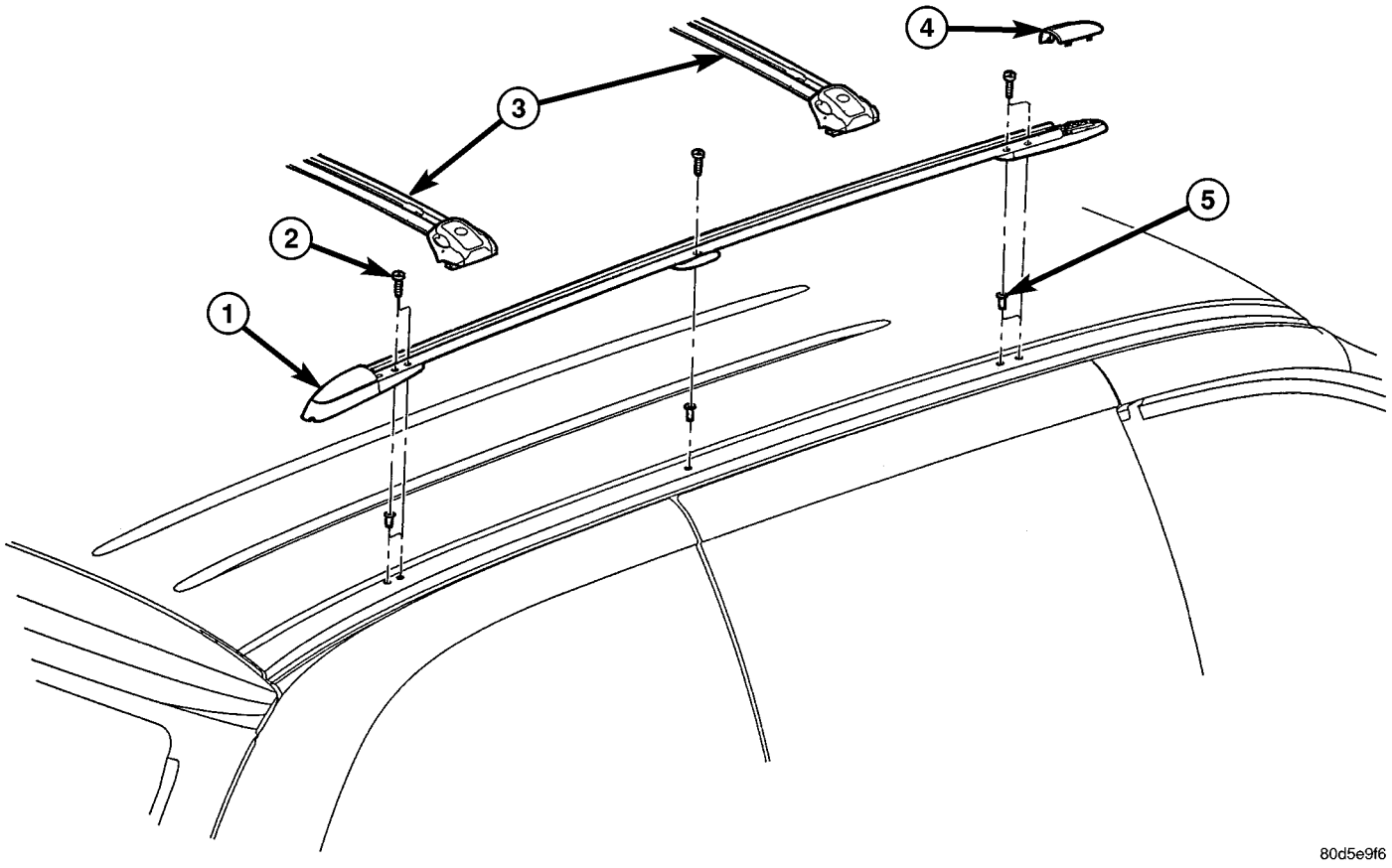

Fig. 19 LUGGAGE RACK, CROSSBARS AND RISER COVER

1 - LUGGAGE RACK SIDE RAILS
2 - SCREWS
3 - CROSSBARS
4 - FRONT RISER COVER
5 - RIV-NUTS

INSTALLATION

(1) Place front riser into position on luggage rack side rail.
(2) Install two fasteners into the riser.
(3) Repeat for the opposite side, if necessary.

LUGGAGE RACK CROSSBAR

REMOVAL

(1) Remove luggage rack front risers.
(2) Depress stanchion levers down until they click into the unlock position. (Fig. 20). Work from side to side sliding the crossbar assembly forward moving a little at a time to ensure it remains perpendicular to the side rails.
(3) Remove crossbar from vehicle.

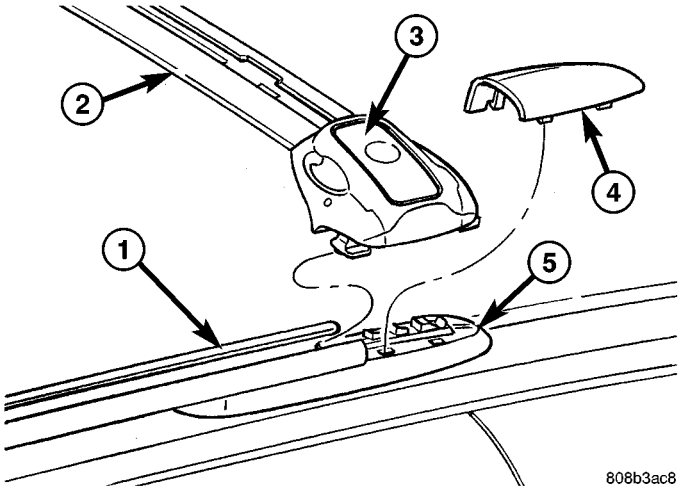

Fig. 20 LUGGAGE RACK CROSSBAR

1 - LUGGAGE RACK
2 - CROSSBAR
3 - SLIDE LOCK
4 - FRONT RISER COVER
5 - FRONT RISER

LUGGAGE RACK CROSSBAR (Continued)

INSTALLATION

NOTE: The crossbar assemblies are designed to be installed in only one way. Check top and bottom surfaces of the crossbar for the word FRONT and directional arrows. The directional arrows must point toward the front of the vehicle.

(1) Place crossbar in position on vehicle.
(2) Work from side to side sliding the crossbar assembly back a little at a time to ensure it remains perpendicular to the side rails.
(3) Position first crossbar assembly crossbar at the second most rearward locator holes. Press the top of the stanchion lever to lock it into position.
(4) Position the second crossbar assembly in the second hole from the front. Lock into place.
(5) Place luggage rack riser into position.
(6) Install two fasteners into riser. Tighten fasteners to 4 mm (35 in. lbs.) torque.

REAR QUARTER PANEL/ FENDER AIR EXHAUSTER

DESCRIPTION

Air exhausters, designed to conform to the body structure, allow air entering at the front of the vehicle to flow out the back. By reducing air pressure within the vehicle, the exhausters also reduce blower noise at any given air flow level compared to operating without them and help reduce door closing effort. They are located in the lower rear comers of the body.

REMOVAL

SHORT WHEELBASE

(1) Remove the rear fascia from the body. (Refer to 13 - FRAMES & BUMPERS/BUMPERS/REAR FASCIA - REMOVAL).
(2) Using a trim stick or another suitable wide flat bladed tool, carefully pry the air exhauster away from the opening in the lower aperture panel until the snap features release (Fig. 21).
(3) Remove the air exhauster from the hole in the lower aperture panel.

LONG WHEELBASE

NOTE: Models with the optional rear heater and air conditioner do not have an air exhauster on the right side of the vehicle, but have a plastic plug installed in the right lower aperture panel. This plug is removed using the same procedure used to remove the air exhauster from the short wheelbase model. Refer to SHORT WHEELBASE.

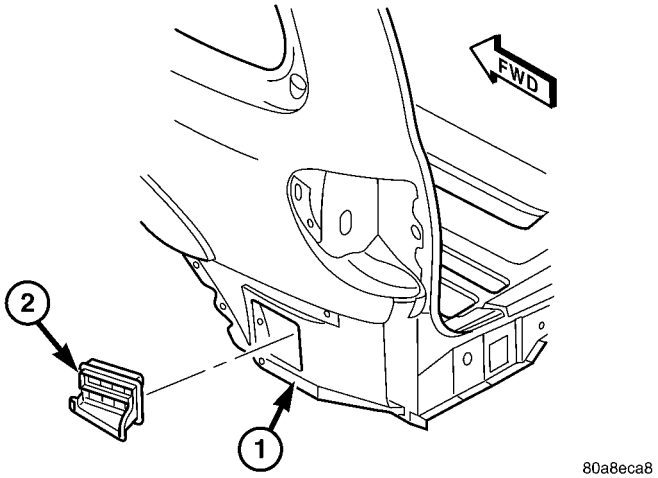

Fig. 21 AIR EXHAUSTER - SWB

1 - LOWER APERTURE PANEL
2 - AIR EXHAUSTER

(1) Remove the quarter trim panel from the inside of the left or right quarter inner panel (Refer to 23 - BODY/INTERIOR/RIGHT QUARTER TRIM PANEL - REMOVAL) or (Refer to 23 - BODY/INTERIOR/ LEFT QUARTER TRIM PANEL - REMOVAL).
(2) Using a trim stick or another suitable wide flat bladed tool, carefully pry the air exhauster away from the opening in the lower aperture panel until the snap features release (Fig. 22).

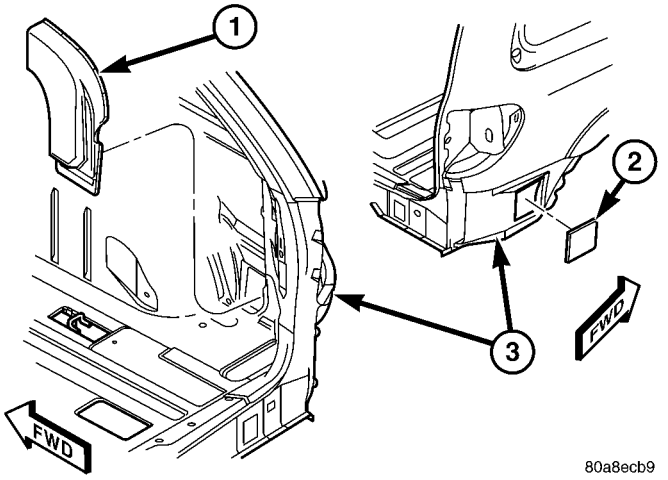

Fig. 22 AIR EXHAUSTER - LWB

1 - AIR EXHAUSTER
2 - PLUG
3 - LOWER APERTURE PANEL

(1) Remove the air exhauster from the hole in the lower aperture panel.

INSTALLATION

SHORT WHEELBASE

(1) Position the air exhauster to the hole in the lower aperture panel (Fig. 21).

(2) Using hand pressure, press the air exhauster into the opening in the lower aperture panel until the snap features are fully engaged.

(3) Reinstall the rear fascia onto the body. (Refer to 13 - FRAMES & BUMPERS/BUMPERS/REAR FASCIA - INSTALLATION).

LONG WHEELBASE

NOTE: Models with the optional rear heater and air conditioner do not have an air exhauster on the right side of the vehicle, but have a plastic plug installed in the right lower aperture panel. This plug is installed using the same procedure used to install the air exhauster onto the short wheelbase model. Refer to SHORT WHEELBASE.

(1) Position the air exhauster to the hole in the lower aperture panel (Fig. 22).

(2) Using hand pressure, press the air exhauster into the opening in the lower aperture panel until the snap features are fully engaged.

(3) Reinstall the quarter trim panel onto the inside of the left or right quarter inner panel. (Refer to 23 - BODY/INTERIOR/RIGHT QUARTER TRIM PANEL - INSTALLATION) or (Refer to 23 - BODY/INTERIOR/LEFT QUARTER TRIM PANEL - INSTALLATION).

ROOF JOINT MOLDING

REMOVAL

The RAP molding is set with body side molding tape. The temperature in the work area and the vehicle should be at least 21° C (70° F) to avoid damaging the RAP moldings.

(1) Warm the affected stick-on molding and body metal to approximately 38° C (100° F) using a suitable heat lamp or heat gun.

(2) Pull stick-on molding from painted surface.

(3) Remove adhesive tape residue from painted surface of vehicle. Use a 3M Scotch-Brite™ Molding Adhesive and Stripe Removal Discs, or equivalent, to clean adhesive residue from painted surfaces. The adhesive removal discs are available from automotive paint suppliers. Refer to instructions supplied with the discs for proper usage.

INSTALLATION

The RAP molding is set with body side molding tape. The temperature in the work area and the vehicle should be at least 21° C (70° F) to avoid damaging the RAP moldings.

(1) If molding is to be reused;

(a) Remove tape residue from molding.

(b) Clean back of molding with Mopar® Super Kleen solvent, or equivalent.

(c) Wipe molding dry with lint free cloth.

(d) Apply new body side molding (two sided adhesive) tape to back of molding.

(2) Clean body surface with Mopar® Super Kleen solvent, or equivalent. Wipe surface dry with lint free cloth.

(3) Remove protective cover from tape on back of molding.

(4) Apply molding to body from front of vehicle to rear.

(5) Using a roller tool, roll molding onto body panel with enough force to assure adhesion and not bend roof panels.

SIDE VIEW MIRROR

REMOVAL

(1) Using a trim stick C-4755 or equivalent, lift up the end of the instrument panel top pad enough to gain access to the mirror electrical connector, if equipped. (Refer to 23 - BODY/INSTRUMENT PANEL/INSTRUMENT PANEL TOP COVER - REMOVAL)

(2) Disconnect the electrical connector, if equipped.

(3) Using a trim stick or equivalent, remove the trim cover (Fig. 23).

(4) Remove the bolts.

(5) Remove the mirror from the pillar.

INSTALLATION

(1) Route the mirror wire harness, if equipped, through the a-pillar and place side view mirror in position on vehicle (Fig. 23).

(2) Install the bolts and tighten to 10 N·m (85 in. lbs.).

(3) Install the mirror trim cover.

(4) Connect the electrical connector, if equipped.

(5) Install the instrument panel top cover, if equipped with the electric mirror. (Refer to 23 - BODY/INSTRUMENT PANEL/INSTRUMENT PANEL TOP COVER - INSTALLATION)

SIDE VIEW MIRROR (Continued)

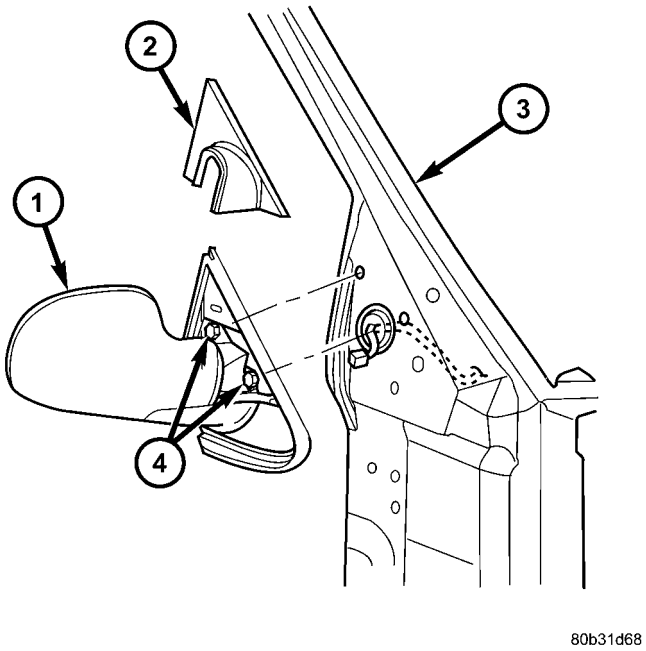

Fig. 23 SIDE VIEW MIRROR

1 - MIRROR
2 - MIRROR TRIM COVER
3 - A-PILLAR
4 - BOLTS

GLASS-OUTSIDE REARVIEW MIRROR

REMOVAL

WARNING: ALWAYS WEAR EYE AND HAND PROTECTION WHEN SERVICING THE MIRROR ASSEMBLY. FAILURE TO OBSERVE THESE WARNINGS MAY RESULT IN PERSONAL INJURY FROM BROKEN GLASS.

(1) Carefully pull/pry the broken glass holder from the mirror assembly.

(2) Disconnect the heated mirror electrical connectors from the terminals on the mirror glass holder, if equipped.

INSTALLATION

CAUTION: It is important to make sure the motor is square to the glass holder (attaching fingers) prior to glass holder attachment, otherwise the glass holder could be installed incorrectly causing poor retention and possible repeat failure.

(1) Position the new mirror glass holder to the mirror assembly.

NOTE: Position the mirror glass holder so that the moisture drain hole on the mirror glass holder assembly is facing downward.

(2) Align the mirror glass holder's attaching fingers to the mirror motor housing.

NOTE: Ensure that the protective rubber cover of the mirror motor housing is positioned correctly around the bottom of the fingers area.

(3) Using one hand, firmly press the mirror glass holder assembly into place while at the same time supporting the housing assembly from the backside with the other hand.

NOTE: Pressure must be applied equally over the center portion of the mirror to engage the mirror glass holder's attaching fingers to the corresponding fingers on the housing assembly. One or more clicks may be heard when finger engagement takes place.

(4) Verify retention of the mirror glass holder assembly by gently pulling outward on the mirror glass holder.

HOOD

TABLE OF CONTENTS

page

HINGE
REMOVAL 62
INSTALLATION 62
HOOD
REMOVAL 62
INSTALLATION 63
LATCH
REMOVAL 63
INSTALLATION 63
LATCH RELEASE CABLE
REMOVAL 63
INSTALLATION 64
LATCH STRIKER
REMOVAL 64
INSTALLATION 64

HINGE

REMOVAL

(1) Remove Front Wiper Unit (Refer to 8 - ELECTRICAL/WIPERS/WASHERS/WIPER MODULE - REMOVAL) for procedure.

(2) Raise hood.

(3) Mark all bolt and hinge attachment locations with a grease pencil or other suitable device to provide reference marks for installation.

(4) Remove pivot bolt from the body half of hood hinge and use suitable device to support the hood.

(5) Remove bolts attaching body half of hood hinge to front fender flange and remove hinge from vehicle (Fig. 1).

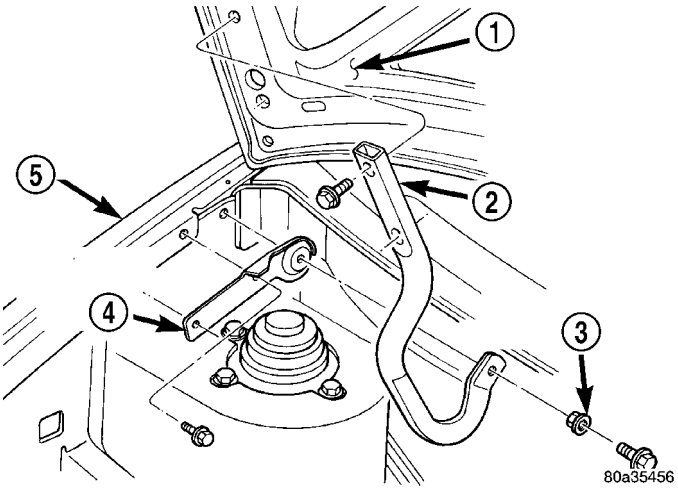

Fig. 1 HOOD HINGE

1 - HOOD
2 - HOOD HALF OF HOOD HINGE
3 - HOOD HINGE PIVOT BUSHING
4 - BODY HALF OF HOOD HINGE
5 - FENDER

INSTALLATION

(1) If necessary, paint new hinge before installation.

(2) Place body half of hood hinge in position on vehicle.

(3) Install bolts attaching hood hinge to front fender flange. Tighten bolts to 8 N·m (70 in. lbs.) torque.

(4) Install pivot bolt to the body half of hood hinge. Tighten bolts to 28 N·m (21 ft. lbs.) torque.

(5) Install Front Wiper Unit (Refer to 8 - ELECTRICAL/WIPERS/WASHERS/WIPER MODULE - INSTALLATION) for proper procedures.

(6) Align all marks and secure bolts. The hood should be aligned to 4 mm (0.160 in.) gap to the front fenders and flush across the top surfaces along fenders. Shims can be added or removed under hood hinge to achieve proper hood height. Tighten bolts to 13.5 N·m (10 ft. lbs.) torque.Close hood.

HOOD

REMOVAL

(1) Raise hood to full up position.

(2) Mark all bolt and hinge attachment locations with a grease pencil or other suitable device to provide reference marks for installation.

(3) Remove the top bolts attaching hood to hinge and loosen the bottom bolts until they can be removed by hand (Fig. 2).

(4) With assistance from a helper at the opposite side of the vehicle to support the hood, remove bottom bolts attaching hood to hinge.

(5) Remove the hood from the vehicle.

HOOD (Continued)

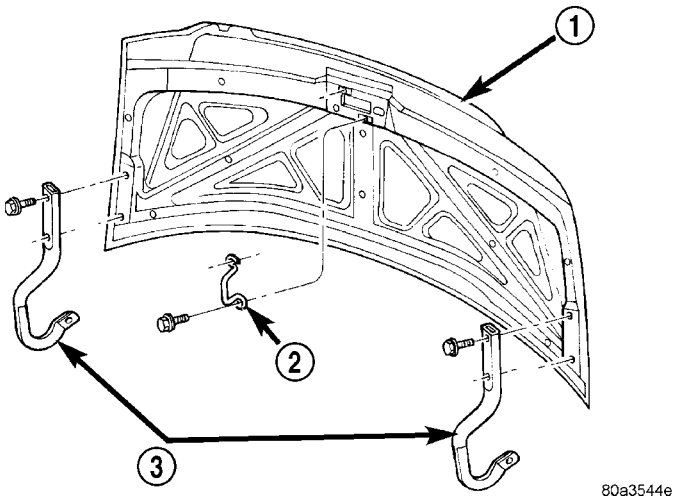

Fig. 2 HOOD

1 - HOOD
2 - HOOD LATCH STRIKER
3 - HOOD HALF OF HOOD HINGE

INSTALLATION

(1) Place hood in position on vehicle. With assistance from a helper at the opposite side of the vehicle to support the hood, install bottom bolts attaching hood to hinge finger tight.

(2) Install top bolts attaching hood to hinge finger tight.

(3) Position bolts at marks and tighten. Tighten bolts to 13.5 N·m (120 in. lbs.) torque. The hood should be aligned to 4 mm (0.160 in.) gap to the front fenders and flush across the top surfaces along fenders.

(4) Verify hood operation and alignment.

LATCH

REMOVAL

(1) Release hood latch and open hood.

(2) Remove bolts attaching hood latch to radiator closure panel crossmember (Fig. 3).

(3) Remove hood latch from crossmember.

(4) Disconnect hood release cable from hood latch (Fig. 4).

(5) Remove hood latch from vehicle.

INSTALLATION

(1) Position hood latch on vehicle.

(2) Connect hood release cable from hood latch.

(3) Position hood latch on crossmember.

(4) Align hood latch by placing latch over net pierced tabs. If alignment is required, flatten or grind tabs.

(5) Verify hood operation and alignment. Adjust as necessary.

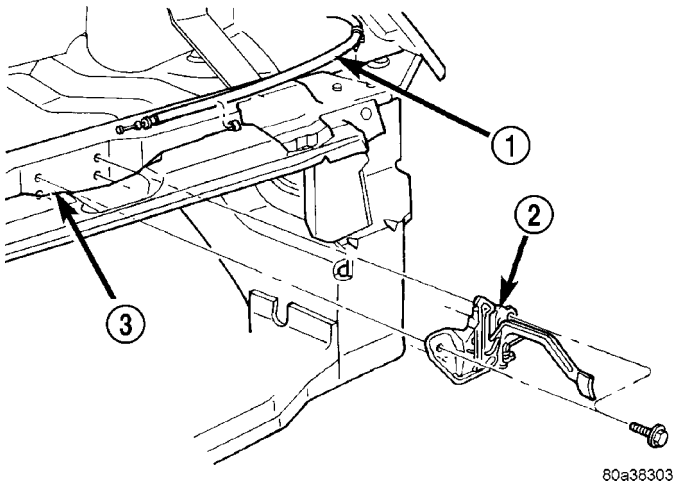

Fig. 3 HOOD LATCH

1 - HOOD RELEASE CABLE
2 - HOOD LATCH
3 - RADIATOR CLOSURE PANEL CROSSMEMBER

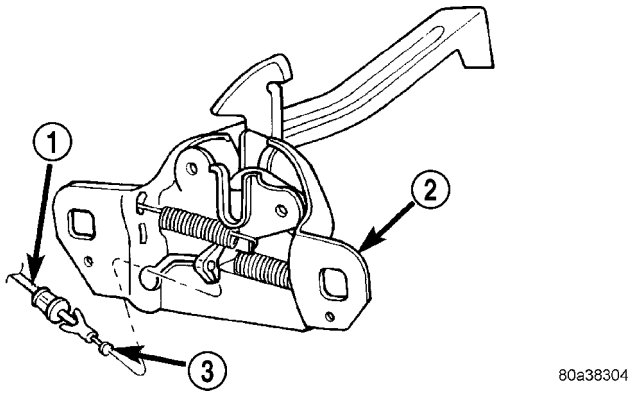

Fig. 4 HOOD

1 - RELEASE CABLE CASE
2 - HOOD LATCH
3 - RELEASE CABLE END

(6) Tighten attaching bolts to 13.5 N·m (10 ft. lbs.) torque.

LATCH RELEASE CABLE

REMOVAL

(1) Remove hood latch.

(2) Disengage cable end from hood latch locking mechanism.

(3) Slide cable case end sideways in keyhole slot of hood latch while pinching barb on cable case closed.

(4) Remove cable from latch (Fig. 4).

(5) Remove hood release handle from instrument panel.

(6) Disengage rubber grommet cable insulator from hole in dash panel.

(7) Attach a suitable length of mechanic's wire to latch end of cable to assist cable installation.

LATCH RELEASE CABLE (Continued)

(8) Route cable back from latch through engine compartment toward dash panel near power brake booster (Fig. 5).

(9) Remove attaching clips from cable case.

(10) From inside vehicle, pull cable through dash panel until mechanic's wire is exposed.

(11) Disconnect cable from mechanic's wire.

(12) Remove hood release cable from vehicle.

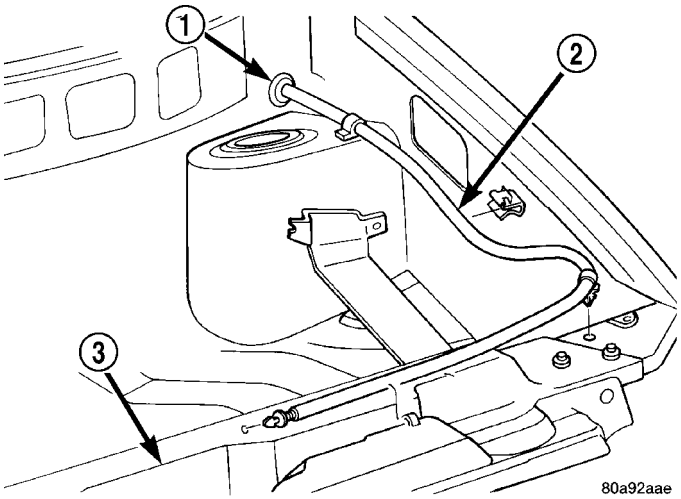

Fig. 5 HOOD RELEASE CABLE ROUTING

1 - GROMMET
2 - HOOD RELEASE CABLE
3 - RADIATOR CLOSURE PANEL CROSSMEMBER

INSTALLATION

(1) Place hood release cable in position under instrument panel.

(2) Attach latch end of hood release cable to mechanic's wire protruding through dash panel.

(3) Route cable forward through engine compartment toward latch by pulling on mechanic's wire (Fig. 5).

(4) Disconnect mechanic's wire from cable.

(5) Engage rubber grommet cable insulator into hole in dash panel.

(6) Install hood release handle into instrument panel.

(7) Place cable in position on latch.

(8) Slide cable case end sideways into keyhole slot of hood latch.

(9) Engage cable end into hood latch locking mechanism.

(10) Install hood latch.

(11) Install attaching clips to cable case and install clips into original holes in strut tower, fender, headlamp area, and radiator closure panel crossmember.

LATCH STRIKER

REMOVAL

(1) Release hood latch and open hood.

(2) Remove bolts attaching striker to inside of hood.

(3) Remove hood latch striker from vehicle.

INSTALLATION

(1) Position hood latch striker on vehicle, aligning with paint breaks.

(2) Install bolts attaching hood latch striker to hood.

(3) Align hood latch striker to engage smoothly into hood latch.

(4) Verify hood operation and alignment. Adjust as necessary.

(5) Tighten attaching bolts to 13.5 N·m (10 ft. lbs.) torque.

INSTRUMENT PANEL

TABLE OF CONTENTS

page

CLUSTER BEZEL
REMOVAL 65
INSTALLATION 65
CUP HOLDER
REMOVAL 65
INSTALLATION 65
GLOVE BOX
REMOVAL 66
INSTALLATION 66
GLOVE BOX LATCH
REMOVAL 66
INSTALLATION 66
GLOVE BOX LATCH STRIKER
REMOVAL 66
INSTALLATION 66
INSTRUMENT PANEL ASSEMBLY
REMOVAL 67
INSTALLATION 70
INSTRUMENT PANEL CENTER BEZEL
REMOVAL 71
INSTALLATION 72
INSTRUMENT PANEL RIGHT END CAP
REMOVAL 72

page

INSTALLATION 72
INSTRUMENT PANEL TOP COVER
REMOVAL 72
INSTALLATION 72
LOWER CONSOLE
REMOVAL 73
INSTALLATION 73
LOWER INSTRUMENT PANEL
REMOVAL 73
INSTALLATION 73
LOWER STEERING COLUMN COVER
REMOVAL 74
INSTALLATION 74
BLOCKER- INFLATABLE KNEE
REMOVAL 75
INSTALLATION 75
OVER STEERING COLUMN COVER
REMOVAL 76
INSTALLATION 76
INSTRUMENT PANEL TOP PAD ASSEMBLY
REMOVAL 77
INSTALLATION 77

CLUSTER BEZEL

REMOVAL

(1) Disconnect and isolate the battery negative cable.

(2) Remove Over Steering Column Bezel by lifting it straight up with a firm pull.

(3) Remove the four bezel attaching screws (Fig. 1).

(4) Tilt the steering column in the full down position.

(5) Pull rearward on the cluster bezel and remove.

INSTALLATION

(1) Maneuver cluster bezel over steering column and into position (Fig. 1).

(2) Install the four bezel attaching screws.

(3) Install the Over Steering Column Bezel by positioning it over the retaining slots and firmly snapping it into place.

(4) Connect the battery negative cable.

CUP HOLDER

REMOVAL

(1) Remove the screw access cover from the bottom of the center bezel.

(2) Remove the center bezel attaching screws.

(3) Using a trim stick (special tool # C-4755) or equivalent, gently pry out on the edge of the instrument panel center bezel. Hang off to the side leaving the accessory switches connected.

(4) Pull the cup holder assembly rearward to disengage the rear guide studs from instrument panel (Fig. 2).

(5) Remove the cup holder assembly from lower instrument panel.

INSTALLATION

(1) Ensure the cup holder assembly is in the closed position. The cup holder assembly must be installed as an assembly to ensure proper track position.

(2) Place the cup holder assembly into position in the lower instrument panel and slide into opening until the rear guide struts snap into place (Fig. 2).

(3) Install the center bezel.

CUP HOLDER (Continued)

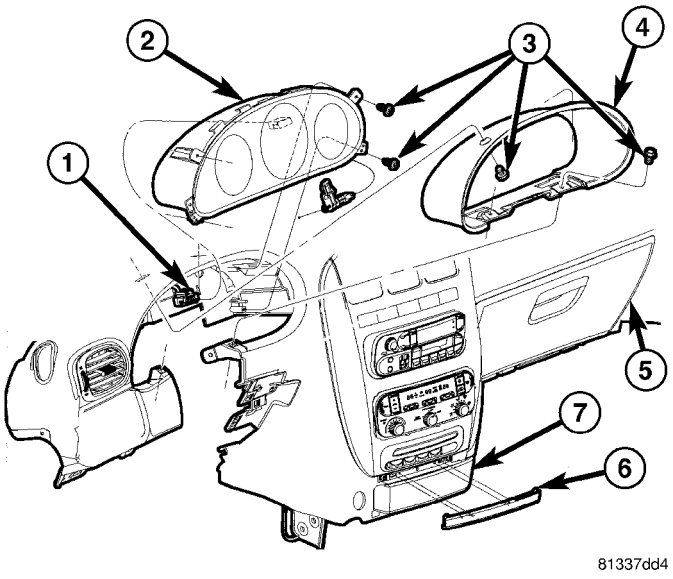

Fig. 1 INSTRUMENT PANEL CLUSTER BEZEL

1 - WIRE CONNECTOR
2 - SPEEDOMETER
3 - ATTACHING SCREW(S)
4 - INSTRUMENT PANEL CLUSTER BEZEL
5 - INSTRUMENT PANEL
6 - CENTER STACK FILLER BEZEL
7 - CUP HOLDER AND TRAY

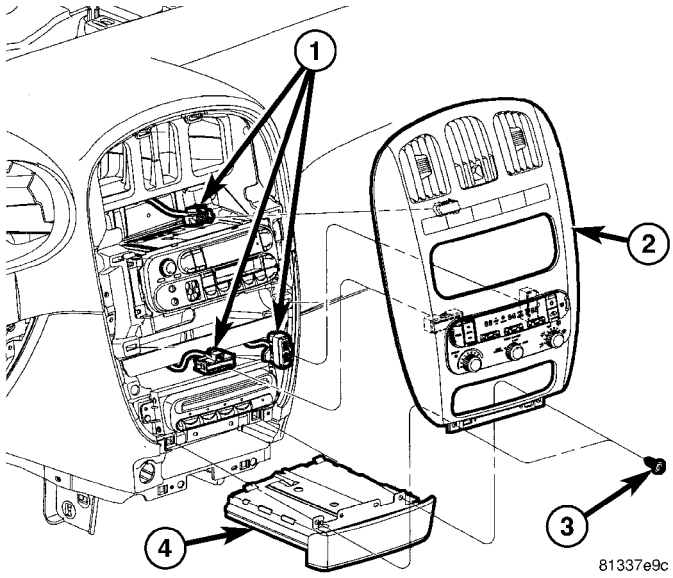

Fig. 2 TRAY CUP HOLDER

1 - WIRE CONNECTOR
2 - CENTER SWITCH AND BEZEL ASSEMBLY
3 - ATTACHING SCREW(S)
4 - TRAY AND CUP HOLDER

(4) Install the center bezel attaching screws

(5) Install the screw access cover to the bottom of the center bezel.

GLOVE BOX

REMOVAL

(1) Open glove box.

(2) Push in on sides of glove box bin and lower door.

(3) Pivot glove box downward and disengage hinge hooks from instrument panel.

(4) Remove glove box.

INSTALLATION

(1) Place glove box in position.

(2) Engage hinge hooks into instrument panel and pivot glove box upward.

(3) Push in sides of glove box bin and snap glove box assembly into instrument panel.

(4) Close glove box door.

GLOVE BOX LATCH

REMOVAL

(1) Open glove box.

(2) Push in on sides of glove box bin and lower door.

(3) Pivot glove box downward and disengage hinge hooks from instrument panel.

(4) Remove glove box.

(5) Remove the assembly screws.

(6) Disassemble the glove box.

(7) Separate the latch from the glove box assembly.

INSTALLATION

(1) Install the latch onto the glove box assembly.

(2) Assemble the glove box.

(3) Install the assembly screws.

(4) Engage hinge hooks into instrument panel and pivot glove box upward.

(5) Push in sides of glove box bin and snap glove box assembly into instrument panel.

(6) Close glove box door.

GLOVE BOX LATCH STRIKER

REMOVAL

(1) Open glove box door.

(2) Remove screws holding lock striker to instrument panel.

(3) Remove glove box latch striker.

INSTALLATION

(1) Install the glove box latch striker.

(2) Install the screws holding latch striker to instrument panel.

(3) Close glove box door.

INSTRUMENT PANEL ASSEMBLY

REMOVAL

WARNING: TO AVOID PERSONAL INJURY OR DEATH, ON VEHICLES EQUIPPED WITH AIRBAGS, DISABLE THE SUPPLEMENTAL RESTRAINT SYSTEM BEFORE ATTEMPTING ANY STEERING WHEEL, STEERING COLUMN, AIRBAG, OCCUPANT CLASSIFICATION SYSTEM, SEAT BELT TENSIONER, IMPACT SENSOR, OR INSTRUMENT PANEL COMPONENT DIAGNOSIS OR SERVICE. DISCONNECT AND ISOLATE THE BATTERY NEGATIVE (GROUND) CABLE, THEN WAIT TWO MINUTES FOR THE SYSTEM CAPACITOR TO DISCHARGE BEFORE PERFORMING FURTHER DIAGNOSIS OR SERVICE. THIS IS THE ONLY SURE WAY TO DISABLE THE SUPPLEMENTAL RESTRAINT SYSTEM. FAILURE TO TAKE THE PROPER PRECAUTIONS COULD RESULT IN ACCIDENTAL AIRBAG DEPLOYMENT.

WARNING: TO AVOID PERSONAL INJURY OR DEATH ON VEHICLES EQUIPPED WITH THE OCCUPANT CLASSIFICATION SYSTEM (OCS), ONLY THE OCCUPANT CLASSIFICATION MODULE (OCM) AND THE SEAT CUSHION TRIM MAY BE SERVICED SEPARATELY. ALL OTHER COMPONENTS OF THE PASSENGER SIDE FRONT SEAT CUSHION ASSEMBLY MUST BE SERVICED ONLY AS A COMPLETE FACTORY-CALIBRATED, ASSEMBLED AND TAMPER-EVIDENT SERVICE REPLACEMENT PACKAGE. THIS PACKAGE INCLUDES THE FRAME, SPRINGS, PAD, BLADDER, SENSOR, FOAM, WIRING AND A CALIBRATED OCM. WHEN INSTALLING THIS PACKAGE ALWAYS REPLACE ALL OF THE EXISTING COMPONENTS WITH THE NEW COMPONENTS AS A UNIT. DO NOT ATTEMPT TO SEPARATE OR DISCONNECT ANY OF THE NEW OCS COMPONENTS IN THE SERVICE REPLACEMENT PACKAGE FROM EACH OTHER, AND DO NOT ATTEMPT TO REUSE ANY OF THE REPLACED COMPONENTS IN THIS OR ANY OTHER VEHICLE. FAILURE TO TAKE THE PROPER PRECAUTIONS COULD RESULT IN FAILURE OF THE PASSENGER AIRBAG TO DEPLOY WHEN REQUIRED, OR IN PASSENGER AIRBAG DEPLOYMENT WHEN NOT REQUIRED.

(1) Disconnect and isolate the battery negative cable.

(2) Remove the lower console:

(a) Remove five retaining screws.

(b) Pull rearward and disconnect the auxiliary power outlet.

(c) Remove lower console from vehicle.

(3) Remove the bolts attaching the lower supports to the instrument panel frame (Fig. 3).

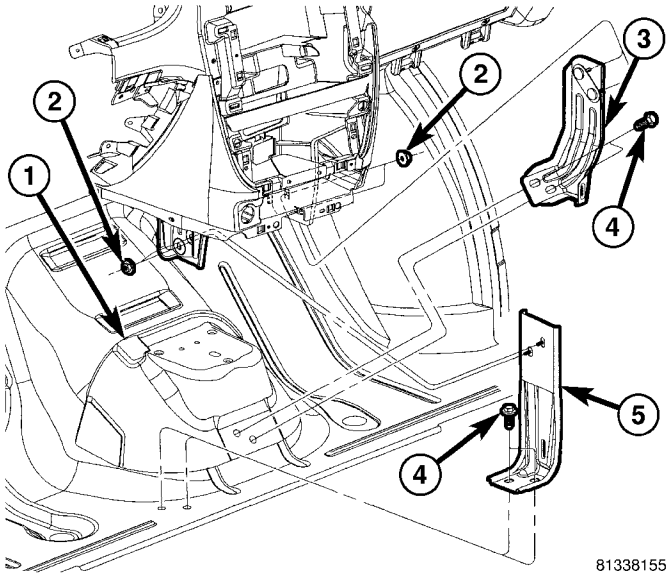

Fig. 3 FLOOR TO CENTER STACK BRACKETS

1 - DASH PANEL OCCUPANT BRACKET
2 - FLOOR BRACKET NUT
3 - FLOOR TO CENTER STACK BRACKET (RIGHT)
4 - BRACKET ATTACHING SCREW(S)
5 - FLOOR TO CENTER STACK BRACKET (LEFT)

(4) Remove the bolts attaching the lower supports to the floor pan.

(5) Remove the both left and right side A-pillar trim covers using a trim stick (special tool #C-4755) or equivalent gently pry out on the trim covers and remove.

(6) Remove the instrument panel top cover. (Refer to 23 - BODY/INSTRUMENT PANEL/INSTRUMENT PANEL TOP PAD - REMOVAL).

(7) Disconnect the wire connectors from the Passenger Airbag.

(8) Remove the two screws to each right and left cowl trim covers.

(9) Remove screws attaching instrument panel frame to the dash panel below windshield opening (Fig. 4).

(10) Remove the glove box:

(a) Push in on sides of glove box bin and lower door.

(b) Pivot glove box downward and disengage hinge hooks from instrument panel.

(c) Remove glove box from vehicle.

(11) Disconnect the antenna lead connector from behind the glove box.

(12) Disconnect the right side wire connectors from the HVAC behind the glove box area and the two antenna connectors behind the glove box hinge.

INSTRUMENT PANEL ASSEMBLY (Continued)

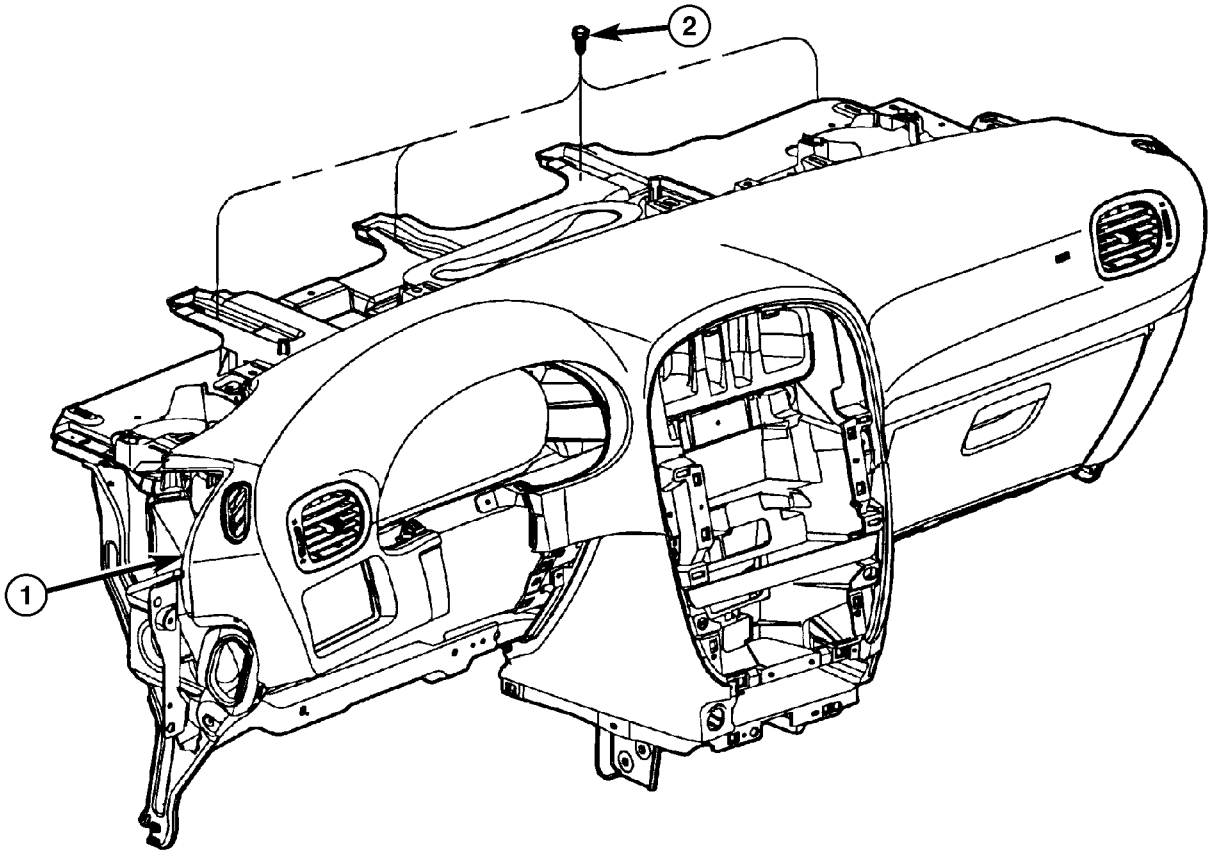

Fig. 4 INSTRUMENT PANEL REMOVAL

1 - INSTRUMENT PANEL
2 - SIX ATTACHING SCREWS
3 - 13 mm BOLT - TWO ON EACH SIDE
4 - ROLL DOWN BRACKET
5 - 10 mm BOLT - STARTING BOLT ONE EACH SIDE

(13) Remove the right end cover by pulling outboard.

(14) Remove the right side A-pillar retaining bolts (Fig. 5). There are two 13 mm bolts and one 10 mm bolt.

(15) Loosen the right side cowl side roll down bolt.

(16) Remove over steering column cover. (Refer to 23 - BODY/INSTRUMENT PANEL/STEERING COLUMN OPENING COVER - REMOVAL).

(17) Remove the cluster bezel. (Refer to 23 - BODY/INSTRUMENT PANEL/CLUSTER BEZEL - REMOVAL).

(18) Remove the lower steering column cover and end cap. (Refer to 23 - BODY/INSTRUMENT PANEL/LOWER STEERING COLUMN COVER - REMOVAL)

(19) Remove the inflatable knee blocker. (Refer to 23 - BODY/INSTRUMENT PANEL/INFLATABLE KNEE BLOCKER - REMOVAL)

(20) Remove the two screws to the hood release handle.

(21) Remove the two steering column fixed shroud retaining screws (Fig. 6).

(22) Remove the four steering column shroud retaining screws. Separate the steering column bearing shroud and steering column shroud and remove from vehicle (Fig. 6).

(23) Disconnect the left side wiring:

(a) Brake switch.
(b) Main bulkhead connector.
(c) Five harness connectors.
(d) Driver airbag connector.

(24) Disconnect the steering column wiring. There are seven connectors and then unclip the harness from the column.

(25) Disconnect the Occupant Restraint Controller (ORC) harness connector.

INSTRUMENT PANEL ASSEMBLY (Continued)

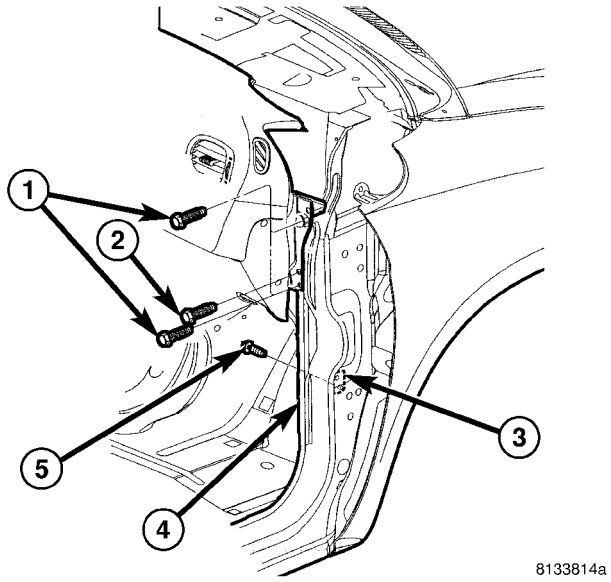

Fig. 5 RIGHT SIDE INSTRUMENT PANEL ATTACHING SCREWS

1 - INSTRUMENT PANEL ATTACHING SCREWS
2 - INSTRUMENT PANEL TO COWL SIDE LOCATOR SCREW
3 - COWL SIDE COWL REINFORCEMENT
4 - COWL PANEL
5 - INSTRUMENT PANEL COWL SIDE ROLL DOWN BOLT

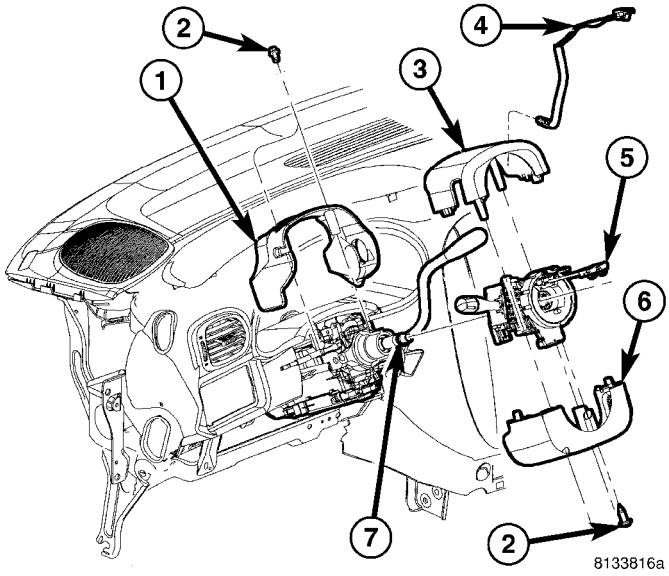

Fig. 6 STEERING COLUMN SHROUDS

1 - FIXED SHROUD
2 - ATTACHING SCREW(S)
3 - STEERING COLUMN BEARING SHROUD
4 - TRACTION CONTROL DISABLE SWITCH
5 - MULTI-FUNCTION SWITCH AND CLOCKSPRING HOUSING
6 - STEERING COLUMN SHROUD
7 - STEERING COLUMN

(26) Remove the three nuts retaining the steering column to the dash panel steering column mounting bracket and lower column to the floor (Fig. 7).

(27) Remove the three nuts attaching the instrument panel to the brake pedal support bracket.

(28) Remove six instrument panel steering column cover plate attaching screws and remove cover plate (Fig. 8).Remove the screws attaching the instrument panel reinforcement and remove (Fig. 9).

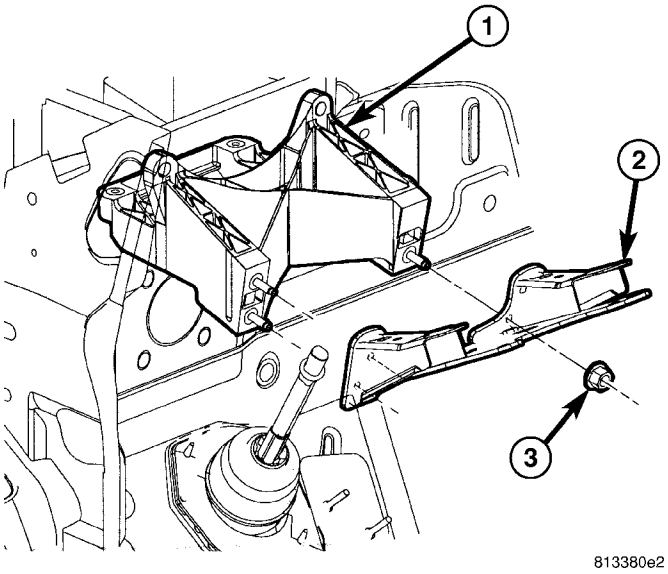

Fig. 7 STEERING COLUMN MOUNTING BRACKET

1 - DASH PANEL STEERING COLUMN MOUNTING BRACKET
2 - INSTRUMENT PANEL STEERING COLUMN BRACKET
3 - ATTACHING NUT(S)

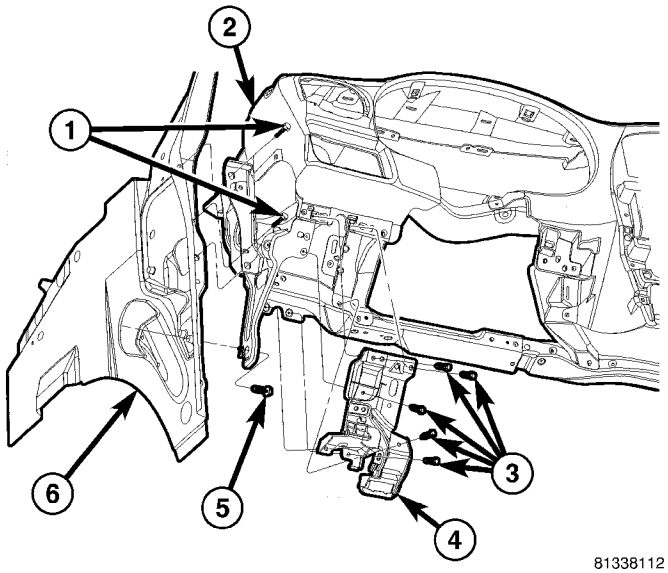

Fig. 8 LEFT SIDE I/P ATTACHING SCREWS

1 - INSTRUMENT PANEL ATTACHING SCREWS
2 - INSTRUMENT PANEL
3 - COLUMN COVER PLATE ATTACHING SCREWS
4 - INSTRUMENT PANEL COLUMN COVER PLATE
5 - INSTRUMENT PANEL COWL SIDE ROLL DOWN SCREW
6 - COWL PANEL

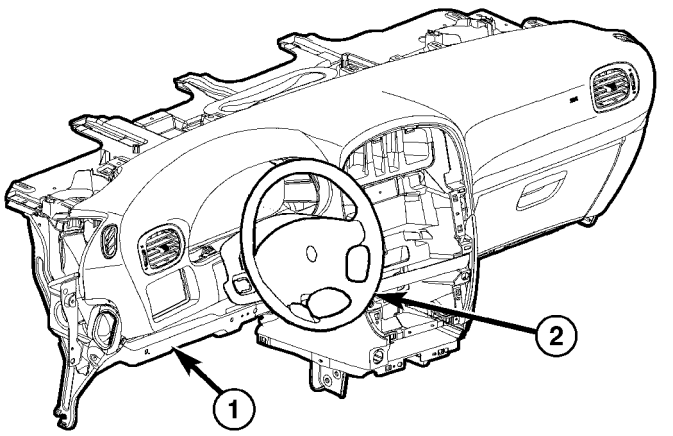

Fig. 9 INSTRUMENT PANEL LOWER REINFORCEMENT

1 - LOWER RIGHT REINFORCEMENT
2 - STEERING WHEEL ASSEMBLY

(29) Remove both the left and right power mirrors:
(a) Using a trim stick or equivalent, gently pry out on mirror trim cover.
(b) Open door and remove the three torx retaining screws.
(c) Disconnect the wire connector and remove mirror from the vehicle.

(30) Feed power mirror wire harness inboard through the A-pillar.

(31) Loosen the left side roll down bolt (Fig. 8).

(32) Remove the left side A-pillar retaining bolts. There are two 13 mm bolts and one 10 mm bolt (Fig. 8).

(33) With the help of an assistant remove the instrument panel from vehicle. Lift the instrument panel up off the HVAC so you won't damage the sealing surface of the distribution duct.

(34) If the instrument panel is being replaced, transfer all parts to the new instrument panel assembly.

INSTALLATION

WARNING: TO AVOID PERSONAL INJURY OR DEATH, ON VEHICLES EQUIPPED WITH AIRBAGS, DISABLE THE SUPPLEMENTAL RESTRAINT SYSTEM BEFORE ATTEMPTING ANY STEERING WHEEL, STEERING COLUMN, AIRBAG, OCCUPANT CLASSIFICATION SYSTEM, SEAT BELT TENSIONER, IMPACT SENSOR, OR INSTRUMENT PANEL COMPONENT DIAGNOSIS OR SERVICE. DISCONNECT AND ISOLATE THE BATTERY NEGATIVE (GROUND) CABLE, THEN WAIT TWO MINUTES FOR THE SYSTEM CAPACITOR TO DISCHARGE BEFORE PERFORMING FURTHER DIAGNOSIS OR SERVICE. THIS IS THE ONLY SURE WAY TO DISABLE THE SUPPLEMENTAL RESTRAINT SYSTEM. FAILURE TO TAKE THE PROPER PRECAUTIONS COULD RESULT IN ACCIDENTAL AIRBAG DEPLOYMENT.

WARNING: TO AVOID PERSONAL INJURY OR DEATH ON VEHICLES EQUIPPED WITH THE OCCUPANT CLASSIFICATION SYSTEM (OCS), ONLY THE OCCUPANT CLASSIFICATION MODULE (OCM) AND THE SEAT CUSHION TRIM MAY BE SERVICED SEPARATELY. ALL OTHER COMPONENTS OF THE PASSENGER SIDE FRONT SEAT CUSHION ASSEMBLY MUST BE SERVICED ONLY AS A COMPLETE FACTORY-CALIBRATED, ASSEMBLED AND TAMPER-EVIDENT SERVICE REPLACEMENT PACKAGE. THIS PACKAGE INCLUDES THE FRAME, SPRINGS, PAD, BLADDER, SENSOR, FOAM, WIRING AND A CALIBRATED OCM. WHEN INSTALLING THIS PACKAGE ALWAYS REPLACE ALL OF THE EXISTING COMPONENTS WITH THE NEW COMPONENTS AS A UNIT. DO NOT ATTEMPT TO SEPARATE OR DISCONNECT ANY OF THE NEW OCS COMPONENTS IN THE SERVICE REPLACEMENT PACKAGE FROM EACH OTHER, AND DO NOT ATTEMPT TO REUSE ANY OF THE REPLACED COMPONENTS IN THIS OR ANY OTHER VEHICLE. FAILURE TO TAKE THE PROPER PRECAUTIONS COULD RESULT IN FAILURE OF THE PASSENGER AIRBAG TO DEPLOY WHEN REQUIRED, OR IN PASSENGER AIRBAG DEPLOYMENT WHEN NOT REQUIRED.

(1) With the help of an assistant place the instrument panel into vehicle on roll down bolts. As you roll the instrument panel up, lift the instrument panel up so the duct work does not bind or bend and you can set it down on the HVAC housing to get the proper seal at the distribution duct. Get one bolt started in the dash panel.

(2) Start the locator screw and install the right side A-pillar retaining bolts (Fig. 5). There are two 13 mm bolts and one 10 mm bolt.

(3) Install the left side A-pillar retaining bolts. There are two 13 mm bolts and one 10 mm bolt (Fig. 8).

(4) Tighten the right and left side cowl side roll down bolt.

(5) Feed power mirror wire harness outboard through the A-pillar.

(6) Install both the left and right power mirrors:
(a) Connect the wire connector and install the mirror onto the vehicle.
(b) Install the three torx retaining screws.
(c) Using a firm push, snap the mirror trim cover into place.

(7) Place steering column cover plate into position (Fig. 8).

(8) Install six instrument panel steering column cover plate attaching screws.

(9) Install the screws attaching the instrument panel reinforcement (Fig. 9).

(10) Place brake pedal support bracket into position and install three nuts attaching to instrument panel.

(11) Place steering column into position and install four nuts retaining the steering column to the dash panel steering column mounting bracket and lower column to the floor (Fig. 7).

(12) Connect the Occupant Restraint Controller (ORC) harness connector.

(13) Connect the steering column wiring. There are seven connectors and clip the harness to the column.

(14) Connect the left side wiring:

(a) Brake switch.

(b) Main bulkhead connector.

(c) Five harness connectors.

(d) Driver airbag connector.

(15) Place steering column bearing shroud and steering column shroud into position and install four steering column shroud retaining screws (Fig. 6).

(16) Place fixed shroud into position and install two steering column fixed shroud retaining screws (Fig. 6).

(17) Install two screws to the hood release handle.

(18) Install the inflatable knee blocker. (Refer to 23 - BODY/INSTRUMENT PANEL/KNEE BLOCKER - INSTALLATION).

(19) Install the lower steering column cover and end cap. (Refer to 23 - BODY/INSTRUMENT PANEL/LOWER STEERING COLUMN COVER AND END CAP - INSTALLATION).

(20) Install the cluster bezel. (Refer to 23 - BODY/INSTRUMENT PANEL/CLUSTER BEZEL - INSTALLATION).

(21) Install over steering column cover. (Refer to 23 - BODY/INSTRUMENT PANEL/STEERING COLUMN OPENING COVER - INSTALLATION).

(22) Install the right end cover. Position over retaining slots and firmly snap into place.

(23) Connect the right side wire connectors to the HVAC behind the glove box area and the two antenna connectors behind the glove box hinge.

(24) Install the glove box:

(a) Install glove box into the vehicle. Line up the hinges and firmly snap together.

(b) Push in on sides of glove box bin and raise door.

(25) Install two screws to each right and left cowl trim covers.

(26) Connect the wire connectors to the Passenger Airbag.

(27) Install the screws attaching the instrument panel frame to the dash panel below windshield opening.

(28) Install screws attaching instrument panel frame to the dash panel below windshield opening (Fig. 4).

(29) Install the instrument panel top cover and silencer. (Refer to 23 - BODY/INSTRUMENT PANEL/INSTRUMENT PANEL TOP PAD - INSTALLATION).

(30) Install both left and right side A-pillar trim covers.

(31) Install bolts attaching the lower supports to the floor pan (Fig. 3).

(32) Install bolts attaching the lower supports to the instrument panel frame.

(33) Install the lower console:

(a) Install lower console to vehicle.

(b) Connect the auxiliary power outlet.

(c) Install the six retaining screws.

(34) Connect the battery negative cable.

INSTRUMENT PANEL CENTER BEZEL

REMOVAL

(1) Disconnect and isolate the battery negative cable.

(2) Insert the trim stick (special tool #C-4755) or equivalent between access cover and center bezel gently pry outward.

(3) Carefully pry the access cover from the instrument panel (Fig. 10).

(4) Remove the two center bezel attaching screws.

(5) Using a trim stick or equivalent, gently pry out on the edge of the instrument panel center bezel and pull outward.

(6) Disconnect the wire connectors to the accessory switches and HVAC control.

(7) Remove the instrument panel center bezel from the vehicle.

INSTRUMENT PANEL CENTER BEZEL (Continued)

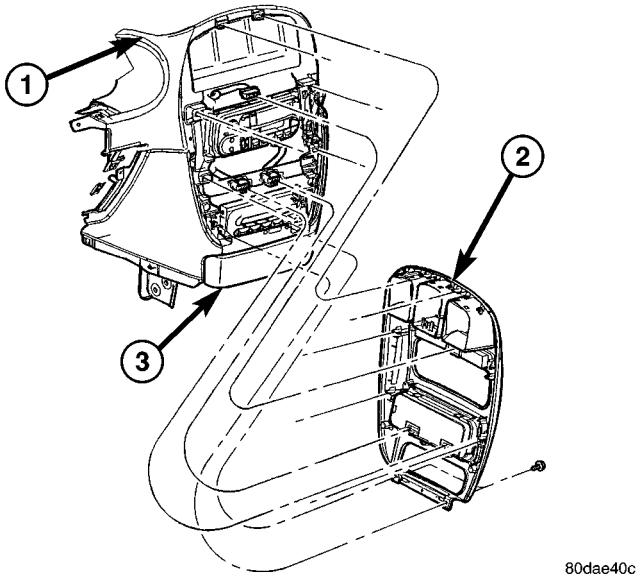

Fig. 10 INSTRUMENT PANEL CENTER BEZEL

1 - LOWER INSTRUMENT PANEL
2 - INSTRUMENT PANEL CENTER BEZEL
3 - CUPHOLDER

INSTALLATION

(1) Place center bezel near opening and connect the wire connectors to the accessory switches and HVAC control.

(2) Position the center bezel over the retaining slots and firmly snap the instrument panel center bezel into place (Fig. 10).

(3) Install the two center bezel attaching screws.

(4) Install the screw access cover to the bottom of the center bezel.

INSTRUMENT PANEL RIGHT END CAP

REMOVAL

(1) Open passenger side front door.

(2) Using a trim stick, disengage clips holding end cover to instrument panel (Fig. 11).

INSTALLATION

(1) Position end cover over retaining slots and firmly snap into place (Fig. 11).

(2) Close passenger side front door.

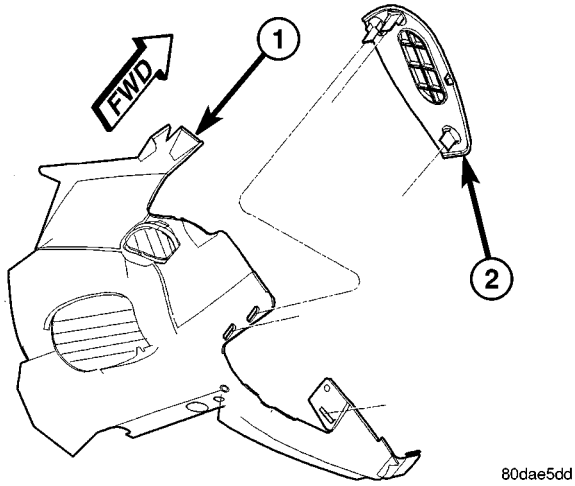

Fig. 11 INSTRUMENT PANEL END CAP

1 - INSTRUMENT PANEL
2 - INSTRUMENT PANEL END CAP

INSTRUMENT PANEL TOP COVER

REMOVAL

(1) Remove A-pillar trim. Using a trim stick (special tool #C-4755) or equivalent, gently pry out and remove.

(2) Using a trim stick, disengage clips attaching rear edge of top cover to instrument panel (Fig. 12).

NOTE: The Instrument Panel Top Cover may be hard to unsnap from the instrument panel. Be sure not to mar, scuff, or damage the instrument panel pad.

(3) Remove top cover from vehicle and silencer.

INSTALLATION

(1) Place the silencer pad into position.

(2) Place instrument panel top cover in position on vehicle (Fig. 12).

(3) Engage clips attaching rear edge of top cover to instrument panel.

(4) Pull top cover rearward.

(5) Install A-pillar trim.

INSTRUMENT PANEL TOP COVER (Continued)

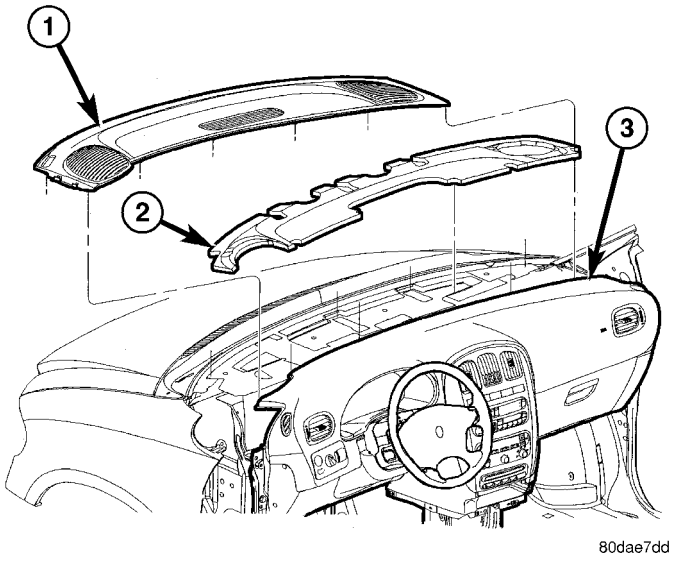

Fig. 12 INSTRUMENT PANEL TOP COVER

1 - INSTRUMENT PANEL TOP COVER
2 - INSTRUMENT PANEL SILENCER PAD
3 - INSTRUMENT PANEL

LOWER CONSOLE

REMOVAL

(1) Remove screws attaching the lower console to floor bracket and instrument panel (Fig. 13).

(2) Slide lower console rearward from around instrument panel supports.

(3) Disconnect the auxiliary power outlet wire connector (if equipped).

(4) Remove lower console from vehicle.

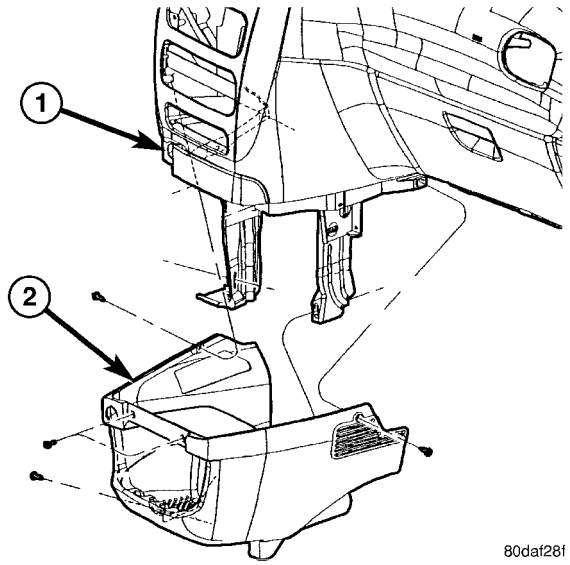

Fig. 13 INSTRUMENT PANEL FLOOR CONSOLE

1 - INSTRUMENT PANEL
2 - INSTRUMENT PANEL FLOOR CONSOLE

INSTALLATION

(1) Connect the auxiliary power outlet wire connector (if equipped).

(2) Install the lower console into the vehicle (Fig. 13).

(3) Slide console forward around instrument panel supports.

(4) Install the screws attaching lower console to floor bracket and instrument panel.

LOWER INSTRUMENT PANEL

REMOVAL

When servicing the lower instrument panel, refer to Body, Instrument Panel, and then the appropriate removal procedure.

(1) Remove the right end cover.

(2) Remove the lower steering column cover (Fig. 14).

(3) Remove the center bezel.

(4) Remove the lower console.

(5) Remove the cup holder and track.

(6) Remove the glove box.

(7) Remove the glove box latch striker.

(8) Remove the glove box lamp.

(9) Remove the eighteen screws holding the lower instrument panel to the reinforcement frame (Fig. 15).

(10) Remove the lower instrument panel from vehicle.

INSTALLATION

When servicing the lower instrument panel, refer to Body, Instrument Panel, and then the appropriate removal procedure.

(1) Install the lower instrument panel into the vehicle (Fig. 15).

(2) Install the eighteen screws holding the lower instrument panel to the reinforcement frame.

(3) Install the glove box lamp.

(4) Install the glove box latch striker.

(5) Install the glove box.

(6) Install the cup holder and track.

(7) Install the lower console.

(8) Install the center bezel.

(9) Install the lower steering column cover (Fig. 14).

(10) Install the right end cover.

LOWER INSTRUMENT PANEL (Continued)

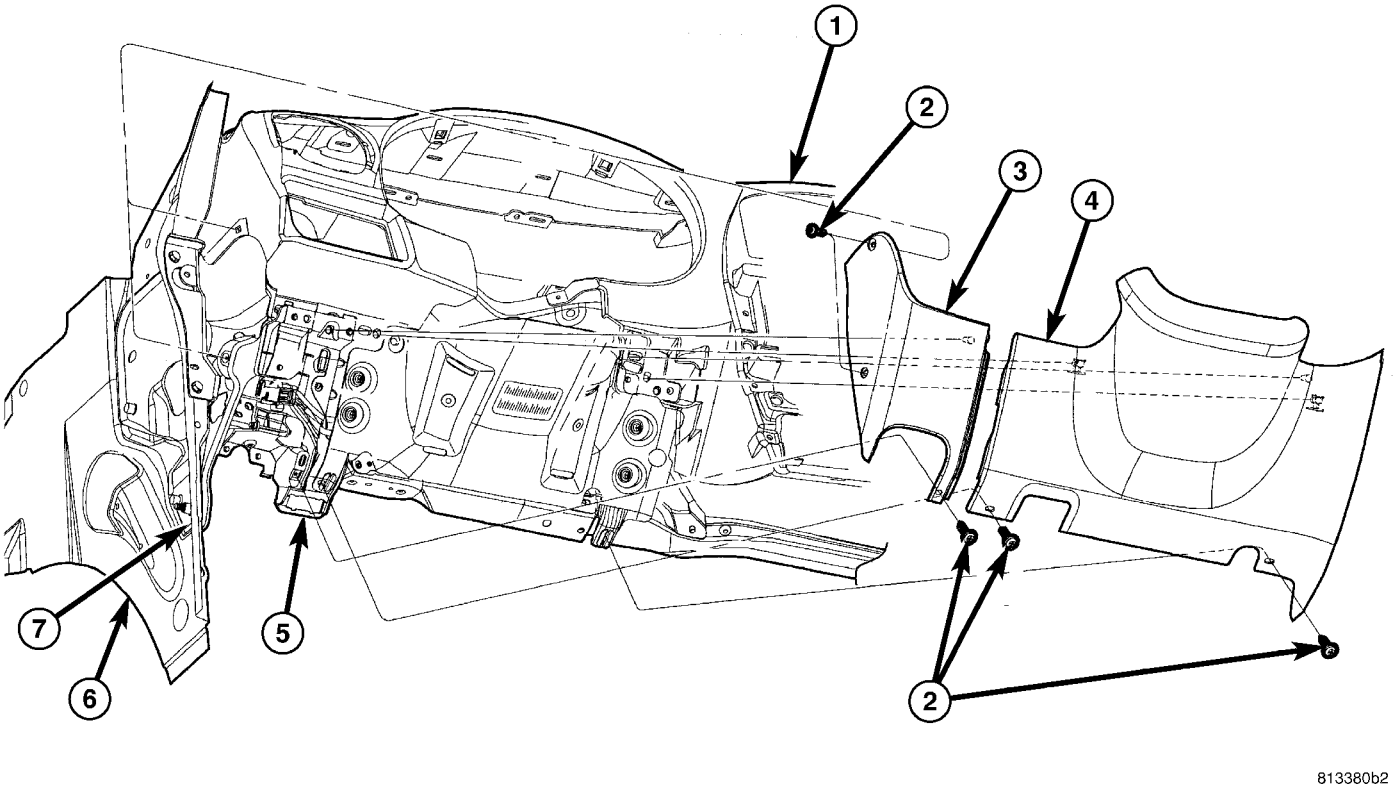

Fig. 14 STEERING COLUMN COVER AND END CAP

1 - INSTRUMENT PANEL UPPER AND LOWER PANEL
2 - ATTACHING SCREW(S)
3 - END CAP
4 - INSTRUMENT PANEL STEERING COLUMN COVER
5 - INSTRUMENT PANEL STEERING COLUMN COVER PLATE
6 - COWL PANEL
7 - COWL SIDE TAPPING PLATE

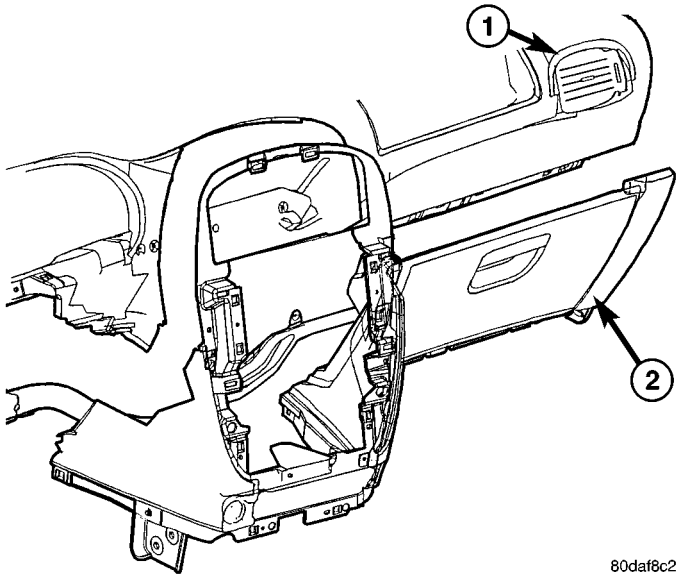

Fig. 15 LOWER INSTRUMENT PANEL

1 - INSTRUMENT PANEL
2 - LOWER INSTRUMENT PANEL

LOWER STEERING COLUMN COVER

REMOVAL

(1) Use trim stick to gently pry rt edge of steering column cover from lower rt panel just enough to disengage 'belt loops' (Fig. 16).

(2) Pull lower steering column cover rearward to release spring clips and remove from the vehicle.

(3) Remove the three screws attaching the end cap to instrument panel.

(4) Pull end cap outward to release spring clips and remove from the vehicle

INSTALLATION

(1) Place the end cap into position and push spring clips into position (Fig. 16).

(2) Attach left side of lower steering column cover first. Align locating ribs into left end cap and rock cover to right side and align belt loops into position into instrument lower right panel.

LOWER STEERING COLUMN COVER (Continued)

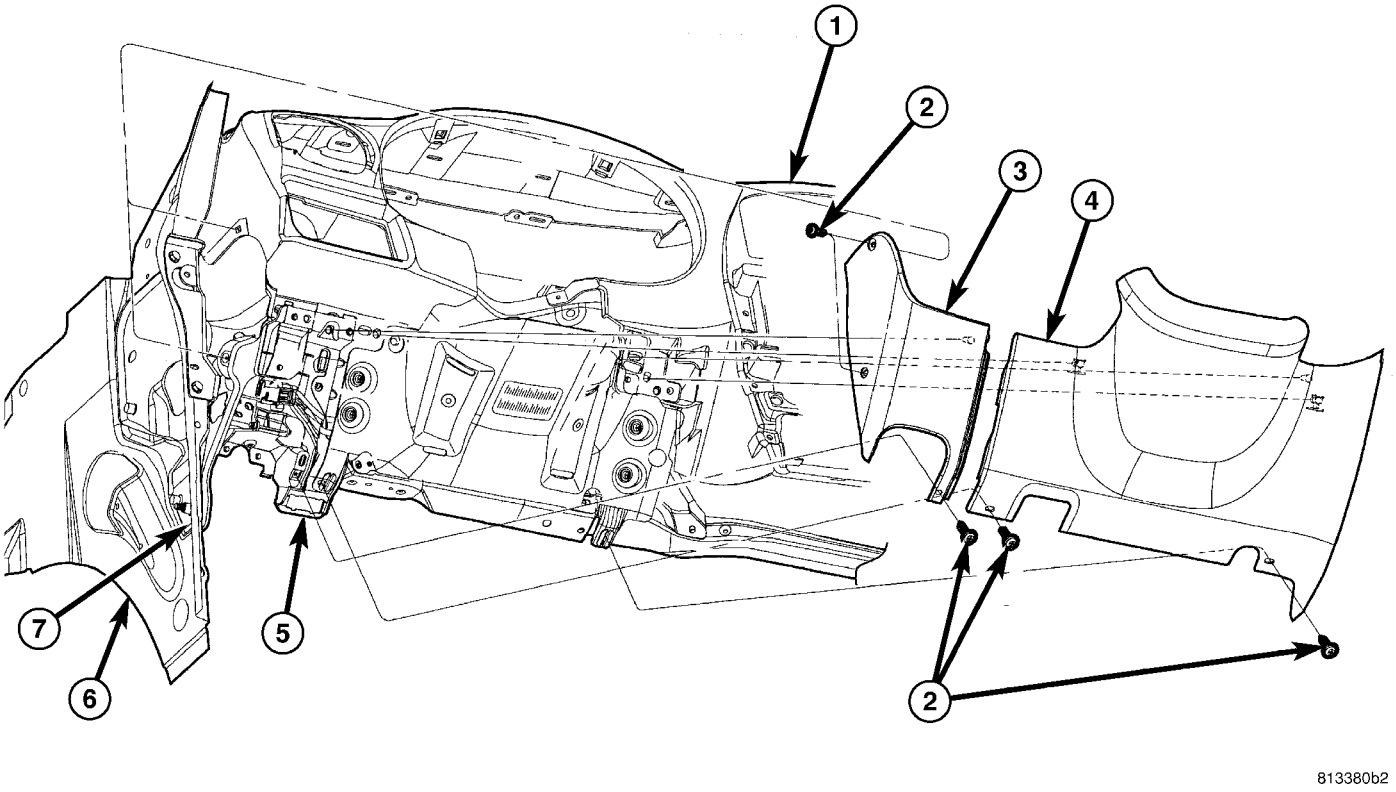

Fig. 16 STEERING COLUMN COVER AND END CAP

1 - INSTRUMENT PANEL UPPER AND LOWER PANEL
2 - ATTACHING SCREW(S)
3 - END CAP
4 - INSTRUMENT PANEL STEERING COLUMN COVER
5 - INSTRUMENT PANEL STEERING COLUMN COVER PLATE
6 - COWL PANEL
7 - COWL SIDE TAPPING PLATE

(3) Place the lower steering column cover into position and push spring clips into position.

(4) Install the two screws attaching the lower steering column cover to instrument panel.

BLOCKER- INFLATABLE KNEE

REMOVAL

(1) Remove lower steering column cover (Refer to 23 - BODY/INSTRUMENT PANEL/STEERING COLUMN OPENING COVER - REMOVAL).

(2) Remove the park brake release handle link from the park brake release handle.

(3) Disengage inflatable knee blocker wire connector from lower instrument and disconnect the wire connector (Fig. 17).

(4) Remove screws attaching to instrument panel.

(5) Remove inflatable knee blocker from vehicle.

INSTALLATION

(1) Place inflatable knee blocker into position (Fig. 17).

(2) Connect inflatable knee blocker wire connector and install inflatable knee blocker attaching screws.

(3) Install the steering column cover backing plate into vehicle.

(4) Install park brake release handle link to park brake release handle.

(5) Install the lower steering column cover (Refer to 23 - BODY/INSTRUMENT PANEL/STEERING COLUMN OPENING COVER - INSTALLATION).

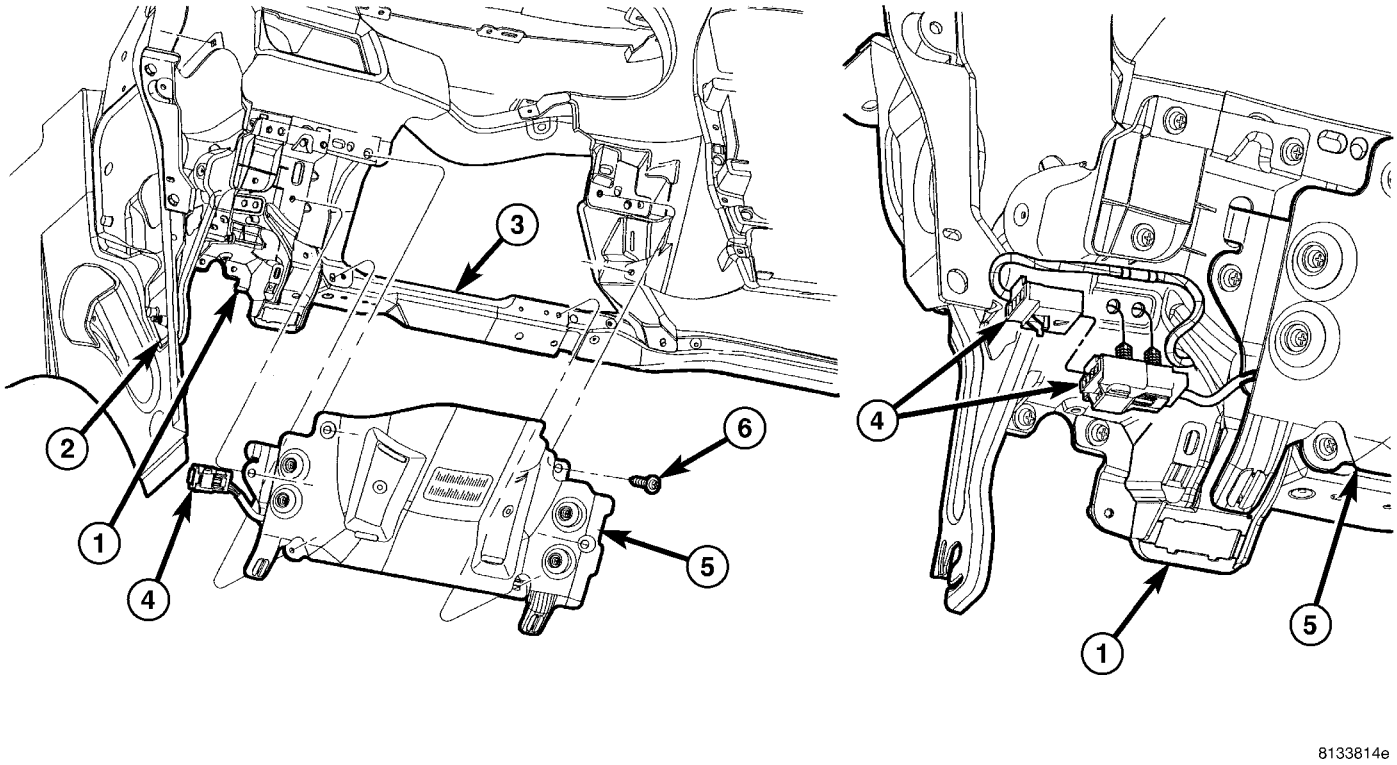

8133814e

Fig. 17 INFLATABLE KNEE BLOCKER

1 - INSTRUMENT PANEL COLUMN COVER PLATE
2 - COWL SIDE TAPPING PLATE
3 - LOWER INSTRUMENT PANEL REINFORCEMENT
4 - INFLATABLE KNEE BLOCKER WIRE CONNECTOR
5 - INFLATABLE KNEE BLOCKER
6 - KNEE LOCKER ATTACHING SCREWS

OVER STEERING COLUMN COVER

REMOVAL

(1) Taking a firm grasp of the over steering column cover front edge, give a quick upward pulling motion to disengage the cover from the instrument panel (Fig. 18).

(2) Remove the over steering column cover from the vehicle.

INSTALLATION

(1) Place the over steering column cover into position over the retaining slots and firmly snap into place (Fig. 18).

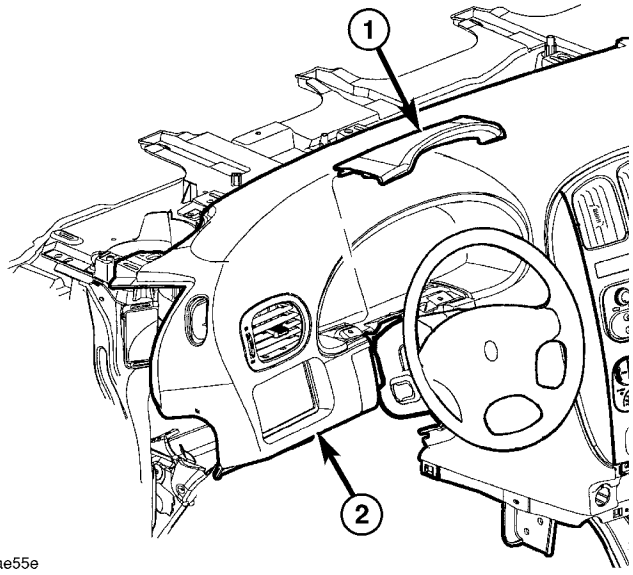

80dae55e

Fig. 18 OVER STEERING COLUMN COVER

1 - INSTRUMENT PANEL OVER STEERING COLUMN COVER
2 - INSTRUMENT PANEL

INSTRUMENT PANEL TOP PAD ASSEMBLY

REMOVAL

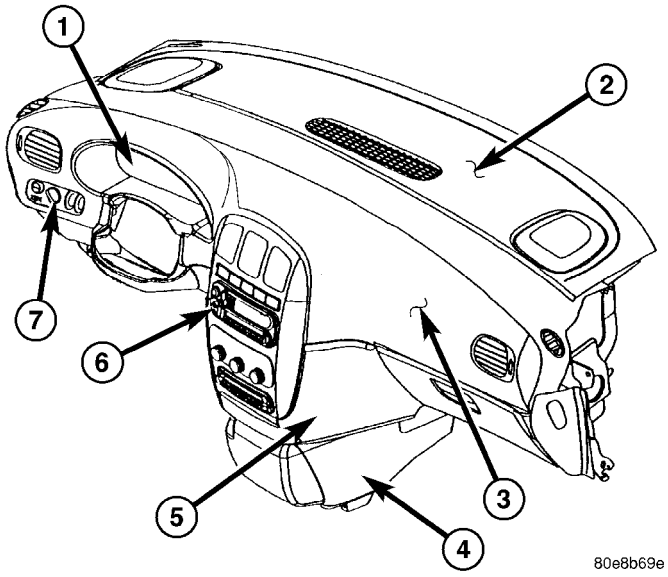

Fig. 19 INSTRUMENT PANEL ASSEMBLY

1 - INSTRUMENT CLUSTER
2 - TOP COVER
3 - PAD AND PANEL ASSEMBLY
4 - LOWER CONSOLE
5 - LOWER PANEL
6 - RADIO
7 - HEADLAMP SWITCH

(1) Remove the instrument cluster (Fig. 19). (Refer to 8 - ELECTRICAL/INSTRUMENT CLUSTER - REMOVAL)

(2) Remove the message center (Fig. 19). (Refer to 8 - ELECTRICAL/MESSAGE CENTER - REMOVAL)

(3) Remove the radio (Fig. 19). (Refer to 8 - ELECTRICAL/AUDIO/RADIO - REMOVAL)

(4) Remove the headlamp switch (Fig. 19). (Refer to 8 - ELECTRICAL/LAMPS/LIGHTING - EXTERIOR/HEADLAMP SWITCH - REMOVAL)

(5) Remove the lower console (Fig. 19). (Refer to 23 - BODY/INSTRUMENT PANEL/LOWER CONSOLE - REMOVAL)

(6) Remove the lower panel. (Refer to 23 - BODY/INSTRUMENT PANEL/LOWER INSTRUMENT PANEL TRIM - REMOVAL)

(7) Remove the instrument panel assembly. (Refer to 23 - BODY/INSTRUMENT PANEL/INSTRUMENT PANEL ASSEMBLY - REMOVAL)

(8) Remove the instrument panel speakers.

(9) Remove the glove box light.

(10) Remove the two passenger air bag mounting bolts (Fig. 20).

(11) Loosen the three passenger air bag support bracket bolts to the hydro-form rail (Fig. 20).

(12) Remove the 16 screws along the upper edge of the pad & panel assembly.

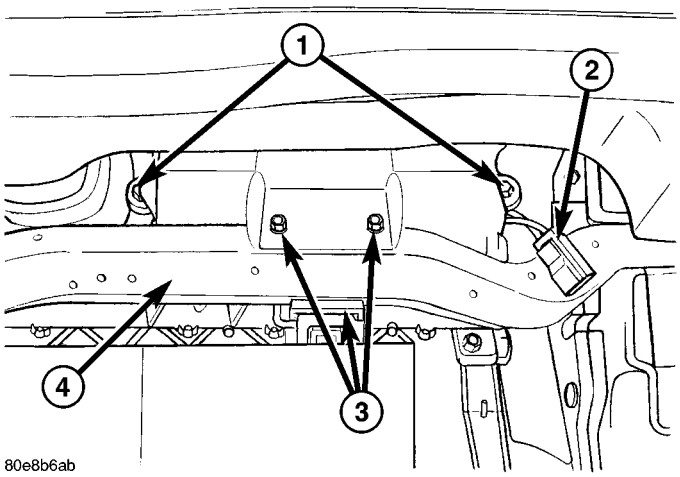

Fig. 20 AIRBAG MOUNTING HARDWARE

1 - AIR BAG SCREWS (2)
2 - ELECTRICAL CONNECTOR
3 - AIR BAG SUPPORT BRACKET BOLTS (3)
4 - HYDRO-FORM INSTRUMENT PANEL SUPPORT RAIL

(13) Remove the 19 screws along the lower edge of the pad & panel assembly.

(14) Remove the pad and panel assembly (Fig. 19).

INSTALLATION

(1) Position the pan & panel assembly onto the instrument panel support structure (Fig. 19).

(2) Install the 19 screws along the lower edge of the pad & panel assembly (Fig. 19).

(3) Install the 16 screws along the upper edge of the pad & panel assembly.

(4) Install and tighten the two passenger air bag mounting screws (Fig. 20).

(5) Tighten the three passenger air bag support bracket bolts to the hydro-form tube (Fig. 20).

(6) Install the glove box light.

(7) Install the instrument panel speakers.

(8) Install the instrument panel assembly. (Refer to 23 - BODY/INSTRUMENT PANEL/INSTRUMENT PANEL ASSEMBLY - INSTALLATION)

(9) Install the lower panel. (Refer to 23 - BODY/INSTRUMENT PANEL/LOWER INSTRUMENT PANEL TRIM - INSTALLATION)

(10) Install the lower console. (Refer to 23 - BODY/INSTRUMENT PANEL/LOWER CONSOLE - INSTALLATION)

(11) Install the headlamp switch. (Refer to 8 - ELECTRICAL/LAMPS/LIGHTING - EXTERIOR/HEADLAMP SWITCH - INSTALLATION)

(12) Install the radio. (Refer to 8 - ELECTRICAL/AUDIO/RADIO - INSTALLATION)

(13) Install the message center. (Refer to 8 - ELECTRICAL/MESSAGE CENTER - INSTALLATION)

(14) Install the instrument cluster. (Refer to 8 - ELECTRICAL/INSTRUMENT CLUSTER - INSTALLATION)

INTERIOR

TABLE OF CONTENTS

page

A-PILLAR LOWER EXTENSION TRIM
REMOVAL 79
INSTALLATION 79
A-PILLAR TRIM
REMOVAL 79
INSTALLATION 79
ASSIST HANDLE
REMOVAL 79
INSTALLATION 79
B-PILLAR LOWER TRIM
REMOVAL 79
INSTALLATION 80
B-PILLAR UPPER TRIM
REMOVAL 80
INSTALLATION 80
CARPETS AND FLOOR MATS
REMOVAL 81
INSTALLATION 81
CARPETS - FOLD-IN-FLOOR
REMOVAL 82
INSTALLATION 83
CARPET TRIM RING AND COVER - FOLD-IN-FLOOR
REMOVAL 84
INSTALLATION 84
COWL TRIM
REMOVAL 88
INSTALLATION 88
C-PILLAR TRIM
REMOVAL 88
INSTALLATION 88
DOOR SILL TRIM PLATE
REMOVAL 89
INSTALLATION 89
FLOOR CONSOLE BASE TRAY
REMOVAL 89
INSTALLATION 89
FLOOR CONSOLE - FOLD-IN-FLOOR
REMOVAL 89
INSTALLATION 89
FLOOR CONSOLE KEY LOCK TUMBLER - FOLD-IN-FLOOR
REMOVAL 90
INSTALLATION 90
FLOOR CONSOLE LID LATCH - FOLD-IN-FLOOR
REMOVAL 90
INSTALLATION 90

page

HEADLINER
REMOVAL 91
INSTALLATION 92
LEFT D-PILLAR TRIM PANEL
REMOVAL 94
INSTALLATION 94
LEFT QUARTER TRIM PANEL
REMOVAL 94
INSTALLATION 94
LIFTGATE SILL PLATE
REMOVAL 94
INSTALLATION 95
QUARTER TRIM BOLSTER
REMOVAL 95
INSTALLATION 95
REAR FLOOR TUB CARPETS INSERT - FOLD-IN-FLOOR
REMOVAL 95
INSTALLATION 96
REAR HEADER TRIM
REMOVAL 96
INSTALLATION 96
REAR HVAC LOUVER
REMOVAL 96
INSTALLATION 97
RIGHT QUARTER TRIM PANEL
REMOVAL 97
INSTALLATION 97
REAR VIEW MIRROR
REMOVAL 97
INSTALLATION 97
RIGHT D-PILLAR TRIM PANEL
REMOVAL 97
INSTALLATION 98
SECOND ROW FLOOR TUB CARPET INSERT - FOLD-IN-FLOOR
REMOVAL 98
INSTALLATION 98
SLIDING DOOR SILL PLATE
REMOVAL 98
INSTALLATION 99
SUN VISOR
REMOVAL 99
INSTALLATION 99
SUN VISOR SUPPORT
REMOVAL 99
INSTALLATION 99

A-PILLAR LOWER EXTENSION TRIM

REMOVAL

(1) Remove instrument panel side cover.
(2) Remove A-pillar extension trim from vehicle by disengaging hidden clips (Fig. 1).

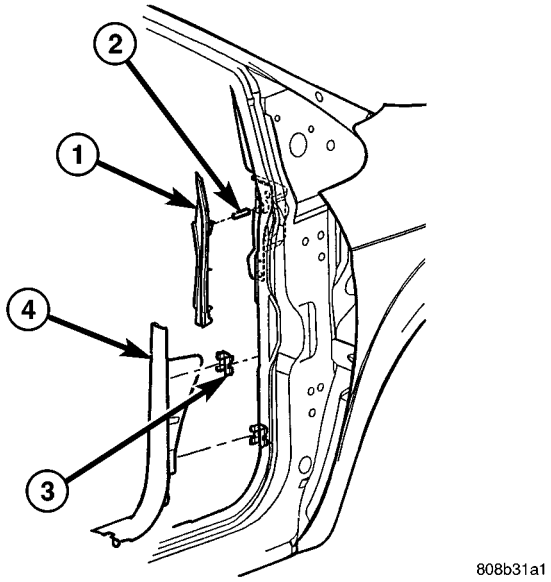

Fig. 1 A-PILLAR LOWER EXTENSION TRIM

1 - FRONT LOWER EXTENSION TRIM
2 - FRONT EXTENSION TRIM TO INSTRUMENT PANEL RETAINER
3 - CLIP
4 - COWL TRIM PANEL

INSTALLATION

(1) Place A-pillar extension trim in position on vehicle (Fig. 1).
(2) Install instrument panel side cover.

A-PILLAR TRIM

REMOVAL

(1) Remove the assist handle if equipped. (Refer to 23 - BODY/INTERIOR/ASSIST HANDLE - REMOVAL)
(2) Disengage hidden clips holding A-pillar trim panel to A-pillar (Fig. 2).
(3) Remove A-pillar trim from vehicle.

INSTALLATION

(1) Position foot on A-pillar trim panel into instrument panel top cover channel.
(2) Position A-pillar trim in vehicle.
(3) Align locator pins.
(4) Engage hidden clips.

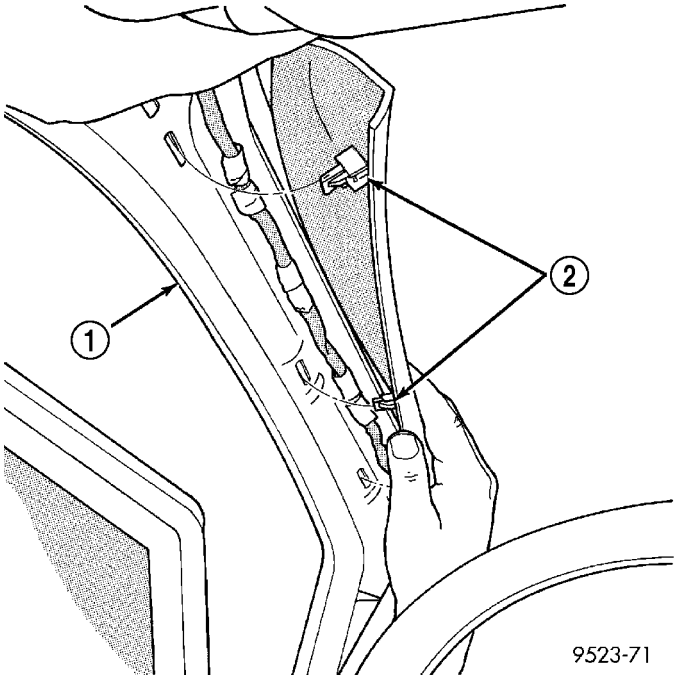

Fig. 2 A-PILLAR TRIM

1 - A-PILLAR
2 - CLIPS

(5) Install the assist handle, if equipped. (Refer to 23 - BODY/INTERIOR/ASSIST HANDLE - INSTALLATION)

ASSIST HANDLE

REMOVAL

(1) Using a trim stick (C-4755), remove screw access covers from grab-handle.
(2) Remove screws holding grab-handle to roof rail.
(3) Remove grab-handle from vehicle.

INSTALLATION

(1) Place grab-handle in position on vehicle.
(2) Install screws to hold grab-handle to roof rail.
(3) Install screw access covers into grab-handle.

B-PILLAR LOWER TRIM

REMOVAL

NOTE: The driver's side a double ended stud is used. A nut has to be removed for the seat belt anchor removal and the stud for the retractor removal.

NOTE: On the passenger side there is a belt tension sensor.

B-PILLAR LOWER TRIM (Continued)

(1) Slide lower seat belt cover rearward to expose anchor fastener.
(2) Remove bolt/nut attaching lower seat belt anchor to floor.
(3) Remove upper B-pillar trim cover.
(4) Remove access panel from B-pillar trim (Fig. 3).
(5) Disengage hidden clips attaching lower trim cover to B-pillar.
(6) Remove lower B-pillar trim cover from vehicle.

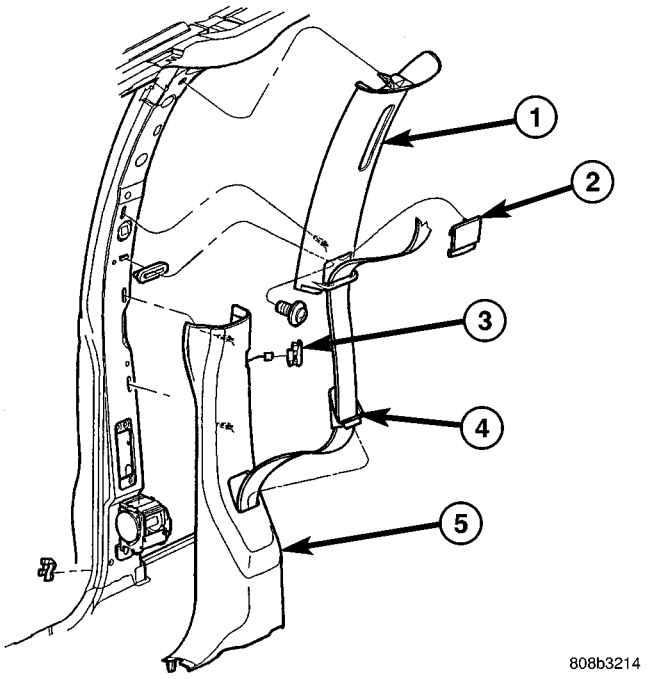

Fig. 3 LOWER B-PILLAR TRIM COVER

1 - B-PILLAR UPPER TRIM
2 - B-PILLAR UPPER PLUG
3 - POWER SLIDING DOOR SWITCH AND BEZEL
4 - BELT ASSEMBLY
5 - B-PILLAR LOWER TRIM

INSTALLATION

NOTE: The driver's side a double ended stud is used. A nut has to be removed for the seat belt anchor removal and the stud for the retractor removal.

NOTE: On the passenger side there is a belt tension sensor.

(1) On the passenger side secure grommet to seat belt sensor connector into bottom of B-pillar lower trim prior to install B-pillar lower trim cover.
(2) Place lower B-pillar trim cover in position on vehicle (Fig. 3).
(3) Insert seat belt through hole in lower B-pillar trim.
(4) Engage hidden clips attaching lower trim cover to B-pillar.
(5) Install access cover.
(6) Install upper B-pillar trim cover.
(7) Place seat belt anchor in position on floor so webbing is pointed rearward and slightly outboard.
(8) Install bolt/nut attaching lower seat belt anchor to floor. Tighten seat belt anchor bolt/nut to 39 N·m (29 ft. lbs.) torque.
(9) Verify that seat belt anchor does not interfere with seat track travel.

B-PILLAR UPPER TRIM

REMOVAL

(1) Remove bolt attaching lower seat belt anchor to floor.
(2) Lower shoulder belt height adjuster to the bottom of travel.
(3) Remove shoulder belt turning loop from height adjuster.
(4) Use a Snap-on® Trim Pad Remover tool (A179A), or equivalent, and remove shoulder belt height adjuster knob.
(5) Remove shoulder belt bezel from trim cover (Fig. 3).
(6) Remove screw attaching trim cover to B-pillar from inside bezel cavity.
(7) Disengage hidden clips attaching trim cover to B-pillar.
(8) Remove B-pillar trim cover from vehicle.

INSTALLATION

(1) Insert seat belt through B-pillar trim and web guide (Fig. 3).
(2) Place B-pillar trim cover in position on vehicle.
(3) Engage hidden clips attaching trim cover to B-pillar.
(4) Install shoulder belt bezel into trim cover.
(5) Install height adjuster knob.
(6) Install shoulder belt turning loop onto height adjuster. Tighten bolt to 39 N·m (29 ft. lbs.) torque.
(7) Place seat anchor in position on floor so webbing is pointed rearward and slightly outboard or self aligning tab on passenger side.
(8) Install bolt attaching lower seat belt anchor to floor. Tighten seat belt bolt to 39 N·m (29 ft. lbs.) torque.

CARPETS AND FLOOR MATS

REMOVAL

(1) Remove front seats. (Refer to 23 - BODY/SEATS/SEAT - REMOVAL)
(2) Remove front center console.
(3) Remove heel blocker (plastic block below accelerator pedal).
(4) Remove the remaining seats. Refer to the Owner's Manual for the proper procedures.
(5) Remove front cowl panels and sill plates.
(6) Remove sliding door sill plates. (Refer to 23 - BODY/INTERIOR/SLIDING DOOR SILL PLATE - REMOVAL)
(7) Remove the cargo organizer, if equipped.
(8) Remove liftgate scuff plate. (Refer to 23 - BODY/INTERIOR/LIFTGATE SCUFF PLATE - REMOVAL)
(9) Remove lower B-pillar trim covers.
(10) Remove D-pillar trim covers.
(11) Remove Quarter trim panels.
(12) Remove floor escutcheons (Fig. 4).
(13) Remove the floor console trays. (Refer to 23 - BODY/INTERIOR/FLOOR CONSOLE TRAY - REMOVAL)
(14) Remove push pin fasteners attaching carpet to floor in front seat and rear area.
(15) Roll carpet from under instrument panel to center of sliding door.
(16) Roll and fold carpet forward away from rear door opening.
(17) Extract carpet through sliding door opening (Fig. 5).

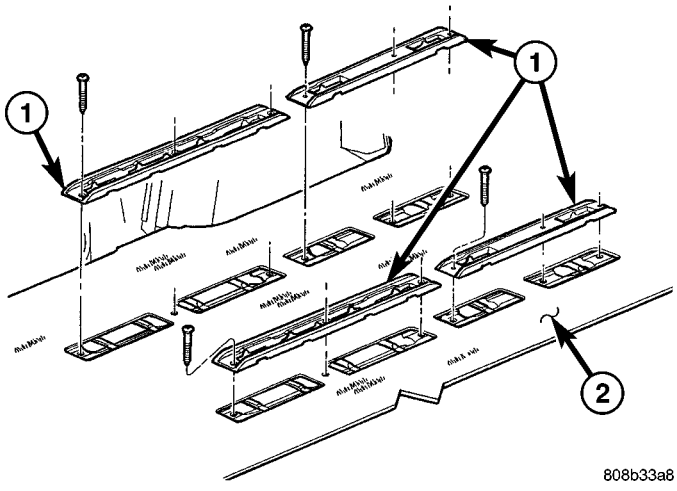

Fig. 4 SEAT ESCUTCHEONS

1 - SEAT ESCUTCHEON
2 - FLOOR CARPET

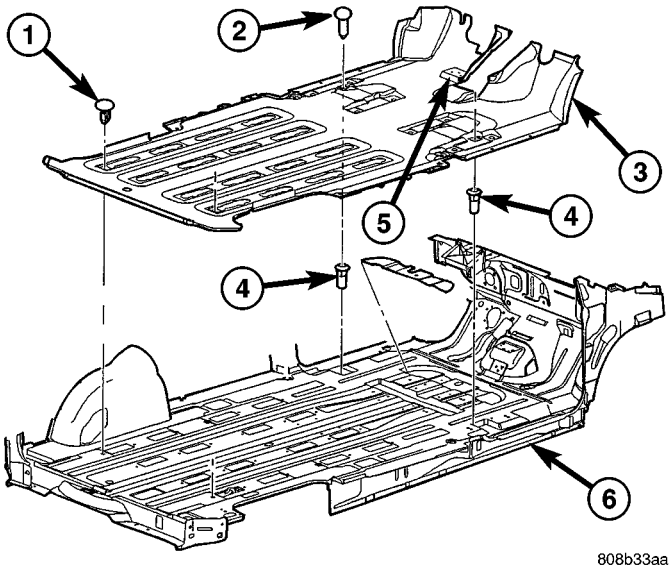

Fig. 5 FLOOR CARPET

1 - CARPET LOCATOR GROMMET
2 - PUSH PIN
3 - CARPET
4 - CARPET GROMMET
5 - HEEL PROTECTOR PAD
6 - BODY ASSEMBLY

INSTALLATION

(1) Insert carpet through sliding door opening.
(2) Roll carpet rearward toward rear door opening.
(3) Roll carpet under instrument panel.
(4) Install push pins fasteners through carpet and grommet into floor to attach carpet to floor in front seat area (Fig. 5).
(5) Install push pins fasteners in the rear area.

CAUTION: Ensure that the correct fasteners are installed in the proper locations. Damage to the fuel tank may result.

(6) Install floor escutcheons (Fig. 4).
(7) Install the floor console trays. (Refer to 23 - BODY/INTERIOR/FLOOR CONSOLE TRAY - INSTALLATION)
(8) Install Quarter trim panels.
(9) Install D-pillar trim covers.
(10) Install lower B-pillar trim covers.
(11) Install rear door sill plate.
(12) Install sliding door sill plates. (Refer to 23 - BODY/INTERIOR/SLIDING DOOR SILL PLATE - INSTALLATION)
(13) Install front cowl panels and sill plates.
(14) Install the passenger seats. Refer to the Owner's Manual for proper procedures.
(15) Install front center console.
(16) Install heel blocker (plastic block below accelerator pedal).
(17) Install front seats. (Refer to 23 - BODY/SEATS/SEAT - INSTALLATION)

CARPETS - FOLD-IN-FLOOR

REMOVAL

(1) Remove floor mats.
(2) Remove front seats. (Refer to 23 - BODY/SEATS/SEAT - REMOVAL)
(3) Remove instrument panel lower console. (Refer to 23 - BODY/INSTRUMENT PANEL/STORAGE BIN - REMOVAL).
(4) Remove the floor console base tray and disconnect wire connector from the base tray.(Refer to 23 - BODY/INTERIOR/FLOOR CONSOLE BASE TRAY - REMOVAL)
(5) Remove heel blocker (plastic block below accelerator pedal).
(6) Remove winch plug (spare tire winch) (Fig. 6).
(7) Remove front cowl panels and sill plates.
(8) Remove kick plate and heel pad at gas pedal
(9) Remove seat belt anchors at the passenger side B-pillar and driver side C-pillars
(10) Fold in floor second and third row seats. Refer to the Owner's Manual for the proper procedures.
(11) Remove front carpet trim ring and cover (Fig. 7)(Refer to 23 - BODY/INTERIOR/CARPETS AND FLOOR MATS - REMOVAL). (Refer to 23 - BODY/INTERIOR/CARPETS TRIM RING AND COVER REMOVAL).

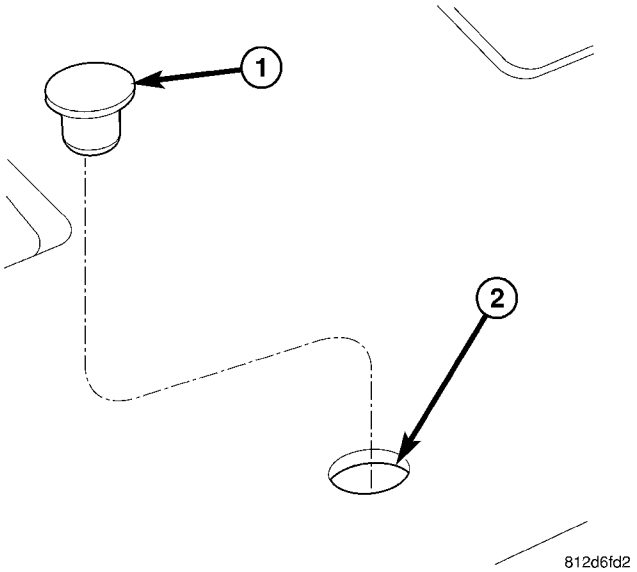

Fig. 6 ACCESS TO WINCH

1 - WINCH PLUG
2 - ACCESS HOLE TO WINCH

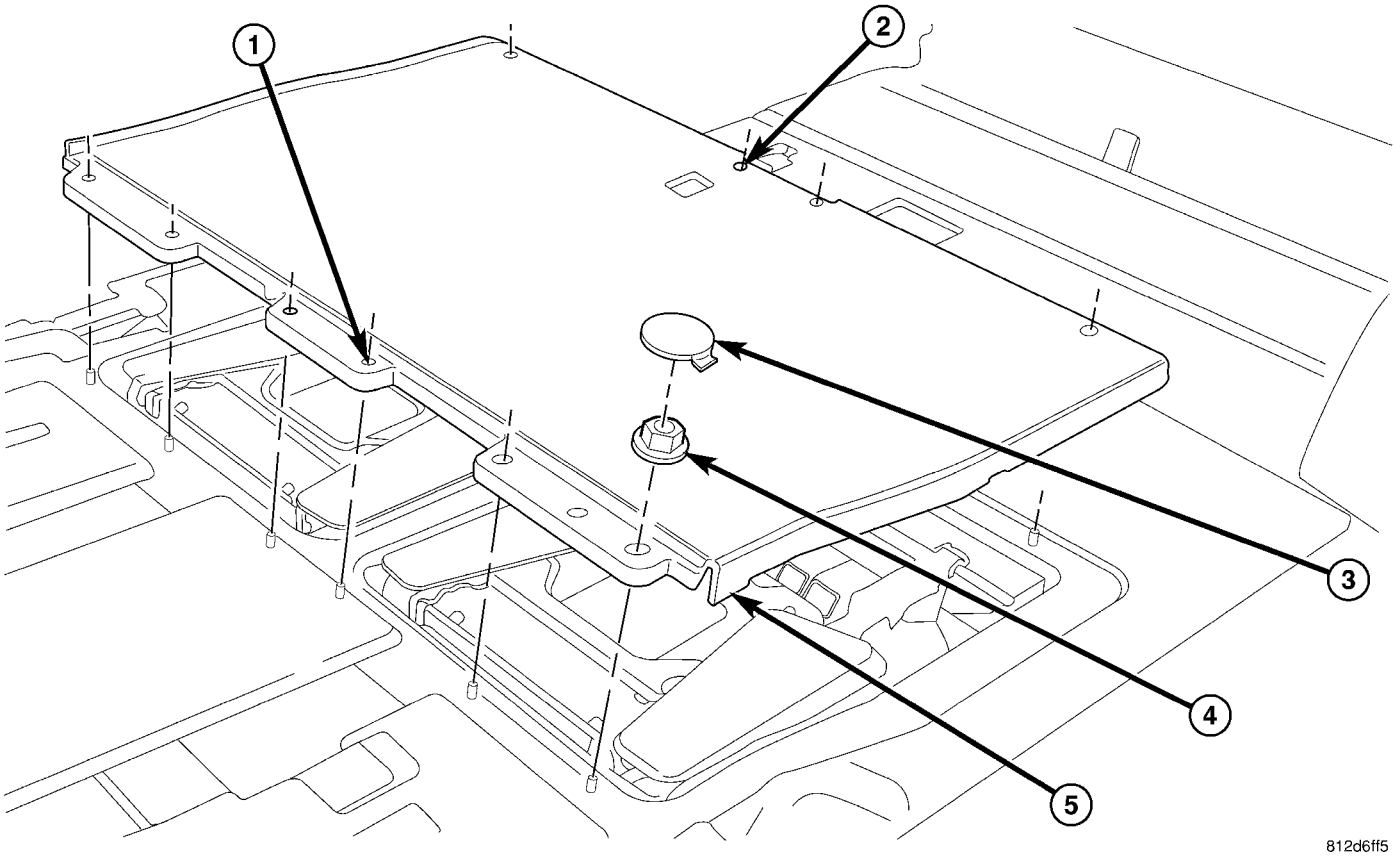

Fig. 7 FRONT TRIM RING AND COVER ASSEMBLY

1 - FORWARD 4-WAY LOCATOR
2 - REARWARD 2-WAY LOCATOR
3 - LOAD FLOOR PLUG (8)
4 - WELD STUD NUTS (10)
5 - TRIM RING COVER

CARPETS - FOLD-IN-FLOOR (Continued)

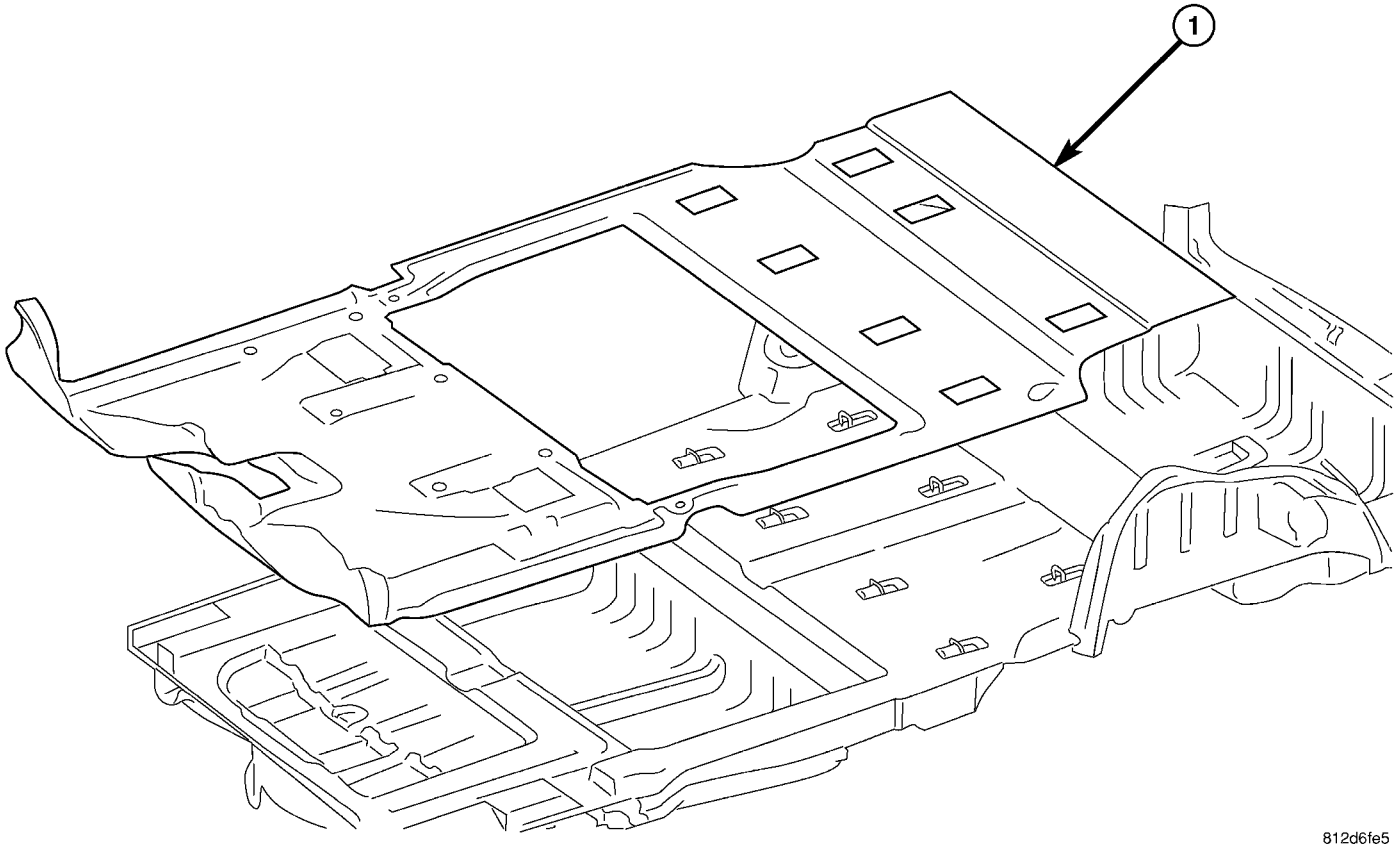

Fig. 8 FRONT FLOOR CARPET

FRONT CARPET

(12) Remove sliding door sill plates. (Refer to 23 - BODY/INTERIOR/SLIDING DOOR SILL PLATE - REMOVAL)

(13) Remove lower B-pillar trim covers.

(14) Remove push pin fasteners attaching carpet to floor in front seat area.

(15) Roll carpet from under instrument panel to center of sliding door.

(16) Pull carpet out from under the quarter trim panel (Fig. 8).

(17) Using a trim stick, release clips attaching third row carpet cover, and remove (Fig. 9).

(18) Remove rear carpet screws attaching rear of carpet.

(19) Roll and fold carpet forward away from rear door opening.

(20) Remove carpet through sliding door opening.

INSTALLATION

(1) Place carpet through sliding door opening into position.

(2) Roll carpet rearward towards the rear door opening.

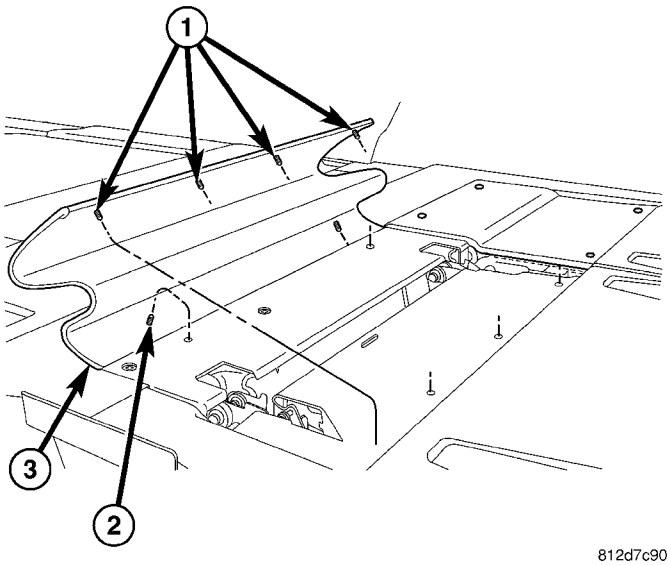

Fig. 9 ANCHOR MOLDING

1 - 2-WAY CLIPS INTO SEAT FRAME
2 - 4-WAY LOCATING PINS (2)
3 - FRONT SEAT ANCHOR MOLDING

CARPETS - FOLD-IN-FLOOR (Continued)

(3) Roll carpet forward under instrument panel (Fig. 8).

(4) Install push pins fasteners through carpet and grommet into floor to attach carpet to floor in front seat area.

(5) Pull wire harnesses through the carpet as needed.

(6) Smooth out the carpet and allowing weld studs to go all the way through the carpet.

(7) Install rear push pins fasteners attaching rear of carpet.

(8) Place third row carpet cover into position and press clips into position (Fig. 9).

(9) Slide the carpet under the quarter trim panel into position.

(10) Install lower B-pillar trim covers.

(11) Install sliding door sill plates. (Refer to 23 - BODY/INTERIOR/SLIDING DOOR SILL PLATE - INSTALLATION).

(12) Install front carpet trim ring and cover (Fig. 7). (Refer to 23 - BODY/INTERIOR/CARPETS TRIM RING AND COVER - INSTALLATION)

(13) Install seat belt anchors at the passenger side B-pillar and driver side C-pillars

(14) Install kick plate and heel pad at the gas pedal

(15) Install winch plug (spare tire winch) (Fig. 6).

(16) Install front cowl panels and sill plates.

(17) Install heel blocker (plastic block below accelerator pedal).

(18) Install the floor console base tray and disconnect wire connector from the base tray. (Refer to 23 - BODY/INTERIOR/FLOOR CONSOLE BASE TRAY - INSTALLATION).

(19) Install instrument panel lower console. (Refer to 23 - BODY/INSTRUMENT PANEL/STORAGE BIN - INSTALLATION).

(20) Install front seats. (Refer to 23 - BODY/SEATS/SEAT - REMOVAL).

(21) Install floor mats.

CARPET TRIM RING AND COVER - FOLD-IN-FLOOR

REMOVAL

(1) Move front seats to the full forward position.

(2) Fold the second row seats into the floor.

(3) Remove the load floor plugs (Fig. 10).

(4) Remove the ten weld nuts.

(5) Open door covers (Fig. 11).

(6) Remove the four inter weld nuts (Fig. 12).

(7) Raise the front trim ring and cover up off of the weld studs and remove from vehicle.

INSTALLATION

(1) Place front trim ring and cover assembly into position.

(2) Open door covers (Fig. 11).

(3) Install the four inter weld nuts (Fig. 12).

(4) Close door covers.

(5) Install the ten weld nuts (Fig. 10).

(6) Install the eight load floor plugs.

(7) Open the second row seats into position.

(8) Move front seats to the position.

CARPET TRIM RING AND COVER - FOLD-IN-FLOOR (Continued)

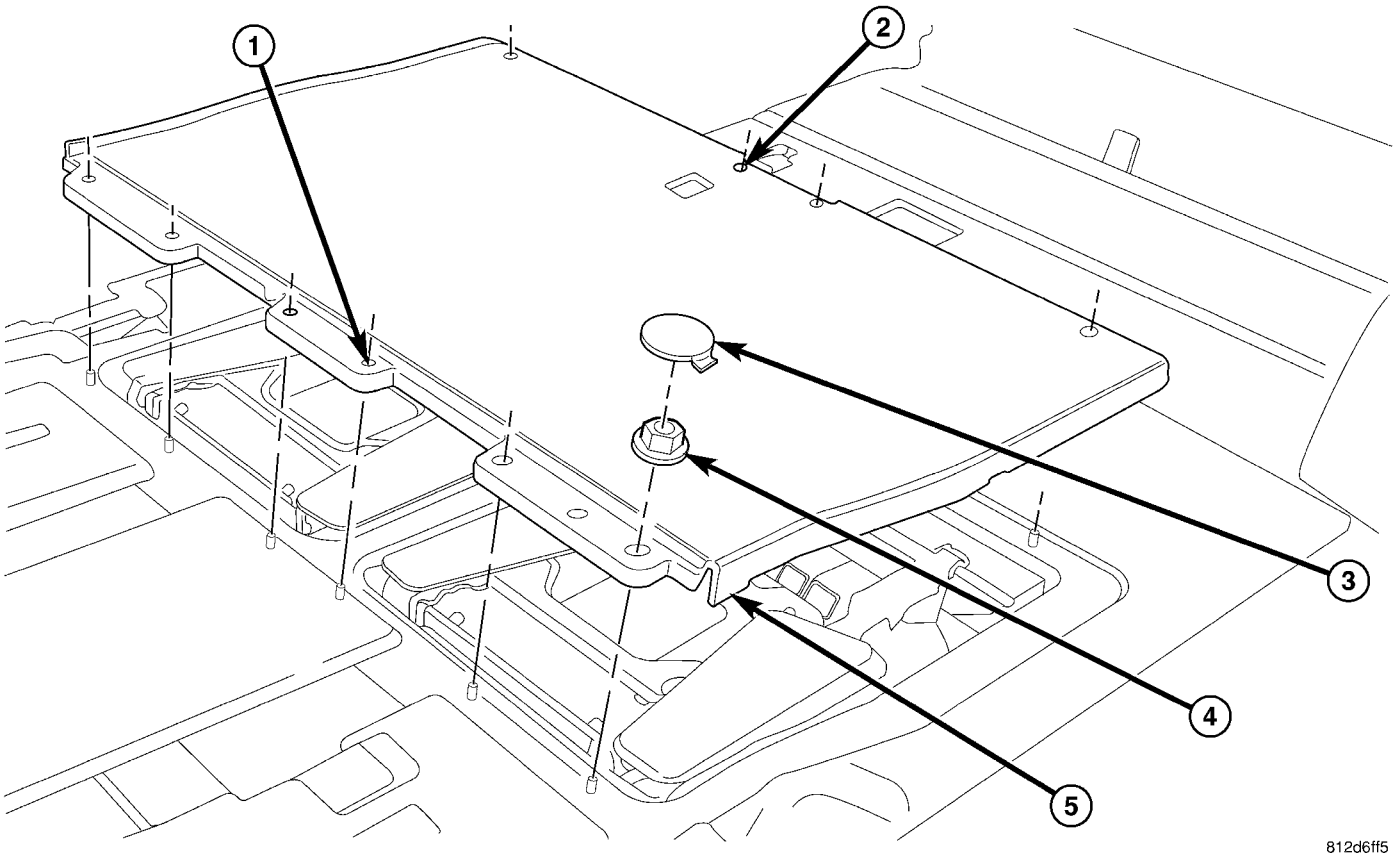

Fig. 10 FRONT TRIM RING AND COVER ASSEMBLY

1 - FORWARD 4-WAY LOCATOR
2 - REARWARD 2-WAY LOCATOR
3 - LOAD FLOOR PLUG (8)
4 - WELD STUD NUTS (10)
5 - TRIM RING COVER

COWL TRIM (Continued)

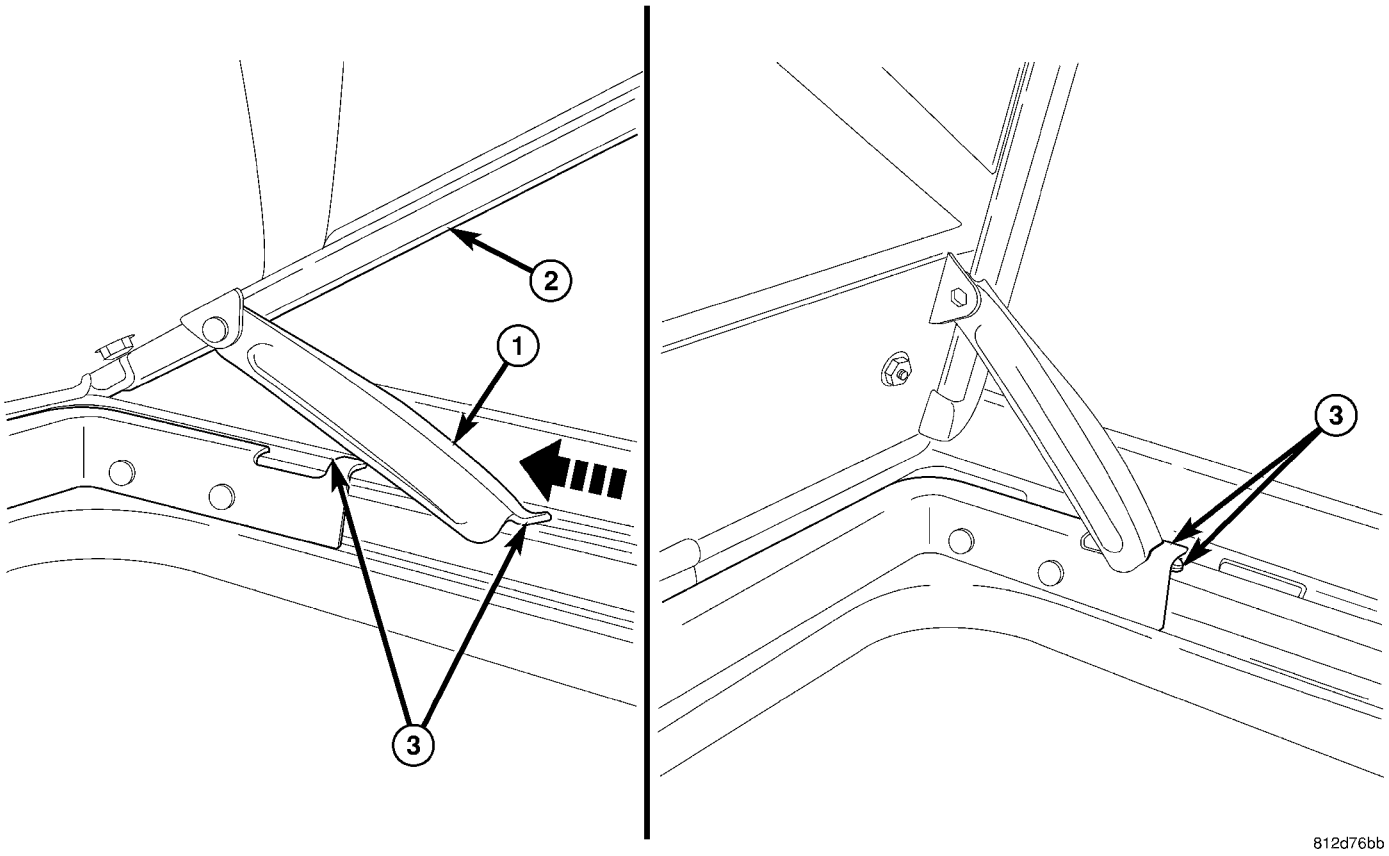

Fig. 11 DOOR COVER

1 - PROP ROD
2 - DOOR COVER ASSEMBLY
3 - FINGER END OF PROP ROD AND PLACE INTO BRACKET

COWL TRIM (Continued)

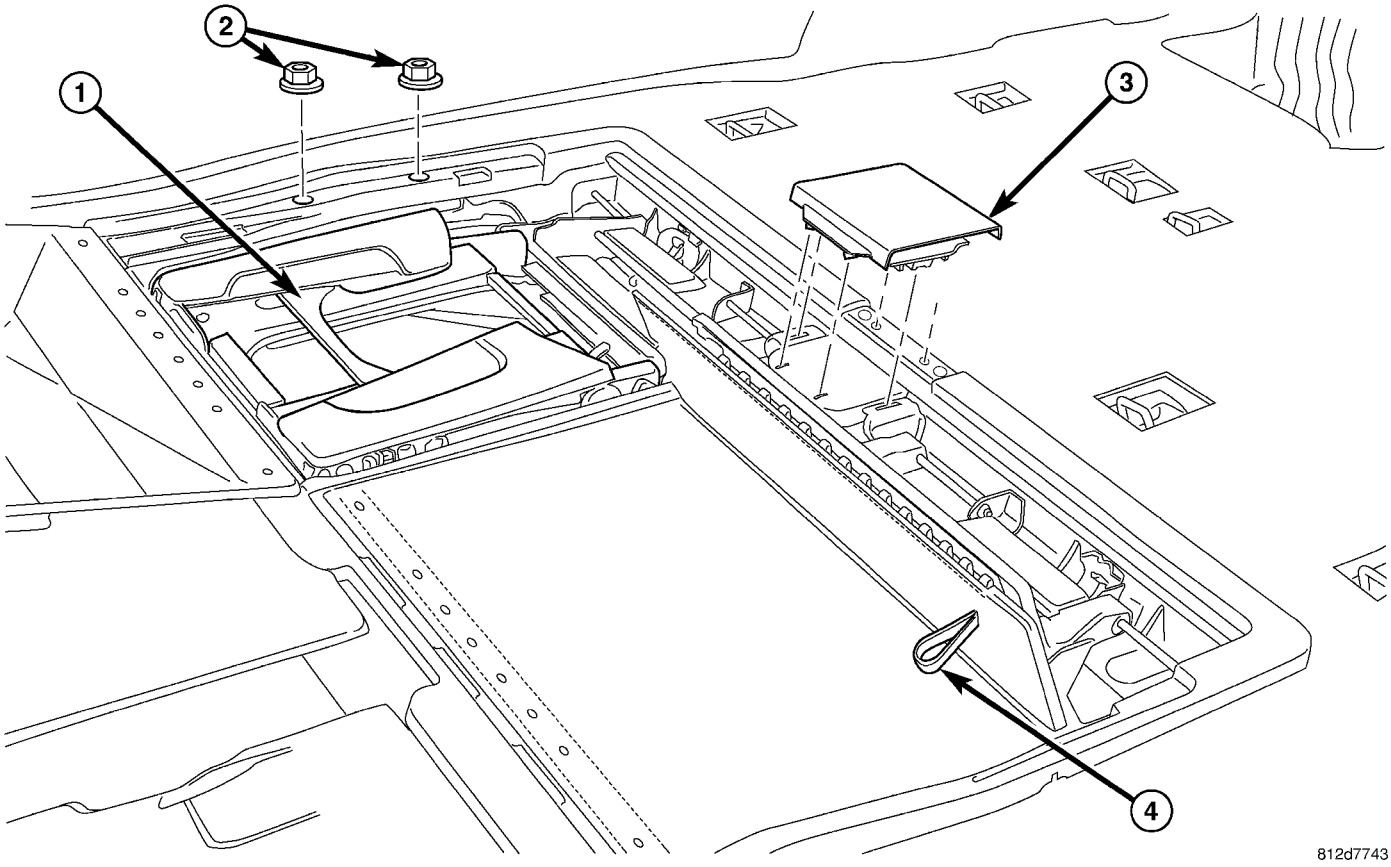

Fig. 12 FRONT COVER ASSEMBLY

1 - SEATS IN THE FOLD-IN-FLOOR POSITION
2 - INTER WELD NUTS (4)
3 - ISO DOOR
4 - TEATHER STRAP TO OPEN MID & REAR DOORS

COWL TRIM

REMOVAL

(1) Remove door sill plate.
(2) Disengage hidden clips holding cowl trim to cowl panel (Fig. 13).
(3) Remove cowl trim from vehicle.

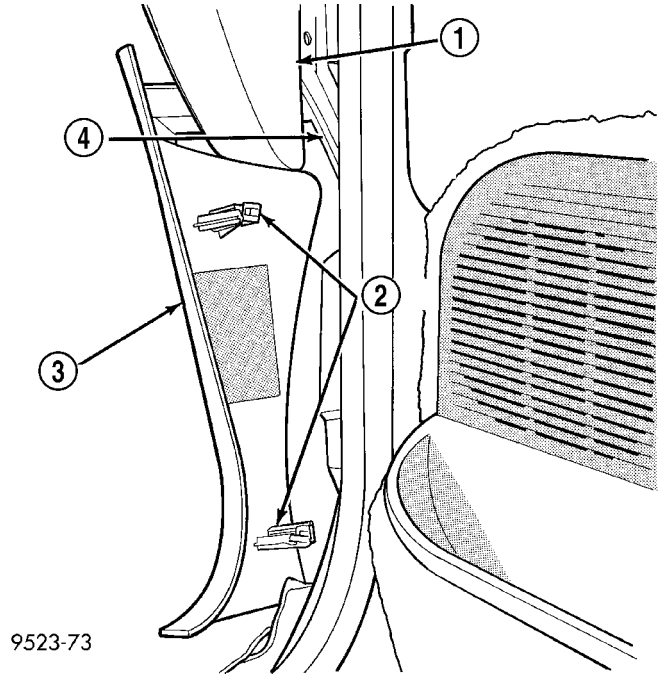

Fig. 13 COWL TRIM

1 - INSTRUMENT PANEL
2 - CLIPS
3 - COWL TRIM
4 - COWL

INSTALLATION

(1) Place cowl trim panel in position on vehicle (Fig. 1).
(2) Engage hidden clips attaching cowl trim to cowl panel.
(3) Install door sill plate.

C-PILLAR TRIM

REMOVAL

(1) Remove quarter trim panel.
(2) Remove seat belt turning loop from height adjuster.
(3) Remove screw attaching C-pillar trim panel to C-pillar (Fig. 14).
(4) Disengage hidden clips attaching trim to upper C-pillar.
(5) Remove upper C-pillar trim from vehicle.

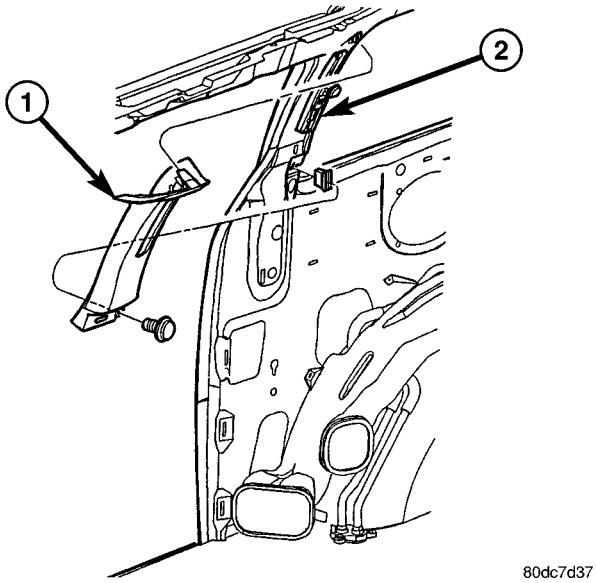

Fig. 14 C-PILLAR

1 - C-PILLAR TRIM PANEL
2 - C-PILLAR

INSTALLATION

(1) Place upper C-pillar trim in position on vehicle (Fig. 14).
(2) Engage hidden clips attaching trim to upper C-pillar.
(3) Install screw attaching C-pillar trim panel to C-pillar.
(4) Install seat belt turning loop onto height adjuster. Tighten all seat belt bolts to 39 N·m (29 ft. lbs.) torque.
(5) Install quarter trim panel.

DOOR SILL TRIM PLATE

REMOVAL

(1) Using trim stick (C-4755), disengage hidden clips holding door sill plate from door sill.

(2) Remove sill plate from vehicle (Fig. 15).

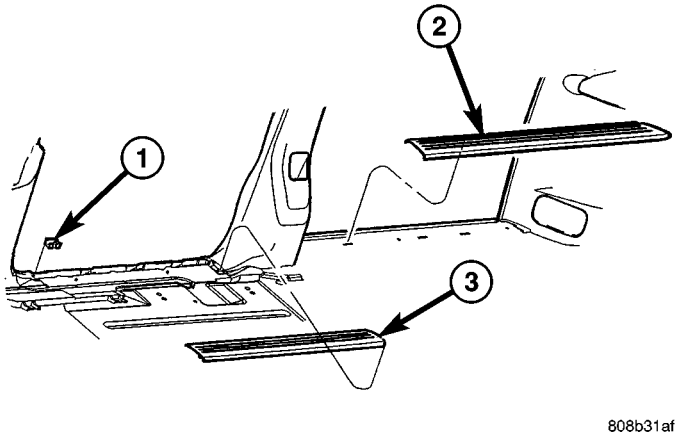

Fig. 15 DOOR SILL PLATE

1 - CLIPS
2 - SLIDING DOOR SILL TRIM PLATE
3 - FRONT DOOR SILL TRIM PLATE

INSTALLATION

(1) Place sill plate in position on vehicle (Fig. 15).

(2) Align interlock tabs at front and rear to mating trim.

(3) Engage hidden clips to hold door sill plate to door sill.

FLOOR CONSOLE BASE TRAY

REMOVAL

(1) Remove the floor carpet. (Refer to 23 - BODY/ INTERIOR/CARPETS AND FLOOR MATS - REMOVAL)

(2) Disconnect the electrical connector.

(3) Remove the four screws and remove the base tray.

INSTALLATION

(1) Place the base tray into position and connect the wire connector.

(2) Install the four screws attaching base tray.

(3) Install the floor console.

FLOOR CONSOLE - FOLD-IN-FLOOR

REMOVAL

(1) Open floor console door and storage bin can be lifted out of the console (Fig. 16).

(2) The floor console inner mat is just laying in the bottom of the console. It can be removed by pulling the mat upwards and out.

(3) The power outlet cover is snap into the console. It can be removed by pulling upward on the inner edge of the power cover to release it.

(4) The cell phone holder can be removed by compressing the two legs towards each other and removing phone holder from the console housing (Fig. 17).

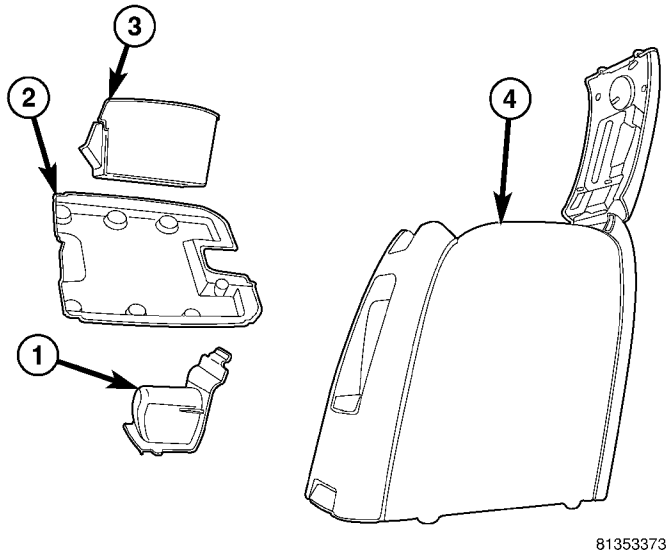

Fig. 16 FLOOR CONSOLE

1 - POWER OUTLET COVER
2 - FLOOR CONSOLE INNER MAT
3 - STORAGE BIN
4 - FLOOR CONSOLE

INSTALLATION

(1) Compress the legs on the cell phone holder and place into position (Fig. 17).

(2) Place power outlet cover into position and snap into position.

(3) Set mat into console housing and lay into position.

(4) Set storage bin into console housing and close door. (Fig. 16).

FLOOR CONSOLE - FOLD-IN-FLOOR (Continued)

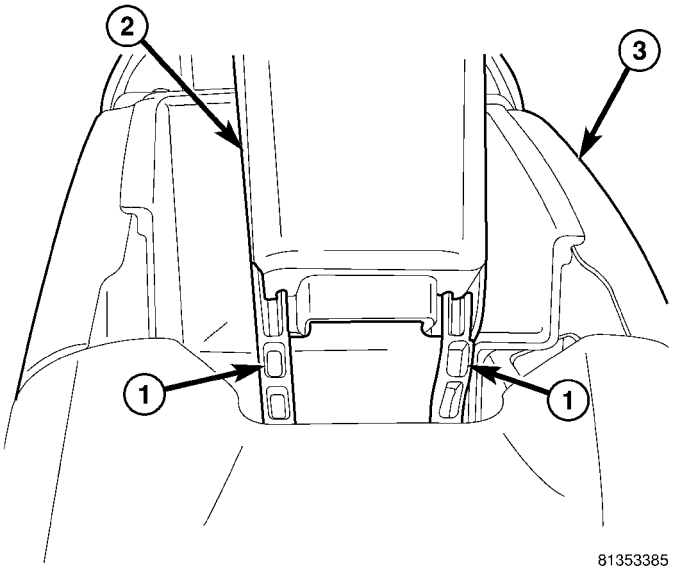

Fig. 17 CELL PHONE HOLDER

1 - COMPRESS LEGS TO RELEASE
2 - CELL PHONE HOLDER
3 - FLOOR CONSOLE

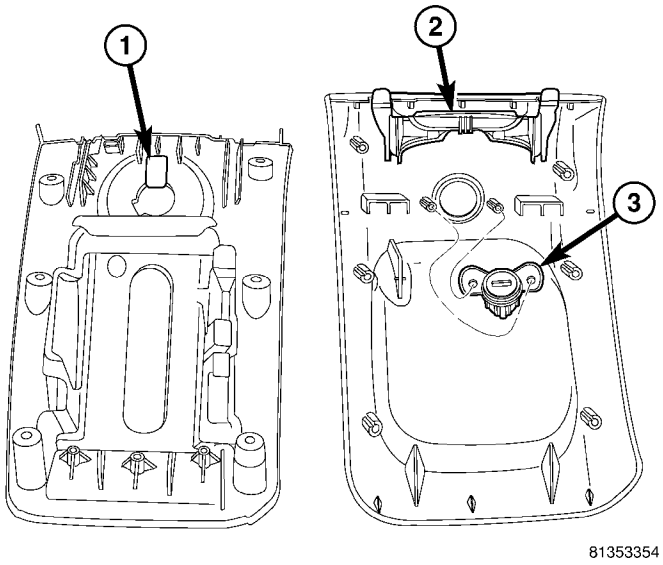

Fig. 18 DOOR LATCH

1 - LOCK LATCH
2 - CONSOLE DOOR RELEASE HANDLE
3 - LOCK CYLINDER

FLOOR CONSOLE KEY LOCK TUMBLER - FOLD-IN-FLOOR

REMOVAL

(1) The key lock tumbler may be removed by depressing the tab on the lock cylinder with a stiff wire, to release the lock tumbler.

(2) Pull key and lock tumbler from the lock cylinder.

INSTALLATION

(1) Place lock tumbler and key into the lock cylinder and push tumbler in until it lock into position.

FLOOR CONSOLE LID LATCH - FOLD-IN-FLOOR

REMOVAL

(1) Open floor console door and remove the three screws attaching door to the hinge.

(2) Remove the six screws attaching inner door panel, and separate inner panel from outer (Fig. 18).

(3) Remove two screws attaching lock cylinder to door, and remove lock cylinder.

(4) Remove lock latch and handle as necessary (Fig. 19).

INSTALLATION

(1) Place lock latch and door release handle into position (Fig. 19).

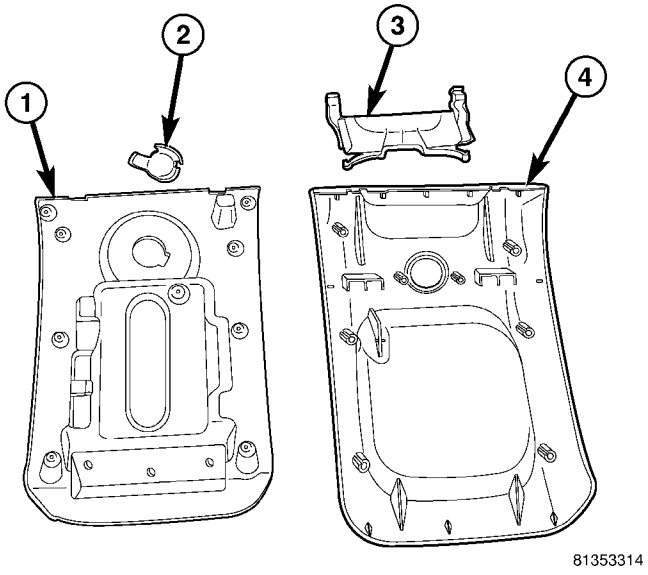

Fig. 19 FLOOR CONSOLE DOOR

1 - INNER DOOR PANEL
2 - LOCK LATCH
3 - CONSOLE DOOR RELEASE HANDLE
4 - OUTER DOOR PANEL

(2) Place lock cylinder into position. Install two screws attaching lock cylinder (Fig. 18).

(3) Place the inner and outer door panels together. Install six screws attaching door panels.

(4) Place door panel into position, and install the three screws attaching door to the hinge.

HEADLINER

REMOVAL

(1) Remove sun visors and vanity mirrors.
(2) Remove sun visor center supports.
(3) If equipped, remove coat hooks.
(4) If equipped, remove roof rail modules.
(5) Remove A-pillar trim covers. (Refer to 23 - BODY/INTERIOR/A-PILLAR TRIM - REMOVAL).
(6) Remove B-pillar upper trim covers (Fig. 20). (Refer to 23 - BODY/INTERIOR/B-PILLAR UPPER TRIM - REMOVAL).
(7) Remove C-pillar upper trim covers (Fig. 21). (Refer to 23 - BODY/INTERIOR/C-PILLAR TRIM - REMOVAL).

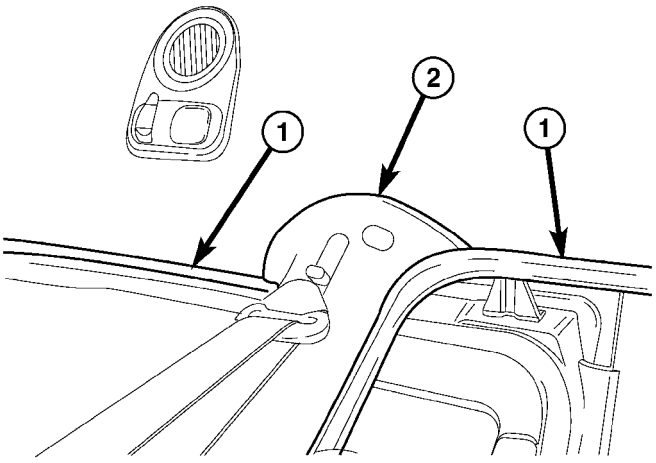

8134a9c9

Fig. 20 HEADLINER AT B-PILLAR

1 - FRONT AND SLIDING DOOR WEATHERSTRIP SEAL
2 - B-PILLAR UPPER TRIM PANEL

(8) Remove D-pillar trim covers. (Refer to 23 - BODY/INTERIOR/RIGHT D-PILLAR TRIM PANEL - REMOVAL) and (Refer to 23 - BODY/INTERIOR/ LEFT D-PILLAR TRIM PANEL - REMOVAL).
(9) Remove liftgate opening header trim.
(10) If equipped, remove overhead console screws.
(11) If equipped, reading lamps.
(12) Remove dome lamp.
(13) Remove push in locking fasteners attaching headlining to rear roof header and roof bows (Fig. 22).

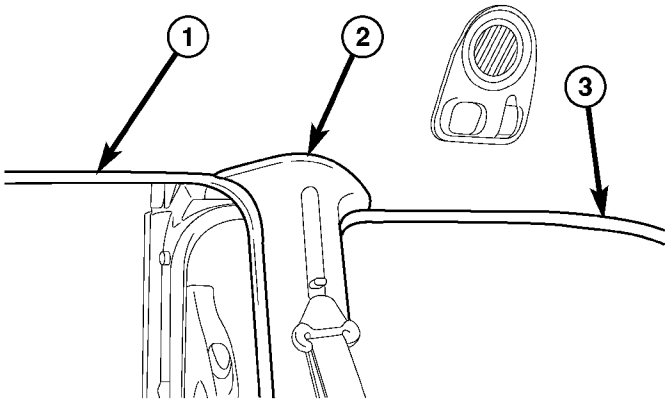

8134a9d8

Fig. 21 HEADLINER AT C-PILLAR

1 - SLIDING DOOR WEATHERSTRIP
2 - C-PILLAR UPPER TRIM PANEL
3 - REAR QUARTER WINDOW OPENING WEATHERSTRIP

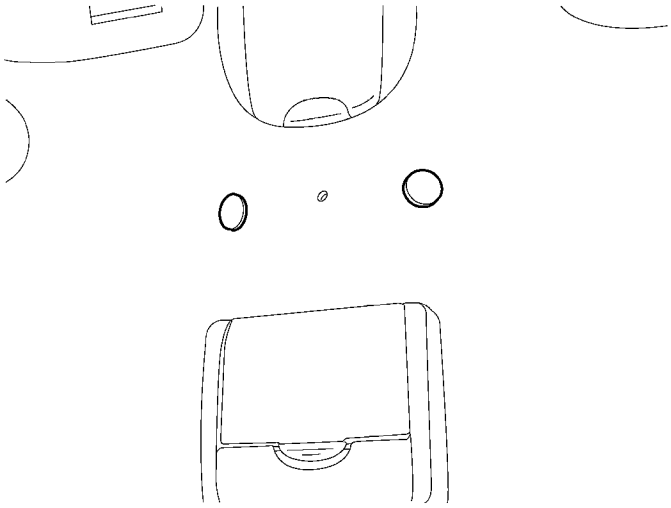

8134a9bd

Fig. 22 HEADLINER PUSH PINS

(14) Remove wiring connections.
(15) Remove headlining from roof (Fig. 23), (Fig. 24), (Fig. 25), and (Fig. 26).
(16) Extract headlining through liftgate opening.

HEADLINER (Continued)

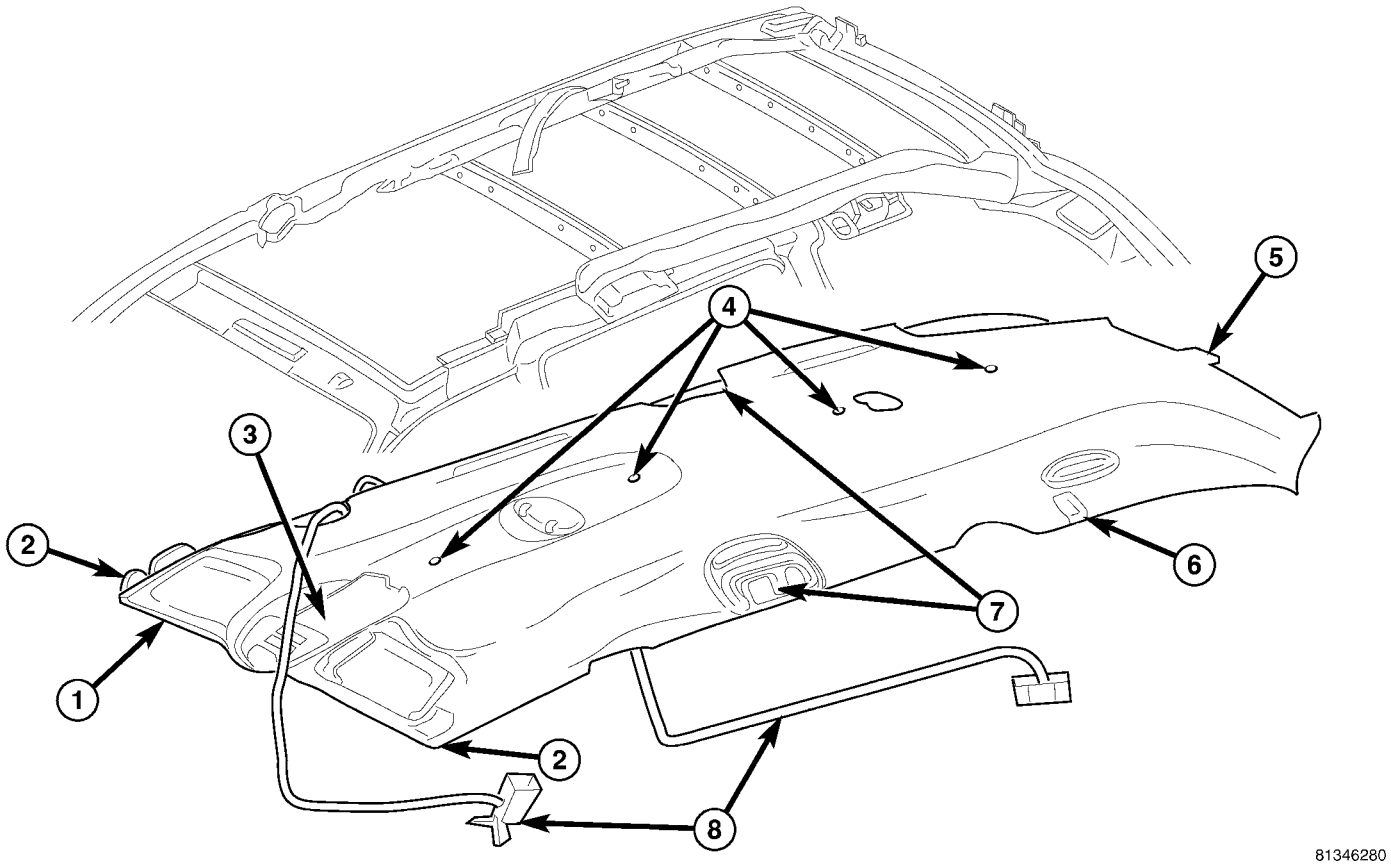

Fig. 23 HEADLINER WITH SIDE CURTAINS

1 - 4-WAY LOCATOR AT FRONT OF HEADLINER
2 - PUSH IN CLIPS ON SUN VISOR RETAINER RACKET AND TWO SCREWS IN SUN VISOR SWIVEL BRACKET
3 - ONE SCREW IN OVER HEAD CONSOLE
4 - PUSH PINS ATTACHING HEADLINER TO OVERHEAD
5 - 2 WAY LOCATOR AT REAR OF HEADLINER
6 - COAT HANGER HOOKS
7 - 2-WAY LOCATORS
8 - WIRE HARNESS

INSTALLATION

(1) Insert headlining through liftgate opening (Fig. 23), (Fig. 24), (Fig. 25), and (Fig. 26).
(2) Place headlining in position on roof.
(3) Connect wire connectors.
(4) Install left sun visor support.
(5) Install push in locking fasteners attaching headlining to rear roof header and bows (Fig. 22).
(6) Install right sun visor support.
(7) Install sun visors and vanity mirrors.
(8) If equipped, install roof rail modules.
(9) If equipped, install coat hooks.
(10) Install dome lamp.
(11) If equipped, install reading lamp.
(12) If equipped, install overhead console.
(13) Install liftgate opening header trim.
(14) Install D-pillar trim covers. (Refer to 23 - BODY/INTERIOR/LEFT D-PILLAR TRIM PANEL - INSTALLATION), and (Refer to 23 - BODY/INTERIOR/RIGHT D-PILLAR TRIM PANEL - INSTALLATION).
(15) Install C-pillar upper trim covers. (Refer to 23 - BODY/INTERIOR/C-PILLAR TRIM - INSTALLATION).
(16) Install B-pillar upper trim covers. (Refer to 23 - BODY/INTERIOR/B-PILLAR UPPER TRIM - INSTALLATION).
(17) Install A-pillar trim covers. (Refer to 23 - BODY/INTERIOR/A-PILLAR TRIM - INSTALLATION).

HEADLINER (Continued)

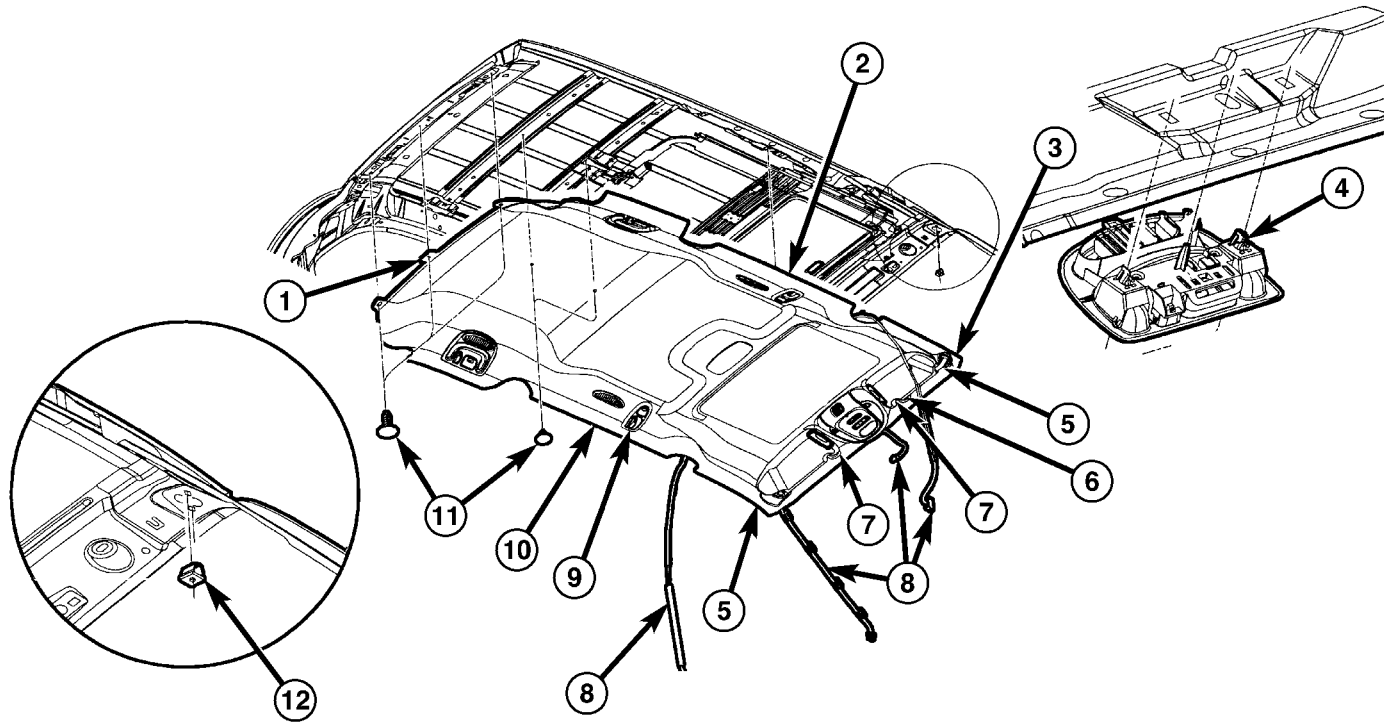

813462ee

Fig. 24 HEADLINER WITH SIDE AIR CURTAINS AND SUNROOF

1 - 2-WAY LOCATOR AT FRONT OF HEADLINER
2 - LIP OUT WEATHERSTRIP ONTO HEADLINER
3 - HEADLINER
4 - 2-WAY LOCATOR PIN
5 - PUSH IN CLIP AND TWO SCREWS ATTACHING SUN VISOR SWIVEL BRACKET
6 - 4-WAY LOCATOR PINS
7 - PUSH ON CLIPS ON SUN VISOR CENTER SUPPORTS
8 - WIRE HARNESS
9 - COAT HANGER HOOK
10 - 2-WAY LOCATOR
11 - PUSH PIN FASTENERS
12 - PLASTIC NUT

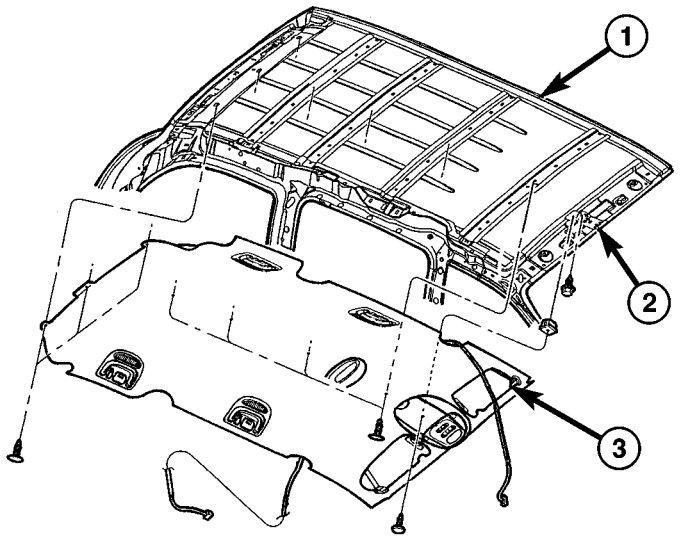

808b39a9

Fig. 25 HEADLINING

1 - ROOF
2 - OVERHEAD CONSOLE BRACKET
3 - HEADLINING ASSEMBLY

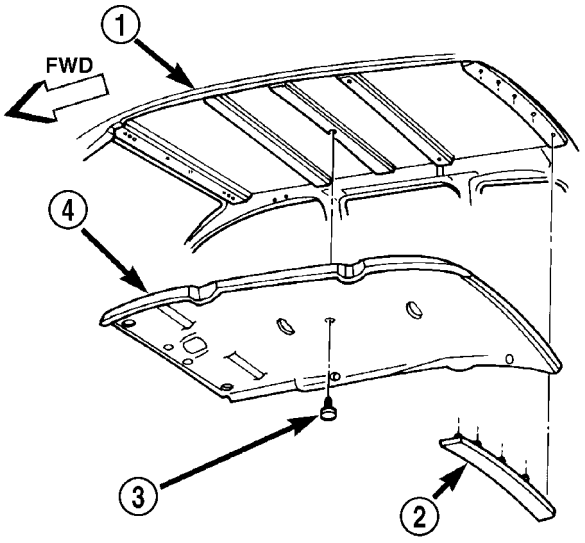

80b0d6f9

Fig. 26 HEADLINING - SWB

1 - ROOF
2 - REAR HEADER TRIM
3 - PUSH-IN FASTENER
4 - HEADLINING

LEFT D-PILLAR TRIM PANEL

REMOVAL

(1) Remove rear header trim cover.
(2) Remove liftgate sill plate.
(3) Remove second row seat belt turning loop on long wheel base vehicle.
(4) Remove bolt attaching second row seat belt lower anchor to quarter on short wheel base vehicle.
(5) Disengage hidden clips attaching trim to D-pillar.
(6) Disconnect speaker wire connector, if equipped.
(7) Pass seat belt through slot in D-pillar trim panel on short wheel base vehicle.
(8) Remove D-pillar trim from vehicle.

INSTALLATION

(1) Pass seat belt through slot in D-pillar trim panel on short wheel base vehicle.
(2) Position D-pillar trim panel on vehicle.
(3) Connect speaker wire connector to speaker, if equipped.
(4) Align locating pins on backside of trim panel to mating holes in inner quarter panel.
(5) Engage hidden clips attaching trim to D-pillar.
(6) Install bolt attaching second row seat belt lower anchor to quarter on short wheel base vehicle. Tighten all seat belt bolts to 39 N·m (29 ft. lbs.).
(7) Install second row seat belt turning loop on long wheel base vehicle.
(8) Install liftgate sill plate.
(9) Install rear header trim cover.

LEFT QUARTER TRIM PANEL

REMOVAL

CAUTION: Disconnect the negative cable clamp from battery post. Damage to accessory feed circuit can result.

(1) Remove first row seat.
(2) Remove second row seat, if equipped.
(3) Remove front door sill plate on three door vehicle.
(4) Remove sliding door sill plate on four door vehicle.
(5) Remove left quarter trim bolster.
(6) Remove C-pillar trim panel.
(7) Remove left D-pillar trim panel.
(8) Remove first row seat belt anchor.
(9) Remove second row seat belt anchor on long wheel base vehicle.
(10) Remove screws attaching quarter trim to quarter panel from bolster area.
(11) Remove screws attaching rear edge of quarter trim to attaching bracket or inner quarter trim panel.
(12) Disconnect wire connector from accessory power outlet, if equipped.
(13) Remove quarter trim from quarter panel.
(14) Pass front seat belt and turning loop through slot in quarter trim panel on three door vehicle.
(15) Pass first row seat belt through slot in quarter trim panel.
(16) Pass second row seat belt, if equipped, through slot in quarter trim panel on long wheel base vehicle.
(17) Remove quarter trim panel from vehicle.

INSTALLATION

(1) Position quarter trim panel on vehicle.
(2) Pass second row seat belt, if equipped, through slot in quarter trim panel on long wheel base vehicle.
(3) Pass first row seat belt through slot in quarter trim panel.
(4) Connect wire connector into accessory power outlet, if equipped.
(5) Align locating pins on backside of trim panel to mating holes in inner panels.
(6) Position quarter trim panel on inner quarter panel.
(7) Install screws attaching rear edge of quarter trim to attaching bracket or inner quarter panel.
(8) Install screws attaching quarter trim to inner quarter panel in bolster area.
(9) Install second row seat belts anchor on long wheel base vehicle. Tighten all seat belt bolts to 39 N·m (29 in. lbs.) torque.
(10) Install first row seat belt anchor.
(11) Install left D-pillar trim panel.
(12) Install C-pillar trim panel.
(13) Install upper left B-pillar trim on three door vehicle.
(14) Install left quarter trim bolster.
(15) Install front door sill plate on three door vehicle.
(16) Install sliding door sill plate on four door vehicle.
(17) Install second row seat, if equipped.
(18) Install first row seat.
(19) Connect the battery negative cable.

LIFTGATE SILL PLATE

REMOVAL

(1) Disengage hidden clips holding sill plate to liftgate door opening sill (Fig. 27).
(2) Remove sill plate from vehicle.

LIFTGATE SILL PLATE (Continued)

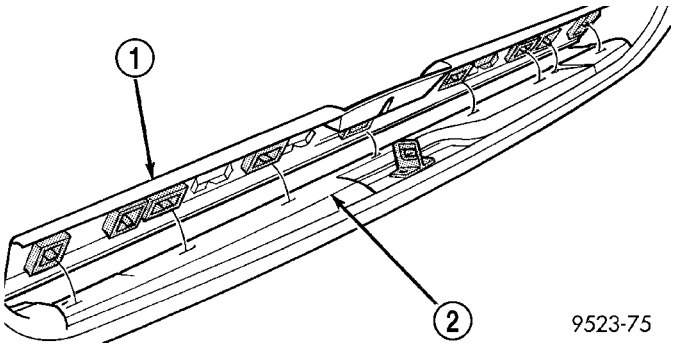

Fig. 27 LIFTGATE SILL PLATE

1 - LIFTGATE SILL PLATE
2 - LIFTGATE SILL

INSTALLATION

(1) Place sill plate in position on vehicle.
(2) Align engage hook tabs at end of liftgate sill plate to D-pillar trim.
(3) Engage hidden clips to hold sill plate to liftgate door opening sill.

QUARTER TRIM BOLSTER

REMOVAL

The speaker grille in the quarter trim panel is not removable. The trim panel must be removed to service the speaker.
(1) Disengage hidden clips attaching trim bolster to quarter trim panel.
(2) Remove quarter trim panel from vehicle.

INSTALLATION

The speaker grille in the quarter trim bolster is not removable. The trim bolster must removed to service the speaker.
(1) Place quarter trim bolster in position on vehicle.
(2) Engage hook retainer attaching front of trim bolster to quarter trim panel, if applicable.
(3) Engage hidden clips attaching trim bolster to quarter trim panel.

REAR FLOOR TUB CARPETS INSERT - FOLD-IN-FLOOR

REMOVAL

(1) Open liftgate.
(2) Remove liftgate sill plate. (Refer to 23 - BODY/ INTERIOR/LIFTGATE SILL PLATE - REMOVAL).
(3) Fold third row seats in to floor well.
(4) Using a trim stick, unclip anchor molding (Fig. 28).
(5) Remove two screws attaching front edge of floor tub carpet.

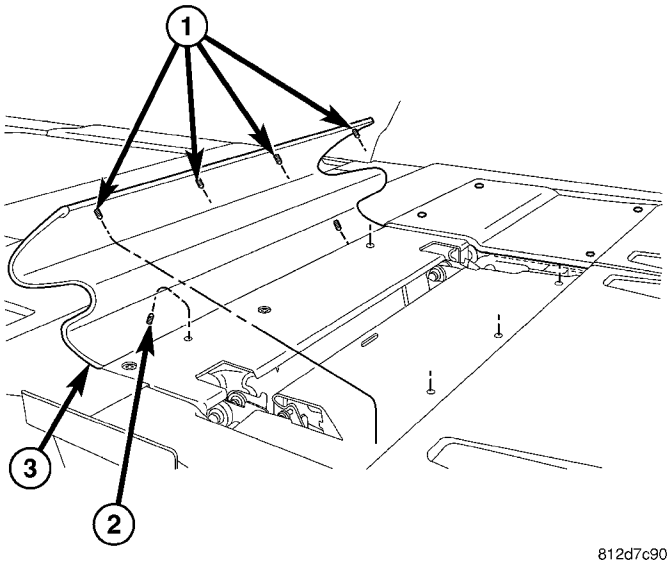

Fig. 28 ANCHOR MOLDING

1 - 2-WAY CLIPS INTO SEAT FRAME
2 - 4-WAY LOCATING PINS (2)
3 - FRONT SEAT ANCHOR MOLDING

(6) Fold seat back into the upright position.
(7) Remove nuts attaching third row seat lower trim cover (Fig. 29)
(8) Lift rear tub carpet insert out of floor well (Fig. 30).
(9) Remove tub insert from vehicle

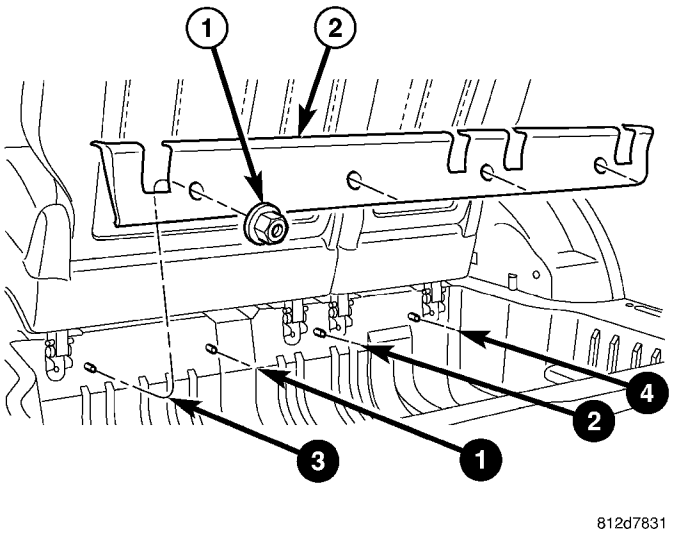

Fig. 29 REAR SEAT TRIM COVER

1 - PLASTIC NUTS ON WELD STUDS
2 - LOWER TRIM COVER

REAR FLOOR TUB CARPETS INSERT - FOLD-IN-FLOOR (Continued)

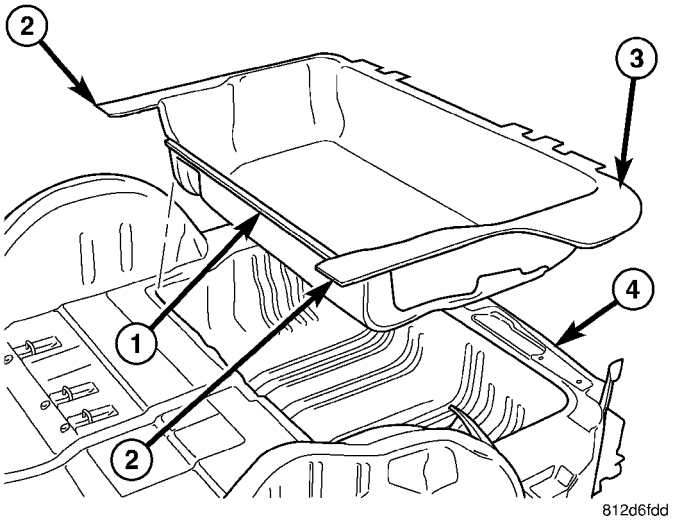

Fig. 30 REAR FLOOR TUB CARPET INSERT

1 - REAR TUB
2- TAB ON SIDE OF CARPET IN WHEELHOUSE AREA
3 - REAR TUB CARPET
4 - LOAD THROUGH LIFTGATE OPENING

INSTALLATION

(1) Place rear tub carpet insert into position on weld studs (Fig. 30).

(2) Slip carpet edges under quarter trim panel.

(3) Install nuts attaching third row seat lower trim cover (Fig. 29). Follow the tightening sequence.

(4) Fold third row seats in to floor well.

(5) Install two screws attaching front edge of floor tub carpet.

(6) Place anchor molding into position push on clips to lock (Fig. 28).

(7) Remove liftgate sill plate. (Refer to 23 - BODY/ INTERIOR/LIFTGATE SILL PLATE - INSTALLATION).

(8) Close liftgate.

REAR HEADER TRIM

REMOVAL

(1) Disengage hidden clips holding trim to rear header (Fig. 31).

(2) Separate rear header trim from vehicle.

INSTALLATION

(1) Place rear header trim in position on vehicle.

(2) Align guide pins on trim to holes in header.

(3) Engage hidden clips to hold trim to rear header.

(4) Engage interlock tabs at D-pillar trim.

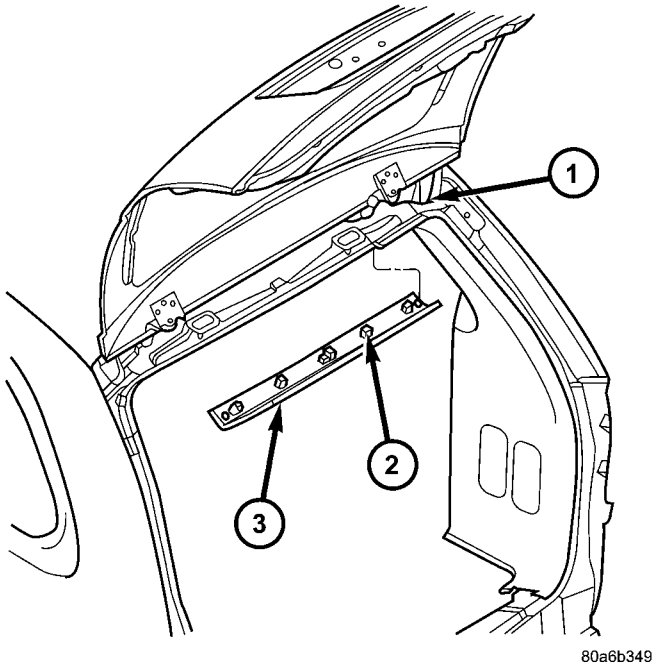

Fig. 31 REAR HEADER TRIM

1 - REAR HEADER
2 - GUIDE PINS
3 - CLIPS

REAR HVAC LOUVER

REMOVAL

(1) Using a trim stick (C-4755), pry edge of louver from bezel.

(2) Remove HVAC louver from bezel.

(3) Using a trim stick, pry lower edge of HVAC bezel away from headlining (Fig. 32).

(4) Remove louver from vehicle.

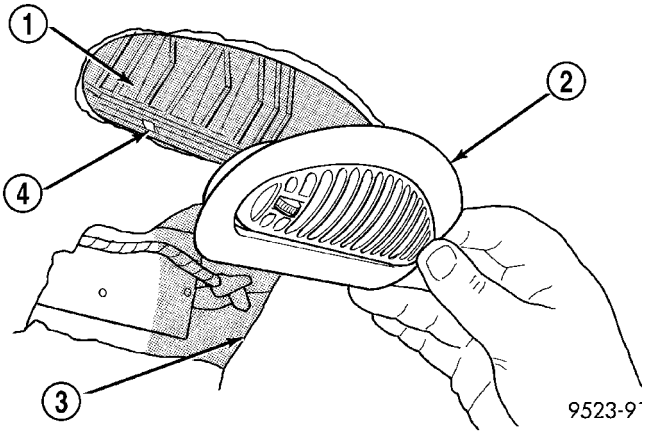

Fig. 32 REAR HVAC LOUVER

1 - HEVAC DUCT
2 - REAR HEVAC LOUVER
3 - HEADLINING
4 - CLIP

REAR HVAC LOUVER (Continued)

INSTALLATION

(1) Place bezel in position in HVAC duct opening.
(2) Push inward on bezel until clips snap in place. Verify that all four clips have been engaged to the bezel and that the bezel is flush to the headlining
(3) Position HVAC louver to bezel.
(4) Snap both ends of the louver into HVAC bezel.

RIGHT QUARTER TRIM PANEL

REMOVAL

CAUTION: Disconnect the battery negative cable. Damage to accessory feed circuit can result.

(1) Remove first row seat.
(2) Remove second row seat.
(3) Remove sliding door sill trim panel.
(4) Remove quarter trim bolster.
(5) Remove D-pillar trim panel.
(6) Remove first row seat belt anchor.
(7) Remove second row seat belt anchor.
(8) Remove screws attaching quarter trim to quarter panel from bolster area.
(9) Remove screws attaching rear edge of quarter trim to attaching bracket.
(10) Disengage hidden clips attaching front of quarter trim to quarter panel rearward of sliding door opening and at locators.
(11) Remove quarter trim from quarter panel.
(12) Disconnect speaker wire connector on LWB quarter trim panel with rear air conditioning.
(13) Pass second row seat belt through slot in trim panel on long wheel base vehicle.
(14) Pass first row seat belt through slot in trim panel.
(15) Remove quarter trim panel from vehicle.

INSTALLATION

(1) Position quarter trim panel on vehicle.
(2) Pass first row seat belt through slot in trim panel.
(3) Pass second row seat belt through access hole in trim panel on long wheel base vehicle.
(4) Connect wire connector into speaker on LWB with rear air conditioning.
(5) Align locating pins on backside of trim panel to mating holes in inner quarter panel.
(6) Engage hidden clips attaching front of quarter trim to quarter panel rearward of sliding door opening and at locators.
(7) Install screws attaching rear edge of quarter trim to attaching bracket.
(8) Install screws attaching quarter trim to inner quarter panel in bolster area.
(9) Install second row seat belt anchor on long wheel base vehicle. Tighten all seat belt bolts to 39 N·m (29 ft. lbs.) torque.
(10) Install first row seat belt anchor.
(11) Install D-pillar trim panel.
(12) Install C-pillar trim panel.
(13) Install quarter trim bolster.
(14) Install sliding door sill trim panel.
(15) Install second row seat, if equipped.
(16) Install first row seat.
(17) Connect the battery negative cable.

REAR VIEW MIRROR

REMOVAL

(1) If equipped, disconnect mirror harness connector (Fig. 33).
(2) Loosen the mirror base set screw (Fig. 34).
(3) Slide the mirror base upward and off the bracket.

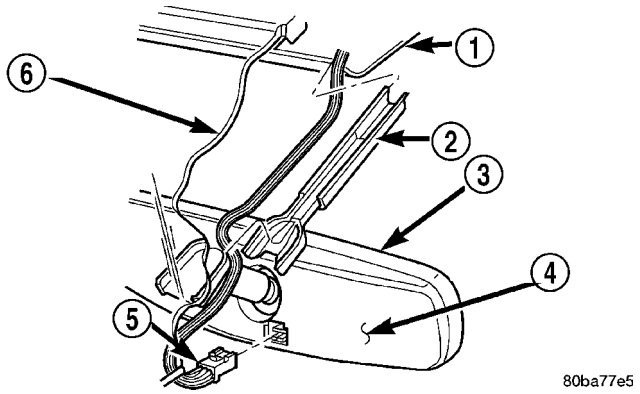

Fig. 33 REAR VIEW MIRROR ASSEMBLY

1 - HEADLINER
2 - WIRE COVER
3 - MIRROR
4 - MIRROR ASSEMBLY
5 - WIRE CONNECTOR
6 - WINDSHIELD

INSTALLATION

(1) Position the mirror base at the bracket and slide it downward onto the support bracket.
(2) Tighten the setscrew 1 N·m (15 in. lbs.) torque.
(3) If equipped, connect mirror harness connector.

RIGHT D-PILLAR TRIM PANEL

REMOVAL

(1) Remove rear header trim cover.
(2) Remove liftgate sill plate.
(3) Remove second row seat belt turning loop on long wheel base vehicle.

RIGHT D-PILLAR TRIM PANEL (Continued)

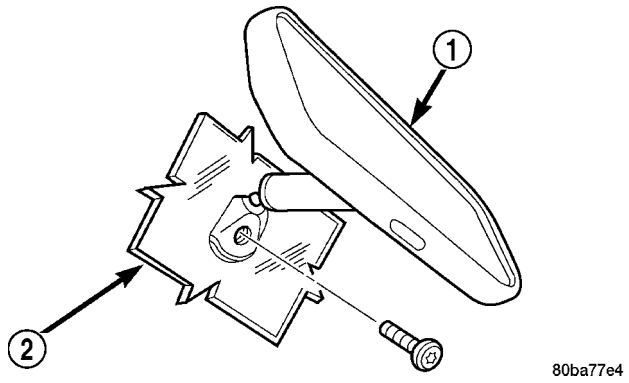

Fig. 34 REAR VIEW MIRROR

1 - MIRROR
2 - WINDSHIELD

(4) Remove bolt attaching second row seat belt, anchor to quarter on short wheel base vehicle.
(5) Disengage hidden clips attaching trim to D-pillar.
(6) Remove D-pillar trim panel from D-pillar.
(7) Disconnect speaker wire connector, if equipped.
(8) Pass second row seat belt, if equipped, through slot in trim panel on short wheel base vehicle.
(9) Remove D-pillar trim from vehicle.

INSTALLATION

(1) Position D-pillar trim on vehicle.
(2) Pass second row seat belt, if equipped, through slot in trim panel on short wheel base vehicle.
(3) Connect speaker wire connector to speaker, if equipped.
(4) Align locating pins on backside of trim panel to mating holes in D-pillar.
(5) Engage hidden clips attaching trim to D-pillar.
(6) Install screws attaching trim panel to attaching bracket on short wheel base vehicle.
(7) Install quarter trim bolster on short wheel base vehicle.
(8) Install bolt to attach second row seat belt, if equipped, anchor to quarter on short wheel base vehicle. Tighten all seat belt bolts to 39 N·m (29 ft. lbs.) torque.
(9) Install second row seat belt turning loop on long wheel base vehicle.
(10) Install liftgate sill plate.
(11) Install rear header trim cover.

SECOND ROW FLOOR TUB CARPET INSERT - FOLD-IN-FLOOR

REMOVAL

(1) Move both front seats to the full forward position.
(2) Fold second row seats into the floor well.
(3) Remove rear carpet ring and cover from vehicle. (Refer to 23 - BODY/INTERIOR/REAR CARPET RING AND COVER ASSEMBLY - REMOVAL).
(4) Remove second row seat from vehicle. Repeat operation for other side, if necessary.
(5) Remove second row floor tub insert(s) from vehicle (Fig. 35).

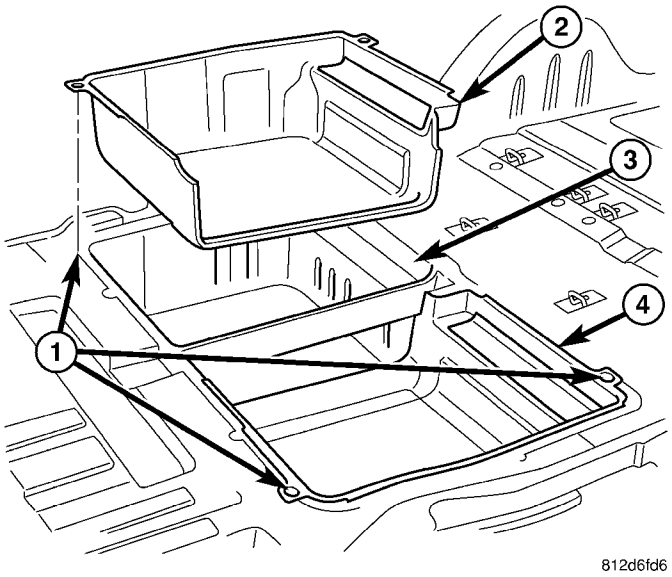

Fig. 35 SECOND ROW FLOOR TUB INSERT

1 - WELD STUDS
2 - RIGHT TUB INSERT
3 - SECOND ROW SEAT TUB
4 - LEFT TUB INSERT

INSTALLATION

(1) Place second row floor tub insert(s) into position (Fig. 35).
(2) Place seat(s) into position and install seat. (Refer to 23 - BODY/SEATS/SEAT - INSTALLATION). Repeat operation for other side, if necessary.
(3) Install rear carpet ring and cover position. (Refer to 23 - BODY/INTERIOR/REAR CARPET RING AND COVER - INSTALLATION).
(4) Open second row seats into the upright position.
(5) Move both front seats to the normal position.

SLIDING DOOR SILL PLATE

REMOVAL

(1) Disengage hidden clips holding sill plate to sliding door opening sill.
(2) Disengage hooks holding outside edge of sill plate to door sill (Fig. 36).
(3) Remove sill plate from vehicle.

SLIDING DOOR SILL PLATE (Continued)

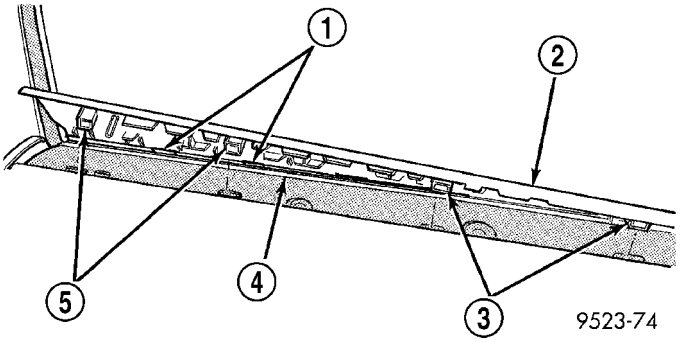

Fig. 36 SLIDING DOOR SILL PLATE

1 - HOOKS
2 - SILL PLATE
3 - CLIPS
4 - SLIDING DOOR SILL
5 - CLIPS

INSTALLATION

(1) Place sill plate in position on vehicle.
(2) Engage hooks to hold outside edge of sill plate to door sill.
(3) Align guide pins to holes in door sill.
(4) Engage hidden clips to hold sill plate to sliding door opening sill.
(5) Engage interlock tabs at lower B-pillar and quarter trim panel.

SUN VISOR

REMOVAL

All vehicles with driver and passenger side air bags must have a colored coded five Bullet point air bag warning label applied to the sun visor, verify label availability and ensure the label is installed.
(1) Disengage sun visor from center support.
(2) Remove screws attaching sun visor to roof header (Fig. 37).
(3) Remove sun visor from roof.
(4) If equipped, disconnect illuminated vanity mirror wire connector from body harness.
(5) Remove sun visor from vehicle.

INSTALLATION

All vehicles with driver and passenger side air bags must have a colored coded five Bullet point air bag warning label applied to the sun visor, verify label availability and ensure the label is installed.
(1) Place sun visor in position on vehicle.
(2) Connect illuminated vanity mirror wire connector into body harness.
(3) Place sun visor in position on roof.
(4) Install screws to hold sun visor to roof header (Fig. 37).
(5) Engage sun visor into center support.

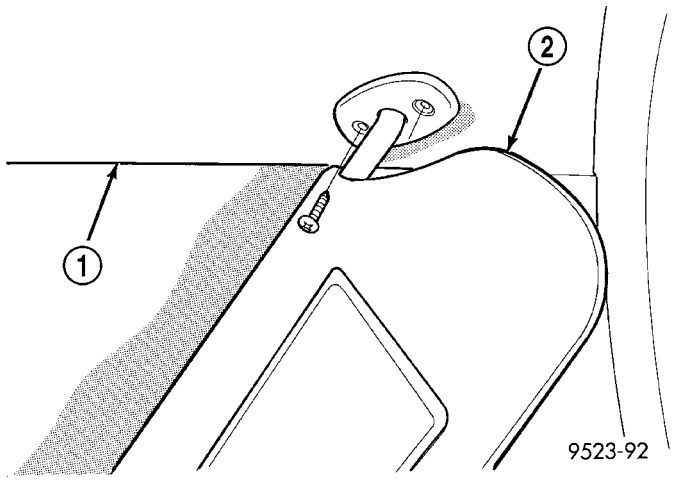

Fig. 37 SUN VISOR

1 - HEADLINING
2 - SUN VISOR

SUN VISOR SUPPORT

REMOVAL

(1) Disengage sun visor from support.
(2) Remove screw holding support to roof header (Fig. 38).
(3) Remove sun visor support from vehicle.

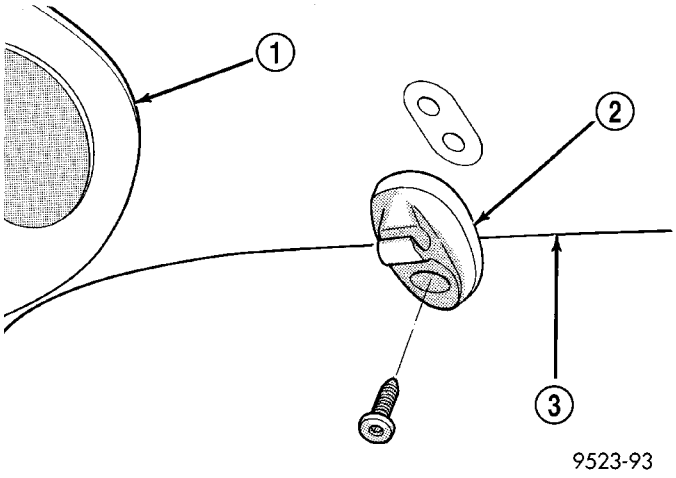

Fig. 38 SUN VISOR SUPPORT

1 - OVERHEAD CONSOLE
2 - SUN VISOR SUPPORT
3 - HEADLINING

INSTALLATION

(1) Place sun visor support in position on vehicle.
(2) Install screw holding support to roof header (Fig. 38).
(3) Engage sun visor into support.

PAINT

TABLE OF CONTENTS

	page		page
PAINT		**PAINTED TOUCH-UP**	
SPECIFICATIONS - COLOR CODE CHARTS	100	DESCRIPTION	101
BASE COAT/CLEARCOAT FINISH		**FINESSE SANDING/BUFFING & POLISHING**	
DESCRIPTION	101	DESCRIPTION	101
PAINT CODE			
DESCRIPTION	101		

PAINT

SPECIFICATIONS - COLOR CODE CHARTS

EXTERIOR COLORS

EXTERIOR COLOR	DAIMLERCHRYSLER COLOR CODE	EXTERIOR COLOR	DAIMLERCHRYSLER COLOR CODE
BRIGHT SILVER METALLIC CLEAR COAT	WS2	LIGHT KHAKI METALLIC CLEAR COAT	AJC
BRILLIANT BLACK CRYSTAL PEARL COAT	AXR	LINEN GOLD PEARL COAT	CYG
BUTANE BLUE METALLIC CLEAR COAT	ABE	MAGNESIUM PEARL COAT	BPK
DARK KHAKI METALLIC CLEAR COAT	BJT	MIDNIGHT BLUE PEARL COAT	BB8
DEEP BERYL GREEN PEARL COAT	CGV	PATRIOT BLUE PEARL COAT	WB7
DEEP LAVA RED PEARL COAT	ZMQ	SATIN JADE PEARL COAT	AP4
DEEP MOLTEN RED PEARL COAT	BR8	SHALE GREEN METALLIC CLEAR COAT	WS2
GRAPHITE METALLIC CLEAR COAT	ZDR	STONE WHITE CLEAR COAT	SW1
INFERNO RED TINTED PEARL COAT	WEL		

PAINT (Continued)

INTERIOR COLORS

INTERIOR COLOR	DAIMLERCHRYSLER COLOR CODE	INTERIOR COLOR	DAIMLERCHRYSLER COLOR CODE
DARK KHAKI/LIGHT GRAYSTONE	J1	MEDIUM SLATE GRAY	D5
KHAKI	J3		

BASE COAT/CLEARCOAT FINISH

DESCRIPTION

On most vehicles a two-part paint application (basecoat/clearcoat) is used. Color paint that is applied to primer is called basecoat. The clearcoat protects the basecoat from ultraviolet light and provides a durable high-gloss finish.

CAUTION: Do not use abrasive chemicals or compounds on painted surfaces. Damage to finish can result.
Do not use harsh alkaline based cleaning solvents on painted surfaces. Damage to finish or color can result.

PAINT CODE

DESCRIPTION

Exterior vehicle body colors are identified on the Body Code plate. (Refer to VEHICLE DATA/VEHICLE INFORMATION/BODY CODE PLATE - DESCRIPTION). The paint code is also identified on the Vehicle Safety Certification Label which is located on the drivers door shut face. The first digit of the paint code listed on the vehicle indicates the sequence of application, i.e.: P = primary coat, Q = secondary coat. The codes listed in the Color Code Chart are used for manufacturing purposes.

PAINTED TOUCH-UP

DESCRIPTION

When a painted metal surface has been scratched or chipped, it should be touched up as soon as possible to avoid corrosion. For best results, use Mopar® Scratch Filler/Primer, Touch Up Paints and Clear Top Coat. (Refer to VEHICLE DATA/VEHICLE INFORMATION/BODY CODE PLATE - DESCRIPTION).

WARNING: USE AN OSHA APPROVED RESPIRATOR AND SAFETY GLASSES WHEN SPRAYING PAINT OR SOLVENTS IN A CONFINED AREA. PERSONAL INJURY CAN RESULT.

TOUCH UP PROCEDURE

(1) Scrape loose paint and corrosion from inside scratch or chip.

(2) Clean affected area with Mopar® Tar/Road Oil Remover, and allow to dry.

(3) Fill the inside of the scratch or chip with a coat of filler/primer. Do not overlap primer onto good surface finish. The applicator brush should be wet enough to puddle-fill the scratch or chip without running. Do not stroke brush applicator on body surface. Allow the filler/primer to dry hard.

(4) Cover the filler/primer with color touch up paint. Do not overlap touch up color onto the original color coat around the scratch or chip. Butt the new color to the original color, if possible. Do not stroke applicator brush on body surface. Allow touch up paint to dry hard.

(5) On vehicles without clearcoat, the touch up color can be lightly finesse sanded (1500 grit) and polished with rubbing compound.

(6) On vehicles with clearcoat, apply clear top coat to touch up paint with the same technique as described in Step 4. Allow clear top coat to dry hard. If desired, Step 5 can be performed on clear top coat.

WARNING: AVOID PROLONGED SKIN CONTACT WITH PETROLEUM OR ALCOHOL – BASED CLEANING SOLVENTS. PERSONAL INJURY CAN RESULT.

FINESSE SANDING/BUFFING & POLISHING

DESCRIPTION

Minor acid etching, orange peel, or smudging in clearcoat or single-stage finishes can be reduced with light finesse sanding, hand buffing, and polishing. **If the finish has been finesse sanded in the past, it cannot be repeated. Finesse sanding operation should be performed by a trained automotive paint technician.**

CAUTION: Do not remove clearcoat finish, if equipped. Basecoat paint must retain clearcoat for durability.

SEATS

TABLE OF CONTENTS

page

CHILD SEAT MODULE, BENCH SEAT
REMOVAL 104
INSTALLATION
INSTALLATION 105
SYNCHRONIZING CABLE ADJUSTMENT . . 105
QUAD CHILD SEAT
REMOVAL 106
INSTALLATION 106
HEADREST
REMOVAL 106
INSTALLATION 106
HEADREST SLEEVE
REMOVAL 107
INSTALLATION 107
RECLINER HANDLE
REMOVAL 108
INSTALLATION 108
ARMREST
REMOVAL 108
INSTALLATION 108
FRONT SEAT
REMOVAL 108
INSTALLATION 110
FRONT SEAT BACK
REMOVAL 111
INSTALLATION 111
FRONT SEAT BACK ASSIST STRAP
REMOVAL 112
INSTALLATION 112
FRONT SEAT BACK PANEL
REMOVAL 112
INSTALLATION 113
FRONT SEAT BACK COVER
REMOVAL 113
INSTALLATION 116
FRONT SEAT CUSHION
REMOVAL 117
INSTALLATION 118
FRONT SEAT CUSHION - OCS
REMOVAL 119
INSTALLATION 120
FRONT SEAT CUSHION SIDE COVER
REMOVAL 120
INSTALLATION 121
FRONT SEAT CUSHION SIDE COVER - OCS
REMOVAL 121
INSTALLATION 122
FRONT SEAT RISER - MANUAL - OCS
REMOVAL 123
INSTALLATION 123
FRONT SEAT TRACK POWER ADJUSTER
REMOVAL 124
INSTALLATION 124
FRONT SEAT TRACK ADJUSTER/POWER - OCS
REMOVAL 124
INSTALLATION 125
FRONT SEAT TRACK MANUAL ADJUSTER
REMOVAL 125
INSTALLATION 126
FRONT SEAT TRACK ADJUSTER/MANUAL - OCS
REMOVAL 126
INSTALLATION 128
FRONT SEAT TRACK - REAR COVER
REMOVAL 128
INSTALLATION 128
FRONT SEAT TRACK REAR COVER - OCS
REMOVAL 129
INSTALLATION 129
ARMREST - SECOND ROW - FOLD-IN-FLOOR
REMOVAL 130
INSTALLATION 130
ARMREST ROTATING ASSEMBLY - SECOND ROW - FOLD-IN-FLOOR
REMOVAL 130
INSTALLATION 130
HEADREST SLEEVE - SECOND ROW - FOLD-IN-FLOOR
REMOVAL 131
INSTALLATION 131
SEAT - SECOND ROW - FOLD-IN-FLOOR
REMOVAL 132
INSTALLATION 132
SEAT BACK COVER/FOAM - SECOND ROW - FOLD-IN-FLOOR
REMOVAL 133
INSTALLATION 133
SEAT BACK FRAME - SECOND ROW - FOLD-IN-FLOOR
REMOVAL 134
INSTALLATION 134
SEAT BACK PANEL - SECOND ROW -FOLD-IN-FLOOR
REMOVAL 134
INSTALLATION 134

SEAT BASE RISER - SECOND ROW - FOLD-IN-FLOOR
REMOVAL 134
INSTALLATION 135
SEAT CUSHION COVER/FOAM -SECOND ROW - FOLD-IN-FLOOR
REMOVAL 136
INSTALLATION 136
SEAT RECLINER/FORWARD FOLDING MECHANISM -SECOND ROW -FOLD-IN-FLOOR
REMOVAL 137
INSTALLATION 137
SEAT CUSHION SIDE SHIELD - SECOND ROW - FOLD-IN-FLOOR
REMOVAL 138
INSTALLATION 138
SEAT GAS STRUT - SECOND ROW - FOLD-IN-FLOOR
REMOVAL 138
INSTALLATION 139
SEAT PROP ROD - SECOND ROW - FOLD-IN-FLOOR
REMOVAL 139
INSTALLATION 140
BUCKET SEAT BACK - QUAD BUCKET
REMOVAL 140
INSTALLATION 141
QUAD SEAT CUSHION
REMOVAL 141
INSTALLATION 141
QUAD BUCKET SEAT SIDE SHIELD/CUP HOLDER
REMOVAL 141
INSTALLATION 142
QUAD BUCKET SEAT SIDE SHIELD - NO CUP HOLDER
REMOVAL 143
INSTALLATION 143
QUAD BUCKET SEAT RISER
REMOVAL 143
INSTALLATION 143
BENCH SEAT BACK PANEL
REMOVAL 143
INSTALLATION 144
SEAT CUSHION COVER - QUAD BUCKET, 50/50 SPLIT, BENCH
REMOVAL 144
INSTALLATION 144
BENCH SEAT RISER - 50/50 SPLIT
REMOVAL 145
INSTALLATION 145
BENCH SEAT RISER - SECOND ROW
REMOVAL 145
INSTALLATION 145
BENCH SEAT RISER - THIRD ROW
REMOVAL 145
INSTALLATION 145
SEAT BACK HINGE COVERS - QUAD BUCKET, 50/50 SPLIT, BENCH
REMOVAL 146
INSTALLATION 146
BENCH SEAT BACK HINGE
REMOVAL 146
INSTALLATION
INSTALLATION 146
SYNCHRONIZING CABLE ADJUSTMENT . . 147
BENCH SEAT BACK
REMOVAL 147
INSTALLATION 147
BENCH SEAT BACK COVER
REMOVAL 148
INSTALLATION 148
BENCH SEAT TRACK
REMOVAL 148
INSTALLATION 148
PLASTIC GROCERY BAG RETAINER
REMOVAL 149
INSTALLATION 149
UNDER SEAT STORAGE BIN
REMOVAL 149
INSTALLATION 149
UNDER SEAT STORAGE BIN GUIDE
REMOVAL 150
INSTALLATION 150
UNDER SEAT STORAGE BIN LOCK/LATCH
REMOVAL 150
INSTALLATION 150
LUMBAR SUPPORT
REMOVAL 150
INSTALLATION 150
SEAT RISER LATCH LOCKING LINK
REMOVAL 151
INSTALLATION 151
QUAD BUCKET SEAT SIDE SHIELD/CUP HOLDER - FLAP AND SPRING ASSEMBLY
REMOVAL 151
INSTALLATION 151
BOTTOM OF SEAT CUSHION PAN PANEL-THIRD ROW - FOLD-IN-FLOOR
REMOVAL 152
INSTALLATION 152
HEADREST SLEEVE - THIRD ROW - FOLD-IN-FLOOR
REMOVAL 152
INSTALLATION 153
SEAT - THIRD ROW - FOLD-IN-FLOOR
REMOVAL 153
INSTALLATION 154

SEAT BACK COVER/FOAM - THIRD ROW - FOLD-IN-FLOOR
REMOVAL 155
INSTALLATION 156
SEAT BACK FRAME - THIRD ROW - FOLD-IN-FLOOR
REMOVAL 156
INSTALLATION 157
SEAT BELT CENTER LAP BELT - FOLD-IN-FLOOR
REMOVAL 157
INSTALLATION 157
SEAT BACK PANEL - THIRD ROW -FOLD-IN-FLOOR
REMOVAL 158
INSTALLATION 158
SEAT BACKSTOW STRAP - THIRD ROW - FOLD-IN-FLOOR
REMOVAL 158
INSTALLATION 158
SEAT CUSHION COVER/FOAM - THIRD ROW - FOLD-IN-FLOOR
REMOVAL 159
INSTALLATION 159
SIDE SHIELD CUP HOLDER - FOLD-IN-FLOOR
REMOVAL 160
INSTALLATION 160
SEAT RECLINER/FOLD FORWARD MECHANISM -THIRD ROW -FOLD-IN-FLOOR
REMOVAL 160
INSTALLATION 160

CHILD SEAT MODULE, BENCH SEAT

REMOVAL

(1) Close child restraint seat.
(2) Remove seat back cover. (Refer to 23 - BODY/SEATS/SEAT BACK COVER - REMOVAL).
(3) Remove screws attaching child restraint seat module hinges to seat back frame lower rail (Fig. 1).
(4) Return seat back to upright position.
(5) Disengage push in fasteners attaching upper bolster to child restraint seat module (Fig. 2).
(6) Remove screws attaching top of module to seat back frame upper rail (Fig. 3).
(7) Remove child restraint seat module from seat back (Fig. 4).

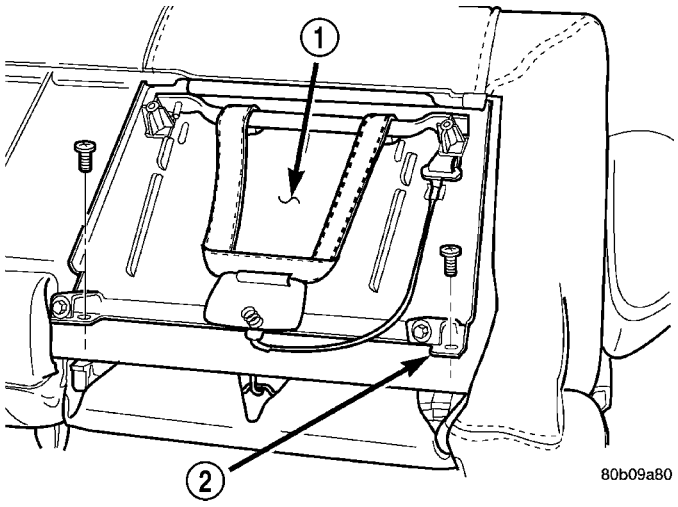

Fig. 1 CHILD RESTRAINT SEAT LOWER HINGE

1 - CHILD RESTRAINT SEAT MODULE
2 - LOWER HINGE

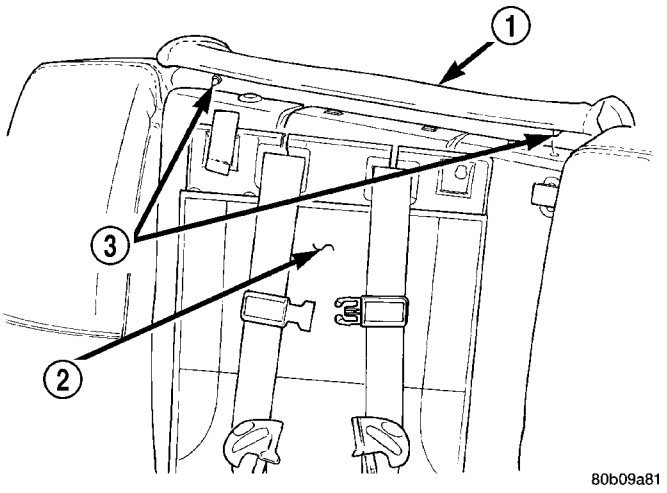

Fig. 2 CHILD RESTRAINT SEAT UPPER BOLSTER

1 - UPPER BOLSTER
2 - CHILD RESTRAINT SEAT MODULE
3 - PUSH-IN FASTENER

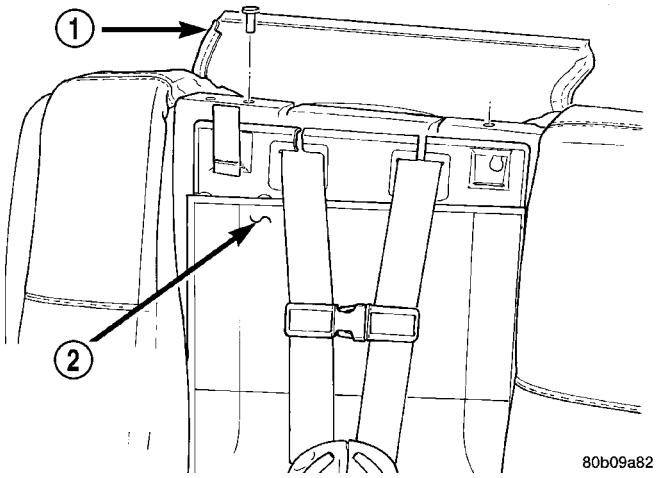

Fig. 3 CHILD RESTRAINT SEAT UPPER SCREWS

1 - UPPER BOLSTER
2 - CHILD RESTRAINT SEAT MODULE

CHILD SEAT MODULE, BENCH SEAT (Continued)

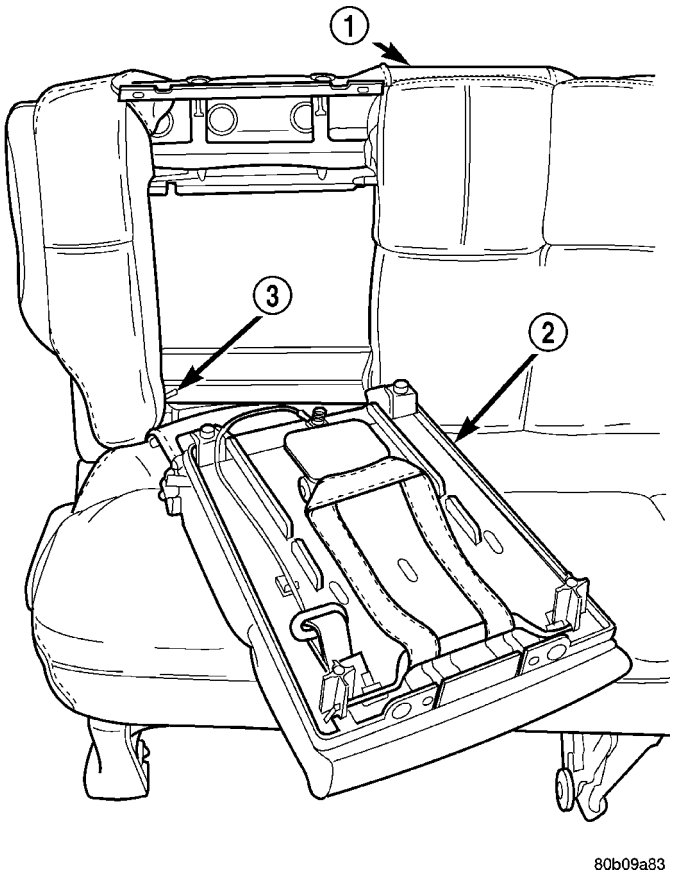

Fig. 4 CHILD RESTRAINT SEAT MODULE

1 - 1ST REAR SEAT BACK
2 - CHILD RESTRAINT SEAT MODULE
3 - SEAT BACK HINGE INTERLOCK LEVER

INSTALLATION

INSTALLATION

(1) Place child restraint seat module in position on seat back (Fig. 4).

(2) Position seat back hinge interlock lever over the top of the outboard child restraint seat hinge (Fig. 5).

(3) Install screws attaching child restraint seat module hinges to seat back frame lower rail (Fig. 1).

(4) Install screws attaching top of module to seat back frame upper rail (Fig. 3). Tighten nuts to 7 N·m (62 in. lbs.) torque.

(5) Install push in fasteners attaching upper bolster to child restraint seat module (Fig. 2).

(6) Return seat back to folded position.

(7) Install seat back cover. (Refer to 23 - BODY/SEATS/SEAT BACK COVER - INSTALLATION).

(8) Check belt for smooth operation and verify interlock operation. Recliner should not operate with child seat deployed.

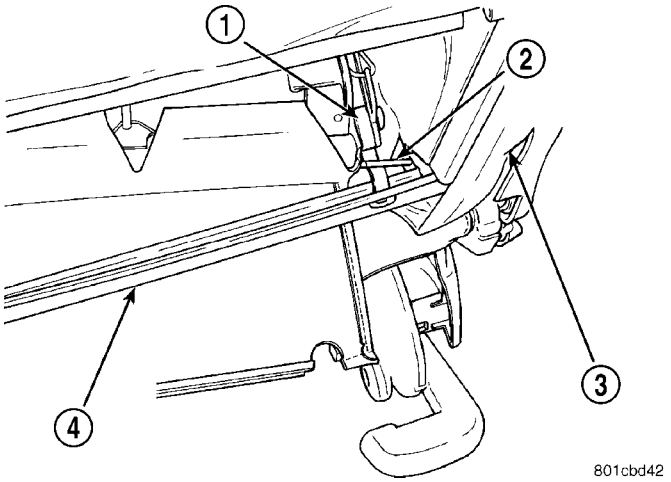

Fig. 5 INTERLOCK LEVER

1 - CHILD RESTRAINT SEAT HINGE
2 - SEAT BACK HINGE INTERLOCK LEVER
3 - 1ST REAR SEAT BACK
4 - SEAT BACK FRAME RAIL

SYNCHRONIZING CABLE ADJUSTMENT

NOTE: Bench seats equipped with child restraint seats have an interlock feature that will not allow the seat back to fold forward with the child seat open.
If the seat back hinges do not release at the same time the synchronizing cable must be adjusted.

(1) Remove seat from vehicle. Refer to Owner's Manual for proper procedures.

(2) Disengage cable from the recline mechanism by pulling the cable end toward the front of the seat (Fig. 6).

(3) Pull U-shaped locking tab on self-adjusting mehcanism to disengage auto-adjust feature.

(4) Reattach self-adjusting mechanism, pulling against spring load to tighten cable.

(5) Press locking tab onto the adjusting mechanism to lock into place.

CHILD SEAT MODULE, BENCH SEAT (Continued)

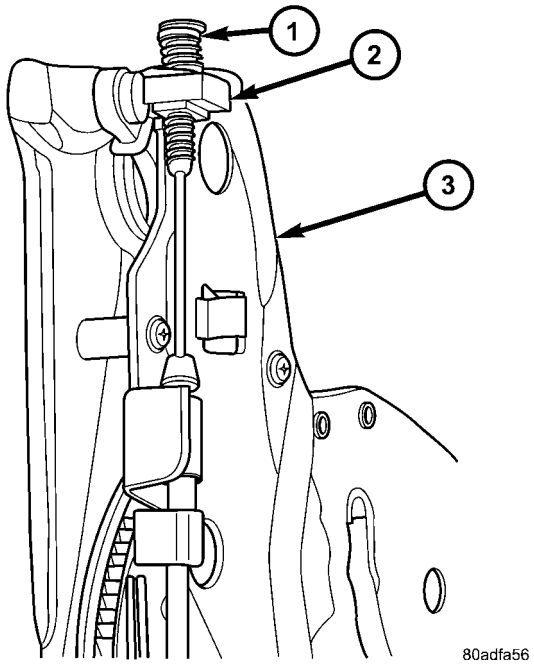

Fig. 6 SYNCHRONIZING CABLE

1 - CABLE END
2 - LOCKING TAB
3 - SETBACK HINGE

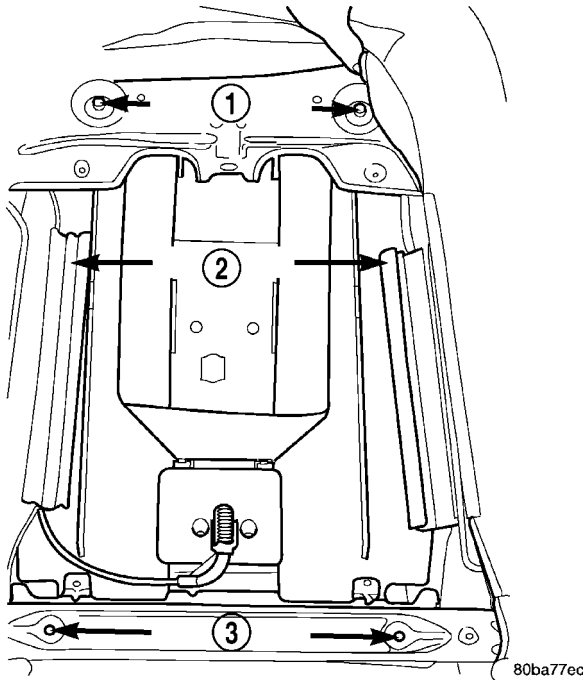

Fig. 8 CHILD RESTRAINT SEAT BACK

1 - FASTENERS
2 - J-STRAPS
3 - FASTENERS

QUAD CHILD SEAT

REMOVAL

(1) Remove the seat. Refer to Owner's Manual for proper procedures.
(2) Remove seat back cover (Fig. 7).
(3) Remove fasteners attaching quad child seat to the seat (Fig. 8).
(4) Remove quad child seat from the seat.

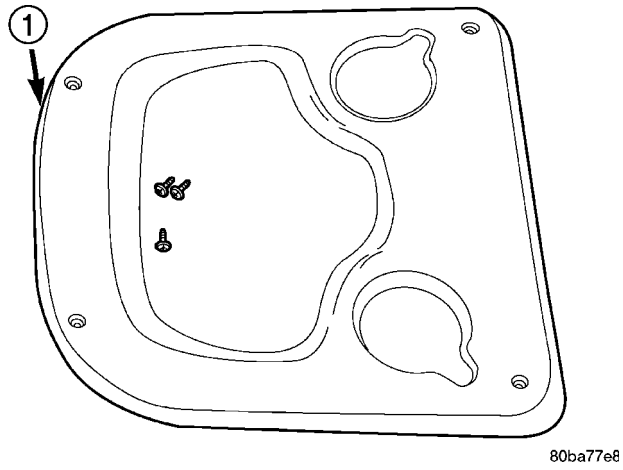

Fig. 7 SEAT BACK COVER

1 - SEAT BACK COVER

INSTALLATION

(1) Place quad child seat in position.
(2) Install fasteners and tighten to 13.5 N·m (10 ft. lbs.)
(3) Install seat back cover.
(4) Install seat in vehicle.

HEADREST

REMOVAL

(1) Lift head restraint to top of travel.
(2) Depress lock button on side of sleeve at top of seat back (Fig. 9).
(3) Pull head restraint from top of seat back.

INSTALLATION

(1) Place head restraint in position.
(2) Depress lock button on side of sleeve at top of seat back.
(3) Push heat restraint down into position.

HEADREST (Continued)

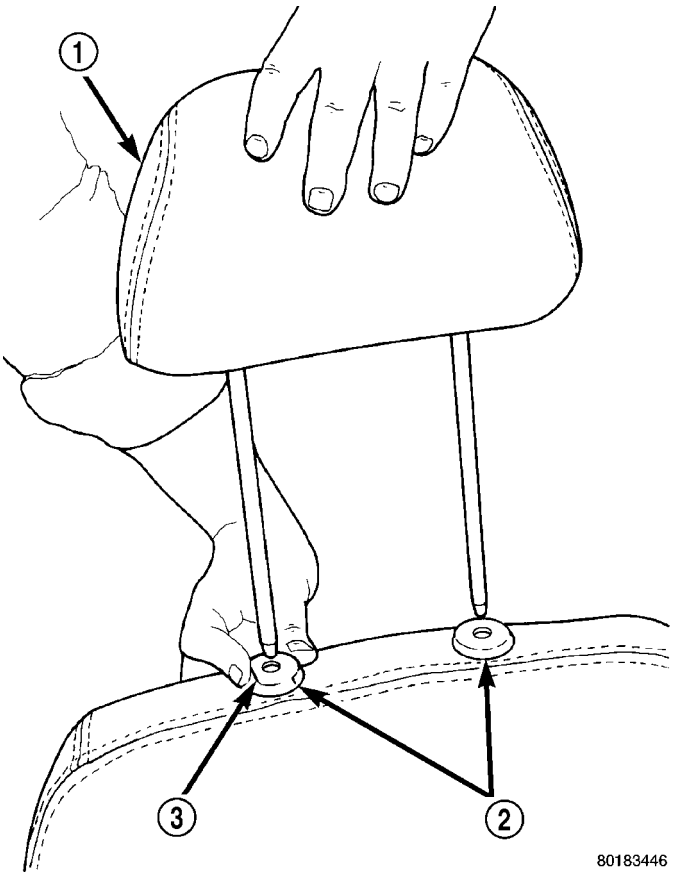

Fig. 9 HEAD RESTRAINT

1 - HEAD RESTRAINT
2 - SLEEVES
3 - LOCK BUTTON

HEADREST SLEEVE

REMOVAL

(1) Remove head rest.

(2) Disengage closure attaching bottom of trim cover together.

(3) Reach through opening at bottom of seat back.

(4) Pinch retainer barbs on end of head restraint sleeve together (Fig. 10).

(5) Pull head restraint sleeve upward and out the top of the seat back frame guide tube (Fig. 11).

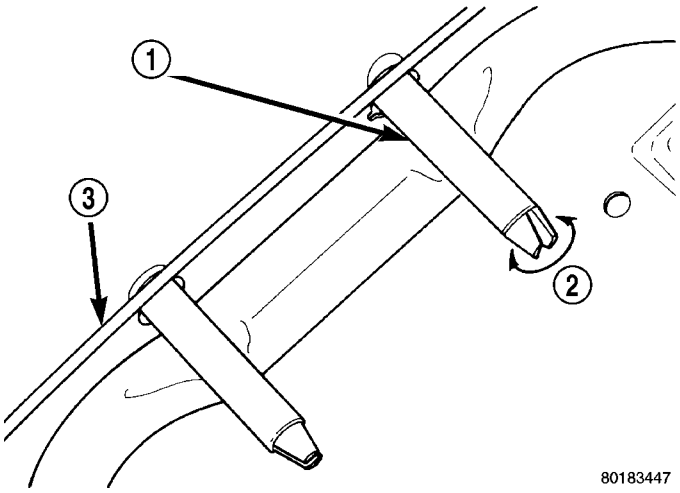

Fig. 10 HEAD RESTRAINT SLEEVE RETAINER

1 - GUIDE TUBE
2 - PINCH RETAINER TO RELEASE
3 - SEAT BACK FRAME

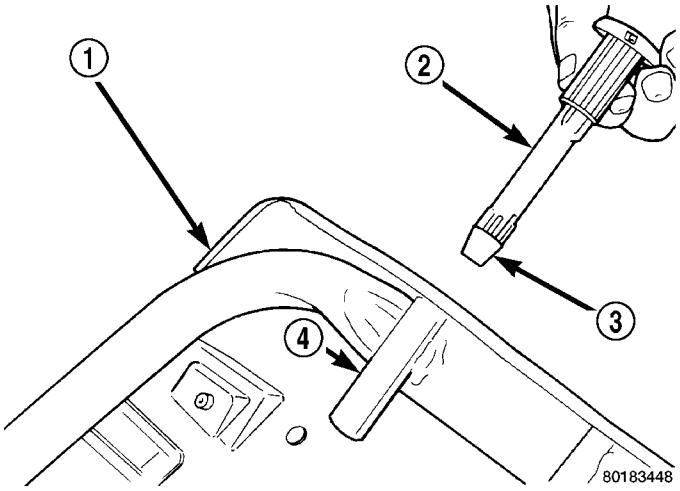

Fig. 11 HEAD RESTRAINT SLEEVE

1 - SEAT BACK FRAME
2 - HEAD RESTRAINT SLEEVE
3 - RETAINER
4 - GUIDE TUBE

INSTALLATION

(1) Insert head restraint sleeve into guide tube at top of seat back.

(2) Push head restraint sleeve downward until retainer clicks into lock position.

(3) Install seat back cover.

(4) Install head restraint.

RECLINER HANDLE

REMOVAL

(1) Remove screw holding recliner handle to recliner spline shaft (Fig. 12).

(2) Remove recliner handle from spline shaft.

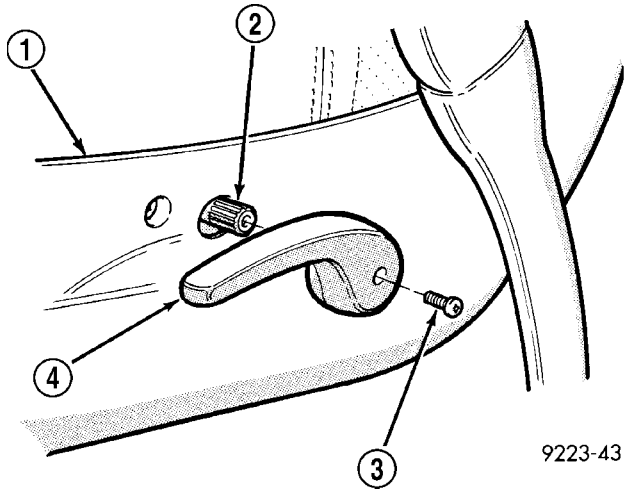

Fig. 12 RECLINER HANDLE - MANUAL

1 - CUSHION SIDE COVER
2 - RECLINER SPLINE
3 - SCREW
4 - RECLINER HANDLE

INSTALLATION

(1) Place recliner handle in position on spline shaft.

(2) Install screw to hold recliner handle to recliner spline shaft (Fig. 12).

ARMREST

REMOVAL

(1) Using a small flat blade, pry cap from side of armrest (Fig. 13).

(2) Remove bolt attaching armrest to seat back.

(3) Remove armrest from seat back.

INSTALLATION

(1) Place armrest in position on seat back.

(2) Install bolt attaching armrest to seat back. Tighten bolt to 29N·m (21 ft. lbs.) torque.

(3) Install side cap into the side of the armrest.

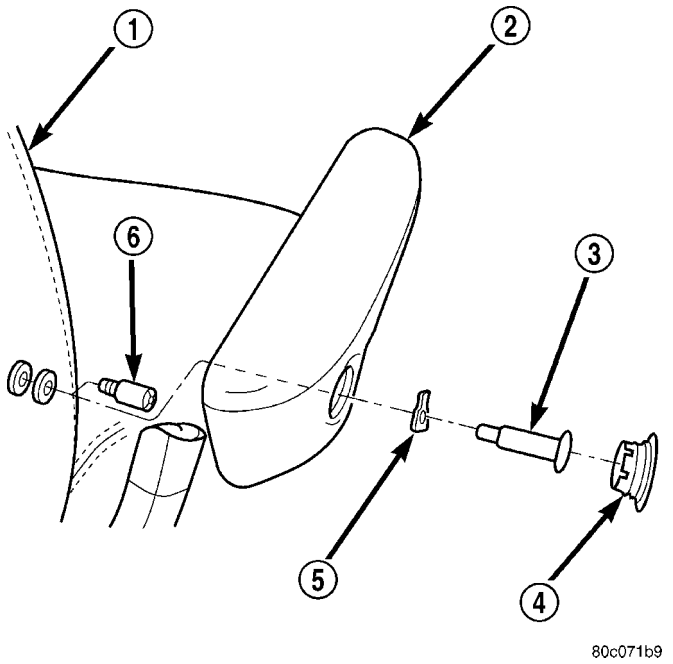

Fig. 13 ARMREST

1 - SEAT BACK
2 - ARMREST
3 - SHOULDER BOLT
4 - CAP
5 - WASHER
6 - STOP SCREW

FRONT SEAT

REMOVAL

A non-calibrated Occupant Classification Module (OCM) is the only component of the Occupant Classification System (OCS) that is available for separate service replacement, as outlined in the procedures that follow. The OCS components of the passenger side front seat cushion including the cushion frame, springs, pad, occupant detection bladder, pressure sensor, seat cushion foam and the OCM are a factory-calibrated and assembled unit. Once this unit is connected to a vehicle electrically, the calibration settings are uploaded from the OCM and stored in the memory of the Airbag Control Module (ACM). If only the OCM is subsequently replaced, the new, non-calibrated OCM learns the proper calibration settings from the ACM after it is connected to the vehicle electrically.

FRONT SEAT (Continued)

If any of the remaining OCS components of the passenger side front seat cushion require replacement, they are serviced only as a factory-calibrated, assembled, and tamper-evident service replacement package. This package includes the assembled frame, springs, pad, bladder, sensor, foam, wiring and a calibrated OCM. When installing this package, always replace all of the existing components with the new components as a unit. Do not attempt to separate or disconnect any of the new OCS components contained in the service replacement package from each other, and do not attempt to reuse any of the replaced components in this or any other vehicle.

Once any of the original factory-installed components except the OCM have been replaced with the service replacement package components, the OCM can only be serviced by replacing the entire passenger side front seat cushion unit with another complete service replacement package. (Refer to 23 - BODY/SEATS/SEAT CUSHION - FRONT - REMOVAL).

WARNING: TO AVOID PERSONAL INJURY OR DEATH, ON VEHICLES EQUIPPED WITH AIRBAGS, DISABLE THE SUPPLEMENTAL RESTRAINT SYSTEM BEFORE ATTEMPTING ANY STEERING WHEEL, STEERING COLUMN, AIRBAG, OCCUPANT CLASSIFICATION SYSTEM, SEAT BELT TENSIONER, IMPACT SENSOR, OR INSTRUMENT PANEL COMPONENT DIAGNOSIS OR SERVICE. DISCONNECT AND ISOLATE THE BATTERY NEGATIVE (GROUND) CABLE, THEN WAIT TWO MINUTES FOR THE SYSTEM CAPACITOR TO DISCHARGE BEFORE PERFORMING FURTHER DIAGNOSIS OR SERVICE. THIS IS THE ONLY SURE WAY TO DISABLE THE SUPPLEMENTAL RESTRAINT SYSTEM. FAILURE TO TAKE THE PROPER PRECAUTIONS COULD RESULT IN ACCIDENTAL AIRBAG DEPLOYMENT.

WARNING: TO AVOID PERSONAL INJURY OR DEATH ON VEHICLES EQUIPPED WITH THE OCCUPANT CLASSIFICATION SYSTEM (OCS), ONLY THE OCCUPANT CLASSIFICATION MODULE (OCM) AND THE SEAT CUSHION TRIM MAY BE SERVICED SEPARATELY. ALL OTHER COMPONENTS OF THE PASSENGER SIDE FRONT SEAT CUSHION ASSEMBLY MUST BE SERVICED ONLY AS A COMPLETE FACTORY-CALIBRATED, ASSEMBLED AND TAMPER-EVIDENT SERVICE REPLACEMENT PACKAGE. THIS PACKAGE INCLUDES THE FRAME, SPRINGS, PAD, BLADDER, SENSOR, FOAM, WIRING AND A CALIBRATED OCM. WHEN INSTALLING THIS PACKAGE ALWAYS REPLACE ALL OF THE EXISTING COMPONENTS WITH THE NEW COMPONENTS AS A UNIT. DO NOT ATTEMPT TO SEPARATE OR DISCONNECT ANY OF THE NEW OCS COMPONENTS IN THE SERVICE REPLACEMENT PACKAGE FROM EACH OTHER, AND DO NOT ATTEMPT TO REUSE ANY OF THE REPLACED COMPONENTS IN THIS OR ANY OTHER VEHICLE. FAILURE TO TAKE THE PROPER PRECAUTIONS COULD RESULT IN FAILURE OF THE PASSENGER AIRBAG TO DEPLOY WHEN REQUIRED, OR IN PASSENGER AIRBAG DEPLOYMENT WHEN NOT REQUIRED.

(1) Remove access winch cover (spare tire) plug (Fig. 14).

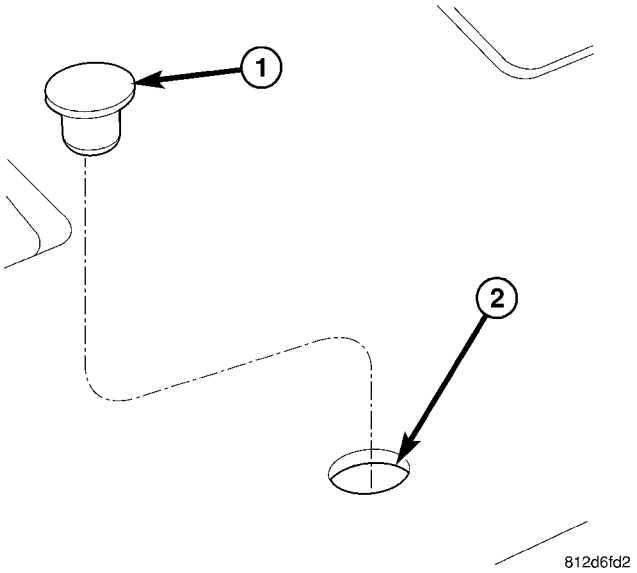

Fig. 14 ACCESS TO WINCH

1 - WINCH PLUG
2 - ACCESS HOLE TO WINCH

(2) Lower spare tire approximately 18 inches before raising vehicle to access the nuts.

(3) From under vehicle, remove nuts attaching front seat risers to the floor.

(4) Lower vehicle.

(5) Remove seat and riser from floor (Fig. 15).

(6) Tip seat rearward and disconnect wire connectors from body harness, if equipped.

(7) Remove seat from vehicle.

FRONT SEAT (Continued)

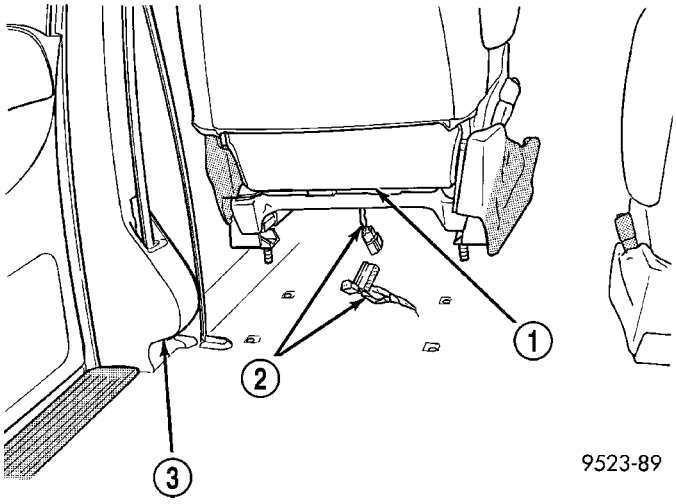

Fig. 15 FRONT SEAT

1 - FRONT SEAT
2 - CONNECTORS
3 - B-PILLAR

INSTALLATION

A non-calibrated Occupant Classification Module (OCM) is the only component of the Occupant Classification System (OCS) that is available for separate service replacement, as outlined in the procedures that follow. The OCS components of the passenger side front seat cushion including the cushion frame, springs, pad, occupant detection bladder, pressure sensor, seat cushion foam and the OCM are a factory-calibrated and assembled unit. Once this unit is connected to a vehicle electrically, the calibration settings are uploaded from the OCM and stored in the memory of the Airbag Control Module (ACM). If only the OCM is subsequently replaced, the new, non-calibrated OCM learns the proper calibration settings from the ACM after it is connected to the vehicle electrically.

If any of the remaining OCS components of the passenger side front seat cushion require replacement, they are serviced only as a factory-calibrated, assembled, and tamper-evident service replacement package. This package includes the assembled frame, springs, pad, bladder, sensor, foam, wiring and a calibrated OCM. When installing this package, always replace all of the existing components with the new components as a unit. Do not attempt to separate or disconnect any of the new OCS components contained in the service replacement package from each other, and do not attempt to reuse any of the replaced components in this or any other vehicle.

Once any of the original factory-installed components except the OCM have been replaced with the service replacement package components, the OCM can only be serviced by replacing the entire passenger side front seat cushion unit with another complete service replacement package. (Refer to 23 - BODY/SEATS/SEAT CUSHION - FRONT - REMOVAL).

WARNING: TO AVOID PERSONAL INJURY OR DEATH, ON VEHICLES EQUIPPED WITH AIRBAGS, DISABLE THE SUPPLEMENTAL RESTRAINT SYSTEM BEFORE ATTEMPTING ANY STEERING WHEEL, STEERING COLUMN, AIRBAG, OCCUPANT CLASSIFICATION SYSTEM, SEAT BELT TENSIONER, IMPACT SENSOR, OR INSTRUMENT PANEL COMPONENT DIAGNOSIS OR SERVICE. DISCONNECT AND ISOLATE THE BATTERY NEGATIVE (GROUND) CABLE, THEN WAIT TWO MINUTES FOR THE SYSTEM CAPACITOR TO DISCHARGE BEFORE PERFORMING FURTHER DIAGNOSIS OR SERVICE. THIS IS THE ONLY SURE WAY TO DISABLE THE SUPPLEMENTAL RESTRAINT SYSTEM. FAILURE TO TAKE THE PROPER PRECAUTIONS COULD RESULT IN ACCIDENTAL AIRBAG DEPLOYMENT.

WARNING: TO AVOID PERSONAL INJURY OR DEATH ON VEHICLES EQUIPPED WITH THE OCCUPANT CLASSIFICATION SYSTEM (OCS), ONLY THE OCCUPANT CLASSIFICATION MODULE (OCM) AND THE SEAT CUSHION TRIM MAY BE SERVICED SEPARATELY. ALL OTHER COMPONENTS OF THE PASSENGER SIDE FRONT SEAT CUSHION ASSEMBLY MUST BE SERVICED ONLY AS A COMPLETE FACTORY-CALIBRATED, ASSEMBLED AND TAMPER-EVIDENT SERVICE REPLACEMENT PACKAGE. THIS PACKAGE INCLUDES THE FRAME, SPRINGS, PAD, BLADDER, SENSOR, FOAM, WIRING AND A CALIBRATED OCM. WHEN INSTALLING THIS PACKAGE ALWAYS REPLACE ALL OF THE EXISTING COMPONENTS WITH THE NEW COMPONENTS AS A UNIT. DO NOT ATTEMPT TO SEPARATE OR DISCONNECT ANY OF THE NEW OCS COMPONENTS IN THE SERVICE REPLACEMENT PACKAGE FROM EACH OTHER, AND DO NOT ATTEMPT TO REUSE ANY OF THE REPLACED COMPONENTS IN THIS OR ANY OTHER VEHICLE. FAILURE TO TAKE THE PROPER PRECAUTIONS COULD RESULT IN FAILURE OF THE PASSENGER AIRBAG TO DEPLOY WHEN REQUIRED, OR IN PASSENGER AIRBAG DEPLOYMENT WHEN NOT REQUIRED.

(1) Place seat into position (Fig. 15).

(2) Tip seat rearward and connect wire connectors to body harness, if equipped.

(3) Place seat riser studs into openings in the floor.

(4) From under vehicle, install nuts attaching front seat risers to the floor. Tighten nuts to 88 N·m (65 ft. lbs.) torque.

(5) Crank winch to raise spare tire into position, and install winch plug (Fig. 14).

FRONT SEAT BACK

REMOVAL

WARNING: TO AVOID PERSONAL INJURY OR DEATH, ON VEHICLES EQUIPPED WITH AIRBAGS, DISABLE THE SUPPLEMENTAL RESTRAINT SYSTEM BEFORE ATTEMPTING ANY STEERING WHEEL, STEERING COLUMN, AIRBAG, OCCUPANT CLASSIFICATION SYSTEM, SEAT BELT TENSIONER, IMPACT SENSOR, OR INSTRUMENT PANEL COMPONENT DIAGNOSIS OR SERVICE. DISCONNECT AND ISOLATE THE BATTERY NEGATIVE (GROUND) CABLE, THEN WAIT TWO MINUTES FOR THE SYSTEM CAPACITOR TO DISCHARGE BEFORE PERFORMING FURTHER DIAGNOSIS OR SERVICE. THIS IS THE ONLY SURE WAY TO DISABLE THE SUPPLEMENTAL RESTRAINT SYSTEM. FAILURE TO TAKE THE PROPER PRECAUTIONS COULD RESULT IN ACCIDENTAL AIRBAG DEPLOYMENT.

WARNING: TO AVOID PERSONAL INJURY OR DEATH ON VEHICLES EQUIPPED WITH THE OCCUPANT CLASSIFICATION SYSTEM (OCS), ONLY THE OCCUPANT CLASSIFICATION MODULE (OCM) AND THE SEAT CUSHION TRIM MAY BE SERVICED SEPARATELY. ALL OTHER COMPONENTS OF THE PASSENGER SIDE FRONT SEAT CUSHION ASSEMBLY MUST BE SERVICED ONLY AS A COMPLETE FACTORY-CALIBRATED, ASSEMBLED AND TAMPER-EVIDENT SERVICE REPLACEMENT PACKAGE. THIS PACKAGE INCLUDES THE FRAME, SPRINGS, PAD, BLADDER, SENSOR, FOAM, WIRING AND A CALIBRATED OCM. WHEN INSTALLING THIS PACKAGE ALWAYS REPLACE ALL OF THE EXISTING COMPONENTS WITH THE NEW COMPONENTS AS A UNIT. DO NOT ATTEMPT TO SEPARATE OR DISCONNECT ANY OF THE NEW OCS COMPONENTS IN THE SERVICE REPLACEMENT PACKAGE FROM EACH OTHER, AND DO NOT ATTEMPT TO REUSE ANY OF THE REPLACED COMPONENTS IN THIS OR ANY OTHER VEHICLE. FAILURE TO TAKE THE PROPER PRECAUTIONS COULD RESULT IN FAILURE OF THE PASSENGER AIRBAG TO DEPLOY WHEN REQUIRED, OR IN PASSENGER AIRBAG DEPLOYMENT WHEN NOT REQUIRED.

(1) Remove head rest sleeves. (Refer to 23 - BODY/SEATS/HEADREST SLEEVE - REMOVAL).

(2) Remove the armrest. (Refer to 23 - BODY/SEATS/ARMREST - REMOVAL).

(3) Remove the seat back recliner lever.

(4) Remove the lumbar adjustment lever.

(5) Remove both seat cushion side covers. (Refer to 23 - BODY/SEATS/FRONT SEAT CUSHION SIDE COVER - REMOVAL).

(6) Remove nut attaching the recliner to the seat back frame (Fig. 16).

(7) Remove both pivot bolts and remove seat back from recliner.

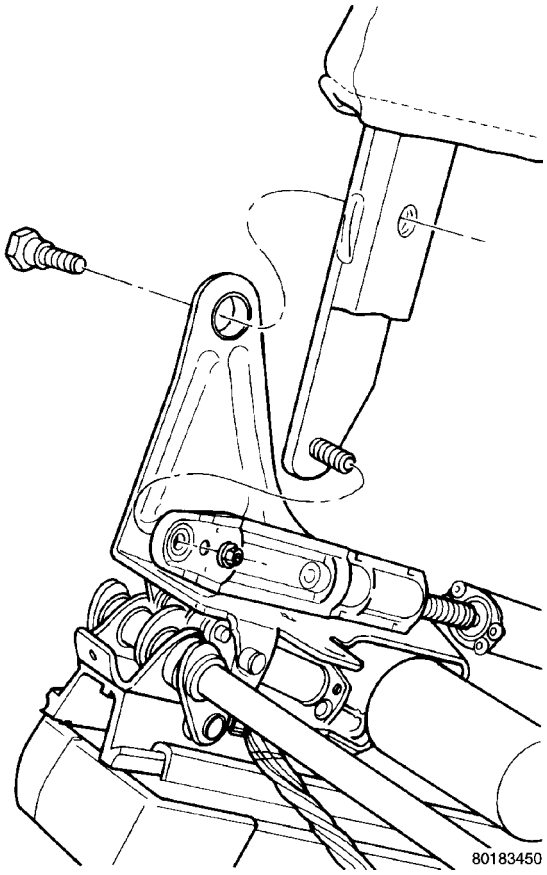

Fig. 16 FRONT SEAT BACK

INSTALLATION

WARNING: TO AVOID PERSONAL INJURY OR DEATH, ON VEHICLES EQUIPPED WITH AIRBAGS, DISABLE THE SUPPLEMENTAL RESTRAINT SYSTEM BEFORE ATTEMPTING ANY STEERING WHEEL, STEERING COLUMN, AIRBAG, OCCUPANT CLASSIFICATION SYSTEM, SEAT BELT TENSIONER, IMPACT SENSOR, OR INSTRUMENT PANEL COMPONENT DIAGNOSIS OR SERVICE. DISCONNECT AND ISOLATE THE BATTERY NEGATIVE (GROUND) CABLE, THEN WAIT TWO MINUTES FOR THE SYSTEM CAPACITOR TO DISCHARGE BEFORE PERFORMING FURTHER DIAGNOSIS OR SERVICE. THIS IS THE ONLY SURE WAY TO DISABLE THE SUPPLEMENTAL RESTRAINT SYSTEM. FAILURE TO TAKE THE PROPER PRECAUTIONS COULD RESULT IN ACCIDENTAL AIRBAG DEPLOYMENT.

FRONT SEAT BACK (Continued)

WARNING: TO AVOID PERSONAL INJURY OR DEATH ON VEHICLES EQUIPPED WITH THE OCCUPANT CLASSIFICATION SYSTEM (OCS), ONLY THE OCCUPANT CLASSIFICATION MODULE (OCM) AND THE SEAT CUSHION TRIM MAY BE SERVICED SEPARATELY. ALL OTHER COMPONENTS OF THE PASSENGER SIDE FRONT SEAT CUSHION ASSEMBLY MUST BE SERVICED ONLY AS A COMPLETE FACTORY-CALIBRATED, ASSEMBLED AND TAMPER-EVIDENT SERVICE REPLACEMENT PACKAGE. THIS PACKAGE INCLUDES THE FRAME, SPRINGS, PAD, BLADDER, SENSOR, FOAM, WIRING AND A CALIBRATED OCM. WHEN INSTALLING THIS PACKAGE ALWAYS REPLACE ALL OF THE EXISTING COMPONENTS WITH THE NEW COMPONENTS AS A UNIT. DO NOT ATTEMPT TO SEPARATE OR DISCONNECT ANY OF THE NEW OCS COMPONENTS IN THE SERVICE REPLACEMENT PACKAGE FROM EACH OTHER, AND DO NOT ATTEMPT TO REUSE ANY OF THE REPLACED COMPONENTS IN THIS OR ANY OTHER VEHICLE. FAILURE TO TAKE THE PROPER PRECAUTIONS COULD RESULT IN FAILURE OF THE PASSENGER AIRBAG TO DEPLOY WHEN REQUIRED, OR IN PASSENGER AIRBAG DEPLOYMENT WHEN NOT REQUIRED.

(1) Place seat back into position.

(2) Install both pivot bolts attaching seat back frame to seat track (Fig. 16). Tighten bolts to 48 N·m (35 ft. lbs.) torque.

(3) Install nut attaching the recliner to the seat back frame. Tighten nut to 12 N·m (105 in. lbs.) torque.

(4) Install both seat cushion side covers. (Refer to 23 - BODY/SEATS/FRONT SEAT CUSHION SIDE COVER - INSTALLATION).

(5) Install the lumbar adjustment lever.

(6) Install the seat back recliner lever.

(7) Install the armrest. (Refer to 23 - BODY/SEATS/ARMREST - INSTALLATION).

(8) Install headrest sleeves. (Refer to 23 - BODY/SEATS/HEADREST SLEEVE - INSTALLATION).

FRONT SEAT BACK ASSIST STRAP

REMOVAL

(1) Using a small screw driver, pry screw plugs from ends of assist strap (Fig. 17).

(2) Remove screws attaching assist strap to seat back.

(3) Remove assist strap from vehicle.

INSTALLATION

(1) Place assist strap in position on vehicle.

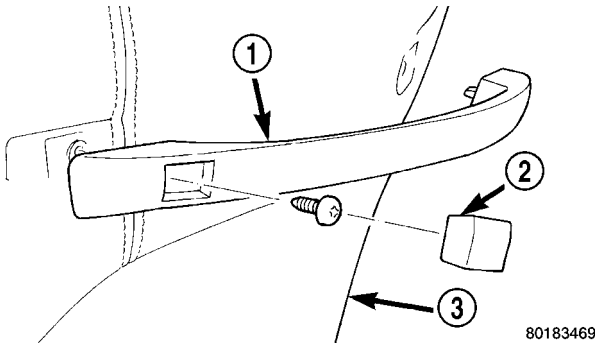

Fig. 17 FRONT SEAT BACK ASSIST STRAP

1 - ASSIST STRAP
2 - SCREW PLUG
3 - SEAT BACK

(2) Install screws attaching assist strap to seat back. Tighten screws to 7.0 N·m (60 in. lbs.).

(3) Insert screw plugs into ends of assist strap (Fig. 17).

FRONT SEAT BACK PANEL

REMOVAL

(1) Remove the screws (Fig. 18).

(2) Tip the top of the panel away from the seat back and lift off the hooks at the bottom to remove.

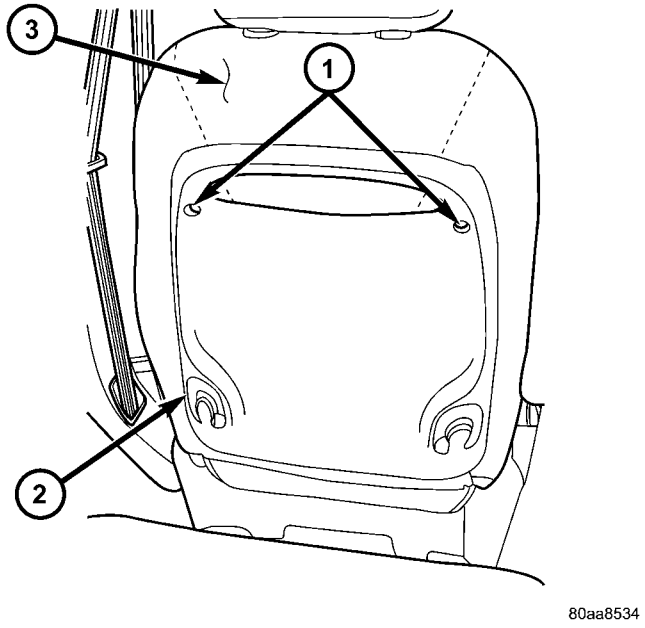

Fig. 18 FRONT SEAT BACK PANEL - TYPICAL

1 - SCREWS
2 - SEAT BACK PANEL
3 - SEAT BACK

FRONT SEAT BACK PANEL (Continued)

INSTALLATION

(1) Place seat back cover into position and engage the bottom hooks (Fig. 18).
(2) Install the top screws.

FRONT SEAT BACK COVER

REMOVAL

WARNING: TO AVOID PERSONAL INJURY OR DEATH, ON VEHICLES EQUIPPED WITH AIRBAGS, DISABLE THE SUPPLEMENTAL RESTRAINT SYSTEM BEFORE ATTEMPTING ANY STEERING WHEEL, STEERING COLUMN, AIRBAG, OCCUPANT CLASSIFICATION SYSTEM, SEAT BELT TENSIONER, IMPACT SENSOR, OR INSTRUMENT PANEL COMPONENT DIAGNOSIS OR SERVICE. DISCONNECT AND ISOLATE THE BATTERY NEGATIVE (GROUND) CABLE, THEN WAIT TWO MINUTES FOR THE SYSTEM CAPACITOR TO DISCHARGE BEFORE PERFORMING FURTHER DIAGNOSIS OR SERVICE. THIS IS THE ONLY SURE WAY TO DISABLE THE SUPPLEMENTAL RESTRAINT SYSTEM. FAILURE TO TAKE THE PROPER PRECAUTIONS COULD RESULT IN ACCIDENTAL AIRBAG DEPLOYMENT.

WARNING: TO AVOID PERSONAL INJURY OR DEATH ON VEHICLES EQUIPPED WITH THE OCCUPANT CLASSIFICATION SYSTEM (OCS), ONLY THE OCCUPANT CLASSIFICATION MODULE (OCM) AND THE SEAT CUSHION TRIM MAY BE SERVICED SEPARATELY. ALL OTHER COMPONENTS OF THE PASSENGER SIDE FRONT SEAT CUSHION ASSEMBLY MUST BE SERVICED ONLY AS A COMPLETE FACTORY-CALIBRATED, ASSEMBLED AND TAMPER-EVIDENT SERVICE REPLACEMENT PACKAGE. THIS PACKAGE INCLUDES THE FRAME, SPRINGS, PAD, BLADDER, SENSOR, FOAM, WIRING AND A CALIBRATED OCM. WHEN INSTALLING THIS PACKAGE ALWAYS REPLACE ALL OF THE EXISTING COMPONENTS WITH THE NEW COMPONENTS AS A UNIT. DO NOT ATTEMPT TO SEPARATE OR DISCONNECT ANY OF THE NEW OCS COMPONENTS IN THE SERVICE REPLACEMENT PACKAGE FROM EACH OTHER, AND DO NOT ATTEMPT TO REUSE ANY OF THE REPLACED COMPONENTS IN THIS OR ANY OTHER VEHICLE. FAILURE TO TAKE THE PROPER PRECAUTIONS COULD RESULT IN FAILURE OF THE PASSENGER AIRBAG TO DEPLOY WHEN REQUIRED, OR IN PASSENGER AIRBAG DEPLOYMENT WHEN NOT REQUIRED.

(1) Remove headrest sleeves (Fig. 19).

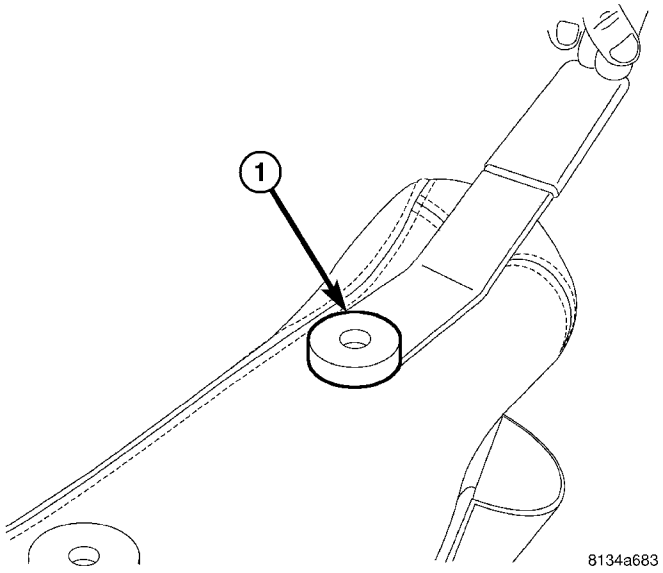

Fig. 19 HEADREST SLEEVE

1 - REMOVE SLEEVE

(2) Remove armrest cap and attaching bolt (Fig. 20) and (Fig. 21).

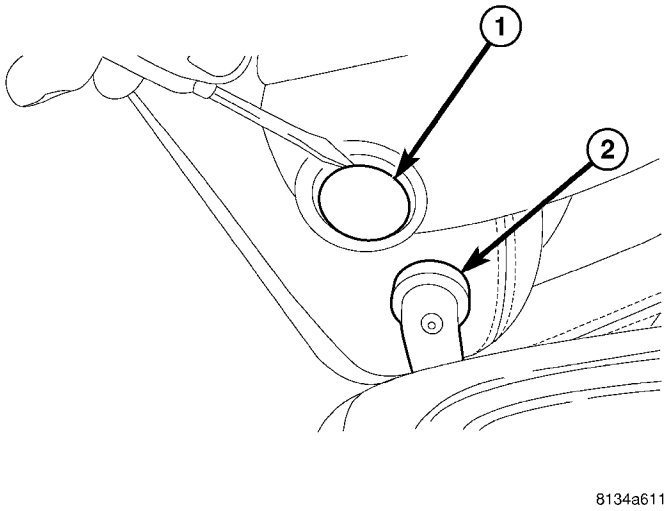

Fig. 20 FRONT SEAT ARMREST

1 - ARMREST CAP
2 - LUMBAR HANDLE

FRONT SEAT BACK COVER (Continued)

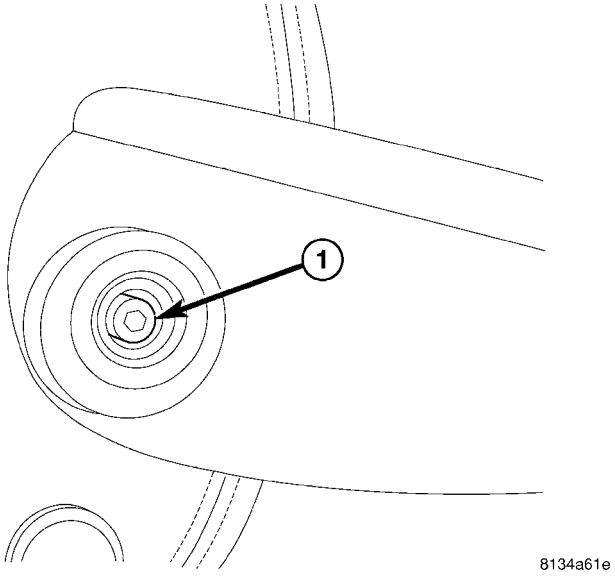

Fig. 21 FRONT SEAT ARMREST BOLT

1 - ARMREST BOLT

(3) Remove lumbar handle (Fig. 22).

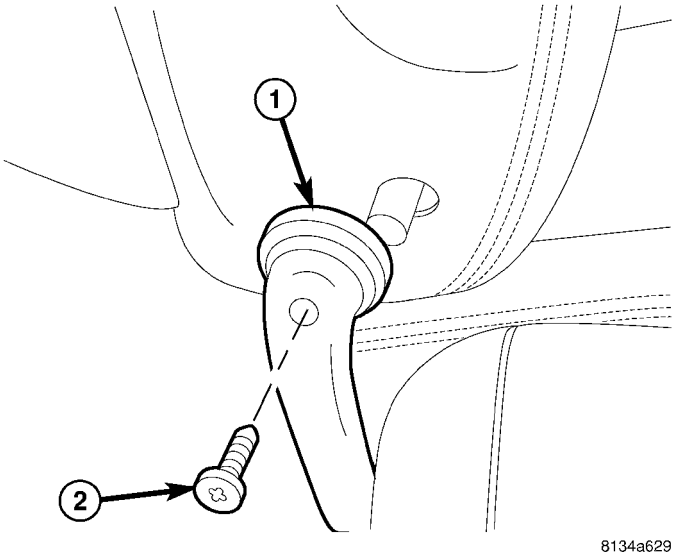

Fig. 22 LUMBAR HANDLE

1 - LUMBAR HANDLE
2 - ATTACHING SCREW

(4) Remove the seat back panel (Fig. 23). (Refer to 23 - BODY/SEATS/SEAT BACK - REMOVAL).

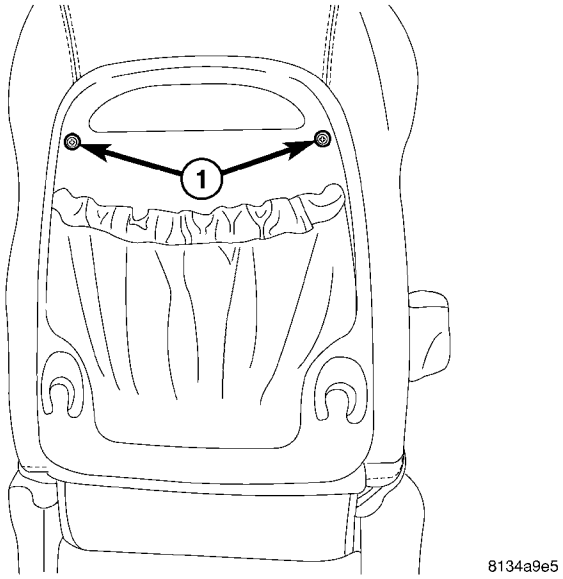

Fig. 23 FRONT SEAT BACK PANEL

1 - ATTACHING SCREWS

(5) Release seat back cover hook and loop strip (Fig. 24).

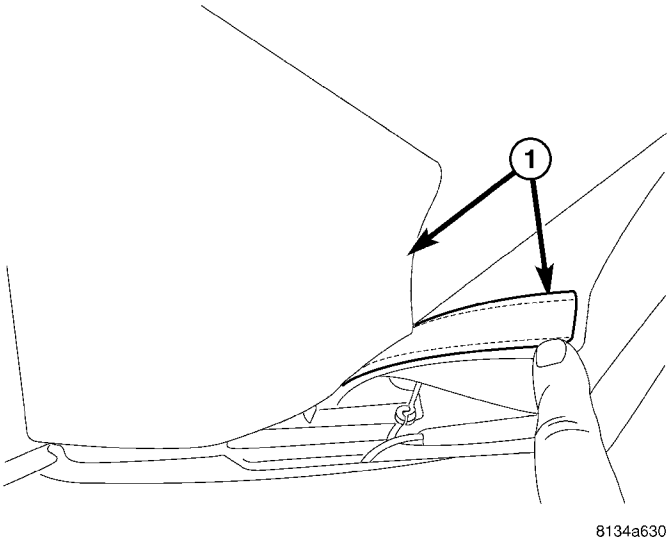

Fig. 24 FRONT SEAT BACK COVER

1 - HOOD AND LOOP STRIP

FRONT SEAT BACK COVER (Continued)

(6) Unclip J-straps (Fig. 25) and (Fig. 26).

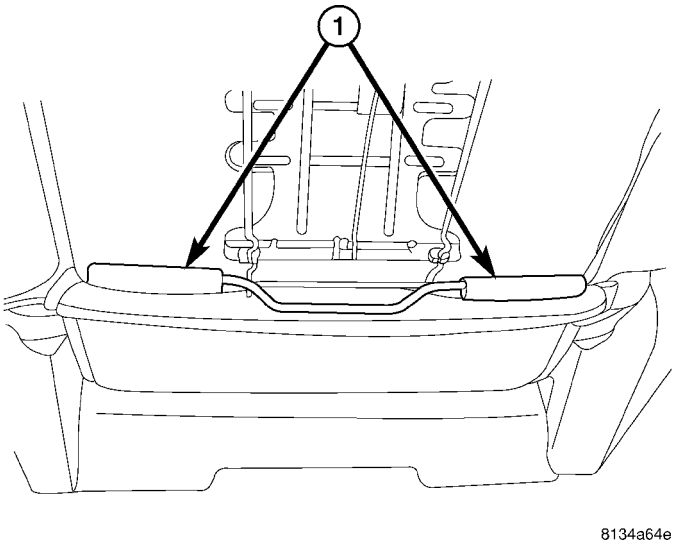

Fig. 25 FRONT SEAT BACK LOWER

1 - J-STRAPS

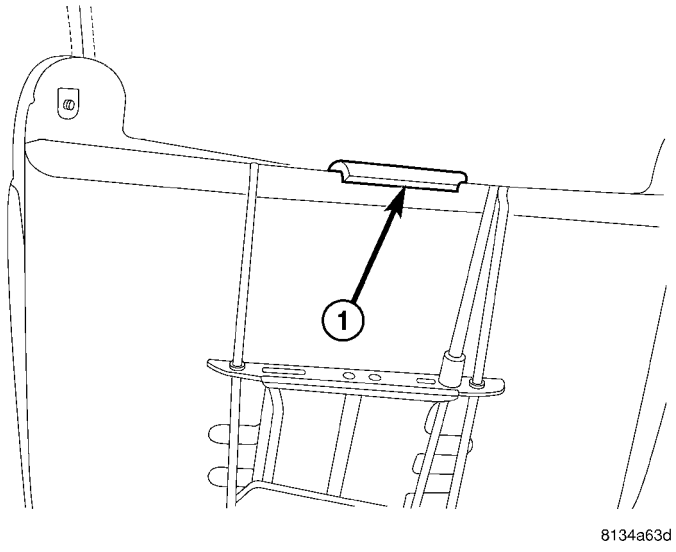

Fig. 26 FRONT SEAT BACK

1 - J-STRAP

(7) Pull seat back cover and foam free of seat back frame assembly (Fig. 27).

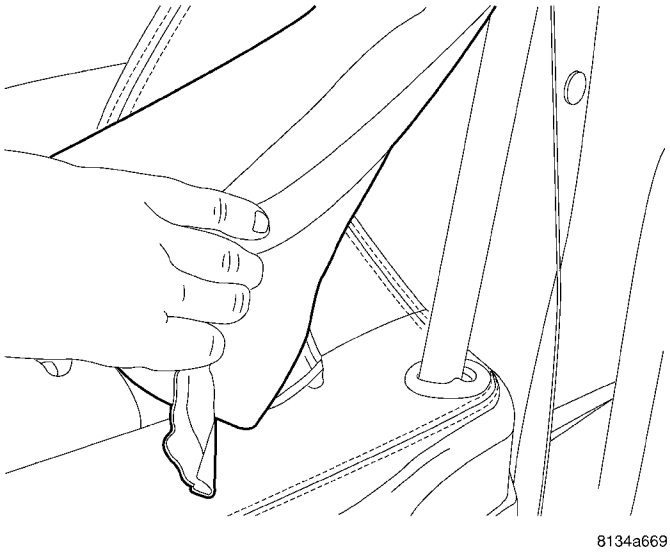

Fig. 27 FRONT SEAT BACK COVER & FOAM

(8) Lift seat back cover and foam from the seat back frame (Fig. 28).

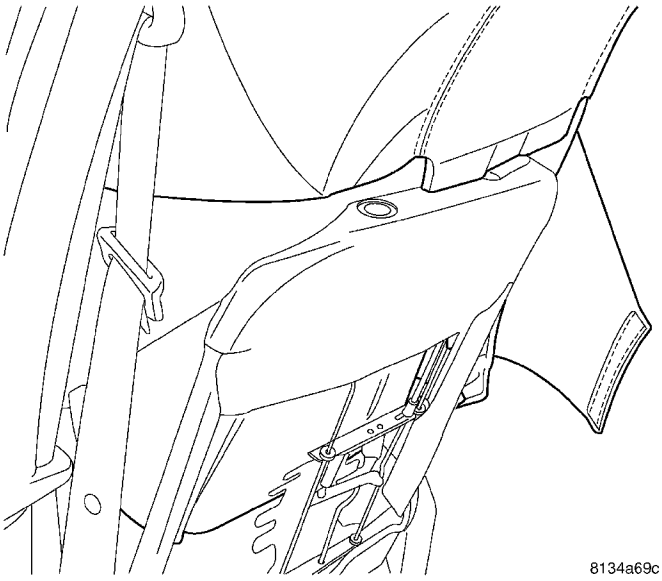

Fig. 28 FRONT SEAT BACK COVER/FOAM

FRONT SEAT BACK COVER (Continued)

(9) Separate seat back cover from the foam by siding the locking strips through the keepers (Fig. 29) and (Fig. 30).

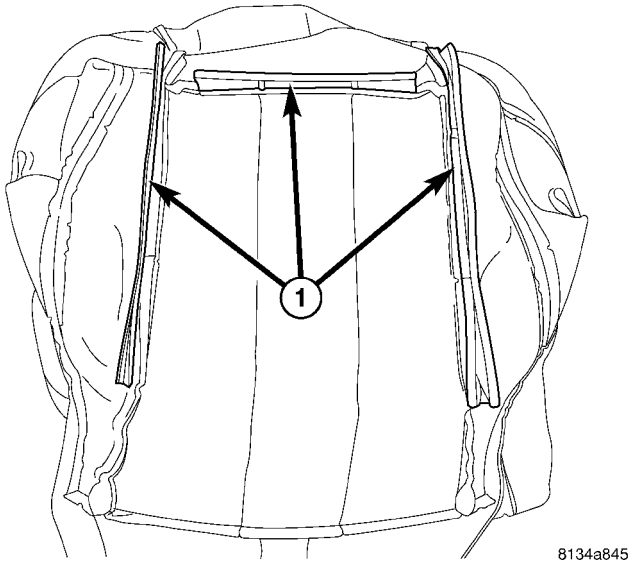

Fig. 29 FRONT SEAT BACK COVER

1 - LOCKING STRIPS

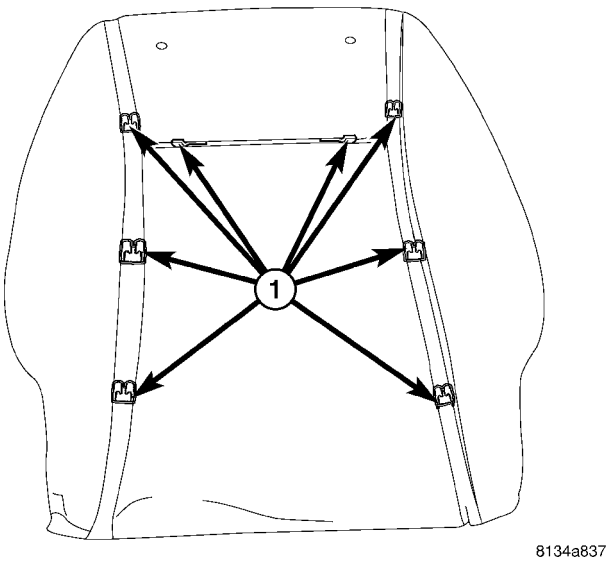

Fig. 30 FRONT SEAT BACK FOAM

1 - KEEPERS

(10) Remove seat back cover from vehicle.

INSTALLATION

WARNING: TO AVOID PERSONAL INJURY OR DEATH, ON VEHICLES EQUIPPED WITH AIRBAGS, DISABLE THE SUPPLEMENTAL RESTRAINT SYSTEM BEFORE ATTEMPTING ANY STEERING WHEEL, STEERING COLUMN, AIRBAG, OCCUPANT CLASSIFICATION SYSTEM, SEAT BELT TENSIONER, IMPACT SENSOR, OR INSTRUMENT PANEL COMPONENT DIAGNOSIS OR SERVICE. DISCONNECT AND ISOLATE THE BATTERY NEGATIVE (GROUND) CABLE, THEN WAIT TWO MINUTES FOR THE SYSTEM CAPACITOR TO DISCHARGE BEFORE PERFORMING FURTHER DIAGNOSIS OR SERVICE. THIS IS THE ONLY SURE WAY TO DISABLE THE SUPPLEMENTAL RESTRAINT SYSTEM. FAILURE TO TAKE THE PROPER PRECAUTIONS COULD RESULT IN ACCIDENTAL AIRBAG DEPLOYMENT.

WARNING: TO AVOID PERSONAL INJURY OR DEATH ON VEHICLES EQUIPPED WITH THE OCCUPANT CLASSIFICATION SYSTEM (OCS), ONLY THE OCCUPANT CLASSIFICATION MODULE (OCM) AND THE SEAT CUSHION TRIM MAY BE SERVICED SEPARATELY. ALL OTHER COMPONENTS OF THE PASSENGER SIDE FRONT SEAT CUSHION ASSEMBLY MUST BE SERVICED ONLY AS A COMPLETE FACTORY-CALIBRATED, ASSEMBLED AND TAMPER-EVIDENT SERVICE REPLACEMENT PACKAGE. THIS PACKAGE INCLUDES THE FRAME, SPRINGS, PAD, BLADDER, SENSOR, FOAM, WIRING AND A CALIBRATED OCM. WHEN INSTALLING THIS PACKAGE ALWAYS REPLACE ALL OF THE EXISTING COMPONENTS WITH THE NEW COMPONENTS AS A UNIT. DO NOT ATTEMPT TO SEPARATE OR DISCONNECT ANY OF THE NEW OCS COMPONENTS IN THE SERVICE REPLACEMENT PACKAGE FROM EACH OTHER, AND DO NOT ATTEMPT TO REUSE ANY OF THE REPLACED COMPONENTS IN THIS OR ANY OTHER VEHICLE. FAILURE TO TAKE THE PROPER PRECAUTIONS COULD RESULT IN FAILURE OF THE PASSENGER AIRBAG TO DEPLOY WHEN REQUIRED, OR IN PASSENGER AIRBAG DEPLOYMENT WHEN NOT REQUIRED.

(1) Place seat back cover on to the foam and push locking strip into the keepers to lock seat back cover into position (Fig. 29) and (Fig. 30).

(2) Fit seat back cover and foam on to seat back frame (Fig. 28).

(3) Place seat back cover into position to clip J-straps (Fig. 25) and (Fig. 26).

(4) Pull seat back cover tight, and attach the hook and loop strip (Fig. 24).

FRONT SEAT BACK COVER (Continued)

(5) Install seat back panel (Fig. 23). (Refer to 23 - BODY/SEATS/SEAT BACK - INSTALLATION).

(6) Install lumbar handle (Fig. 22).

(7) Install armrest cap and attaching bolt (Fig. 20) and (Fig. 21).

(8) Install headrest sleeves and install headrest (Fig. 31).

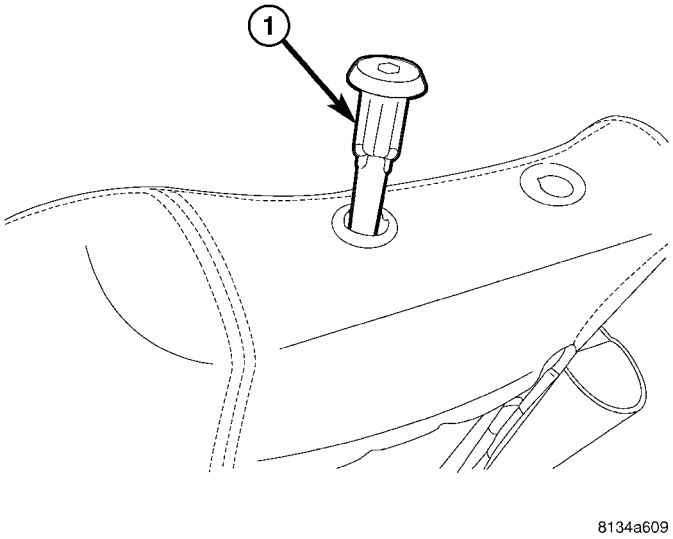

Fig. 31 FRONT SEAT HEADREST SLEEVE

1 - SLEEVE

FRONT SEAT CUSHION

REMOVAL

A non-calibrated Occupant Classification Module (OCM) is the only component of the Occupant Classification System (OCS) that is available for separate service replacement, as outlined in the procedures that follow. The OCS components of the passenger side front seat cushion including the cushion frame, springs, pad, occupant detection bladder, pressure sensor, seat cushion foam and the OCM are a factory-calibrated and assembled unit. Once this unit is connected to a vehicle electrically, the calibration settings are uploaded from the OCM and stored in the memory of the Airbag Control Module (ACM). If only the OCM is subsequently replaced, the new, non-calibrated OCM learns the proper calibration settings from the ACM after it is connected to the vehicle electrically.

If any of the remaining OCS components of the passenger side front seat cushion require replacement, they are serviced only as a factory-calibrated, assembled, and tamper-evident service replacement package. This package includes the assembled frame, springs, pad, bladder, sensor, foam, wiring and a calibrated OCM. When installing this package, always replace all of the existing components with the new components as a unit. Do not attempt to separate or disconnect any of the new OCS components contained in the service replacement package from each other, and do not attempt to reuse any of the replaced components in this or any other vehicle.

Once any of the original factory-installed components except the OCM have been replaced with the service replacement package components, the OCM can only be serviced by replacing the entire passenger side front seat cushion unit with another complete service replacement package.

WARNING: TO AVOID PERSONAL INJURY OR DEATH, ON VEHICLES EQUIPPED WITH AIRBAGS, DISABLE THE SUPPLEMENTAL RESTRAINT SYSTEM BEFORE ATTEMPTING ANY STEERING WHEEL, STEERING COLUMN, AIRBAG, OCCUPANT CLASSIFICATION SYSTEM, SEAT BELT TENSIONER, IMPACT SENSOR, OR INSTRUMENT PANEL COMPONENT DIAGNOSIS OR SERVICE. DISCONNECT AND ISOLATE THE BATTERY NEGATIVE (GROUND) CABLE, THEN WAIT TWO MINUTES FOR THE SYSTEM CAPACITOR TO DISCHARGE BEFORE PERFORMING FURTHER DIAGNOSIS OR SERVICE. THIS IS THE ONLY SURE WAY TO DISABLE THE SUPPLEMENTAL RESTRAINT SYSTEM. FAILURE TO TAKE THE PROPER PRECAUTIONS COULD RESULT IN ACCIDENTAL AIRBAG DEPLOYMENT.

WARNING: TO AVOID PERSONAL INJURY OR DEATH ON VEHICLES EQUIPPED WITH THE OCCUPANT CLASSIFICATION SYSTEM (OCS), ONLY THE OCCUPANT CLASSIFICATION MODULE (OCM) AND THE SEAT CUSHION TRIM MAY BE SERVICED SEPARATELY. ALL OTHER COMPONENTS OF THE PASSENGER SIDE FRONT SEAT CUSHION ASSEMBLY MUST BE SERVICED ONLY AS A COMPLETE FACTORY-CALIBRATED, ASSEMBLED AND TAMPER-EVIDENT SERVICE REPLACEMENT PACKAGE. THIS PACKAGE INCLUDES THE FRAME, SPRINGS, PAD, BLADDER, SENSOR, FOAM, WIRING AND A CALIBRATED OCM. WHEN INSTALLING THIS PACKAGE ALWAYS REPLACE ALL OF THE EXISTING COMPONENTS WITH THE NEW COMPONENTS AS A UNIT. DO NOT ATTEMPT TO SEPARATE OR DISCONNECT ANY OF THE NEW OCS COMPONENTS IN THE SERVICE REPLACEMENT PACKAGE FROM EACH OTHER, AND DO NOT ATTEMPT TO REUSE ANY OF THE REPLACED COMPONENTS IN THIS OR ANY OTHER VEHICLE. FAILURE TO TAKE THE PROPER PRECAUTIONS COULD RESULT IN FAILURE OF THE PASSENGER AIRBAG TO DEPLOY WHEN REQUIRED, OR IN PASSENGER AIRBAG DEPLOYMENT WHEN NOT REQUIRED.

FRONT SEAT CUSHION (Continued)

(1) Remove seat cushion side covers, and leave connector connected, if equipped. (Refer to 23 - BODY/SEATS/FRONT SEAT CUSHION SIDE COVER - REMOVAL)

(2) Remove seat track front and rear covers if equipped. (Refer to 23 - BODY/SEATS/SEAT TRACK REAR COVER - REMOVAL) and (Refer to 23 - BODY/SEATS/SEAT TRACK FRONT COVER - REMOVAL)

(3) If equipped, open storage bin to access front pan bolts.

(4) Remove bolts attaching seat cushion pan to seat track.

(5) Disconnect wire connectors, if equipment.

(6) Remove seat cushion from seat.

(7) Disengage J-strap retainers holding seat cover to cushion.

(8) Remove seat cushion pan from cover and pad.

INSTALLATION

A non-calibrated Occupant Classification Module (OCM) is the only component of the Occupant Classification System (OCS) that is available for separate service replacement, as outlined in the procedures that follow. The OCS components of the passenger side front seat cushion including the cushion frame, springs, pad, occupant detection bladder, pressure sensor, seat cushion foam and the OCM are a factory-calibrated and assembled unit. Once this unit is connected to a vehicle electrically, the calibration settings are uploaded from the OCM and stored in the memory of the Airbag Control Module (ACM). If only the OCM is subsequently replaced, the new, non-calibrated OCM learns the proper calibration settings from the ACM after it is connected to the vehicle electrically.

If any of the remaining OCS components of the passenger side front seat cushion require replacement, they are serviced only as a factory-calibrated, assembled, and tamper-evident service replacement package. This package includes the assembled frame, springs, pad, bladder, sensor, foam, wiring and a calibrated OCM. When installing this package, always replace all of the existing components with the new components as a unit. Do not attempt to separate or disconnect any of the new OCS components contained in the service replacement package from each other, and do not attempt to reuse any of the replaced components in this or any other vehicle.

Once any of the original factory-installed components except the OCM have been replaced with the service replacement package components, the OCM can only be serviced by replacing the entire passenger side front seat cushion unit with another complete service replacement package.

WARNING: TO AVOID PERSONAL INJURY OR DEATH, ON VEHICLES EQUIPPED WITH AIRBAGS, DISABLE THE SUPPLEMENTAL RESTRAINT SYSTEM BEFORE ATTEMPTING ANY STEERING WHEEL, STEERING COLUMN, AIRBAG, OCCUPANT CLASSIFICATION SYSTEM, SEAT BELT TENSIONER, IMPACT SENSOR, OR INSTRUMENT PANEL COMPONENT DIAGNOSIS OR SERVICE. DISCONNECT AND ISOLATE THE BATTERY NEGATIVE (GROUND) CABLE, THEN WAIT TWO MINUTES FOR THE SYSTEM CAPACITOR TO DISCHARGE BEFORE PERFORMING FURTHER DIAGNOSIS OR SERVICE. THIS IS THE ONLY SURE WAY TO DISABLE THE SUPPLEMENTAL RESTRAINT SYSTEM. FAILURE TO TAKE THE PROPER PRECAUTIONS COULD RESULT IN ACCIDENTAL AIRBAG DEPLOYMENT.

WARNING: TO AVOID PERSONAL INJURY OR DEATH ON VEHICLES EQUIPPED WITH THE OCCUPANT CLASSIFICATION SYSTEM (OCS), ONLY THE OCCUPANT CLASSIFICATION MODULE (OCM) AND THE SEAT CUSHION TRIM MAY BE SERVICED SEPARATELY. ALL OTHER COMPONENTS OF THE PASSENGER SIDE FRONT SEAT CUSHION ASSEMBLY MUST BE SERVICED ONLY AS A COMPLETE FACTORY-CALIBRATED, ASSEMBLED AND TAMPER-EVIDENT SERVICE REPLACEMENT PACKAGE. THIS PACKAGE INCLUDES THE FRAME, SPRINGS, PAD, BLADDER, SENSOR, FOAM, WIRING AND A CALIBRATED OCM. WHEN INSTALLING THIS PACKAGE ALWAYS REPLACE ALL OF THE EXISTING COMPONENTS WITH THE NEW COMPONENTS AS A UNIT. DO NOT ATTEMPT TO SEPARATE OR DISCONNECT ANY OF THE NEW OCS COMPONENTS IN THE SERVICE REPLACEMENT PACKAGE FROM EACH OTHER, AND DO NOT ATTEMPT TO REUSE ANY OF THE REPLACED COMPONENTS IN THIS OR ANY OTHER VEHICLE. FAILURE TO TAKE THE PROPER PRECAUTIONS COULD RESULT IN FAILURE OF THE PASSENGER AIRBAG TO DEPLOY WHEN REQUIRED, OR IN PASSENGER AIRBAG DEPLOYMENT WHEN NOT REQUIRED.

(1) Place seat cushion cover in position on seat cushion.

(2) Engage J-strap retainers to hold seat cover to cushion.

(3) Place seat cushion in position on seat.

(4) Connect wire connectors, if equipment.

(5) Install bolts attaching seat cushion to seat track. Tighten bolts to 28.5 N·m (21 ft. lbs.) torque.

(6) If equipped, close storage bin.

FRONT SEAT CUSHION (Continued)

(7) Install seat track front and rear covers, if equipped. (Refer to 23 - BODY/SEATS/SEAT TRACK REAR COVER - INSTALLATION) and (Refer to 23 - BODY/SEATS/SEAT TRACK FRONT COVER - INSTALLATION)

(8) Install seat cushion side covers. (Refer to 23 - BODY/SEATS/FRONT SEAT CUSHION SIDE COVER - INSTALLATION)

FRONT SEAT CUSHION - OCS

REMOVAL

A non-calibrated Occupant Classification Module (OCM) is the only component of the Occupant Classification System (OCS) that is available for separate service replacement, as outlined in the procedures that follow. The OCS components of the passenger side front seat cushion including the cushion frame, springs, pad, occupant detection bladder, pressure sensor, seat cushion foam and the OCM are a factory-calibrated and assembled unit. Once this unit is connected to a vehicle electrically, the calibration settings are uploaded from the OCM and stored in the memory of the Airbag Control Module (ACM). If only the OCM is subsequently replaced, the new, non-calibrated OCM learns the proper calibration settings from the ACM after it is connected to the vehicle electrically.

If any of the remaining OCS components of the passenger side front seat cushion require replacement, they are serviced only as a factory-calibrated, assembled, and tamper-evident service replacement package. This package includes the assembled frame, springs, pad, bladder, sensor, foam, wiring and a calibrated OCM. When installing this package, always replace all of the existing components with the new components as a unit. Do not attempt to separate or disconnect any of the new OCS components contained in the service replacement package from each other, and do not attempt to reuse any of the replaced components in this or any other vehicle.

Once any of the original factory-installed components except the OCM have been replaced with the service replacement package components, the OCM can only be serviced by replacing the entire passenger side front seat cushion unit with another complete service replacement package.

WARNING: TO AVOID PERSONAL INJURY OR DEATH, ON VEHICLES EQUIPPED WITH AIRBAGS, DISABLE THE SUPPLEMENTAL RESTRAINT SYSTEM BEFORE ATTEMPTING ANY STEERING WHEEL, STEERING COLUMN, AIRBAG, OCCUPANT CLASSIFICATION SYSTEM, SEAT BELT TENSIONER, IMPACT SENSOR, OR INSTRUMENT PANEL COMPONENT DIAGNOSIS OR SERVICE. DISCONNECT AND ISOLATE THE BATTERY NEGATIVE (GROUND) CABLE, THEN WAIT TWO MINUTES FOR THE SYSTEM CAPACITOR TO DISCHARGE BEFORE PERFORMING FURTHER DIAGNOSIS OR SERVICE. THIS IS THE ONLY SURE WAY TO DISABLE THE SUPPLEMENTAL RESTRAINT SYSTEM. FAILURE TO TAKE THE PROPER PRECAUTIONS COULD RESULT IN ACCIDENTAL AIRBAG DEPLOYMENT.

WARNING: TO AVOID PERSONAL INJURY OR DEATH ON VEHICLES EQUIPPED WITH THE OCCUPANT CLASSIFICATION SYSTEM (OCS), ONLY THE OCCUPANT CLASSIFICATION MODULE (OCM) AND THE SEAT CUSHION TRIM MAY BE SERVICED SEPARATELY. ALL OTHER COMPONENTS OF THE PASSENGER SIDE FRONT SEAT CUSHION ASSEMBLY MUST BE SERVICED ONLY AS A COMPLETE FACTORY-CALIBRATED, ASSEMBLED AND TAMPER-EVIDENT SERVICE REPLACEMENT PACKAGE. THIS PACKAGE INCLUDES THE FRAME, SPRINGS, PAD, BLADDER, SENSOR, FOAM, WIRING AND A CALIBRATED OCM. WHEN INSTALLING THIS PACKAGE ALWAYS REPLACE ALL OF THE EXISTING COMPONENTS WITH THE NEW COMPONENTS AS A UNIT. DO NOT ATTEMPT TO SEPARATE OR DISCONNECT ANY OF THE NEW OCS COMPONENTS IN THE SERVICE REPLACEMENT PACKAGE FROM EACH OTHER, AND DO NOT ATTEMPT TO REUSE ANY OF THE REPLACED COMPONENTS IN THIS OR ANY OTHER VEHICLE. FAILURE TO TAKE THE PROPER PRECAUTIONS COULD RESULT IN FAILURE OF THE PASSENGER AIRBAG TO DEPLOY WHEN REQUIRED, OR IN PASSENGER AIRBAG DEPLOYMENT WHEN NOT REQUIRED.

(1) Remove seat cushion side covers, and leave connector connected, if equipped. (Refer to 23 - BODY/SEATS/FRONT SEAT CUSHION SIDE COVER - REMOVAL)

(2) Remove seat track front and rear covers if equipped. (Refer to 23 - BODY/SEATS/SEAT TRACK REAR COVER - REMOVAL) and (Refer to 23 - BODY/SEATS/SEAT TRACK FRONT COVER - REMOVAL)

(3) If equipped, open storage bin to access front pan bolts.

(4) Remove bolts attaching seat cushion pan to seat track.

(5) Disconnect wire connectors, if equipment.

(6) Remove seat cushion from seat.

(7) Disengage J-strap retainers holding seat cover to cushion.

(8) Remove seat cushion pan from cover and pad.

FRONT SEAT CUSHION - OCS (Continued)

INSTALLATION

A non-calibrated Occupant Classification Module (OCM) is the only component of the Occupant Classification System (OCS) that is available for separate service replacement, as outlined in the procedures that follow. The OCS components of the passenger side front seat cushion including the cushion frame, springs, pad, occupant detection bladder, pressure sensor, seat cushion foam and the OCM are a factory-calibrated and assembled unit. Once this unit is connected to a vehicle electrically, the calibration settings are uploaded from the OCM and stored in the memory of the Airbag Control Module (ACM). If only the OCM is subsequently replaced, the new, non-calibrated OCM learns the proper calibration settings from the ACM after it is connected to the vehicle electrically.

If any of the remaining OCS components of the passenger side front seat cushion require replacement, they are serviced only as a factory-calibrated, assembled, and tamper-evident service replacement package. This package includes the assembled frame, springs, pad, bladder, sensor, foam, wiring and a calibrated OCM. When installing this package, always replace all of the existing components with the new components as a unit. Do not attempt to separate or disconnect any of the new OCS components contained in the service replacement package from each other, and do not attempt to reuse any of the replaced components in this or any other vehicle.

Once any of the original factory-installed components except the OCM have been replaced with the service replacement package components, the OCM can only be serviced by replacing the entire passenger side front seat cushion unit with another complete service replacement package.

WARNING: TO AVOID PERSONAL INJURY OR DEATH, ON VEHICLES EQUIPPED WITH AIRBAGS, DISABLE THE SUPPLEMENTAL RESTRAINT SYSTEM BEFORE ATTEMPTING ANY STEERING WHEEL, STEERING COLUMN, AIRBAG, OCCUPANT CLASSIFICATION SYSTEM, SEAT BELT TENSIONER, IMPACT SENSOR, OR INSTRUMENT PANEL COMPONENT DIAGNOSIS OR SERVICE. DISCONNECT AND ISOLATE THE BATTERY NEGATIVE (GROUND) CABLE, THEN WAIT TWO MINUTES FOR THE SYSTEM CAPACITOR TO DISCHARGE BEFORE PERFORMING FURTHER DIAGNOSIS OR SERVICE. THIS IS THE ONLY SURE WAY TO DISABLE THE SUPPLEMENTAL RESTRAINT SYSTEM. FAILURE TO TAKE THE PROPER PRECAUTIONS COULD RESULT IN ACCIDENTAL AIRBAG DEPLOYMENT.

WARNING: TO AVOID PERSONAL INJURY OR DEATH ON VEHICLES EQUIPPED WITH THE OCCUPANT CLASSIFICATION SYSTEM (OCS), ONLY THE OCCUPANT CLASSIFICATION MODULE (OCM) AND THE SEAT CUSHION TRIM MAY BE SERVICED SEPARATELY. ALL OTHER COMPONENTS OF THE PASSENGER SIDE FRONT SEAT CUSHION ASSEMBLY MUST BE SERVICED ONLY AS A COMPLETE FACTORY-CALIBRATED, ASSEMBLED AND TAMPER-EVIDENT SERVICE REPLACEMENT PACKAGE. THIS PACKAGE INCLUDES THE FRAME, SPRINGS, PAD, BLADDER, SENSOR, FOAM, WIRING AND A CALIBRATED OCM. WHEN INSTALLING THIS PACKAGE ALWAYS REPLACE ALL OF THE EXISTING COMPONENTS WITH THE NEW COMPONENTS AS A UNIT. DO NOT ATTEMPT TO SEPARATE OR DISCONNECT ANY OF THE NEW OCS COMPONENTS IN THE SERVICE REPLACEMENT PACKAGE FROM EACH OTHER, AND DO NOT ATTEMPT TO REUSE ANY OF THE REPLACED COMPONENTS IN THIS OR ANY OTHER VEHICLE. FAILURE TO TAKE THE PROPER PRECAUTIONS COULD RESULT IN FAILURE OF THE PASSENGER AIRBAG TO DEPLOY WHEN REQUIRED, OR IN PASSENGER AIRBAG DEPLOYMENT WHEN NOT REQUIRED.

(1) Place seat cushion cover in position on seat cushion.

(2) Engage J-strap retainers to hold seat cover to cushion.

(3) Place seat cushion in position on seat.

(4) Connect wire connectors, if equipment.

(5) Install bolts attaching seat cushion to seat track. Tighten bolts to 28.5 N·m (21 ft. lbs.) torque.

(6) If equipped, close storage bin.

(7) Install seat track front and rear covers, if equipped. (Refer to 23 - BODY/SEATS/SEAT TRACK REAR COVER - INSTALLATION) and (Refer to 23 - BODY/SEATS/SEAT TRACK FRONT COVER - INSTALLATION)

(8) Install seat cushion side covers. (Refer to 23 - BODY/SEATS/FRONT SEAT CUSHION SIDE COVER - INSTALLATION)

FRONT SEAT CUSHION SIDE COVER

REMOVAL

(1) Remove screws and plastic push pin attaching seat cushion side cover to bucket seat (Fig. 32).

(2) Disengage J-strap along rear of seat cushion to access screw.

(3) Remove screw attaching rear of side cover to seat cushion frame.

(4) Remove side cover from seat cushion.

(5) If equipped, disconnect wire connector from power seat switch (Fig. 33).

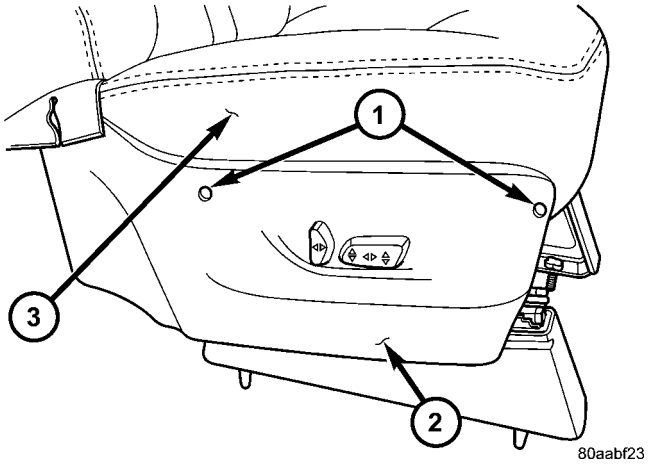

Fig. 32 FRONT SEAT SIDE SHIELD

1 - SCREWS
2 - SIDE SHIELD
3 - SEAT CUSHION

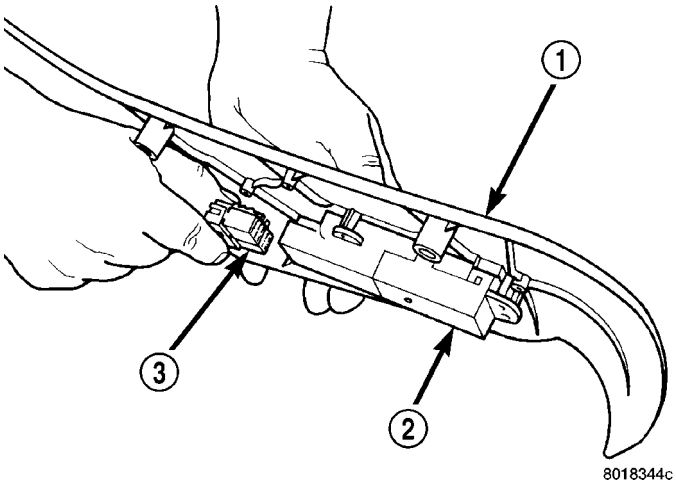

Fig. 33 POWER SEAT SWITCH WIRE CONNECTOR

1 - SEAT CUSHION SIDE COVER
2 - POWER SEAT SWITCH
3 - WIRE CONNECTOR

INSTALLATION

(1) Place side cover in position on seat cushion.

(2) If equipped, connect wire connector into power seat switch (Fig. 33).

(3) Install screw attaching rear of side cover to seat cushion frame. Tighten screw to 1 N·m (9 in. lbs.) torque.

(4) Engage J-strap along rear of seat cushion to access screw.

(5) Install screws attaching seat cushion side cover to bucket seat (Fig. 32).

FRONT SEAT CUSHION SIDE COVER - OCS

REMOVAL

WARNING: TO AVOID PERSONAL INJURY OR DEATH, ON VEHICLES EQUIPPED WITH AIRBAGS, DISABLE THE SUPPLEMENTAL RESTRAINT SYSTEM BEFORE ATTEMPTING ANY STEERING WHEEL, STEERING COLUMN, AIRBAG, OCCUPANT CLASSIFICATION SYSTEM, SEAT BELT TENSIONER, IMPACT SENSOR, OR INSTRUMENT PANEL COMPONENT DIAGNOSIS OR SERVICE. DISCONNECT AND ISOLATE THE BATTERY NEGATIVE (GROUND) CABLE, THEN WAIT TWO MINUTES FOR THE SYSTEM CAPACITOR TO DISCHARGE BEFORE PERFORMING FURTHER DIAGNOSIS OR SERVICE. THIS IS THE ONLY SURE WAY TO DISABLE THE SUPPLEMENTAL RESTRAINT SYSTEM. FAILURE TO TAKE THE PROPER PRECAUTIONS COULD RESULT IN ACCIDENTAL AIRBAG DEPLOYMENT.

WARNING: TO AVOID PERSONAL INJURY OR DEATH ON VEHICLES EQUIPPED WITH THE OCCUPANT CLASSIFICATION SYSTEM (OCS), ONLY THE OCCUPANT CLASSIFICATION MODULE (OCM) AND THE SEAT CUSHION TRIM MAY BE SERVICED SEPARATELY. ALL OTHER COMPONENTS OF THE PASSENGER SIDE FRONT SEAT CUSHION ASSEMBLY MUST BE SERVICED ONLY AS A COMPLETE FACTORY-CALIBRATED, ASSEMBLED AND TAMPER-EVIDENT SERVICE REPLACEMENT PACKAGE. THIS PACKAGE INCLUDES THE FRAME, SPRINGS, PAD, BLADDER, SENSOR, FOAM, WIRING AND A CALIBRATED OCM. WHEN INSTALLING THIS PACKAGE ALWAYS REPLACE ALL OF THE EXISTING COMPONENTS WITH THE NEW COMPONENTS AS A UNIT. DO NOT ATTEMPT TO SEPARATE OR DISCONNECT ANY OF THE NEW OCS COMPONENTS IN THE SERVICE REPLACEMENT PACKAGE FROM EACH OTHER, AND DO NOT ATTEMPT TO REUSE ANY OF THE REPLACED COMPONENTS IN THIS OR ANY OTHER VEHICLE. FAILURE TO TAKE THE PROPER PRECAUTIONS COULD RESULT IN FAILURE OF THE PASSENGER AIRBAG TO DEPLOY WHEN REQUIRED, OR IN PASSENGER AIRBAG DEPLOYMENT WHEN NOT REQUIRED.

(1) Remove screws and plastic push pin attaching seat cushion side cover to bucket seat (Fig. 34).

(2) Disengage J-strap along rear of seat cushion to access screw.

(3) Remove screw attaching rear of side cover to seat cushion frame.

FRONT SEAT CUSHION SIDE COVER - OCS (Continued)

(4) Remove side cover from seat cushion.

(5) If equipped, disconnect wire connector from power seat switch (Fig. 35).

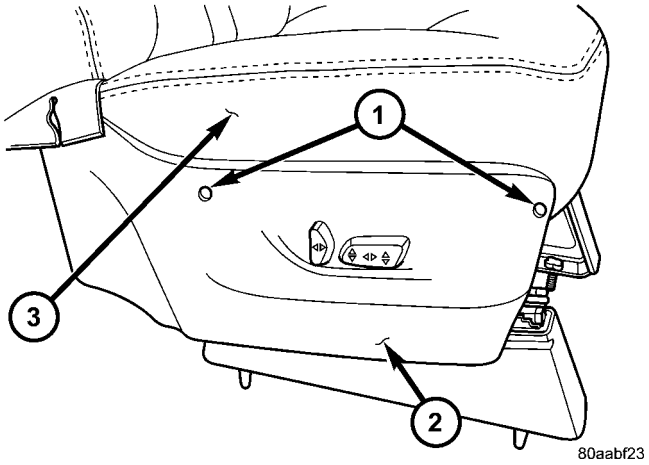

Fig. 34 FRONT SEAT SIDE SHIELD

1 - SCREWS
2 - SIDE SHIELD
3 - SEAT CUSHION

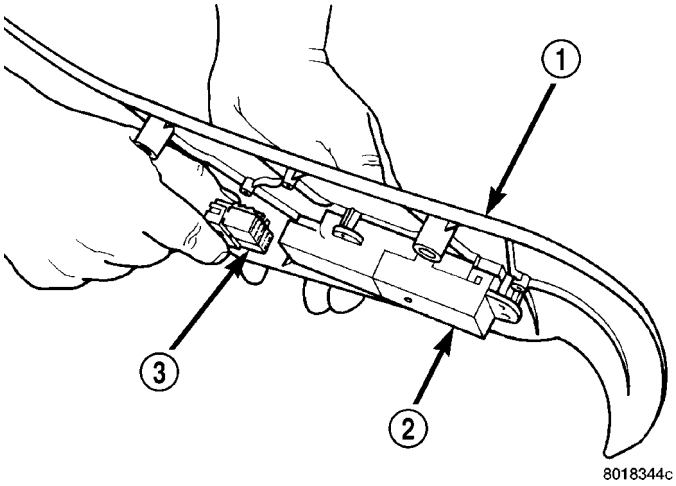

Fig. 35 POWER SEAT SWITCH WIRE CONNECTOR

1 - SEAT CUSHION SIDE COVER
2 - POWER SEAT SWITCH
3 - WIRE CONNECTOR

INSTALLATION

WARNING: TO AVOID PERSONAL INJURY OR DEATH, ON VEHICLES EQUIPPED WITH AIRBAGS, DISABLE THE SUPPLEMENTAL RESTRAINT SYSTEM BEFORE ATTEMPTING ANY STEERING WHEEL, STEERING COLUMN, AIRBAG, OCCUPANT CLASSIFICATION SYSTEM, SEAT BELT TENSIONER, IMPACT SENSOR, OR INSTRUMENT PANEL COMPONENT DIAGNOSIS OR SERVICE. DISCONNECT AND ISOLATE THE BATTERY NEGATIVE (GROUND) CABLE, THEN WAIT TWO MINUTES FOR THE SYSTEM CAPACITOR TO DISCHARGE BEFORE PERFORMING FURTHER DIAGNOSIS OR SERVICE. THIS IS THE ONLY SURE WAY TO DISABLE THE SUPPLEMENTAL RESTRAINT SYSTEM. FAILURE TO TAKE THE PROPER PRECAUTIONS COULD RESULT IN ACCIDENTAL AIRBAG DEPLOYMENT.

WARNING: TO AVOID PERSONAL INJURY OR DEATH ON VEHICLES EQUIPPED WITH THE OCCUPANT CLASSIFICATION SYSTEM (OCS), ONLY THE OCCUPANT CLASSIFICATION MODULE (OCM) AND THE SEAT CUSHION TRIM MAY BE SERVICED SEPARATELY. ALL OTHER COMPONENTS OF THE PASSENGER SIDE FRONT SEAT CUSHION ASSEMBLY MUST BE SERVICED ONLY AS A COMPLETE FACTORY-CALIBRATED, ASSEMBLED AND TAMPER-EVIDENT SERVICE REPLACEMENT PACKAGE. THIS PACKAGE INCLUDES THE FRAME, SPRINGS, PAD, BLADDER, SENSOR, FOAM, WIRING AND A CALIBRATED OCM. WHEN INSTALLING THIS PACKAGE ALWAYS REPLACE ALL OF THE EXISTING COMPONENTS WITH THE NEW COMPONENTS AS A UNIT. DO NOT ATTEMPT TO SEPARATE OR DISCONNECT ANY OF THE NEW OCS COMPONENTS IN THE SERVICE REPLACEMENT PACKAGE FROM EACH OTHER, AND DO NOT ATTEMPT TO REUSE ANY OF THE REPLACED COMPONENTS IN THIS OR ANY OTHER VEHICLE. FAILURE TO TAKE THE PROPER PRECAUTIONS COULD RESULT IN FAILURE OF THE PASSENGER AIRBAG TO DEPLOY WHEN REQUIRED, OR IN PASSENGER AIRBAG DEPLOYMENT WHEN NOT REQUIRED.

(1) Place side cover in position on seat cushion.

(2) If equipped, connect wire connector into power seat switch.

(3) Install screw attaching rear of side cover to seat cushion frame. Tighten screw to 1 N·m (9 in. lbs.) torque.

(4) Engage J-strap along rear of seat cushion to access screw.

(5) Install screws attaching seat cushion side cover to bucket seat (Fig. 34).

FRONT SEAT RISER - MANUAL - OCS

REMOVAL

WARNING: TO AVOID PERSONAL INJURY OR DEATH, ON VEHICLES EQUIPPED WITH AIRBAGS, DISABLE THE SUPPLEMENTAL RESTRAINT SYSTEM BEFORE ATTEMPTING ANY STEERING WHEEL, STEERING COLUMN, AIRBAG, OCCUPANT CLASSIFICATION SYSTEM, SEAT BELT TENSIONER, IMPACT SENSOR, OR INSTRUMENT PANEL COMPONENT DIAGNOSIS OR SERVICE. DISCONNECT AND ISOLATE THE BATTERY NEGATIVE (GROUND) CABLE, THEN WAIT TWO MINUTES FOR THE SYSTEM CAPACITOR TO DISCHARGE BEFORE PERFORMING FURTHER DIAGNOSIS OR SERVICE. THIS IS THE ONLY SURE WAY TO DISABLE THE SUPPLEMENTAL RESTRAINT SYSTEM. FAILURE TO TAKE THE PROPER PRECAUTIONS COULD RESULT IN ACCIDENTAL AIRBAG DEPLOYMENT.

WARNING: TO AVOID PERSONAL INJURY OR DEATH ON VEHICLES EQUIPPED WITH THE OCCUPANT CLASSIFICATION SYSTEM (OCS), ONLY THE OCCUPANT CLASSIFICATION MODULE (OCM) AND THE SEAT CUSHION TRIM MAY BE SERVICED SEPARATELY. ALL OTHER COMPONENTS OF THE PASSENGER SIDE FRONT SEAT CUSHION ASSEMBLY MUST BE SERVICED ONLY AS A COMPLETE FACTORY-CALIBRATED, ASSEMBLED AND TAMPER-EVIDENT SERVICE REPLACEMENT PACKAGE. THIS PACKAGE INCLUDES THE FRAME, SPRINGS, PAD, BLADDER, SENSOR, FOAM, WIRING AND A CALIBRATED OCM. WHEN INSTALLING THIS PACKAGE ALWAYS REPLACE ALL OF THE EXISTING COMPONENTS WITH THE NEW COMPONENTS AS A UNIT. DO NOT ATTEMPT TO SEPARATE OR DISCONNECT ANY OF THE NEW OCS COMPONENTS IN THE SERVICE REPLACEMENT PACKAGE FROM EACH OTHER, AND DO NOT ATTEMPT TO REUSE ANY OF THE REPLACED COMPONENTS IN THIS OR ANY OTHER VEHICLE. FAILURE TO TAKE THE PROPER PRECAUTIONS COULD RESULT IN FAILURE OF THE PASSENGER AIRBAG TO DEPLOY WHEN REQUIRED, OR IN PASSENGER AIRBAG DEPLOYMENT WHEN NOT REQUIRED.

(1) Remove seat from vehicle. (Refer to 23 - BODY/SEATS/FRONT SEAT - REMOVAL)

(2) Remove storage bin from riser. (Refer to 23 - BODY/SEATS/UNDER SEAT STORAGE BIN - REMOVAL)

(3) Remove nuts attaching riser to manual seat track (Fig. 36).

(4) Remove riser from seat.

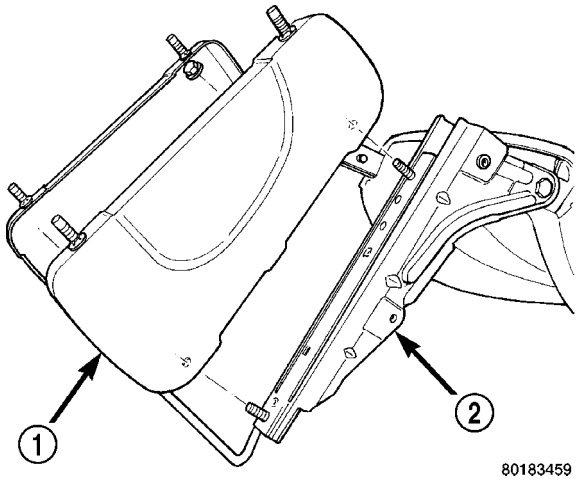

Fig. 36 FRONT SEAT RISER - MANUAL TRACK

1 - RISER
2 - SEAT TRACK

INSTALLATION

WARNING: TO AVOID PERSONAL INJURY OR DEATH, ON VEHICLES EQUIPPED WITH AIRBAGS, DISABLE THE SUPPLEMENTAL RESTRAINT SYSTEM BEFORE ATTEMPTING ANY STEERING WHEEL, STEERING COLUMN, AIRBAG, OCCUPANT CLASSIFICATION SYSTEM, SEAT BELT TENSIONER, IMPACT SENSOR, OR INSTRUMENT PANEL COMPONENT DIAGNOSIS OR SERVICE. DISCONNECT AND ISOLATE THE BATTERY NEGATIVE (GROUND) CABLE, THEN WAIT TWO MINUTES FOR THE SYSTEM CAPACITOR TO DISCHARGE BEFORE PERFORMING FURTHER DIAGNOSIS OR SERVICE. THIS IS THE ONLY SURE WAY TO DISABLE THE SUPPLEMENTAL RESTRAINT SYSTEM. FAILURE TO TAKE THE PROPER PRECAUTIONS COULD RESULT IN ACCIDENTAL AIRBAG DEPLOYMENT.

FRONT SEAT RISER - MANUAL - OCS (Continued)

WARNING: TO AVOID PERSONAL INJURY OR DEATH ON VEHICLES EQUIPPED WITH THE OCCUPANT CLASSIFICATION SYSTEM (OCS), ONLY THE OCCUPANT CLASSIFICATION MODULE (OCM) AND THE SEAT CUSHION TRIM MAY BE SERVICED SEPARATELY. ALL OTHER COMPONENTS OF THE PASSENGER SIDE FRONT SEAT CUSHION ASSEMBLY MUST BE SERVICED ONLY AS A COMPLETE FACTORY-CALIBRATED, ASSEMBLED AND TAMPER-EVIDENT SERVICE REPLACEMENT PACKAGE. THIS PACKAGE INCLUDES THE FRAME, SPRINGS, PAD, BLADDER, SENSOR, FOAM, WIRING AND A CALIBRATED OCM. WHEN INSTALLING THIS PACKAGE ALWAYS REPLACE ALL OF THE EXISTING COMPONENTS WITH THE NEW COMPONENTS AS A UNIT. DO NOT ATTEMPT TO SEPARATE OR DISCONNECT ANY OF THE NEW OCS COMPONENTS IN THE SERVICE REPLACEMENT PACKAGE FROM EACH OTHER, AND DO NOT ATTEMPT TO REUSE ANY OF THE REPLACED COMPONENTS IN THIS OR ANY OTHER VEHICLE. FAILURE TO TAKE THE PROPER PRECAUTIONS COULD RESULT IN FAILURE OF THE PASSENGER AIRBAG TO DEPLOY WHEN REQUIRED, OR IN PASSENGER AIRBAG DEPLOYMENT WHEN NOT REQUIRED.

(1) Place riser in position on seat.

(2) Install nuts attaching riser to manual seat track (Fig. 36). Tighten fasteners to 88 N·m (65 ft. lbs.) torque.

(3) If equipped, install storage bin into riser. (Refer to 23 - BODY/SEATS/UNDER SEAT STORAGE BIN - INSTALLATION)

(4) Install seat into vehicle. Tighten fasteners to 88 N·m (65 ft. lbs.) torque. (Refer to 23 - BODY/SEATS/FRONT SEAT - INSTALLATION)

FRONT SEAT TRACK POWER ADJUSTER

REMOVAL

The power seat track and motors are serviced as an assembly.

(1) Remove seat from vehicle. (Refer to 23 - BODY/SEATS/FRONT SEAT - REMOVAL)

(2) Remove seat cushion. (Refer to 23 - BODY/SEATS/FRONT/QUAD SEAT CUSHION - REMOVAL)

(3) Remove nut attaching recliner to seat back frame.

(4) Remove bolts attaching seat back frame to seat track.

(5) Remove stud on seat back frame from recliner.

(6) Remove seat back.

(7) If power seat track is being replaced, transfer power recliner, wire harness and trim covers to replacement seat track.

INSTALLATION

The power seat track and motors are serviced as an assembly.

(1) Install wire harness.

(2) Place seat back in position.

(3) Insert stud on seat back frame into recliner.

(4) Install bolts to hold seat back frame to seat track.

(5) Install nut attaching recliner to seat back frame.

(6) Install seat cushion. (Refer to 23 - BODY/SEATS/FRONT/QUAD SEAT CUSHION - INSTALLATION)

(7) Install seat in vehicle. Tighten fasteners to 60 N·m (44 ft. lbs.) torque. (Refer to 23 - BODY/SEATS/FRONT SEAT - INSTALLATION)

FRONT SEAT TRACK ADJUSTER/POWER - OCS

REMOVAL

WARNING: TO AVOID PERSONAL INJURY OR DEATH, ON VEHICLES EQUIPPED WITH AIRBAGS, DISABLE THE SUPPLEMENTAL RESTRAINT SYSTEM BEFORE ATTEMPTING ANY STEERING WHEEL, STEERING COLUMN, AIRBAG, OCCUPANT CLASSIFICATION SYSTEM, SEAT BELT TENSIONER, IMPACT SENSOR, OR INSTRUMENT PANEL COMPONENT DIAGNOSIS OR SERVICE. DISCONNECT AND ISOLATE THE BATTERY NEGATIVE (GROUND) CABLE, THEN WAIT TWO MINUTES FOR THE SYSTEM CAPACITOR TO DISCHARGE BEFORE PERFORMING FURTHER DIAGNOSIS OR SERVICE. THIS IS THE ONLY SURE WAY TO DISABLE THE SUPPLEMENTAL RESTRAINT SYSTEM. FAILURE TO TAKE THE PROPER PRECAUTIONS COULD RESULT IN ACCIDENTAL AIRBAG DEPLOYMENT.

FRONT SEAT TRACK ADJUSTER/POWER - OCS (Continued)

WARNING: TO AVOID PERSONAL INJURY OR DEATH ON VEHICLES EQUIPPED WITH THE OCCUPANT CLASSIFICATION SYSTEM (OCS), ONLY THE OCCUPANT CLASSIFICATION MODULE (OCM) AND THE SEAT CUSHION TRIM MAY BE SERVICED SEPARATELY. ALL OTHER COMPONENTS OF THE PASSENGER SIDE FRONT SEAT CUSHION ASSEMBLY MUST BE SERVICED ONLY AS A COMPLETE FACTORY-CALIBRATED, ASSEMBLED AND TAMPER-EVIDENT SERVICE REPLACEMENT PACKAGE. THIS PACKAGE INCLUDES THE FRAME, SPRINGS, PAD, BLADDER, SENSOR, FOAM, WIRING AND A CALIBRATED OCM. WHEN INSTALLING THIS PACKAGE ALWAYS REPLACE ALL OF THE EXISTING COMPONENTS WITH THE NEW COMPONENTS AS A UNIT. DO NOT ATTEMPT TO SEPARATE OR DISCONNECT ANY OF THE NEW OCS COMPONENTS IN THE SERVICE REPLACEMENT PACKAGE FROM EACH OTHER, AND DO NOT ATTEMPT TO REUSE ANY OF THE REPLACED COMPONENTS IN THIS OR ANY OTHER VEHICLE. FAILURE TO TAKE THE PROPER PRECAUTIONS COULD RESULT IN FAILURE OF THE PASSENGER AIRBAG TO DEPLOY WHEN REQUIRED, OR IN PASSENGER AIRBAG DEPLOYMENT WHEN NOT REQUIRED.

The power seat track and motors are serviced as an assembly.

(1) Remove seat from vehicle. (Refer to 23 - BODY/SEATS/FRONT SEAT - REMOVAL)

(2) Remove seat cushion. (Refer to 23 - BODY/SEATS/FRONT/QUAD SEAT CUSHION - REMOVAL)

(3) Remove nut attaching recliner to seat back frame.

(4) Remove bolts attaching seat back frame to seat track.

(5) Remove stud on seat back frame from recliner.

(6) Remove seat back.

(7) If power seat track is being replaced, transfer power recliner, wire harness and trim covers to replacement seat track.

INSTALLATION

WARNING: TO AVOID PERSONAL INJURY OR DEATH, ON VEHICLES EQUIPPED WITH AIRBAGS, DISABLE THE SUPPLEMENTAL RESTRAINT SYSTEM BEFORE ATTEMPTING ANY STEERING WHEEL, STEERING COLUMN, AIRBAG, OCCUPANT CLASSIFICATION SYSTEM, SEAT BELT TENSIONER, IMPACT SENSOR, OR INSTRUMENT PANEL COMPONENT DIAGNOSIS OR SERVICE. DISCONNECT AND ISOLATE THE BATTERY NEGATIVE (GROUND) CABLE, THEN WAIT TWO MINUTES FOR THE SYSTEM CAPACITOR TO DISCHARGE BEFORE PERFORMING FURTHER DIAGNOSIS OR SERVICE. THIS IS THE ONLY SURE WAY TO DISABLE THE SUPPLEMENTAL RESTRAINT SYSTEM. FAILURE TO TAKE THE PROPER PRECAUTIONS COULD RESULT IN ACCIDENTAL AIRBAG DEPLOYMENT.

WARNING: TO AVOID PERSONAL INJURY OR DEATH ON VEHICLES EQUIPPED WITH THE OCCUPANT CLASSIFICATION SYSTEM (OCS), ONLY THE OCCUPANT CLASSIFICATION MODULE (OCM) AND THE SEAT CUSHION TRIM MAY BE SERVICED SEPARATELY. ALL OTHER COMPONENTS OF THE PASSENGER SIDE FRONT SEAT CUSHION ASSEMBLY MUST BE SERVICED ONLY AS A COMPLETE FACTORY-CALIBRATED, ASSEMBLED AND TAMPER-EVIDENT SERVICE REPLACEMENT PACKAGE. THIS PACKAGE INCLUDES THE FRAME, SPRINGS, PAD, BLADDER, SENSOR, FOAM, WIRING AND A CALIBRATED OCM. WHEN INSTALLING THIS PACKAGE ALWAYS REPLACE ALL OF THE EXISTING COMPONENTS WITH THE NEW COMPONENTS AS A UNIT. DO NOT ATTEMPT TO SEPARATE OR DISCONNECT ANY OF THE NEW OCS COMPONENTS IN THE SERVICE REPLACEMENT PACKAGE FROM EACH OTHER, AND DO NOT ATTEMPT TO REUSE ANY OF THE REPLACED COMPONENTS IN THIS OR ANY OTHER VEHICLE. FAILURE TO TAKE THE PROPER PRECAUTIONS COULD RESULT IN FAILURE OF THE PASSENGER AIRBAG TO DEPLOY WHEN REQUIRED, OR IN PASSENGER AIRBAG DEPLOYMENT WHEN NOT REQUIRED.

The power seat track and motors are serviced as an assembly.

(1) Install wire harness.

(2) Place seat back in position.

(3) Insert stud on seat back frame into recliner.

(4) Install bolts to hold seat back frame to seat track.

(5) Install nut attaching recliner to seat back frame.

(6) Install seat cushion. (Refer to 23 - BODY/SEATS/FRONT/QUAD SEAT CUSHION - INSTALLATION)

(7) Install seat in vehicle. Tighten fasteners to 88 N·m (65 ft. lbs.) torque. (Refer to 23 - BODY/SEATS/FRONT SEAT - INSTALLATION)

FRONT SEAT TRACK MANUAL ADJUSTER

REMOVAL

(1) Remove seat from vehicle. (Refer to 23 - BODY/SEATS/FRONT SEAT - REMOVAL)

FRONT SEAT TRACK MANUAL ADJUSTER (Continued)

(2) Remove seat cushion. (Refer to 23 - BODY/SEATS/FRONT/QUAD SEAT CUSHION - REMOVAL)

(3) Remove riser. (Refer to 23 - BODY/SEATS/FRONT SEAT RISER - MANUAL TRACK - REMOVAL)

(4) Remove bolt attaching seat back frame to seat track (Fig. 37).

(5) Remove seat track from seat adjuster handle (Fig. 38).

(6) Remove seat track from seat.

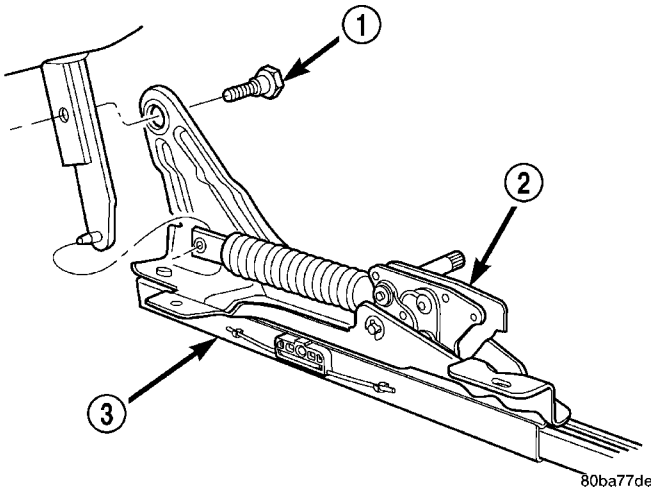

Fig. 37 FRONT SEAT TRACK - MANUAL

1 - SHOULDER BOLT
2 - RECLINER
3 - MANUAL SEAT TRACK

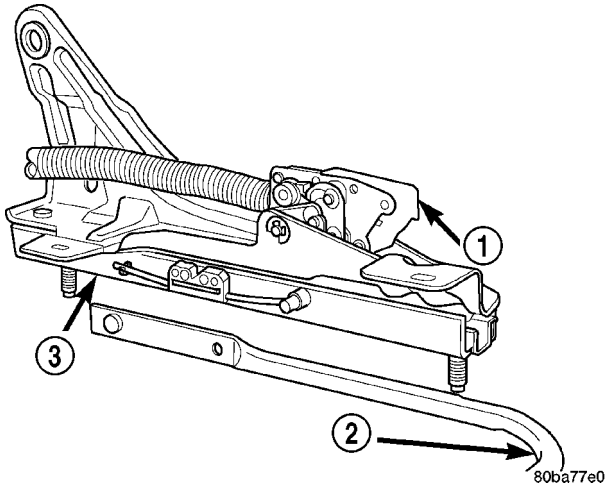

Fig. 38 FRONT SEAT TRACK ADJUSTER HANDLE

1 - RECLINER
2 - SEAT ADJUSTER HANDLE
3 - MANUAL SEAT TRACK

INSTALLATION

(1) Place seat track in position on seat.

(2) Place adjuster handle in position on seat track (Fig. 40).

(3) Insert stud on seat back frame into recliner.

(4) Install bolt attaching seat back frame to seat track (Fig. 39).

(5) Install riser. (Refer to 23 - BODY/SEATS/FRONT SEAT RISER - MANUAL TRACK - INSTALLATION)

(6) Install seat cushion. (Refer to 23 - BODY/SEATS/FRONT/QUAD SEAT CUSHION - INSTALLATION)

(7) Install seat in vehicle. (Refer to 23 - BODY/SEATS/FRONT SEAT - INSTALLATION)

FRONT SEAT TRACK ADJUSTER/MANUAL - OCS

REMOVAL

WARNING: TO AVOID PERSONAL INJURY OR DEATH, ON VEHICLES EQUIPPED WITH AIRBAGS, DISABLE THE SUPPLEMENTAL RESTRAINT SYSTEM BEFORE ATTEMPTING ANY STEERING WHEEL, STEERING COLUMN, AIRBAG, OCCUPANT CLASSIFICATION SYSTEM, SEAT BELT TENSIONER, IMPACT SENSOR, OR INSTRUMENT PANEL COMPONENT DIAGNOSIS OR SERVICE. DISCONNECT AND ISOLATE THE BATTERY NEGATIVE (GROUND) CABLE, THEN WAIT TWO MINUTES FOR THE SYSTEM CAPACITOR TO DISCHARGE BEFORE PERFORMING FURTHER DIAGNOSIS OR SERVICE. THIS IS THE ONLY SURE WAY TO DISABLE THE SUPPLEMENTAL RESTRAINT SYSTEM. FAILURE TO TAKE THE PROPER PRECAUTIONS COULD RESULT IN ACCIDENTAL AIRBAG DEPLOYMENT.

FRONT SEAT TRACK ADJUSTER/MANUAL - OCS (Continued)

WARNING: TO AVOID PERSONAL INJURY OR DEATH ON VEHICLES EQUIPPED WITH THE OCCUPANT CLASSIFICATION SYSTEM (OCS), ONLY THE OCCUPANT CLASSIFICATION MODULE (OCM) AND THE SEAT CUSHION TRIM MAY BE SERVICED SEPARATELY. ALL OTHER COMPONENTS OF THE PASSENGER SIDE FRONT SEAT CUSHION ASSEMBLY MUST BE SERVICED ONLY AS A COMPLETE FACTORY-CALIBRATED, ASSEMBLED AND TAMPER-EVIDENT SERVICE REPLACEMENT PACKAGE. THIS PACKAGE INCLUDES THE FRAME, SPRINGS, PAD, BLADDER, SENSOR, FOAM, WIRING AND A CALIBRATED OCM. WHEN INSTALLING THIS PACKAGE ALWAYS REPLACE ALL OF THE EXISTING COMPONENTS WITH THE NEW COMPONENTS AS A UNIT. DO NOT ATTEMPT TO SEPARATE OR DISCONNECT ANY OF THE NEW OCS COMPONENTS IN THE SERVICE REPLACEMENT PACKAGE FROM EACH OTHER, AND DO NOT ATTEMPT TO REUSE ANY OF THE REPLACED COMPONENTS IN THIS OR ANY OTHER VEHICLE. FAILURE TO TAKE THE PROPER PRECAUTIONS COULD RESULT IN FAILURE OF THE PASSENGER AIRBAG TO DEPLOY WHEN REQUIRED, OR IN PASSENGER AIRBAG DEPLOYMENT WHEN NOT REQUIRED.

(1) Remove seat from vehicle. (Refer to 23 - BODY/SEATS/FRONT SEAT - REMOVAL)

(2) Remove seat cushion. (Refer to 23 - BODY/SEATS/FRONT/QUAD SEAT CUSHION - REMOVAL)

(3) Remove riser. (Refer to 23 - BODY/SEATS/FRONT SEAT RISER - MANUAL TRACK - REMOVAL)

(4) Remove bolt attaching seat back frame to seat track (Fig. 39).

(5) Remove seat track from seat adjuster handle (Fig. 40).

(6) Remove seat track from seat.

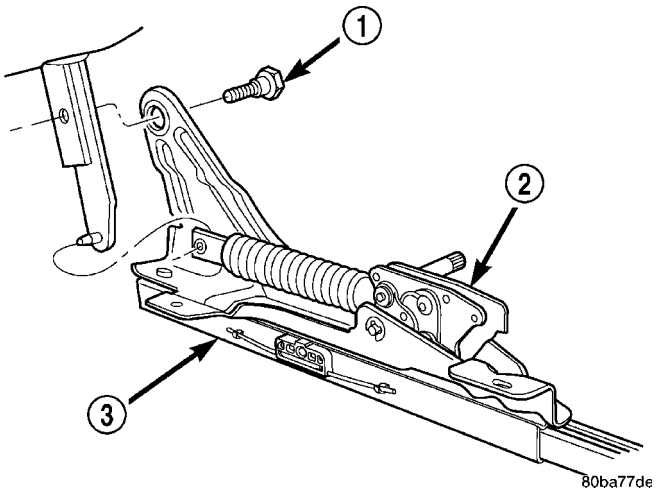

Fig. 39 FRONT SEAT TRACK - MANUAL

1 - SHOULDER BOLT
2 - RECLINER
3 - MANUAL SEAT TRACK

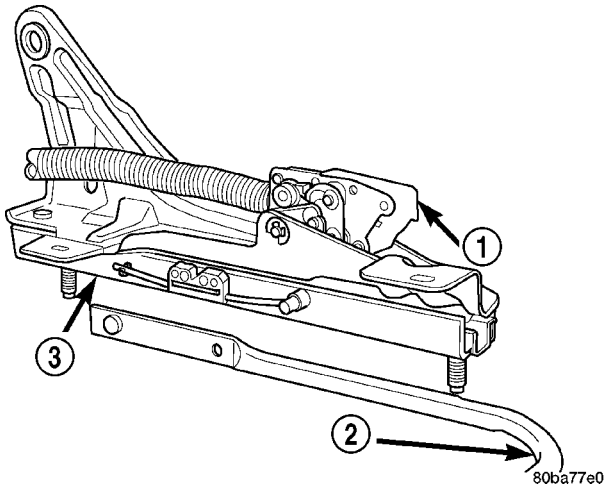

Fig. 40 FRONT SEAT TRACK ADJUSTER HANDLE

1 - RECLINER
2 - SEAT ADJUSTER HANDLE
3 - MANUAL SEAT TRACK

FRONT SEAT TRACK ADJUSTER/MANUAL - OCS (Continued)

INSTALLATION

WARNING: TO AVOID PERSONAL INJURY OR DEATH, ON VEHICLES EQUIPPED WITH AIRBAGS, DISABLE THE SUPPLEMENTAL RESTRAINT SYSTEM BEFORE ATTEMPTING ANY STEERING WHEEL, STEERING COLUMN, AIRBAG, OCCUPANT CLASSIFICATION SYSTEM, SEAT BELT TENSIONER, IMPACT SENSOR, OR INSTRUMENT PANEL COMPONENT DIAGNOSIS OR SERVICE. DISCONNECT AND ISOLATE THE BATTERY NEGATIVE (GROUND) CABLE, THEN WAIT TWO MINUTES FOR THE SYSTEM CAPACITOR TO DISCHARGE BEFORE PERFORMING FURTHER DIAGNOSIS OR SERVICE. THIS IS THE ONLY SURE WAY TO DISABLE THE SUPPLEMENTAL RESTRAINT SYSTEM. FAILURE TO TAKE THE PROPER PRECAUTIONS COULD RESULT IN ACCIDENTAL AIRBAG DEPLOYMENT.

WARNING: TO AVOID PERSONAL INJURY OR DEATH ON VEHICLES EQUIPPED WITH THE OCCUPANT CLASSIFICATION SYSTEM (OCS), ONLY THE OCCUPANT CLASSIFICATION MODULE (OCM) AND THE SEAT CUSHION TRIM MAY BE SERVICED SEPARATELY. ALL OTHER COMPONENTS OF THE PASSENGER SIDE FRONT SEAT CUSHION ASSEMBLY MUST BE SERVICED ONLY AS A COMPLETE FACTORY-CALIBRATED, ASSEMBLED AND TAMPER-EVIDENT SERVICE REPLACEMENT PACKAGE. THIS PACKAGE INCLUDES THE FRAME, SPRINGS, PAD, BLADDER, SENSOR, FOAM, WIRING AND A CALIBRATED OCM. WHEN INSTALLING THIS PACKAGE ALWAYS REPLACE ALL OF THE EXISTING COMPONENTS WITH THE NEW COMPONENTS AS A UNIT. DO NOT ATTEMPT TO SEPARATE OR DISCONNECT ANY OF THE NEW OCS COMPONENTS IN THE SERVICE REPLACEMENT PACKAGE FROM EACH OTHER, AND DO NOT ATTEMPT TO REUSE ANY OF THE REPLACED COMPONENTS IN THIS OR ANY OTHER VEHICLE. FAILURE TO TAKE THE PROPER PRECAUTIONS COULD RESULT IN FAILURE OF THE PASSENGER AIRBAG TO DEPLOY WHEN REQUIRED, OR IN PASSENGER AIRBAG DEPLOYMENT WHEN NOT REQUIRED.

(1) Place seat track in position on seat.

(2) Place adjuster handle in position on seat track (Fig. 40).

(3) Insert stud on seat back frame into recliner.

(4) Install bolt attaching seat back frame to seat track (Fig. 39).

(5) Install riser. (Refer to 23 - BODY/SEATS/FRONT SEAT RISER - MANUAL TRACK - INSTALLATION)

(6) Install seat cushion. (Refer to 23 - BODY/SEATS/FRONT/QUAD SEAT CUSHION - INSTALLATION)

(7) Install seat in vehicle. (Refer to 23 - BODY/SEATS/FRONT SEAT - INSTALLATION)

FRONT SEAT TRACK - REAR COVER

REMOVAL

(1) Disengage arrowhead retainer from loop strip attaching rear cover to power seat track crossbar (Fig. 41).

(2) Disengage fasteners attaching rear cover to slots on power seat track.

(3) Remove rear cover from seat.

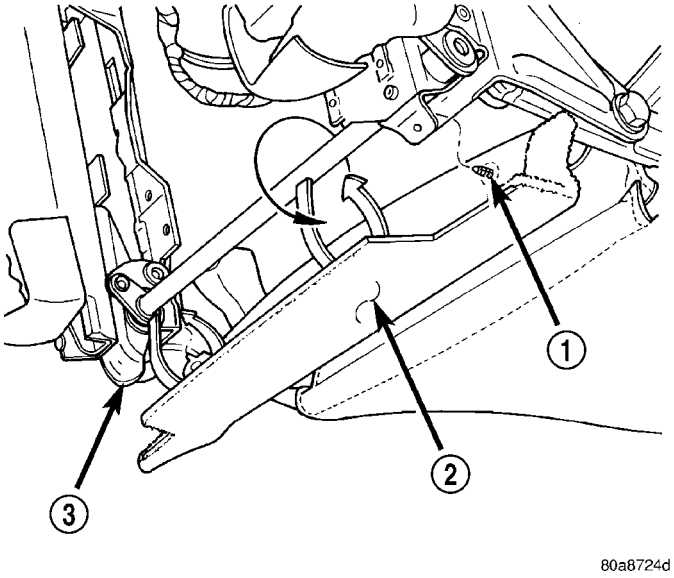

Fig. 41 FRONT POWER SEAT TRACK - REAR COVER

1 - PUSH IN FASTENER
2 - POWER SEAT TRACK REAR COVER
3 - POWER SEAT TRACK

INSTALLATION

(1) Place rear cover in position on seat.

(2) Engage fasteners attaching rear cover to slots on power seat track.

(3) Engage arrowhead retainer into loop strip attaching rear cover to power seat track crossbar (Fig. 41).

FRONT SEAT TRACK REAR COVER - OCS

REMOVAL

WARNING: TO AVOID PERSONAL INJURY OR DEATH, ON VEHICLES EQUIPPED WITH AIRBAGS, DISABLE THE SUPPLEMENTAL RESTRAINT SYSTEM BEFORE ATTEMPTING ANY STEERING WHEEL, STEERING COLUMN, AIRBAG, OCCUPANT CLASSIFICATION SYSTEM, SEAT BELT TENSIONER, IMPACT SENSOR, OR INSTRUMENT PANEL COMPONENT DIAGNOSIS OR SERVICE. DISCONNECT AND ISOLATE THE BATTERY NEGATIVE (GROUND) CABLE, THEN WAIT TWO MINUTES FOR THE SYSTEM CAPACITOR TO DISCHARGE BEFORE PERFORMING FURTHER DIAGNOSIS OR SERVICE. THIS IS THE ONLY SURE WAY TO DISABLE THE SUPPLEMENTAL RESTRAINT SYSTEM. FAILURE TO TAKE THE PROPER PRECAUTIONS COULD RESULT IN ACCIDENTAL AIRBAG DEPLOYMENT.

WARNING: TO AVOID PERSONAL INJURY OR DEATH ON VEHICLES EQUIPPED WITH THE OCCUPANT CLASSIFICATION SYSTEM (OCS), ONLY THE OCCUPANT CLASSIFICATION MODULE (OCM) AND THE SEAT CUSHION TRIM MAY BE SERVICED SEPARATELY. ALL OTHER COMPONENTS OF THE PASSENGER SIDE FRONT SEAT CUSHION ASSEMBLY MUST BE SERVICED ONLY AS A COMPLETE FACTORY-CALIBRATED, ASSEMBLED AND TAMPER-EVIDENT SERVICE REPLACEMENT PACKAGE. THIS PACKAGE INCLUDES THE FRAME, SPRINGS, PAD, BLADDER, SENSOR, FOAM, WIRING AND A CALIBRATED OCM. WHEN INSTALLING THIS PACKAGE ALWAYS REPLACE ALL OF THE EXISTING COMPONENTS WITH THE NEW COMPONENTS AS A UNIT. DO NOT ATTEMPT TO SEPARATE OR DISCONNECT ANY OF THE NEW OCS COMPONENTS IN THE SERVICE REPLACEMENT PACKAGE FROM EACH OTHER, AND DO NOT ATTEMPT TO REUSE ANY OF THE REPLACED COMPONENTS IN THIS OR ANY OTHER VEHICLE. FAILURE TO TAKE THE PROPER PRECAUTIONS COULD RESULT IN FAILURE OF THE PASSENGER AIRBAG TO DEPLOY WHEN REQUIRED, OR IN PASSENGER AIRBAG DEPLOYMENT WHEN NOT REQUIRED.

(1) Disengage arrowhead retainer from loop strip attaching rear cover to power seat track crossbar (Fig. 42).

(2) Disengage fasteners attaching rear cover to slots on power seat track.

(3) Remove rear cover from seat.

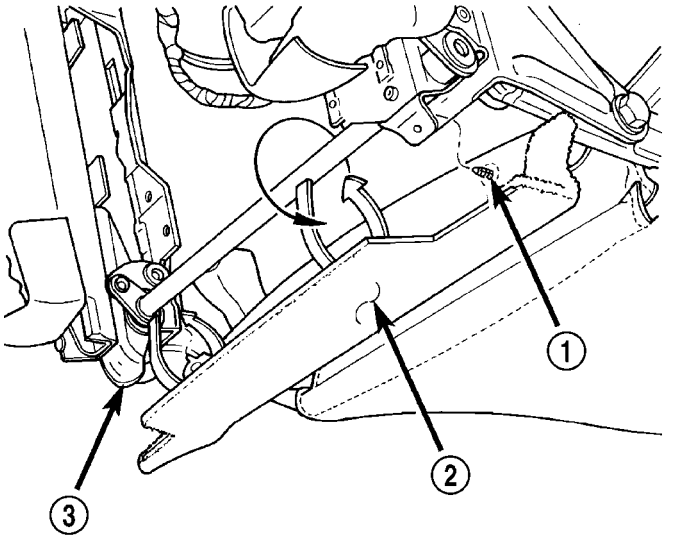

Fig. 42 FRONT POWER SEAT TRACK - REAR COVER

1 - PUSH IN FASTENER
2 - POWER SEAT TRACK REAR COVER
3 - POWER SEAT TRACK

INSTALLATION

WARNING: TO AVOID PERSONAL INJURY OR DEATH, ON VEHICLES EQUIPPED WITH AIRBAGS, DISABLE THE SUPPLEMENTAL RESTRAINT SYSTEM BEFORE ATTEMPTING ANY STEERING WHEEL, STEERING COLUMN, AIRBAG, OCCUPANT CLASSIFICATION SYSTEM, SEAT BELT TENSIONER, IMPACT SENSOR, OR INSTRUMENT PANEL COMPONENT DIAGNOSIS OR SERVICE. DISCONNECT AND ISOLATE THE BATTERY NEGATIVE (GROUND) CABLE, THEN WAIT TWO MINUTES FOR THE SYSTEM CAPACITOR TO DISCHARGE BEFORE PERFORMING FURTHER DIAGNOSIS OR SERVICE. THIS IS THE ONLY SURE WAY TO DISABLE THE SUPPLEMENTAL RESTRAINT SYSTEM. FAILURE TO TAKE THE PROPER PRECAUTIONS COULD RESULT IN ACCIDENTAL AIRBAG DEPLOYMENT.

FRONT SEAT TRACK REAR COVER - OCS (Continued)

WARNING: TO AVOID PERSONAL INJURY OR DEATH ON VEHICLES EQUIPPED WITH THE OCCUPANT CLASSIFICATION SYSTEM (OCS), ONLY THE OCCUPANT CLASSIFICATION MODULE (OCM) AND THE SEAT CUSHION TRIM MAY BE SERVICED SEPARATELY. ALL OTHER COMPONENTS OF THE PASSENGER SIDE FRONT SEAT CUSHION ASSEMBLY MUST BE SERVICED ONLY AS A COMPLETE FACTORY-CALIBRATED, ASSEMBLED AND TAMPER-EVIDENT SERVICE REPLACEMENT PACKAGE. THIS PACKAGE INCLUDES THE FRAME, SPRINGS, PAD, BLADDER, SENSOR, FOAM, WIRING AND A CALIBRATED OCM. WHEN INSTALLING THIS PACKAGE ALWAYS REPLACE ALL OF THE EXISTING COMPONENTS WITH THE NEW COMPONENTS AS A UNIT. DO NOT ATTEMPT TO SEPARATE OR DISCONNECT ANY OF THE NEW OCS COMPONENTS IN THE SERVICE REPLACEMENT PACKAGE FROM EACH OTHER, AND DO NOT ATTEMPT TO REUSE ANY OF THE REPLACED COMPONENTS IN THIS OR ANY OTHER VEHICLE. FAILURE TO TAKE THE PROPER PRECAUTIONS COULD RESULT IN FAILURE OF THE PASSENGER AIRBAG TO DEPLOY WHEN REQUIRED, OR IN PASSENGER AIRBAG DEPLOYMENT WHEN NOT REQUIRED.

(1) Place rear cover in position on seat.
(2) Engage fasteners attaching rear cover to slots on power seat track.
(3) Engage arrowhead retainer into loop strip attaching rear cover to power seat track crossbar (Fig. 42).

ARMREST - SECOND ROW - FOLD-IN-FLOOR

REMOVAL

(1) Remove armrest plug with a small flat bladed tool (Fig. 43).
(2) Remove attaching screw.
(3) Remove armrest from seat back.

INSTALLATION

(1) Place armrest into position (Fig. 43).
(2) Install attaching screw.
(3) Install armrest plug.

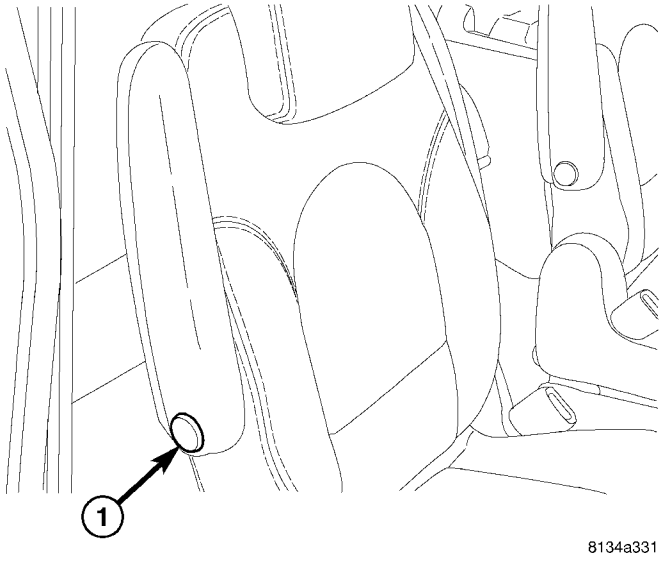

Fig. 43 SECOND ROW SEAT ARMREST

1 - ARMREST PLUG

ARMREST ROTATING ASSEMBLY - SECOND ROW - FOLD-IN-FLOOR

REMOVAL

(1) Remove headrest and headrest sleeves. (Refer to 23 - BODY/SEATS/HEADREST SLEEVE - REMOVAL).
(2) Remove both armrest. (Refer to 23 - BODY/SEATS/ARMREST - REMOVAL).
(3) Remove seat back panel. (Refer to 23 - BODY/SEATS/SEAT BACK - REMOVAL).
(4) Disengage J-strap from seat back (Fig. 44).
(5) Move seat back cover and foam to access the armrest rotating assembly.
(6) Remove armrest rotating assembly attaching screws (Fig. 45).
(7) Remove armrest rotating assembly from the seat back frame.

INSTALLATION

(1) Place armrest rotating assembly into position (Fig. 45).
(2) Install two armrest rotating assembly attaching screws.
(3) Move seat back cover and foam to into proper position and engage J-straps (Fig. 44).
(4) Install seat back panel. (Refer to 23 - BODY/SEATS/SEAT BACK - INSTALLATION).
(5) Install both armrest. (Refer to 23 - BODY/SEATS/ARMREST - INSTALLATION).

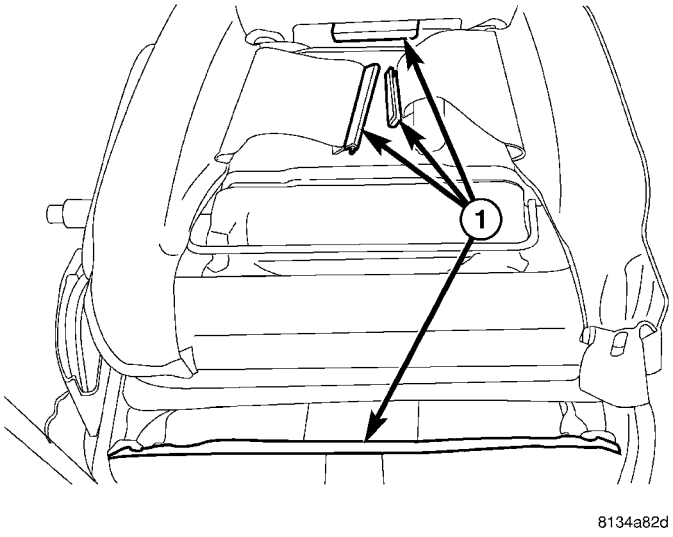

Fig. 44 SECOND ROW SEAT BACK

1 - J-STRAPS

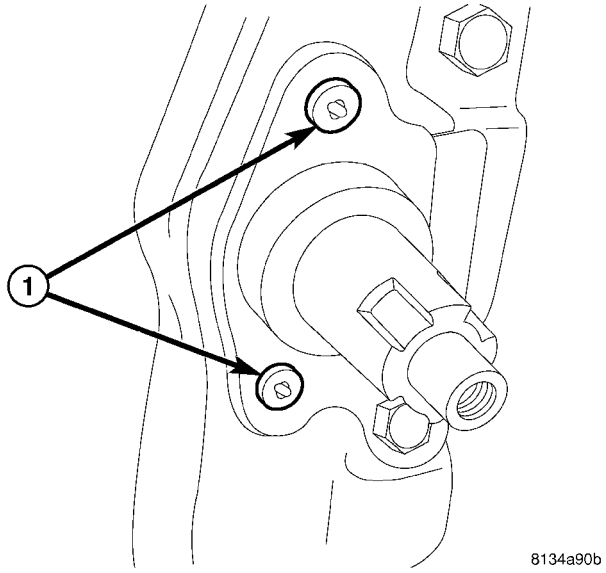

Fig. 45 SECOND ROW ARMREST ROTATING ASSEMBLY

1 - ATTACHING SCREWS

(6) Install headrest sleeves and headrest. (Refer to 23 - BODY/SEATS/HEADREST SLEEVE - INSTALLATION).

HEADREST SLEEVE - SECOND ROW - FOLD-IN-FLOOR

REMOVAL

(1) Remove headrest (Fig. 46).

(2) Using a trim tool remove sleeve by prying sleeve away from the seat back frame to unlock it (Fig. 47).

(3) Pull headrest sleeve upward and out the top of the seat back frame and remove from seat.

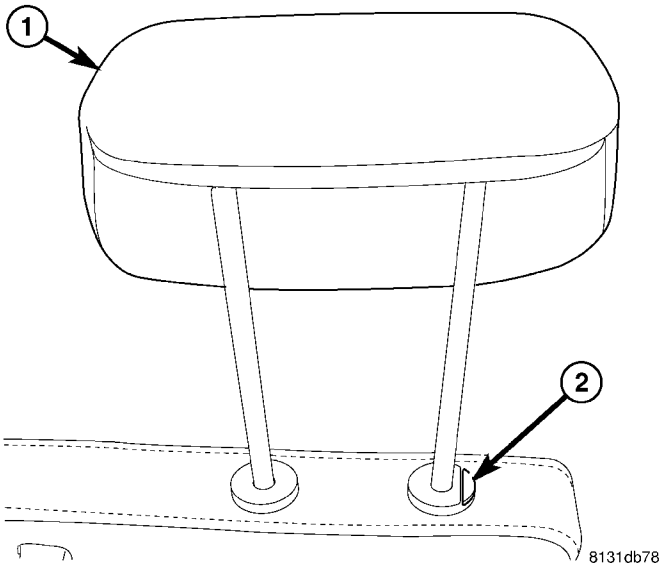

Fig. 46 HEADREST

1 - HEADREST
2 - DEPRESS TAB

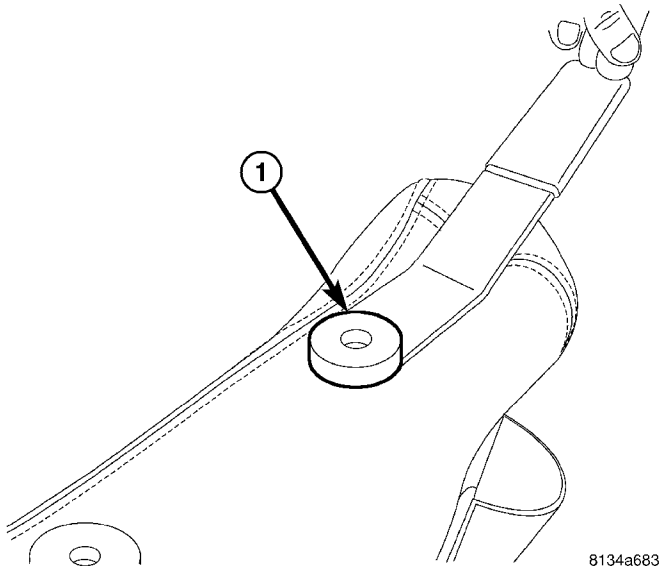

Fig. 47 HEADREST SLEEVE

1 - REMOVE SLEEVE

INSTALLATION

(1) Place headrest sleeve into position and push downward until sleeve locks into position.

(2) Install headrest (Fig. 46).

SEAT - SECOND ROW - FOLD-IN-FLOOR

REMOVAL

(1) Fold second row seats into floor well (Fig. 48).

(2) Place special tool # 9313 R1 on seat shaft (Fig. 49) and (Fig. 50).

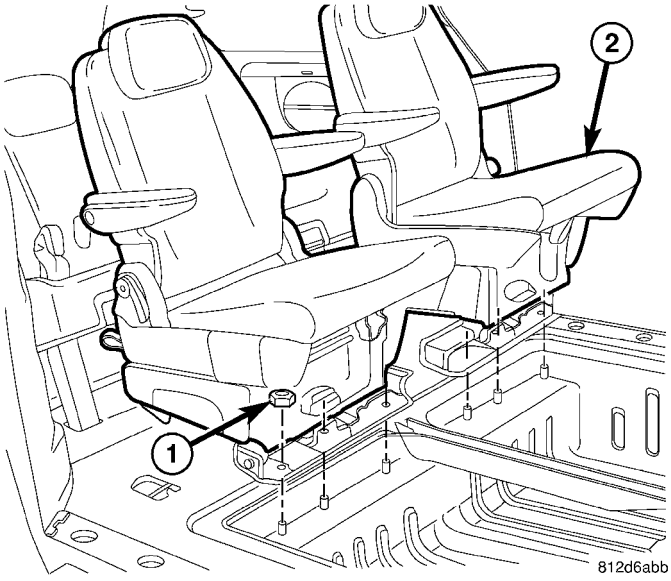

Fig. 48 SECOND ROW SEATS - FOLD-IN-FLOOR

1 - ATTACHING NUTS
2 - SEATS IN THE UPRIGHT POSITION

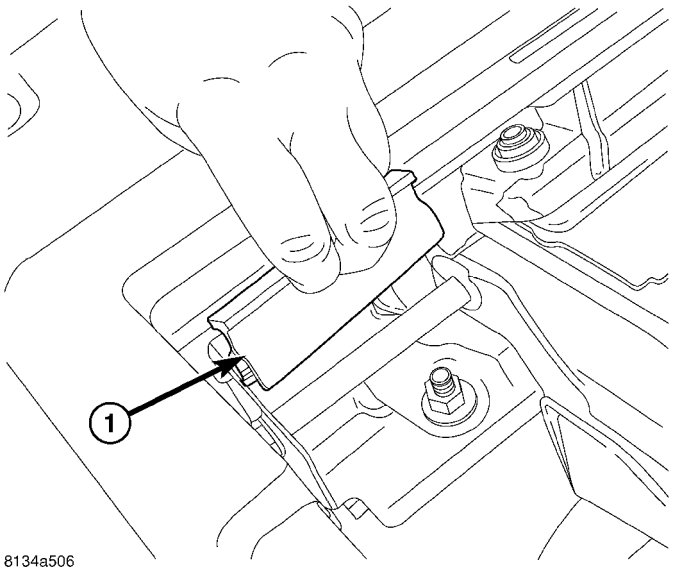

Fig. 49 PLACING TOOL IN TO POSITION

1 - SPECIAL TOOL # 9313 R1

(3) Raise seat to the unsprung position and remove the three attaching nuts (Fig. 51).

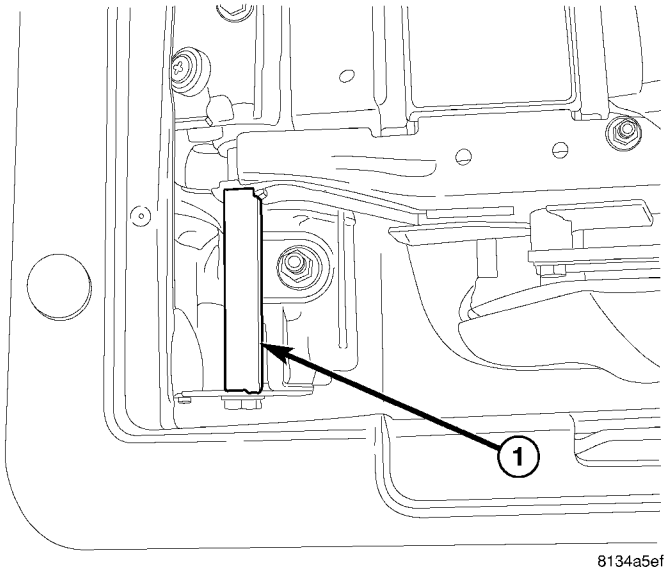

Fig. 50 TOOL IN POSITION

(4) Pick seat up out of floor well and remove from vehicle.

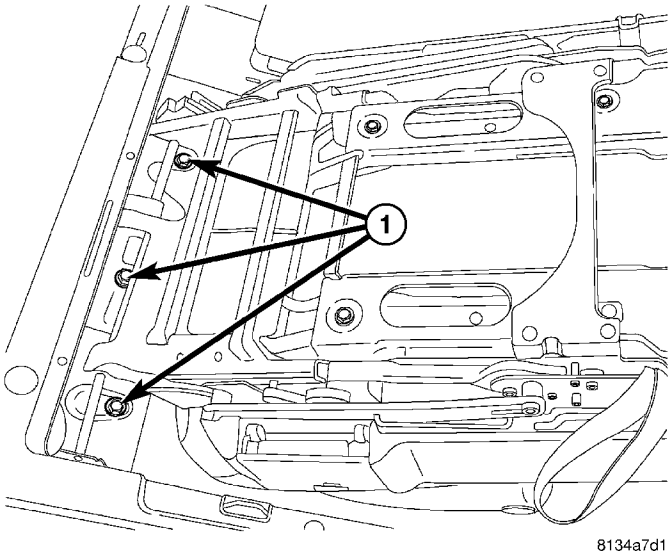

Fig. 51 SEAT IN UNSPRUNG POSITION

1 - ATTACHING NUTS

INSTALLATION

(1) Place second row seat into position in floor well.

(2) Install the three attaching nuts. Tighten nuts to 54 N·m (40 ft. lbs.) torque.

(3) Remove Special Tool # 9313 R1 from seat shaft (Fig. 50) and (Fig. 49).

(4) Raise seat to upright position (Fig. 48).

SEAT BACK COVER/FOAM - SECOND ROW - FOLD-IN-FLOOR

REMOVAL

(1) Remove both armrest. (Refer to 23 - BODY/SEATS/ARMREST - REMOVAL).

(2) Remove headrest and headrest sleeves. (Refer to 23 - BODY/SEATS/HEADREST SLEEVE - REMOVAL).

(3) Remove seat back panel. (Refer to 23 - BODY/SEATS/SEAT BACK PANEL - REMOVAL).

(4) Disengage seat back cover J-straps (Fig. 52).

(5) Remove two push pin fasteners attaching seat back cover at the bottom of seat back.

(6) Remove seat back cover and foam from seat back frame (Fig. 53).

(7) Separate seat back cover from the foam (Fig. 54).

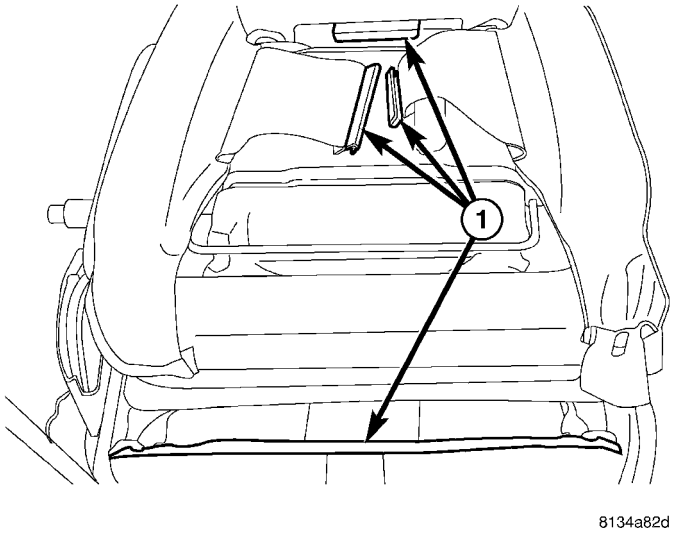

Fig. 52 SECOND ROW SEAT BACK

1 - J-STRAPS

INSTALLATION

(1) Place the seat back cover and foam together (Fig. 54) and (Fig. 53).

(2) Place seat back cover/foam on the seat back frame.

(3) Install two push pin fasteners attaching seat back cover at the bottom of seat back.

(4) Engage seat back cover J-straps (Fig. 52).

(5) Remove seat back panel. (Refer to 23 - BODY/SEATS/SEAT BACK PANEL - INSTALLATION)

(6)

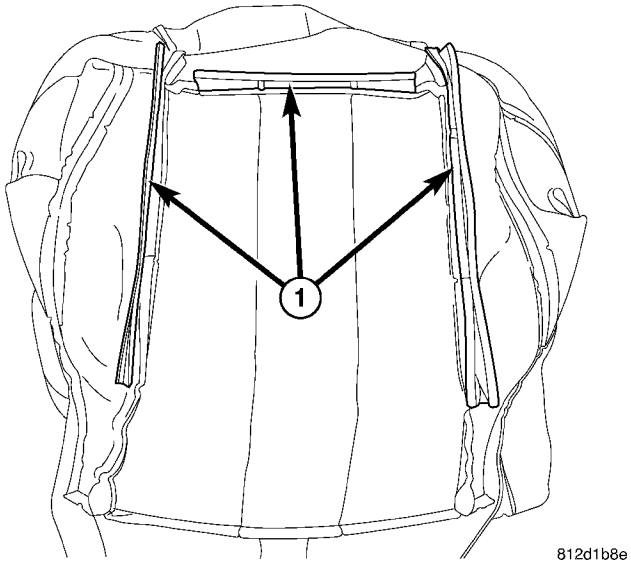

Fig. 53 SEAT BACK COVER 1

1 - LOCKING STRIPS

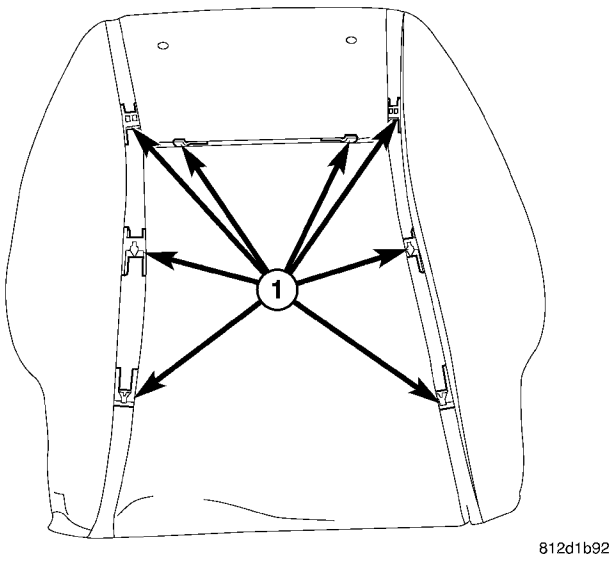

Fig. 54 SEAT BACK FOAM

1 - LOCKING CLIPS

(7) Install headrest sleeves and headrest. (Refer to 23 - BODY/SEATS/HEADREST SLEEVE - INSTALLATION).

(8) Install both armrest. (Refer to 23 - BODY/SEATS/ARMREST - INSTALLATION).

SEAT BACK FRAME - SECOND ROW - FOLD-IN-FLOOR

REMOVAL

(1) Remove seat back cover and foam. (Refer to 23 - BODY/SEATS/SEAT BACK COVER/FOAM - REMOVAL).

(2) Remove two seat back frame bolts on each side and remove frame (Fig. 55).

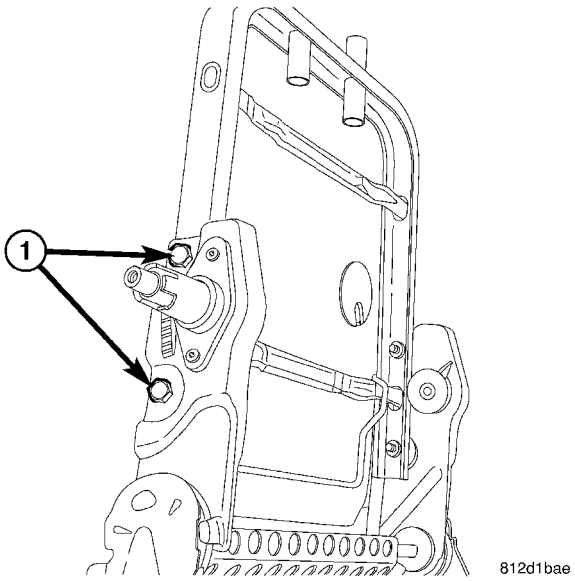

Fig. 55 SEAT BACK FRAME

1 - ATTACHING BOLTS

INSTALLATION

(1) Place seat back frame into position on seat cushion pan (Fig. 56).

(2) Install the two inner and outer bolts attaching seat back frame (Fig. 57).

(3) Install seat cushion upper side shield. (Refer to 23 - BODY/SEATS/SEAT CUSHION UPPER SIDE SHIELDS - INSTALLATION).

(4) Install seat back cover and foam. (Refer to 23 - BODY/SEATS/SEAT BACK COVER/FOAM - INSTALLATION).

SEAT BACK PANEL - SECOND ROW -FOLD-IN-FLOOR

REMOVAL

(1) Using a trim stick or thin flat bladed tool, pry seat back panel to release push pin fasteners from the seat back (Fig. 58).

(2) Remove seat back panel from seat.

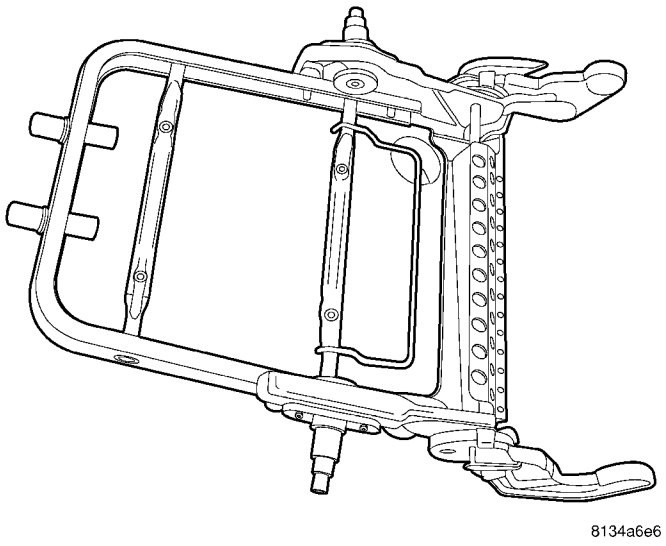

Fig. 56 SECOND ROW SEAT BACK FRAME

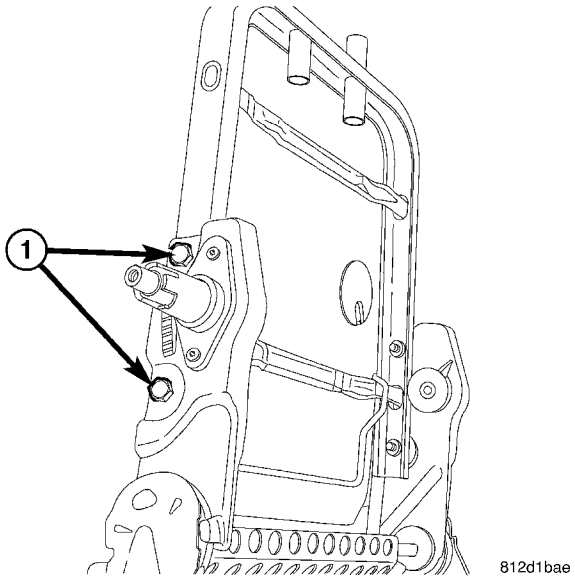

Fig. 57 SEAT BACK FRAME

1 - ATTACHING BOLTS

INSTALLATION

(1) Place seat back panel into position (Fig. 58).

(2) Press on seat back panel to seat the push pin fastens.

SEAT BASE RISER - SECOND ROW - FOLD-IN-FLOOR

REMOVAL

(1) Remove seat from vehicle. (Refer to 23 - BODY/SEATS/SEAT - REMOVAL).

SEAT BASE RISER - SECOND ROW - FOLD-IN-FLOOR (Continued)

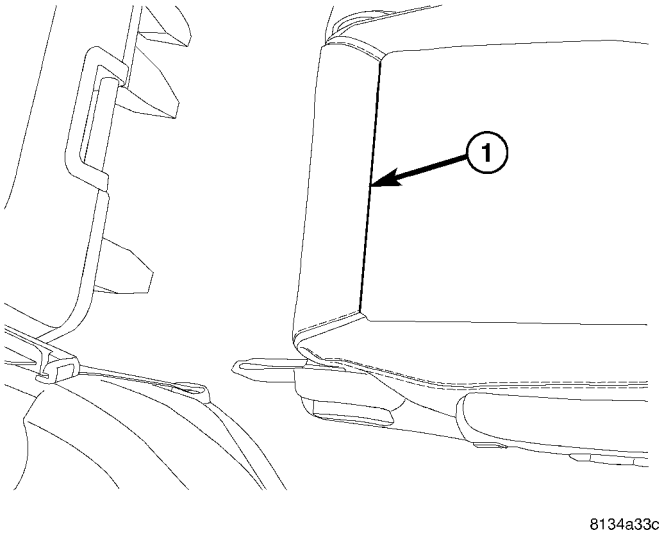

Fig. 58 SECOND ROW SEAT BACK COVER

1 - PRY UP TO RELEASE PUSH PIN FASTENERS

(2) Remove seat back frame. (Refer to 23 - BODY/SEATS/SEAT BACK FRAME - REMOVAL).

(3) Remove seat cushion cover and foam. (Refer to 23 - BODY/SEATS/SEAT CUSHION/FOAM - REMOVAL).

(4) Remove the cushion support (snap on elastic pad) (Fig. 59).

(5) Remove six cushion frame nuts and separate from raiser (Fig. 60), (Fig. 61) and (Fig. 62).

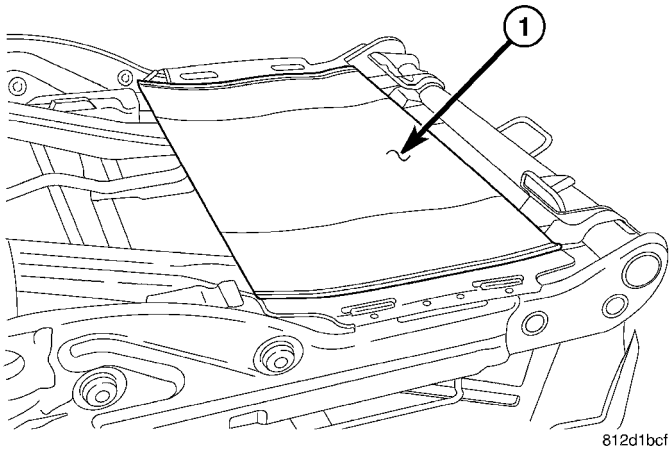

Fig. 59 SEAT CUSHION FRAME ASSEMBLY

1 - CUSHION SUPPORT

(6) Remove seat track from raiser (Fig. 63).

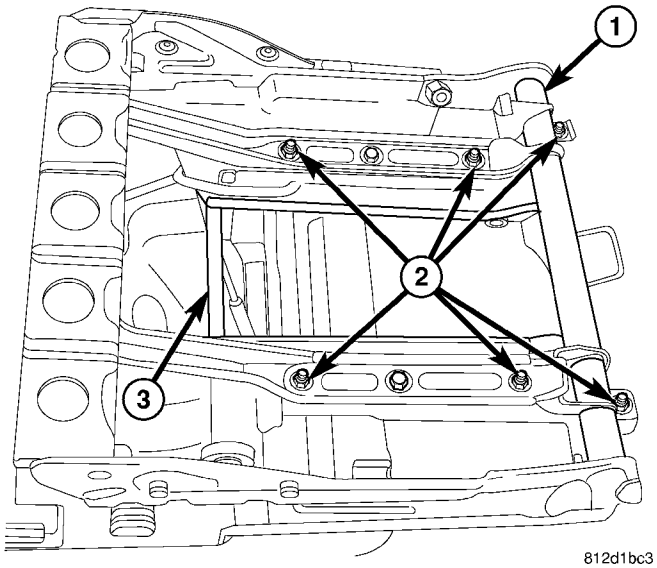

Fig. 60 SEAT CUSHION FRAME AND TRACK ASSEMBLY

1 - SEAT CUSHION FRAME
2 ATTACHING NUTS
3 - SEAT RAISER

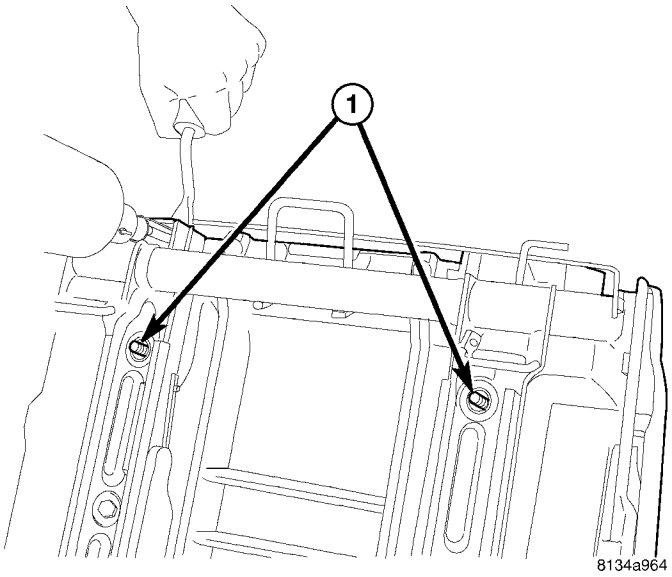

Fig. 61 REMOVE SEAT RISER FROM TRACK

SEAT TRACK STUDS

INSTALLATION

(1) Install seat tracks to seat raiser (Fig. 63).

(2) Place cushion frame into position on seat tracks (Fig. 62).

(3) Install six cushion frame nuts (Fig. 60).

(4) Install the cushion support (snap on elastic pad) (Fig. 59).

(5) Install seat back frame. (Refer to 23 - BODY/SEATS/SEAT BACK FRAME - INSTALLATION).

SEAT BASE RISER - SECOND ROW - FOLD-IN-FLOOR (Continued)

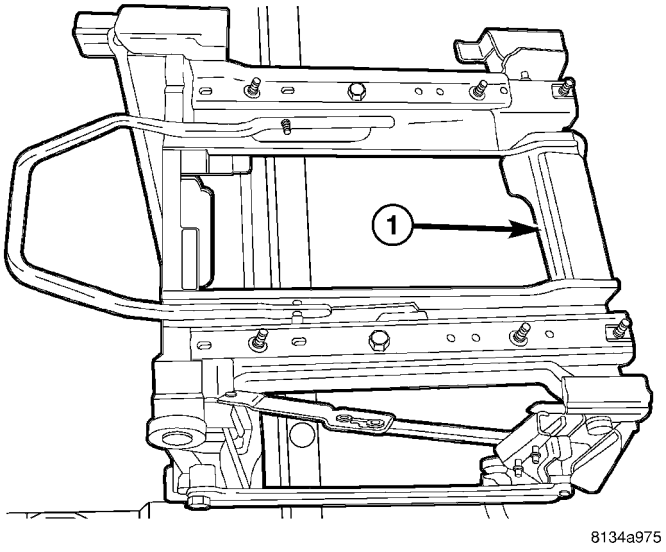

Fig. 62 SECOND ROW SEAT RISER

1 - SEAT RISER ASSEMBLY

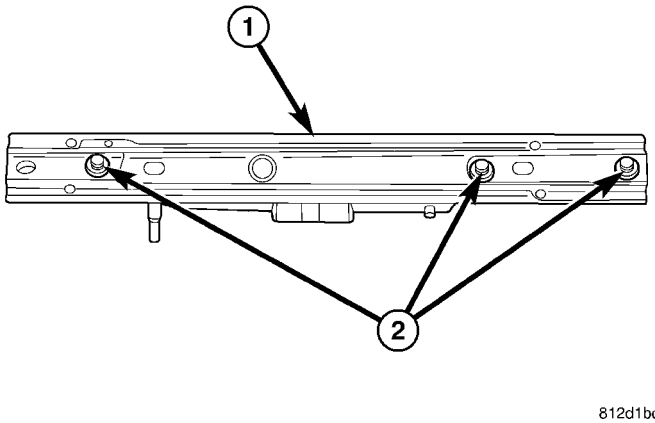

Fig. 63 SEAT TRACK

1 - SEAT TRACK
2 - ATTACHING STUDS

(6) Install seat cushion cover and foam. (Refer to 23 - BODY/SEATS/SEAT CUSHION/FOAM - INSTALLATION).

SEAT CUSHION COVER/FOAM -SECOND ROW - FOLD-IN-FLOOR

REMOVAL

(1) Remove seat cushion upper cushion side shields. (Refer to 23 - BODY/SEATS/SEAT UPPER CUSHION SIDE SHIELDS - REMOVAL)

(2) Disengage J-straps attaching seat cushion cover to cushion pan (Fig. 64).

(3) Remove seat cushion cover and foam from cushion pan (Fig. 65).

(4) Separate the seat cushion cover from the foam.

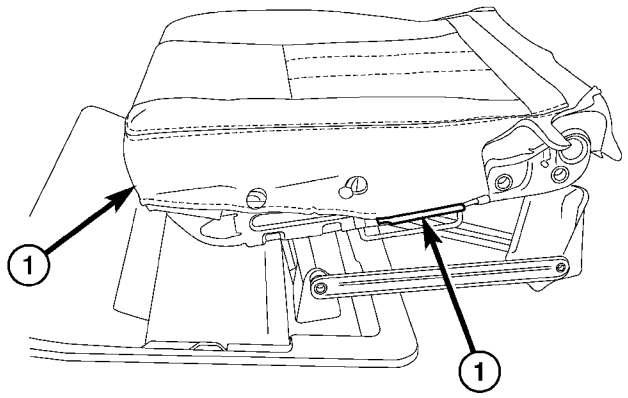

Fig. 64 SECOND ROW CUSHION ATTACHING POINTS

1 - J-STRAPS

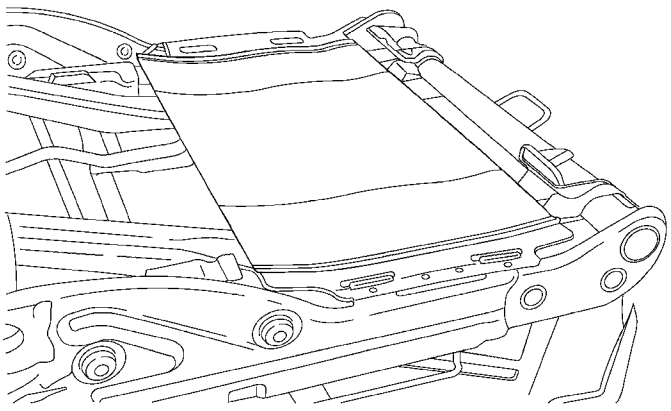

Fig. 65 SECOND ROW SEAT CUSHION ASSEMBLY

INSTALLATION

(1) Place the seat cushion cover and foam together and place on seat cushion pan (Fig. 65).

(2) Engage J-straps attaching seat cushion cover to cushion pan (Fig. 64).

(3) Install seat cushion upper cushion side shields. (Refer to 23 - BODY/SEATS/SEAT UPPER CUSHION SIDE SHIELDS - INSTALLATION).

SEAT RECLINER/FORWARD FOLDING MECHANISM -SECOND ROW -FOLD-IN-FLOOR

REMOVAL

(1) Remove seat back cover and foam (Fig. 66). (Refer to 23 - BODY/SEATS/SEAT BACK COVER/ FOAM - REMOVAL)

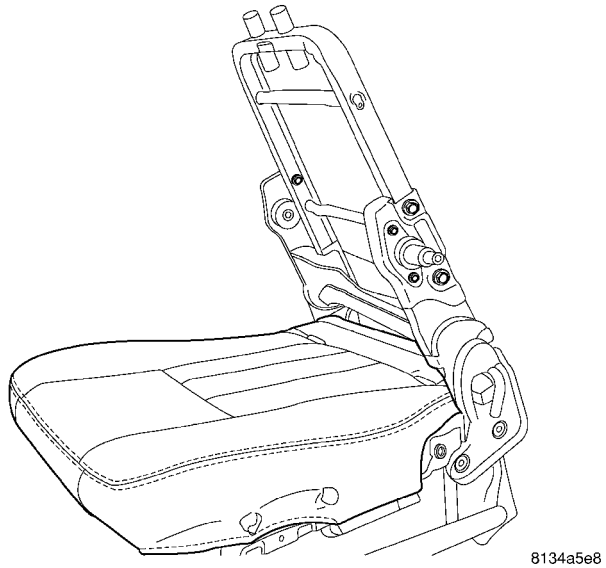

Fig. 66 SECOND ROW SEAT BACK

(2) Remove two seat back frame bolts on each side and remove frame (Fig. 67).

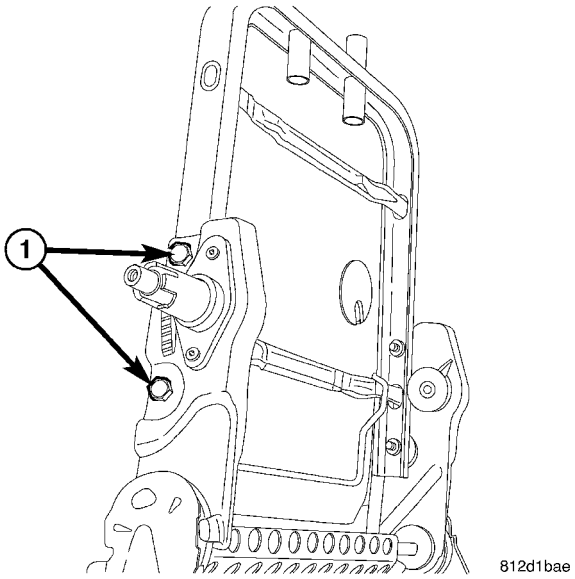

Fig. 67 SEAT BACK FRAME

1 - ATTACHING BOLTS

(3) Remove the two reclining mechanism bolts from each side of the frame (Fig. 68) and (Fig. 69).

(4) Remove both armrest rotating assembly. (Refer to 23 - BODY/SEATS/ARMREST ROTATING ASSEMBLY - REMOVAL).

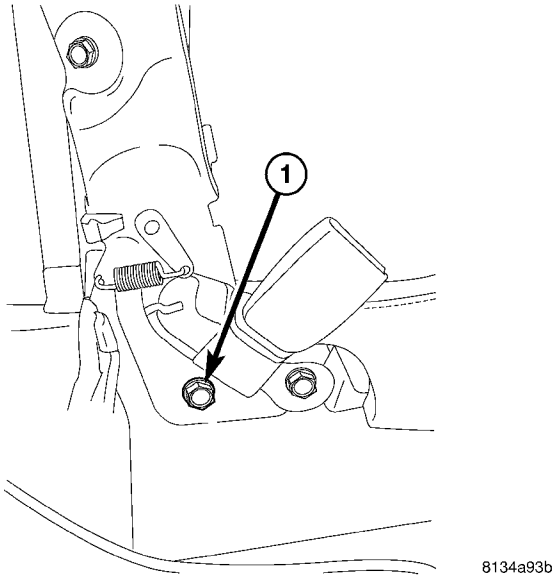

Fig. 68 SECOND ROW INBOARD SIDE

1 - ATTACHING BOLT

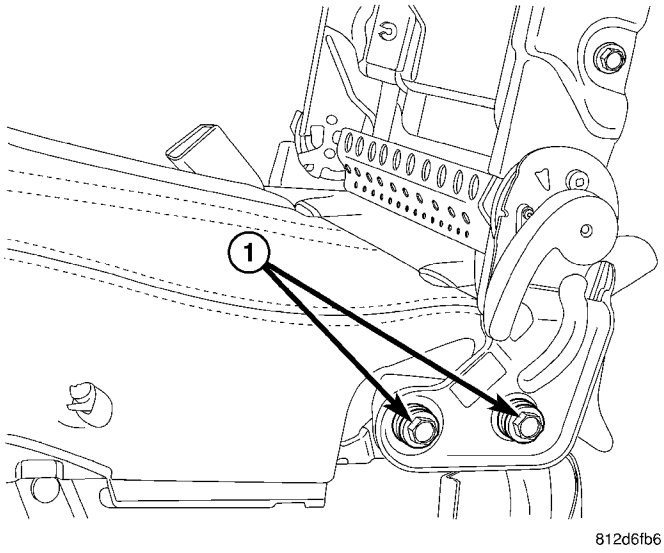

Fig. 69 SEAT BACK OUTBOARD SIDE

ATTACHING BOLTS

INSTALLATION

(1) Install both armrest rotating assembly. (Refer to 23 - BODY/SEATS/ARMREST ROTATING ASSEMBLY - INSTALLATION).

(2) Install the two reclining mechanism bolts on each side of frame (Fig. 68) and (Fig. 69).

(3) Install seat back frame (Fig. 67).

(4) Install seat back cover and foam (Fig. 66).

SEAT CUSHION SIDE SHIELD - SECOND ROW - FOLD-IN-FLOOR

REMOVAL

(1) On outboard side remove forward folding handle.
(2) Remove cup holder attaching screws (Fig. 70).
(3) Remove move rear attaching screw.
(4) Remove upper side shield.

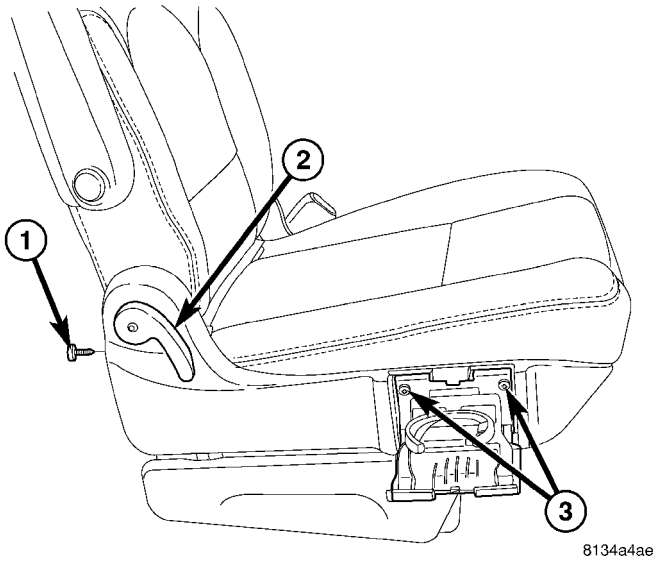

Fig. 70 SECOND ROW SEAT UPPER SIDE SHIELD

1 - REAR ATTACHING SCREW
2 - FORWARD FOLDING HANDLE
3 - CUP HOLDER ATTACHING SCREWS

INSTALLATION

(1) Place seat cushion upper side shield into position.
(2) Place cup holder into position and install cup holder attaching screws (Fig. 70).
(3) Install rear attaching screw.
(4) Outboard side install forward folding handle.

SEAT GAS STRUT - SECOND ROW - FOLD-IN-FLOOR

REMOVAL

(1) Place second row seat in the upright position.
(2) Remove lower front shield (Fig. 71).

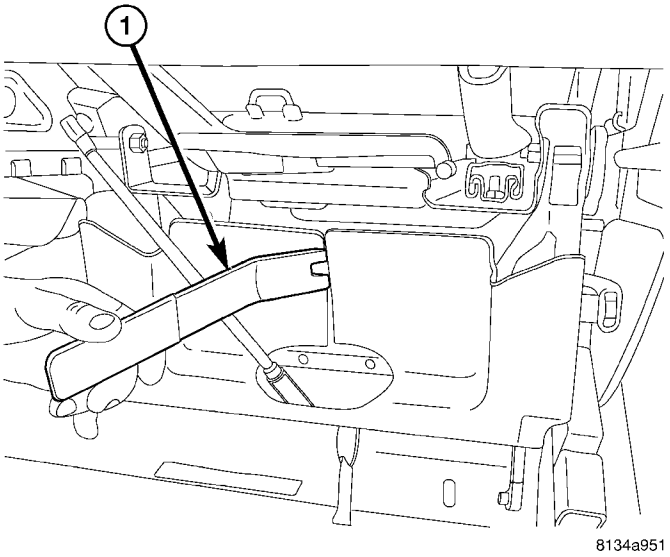

Fig. 71 SECOND ROW LOWER FRONT SHIELD

1 - TRIM TOOL

(3) Remove attaching pin (Fig. 72).

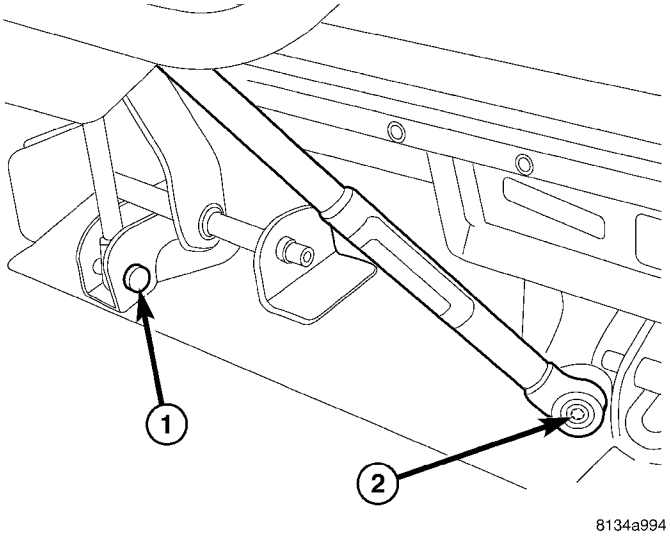

Fig. 72 PROP RODS

1 - ATTACHING PIN
2 - ATTACHING SCREW

(4) Remove upper attaching screw (Fig. 73).
(5) Remove gas strut.

SEAT GAS STRUT - SECOND ROW - FOLD-IN-FLOOR (Continued)

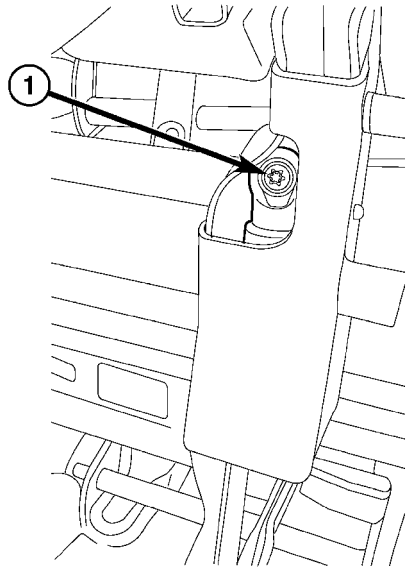

Fig. 73 GAS STRUT TOP SCREW

1 - ATTACHING SCREW

INSTALLATION

(1) Place gas strut into position.
(2) Install upper attaching screw (Fig. 73).
(3) Install attaching pin (Fig. 72).
(4) Install lower front shield (Fig. 74).

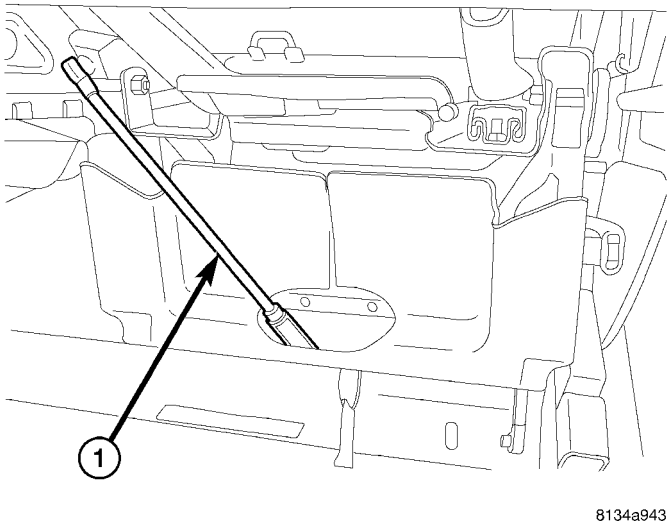

Fig. 74 SECOND ROW SEAT PROP ROD

1 - PROP ROD

SEAT PROP ROD - SECOND ROW - FOLD-IN-FLOOR

REMOVAL

(1) Place second row seat in the upright position.
(2) Remove lower front shield (Fig. 75) and (Fig. 76).

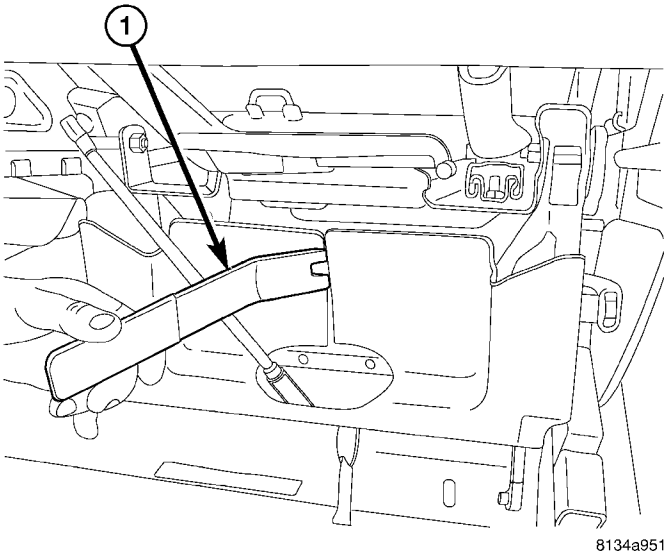

Fig. 75 SECOND ROW LOWER FRONT SHIELD

1 - TRIM TOOL

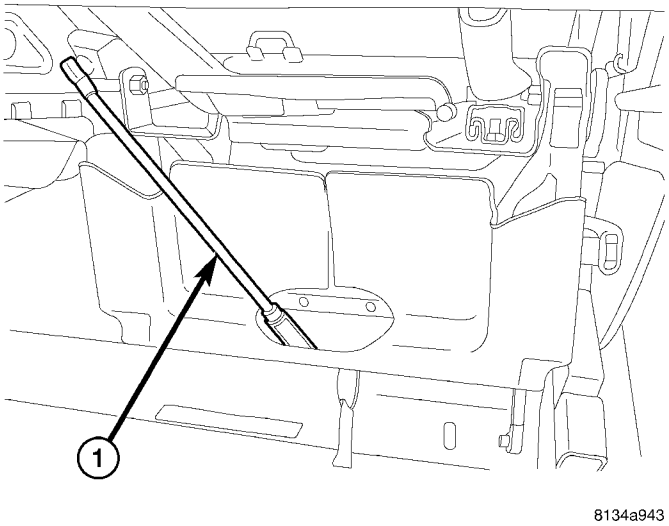

Fig. 76 SECOND ROW SEAT PROP ROD

1 - PROP ROD

(3) Remove prop rod top screw (Fig. 77).
(4) Remove lower attaching screw (Fig. 78).
(5) Remove prop rod.

SEAT PROP ROD - SECOND ROW - FOLD-IN-FLOOR (Continued)

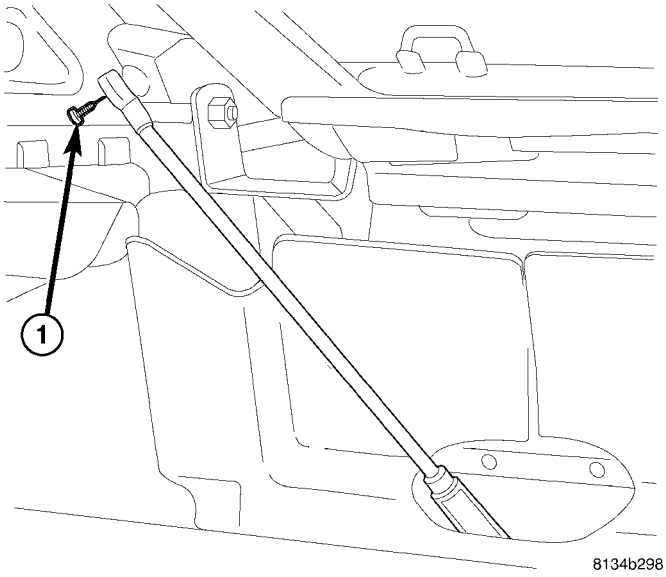

Fig. 77 PROP ROD TOP SCREW

1 - ATTACHING SCREW

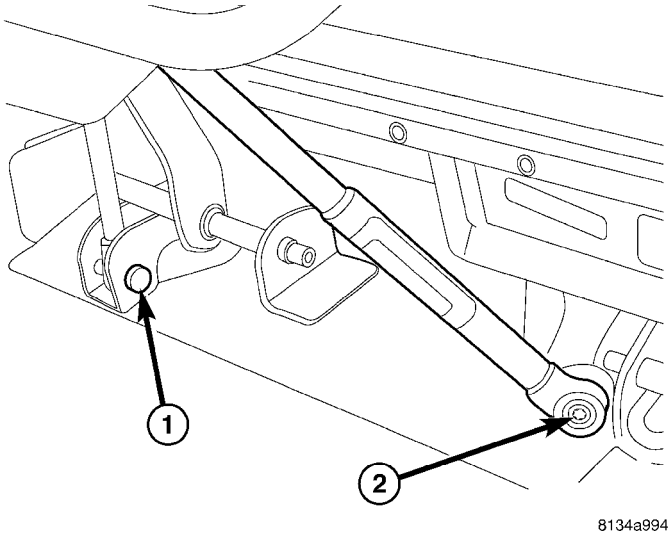

Fig. 78 PROP RODS

1 - ATTACHING PIN
2 - ATTACHING SCREW

INSTALLATION

(1) Place prop rod into position.
(2) Install lower attaching screw (Fig. 78).
(3) Install prop rod top screw (Fig. 77).
(4) Install lower front shield (Fig. 76).

BUCKET SEAT BACK - QUAD BUCKET

REMOVAL

NOTE: Quad seats equipped with child restraint seats have an interlock feature that will not allow the seat back to fold forward with the child seat open.

(1) Remove the headrests. (Refer to 23 - BODY/SEATS/HEADREST - REMOVAL)
(2) Remove the armrests, if equipped. (Refer to 23 - BODY/SEATS/ARMREST - REMOVAL)
(3) Remove the seat back hinge covers. (Refer to 23 - BODY/SEATS/SEAT BACK HINGE COVERS - QUAD BUCKET, 50/50 SPLIT, BENCH - REMOVAL)
(4) Disconnect the child seat synchronizer cable, if equipped. (Fig. 79)
(5) Remove the seat back frame bolts and remove the seat back. (Fig. 80)

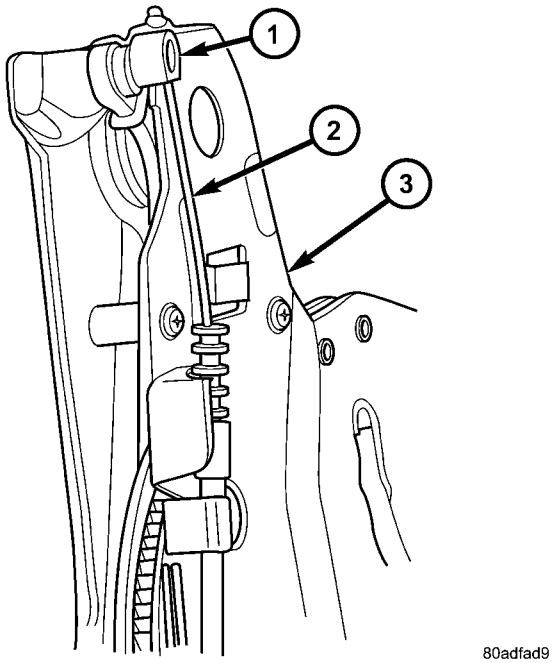

Fig. 79 QUAD SEAT SYNCHRONIZER CABLE

1 - CABLE END CONNECTOR
2 - SYNCHRONIZER CABLE
3 - SEATBACK HINGE

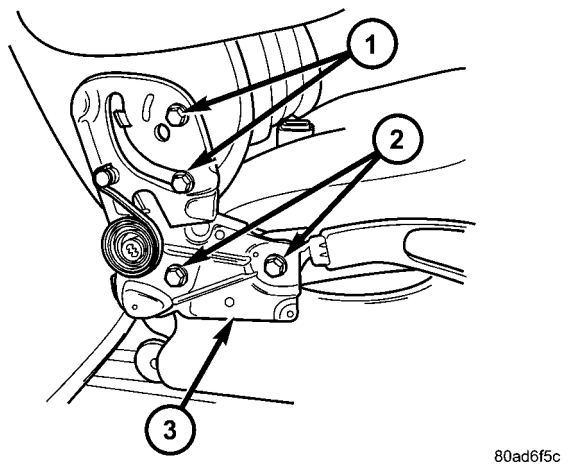

Fig. 80 SEAT BACK HINGE - TYPICAL

1 - SEATBACK FRAME SHOULDER BOLTS
2 - SEAT CUSHION FRAME BOLTS
3 - SEATBACK HINGE

INSTALLATION

(1) Install the seat back.

(2) Install the shoulder bolts attaching the seat back hinge to the seat back frame and tighten to 48 N·m (35 ft. lbs.) torque.

(3) Connect the child seat synchronizer cable, if equipped.

(4) Install the seat back hinge covers. (Refer to 23 - BODY/SEATS/SEAT BACK HINGE COVERS - QUAD BUCKET, 50/50 SPLIT, BENCH - INSTALLATION)

(5) Install the armrests. (Refer to 23 - BODY/SEATS/ARMREST - INSTALLATION)

(6) Install the headrest. (Refer to 23 - BODY/SEATS/HEADREST - INSTALLATION)

(7) Verify seat back operation.

QUAD SEAT CUSHION

REMOVAL

(1) Remove the quad bucket seat side shields and cup holder. (Refer to 23 - BODY/SEATS/SEAT SIDE SHIELD/QUAD BUCKET SEAT SIDE SHIELD/CUP HOLDER - REMOVAL) and (Refer to 23 - BODY/SEATS/QUAD BUCKET SEAT SIDE SHIELD - NO CUP HOLDER - REMOVAL)

(2) Remove seat track front and rear covers if equipped. (Refer to 23 - BODY/SEATS/SEAT TRACK REAR COVER - REMOVAL) and (Refer to 23 - BODY/SEATS/SEAT TRACK FRONT COVER - REMOVAL)

(3) If equipped, open storage bin to access front pan bolts.

(4) Remove bolts attaching seat cushion pan to seat riser.

(5) Disconnect wire connectors, if equipment.

(6) Remove seat cushion from seat.

(7) Disengage J-strap retainers holding seat cover to cushion.

(8) Remove seat cushion pan from cover and pad.

INSTALLATION

(1) Place seat cushion cover in position on seat cushion.

(2) Engage J-strap retainers to hold seat cover to cushion.

(3) Place seat cushion in position on seat.

(4) Connect wire connectors, if equipment.

(5) Install bolts attaching seat cushion to seat riser. Tighten bolts to 40 N·m (29.5 ft. lbs.) torque.

(6) If equipped, close storage bin.

(7) Install seat track front and rear covers, if equipped. (Refer to 23 - BODY/SEATS/SEAT TRACK REAR COVER - INSTALLATION) and (Refer to 23 - BODY/SEATS/SEAT TRACK FRONT COVER - INSTALLATION)

(8) Install the quad seat side shield and cup holder if equipped. (Refer to 23 - BODY/SEATS/QUAD BUCKET SEAT SIDE SHIELD/CUP HOLDER - INSTALLATION) and (Refer to 23 - BODY/SEATS/QUAD BUCKET SEAT SIDE SHIELD - NO CUP HOLDER - INSTALLATION)

(9) Install seat cushion side covers. (Refer to 23 - BODY/SEATS/FRONT SEAT CUSHION SIDE COVER - INSTALLATION)

QUAD BUCKET SEAT SIDE SHIELD/CUP HOLDER

REMOVAL

(1) Remove the seat from the vehicle. Refer to Owner's Manual for proper procedures.

(2) Remove the two screws and remove the hinge cover (Fig. 81)

(3) Remove the dump latch handle.

(4) Remove the three screws (Fig. 82).

(5) Depress the tab on the cup holder assembly (Fig. 83).

(6) Using a deep well socket or equivalent, depress the push pin tabs and remove the cup holder assembly (Fig. 84).

QUAD BUCKET SEAT SIDE SHIELD/CUP HOLDER (Continued)

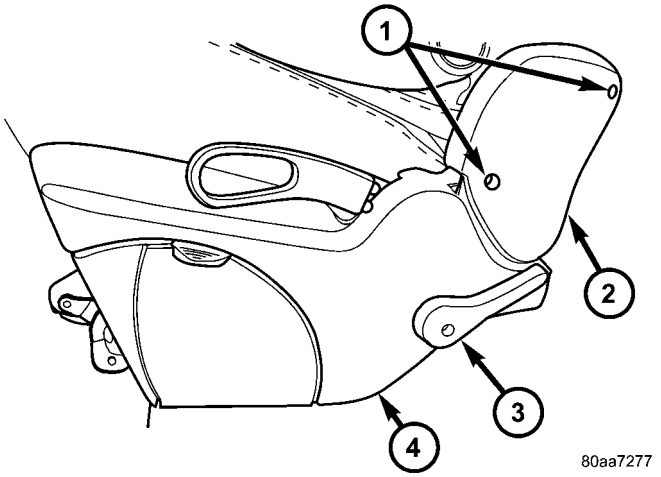

Fig. 81 SEAT SIDE SHIELD/CUP HOLDER

1 - HINGE COVER SCREWS
2 - HINGE COVER
3 - DUMP LATCH HANDLE
4 - SIDE SHIELD/CUP HOLDER

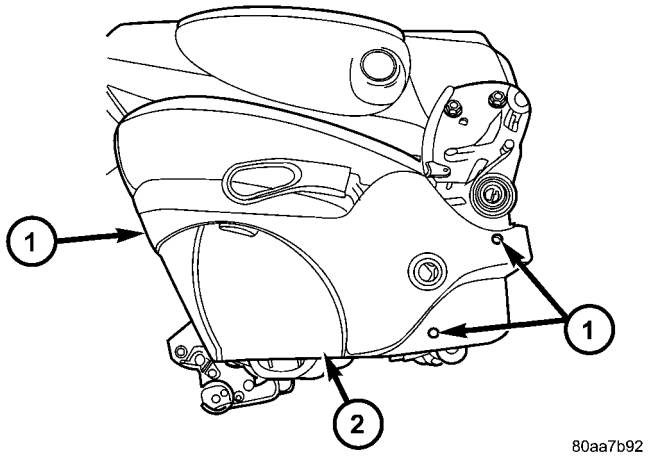

Fig. 82 SEAT SIDE SHIELD/CUP HOLDER SCREWS

1 - SIDE SHIELD/CUP HOLDER SCREWS
2 - SIDE SHIELD/CUP HOLDER

INSTALLATION

(1) Install cup holder onto the pin and lock tab.
(2) Install the three screws.
(3) Install the dump latch handle.
(4) Install the hinge cover and screws.
(5) Install the seat. Refer to Owner's Manual for proper procedures.

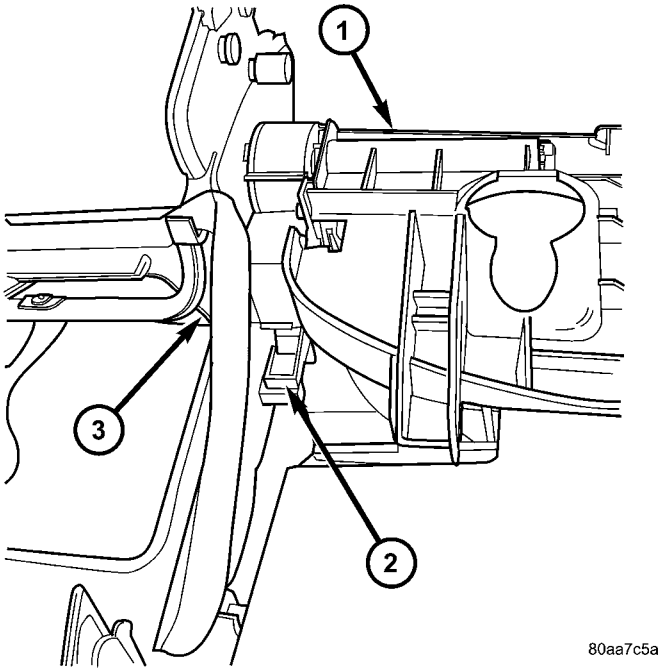

Fig. 83 SIDE SHIELD/CUP HOLDER ATTACHMENT CLIPS

1 - SIDE SHIELD/CUP HOLDER
2 - LOCK TAB
3 - SEAT RISER

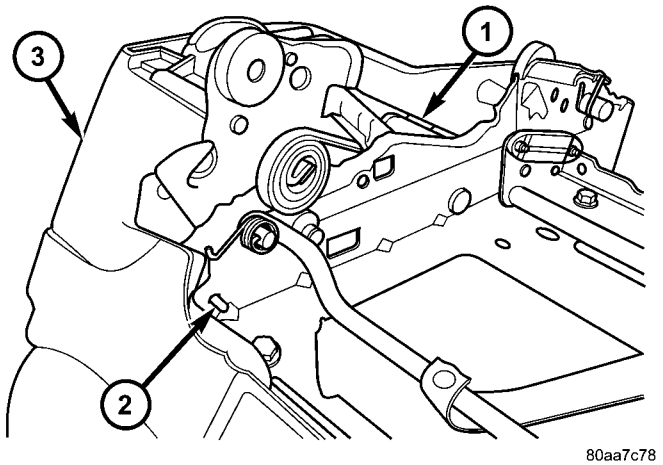

Fig. 84 SIDE SHIELD/CUP HOLDER ATTACHMENT PIN

1 - SEAT RISER
2 - ATTACHMENT PIN
3 - SIDE SHIELD/CUP HOLDER

QUAD BUCKET SEAT SIDE SHIELD - NO CUP HOLDER

REMOVAL

(1) Remove the three screws (Fig. 85).
(2) Remove the side shield.

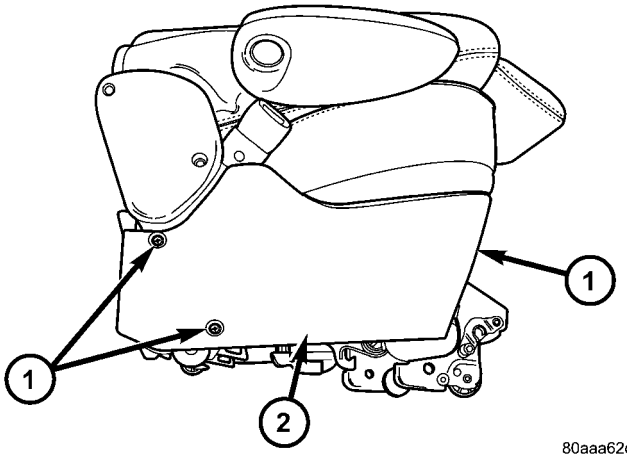

Fig. 85 SEAT SIDE COVER - QUAD BUCKETS

1 - SIDE SHIELD SCREWS
2 - SIDE SHIELD

INSTALLATION

(1) Install the side shield hook into the rectangular hole on the riser.
(2) Install the three screws.

QUAD BUCKET SEAT RISER

REMOVAL

(1) Remove the seat from vehicle. Refer to Owner's Manual for proper procedures.
(2) Remove seat side shield/cup holder. (Refer to 23 - BODY/SEATS/QUAD BUCKET SEAT SIDE SHIELD/CUP HOLDER - REMOVAL)
(3) Remove the seat side shield. (Refer to 23 - BODY/SEATS/QUAD BUCKET SEAT SIDE SHIELD - NO CUP HOLDER - REMOVAL)
(4) Remove the five bolts, two nuts, strut bushing and remove the riser from the seat (Fig. 86).

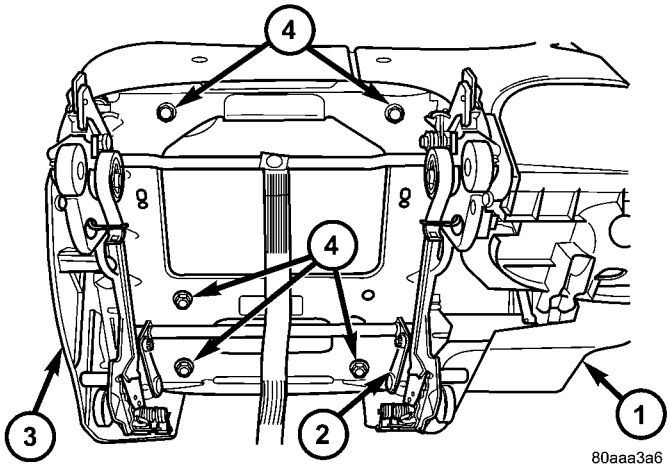

Fig. 86 BUCKET SEAT RISER - QUAD BUCKET

1 - SEAT SIDE SHIELD/CUP HOLDER
2 - SEAT RISER
3 - SEAT SIDE SHIELD
4 - RISER BOLTS

INSTALLATION

(1) Install the riser, the strut bushing into the hole, the five bolts, two nuts and tighten all fasteners to 40 N·m (30 ft. lbs.).
(2) Install the seat side shield. (Refer to 23 - BODY/SEATS/QUAD BUCKET SEAT SIDE SHIELD - NO CUP HOLDER - INSTALLATION)
(3) Install the seat side shield/cup holder. (Refer to 23 - BODY/SEATS/QUAD BUCKET SEAT SIDE SHIELD/CUP HOLDER - INSTALLATION)
(4) Install the seat. Refer to Owner's Manual for proper procedures.

BENCH SEAT BACK PANEL

REMOVAL

(1) On third row seats remove plastic grocery bag retainer. (Refer to 23 - BODY/SEATS/PLASTIC GROCERY BAG RETAINER - REMOVAL)
(2) Using a fork type prying tool (C4829) on three pass seats, disengage push-in fasteners holding seat back cover to seat back frame and remove seat back cover from seat. (Fig. 87).
(3) Using a fork type prying tool (C4829) on two pass seats, disengage push-in fasteners holding the upper corners and lower edge of the seat back panel to seat back frame and remove seat back cover from seat by pulling the lower edge out away from the seat back to disengage the upper two hooks. (Fig. 88).

BENCH SEAT BACK PANEL (Continued)

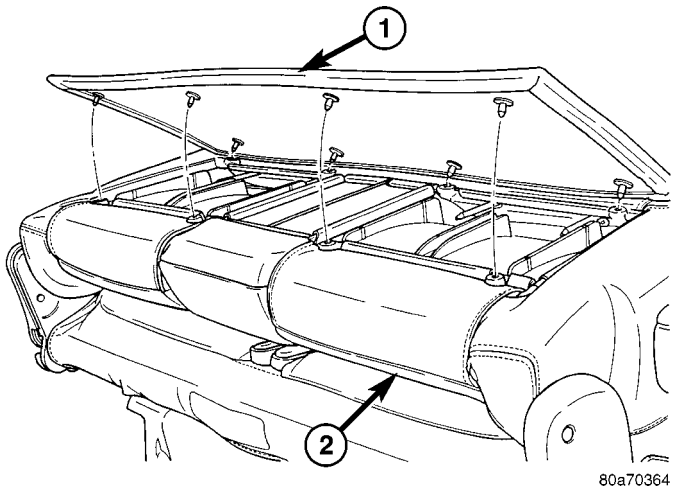

Fig. 87 THREE - PASS BENCH SEAT BACK PANEL

1 - SEAT BACK REAR PANEL
2 - FIRST REAR CHILD RESTRAINT SEAT

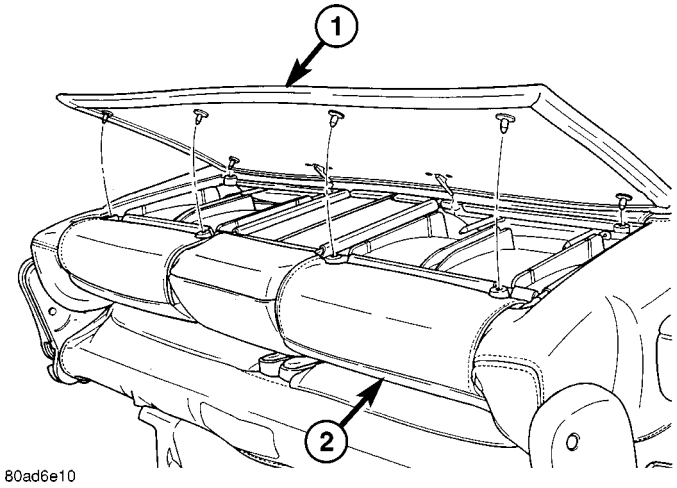

Fig. 88 TWO - PASSENGER BENCH SEAT BACK PANEL

1 - SEAT BACK REAR PANEL
2 - SEAT BACK

INSTALLATION

(1) On three pass seats place seat back panel in position on seat and install the push-in fasteners (Fig. 87).

(2) On two pass seats engage the two upper hooks of the panel, place the panel into position and install the push-in fasteners (Fig. 88).

(3) On third row bench seats install grocery bag holder. (Refer to 23 - BODY/SEATS/PLASTIC GROCERY BAG RETAINER - INSTALLATION)

SEAT CUSHION COVER - QUAD BUCKET, 50/50 SPLIT, BENCH

REMOVAL

BENCH SEAT & 50/50 SPLIT

(1) Remove seat from vehicle. Refer to Owner's Manual for proper procedures.

(2) Remove seat back. (Refer to 23 - BODY/SEATS/BENCH SEAT BACK - REMOVAL)

(3) Remove seat risers. (Refer to 23 - BODY/SEATS/BENCH SEAT RISER - 50/50 SPLIT - REMOVAL) and (Refer to 23 - BODY/SEATS/BENCH SEAT RISER - FIRST ROW - REMOVAL) and (Refer to 23 - BODY/SEATS/BENCH SEAT RISER - SECOND ROW - REMOVAL)

(4) Disconnect the cushion cover J-straps.

(5) Remove seat cushion cover from seat cushion.

QUAD BUCKET

(1) Remove seat from vehicle. Refer to Owner's Manual for proper procedures.

(2) Remove seat back.(Refer to 23 - BODY/SEATS/BUCKET SEAT BACK - QUAD BUCKET - REMOVAL)

(3) Remove seat risers. (Refer to 23 - BODY/SEATS/QUAD BUCKET SEAT RISER - REMOVAL)

(4) Disconnect the cushion cover J-straps.

(5) Remove seat cushion cover from seat cushion.

INSTALLATION

BENCH SEAT & 50/50 SPLIT

(1) Position the seat cushion cover on the cushion.

(2) Engage the J-strap retainers.

(3) Steam wrinkles from seat cushion, if necessary.

(4) Install seat risers. (Refer to 23 - BODY/SEATS/BENCH SEAT RISER - 50/50 SPLIT - INSTALLATION) and (Refer to 23 - BODY/SEATS/BENCH SEAT RISER - SECOND ROW - INSTALLATION) and (Refer to 23 - BODY/SEATS/BENCH SEAT RISER - THIRD ROW - INSTALLATION)

(5) Install seat back. (Refer to 23 - BODY/SEATS/BENCH SEAT BACK - INSTALLATION)

(6) Install seat into vehicle.

QUAD BUCKET

(1) Position the seat cushion cover on the cushion.

(2) Engage the J-strap retainers.

(3) Steam wrinkles from seat cushion, if necessary.

(4) Install seat risers. (Refer to 23 - BODY/SEATS/QUAD BUCKET SEAT RISER - INSTALLATION)

(5) Install seat back. (Refer to 23 - BODY/SEATS/BUCKET SEAT BACK - QUAD BUCKET - INSTALLATION)

(6) Install seat into vehicle.

BENCH SEAT RISER - 50/50 SPLIT

REMOVAL

(1) Remove the seat from the vehicle. Refer to the Owners Manual for proper procedures.
(2) Unclip the seat cushion cover J-strap. (Fig. 89).
(3) Remove the six bolts and remove the riser.

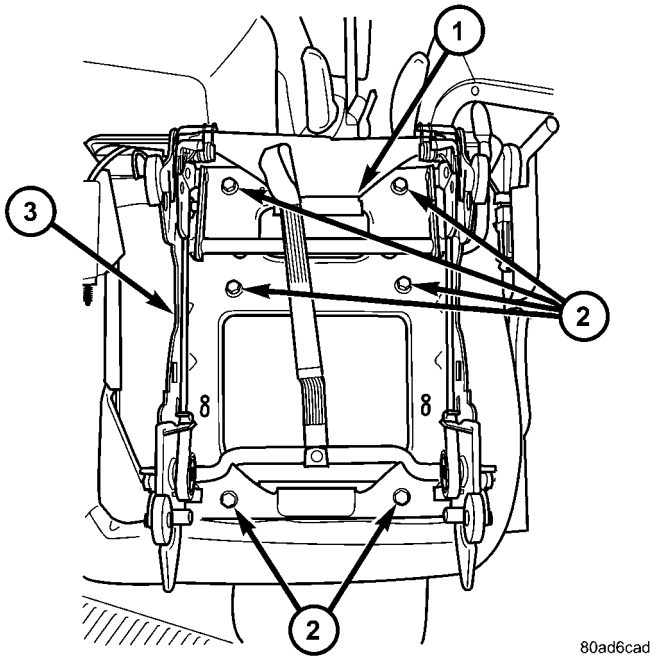

Fig. 89 BENCH SEAT RISER - 50/50 SPLIT

1 - SEAT CUSHION COVER CLIP
2 - SEAT RISER BOLTS
3 - SEAT RISER

INSTALLATION

(1) Place the riser onto the seat install the bolts and tighten to 48 N·m (35 ft. lbs.) torque.
(2) Clip seat cushion cover J-strap onto the riser.
(3) Install the seat into the vehicle. Refer to the Owner's Manual for proper procedure.

BENCH SEAT RISER - SECOND ROW

REMOVAL

(1) Remove seat from vehicle. Refer to Owner's Manual for proper procedures.
(2) Place seat bottom side up on a clean covered work surface.
(3) Remove bolts attaching seat riser to seat cushion frame (Fig. 90).
(4) Remove riser from seat.

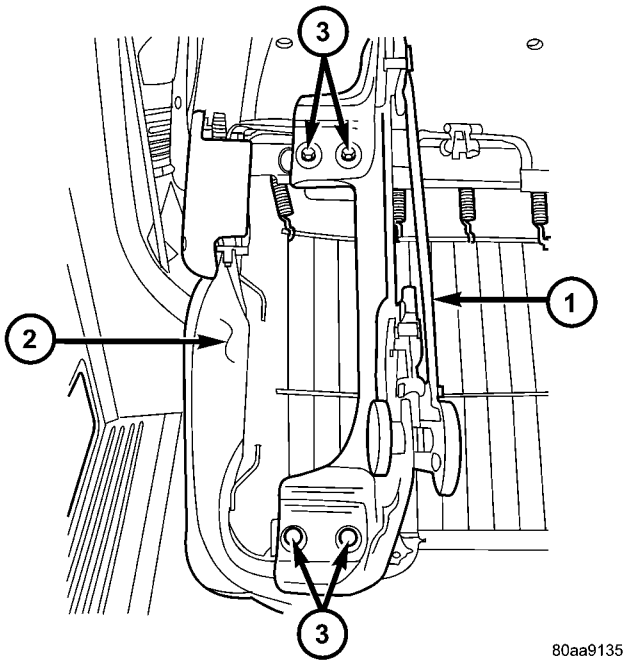

Fig. 90 BENCH SEAT RISER - SECOND ROW

1 - RISER
2 - FIRST ROW BENCH SEAT
3 - RISER BOLTS

INSTALLATION

(1) Place riser in position on seat.
(2) Install bolts attaching seat riser to seat cushion frame (Fig. 90). Tighten bolts to 48 N·m (35 ft. lbs.) torque.
(3) Install seat into vehicle.

BENCH SEAT RISER - THIRD ROW

REMOVAL

(1) Remove seat track. (Refer to 23 - BODY/ SEATS/BENCH SEAT TRACK - REMOVAL)
(2) Remove bolts attaching riser to seat cushion frame and remove the riser. (Fig. 95).

INSTALLATION

(1) Place riser in position on seat.
(2) Install bolts attaching riser to seat cushion frame (Fig. 95). Tighten bolts to 48 N·m (35 ft. lbs.) torque.
(3) Install seat track. (Refer to 23 - BODY/SEATS/ BENCH SEAT TRACK - INSTALLATION)

SEAT BACK HINGE COVERS - QUAD BUCKET, 50/50 SPLIT, BENCH

REMOVAL

(1) Remove seat from vehicle. Refer to Owner's Manual for proper procedures.

(2) Remove screws attaching upper hinge cover to seat back hinge (Fig. 91).

(3) Remove upper cover from seat back hinge.

(4) Remove screws attaching lower cover to seat back hinge.

(5) Remove lower cover from hinge.

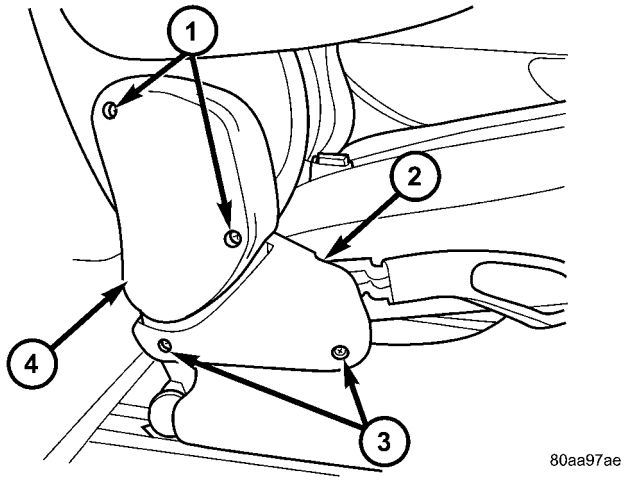

Fig. 91 BENCH SEAT BACK HINGE COVERS - TYPICAL

1 - UPPER COVER SCREWS
2 - LOWER COVER
3 - LOWER COVER SCREWS
4 - UPPER COVER

INSTALLATION

(1) Place lower cover in position on hinge.

(2) Install screws attaching lower cover to seat back hinge (Fig. 91). Tighten screws to 2.3 N·m (20 in. lbs.) torque.

(3) Place upper cover in position on seat back hinge.

(4) Install screws attaching upper hinge cover to seat back hinge. Tighten screws to 2.3 N·m (20 in. lbs.) torque.

(5) Install seat in vehicle.

BENCH SEAT BACK HINGE

REMOVAL

NOTE: Bench seats equipped with child restraint seats have an interlock feature that will not allow the seat back to fold forward with the child seat open.

(1) Remove the bench seat back upper and lower hinge covers. (Refer to 23 - BODY/SEATS/SEAT BACK HINGE COVERS - 50/50 SPLIT, BENCH - REMOVAL)

(2) Remove the seat back. (Refer to 23 - BODY/SEATS/BENCH SEAT BACK - REMOVAL)

(3) Remove bolts attaching seat back hinge to seat cushion frame (Fig. 92).

(4) Remove seat back hinge from seat.

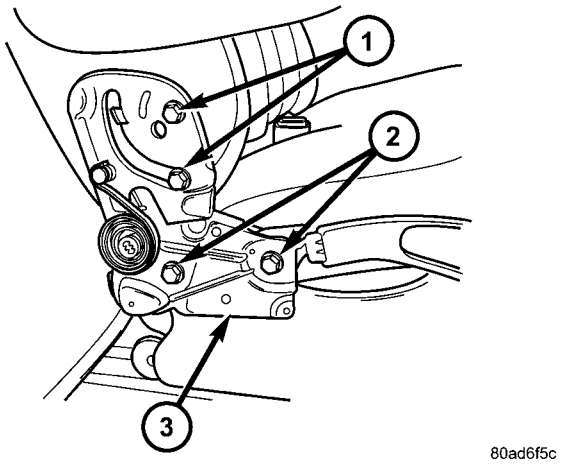

Fig. 92 BENCH SEAT BACK HINGE

1 - SEATBACK FRAME SHOULDER BOLTS
2 - SEAT CUSHION FRAME BOLTS
3 - SEATBACK HINGE

INSTALLATION

INSTALLATION

NOTE: Bench seats equipped with child restraint seats have an interlock feature that will not allow the seat back to fold forward with the child seat open.

(1) Place hinge in position on seat.

(2) Engage synchronizing cable end into (clip on left side) hinge latch release arm.

(3) Engage synchronizing cable housing into seat back hinge.

(4) Place seat back hinge in position on seat.

(5) Install bolts attaching seat back hinge to seat cushion frame. Tighten bolts to 48 N·m (35 ft. lbs.) torque.

(6) Install shoulder bolts attaching seat back hinge to seat back frame (Fig. 92). Tighten bolts to 34 N·m (25 ft. lbs.) torque.(Refer to 23 - BODY/SEATS/BENCH SEAT BACK - INSTALLATION)

BENCH SEAT BACK HINGE (Continued)

(7) Install bench seat back hinge covers. (Refer to 23 - BODY/SEATS/SEAT BACK HINGE COVERS - 50/50 SPLIT, BENCH - INSTALLATION)

(8) Verify seat back hinge operation and adjust synchronizing cable, if equipped. (Refer to 23 - BODY/SEATS/SYNCHRONIZING CABLE ADJUSTMENT)

SYNCHRONIZING CABLE ADJUSTMENT

NOTE:
Bench seats equipped with child restraint seats have an interlock feature that will not allow the seat back to fold forward with the child seat open.
If the seat back hinges do not release at the same time the synchronizing cable must be adjusted.

(1) Remove seat from vehicle. Refer to Owner's Manual for proper procedures.

(2) Disengage cable from the recline mechanism by pulling the cable end toward the front of the seat (Fig. 93).

(3) Pull U-shaped locking tab on self-adjusting mehcanism to disengage auto-adjust feature.

(4) Reattach self-adjusting mechanism, pulling against spring load to tighten cable.

(5) Press locking tab onto the adjusting mechanism to lock into place.

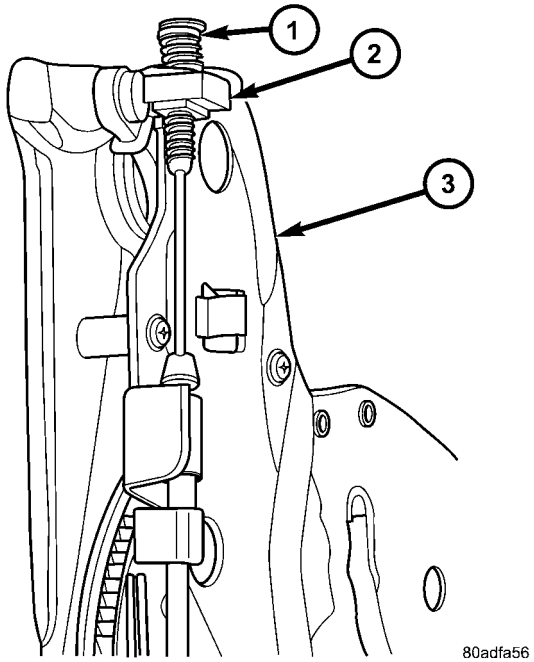

Fig. 93 SYNCHRONIZING CABLE

1 - CABLE END
2 - LOCKING TAB
3 - SETBACK HINGE

BENCH SEAT BACK

REMOVAL

NOTE: Bench seats equipped with child restraint seats have an interlock feature that will not allow the seat back to fold forward with the child seat open.

(1) Remove the headrests. (Refer to 23 - BODY/SEATS/HEADREST - REMOVAL)

(2) Remove the armrests, if equipped. (Refer to 23 - BODY/SEATS/ARMREST - REMOVAL)

(3) Remove the upper hinge cover. (Refer to 23 - BODY/SEATS/SEAT BACK HINGE COVERS - REMOVAL)

(4) Disengage synchronizing cable housing from seat back hinge, if equipped.

(5) Disengage synchronizing cable end from (clip on left side) hinge latch release arm, if equipped.

(6) Remove shoulder bolts attaching seat back hinge to seat back frame (Fig. 94).

(7) Remove the seat back.

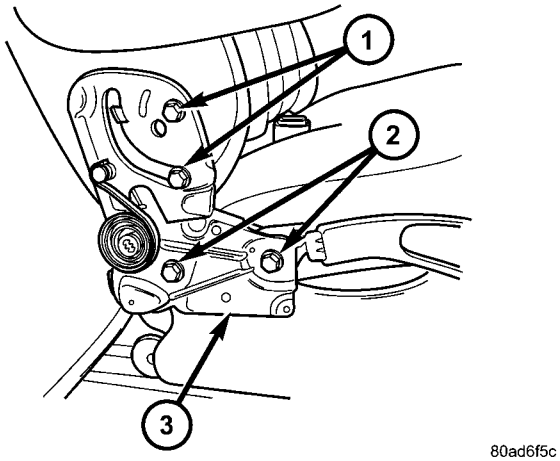

Fig. 94 SEAT BACK HINGE - TYPICAL

1 - SEATBACK FRAME SHOULDER BOLTS
2 - SEAT CUSHION FRAME BOLTS
3 - SEATBACK HINGE

INSTALLATION

NOTE: Bench seats equipped with child restraint seats have an interlock feature that will not allow the seat back to fold forward with the child seat open.

BENCH SEAT BACK (Continued)

(1) Install the seat back.
(2) Install the shoulder bolts attaching the seat back hinge to the seat back frame and tighten to 34 N·m (25 ft. lbs.) torque.
(3) Connect the synchronizing cable end from (clip on left side) hinge latch release arm, if equipped.
(4) Connect the synchronizing cable housing to the seat back hinge, if equipped.
(5) Install the upper hinge cover. (Refer to 23 - BODY/SEATS/SEAT BACK HINGE - INSTALLATION)
(6) Install the armrests, if equipped. (Refer to 23 - BODY/SEATS/ARMREST - INSTALLATION)
(7) Install the headrest sleeves. (Refer to 23 - BODY/SEATS/HEADREST SLEEVE - INSTALLATION)
(8) Adjust synchronizing cable, if equipped. (Refer to 23 - BODY/SEATS/SYNCHRONIZING CABLE ADJUSTMENT)

BENCH SEAT BACK COVER

REMOVAL

(1) Remove the bench seat back. (Refer to 23 - BODY/SEATS/BENCH SEAT BACK - REMOVAL)
(2) Remove the bench seat back panel. (Refer to 23 - BODY/SEATS/BENCH SEAT BACK PANEL - REMOVAL)
(3) Disconnect the cover J-straps.
(4) Remove the seat back cover from the seat back assembly.

INSTALLATION

(1) Install seat back cover onto the seat back frame and cushion assembly.
(2) Connect the J-straps.
(3) Install the bench seat back panel. (Refer to 23 - BODY/SEATS/BENCH SEAT BACK PANEL - INSTALLATION)
(4) Install the seat back. (Refer to 23 - BODY/SEATS/BENCH SEAT BACK - INSTALLATION)

BENCH SEAT TRACK

REMOVAL

(1) Remove second row seat from vehicle. Refer to Owner's Manual for proper procedure.
(2) Place seat on clean covered work surface.
(3) Disengage seat track adjuster link wire from track being removed.
(4) Remove nuts attaching track to seat riser (Fig. 95).
(5) Remove track from seat riser.

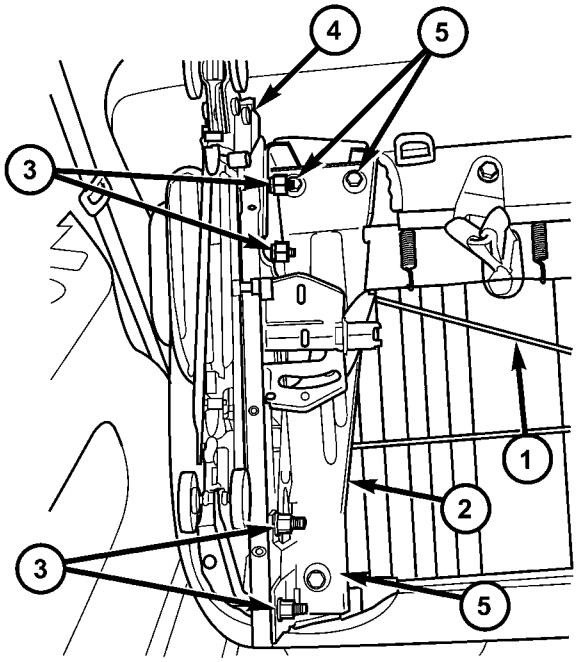

80a7510b

Fig. 95 BENCH SEAT TRACK

1 - SEAT TRACK ADJUSTER LINK
2 - RISER
3 - SEAT TRACK NUTS
4 - SEAT TRACK
5 - RISER BOLTS

INSTALLATION

(1) Place track in position on seat riser.
(2) Install nuts attaching track to seat riser. (Fig. 95). Tighten nuts to 48 N·m (35 ft. lbs.) torque.
(3) Engage seat track adjuster link wire onto track being installed.
(4) Install second row seat into vehicle.

PLASTIC GROCERY BAG RETAINER

REMOVAL

3-PASS BENCH SEAT

(1) Remove five screws attaching the plastic grocery bag retainer to the steel slats on the back frame (Fig. 96).

(2) Remove retainer.

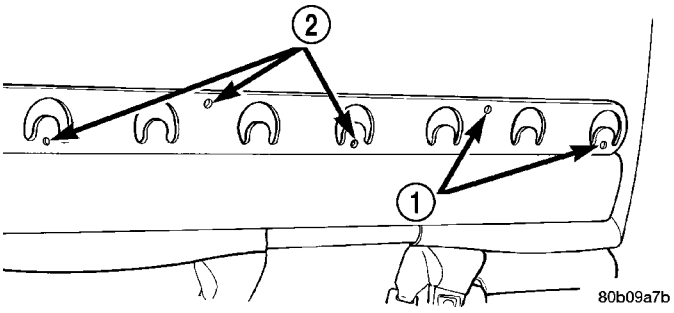

Fig. 96 PLASTIC GROCERY BAG RETAINER

1 - ATTACHING SCREWS
2 - ATTACHING SCREWS

50/50 SPLIT BENCH SEAT

(1) Remove the screws. (Fig. 97)

(2) Pull top of retainer away from the seat back and lift off of the two bottom attachment hooks.

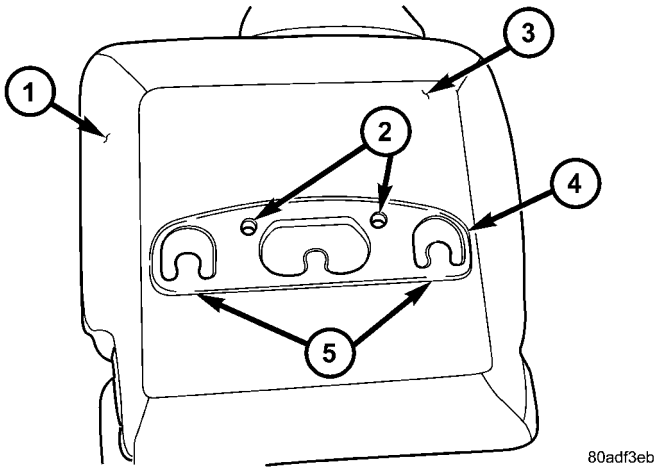

Fig. 97 PLASTIC GROCERY BAG RETAINER - 50/50 SPLIT

1 - SEAT BACK
2 - ATTACHING SCREWS
3 - SEAT BACK PANEL
4 - GROCERY BAG RETAINER
5 - ATTACHMENT HOOKS

INSTALLATION

3-PASS BENCH SEAT

(1) Place retainer in position.

(2) Install the five attaching screws and tighten 2 N·m (17 in. lbs.) torque.

50/50 SPLIT BENCH SEAT

(1) Engage bottom hooks of the retainer and place into position.

(2) Install the attaching screws and tighten 2 N·m (17 in. lbs.) torque.

UNDER SEAT STORAGE BIN

REMOVAL

(1) Release under seat storage bin latch and open bin.

(2) Depress lock tabs at the rear/top edge of the storage bin (Fig. 98).

(3) Pull storage bin from bucket seat riser.

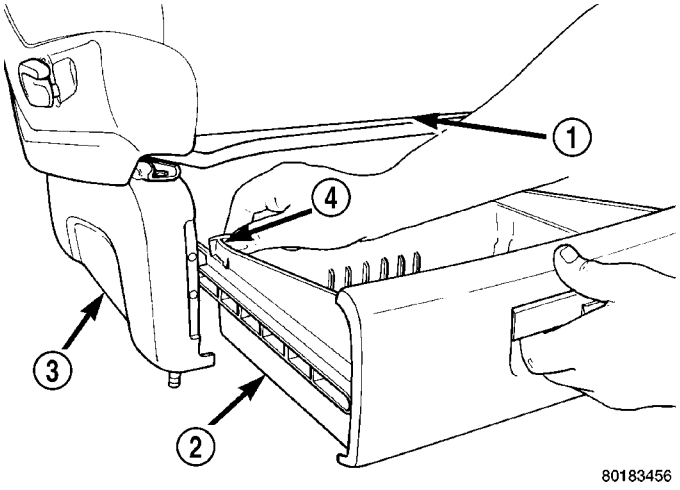

Fig. 98 STORAGE BIN

1 - PASS. SIDE BUCKET SEAT
2 - UNDER SEAT STORAGE BIN
3 - RISER
4 - LOCK TAB

INSTALLATION

(1) Engage storage bin tracks into guides on each side of seat riser.

(2) Push storage bin inward until lock tabs snap past retaining ridge on tracks

(3) Verify storage bin latch operation.

UNDER SEAT STORAGE BIN GUIDE

REMOVAL

(1) Remove under seat storage bin. (Refer to 23 - BODY/SEATS/UNDER SEAT STORAGE BIN - REMOVAL)

(2) Remove screws attaching storage bin track guide to seat riser (Fig. 99).

(3) Remove track guide from vehicle.

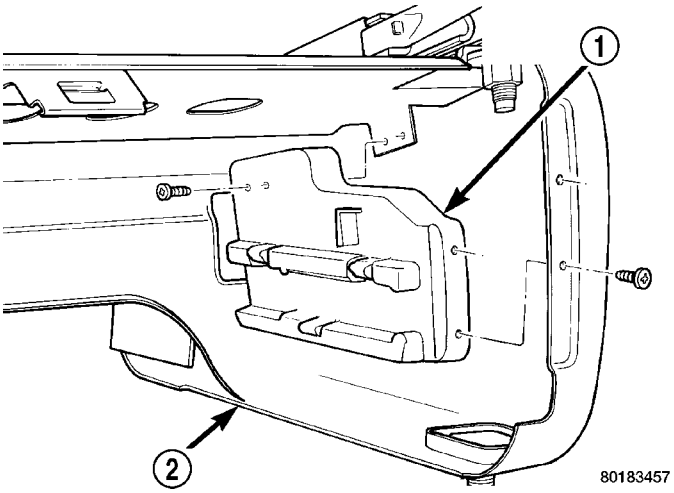

Fig. 99 UNDER SEAT STORAGE BIN GUIDE

1 - STORAGE BIN TRACK GUIDE
2 - RISER

INSTALLATION

(1) Place track guide in position on seat riser.

(2) Install screws attaching storage bin track guide to seat riser (Fig. 99). Tighten screws to 3.6 N·m (31.8 in lbs.) torque.

(3) Install under seat storage bin. (Refer to 23 - BODY/SEATS/UNDER SEAT STORAGE BIN - INSTALLATION)

UNDER SEAT STORAGE BIN LOCK/LATCH

REMOVAL

(1) Open under seat storage bin.

(2) Remove screws holding under seat storage bin lock/latch to storage bin (Fig. 100).

(3) Remove lock/latch from bin.

INSTALLATION

(1) Place lock/latch in position on storage bin.

(2) Install screws to hold lock/latch to storage bin (Fig. 100).

(3) Verify under seat storage bin latch operation.

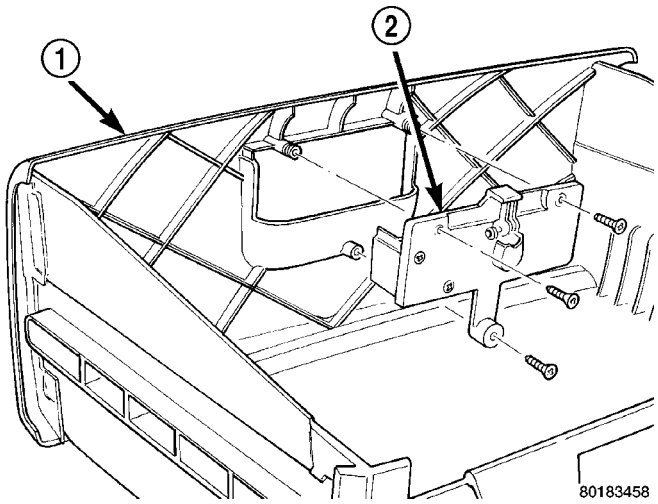

Fig. 100 UNDER SEAT STORAGE BIN LOCK/LATCH

1 - UNDER SEAT STORAGE BIN
2 - LOCK/LATCH

LUMBAR SUPPORT

REMOVAL

(1) Remove screw attaching lumbar handle to seat back (Fig. 101).

(2) Remove seat back assembly from cushion.

(3) Detrim the seat back assembly.

(4) Remove frame and replace.

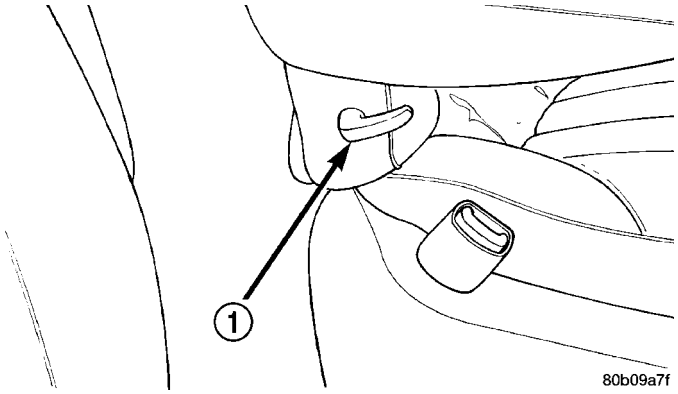

Fig. 101 LUMBAR HANDLE

1 - LUMBAR HANDLE

INSTALLATION

(1) Trim the seat back frame.

(2) Install seat back assembly to cushion.

(3) Install attaching screw to lumbar handle. The handle is to be installed, between two and three O'clock position. Tighten screw to 1 N·m (11 ft. lbs.) torque.

(4) Test lumbar operation.

SEAT RISER LATCH LOCKING LINK

REMOVAL

(1) Remove seat as necessary to access latch locking link.

NOTE: If the seat is locked in the seated position and cannot be tilted forward, it can be released by reaching into the escutcheons with a hook tool or a finger from the rear. Pulling the latch toward the rear of the vehicle will unlock the seat latch allowing the seat to tilt forward.

(2) Using a flat bladed tool pry plastic latch locking link free from both pins (Fig. 102).
(3) Remove link from seat.

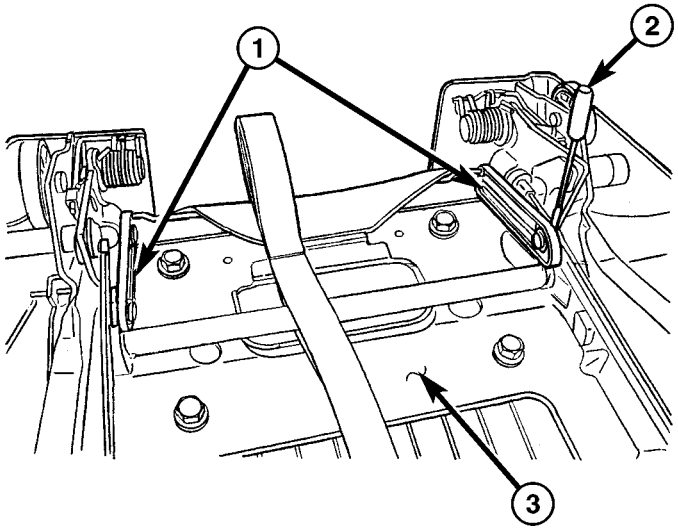

810bce6b

Fig. 102 SEAT RISER LATCH LOCKING LINK

1 - LATCH LOCKING LINK
2 - FLAT BLADED TOOL
3 - SEAT RISER

INSTALLATION

(1) Place latch locking link into position (Fig. 102).
(2) Press latch locking link onto pins lock and seat fully.
(3) Place seat into position and verify proper operation.

QUAD BUCKET SEAT SIDE SHIELD/CUP HOLDER - FLAP AND SPRING ASSEMBLY

REMOVAL

(1) Inspect the flap retaining tabs on cup holder for damage (Fig. 103).

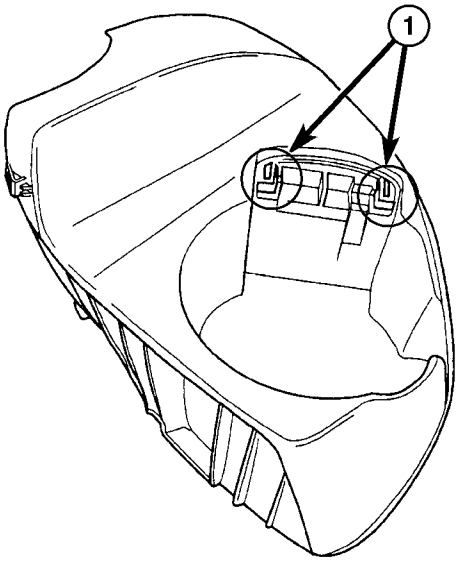

811d7392

Fig. 103 CUP HOLDER FLAP RETAINING TABS

1 - FLAP RETAINING TABS

(2) If cracked or broken, replace quad bucket seat side shield with cup holder. (Refer to 23 - BODY/SEATS/SEAT SIDE SHIELD - REMOVAL).
(3) If flap retaining tabs are not damaged replace flap and spring assembly.

INSTALLATION

(1) Ensure the spring is position into mounting tab (Fig. 104).

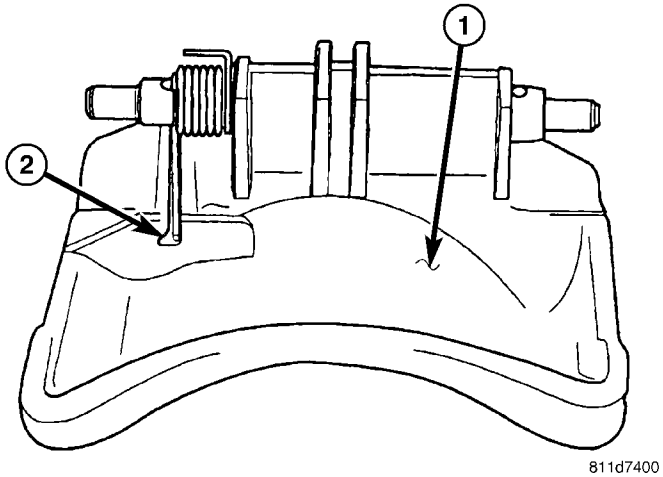

811d7400

Fig. 104 FLAP AND SPRING ASSEMBLY

1 - CUP HOLDER FLAP
2 - SPRING IN MOUNTING TAB

(2) Hold flap and spring assembly in the horizontal position and snap into cup holder flap retaining tabs.
(3) Verify cup holder flap operation several times to ensure proper operation. Flap should fold downward with little effort and spring back to a horizontal position when released.

BOTTOM OF SEAT CUSHION PAN PANEL-THIRD ROW - FOLD-IN-FLOOR

REMOVAL

(1) Fold the third row seat with back down.
(2) Remove handle from cushion.
(3) Using a trim tool, remove bottom side of the cushion pan panel (Fig. 105).

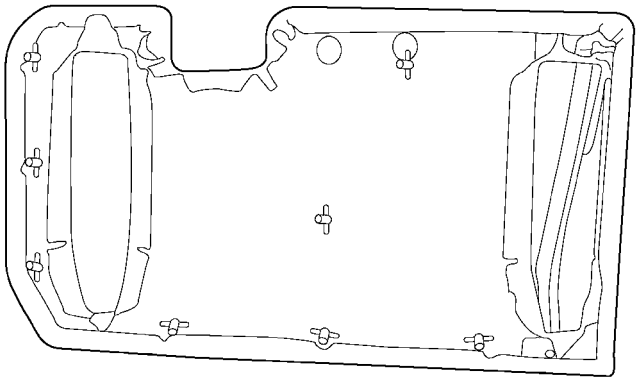

Fig. 105 THIRD ROW CUSHION PAN & COVER

INSTALLATION

(1) Place bottom side of the cushion pan panel into position (Fig. 106).
(2) Press on back of cushion pan panel to seat the fasteners.
(3) Install handle on cushion.
(4) Place seat in the up right position.

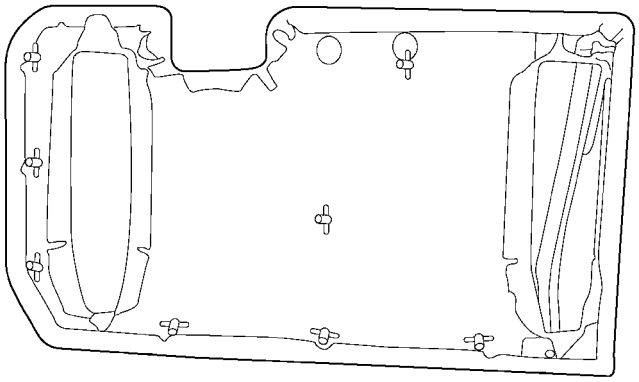

Fig. 106 THIRD ROW CUSHION PAN & COVER

HEADREST SLEEVE - THIRD ROW - FOLD-IN-FLOOR

REMOVAL

(1) Remove headrest (Fig. 107).
(2) Using a trim tool remove sleeve by prying sleeve away from the seat back frame to unlock it (Fig. 108)
(3) Pull headrest sleeve upward and out the top of the seat back frame and remove from seat.

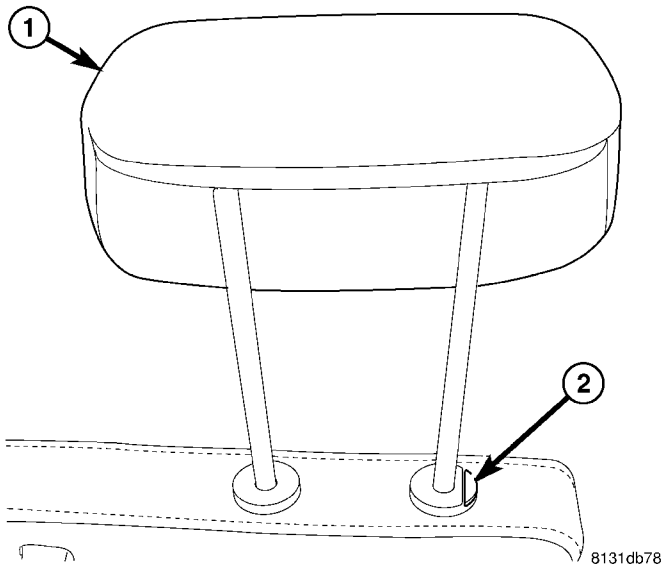

Fig. 107 HEADREST

1 - HEADREST
2 - DEPRESS TAB

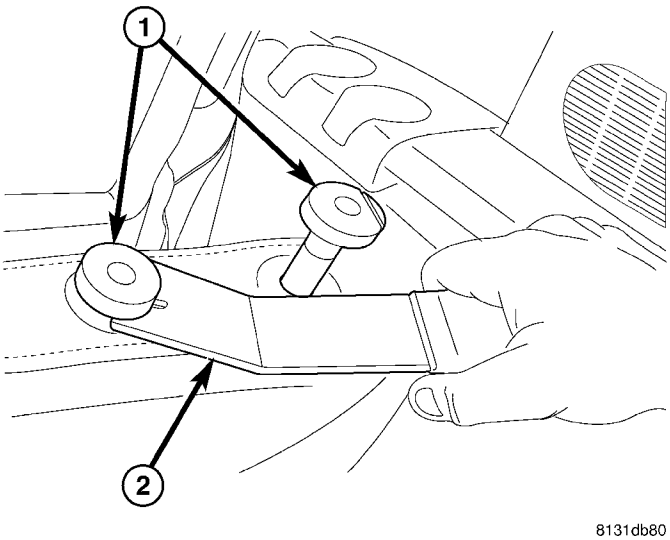

Fig. 108 REMOVING HEADREST SLEEVES

1 - HEADREST SLEEVES
2 - TRIM TOOL

HEADREST SLEEVE - THIRD ROW - FOLD-IN-FLOOR (Continued)

INSTALLATION

(1) Place headrest sleeve into position and push downward until sleeve locks into position (Fig. 109).
(2) Install headrest (Fig. 107).

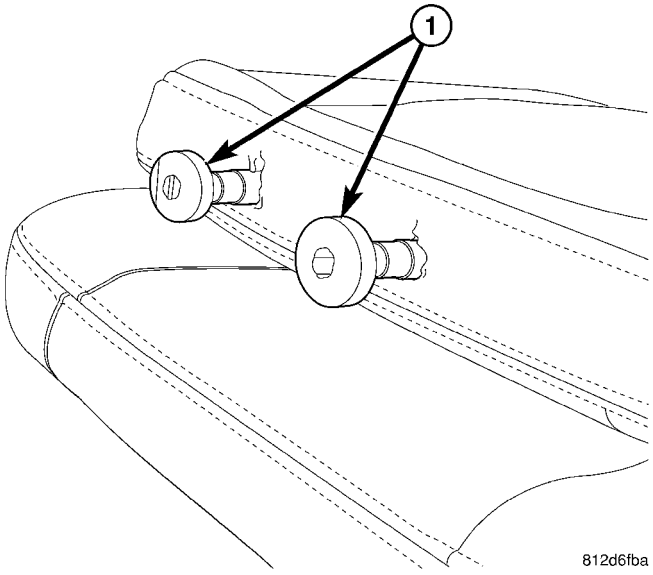

Fig. 109 HEADREST SLEEVES

1 - SLEEVES

SEAT - THIRD ROW - FOLD-IN-FLOOR

REMOVAL

(1) Fold third row seat into floor well.
(2) Using a trim stick, unclip anchor molding (Fig. 110).
(3) Remove third row seat attaching bolts (Fig. 111).
(4) Raise seats to the upright position.
(5) Remove the rear seat lower trim cover (Fig. 112).
(6) Remove rear attaching bolts (Fig. 113).
(7) Remove rear seat from vehicle.

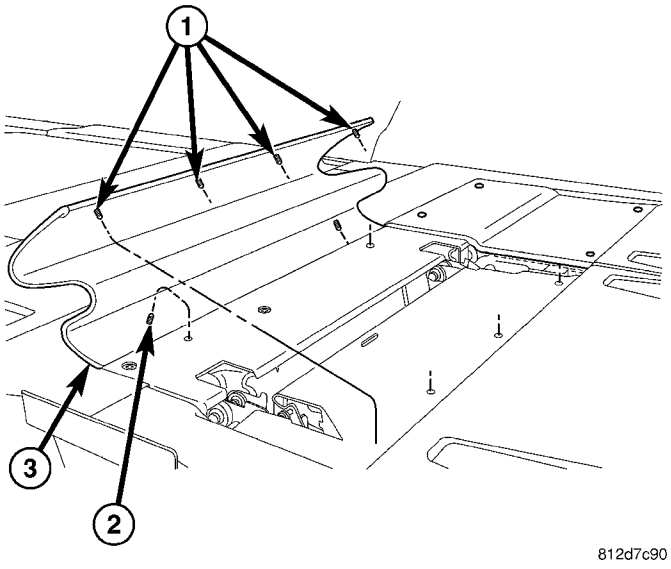

Fig. 110 ANCHOR MOLDING

1 - 2-WAY CLIPS INTO SEAT FRAME
2 - 4-WAY LOCATING PINS (2)
3 - FRONT SEAT ANCHOR MOLDING

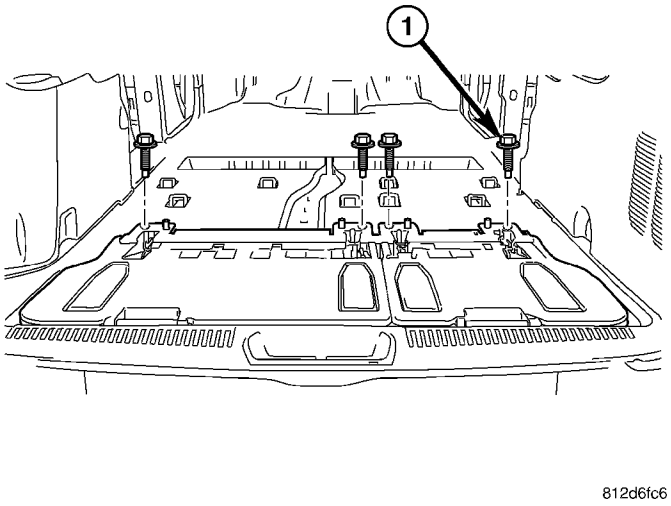

Fig. 111 THIRD ROW SEATS

1 - ATTACHING BOLTS

SEAT - THIRD ROW - FOLD-IN-FLOOR (Continued)

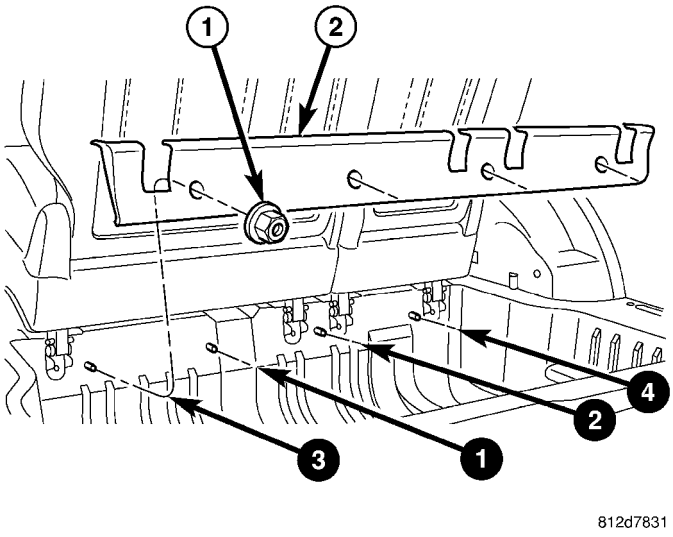

Fig. 112 REAR SEAT TRIM COVER

1 - PLASTIC NUTS ON WELD STUDS
2 - LOWER TRIM COVER

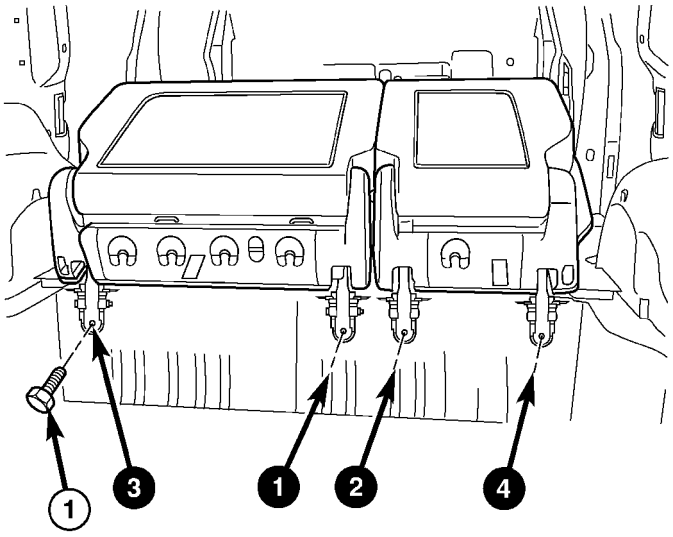

Fig. 113 THIRD ROW SEAT

1 - ATTACHING BOLTS

INSTALLATION

(1) Place rear seat into position (Fig. 114).

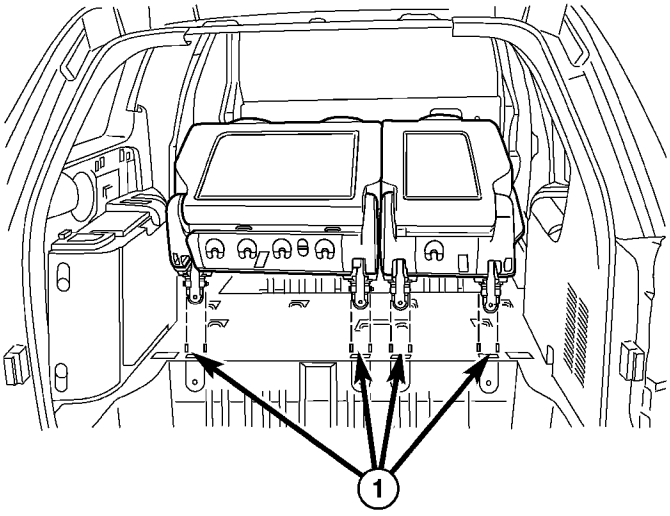

Fig. 114 THIRD ROW SEAT INSTALLED

1 - ALIGN SEAT BRACKETS WITH REAR EDGE OF TUB

(2) Install rear attaching bolts to seat (Fig. 115). Tighten bolts to 54 N·m (40 ft. lbs.) torque and follow tightening sequence.

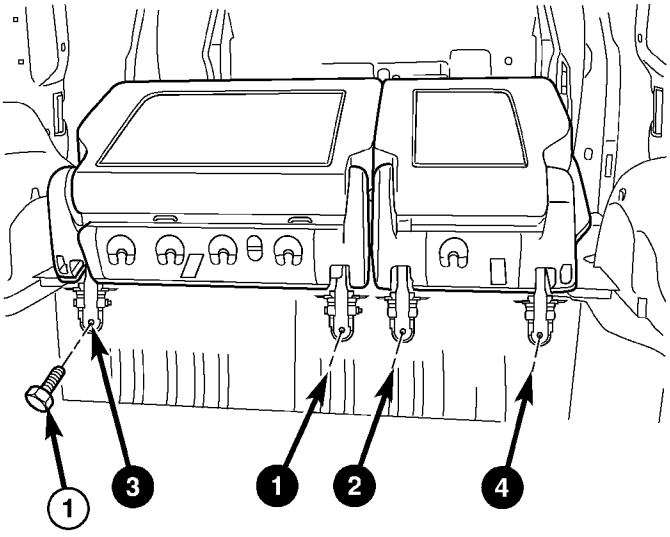

Fig. 115 THIRD ROW SEAT

1 - ATTACHING BOLTS

SEAT - THIRD ROW - FOLD-IN-FLOOR (Continued)

(3) Fold the rear seat into the floor well.
(4) Install attaching bolts (Fig. 116). Tighten bolts to 54 N·m (40 ft. lbs.) torque.
(5) Place the rear seat lower trim cover into position and press clips into the lock position (Fig. 117).

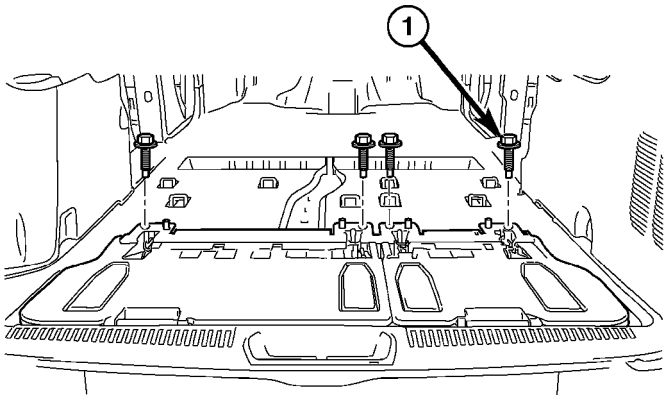

812d6fc6

Fig. 116 THIRD ROW SEATS

1 - ATTACHING BOLTS

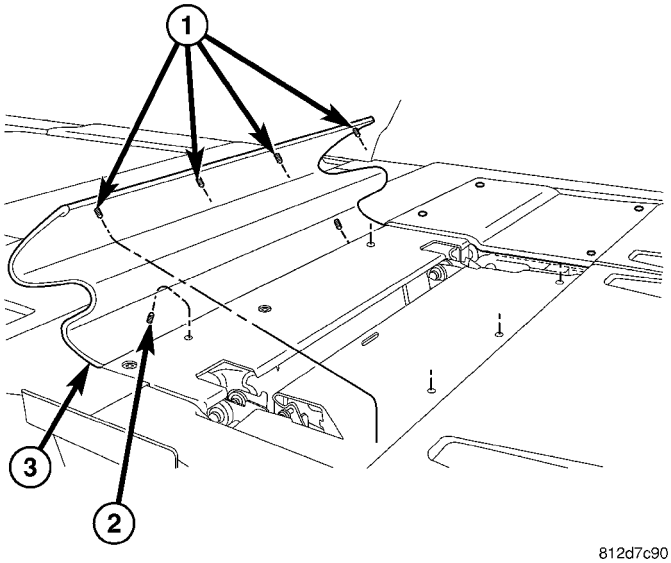

812d7c90

Fig. 117 ANCHOR MOLDING

1 - 2-WAY CLIPS INTO SEAT FRAME
2 - 4-WAY LOCATING PINS (2)
3 - FRONT SEAT ANCHOR MOLDING

(6) Raise third row seat into upright position.
(7) Install lower trim cover with plastic nuts and tighten them in sequence (Fig. 118).

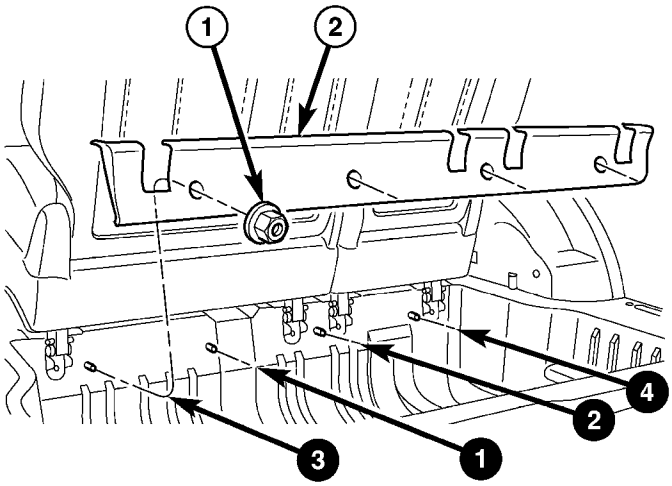

812d7831

Fig. 118 REAR SEAT TRIM COVER

1 - PLASTIC NUTS ON WELD STUDS
2 - LOWER TRIM COVER

SEAT BACK COVER/FOAM - THIRD ROW - FOLD-IN-FLOOR

REMOVAL

(1) Remove seat back panel.
(2) Disengage J-straps (Fig. 119).
(3) Remove seat cover and foam from seat back frame (Fig. 120).
(4) Separate cover and foam.

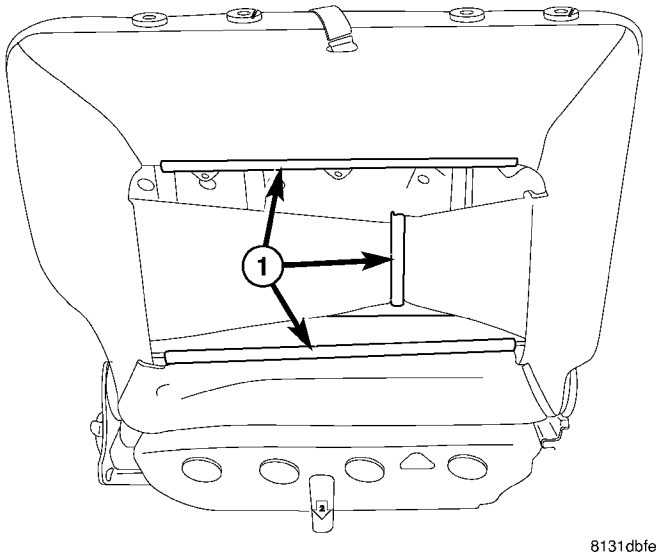

8131dbfe

Fig. 119 THIRD ROW SEAT BACK

1 - J-STRAPS

SEAT BACK COVER/FOAM - THIRD ROW - FOLD-IN-FLOOR (Continued)

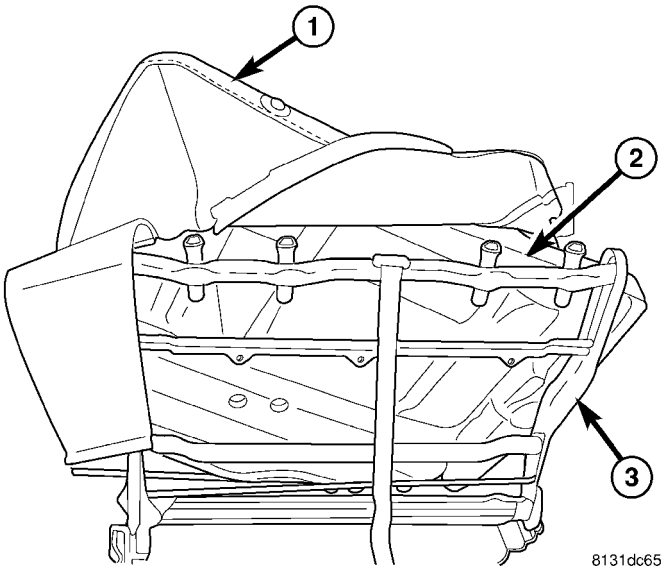

Fig. 120 THIRD ROW SEAT BACK COVER & FOAM

1 - SEAT BACK COVER
2 - FOAM
3 - SEAT BACK FRAME

INSTALLATION

(1) Place seat back foam into cover.

(2) Install seat cover and foam onto seat back frame (Fig. 121).

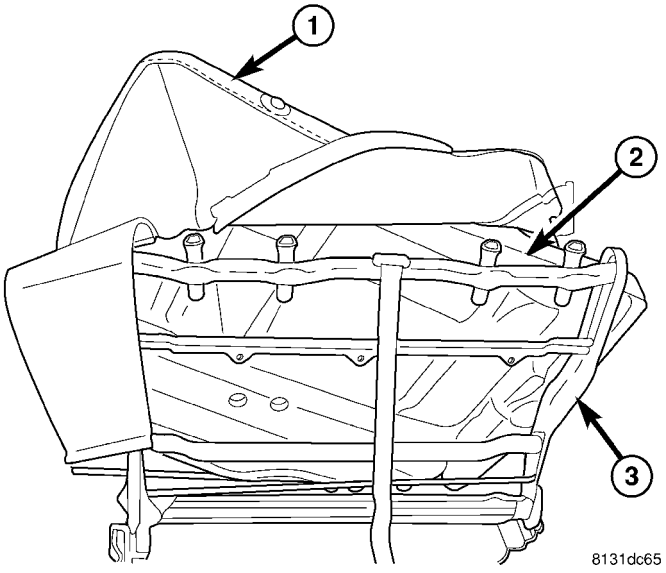

Fig. 121 THIRD ROW SEAT BACK COVER & FOAM

1 - SEAT BACK COVER
2 - FOAM
3 - SEAT BACK FRAME

(3) Engage J-straps (Fig. 122).

(4) Install seat back panel. (Refer to 23 - BODY/SEATS/SEAT BACK - INSTALLATION).

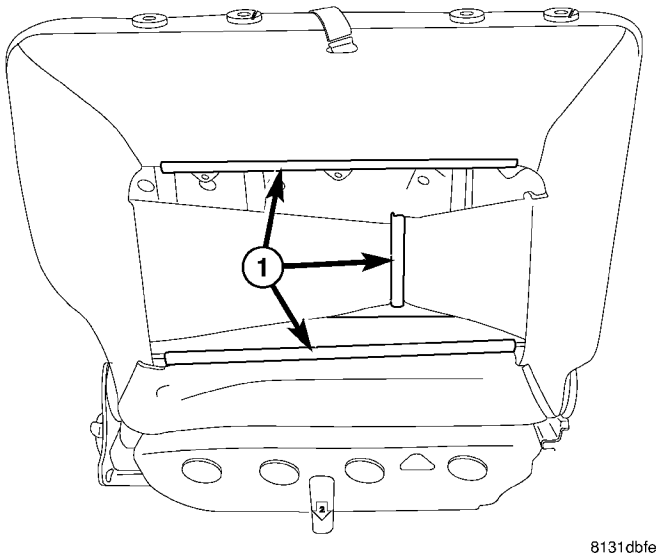

Fig. 122 THIRD ROW SEAT BACK

1 - J-STRAPS

SEAT BACK FRAME - THIRD ROW - FOLD-IN-FLOOR

REMOVAL

(1) Remove seat back cover and foam. (Refer to 23 - BODY/SEATS/SEAT BACK COVER/FOAM - REMOVAL).

(2) Remove strap at top of frame (Fig. 123).

(3) Remove two bolts on each side of frame.

(4) Remove seat back frame from seat.

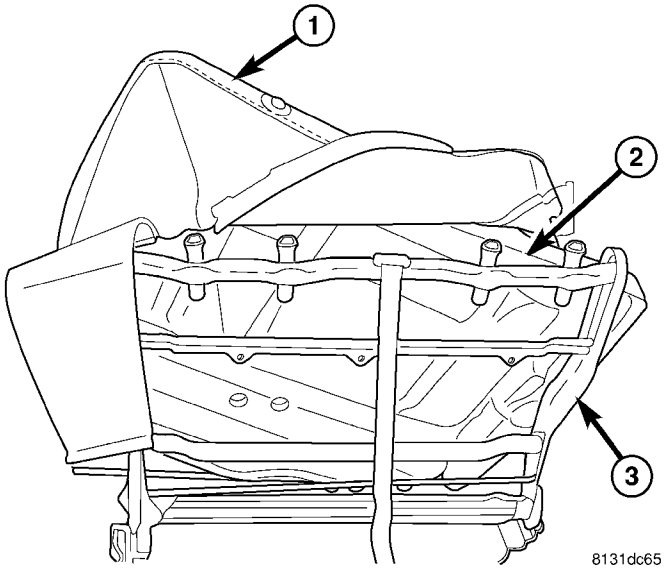

Fig. 123 THIRD ROW SEAT BACK COVER & FOAM

1 - SEAT BACK COVER
2 - FOAM
3 - SEAT BACK FRAME

SEAT BACK FRAME - THIRD ROW - FOLD-IN-FLOOR (Continued)

INSTALLATION

(1) Place seat back frame into position.
(2) Install two bolts on each side of seat back frame.
(3) Install strap at top of frame (Fig. 123).
(4) Install seat back cover and foam. (Refer to 23 - BODY/SEATS/SEAT BACK COVER - INSTALLATION).

SEAT BELT CENTER LAP BELT - FOLD-IN-FLOOR

REMOVAL

(1) Set third row seat in the upright position.
(2) Remove the third row cushion back cover (Fig. 124).

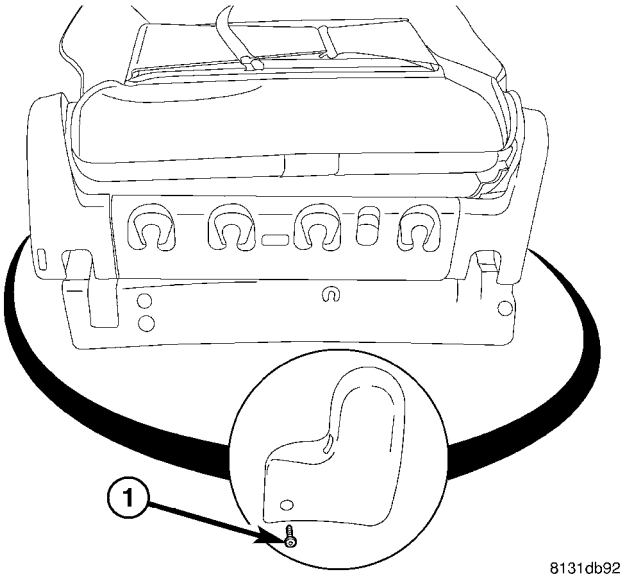

Fig. 124 THIRD ROW SEAT BACK COVER

1 - ATTACHING SCREW

(3) Fold the third row seat into floor well.
(4) Remove seat cushion pan carpet to floor panel using a trim tool (Fig. 125).
(5) Using a trim tool, remove seat cushion pan bottom side panel (Fig. 126).
(6) Remove handle from cushion.
(7) Remove seat cushion cover and foam from cushion pan. (Refer to 23 - BODY/SEATS/SEAT CUSHION COVER/FOAM - REMOVAL).

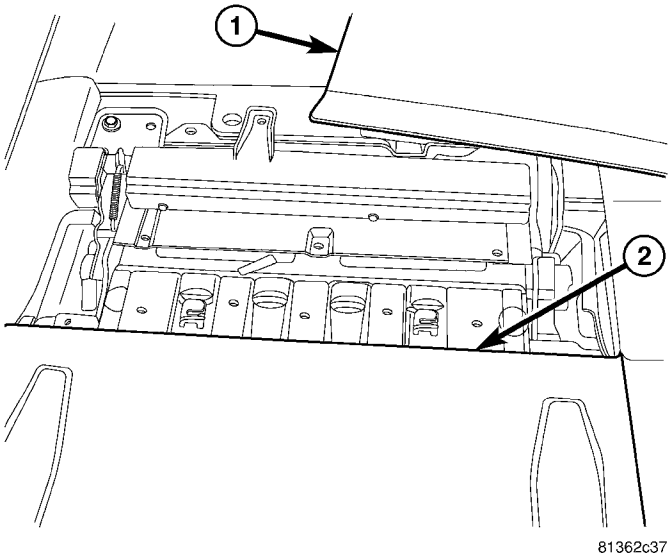

Fig. 125 SEAT CUSHION CARPETING

1 - CARPET FROM SEAT TO FLOOR
2 - SEAT CUSHION PAN COVER

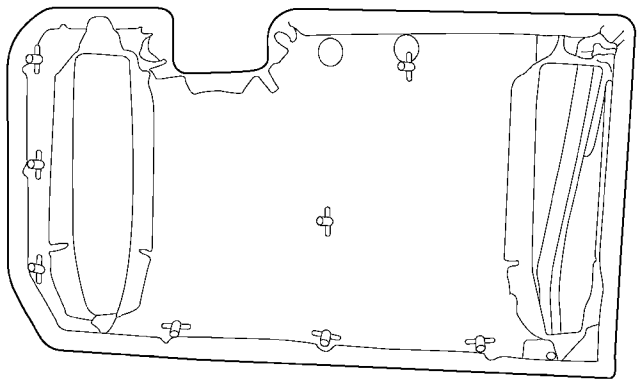

Fig. 126 THIRD ROW CUSHION PAN COVER

(8) Remove nut attaching center tip half and buckle together.
(9) Remove center tip half and buckle from seat (Fig. 127).

INSTALLATION

(1) Place seat with seat cushion in the upright position.
(2) Place center tip half and buckle into position.
(3) Install nut attaching center tip and buckle (Fig. 127).

SEAT BELT CENTER LAP BELT - FOLD-IN-FLOOR (Continued)

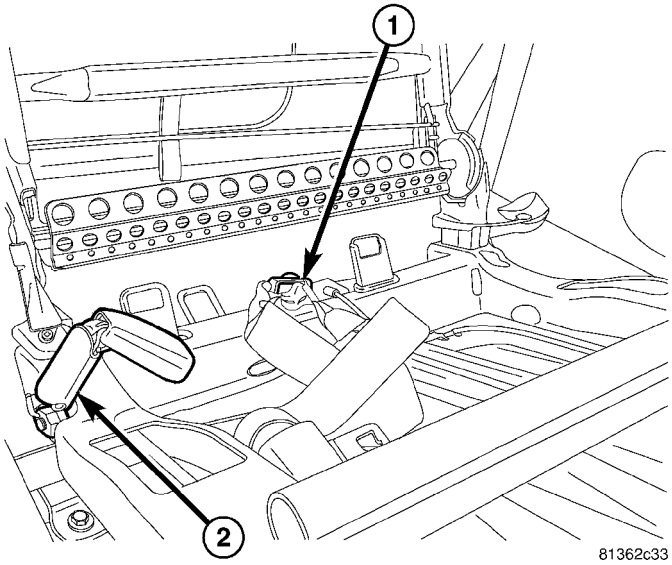

Fig. 127 CENTER TIP AND BUCKLE - THIRD ROW - FOLD-IN-FLOOR

1 - CENTER TIP HALF AND BUCKLE
2 - SEAT BELT BUCKLE

(4) Install seat cushion cover and foam. (Refer to 23 - BODY/SEATS/SEAT CUSHION COVER/FOAM - INSTALLATION).

(5) Install handle to cushion.

(6) Install seat cushion pan bottom side panel (Fig. 126).

(7) Fold the third row seat into floor well.

(8) Place seat cushion pan carpet to floor panel into position and push on panel to seat push pin fasteners (Fig. 125).

(9) Third row seat in the upright position.

(10) Install the third row cushion back cover (Fig. 124).

SEAT BACK PANEL - THIRD ROW -FOLD-IN-FLOOR

REMOVAL

(1) Third row seat in the upright position.

(2) Using a trim tool, remove seat back panel (Fig. 128).

INSTALLATION

(1) Place seat back panel into position (Fig. 128).

(2) Push on seat back panel to seat push pin fasteners.

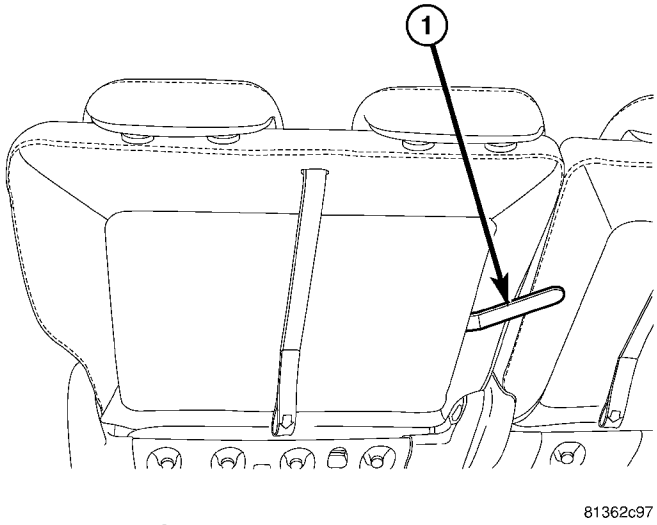

Fig. 128 SEAT BACK PANEL

1 - TRIM STICK

SEAT BACKSTOW STRAP - THIRD ROW - FOLD-IN-FLOOR

REMOVAL

(1) Third row seat in the upright position.

(2) Remove seat back cover and foam as necessary to access stow strap

(3) Slide stow strap from frame loop (Fig. 129).

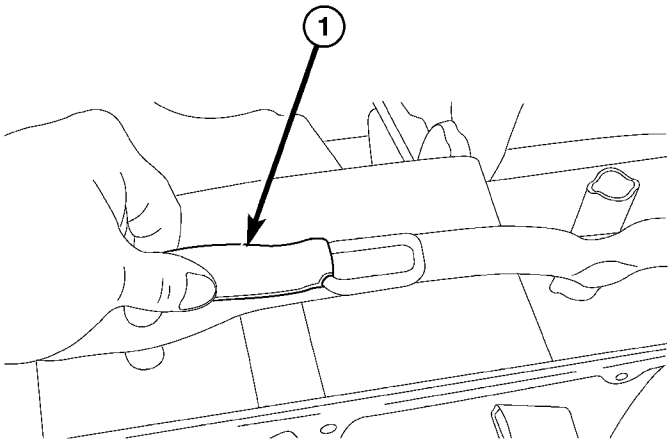

Fig. 129 THIRD ROW SEAT BACK UP STOW STRAP

1- STOW STRAP

INSTALLATION

(1) Slide stow strap onto frame loop (Fig. 129).

(2) Install seat back cover and foam. (Refer to 23 - BODY/SEATS/SEAT CUSHION COVER/FOAM - INSTALLATION).

SEAT CUSHION COVER/FOAM - THIRD ROW - FOLD-IN-FLOOR

REMOVAL

(1) Third row seat in the upright position.
(2) Remove the third row cushion side shield (Fig. 130).

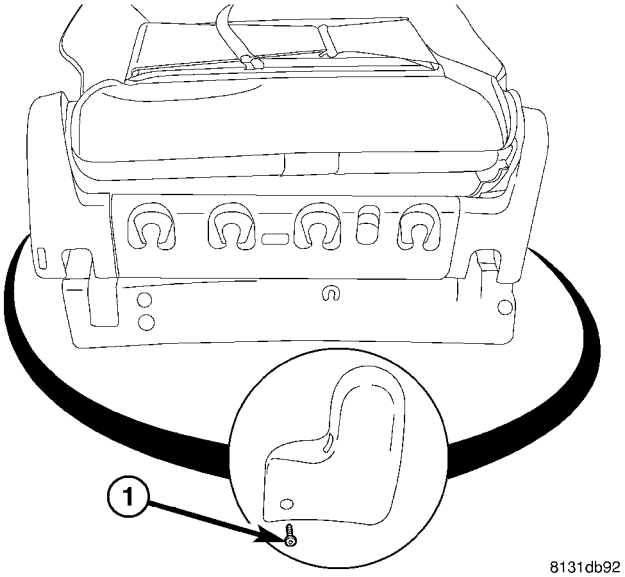

Fig. 130 THIRD ROW SEAT BACK COVER

1 - ATTACHING SCREW

(3) Fold the third row seat into floor well.
(4) Remove seat cushion pan carpet to floor panel using a trim tool (Fig. 131).

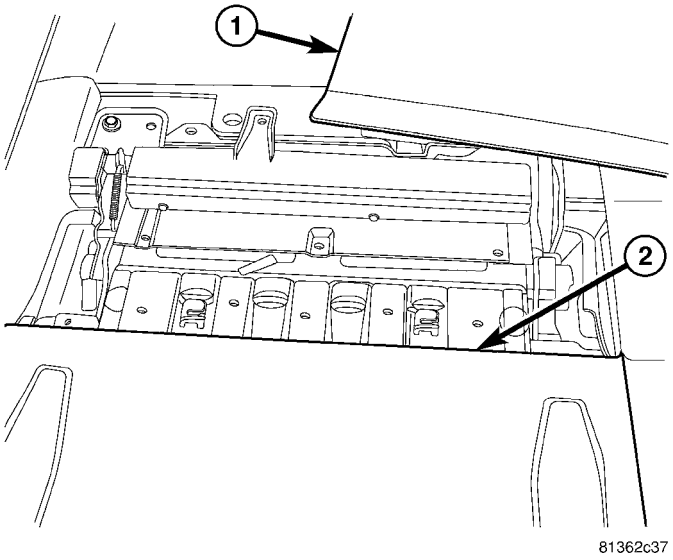

Fig. 131 SEAT CUSHION CARPETING

1 - CARPET FROM SEAT TO FLOOR
2 - SEAT CUSHION PAN COVER

(5) Using a trim tool, remove seat cushion pan bottom side panel (Fig. 132).

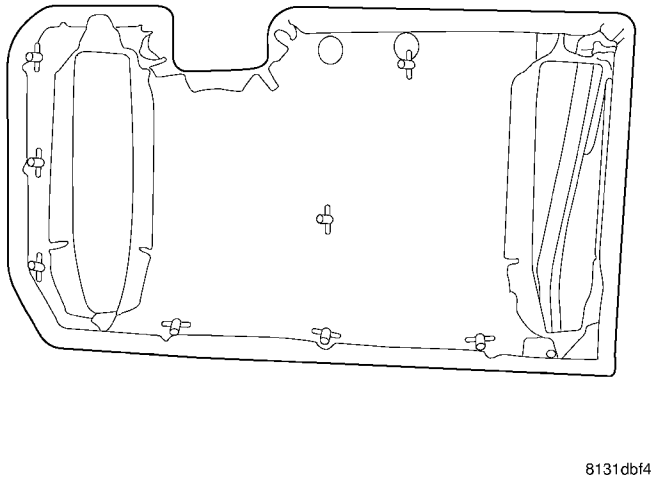

Fig. 132 THIRD ROW CUSHION PAN COVER

(6) Remove handle from cushion.
(7) Place seat with the seat back down position.
(8) Disengage seat cushion cover J-straps from cushion pan (Fig. 133).
(9) Remove cover and foam from cushion pan.
(10) Separate the cover and foam.

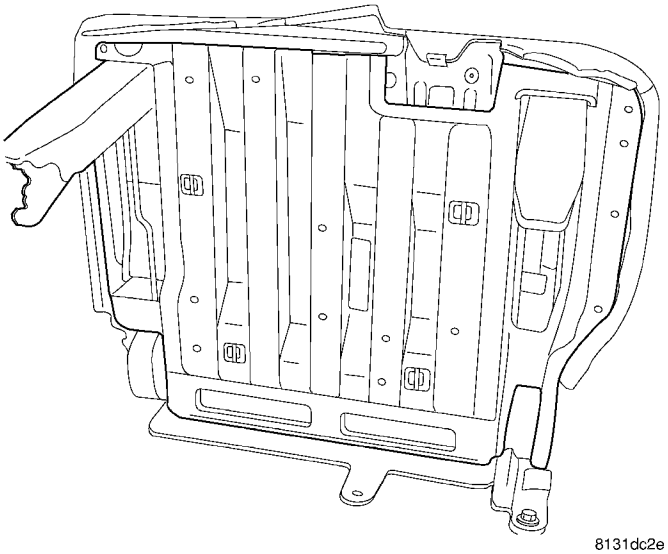

Fig. 133 THIRD ROW CUSHION PAN

INSTALLATION

(1) Place the seat cushion cover and foam together.
(2) Install seat cushion cover and foam onto cushion pan.
(3) Engage seat cushion cover J-straps to cushion pan (Fig. 133).
(4) Install handle on cushion.

(5) Fold seat into floor well.
(6) Install seat cushion pan bottom side panel (Fig. 132).
(7) Install seat cushion pan carpet to floor panel (Fig. 131).
(8) Install the third row cushion side shield (Fig. 130).
(9) Place third row seat in the upright position.

SIDE SHIELD CUP HOLDER - FOLD-IN-FLOOR

REMOVAL

(1) Open cup holder door.
(2) Remove two screws attaching cup holder to side shield (Fig. 134).

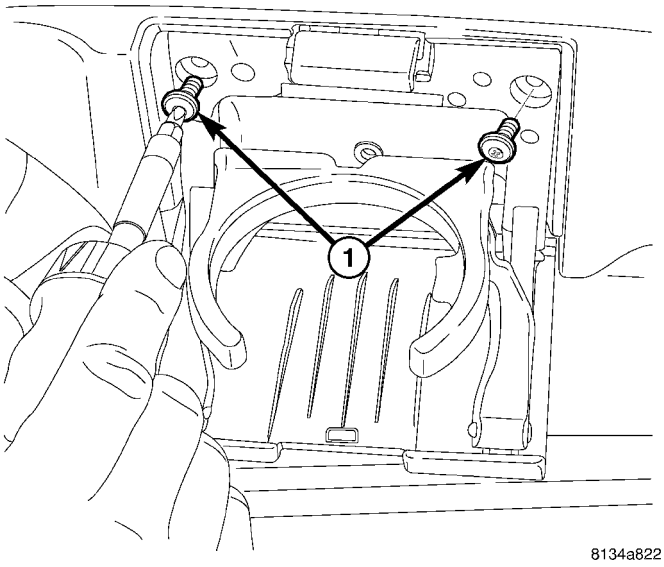

Fig. 134 SECOND ROW SEAT CUP HOLDER

1 - ATTACHING SCREWS

INSTALLATION

(1) Place cup holder into position (Fig. 134).
(2) Install the two cup holder attaching screws.

SEAT RECLINER/FOLD FORWARD MECHANISM -THIRD ROW -FOLD-IN-FLOOR

REMOVAL

(1) Remove seat back frame. (Refer to 23 - BODY/SEATS/SEAT BACK FRAME - REMOVAL).
(2) Remove the side shields from seat cushion.
(3) Remove two recliner/fold forward mechanism bolts on each side from cushion pan.
(4) Remove the recliner/fold forward mechanism from seat cushion pan.

INSTALLATION

(1) Place recliner/fold forward mechanism on seat cushion pan.
(2) Install two recliner/fold forward mechanism bolts on each side to cushion pan.
(3) Install the side shields to seat cushion.
(4) Install seat back frame. (Refer to 23 - BODY/SEATS/SEAT BACK FRAME - INSTALLATION).

STATIONARY GLASS

TABLE OF CONTENTS

page

WINDSHIELD
DESCRIPTION 161
WARNING
WINDSHIELD SAFETY PRECAUTIONS 161
REMOVAL 161
INSTALLATION 162
SLIDING DOOR GLASS
REMOVAL 163
INSTALLATION 163
QUARTER WINDOW
REMOVAL 164
INSTALLATION 164
LIFTGATE GLASS
REMOVAL 164
INSTALLATION 164

WINDSHIELD

DESCRIPTION

The windshield is attached to the window frame with urethane adhesive. The urethane adhesive is applied cold and seals the surface area between the window opening and the glass. The primer adheres the urethane adhesive to the windshield.

It is difficult to salvage a windshield during the removal operation. The windshield is part of the structural support for the roof. The urethane bonding used to secure the windshield to the fence is difficult to cut or clean from any surface. If the moldings are set in urethane, it would also be unlikely they could be salvaged. Before removing the windshield, check the availability of the windshield and moldings from the parts supplier.

WARNING

WINDSHIELD SAFETY PRECAUTIONS

WARNING: DO NOT OPERATE THE VEHICLE WITHIN 24 HOURS OF WINDSHIELD INSTALLATION. IT TAKES AT LEAST 24 HOURS FOR URETHANE ADHESIVE TO CURE. IF IT IS NOT CURED, THE WINDSHIELD MAY NOT PERFORM PROPERLY IN AN ACCIDENT.
URETHANE ADHESIVES ARE APPLIED AS A SYSTEM. USE GLASS CLEANER, GLASS PREP SOLVENT, GLASS PRIMER, PVC (VINYL) PRIMER AND PINCH WELD (FENCE) PRIMER PROVIDED BY THE ADHESIVE MANUFACTURER. IF NOT, STRUCTURAL INTEGRITY COULD BE COMPROMISED.
DAIMLERCHRYSLER DOES NOT RECOMMEND GLASS ADHESIVE BY BRAND. TECHNICIANS SHOULD REVIEW PRODUCT LABELS AND TECHNICAL DATA SHEETS, AND USE ONLY ADHESIVES THAT THEIR MANUFACTURES WARRANT WILL RESTORE A VEHICLE TO THE REQUIREMENTS OF FMVSS 212. TECHNICIANS SHOULD ALSO INSURE THAT PRIMERS AND CLEANERS ARE COMPATIBLE WITH THE PARTICULAR ADHESIVE USED.
BE SURE TO REFER TO THE URETHANE MANUFACTURER'S DIRECTIONS FOR CURING TIME SPECIFICATIONS, AND DO NOT USE ADHESIVE AFTER ITS EXPIRATION DATE.
VAPORS THAT ARE EMITTED FROM THE URETHANE ADHESIVE OR PRIMER COULD CAUSE PERSONAL INJURY. USE THEM IN A WELL-VENTILATED AREA.
SKIN CONTACT WITH URETHANE ADHESIVE SHOULD BE AVOIDED. PERSONAL INJURY MAY RESULT.
ALWAYS WEAR EYE AND HAND PROTECTION WHEN WORKING WITH GLASS.

CAUTION: Protect all painted and trimmed surfaces from coming in contact with urethane or primers. Be careful not to damage painted surfaces when removing moldings or cutting urethane around windshield.

REMOVAL

WINDSHIELD REMOVAL – EXTERIOR METHOD

The urethane adhesive holding the windshield to the opening pinch weld (fence) can be cut using a sharp cold knife from the exterior of the vehicle. Using the cold knife method is effective if the windshield is already broken. If the glass must be salvaged, cutting the urethane adhesive from the interior of the vehicle using a reciprocating or oscillating power knife is recommended.

(1) Remove inside rear view mirror.
(2) Remove windshield wiper arms.
(3) Remove cowl cover.

WINDSHIELD (Continued)

(4) Remove A-pillar trim panels.

(5) Place protective covers over instrument panel and hood.

(6) Remove windshield molding. Using pliers, pull outward on molding at the bottom of A-pillars.

(7) Using a sharp cold knife, cut urethane adhesive holding the windshield to the A-pillars, roof header and cowl pinch weld fences (Fig. 1). A power cutting device can be used if available.

(8) Remove windshield from vehicle.

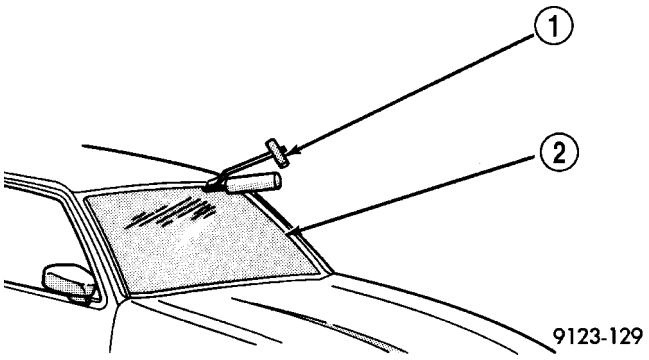

Fig. 1 CUT URETHANE AROUND WINDSHIELD

1 - COLD KNIFE
2 - WINDSHIELD

WINDSHIELD REMOVAL – INTERIOR METHOD

(1) Remove inside rear view mirror.

(2) Remove instrument panel top cover. Refer to Group 8E, Instrument Panel and Systems.

(3) Remove A-pillar trim covers.

(4) Place protective covers over instrument panel and hood.

(5) Using a reciprocating or oscillating power knife, cut urethane adhesive holding the windshield to the A-pillars, roof header and cowl pinch weld fences. Refer to instructions provided with the equipment being used.

(6) Remove windshield from vehicle.

INSTALLATION

The urethane adhesive holding the windshield to the opening pinch weld (fence) can be cut using a sharp cold knife from the exterior of the vehicle. Using the cold knife method is effective if the windshield is already broken. If the glass must be salvaged, cutting the urethane adhesive from the interior of the vehicle using a reciprocating or oscillating power knife is recommended.

CAUTION: Open the left front door glass before installing windshield to avoid pressurizing the passenger compartment. If a door is slammed before urethane bonding is cured, water leaks can result. Allow the urethane at least 24 hours to cure before returning the vehicle to use.

To avoid stressing the replacement windshield, the urethane bonding material on the windshield fence should be smooth and consistent to the shape of the replacement windshield. The support spacers should be cleaned and properly installed on weld studs or repair screws at bottom of windshield opening.

(1) Place replacement windshield into windshield opening and position glass in the center of the opening against the compression spacers.

(2) Verify the glass lays evenly against the pinch urethane adhesive remaining on the weld fence at the sides, top and bottom of the replacement windshield. If not, the pinch weld fence must be formed to the shape of the new glass.

(3) Remove replacement windshield from windshield opening.

(4) Position the windshield inside up on a suitable work surface with two padded, wood 10 cm by 10 cm by 50 cm (4 in. by 4 in. by 20 in.) blocks, placed parallel 75 cm (2.5 ft.) apart (Fig. 2).

WARNING: DO NOT USE SOLVENT BASED GLASS CLEANER TO CLEAN WINDSHIELD BEFORE APPLYING GLASS PREP AND PRIMER. POOR ADHESION CAN RESULT.

(5) Clean inside of windshield with ammonia based glass cleaner and lint-free cloth.

(6) Install molding to perimeter of windshield.

(7) Apply Glass Prep adhesion promoter 25 mm (1 in.) wide around perimeter of windshield and wipe with clean/dry lint-free cloth until no streaks are visible.

(8) Apply Glass Primer 25 mm (1 in.) wide around perimeter of windshield. Allow at least three minutes drying time.

(9) Using a razor knife, remove as much original urethane as possible. Do not damage paint on windshield fence.

(10) Apply pinch weld primer 19 mm (0.75 in.) wide around the windshield fence. Allow at least three minutes drying time.

(11) If a low viscosity urethane adhesive is used, install compression spacers on the fence around the windshield opening (Fig. 3).

(12) Apply a 10 mm (0.4 in.) bead of urethane on center line of windshield fence.

(13) With the aid of a helper, position the windshield over the windshield opening.

(14) Slowly lower windshield glass to windshield opening fence. Guide the molding into proper position as necessary. Push windshield inward until molding is flush to roof line and A-pillars (Fig. 3).

(15) Clean access urethane from exterior with Mopar® Super Kleen or equivalent.

WINDSHIELD (Continued)

(16) Apply 150 mm (6 in.) lengths of 50 mm (2 in.) masking tape spaced 250 mm (10 in.) apart to hold molding in place until urethane cures.
(17) Install A-pillar trim panels.
(18) Install cowl cover and wipers.
(19) Install inside rear view mirror.
(20) After urethane has cured, remove tape strips and water test windshield to verify repair.

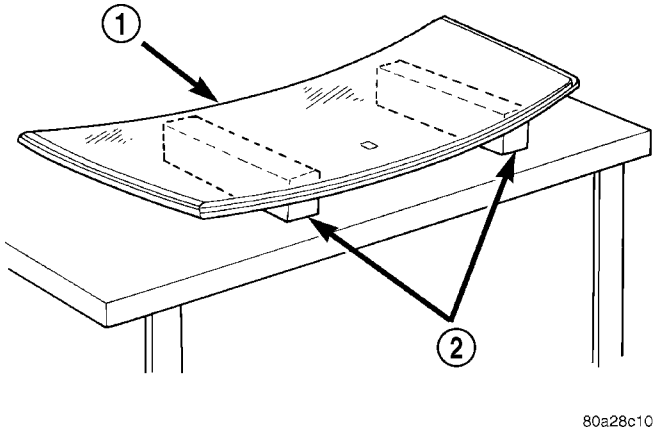

Fig. 2 WORK SURFACE SET UP AND MOLDING INSTALLATION

1 - WINDSHIELD AND MOLDINGS
2 - BLOCKS

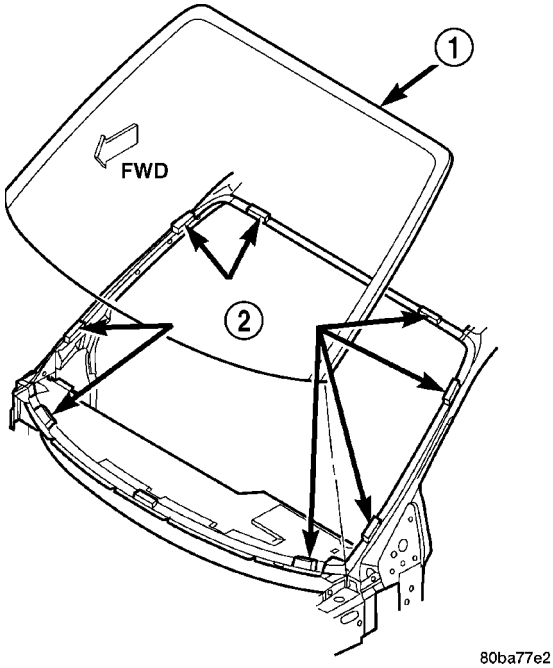

Fig. 3 LOWER WINDSHIELD INTO POSITION

1 - WINDSHIELD
2 - COMPRESSION SPACERS

SLIDING DOOR GLASS

REMOVAL

The temperature of the vehicle should be at least 21° C (70° F) before removing the stationary quarter/ sliding door glass. Butyl sealer becomes more pliable at high temperatures.

(1) Remove interior trim as necessary to gain access attaching locations on back of glass.
(2) Remove nuts holding stationary glass to fence.
(3) Using razor knife, cut butyl sealer holding glass to fence from between the mounting studs (Fig. 4).
(4) Push glass from opening.

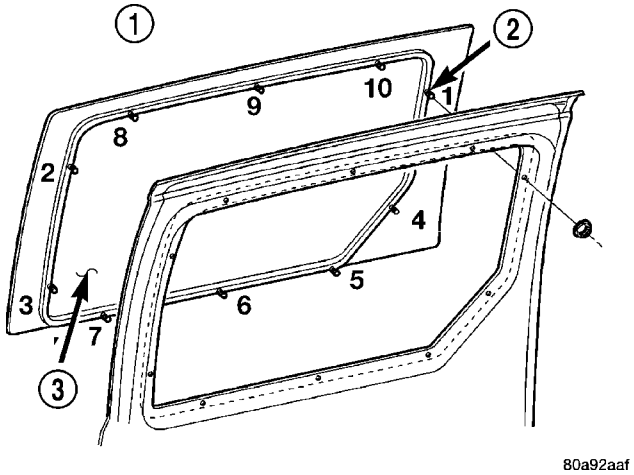

Fig. 4 SLIDING DOOR STATIONARY GLASS

1 - NUMBERS INDICATE THE TIGHTENING SEQUENCE
2 - 6 mm BEAD OF BUTYL TAPE
3 - BODY SIDE/SLIDING DOOR GLASS

INSTALLATION

The temperature of the vehicle should be at least 21° C (70° F) before removing the stationary quarter/ sliding door glass. Butyl sealer becomes more pliable at high temperatures.

The stationary glass fence should be cleaned of all old butyl sealer.

(1) Apply a 6 mm (0.25 in.) butyl tape around perimeter of glass assembly encapsulation track. Ensure that the butyl tape is wrapped around the mounting studs.
(2) Place the glass into the opening and insert mounting studs through holes in fence.
(3) Install nuts to hold stationary glass to fence.

CAUTION: Tighten nuts to 3.4 N·m (30 in. lbs.) torque in the sequence indicated. Do not over torque, or glass breakage may result (Fig. 4).

(4) Water test before installing interior trim.
(5) Install interior trim. (Refer to 23 - BODY/ DOORS - SLIDING/TRIM PANEL - INSTALLATION)
(6) Verify alignment and flushness.

QUARTER WINDOW

REMOVAL

(1) Remove C-pillar trim.
(2) Open quarter glass to vent position.
(3) Disengage quarter window retainer from vent motor arm.
(4) Remove nuts attaching quarter glass to C-pillar (Fig. 5).
(5) Use magnetic socket to prevent dropping into the pillar.
(6) Remove quarter glass from vehicle.

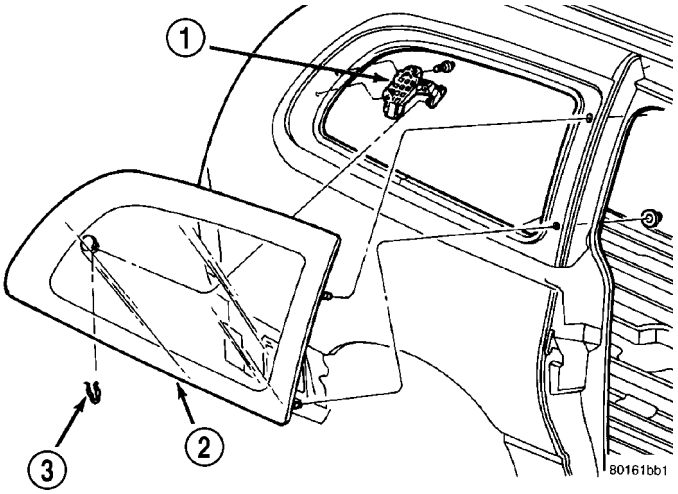

Fig. 5 QUARTER GLASS

1 - VENT CONTROL
2 - QUARTER GLASS
3 - CLIP

INSTALLATION

(1) Place quarter glass in position on vehicle.
(2) Install nuts attaching quarter glass to C-pillar.
(3) Engage quarter window retainer to vent motor arm.
(4) Install screw attaching quarter window retainer to vent motor arm.
(5) Close quarter glass.
(6) Verify alignment and flushness.
(7) Install C-pillar trim.

LIFTGATE GLASS

REMOVAL

Refer to the Safety Precautions in this section for description of tools and adhesive systems that are recommended for use in this procedure.

REAR WINDOW REMOVAL – EXTERIOR METHOD

(1) Remove rear window wiper arm.
(2) Remove interior trim covers.
(3) Disconnect wires for electrically heated window, if equipped.
(4) Using a sharp cold knife, cut urethane adhesive attaching the rear window to the liftgate. A power cutting device can be used if available (Fig. 1).
(5) Remove rear window from vehicle.

INSTALLATION

Refer to the Safety Precautions in this section for description of tools and adhesive systems that are recommended for use in this procedure.

CAUTION: Open the left front door glass before installing rear window to avoid pressurizing the passenger compartment. If a door is slammed before urethane bonding is cured, water leaks can result.
Allow the urethane at least 24 hours to cure before returning the vehicle to use.
To avoid stressing the replacement rear window, the urethane bonding material on the rear window fence should be smooth and consistent to the shape of the replacement glass.

(1) Place replacement glass into rear window opening.
(2) Verify the glass lays evenly against the pinch weld fence at the sides, top and bottom of the replacement rear window. If not, the urethane adhesive remaining on the fence must be formed to the shape of the new glass.
(3) Using a grease pencil, mark the glass and liftgate in several locations to aid installation.
(4) Remove replacement glass from liftgate opening.
(5) Position the rear window inside up on a suitable work surface with two padded, wood 10 cm by 10 cm by 50 cm (4 in. by 4 in. by 20 in.) blocks, placed parallel 75 cm (2.5 ft.) apart (Fig. 2).

WARNING: DO NOT USE SOLVENT BASED GLASS CLEANER TO CLEAN REAR WINDOW BEFORE APPLYING GLASS PREP AND PRIMER. POOR ADHESION CAN RESULT.

LIFTGATE GLASS (Continued)

(6) Clean inside of rear window with ammonia based glass cleaner and lint-free cloth.

(7) Apply Glass Prep adhesion promoter 25 mm (1 in.) wide around perimeter of rear window and wipe with clean/dry lint-free cloth until no streaks are visible.

(8) Apply Glass Primer 25 mm (1 in.) wide around perimeter of rear window. Allow at least three minutes drying time.

(9) Apply Pinch weld Primer 19 mm (0.75 in.) wide around the rear window fence. Allow at least three minutes drying time.

(10) If a low viscosity urethane adhesive is used, install compression spacers on the fence around the rear window opening.

(11) Apply a 10 mm (0.4 in.) bead of urethane along center line of rear window fence.

CAUTION: Be careful so that spacers do not contaminate urethane bead.

(12) Apply 2 glass spacer clips to bottom edge of glass, approximately 150 mm (6.0 inches) inboard from each corner.

(13) With the aid of a helper, position the rear window over the rear window opening and align the reference marks.

(14) Slowly lower glass to rear window opening fence. Ensure spacers on bottom edge of glass contact sheet metal ledge. Then, push glass inward until flush to liftgate surface.

(15) Clean excess urethane from exterior with Mopar® Super Kleen, or equivalent.

(16) Apply 150 mm (6 in.) lengths of 50 mm (2 in.) masking tape spaced 250 mm (10 in.) apart to hold molding in place until urethane cures.

(17) Install rear window wiper arm.

(18) Install interior trim.

(19) After urethane has cured, remove tape strips, slide out bottom spacer clips, and then water test rear window to verify repair.

WEATHERSTRIP/SEALS

TABLE OF CONTENTS

page

FRONT DOOR GLASS RUN WEATHERSTRIP
REMOVAL 166
INSTALLATION 166
FRONT DOOR OUTER BELT MOLDING
REMOVAL 167
INSTALLATION 167
FRONT DOOR WEATHERSTRIP
REMOVAL 168
INSTALLATION 168
SLIDING DOOR WEATHERSTRIP
REMOVAL 168
INSTALLATION 168
FRONT DOOR INNER BELT MOLDING
REMOVAL 168
INSTALLATION 168

FRONT DOOR GLASS RUN WEATHERSTRIP

REMOVAL

(1) Remove door frame closeout moldings.
(2) Pull weatherstrip from glass run channel at rear of door frame, working from the bottom to the top.
(3) Disengage clip attaching weatherstrip to door frame.
(4) Pull weatherstrip from lip along top of door frame (Fig. 1).
(5) Remove door trim panel.
(6) Remove door speaker, if equipped.
(7) Remove watershed as necessary to gain access to screw attaching front lower corner of glass run weatherstrip to inner door panel.
(8) Remove screw attaching glass run weatherstrip to inner door panel.
(9) Remove inner belt weatherstrip.
(10) Pull weatherstrip from front glass run channel.
(11) Remove glass run weatherstrip from vehicle.

INSTALLATION

(1) Position glass run weatherstrip on vehicle (Fig. 1).
(2) Insert A-pillar section of the glass run into door through belt line and lower to bottom of door using molded corners as a guide.

NOTE: Care must be taken not to damage the medal bracket when installing through the belt opening.

(3) Locate the top corner portion of the B-pillar glass run section onto the roll frame and slide it up until the part bottoms out on the header portion of the roll frame.

NOTE: Do not JAM the corner into place.

(4) Install the entire B-pillar glass run onto roll frame.
(5) Working from the B-pillar forward install the first eight to twelve inches of the header glass run onto the roll frame.

NOTE: Use care not to push or pull the header section and the molded corner out of location.

FRONT DOOR GLASS RUN WEATHERSTRIP (Continued)

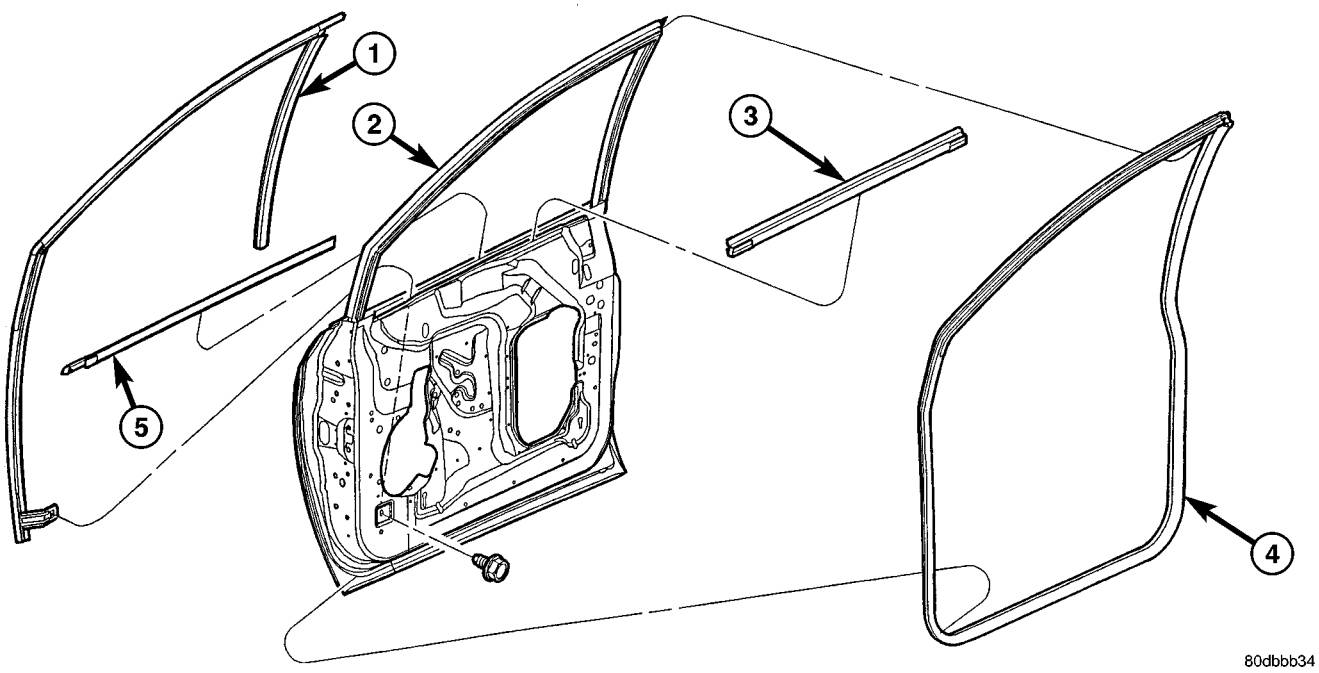

Fig. 1 FRONT DOOR WEATHERSTRIP

1 - DOOR GLASS RUN WEATHERSTRIP
2 - FRONT INNER DOOR
3 - DOOR BELT OUTER WEATHERSTRIP
4 - DOOR MOUNTED WEATHERSTRIP
5 - DOOR OUTER BELT WEATHERSTRIP

(6) Install fully the entire A-pillar glass run section by indexing the molded corner detail into the roll frame. Slide the glass run up the A-pillar until the rubber molded joint just touches the roll frame.

(7) Verify that the tertiary seal is on the correct side of the roll frame prior to seating the glass run fully onto the frame. Verify the glass runs is fully seated for the header, and A-pillar and B-pillar

(8) Install screw attaching glass run weatherstrip to inner door panel.

(9) Install inner belt weatherstrip.

(10) Install watershed.

(11) Push weatherstrip groove onto lip along top of door frame.

(12) Engage clip into slot in door frame.

(13) Push weatherstrip into channel at rear of door frame, working from the top to bottom.

(14) Install door frame closeout moldings.

(15) Install door speaker, if equipped.

(16) Install door trim panel.

FRONT DOOR OUTER BELT MOLDING

REMOVAL

(1) Remove the side view mirror. (Refer to 23 - BODY/EXTERIOR/SIDE VIEW MIRROR - REMOVAL)

(2) Remove door trim panel.

(3) Roll door glass down.

(4) Using a hook tool, disengage interlocking lip at the base of the inward edge of the belt molding (Fig. 1).

(5) Remove belt molding from door.

INSTALLATION

(1) Place belt molding in position on door (Fig. 1).

NOTE: Make sure end of applique is against outer belt.

(2) Engage interlocking lip at the base of the inward edge of the belt molding on door panel.

(3) Install door trim panel.

FRONT DOOR WEATHERSTRIP

REMOVAL

(1) Open front door.
(2) Using fork tool (C-4829), remove push pin fasteners attaching front door weatherstrip to end frames and bottom of door (Fig. 2).
(3) Pull weatherstrip from retaining channel around window frame.
(4) Remove weatherstrip from vehicle.

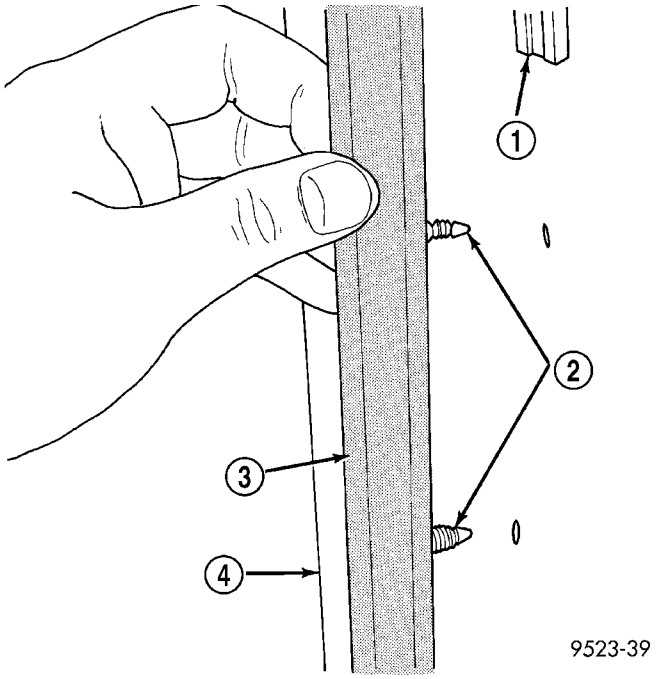

Fig. 2 Front Door Weatherstrip

1 - RETAINING CHANNEL
2 - PUSH-IN FASTENER
3 - WEATHERSTRIP
4 - FRONT DOOR

INSTALLATION

(1) Position weatherstrip on door.
(2) Install push pin fasteners attaching front door weatherstrip to end frames and bottom of door (Fig. 2).
(3) Install weatherstrip into retaining channel around window frame.
(4) Close front door.

SLIDING DOOR WEATHERSTRIP

REMOVAL

(1) Open sliding door.
(2) Remove door opening sill plate.
(3) Loosen B-pillar trim covers.
(4) Loosen quarter panel trim panels.
(5) From splice at the bottom center of door opening, pull weatherstrip from pinch flange around door opening.

INSTALLATION

(1) Place splice at the bottom center of door opening, pushing weatherstrip onto pinch flange around door opening.
(2) Tighten quarter panel trim panels.
(3) Tighten B-pillar trim covers.
(4) Install door opening sill plate.
(5) Close sliding and check alignment.

FRONT DOOR INNER BELT MOLDING

REMOVAL

(1) Remove door trim panel.
(2) Peel upper corner seals away form inner belt molding to clear removal path.
(3) Pull inner belt molding upward to disengage retaining channel in bottom of molding from door panel flange (Fig. 1).
(4) Remove inner belt molding from vehicle.

INSTALLATION

(1) Place inner belt molding in position on door (Fig. 1).
(2) Push inner belt molding downward to engage retaining channel onto door panel flange.
(3) Install upper corner seals in proper location.
(4) Install door trim panel.

SUNROOF

TABLE OF CONTENTS

	page
SUNROOF	
DESCRIPTION	169
DIAGNOSIS AND TESTING	
SUNROOF DIAGNOSIS AND TESTING	169
DRAIN TUBE	
REMOVAL	172
INSTALLATION	172
GLASS PANEL	
REMOVAL	173
INSTALLATION	173
ADJUSTMENTS	
SUNROOF GLASS PANEL ADJUSTMENT	173
SUNROOF ASSEMBLY	
REMOVAL	173
INSTALLATION	173
SUNSHADE	
REMOVAL	173
INSTALLATION	173
WIND DEFLECTOR	
REMOVAL	174
INSTALLATION	174
WATER CHANNEL	
REMOVAL	174
INSTALLATION	174
SUNROOF MOTOR	
REMOVAL	174
INSTALLATION	174
ADJUSTMENTS	
ADJUSTMENT	175
SUNROOF SWITCH	
REMOVAL	176
INSTALLATION	176

SUNROOF

DESCRIPTION

WARNING: Keep fingers and other body parts out of sunroof opening at all times.

The sun roof features consists of: (Fig. 1)
- Sun roof glass
- Sun roof sun shade

The sunroof power sliding glass panel and sunshade can be positioned anywhere along its travel, rearward of glass panel front edge.

The sunroof is electrically operated from a switch located in the overhead console. To operate the sunroof the ignition switch must be in the Accessory or On/Run position. Both switchs are a rocker style design that open or close the sunroof. When pressing and releasing the open button once, the sunroof will express open to the comfort stop and the wind deflector will raise. If the button is pressed a second time, the sunroof will continue to open to full travel unless the button is released, at which time it will stop in that position. Pressing and holding the close button will close the sunroof. If the close button is released before the glass fully closes, the sunroof will stop in that position. The vent switch operates in a similar manor. The sunroof will also operate for up to fifteen minutes after the ignition key is turned off for customer comfort and convenance while parking.

DIAGNOSIS AND TESTING

SUNROOF DIAGNOSIS AND TESTING

Refer to Sunroof Diagnostic Chart for possible causes. Before beginning sunroof diagnostics verify that all other power accessories are in proper operating condition. If not, a common electrical problem may exist. Refer to Wiring Diagrams, in this publication for circuit, splice and component descriptions. Check the condition of the circuit protection (20 amp circuit breaker in the Junction Block). Inspect all wiring connector pins for proper engagement and continuity. Check for battery voltage at the power sunroof controller, refer to Wiring Diagrams, for circuit information. If battery voltage of more than 10 volts is detected at the controller, proceed with the following tests (the controller will not operate at less than 10 volts).

Before beginning diagnosis for wind noise or water leaks, verify that the problem was not caused by releasing the control switch before the sunroof was fully closed. The sunroof module has a water-management system. If however, the sunroof glass is in a partial closed position, high pressure water may be forced beyond the water management system boundaries and onto the headlining.

SUNROOF (Continued)

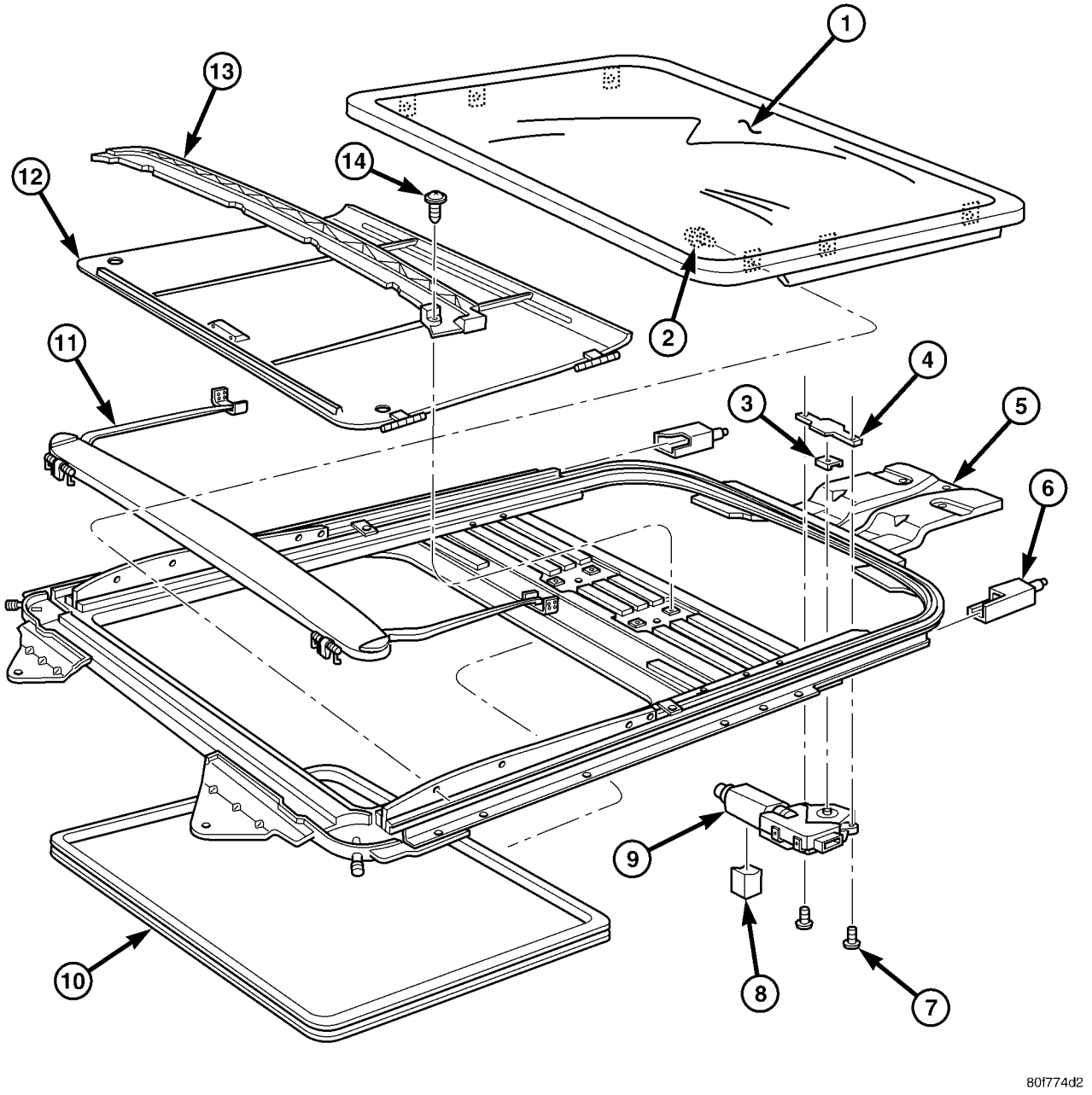

Fig. 1 SUNROOF ASSEMBLY

1 - Glass Assembly
2 - Screw(s)
3 - Motor Clip
4 - Motor Cover
5 - U-Frame Assembly
6 - Rear Drain Covers
7 - Screw(s)
8 - Insulator
9 - Motor
10 - Lace
11 - Wind Deflector
12 - Sun Shade
13 - Water Channel
14 - Screw(s)

SUNROOF (Continued)

SUNROOF DIAGNOSIS CHART

SYMPTOM	POSSIBLE CAUSE
Sunroof motor inoperative.	Faulty control switch. Faulty circuit ground between sunroof module, control switch, and body harness. Faulty power circuit between sunroof module, control switch, and body harness. Faulty sunroof drive motor. Faulty sunroof module.
Audible whine when switch is depressed, sunroof does not operate.	Faulty sunroof drive motor. Binding cable.
Audible clicking or ratcheting when switch is pressed, sunroof does not operate.	Broken or worn drive cable. Worn drive motor gear. Mechanisms not synchronized.
Sunroof vents and opens, but does not close.	Broken or disengaged trough guide Binding cable. Faulty circuit. Faulty control switch. Faulty sunroof module. Faulty drive motor.
Sunroof vents, but does not open.	Binding cable or mechanism. Faulty circuit. Faulty switch. Faulty sunroof module.
Sunroof does not vent	Binding cable or mechanism. Faulty circuit. Faulty control switch. Faulty sunroof module.
Sunroof water leak.	Drain tubes clogged or kinked or disconnected from the sunroof. Glass panel improperly adjusted. Faulty glass panel seal.
Gurgling sound from sunroof	Low spot in drain hose routing, allowing water to stand.
Wind noise from sunroof.	Glass panel compression to the roof opening not consistant. Glass not installed or adjusted properly. Faulty glass panel seal.
Buzz, Squeak,Rattles from sunroof	Loose or broken attaching hardware. No lubracation in track. Worn or broken mechanism. Cables bunched or kinked

SUNROOF (Continued)

SYMPTOM	POSSIBLE CAUSE
Sunshade will not function or does not operate smoothly	Sunshade feet are missing, broken or loose. No lubracation in track. Track obstructions or interference.
Glass movement not consistant or glass does not operate smoothly	Glass and Track timing. Glass and Track alignment Cables and Guide alignment

WATER DRAINAGE AND WIND NOISE DIAGNOSIS

The sliding glass panel is designed to seal water entry with a snug fit between the roof and the seal. The fit can be checked by inserting a piece of paper between the roof and the seal. The piece of paper should have some resistance when pulled out when the glass panel is in the closed position. Excessive wind noise could result if the gap clearances are exceeded. The sunroof glass panel may need to be adjusted. Refer to Sunroof Glass Panel Adjustment for proper procedures.

Adequate drainage is provided by a drain trough in the sunroof housing which encircles the sliding glass panel and leads to drain hoses. If a wet headliner or other water leak complaints are encountered, before performing any adjustments, first ensure that the drainage system is not plugged or disconnected. Use a pint container to pour water into the sunroof housing drain trough. If water flow is restricted in any of the four drain holes, use compressed air to blow out any material plugging the drain system. Retest system again.

To further check for a disconnected drain hose:

(1) Remove A-pillar trim, sun visors, and map lamps/mini console.

(2) Remove sunroof opening trim lace. Refer to Sunroof Opening Trim Lace.

NOTE: Care must be taken not to fold or kink the headliner upon removal.

(3) Lower headliner as necessary to gain access to sunroof housing drain tubes. Refer to Headlining Removal and Installation for proper procedures.

(4) Repair as necessary.

DRAIN TUBE

REMOVAL

FRONT HOSES

NOTE: Front A-pillars are filled with sound deadening foam and the front drain tubes are sealed into the pillars.

(1) Move glass panel to the fully closed position.

(2) Disconnect negative battery cable.

(3) Remove headliner (Refer to 23 - BODY/INTERIOR/HEADLINER - REMOVAL).

(4) Disconnect the drain hose from the sunroof housing (Fig. 1).

(5) Drain any liquid from hose connection, repair as necessary.

REAR HOUSING HOSE

(1) Move glass panel to the fully closed position.

(2) Disconnect negative battery cable.

(3) Remove headliner (Refer to 23 - BODY/INTERIOR/HEADLINER - REMOVAL).

(4) Remove third seat or seats from vehicle.

(5) Remove second seat belt lower anchor.

(6) Remove third seat lower anchor.

(7) Remove quarter trim bolster.

(8) Remove trim panel screws.

(9) Remove quarter trim panel

(10) Disconnect the drain hose from the sunroof housing. (Fig. 1).

(11) Drain any liquid from hose connection, if necessary, and remove tube.

INSTALLATION

FRONT HOSES

(1) Connect the new drain hose to the sunroof housing and test drainage (Fig. 1).

(2) Install headliner (Refer to 23 - BODY/INTERIOR/HEADLINER - INSTALLATION).

(3) Install sunroof opening trim lace.

(4) Connect the control switch wire connector and install control switch.

DRAIN TUBE (Continued)

(5) Verify sunroof operation and alignment.

REAR HOUSING HOSE

(1) Connect the new drain hose to the sunroof housing and test drainage (Fig. 1).
(2) Install headliner(Refer to 23 - BODY/INTERIOR/HEADLINER - INSTALLATION).
(3) Install sunroof opening trim lace.
(4) Connect the control switch wire connector and install control switch.
(5) Verify sunroof operation and alignment.

GLASS PANEL

REMOVAL

(1) Move the glass panel to the vent position.
(2) Slide sunshade rearward to the open position.
(3) Remove the glass panel screws (Fig. 1).
(4) Lift off glass panel and remove from vehicle.

INSTALLATION

(1) Position glass panel on to mechanism lift arms.
(2) Start the attaching screws, and hand tighten (Fig. 1).
(3) Adjust sunroof glass to fit flush with roof line(Refer to 23 - BODY/SUNROOF/GLASS PANEL - ADJUSTMENTS).
(4) Verify sunroof operation and alignment.

ADJUSTMENTS

SUNROOF GLASS PANEL ADJUSTMENT

(1) Move the sunshade rearward to the open position.
(2) Move the sunroof glass panel to the fully closed position.
(3) Loosen the forward attaching screws on each side enough to make the front of the glass to adjust up or down.
(4) Adjust the front surface of the sunroof glass panel 0.00 mm to 1.75 mm (0.00 in. to 0.07 in.) below the top surface of the roof.
(5) Tighten the front glass panel attaching screws to 3.5 N·m (31 in. lbs.) torque (Fig. 1).
(6) Loosen the rear screws on each side enough to make the rear adjustment (Fig. 1).
(7) Adjust the rear surface of the sunroof glass panel 0.00 mm to 1.75 mm (0.03 in. to 0.07 in.) above the top surface of the roof.
(8) Tighten the rear glass panel attaching screws to 3.5 N·m (31 in. lbs.) torque (Fig. 1).
(9) Check for proper fit. If not OK, repeat glass panel adjustment.

SUNROOF ASSEMBLY

REMOVAL

(1) Move glass panel to the fully closed position.
(2) Disconnect battery negative cable.
(3) Remove headliner (Refer to 23 - BODY/INTERIOR/HEADLINER - REMOVAL).
(4) Disconnect the four drain tubes from sunroof housing (Fig. 1).
(5) Loosen fasteners attaching sunroof assembly (Fig. 1).
(6) With the aid of a helper, support the sunroof and remove the fasteners attaching sunroof assembly to roof panel (Fig. 1).
(7) Remove sunroof from vehicle.

INSTALLATION

(1) Raise sunroof module assembly and guide it carefully into position.
(2) While supporting the sunroof assembly tighten the attaching screws (Fig. 1). Tighten to 6 N·m (53 in. lbs.) torque.
(3) Connect the drain tubes to the sunroof (Fig. 1).
(4) Connect battery negative cable.
(5) Test sunroof operation, adjust as necessary(Refer to 23 - BODY/SUNROOF/GLASS PANEL - ADJUSTMENTS).
(6) Install headliner (Refer to 23 - BODY/INTERIOR/HEADLINER - INSTALLATION).
(7) Install sunroof opening trim lace position(Refer to 23 - BODY/SUNROOF/OPENING TRIM LACE - INSTALLATION).

SUNSHADE

REMOVAL

(1) Place the sunroof glass panel in the vent position.
(2) Remove glass panel (Refer to 23 - BODY/SUNROOF/GLASS PANEL - REMOVAL).
(3) Remove water channel (Fig. 1).
(4) Cycle sunroof motor to the open position.
(5) Move sunshade towards the closed position stopping three to four inches from the closed position.
(6) Depress the spring feet clips on one side of the sun shade.
(7) Remove sunshade.

INSTALLATION

(1) Place one side of the sunshade spring feet clips into the top track U-frame.
(2) Depress the both releasing clips on the other side to allow them to go into the top track U-frame.
(3) Move sunshade to the open position.
(4) Install water channel (Fig. 1).

SUNSHADE (Continued)

(5) Verify that the sunshade move back and forth properly.
(6) Cycle sunroof towards the closed position.
(7) Install glass panel (Refer to 23 - BODY/SUNROOF/GLASS PANEL - INSTALLATION).

WIND DEFLECTOR

REMOVAL

(1) Fully open sunroof glass panel.
(2) Disconnect negative battery cable.
(3) Remove sunroof assembly (Refer to 23 - BODY/SUNROOF/MODULE ASSEMBLY - REMOVAL).
(4) Depress the front deflector retaining tabs. (Fig. 2)

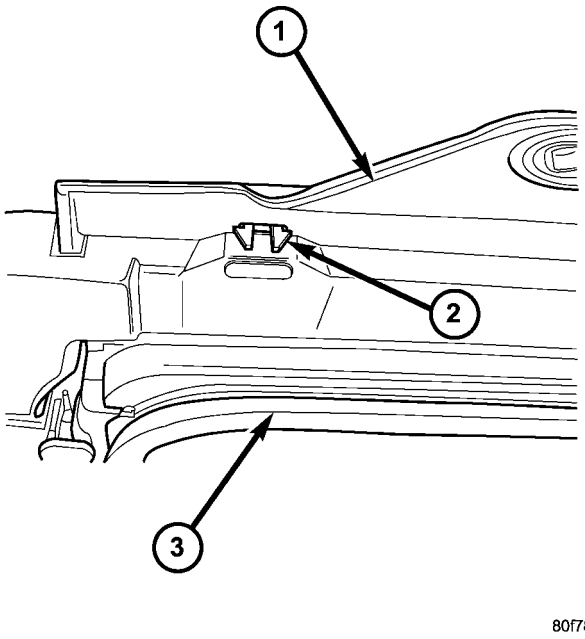

Fig. 2 WIND DEFLECTOR

1 - Sun Roof
2 - Retaing Clip
3 - Sun Roof Assembly Trim

(5) Remove wind deflector.

INSTALLATION

(1) Place wind deflector arms in upward position engage the wind deflector blade into the U-frame.
(2) Engage the retaining clips (Fig. 1).
(3) Verify wind deflector operation.
(4) Install the sun roof assembly (Refer to 23 - BODY/SUNROOF/MODULE ASSEMBLY - INSTALLATION).

WATER CHANNEL

REMOVAL

(1) Remove glass panel (Refer to 23 - BODY/SUNROOF/GLASS PANEL - REMOVAL).
(2) Remove the retaining screws (Fig. 1).
(3) Carefully slide water channel forward to release tabs from U-frame and remove from vehicle.

INSTALLATION

(1) Carefully place water channel onto U-frame and slide it rearward to lock tabs (Fig. 1).
(2) Install the water channel attaching screws (Fig. 1).
(3) Position glass panel on to mechanism lift arms.
(4) Start the glass attaching screws, and hand tighten.
(5) Adjust sunroof glass (Refer to 23 - BODY/SUNROOF/GLASS PANEL - ADJUSTMENTS).
(6) Verify sunroof operation and alignment.

SUNROOF MOTOR

REMOVAL

(1) Remove the sunroof (Refer to 23 - BODY/SUNROOF/MODULE ASSEMBLY - REMOVAL).
(2) Remove the sunroof motor retaining bolts and remove motor (Fig. 1).

INSTALLATION

CAUTION: THE SUNROOF MOTOR MUST BE TIMED WITH THE SUNROOF ASSEMBLY. FAILURE TO DO SO WILL RESULT IN IMPROPER SUNROOF OPERATION AND POSSIBLE LEAKAGE OR DAMAGE TO THE ASSEMBLY.

(1) Assure proper sunroof motor timing before installation (Refer to 23 - BODY/SUNROOF/DRIVE MOTOR - ADJUSTMENTS).
(2) Position the sunroof motor to the sunroof assembly and install the retaining bolts (Fig. 1). Tighten sunroof motor retaining bolts to 4.2Nm (40 lbs.in.).
(3) Connect the timed sunroof assembly to a power source and assure proper operation before installing the sunroof assembly into the vehicle.

SUNROOF MOTOR (Continued)

ADJUSTMENTS

ADJUSTMENT

CAUTION: THE IS NO ADJUSTMENT AVAILABLE FOR A NORMALLY OPERATING SUNROOF. THIS PROCEDURE IS USE TO SET SUNROOF MOTOR TO SUNROOF ASSEMBLY TIMING.

(1) Manually push the sunroof guide assembly to the full forward position until it is locked into position. This is verified by attempting to push the guide assembly rearward. (Fig. 3)

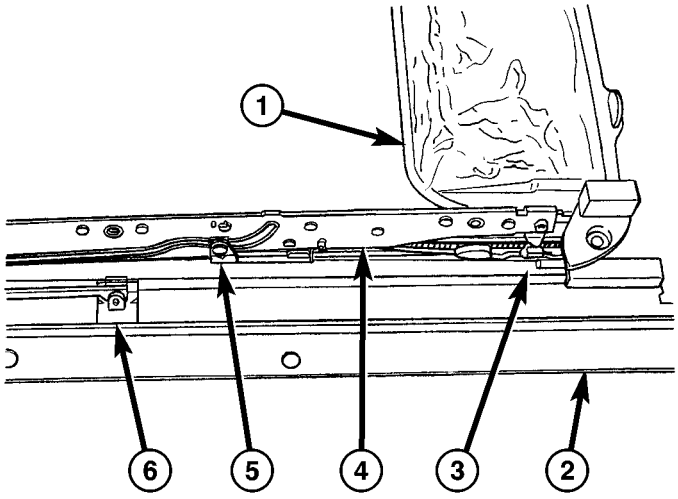

Fig. 3 SUNROOF GUIDE LOCK POSITION

1 - SUN SHADE
2 - U - FRAME
3 - U- FRAME SLOT
4 - GUIDE RAIL
5 - GUIDE RAIL PIVIOT
6 - WIND DEFLECTOR

NOTE: The guide rail will be raised above the U-frame assembly when in the lock position.

(2) Remove the sunroof glass (Refer to 23 - BODY/ SUNROOF/GLASS PANEL - REMOVAL).

(3) Manually move the guide piviot inside the guide rail cam slot until it is centered between the etched timing marks on both rails. (Fig. 4)

(4) Verify that the white marking is visible in the new motor window. If the mark is not visible, connect a power source to the motor and cycle the switch until the motor is in the closed position (white mark in window). (Fig. 5)

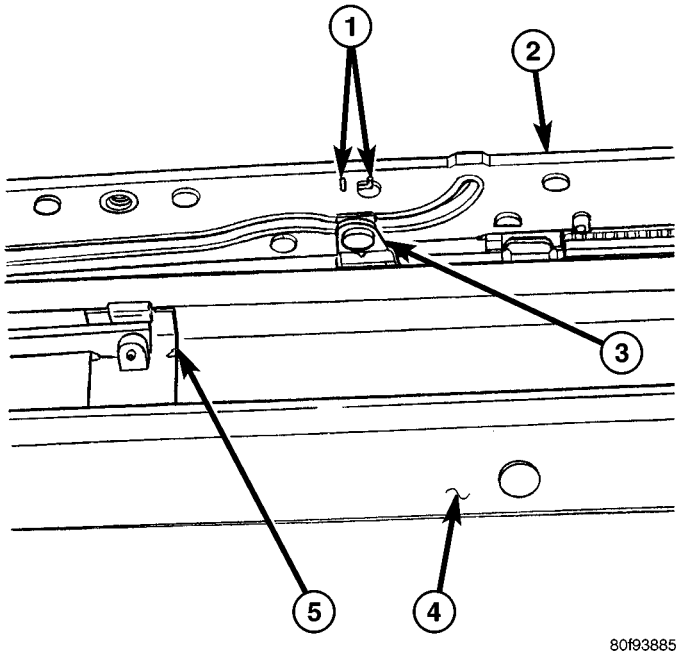

Fig. 4 SUNROOF GUIDE PIVOT

1 - TIMING MARKS
2 - GUIDE RAIL
3 - GUIDE RAIL PIVIOT
4 - U-FRAME
5 - WIND DEFLECTOR

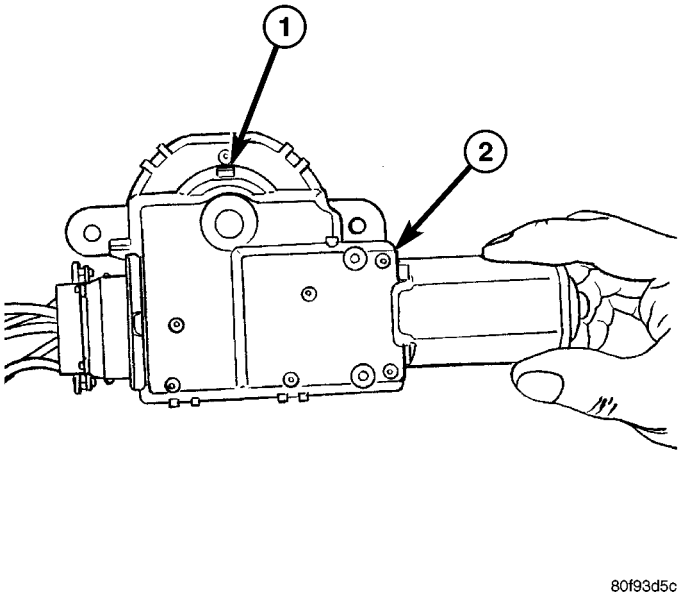

Fig. 5 SUNROOF MOTOR

1 - SUNROOF MOTOR TIMING WINDOW
2 - SUNROOF MOTOR

SUNROOF MOTOR (Continued)

(5) Install the sunroof motor and verify proper sunroof operation (Refer to 23 - BODY/SUNROOF/DRIVE MOTOR - INSTALLATION).

(6) Install the sunroof glass, leaving the retaining bolts loose.

(7) Install the sunroof assembly into the vehicle (Refer to 23 - BODY/SUNROOF/MODULE ASSEMBLY - INSTALLATION).

(8) Flush the sunroof glass into the vehicle roof opening and check sunroof glass alignment (Refer to 23 - BODY/SUNROOF/GLASS PANEL - ADJUSTMENTS).

SUNROOF SWITCH

REMOVAL

(1) Disconnect the negative battery cable.

(2) Separate the overhead console from the headliner, by carefully pulling down on the front portion, toward the windshield, to release the retaining clips (Fig. 6).

(3) Release the sunroof switch retaining tab, disconnect the electrical connector and remove the switch from the console (Fig. 6).

INSTALLATION

(1) Position the switch against the overhead console and push the switch to seat properly in retaining clip.

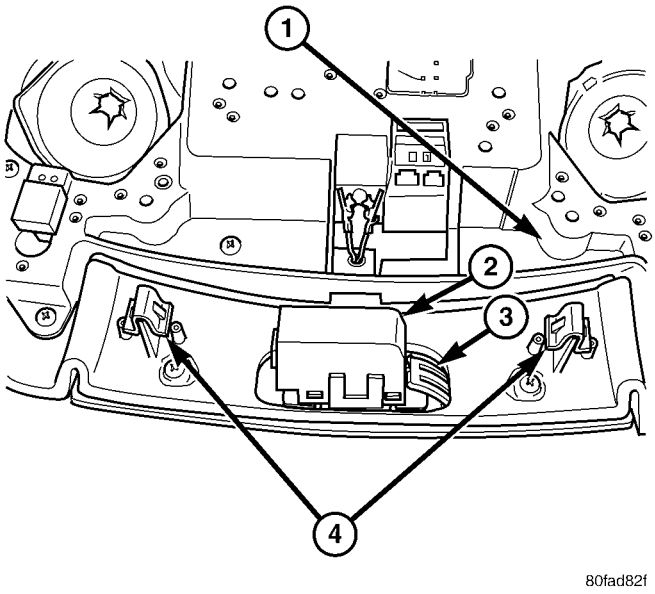

Fig. 6 OVERHEAD CONSOLE

1 - OVERHEAD CONSOLE
2 - POWER SUNROOF SWITCH
3 - SUNROOF SWITCH RETAINING CLIP (PART OF CONSOLE)
4 - OVERHEAD CONSOLE RETAINING CLIPS

(2) Install the overhead console.

(3) Connect the negative battery cable.

BODY STRUCTURE

TABLE OF CONTENTS

page

GAP AND FLUSH
SPECIFICATIONS - GAP AND FLUSH MEASUREMENTS 177
OPENING DIMENSIONS
SPECIFICATIONS - BODY OPENING DIMENSIONS 180
SEALER LOCATIONS
SPECIFICATIONS
SPECIFICATIONS - BODY SEALING LOCATIONS 183
SPECIFICATIONS - BODY SEALING LOCATIONS - FOLD-IN-FLOOR ONLY 209

page

STRUCTURAL ADHESIVE LOCATIONS
SPECIFICATIONS
SPECIFICATIONS - STRUCTURAL ADHESIVE LOCATIONS 218
SPECIFICATIONS - STRUCTURAL ADHESIVE LOCATIONS - FOLD-IN-FLOOR ONLY 228
WELD LOCATIONS
SPECIFICATIONS
SPECIFICATIONS - WELD LOCATIONS 234
SPECIFICATIONS - WELD LOCATIONS - FOLD-IN-FLOOR 350

GAP AND FLUSH

SPECIFICATIONS - GAP AND FLUSH MEASUREMENTS

INDEX

DESCRIPTION	FIGURE
GAP & FLUSH MEASUREMENTS	1

GAP AND FLUSH (Continued)

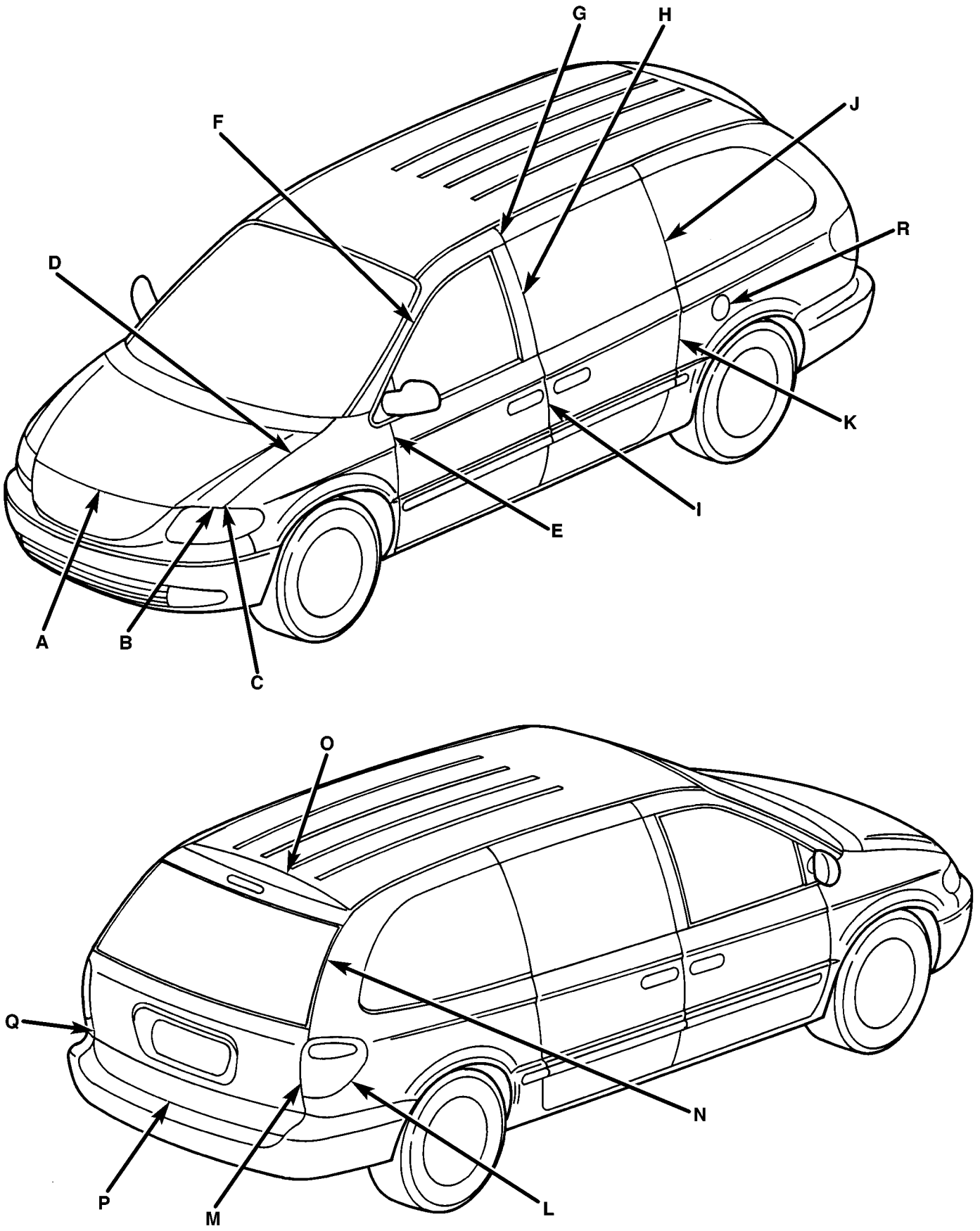

Fig. 1 GAP & FLUSH MEASUREMENTS

GAP AND FLUSH (Continued)

SPECIFICATIONS

ITEM	LOCATION	GAP	FLUSH
A	HOOD TO FASCIA	(VOYAGER ONLY) 8.0 ± 2.0 PARALLEL WITHIN 2.0 RIGHT TO LEFT	2.5 OVER FLUSH TO HOOD ± 1.5 CONSISTENT WITHIN 2.0
B	HEADLAMP MODULE TO HOOD	8.0 ± 2.0 PARALLEL WITHIN 2.0 RIGHT TO LEFT	
C	HOOD TO FENDER (FORE & AFT)	0.0 ± 1.5 LEFT TO RIGHT WITHIN 1.5	
D	HOOD TO FENDER	4.0 ± 1.5 PARALLEL WITHIN 2.5 AND WITHIN 1.5 LEFT TO RIGHT	UNDER FLUSH ± 2.0
E	FENDER TO DOOR	5.0 ± 1.5 PARALLEL WITHIN 2.0	UNDER FLUSH 0.5 ± 1.5 CONSISTENT WITHIN 2.0
F	FRONT DOOR TO ″A″ PILLAR COVER		UNDER FLUSH 0.5 ± 2.0
G	″A″ PILLAR COVER TO SLIDING DOOR	5.0 ± 2.0 PARALLEL WITHIN 1.0	1.0 UNDER FLUSH ± 2.0 CONSISTENT WITHIN 1.0
H	FRONT DOOR APPLIQUE TO SLIDING DOOR GLASS	5.0 ± 2.0 PARALLEL WITHIN 2.0	1.0 OVER FLUSH ± 2.0 CONSISTENT WITHIN 3.0
I	FRONT DOOR TO SLIDING DOOR	5.0 ± 2.0 PARALLEL WITHIN 2.0	± 2.0 CONSISTENT WITHIN 2.0
J	SLIDING DOOR TO REAR APERTURE GLASS	5.0 ± 2.0 PARALLEL WITHIN 1.5	± 3.0 CONSISTENT WITHIN 3.0
K	SLIDING DOOR TO REAR APERTURE	5.0 ± 1.5 PARALLEL WITHIN 2.0	± 1.5 CONSISTENT WITHIN 1.5
L	TAIL LAMP TO BODY SIDE APERTURE	1.0 ± 1.0 PARALLEL WITHIN 1.5	OVER FLUSH
M	TAIL LAMP TO LIFTGATE	4.0 ± 2.0	OVER FLUSH
N	LIFTGATE TO BODY SIDE APERTURE	4.0 ± 1.5	UNDER FLUSH 1.0 ± 2.5 CONSISTENT WITHIN 2.0
O	LIFTGATE TO ROOF	8.0 ± 2.0	UNDER FLUSH ± 1.5
P	LIFTGATE TO FASCIA	8.0 ± 2.5 PARALLEL WITHIN 3.0	OVER FLUSH
Q	LIFTGATE TO REAR FASCIA	2.0 ± 0.5	UNDER FLUSH TO 1.0 MAXIMUM
R	FUEL FILLER DOOR TO BODY SIDE APERTURE		UNDER FLUSH 0.5 ± 1.0

NOTE: All measurements are in mm.

OPENING DIMENSIONS

SPECIFICATIONS - BODY OPENING DIMENSIONS

INDEX

DESCRIPTION	FIGURE
WINDSHIELD OPENING	2
LIFTGATE OPENING	3
BODY SIDE OPENINGS	4

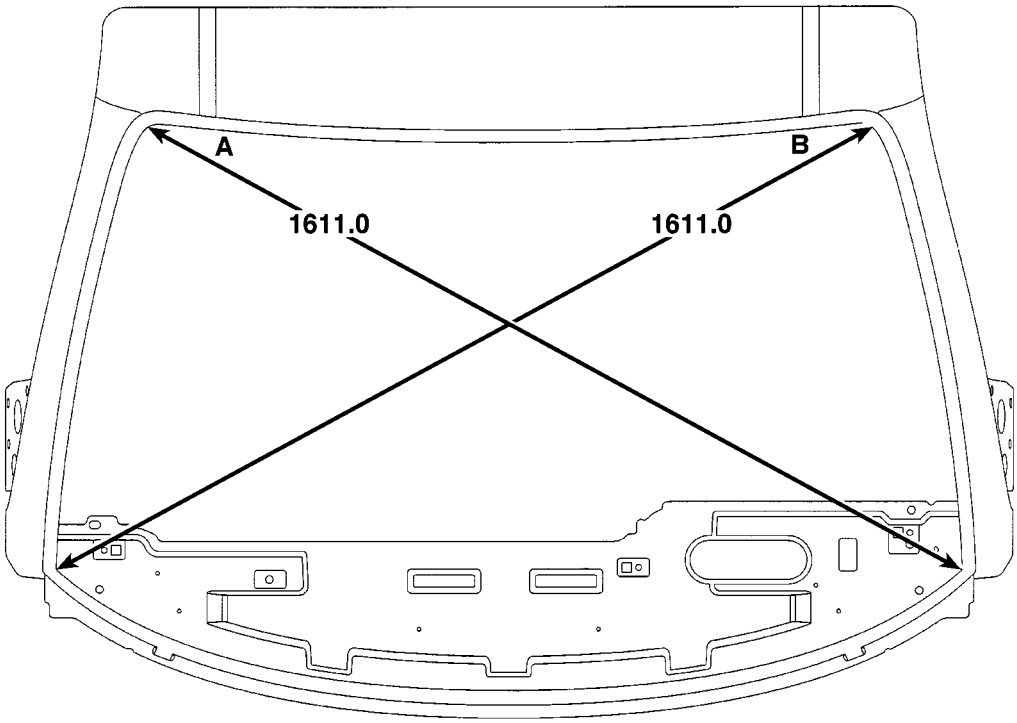

A-B CENTER OF RADIUS TO CENTER OF RADIUS, EDGE OF PINCH WELD TO LOWER WINDSHIELD CORNER

ALL DIMENSIONS IN mm

80c62397

Fig. 2 WINDSHIELD OPENING

OPENING DIMENSIONS (Continued)

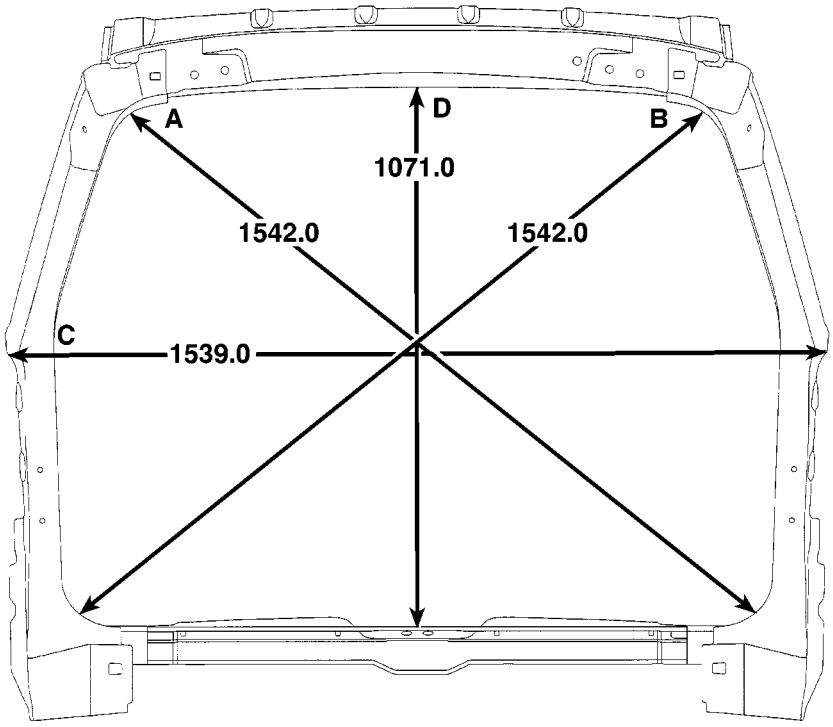

A-B CENTER OF RADIUS TO CENTER OF RADIUS
C TIP OF QUARTER PANEL TO TIP OF QUARTER PANEL
D UPPER PINCH WELD TO LEFT SIDE STRIKER BOLT
ALL DIMENSIONS IN mm

80c62398

Fig. 3 LIFTGATE OPENING

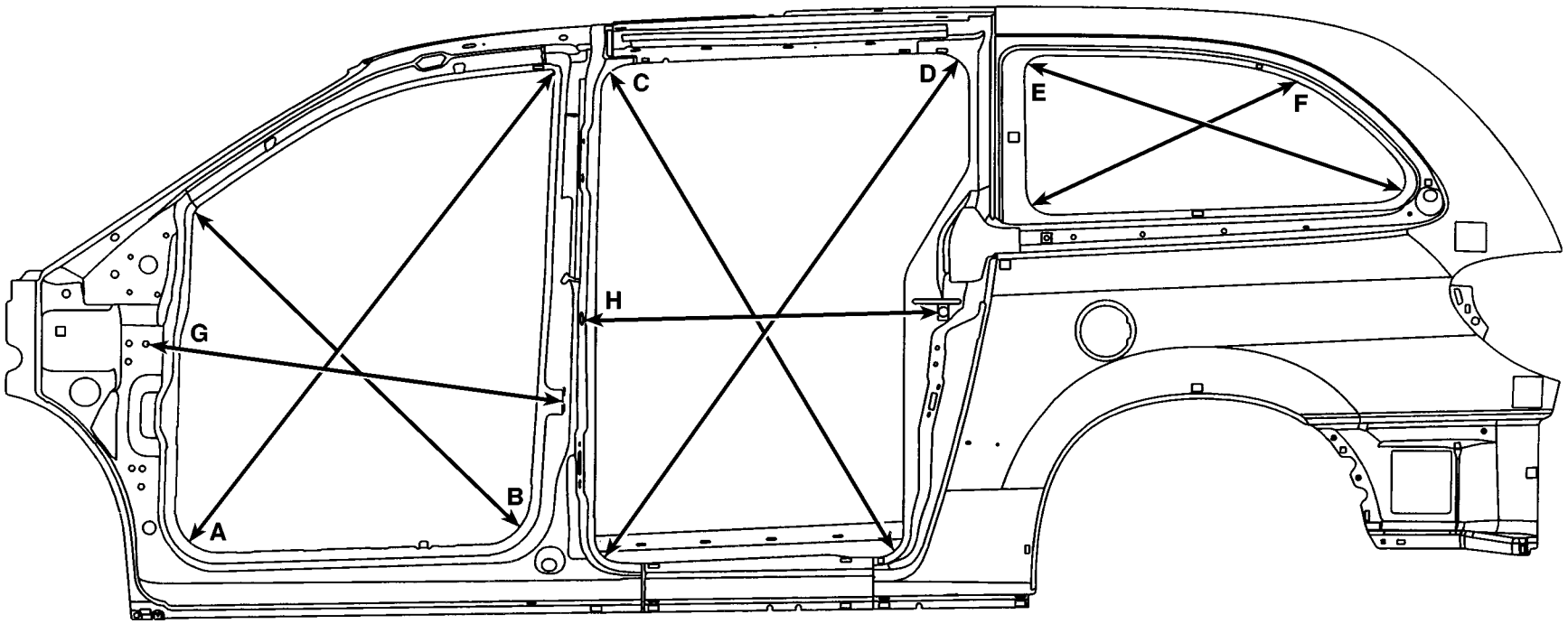

BODY SIDE OPENINGS

A-B-C-D-E-F CENTER OF RADIUS TO CENTER OF RADIUS AT EDGE OF PINCH WELD.

G INNER UPPER HINGE BOLT CENTER TO UPPER EDGE OF UPPER STRIKER BOLT.

H CENTER OF LARGE LATCH HOLE TO QUARTER PANEL PLP.
NOTE: LEFT SIDE IS HIGHER THAN RIGHT.

A – 1457.02
B – 1109.20
C – 1405.30 RIGHT – 1369.20 LEFT
D – 1499.50
E – 970.50 LONG WHEELBASE – 727.40 SHORT WHEELBASE
F – 716.70 LONG WHEELBASE – 500.70 SHORT WHEELBASE
G – 1021.40
H – 849.30

ALL DIMENSIONS IN mm

80c62399

Fig. 4 BODY SIDE OPENINGS

SEALER LOCATIONS

SPECIFICATIONS

SPECIFICATIONS - BODY SEALING LOCATIONS

INDEX

DESCRIPTION	FIGURE
METHODS OF APPLYING AUTO BODY SEALANT	5
LOWER WINDSHIELD OPENING - RIGHT AND LEFT SIDES	6
COWL SIDE - LEFT AND RIGHT SIDES	7
SIDE QUARTER WINDSHIELD OPENING - LEFT AND RIGHT SIDES	8
UPPER WINDSHIELD A-PILLAR - LEFT AND RIGHT SIDES	9
ROOF TRACK C-PILLAR - LEFT AND RIGHT SIDES	10
SLIDING DOOR UPPER FLANGE SEAMS - LEFT AND RIGHT SIDES	11
QUARTER PANEL EXTERIOR AREA - LEFT AND RIGHT SIDES	12
LOWER REAR EXTERIOR CORNER PANELS - LEFT AND RIGHT SIDES	13
LOWER SILL LIFT GATE OPENING - LEFT AND RIGHT SIDES	14
C-PILLAR CAN - LEFT AND RIGHT SIDES	15
SHOCK TOWER AREA - LEFT AND RIGHT SIDES	16
OUTER SHOCK TOWER AREA - LEFT AND RIGHT SIDES	17
CROSS MEMBER SUPPORT - LEFT AND RIGHT SIDES	18
A & B-PILLAR FLOOR PAN RISERS - LEFT AND RIGHT SIDES	19
REAR WHEEL HOUSE FLOOR PAN - LEFT AND RIGHT SIDES	20
REAR WHEELHOUSE TO FLOOR PAN - LEFT AND RIGHT SIDES	21
UPPER SLIDING DOOR FLANGE - LEFT AND RIGHT SIDES	22
UPPER LIFTGATE HINGE AREA - LEFT AND RIGHT SIDES	23
REAR BRACKET SUPPORT REAR HANGER - LEFT AND RIGHT SIDES	24
LIFTGATE PANEL OPENING - UNDERSIDE	25
D-PILLAR INSIDE SEAM - LEFT AND RIGHT SIDES	26
REAR TAIL LAMP AREA SEAMS - LEFT AND RIGHT SIDES	27
UPPER LIFTGATE PANEL SILL - LEFT AND RIGHT SIDES	28
FRONT WHEELHOUSE & SHOCK TOWER - LEFT AND RIGHT SIDES	29
REAR QUARTER WHEELHOUSE LIP & SEAT ANCHOR BOLT - LEFT AND RIGHT SIDES	30
TAIL LAMP CAN - LEFT AND RIGHT SIDES	31
B-PILLAR AND SILL AREAS - LEFT AND RIGHT SIDES	32
FRONT FLOOR PAN & RISER	33
FLOOR PAN SEAMS - LEFT AND RIGHT SIDES	34
FLOOR PAN & REAR WHEELHOUSE AREA - LEFT AND RIGHT SIDES	35
FLOOR PAN SILL & D-PILLAR SEAMS - LEFT AND RIGHT SIDES	36
LEFT SIDE SEAT ANCHOR REINFORCEMENT - SHORT WHEEL BASE ONLY	37
UNDERBODY - LEFT AND RIGHT SIDES	38

SEALER LOCATIONS (Continued)

DESCRIPTION	FIGURE
ROOF TOP JOINT & UPPER FRONT SLIDING DOOR - LEFT AND RIGHT SIDES	39
ROOF TOP JOINT & UPPER REAR SLIDING DOOR - LEFT AND RIGHT SIDES	40
ROOF TOP JOINT & WINDSHIELD OPENING - LEFT AND RIGHT SIDES	41
LIFT GATE ROOF COACH JOINT - LEFT AND RIGHT SIDES	42
ROOF RAP JOINT - LEFT AND RIGHT SIDES	43
DRAIN HOLE PATCHES	44
WHEELHOUSE VENT HOLE - LEFT SIDE SHOWN - RIGHT SIDE TYPICAL	45
FLOOR PAN HOLES - LEFT AND RIDE SIDES	46
HOOD FRONT HEM FLANGE & SIDES	47
FRONT DOOR LOWER FLANGE	48
LIFTGATE HEM FLANGE AND LATCH COVER SEAMS	49
FRONT DOOR BELT DOOR BELT SEAMS (FRONT)	50
FRONT DOOR BELT DOOR BELT SEAMS (REAR)	51

SEALER LOCATIONS (Continued)

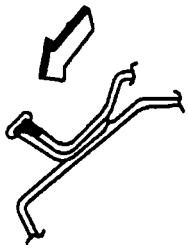

HOLD GUN NOZZLE IN DIRECTION OF ARROW IN ORDER TO EFFECTIVELY SEAL METAL JOINTS.

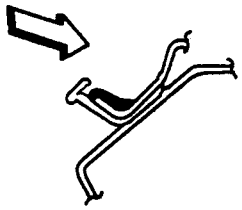

DO NOT HOLD GUN NOZZLE IN DIRECTION OF ARROW. SEALER APPLIED AS SHOWN IS INEFFECTIVE.

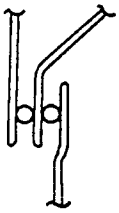

3 METAL THICKNESS

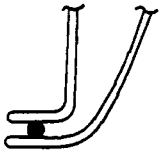

2 METAL THICKNESS

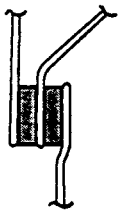

3 METAL THICKNESS

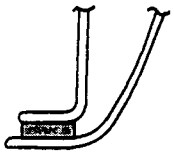

2 METAL THICKNESS

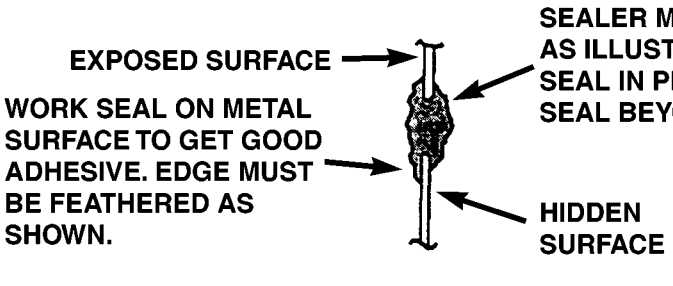

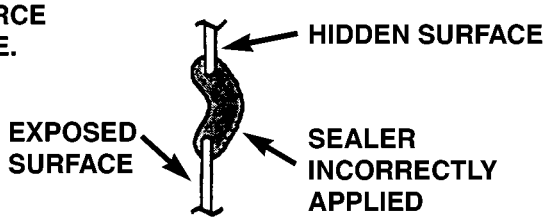

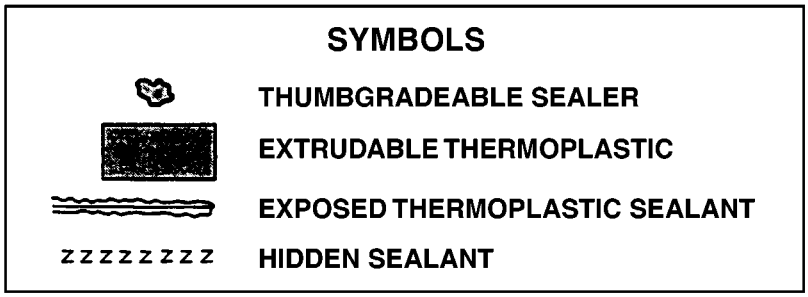

80866cc6

Fig. 5 METHODS OF APPLYING AUTO BODY SEALANT

SEALER LOCATIONS (Continued)

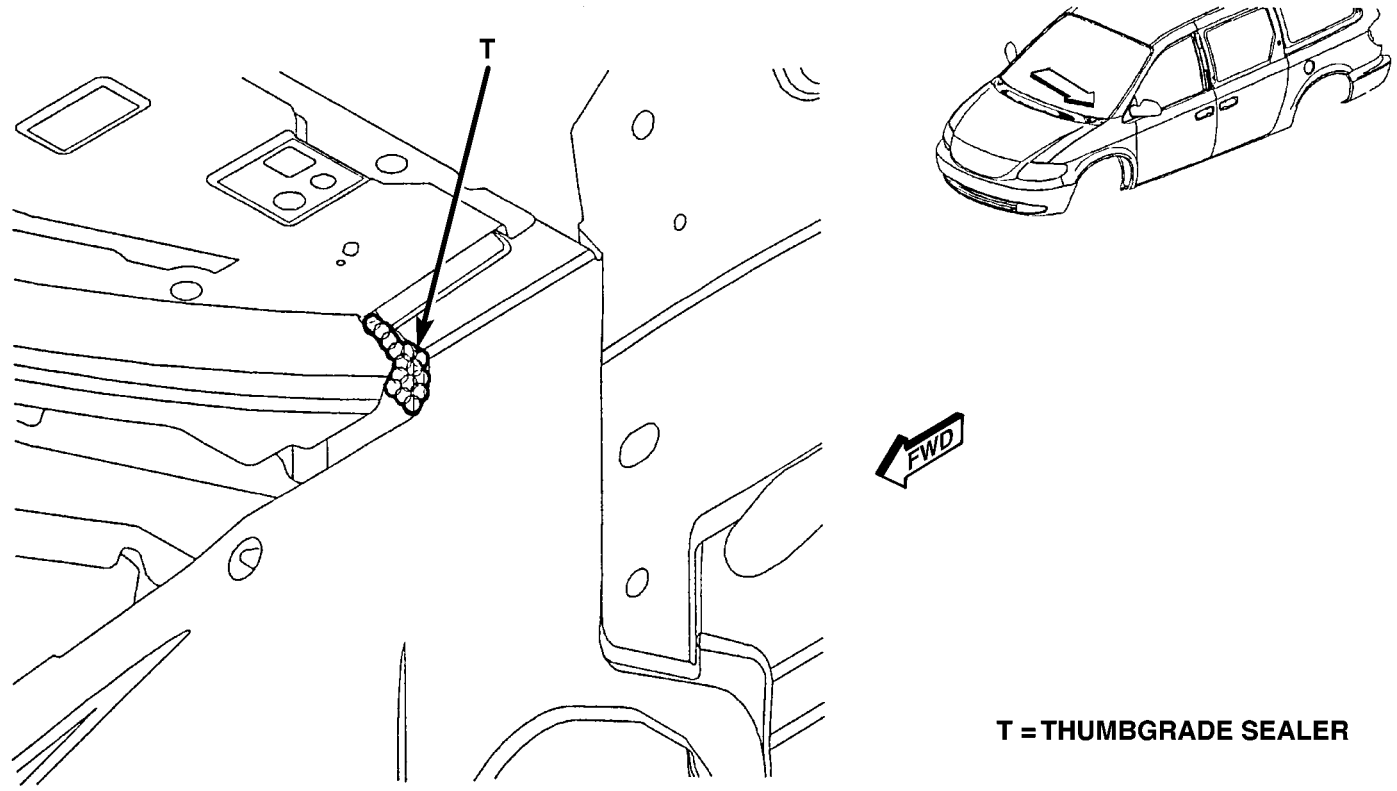

Fig. 6 LOWER WINDSHIELD OPENING - RIGHT AND LEFT SIDES

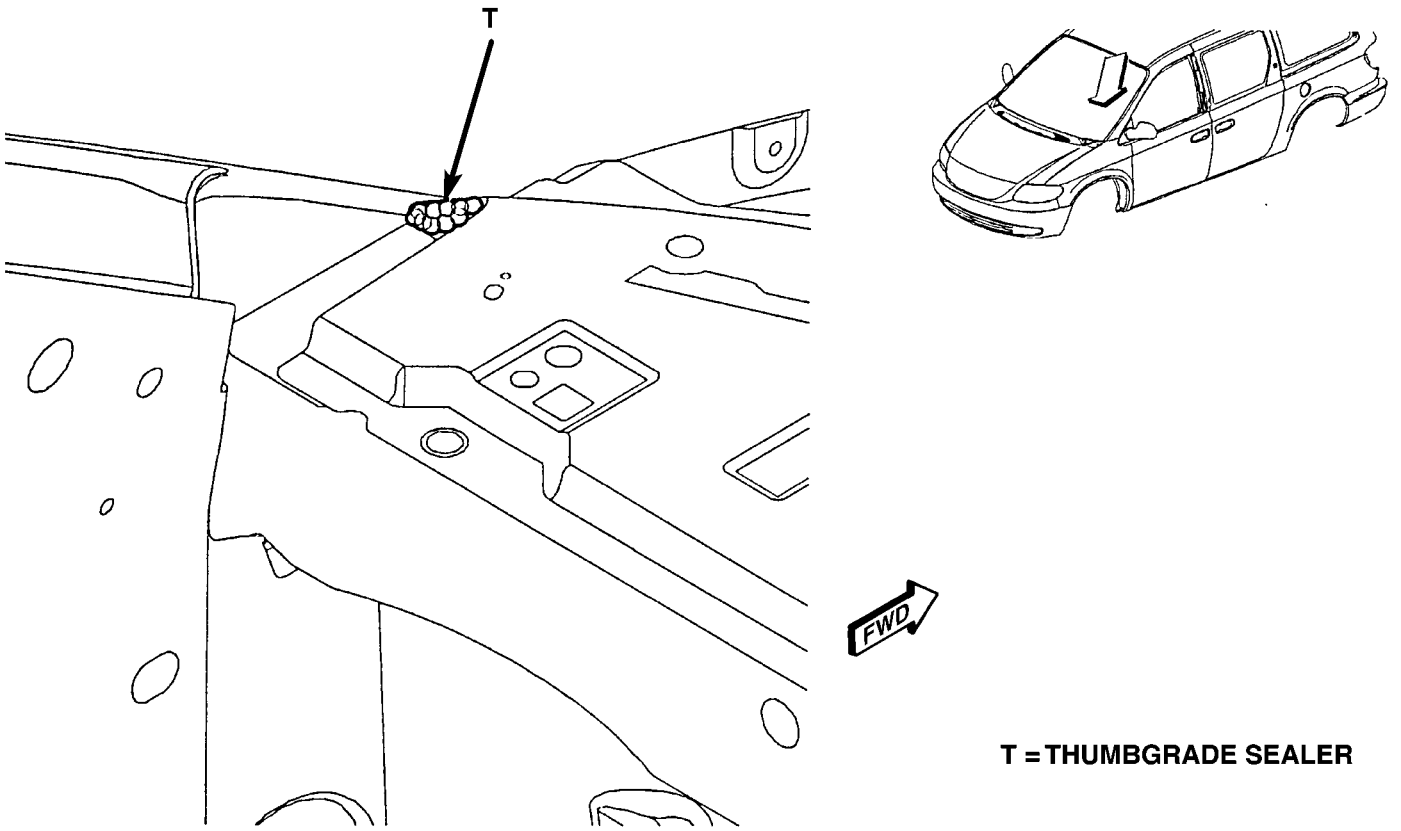

Fig. 7 COWL SIDE - LEFT AND RIGHT SIDES

SEALER LOCATIONS (Continued)

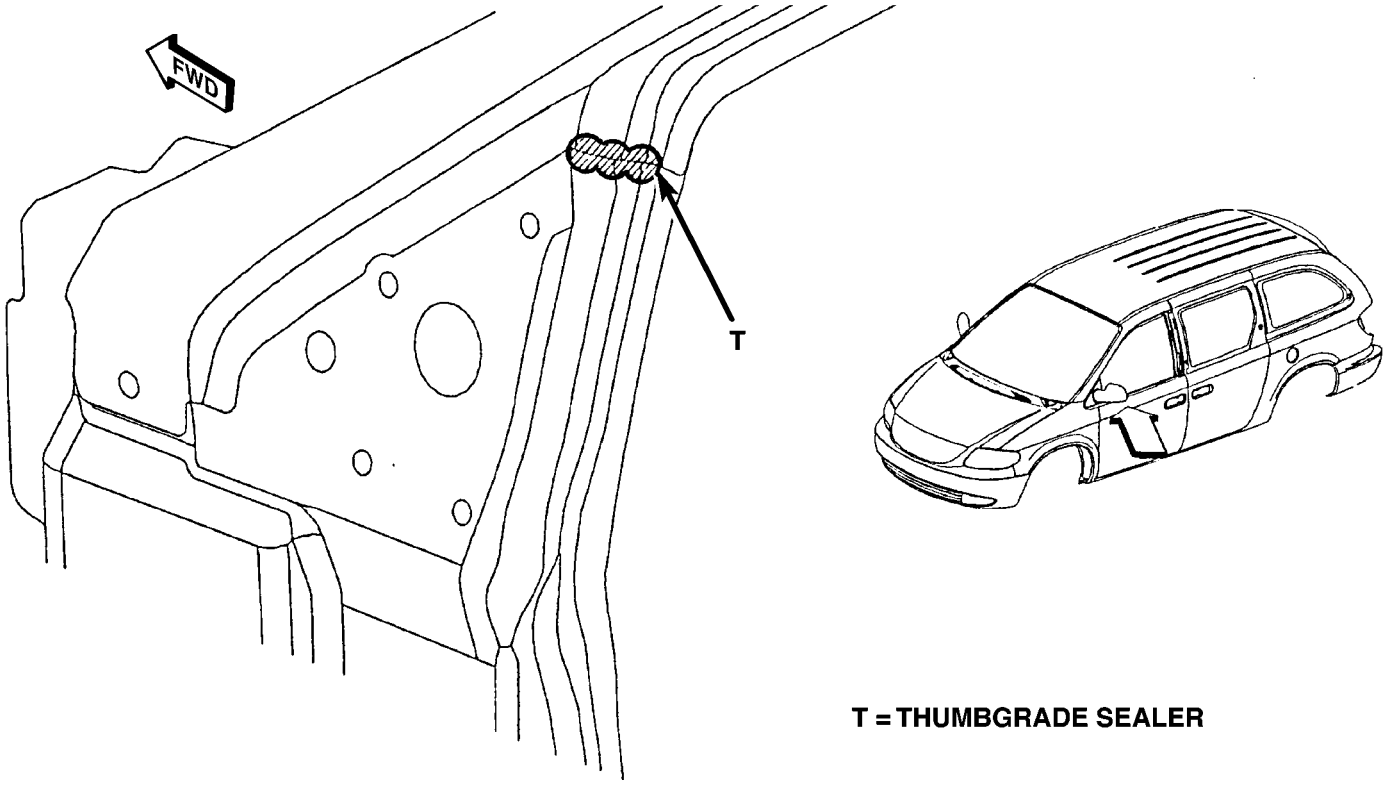

80c62369

Fig. 8 SIDE QUARTER WINDSHIELD OPENING - LEFT AND RIGHT SIDES

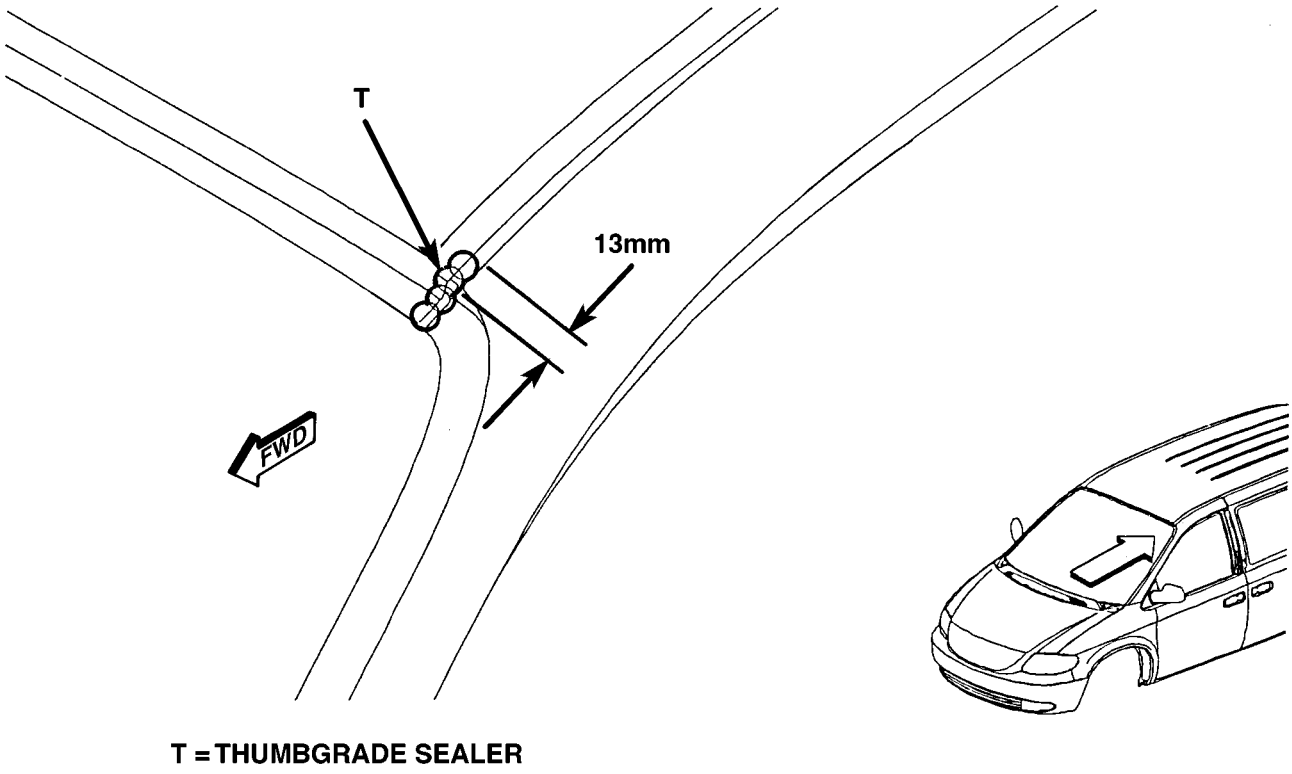

80c6236a

Fig. 9 UPPER WINDSHIELD A-PILLAR - LEFT AND RIGHT SIDES

SEALER LOCATIONS (Continued)

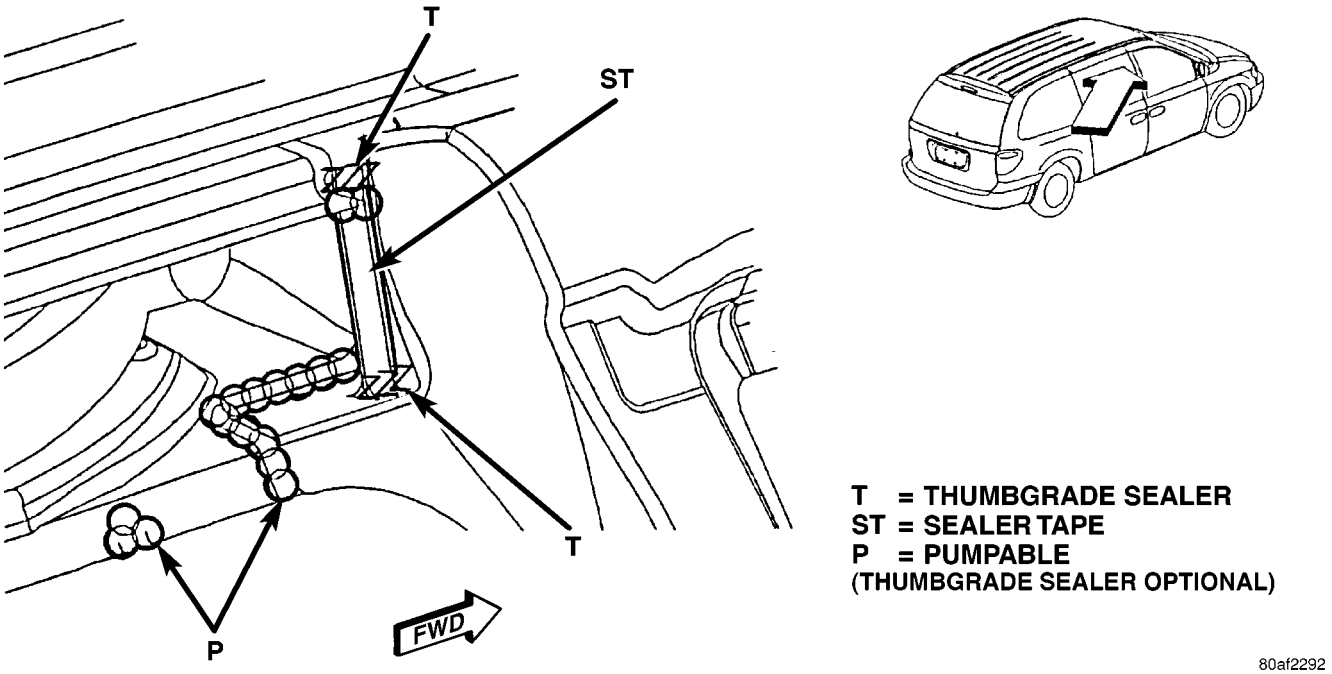

Fig. 10 ROOF TRACK C-PILLAR - LEFT AND RIGHT SIDES

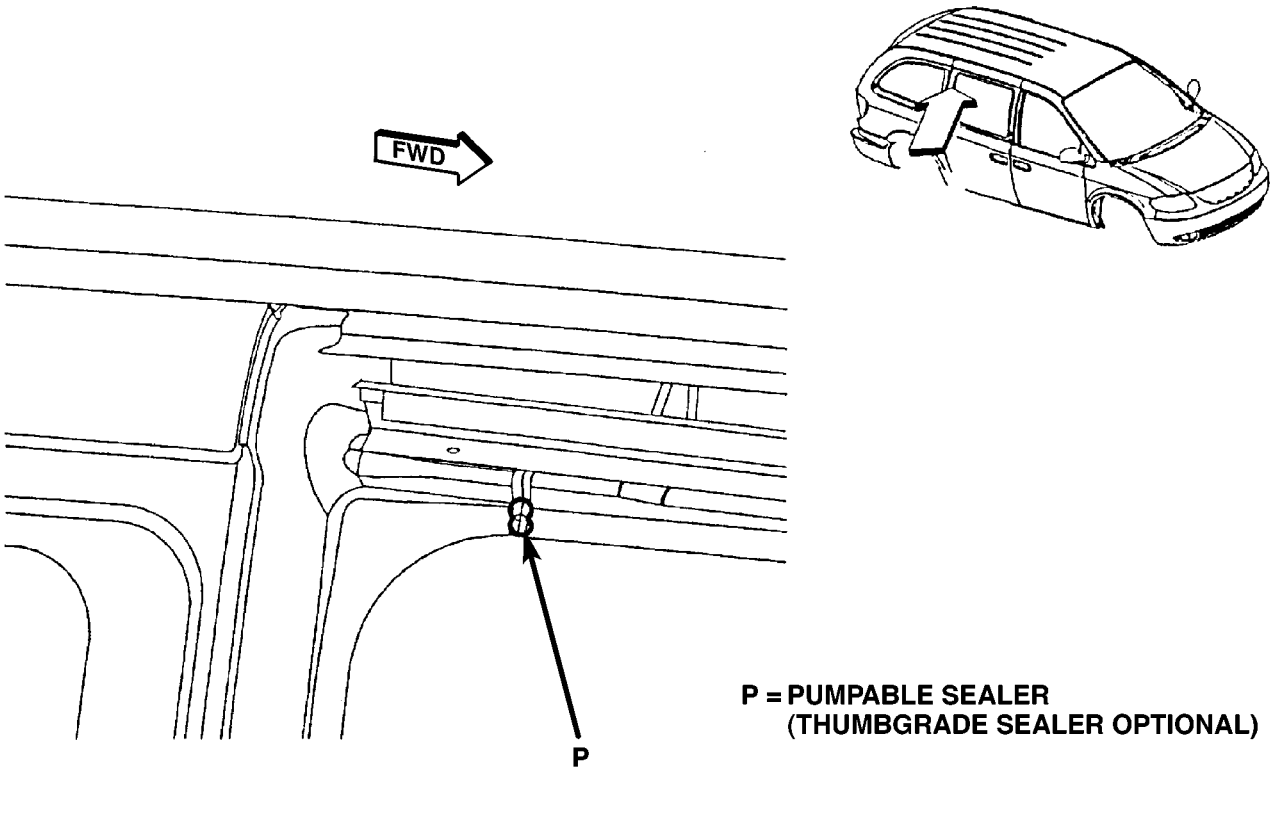

Fig. 11 SLIDING DOOR UPPER FLANGE SEAMS - LEFT AND RIGHT SIDES

SEALER LOCATIONS (Continued)

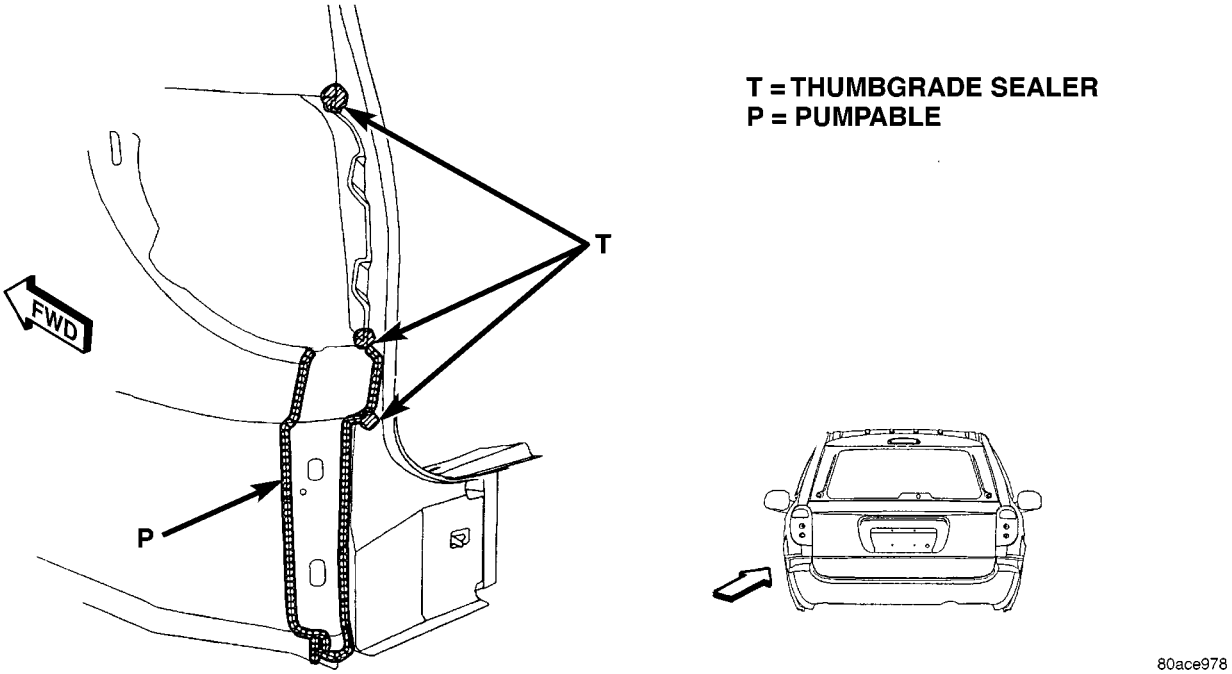

Fig. 12 QUARTER PANEL EXTERIOR AREA - LEFT AND RIGHT SIDES

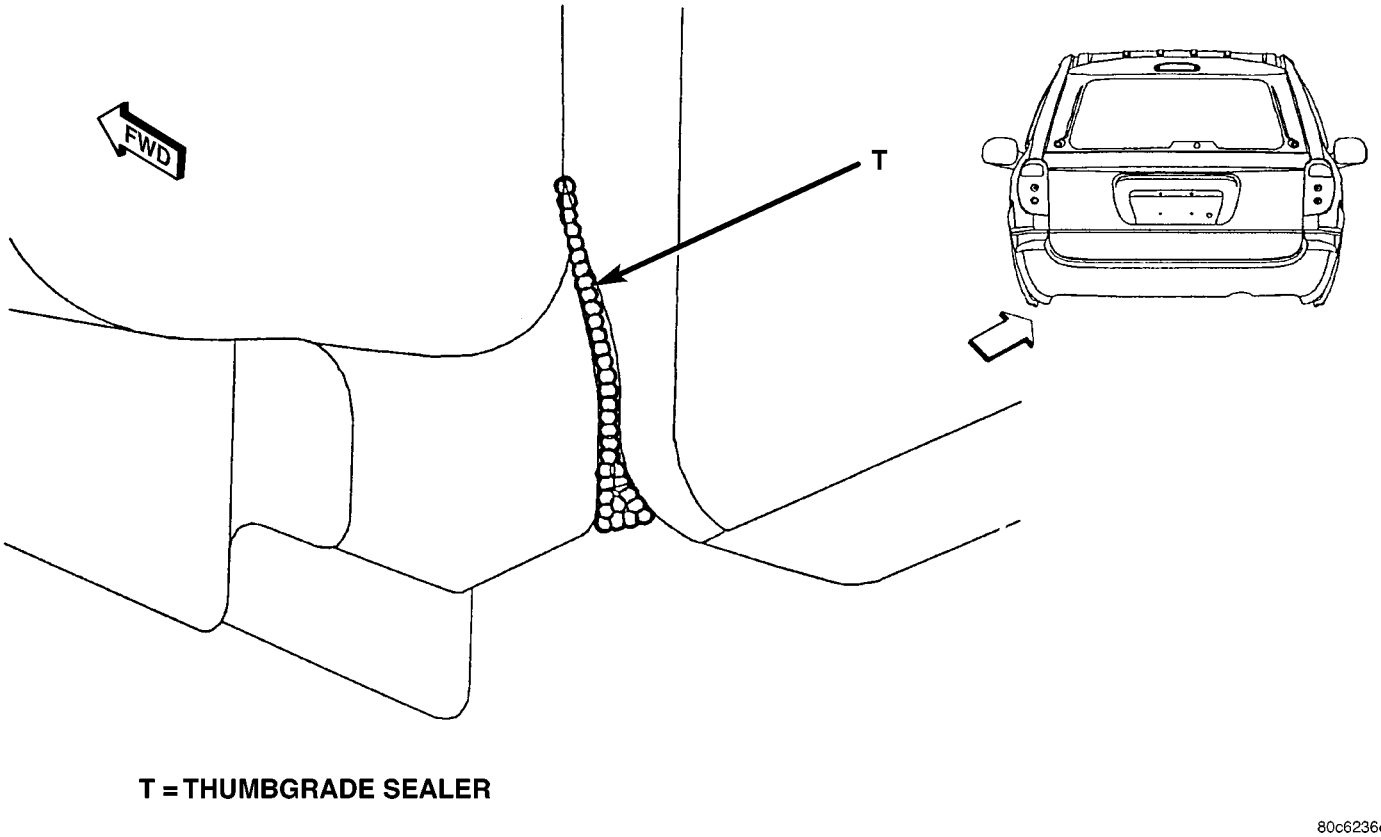

Fig. 13 LOWER REAR EXTERIOR CORNER PANELS - LEFT AND RIGHT SIDES

SEALER LOCATIONS (Continued)

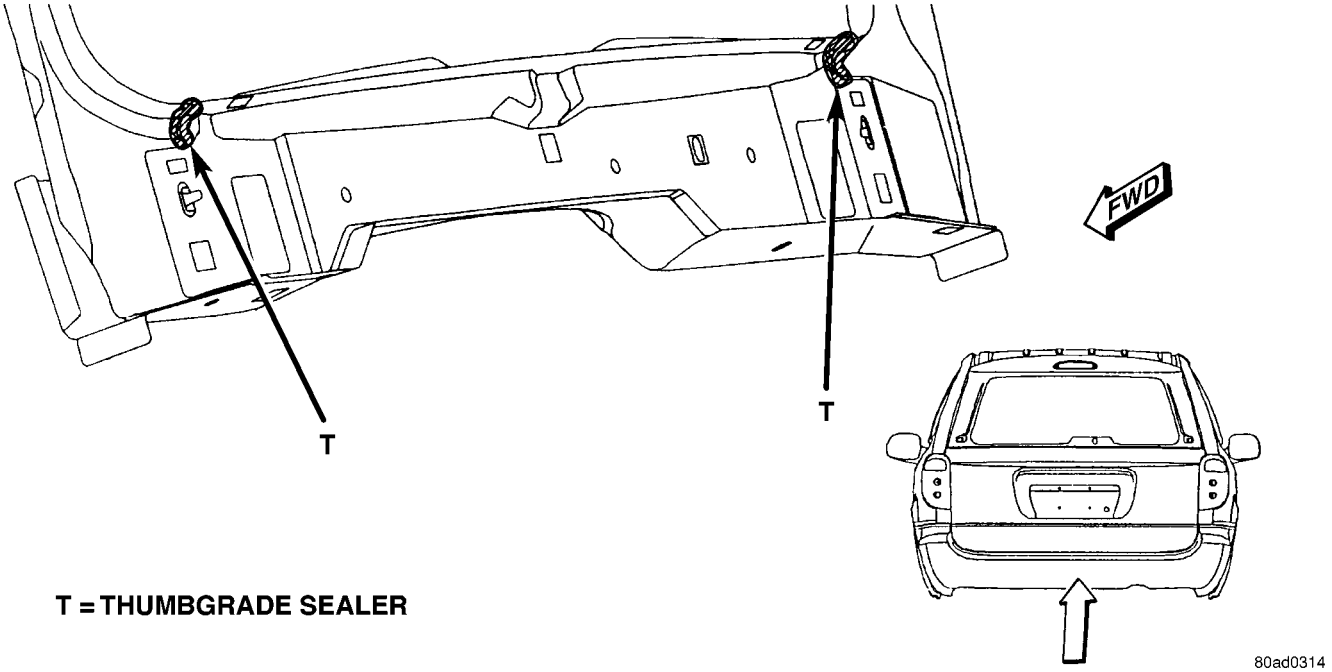

Fig. 14 LOWER SILL LIFTGATE OPENING - LEFT AND RIGHT SIDES

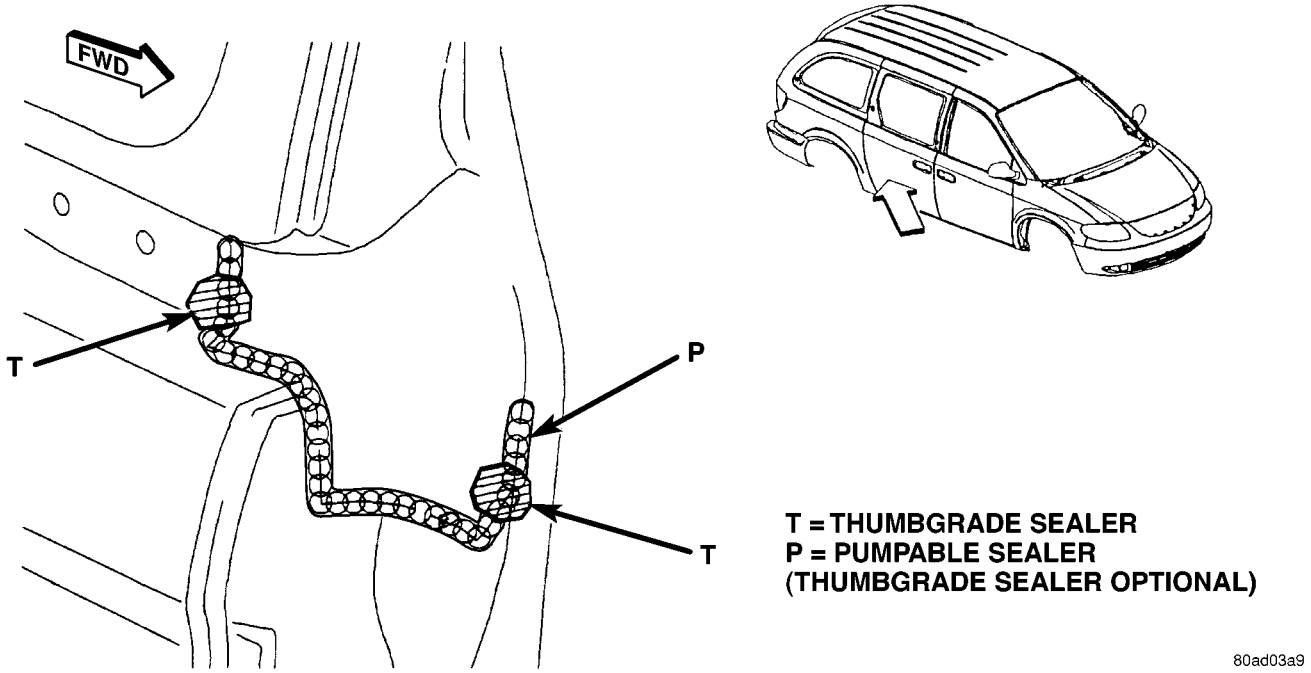

Fig. 15 C-PILLAR CAN - LEFT AND RIGHT SIDES

SEALER LOCATIONS (Continued)

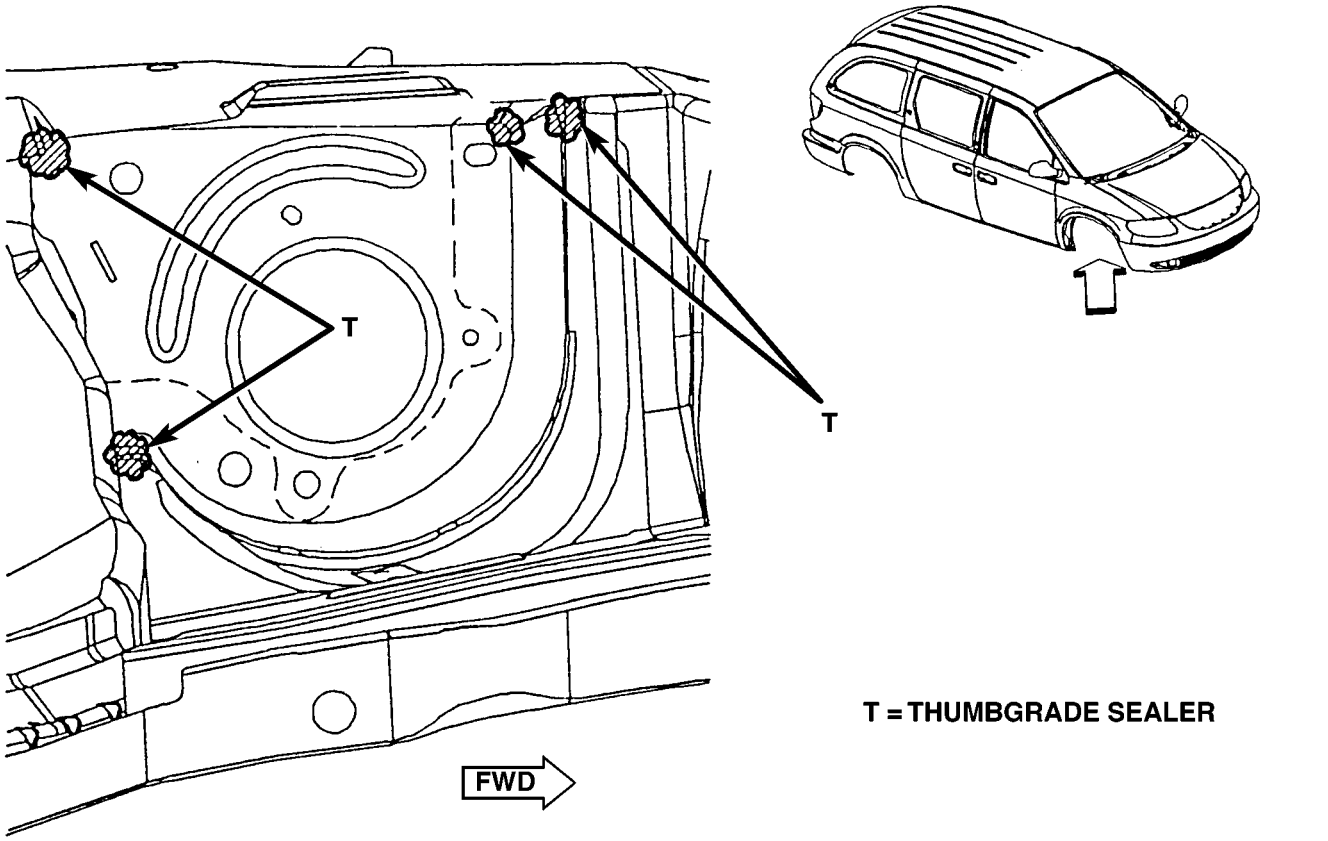

Fig. 16 SHOCK TOWER AREA - LEFT AND RIGHT SIDES

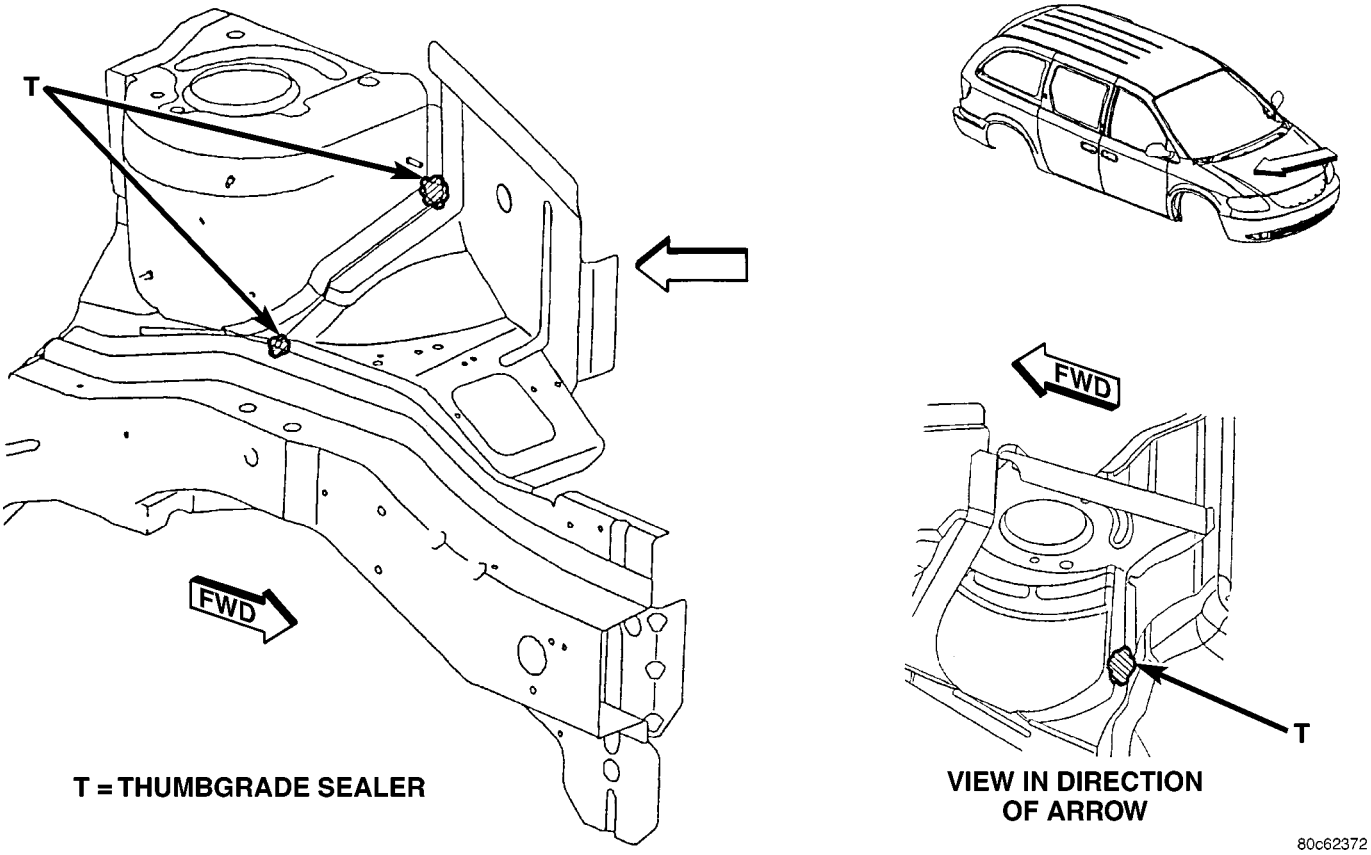

Fig. 17 OUTER SHOCK TOWER AREA - LEFT AND RIGHT SIDES

SEALER LOCATIONS (Continued)

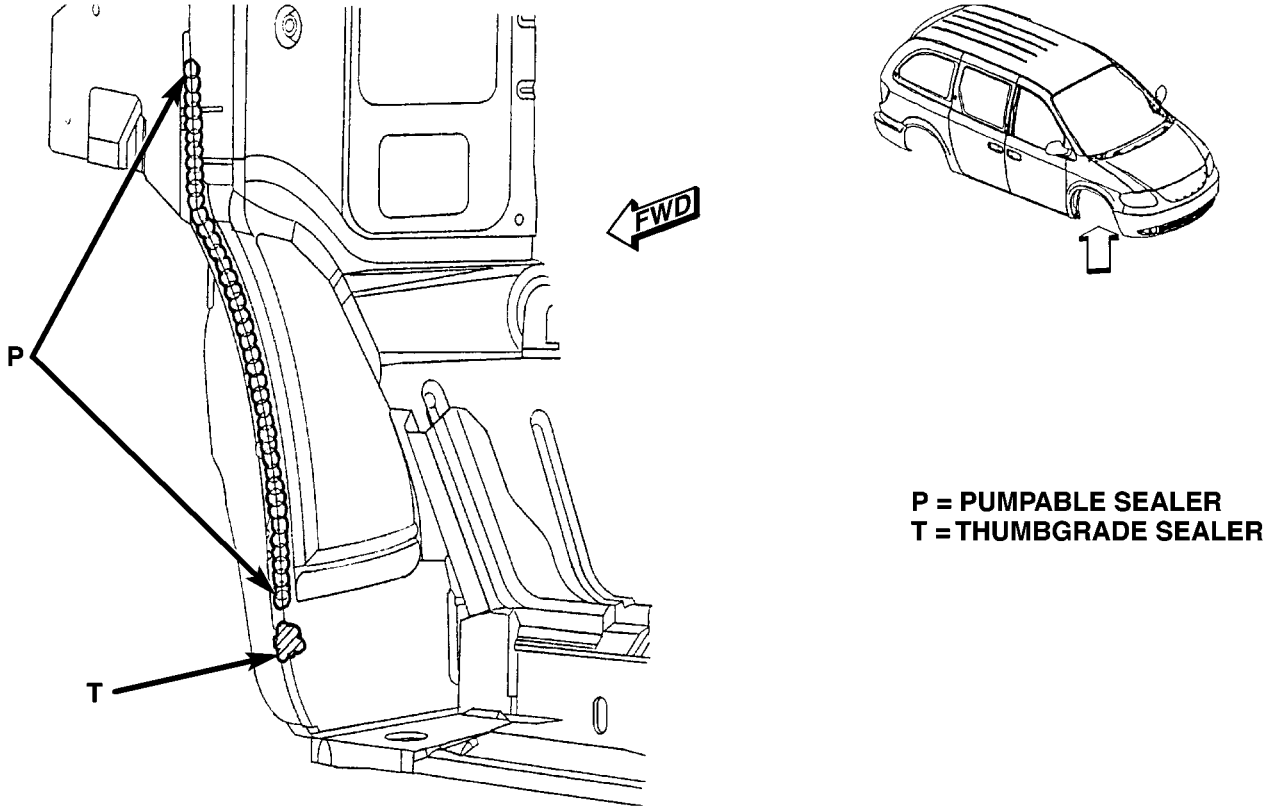

Fig. 18 CROSS MEMBER SUPPORT - LEFT AND RIGHT SIDES

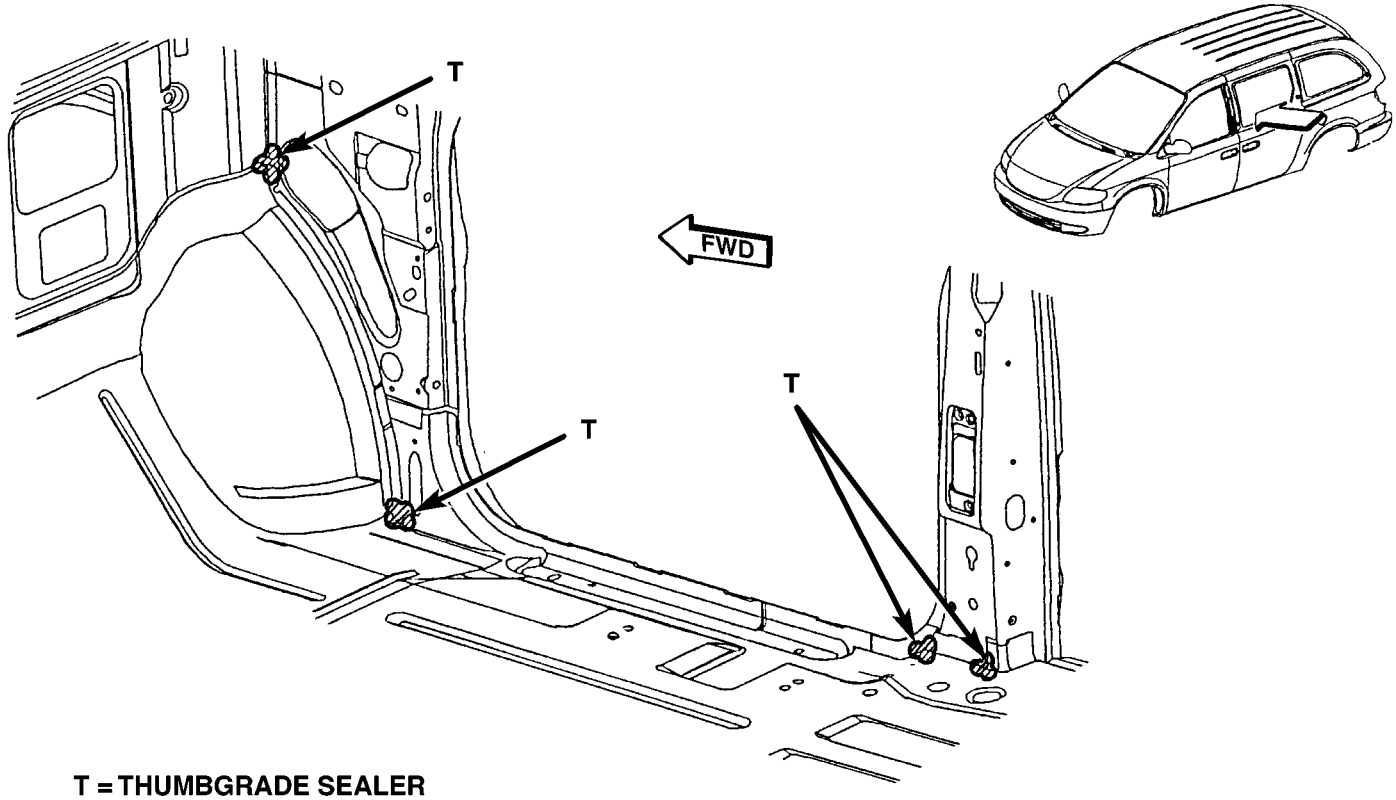

Fig. 19 A & B-PILLAR FLOOR PAN RISERS - LEFT AND RIGHT SIDES

SEALER LOCATIONS (Continued)

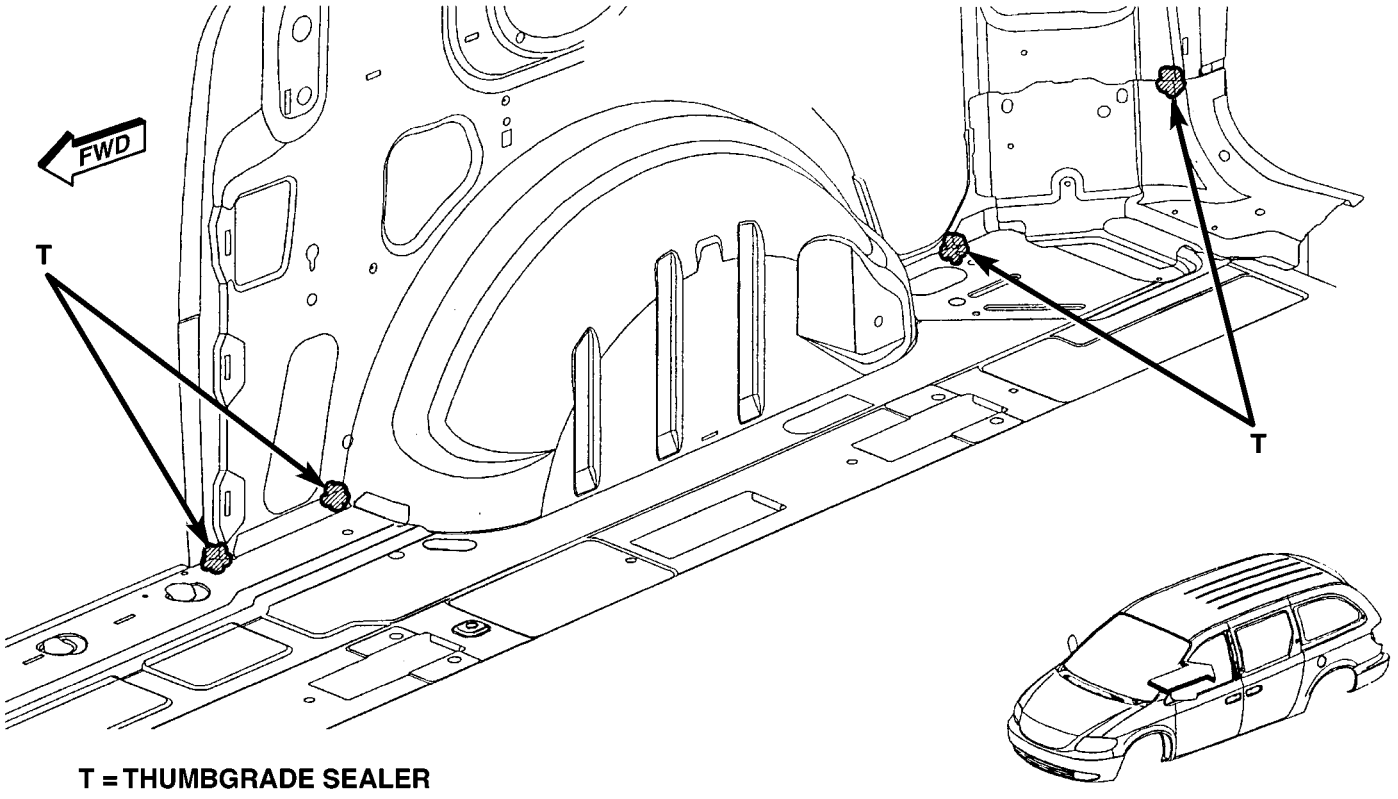

Fig. 20 REAR WHEEL HOUSE FLOOR PAN - LEFT AND RIGHT SIDES

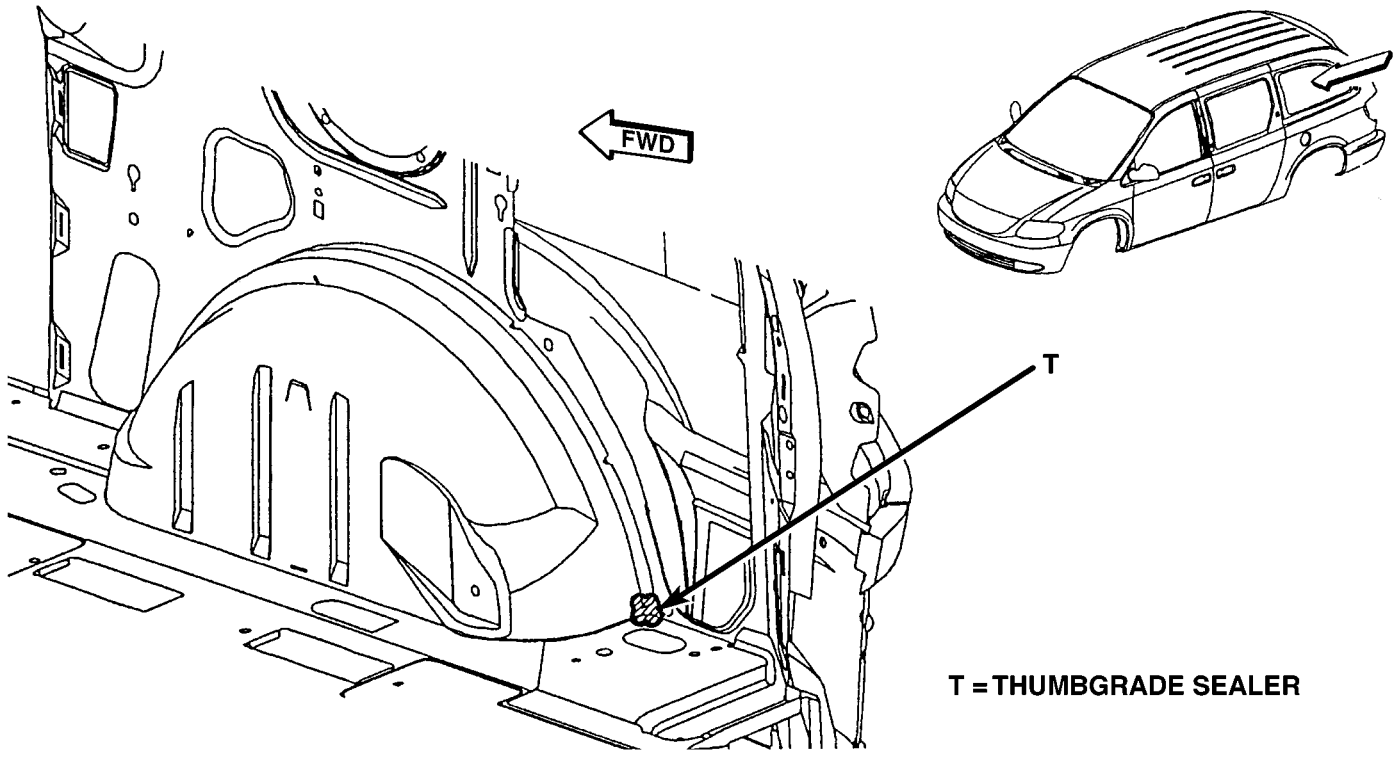

Fig. 21 REAR WHEELHOUSE TO FLOOR PAN - LEFT AND RIGHT SIDES

SEALER LOCATIONS (Continued)

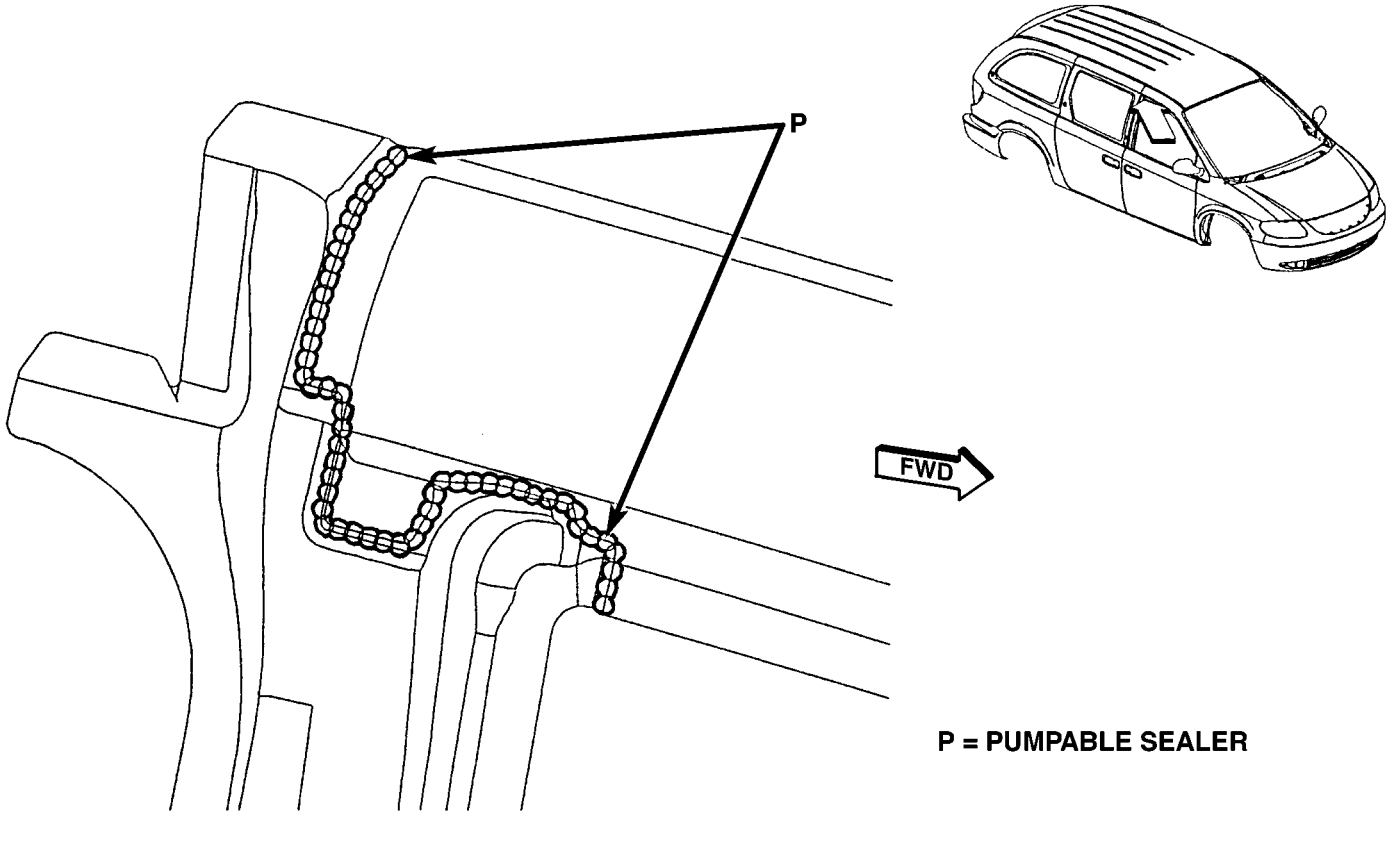

Fig. 22 UPPER SLIDING DOOR FLANGE - LEFT AND RIGHT SIDES

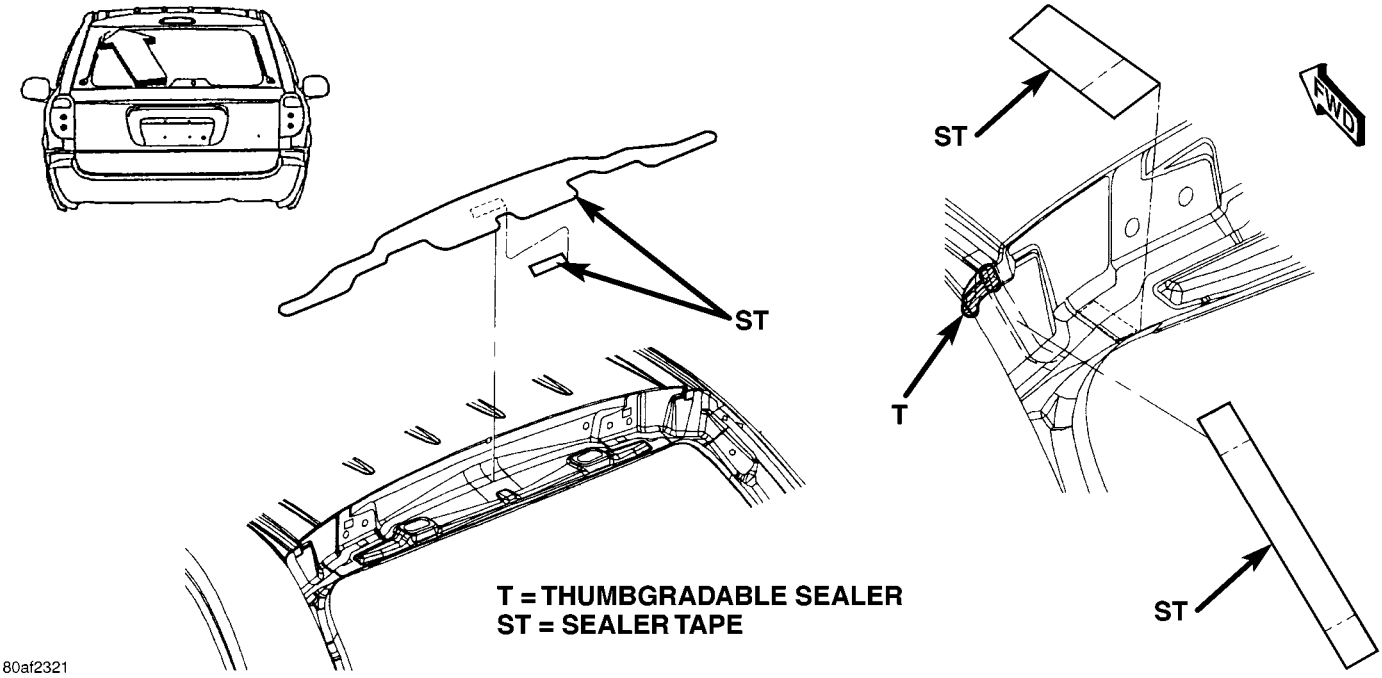

Fig. 23 UPPER LIFTGATE HINGE AREA - LEFT AND RIGHT SIDES

SEALER LOCATIONS (Continued)

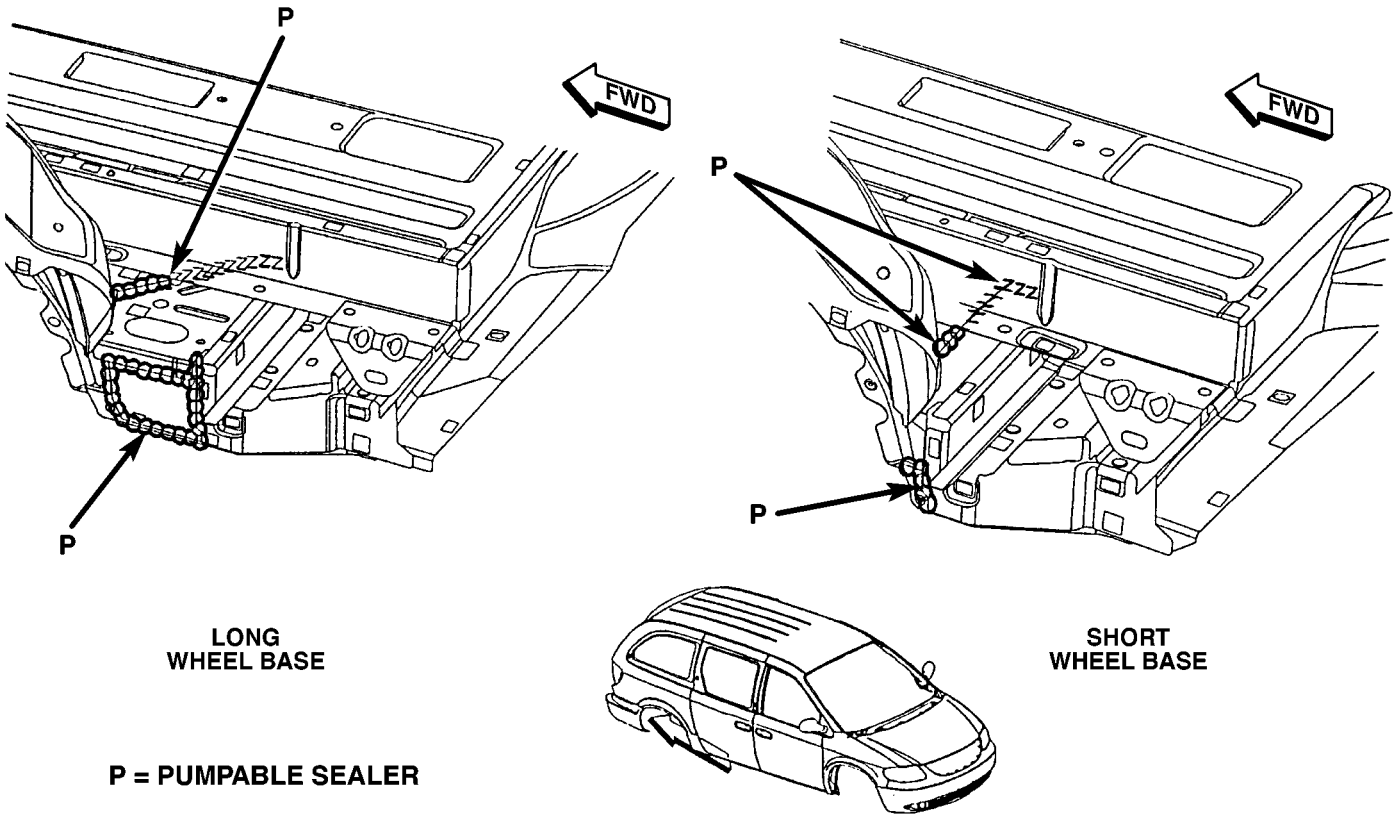

Fig. 24 REAR BRACKET SUPPORT REAR HANGER - LEFT AND RIGHT SIDES

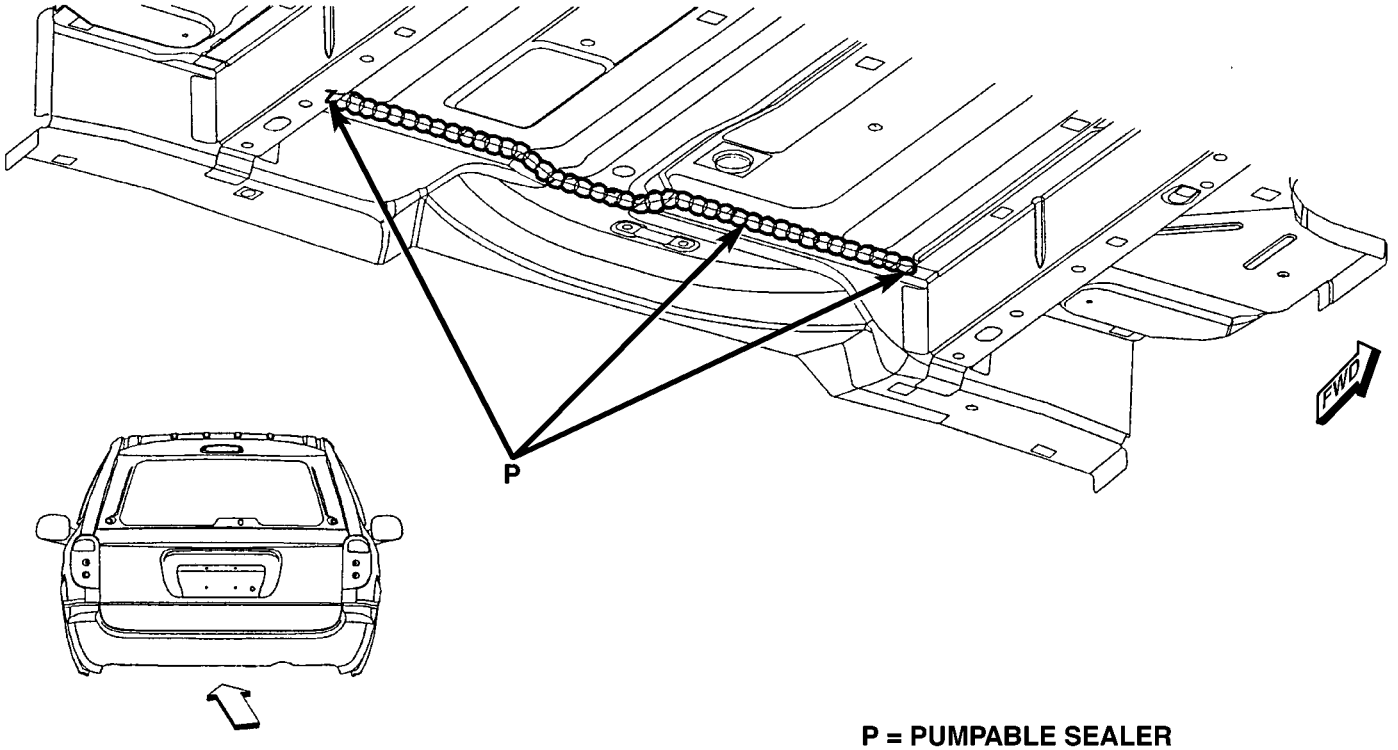

Fig. 25 LIFTGATE PANEL OPENING - UNDERSIDE

SEALER LOCATIONS (Continued)

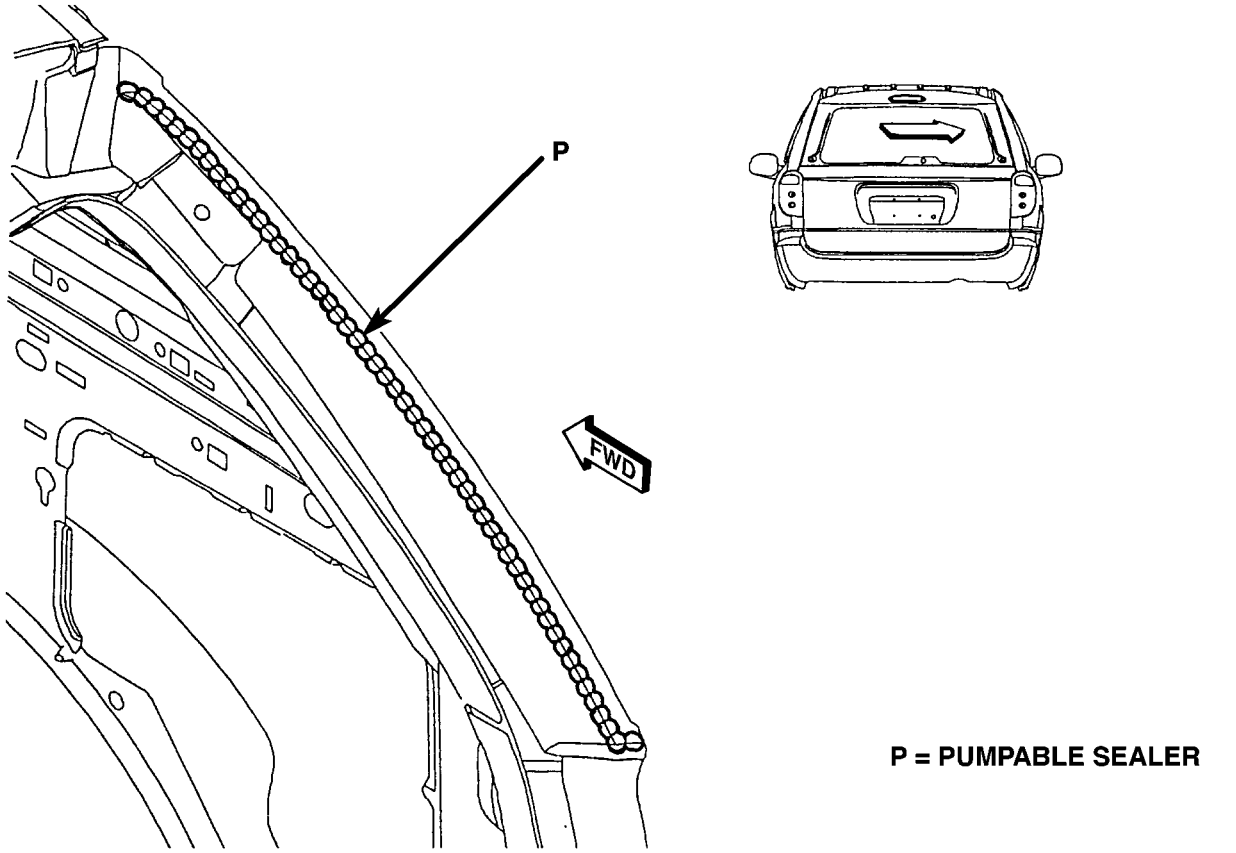

Fig. 26 D-PILLAR INSIDE SEAM - LEFT AND RIGHT SIDES

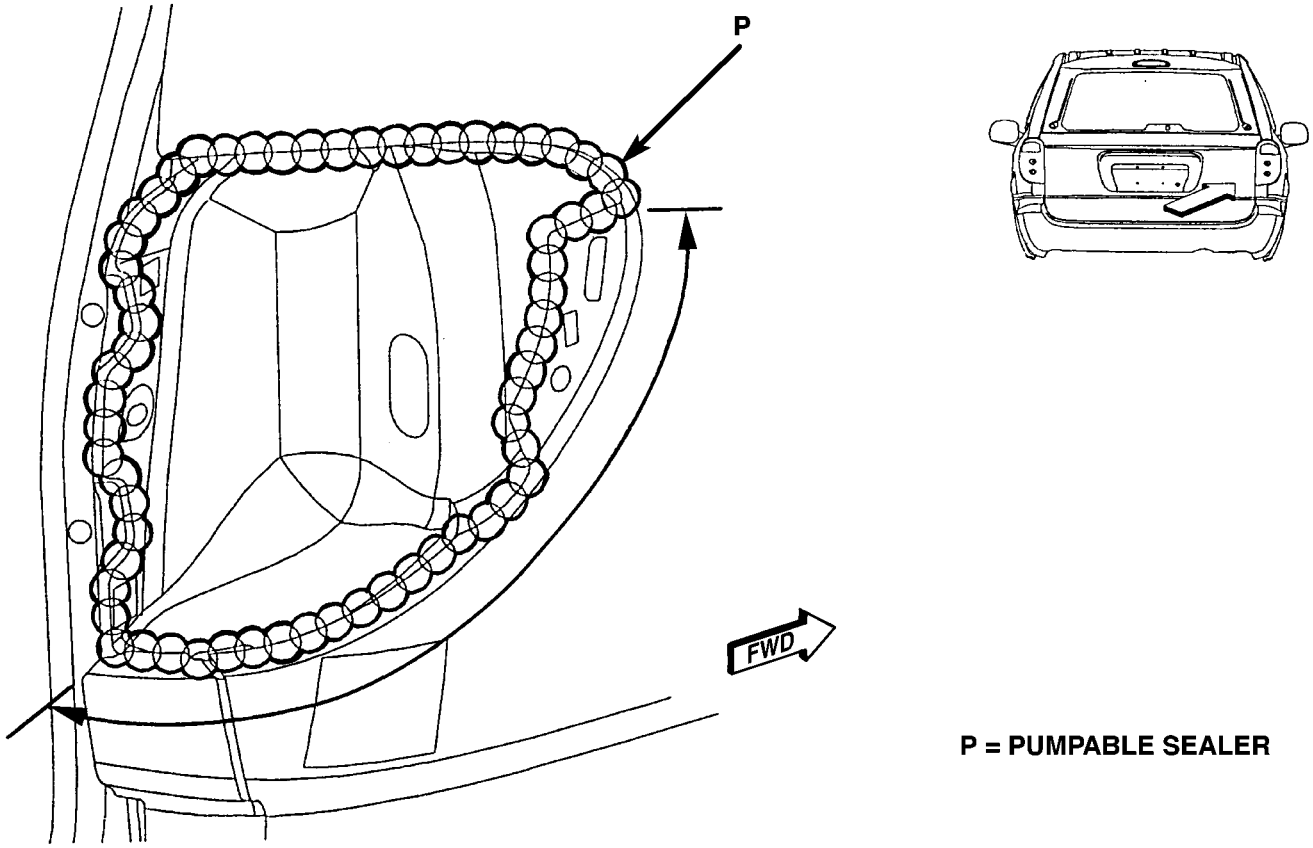

Fig. 27 REAR TAIL LAMP AREA SEAMS - LEFT AND RIGHT SIDES

SEALER LOCATIONS (Continued)

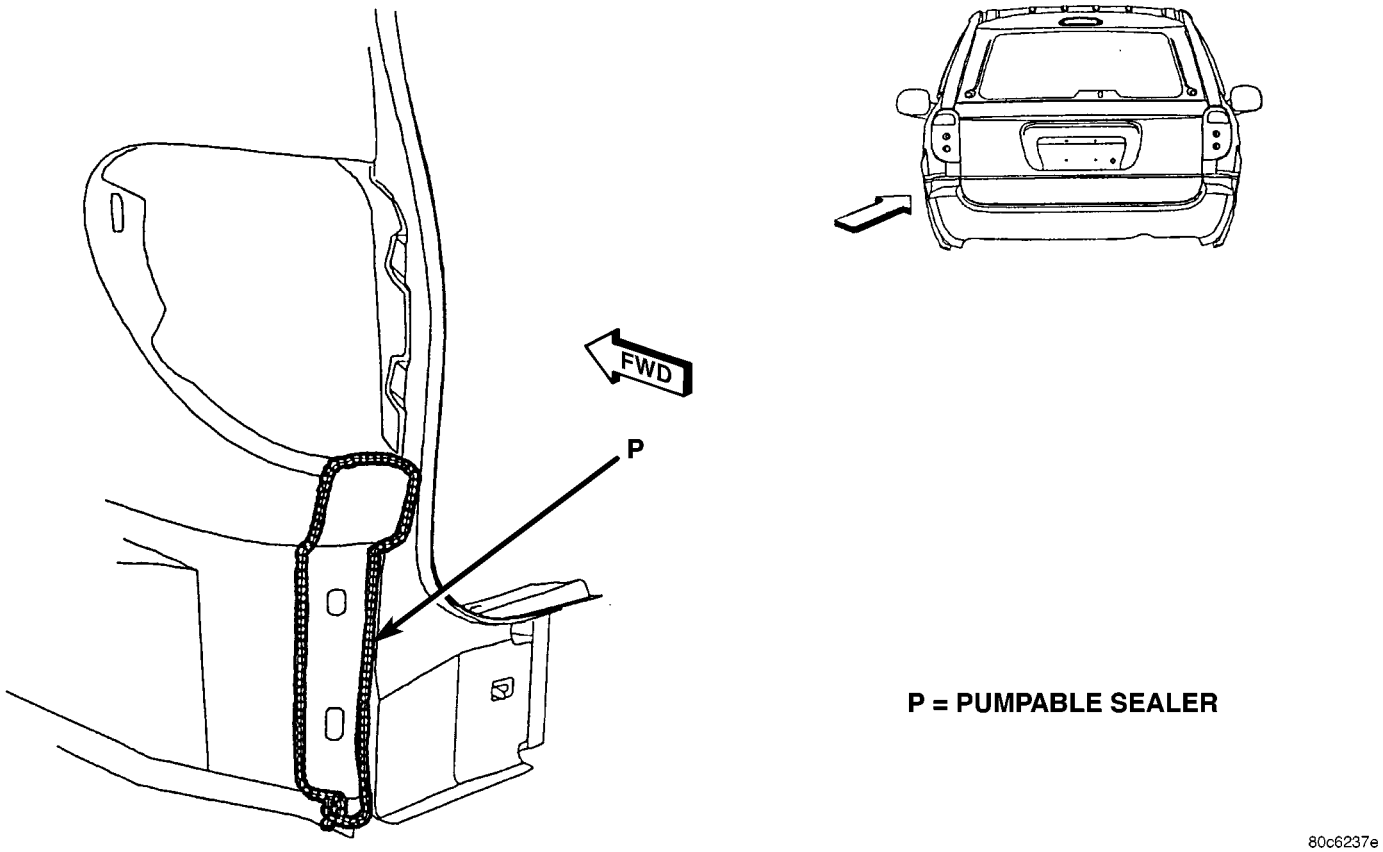

Fig. 28 UPPER LIFTGATE PANEL SILL - LEFT AND RIGHT SIDES

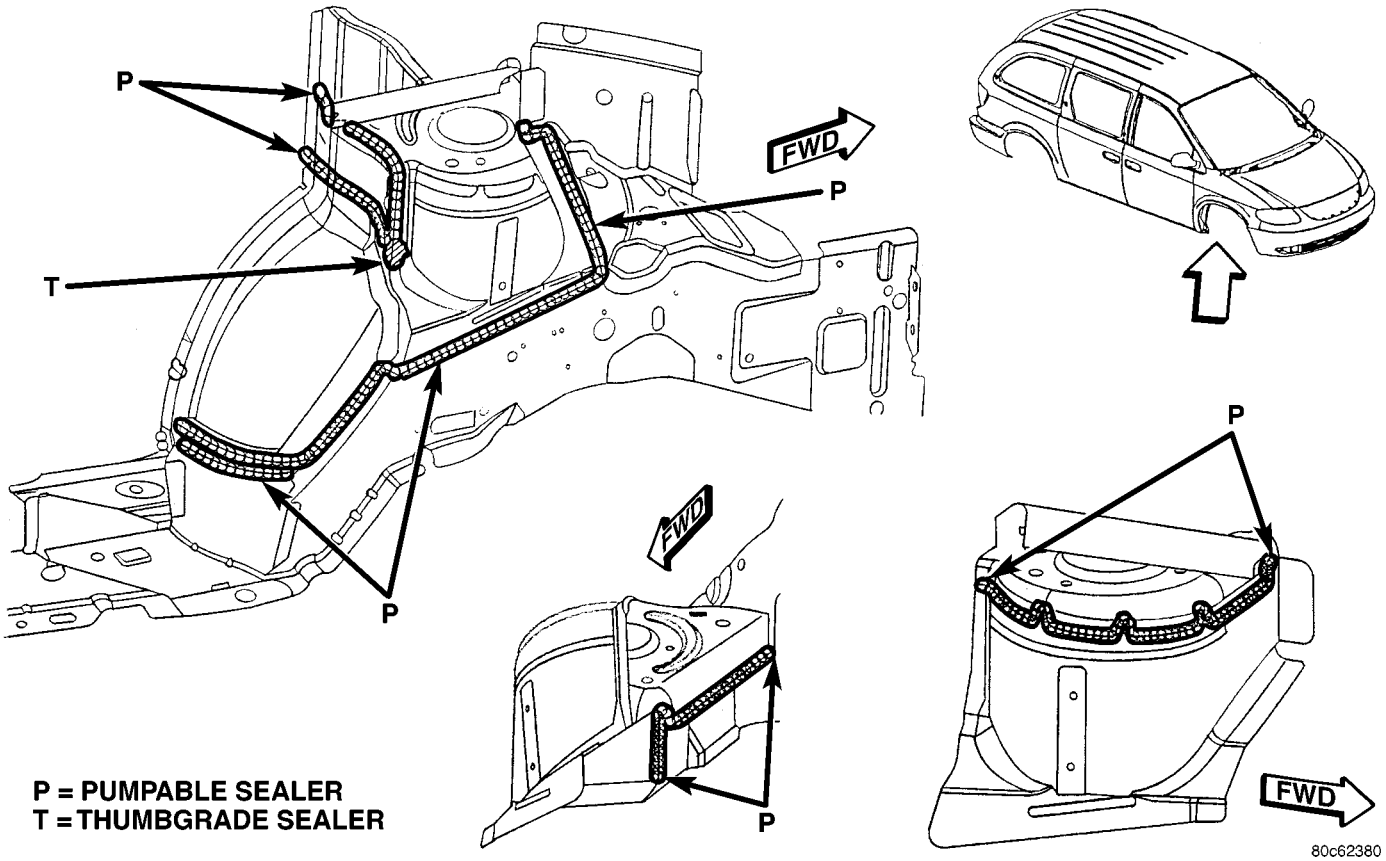

Fig. 29 FRONT WHEELHOUSE & SHOCK TOWER - LEFT AND RIGHT SIDES

SEALER LOCATIONS (Continued)

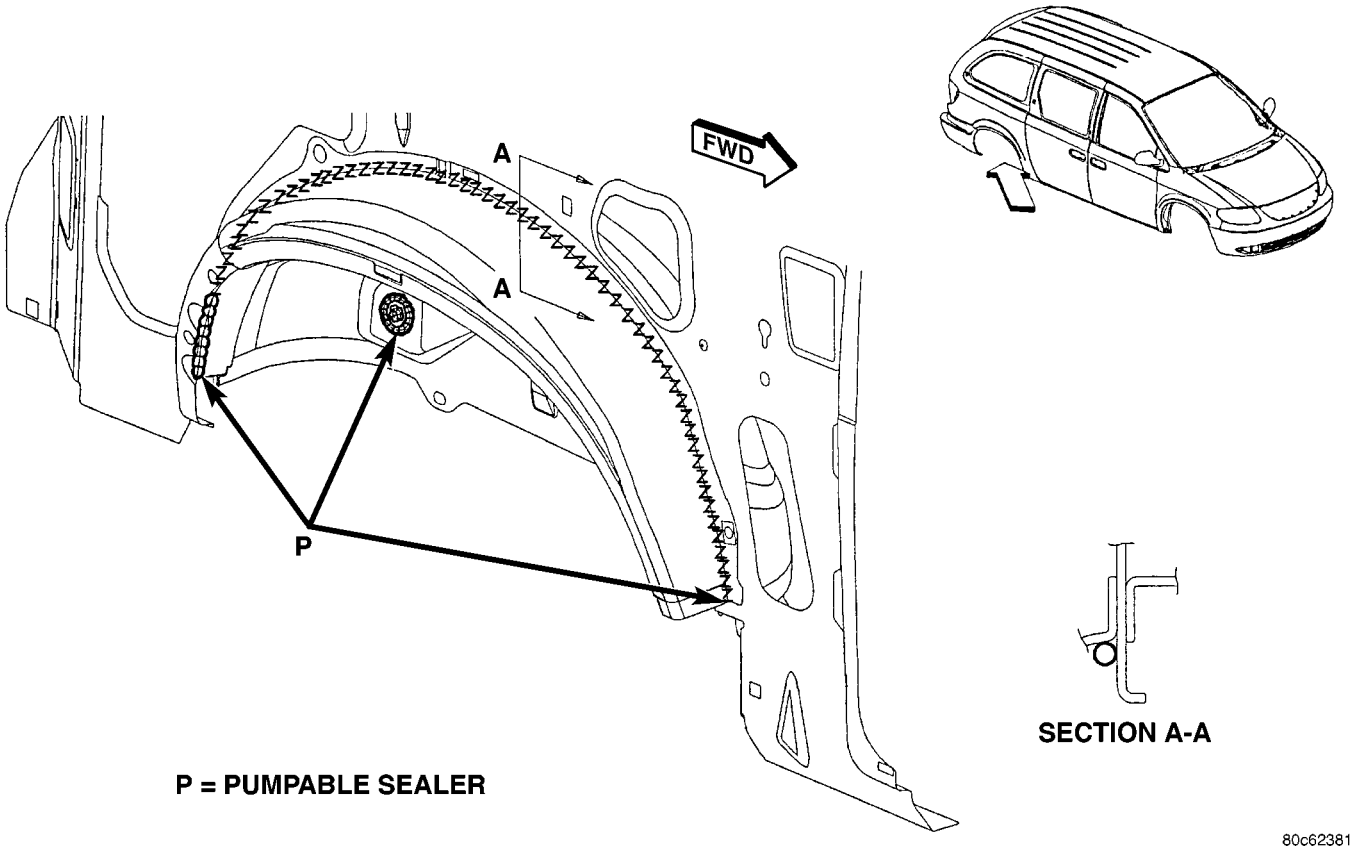

Fig. 30 REAR QUARTER WHEELHOUSE LIP & SEAT ANCHOR BOLT - LEFT AND RIGHT SIDES

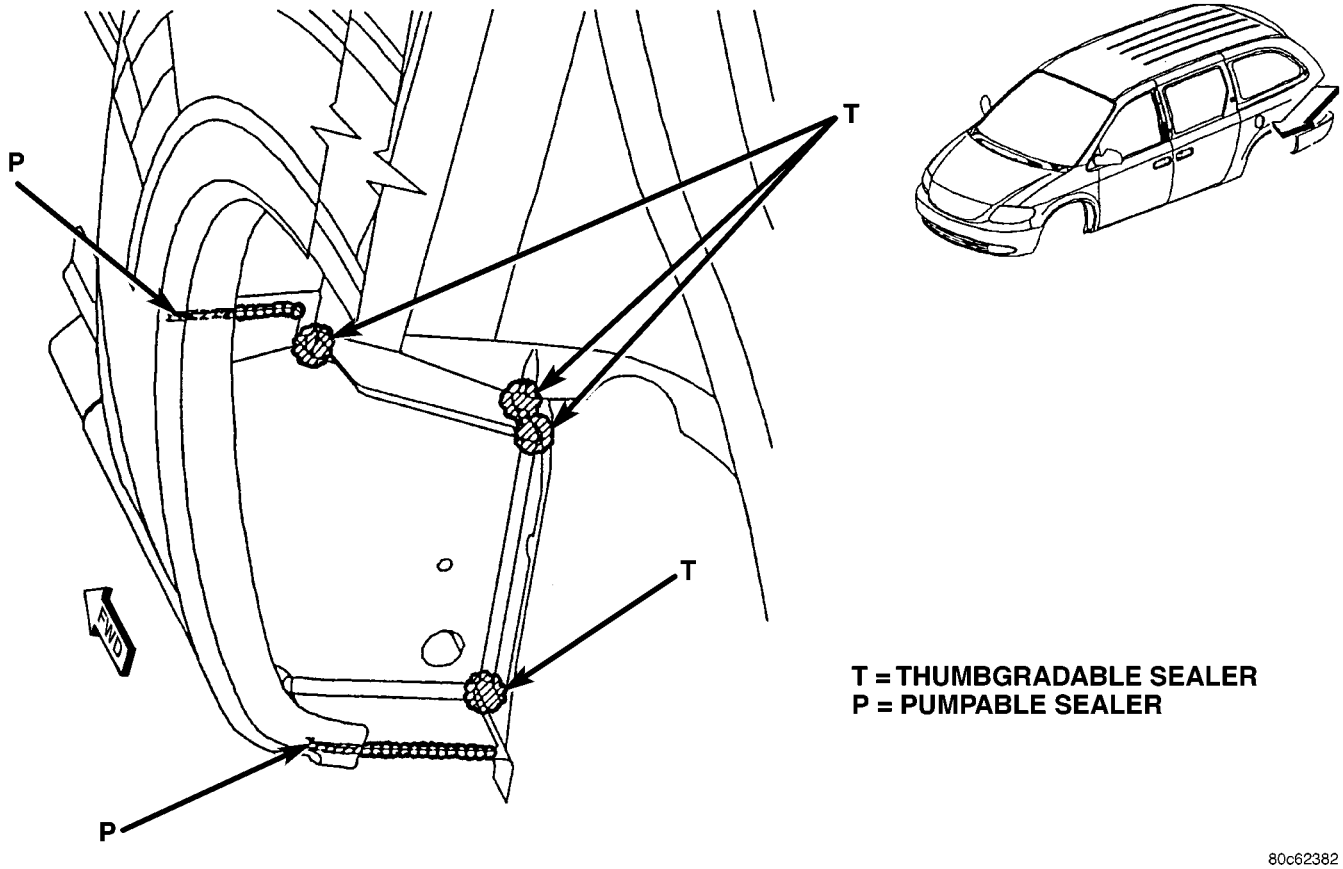

Fig. 31 TAIL LAMP CAN - LEFT AND RIGHT SIDES

SEALER LOCATIONS (Continued)

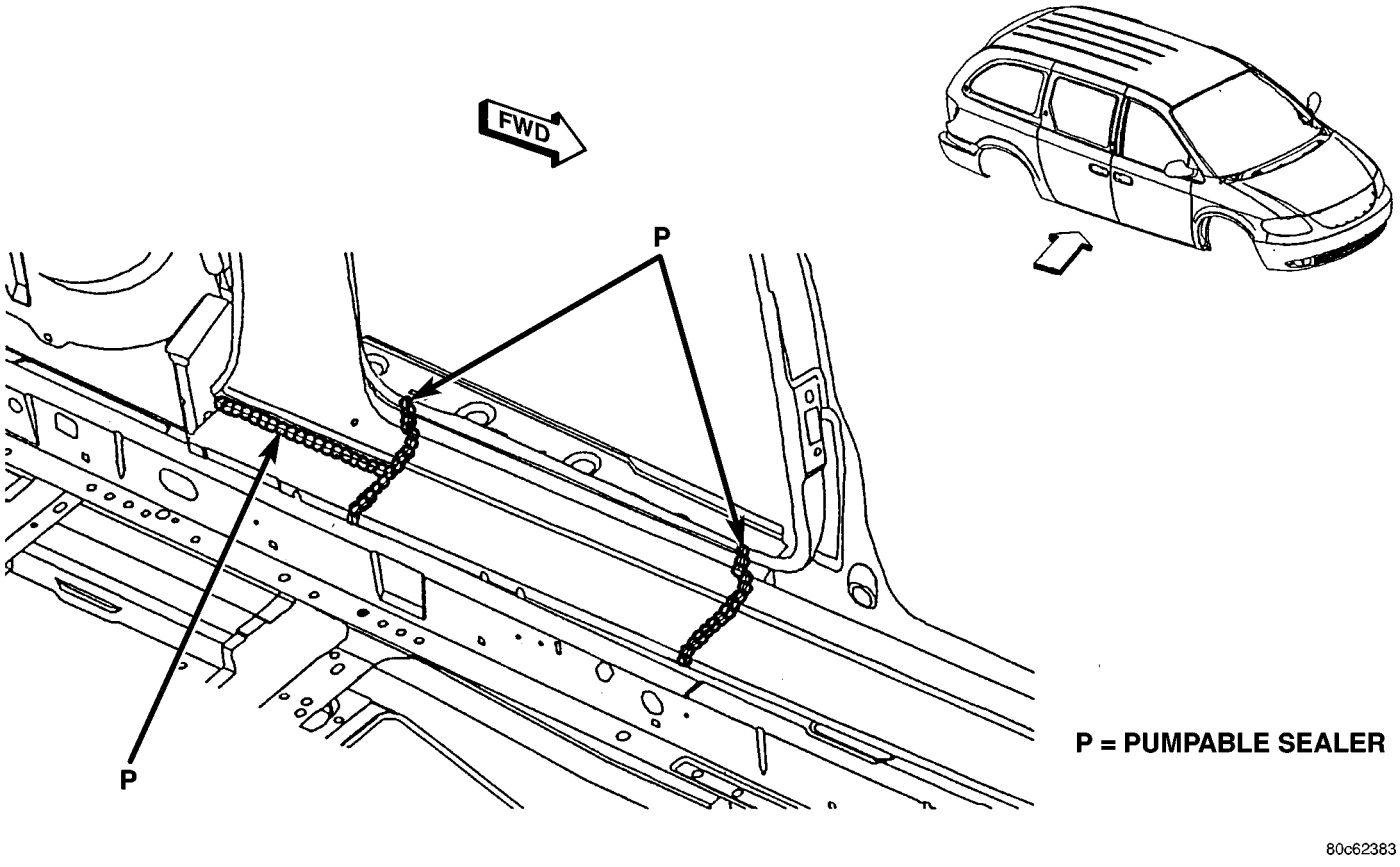

Fig. 32 B-PILLAR AND SILL AREAS - LEFT AND RIGHT SIDES

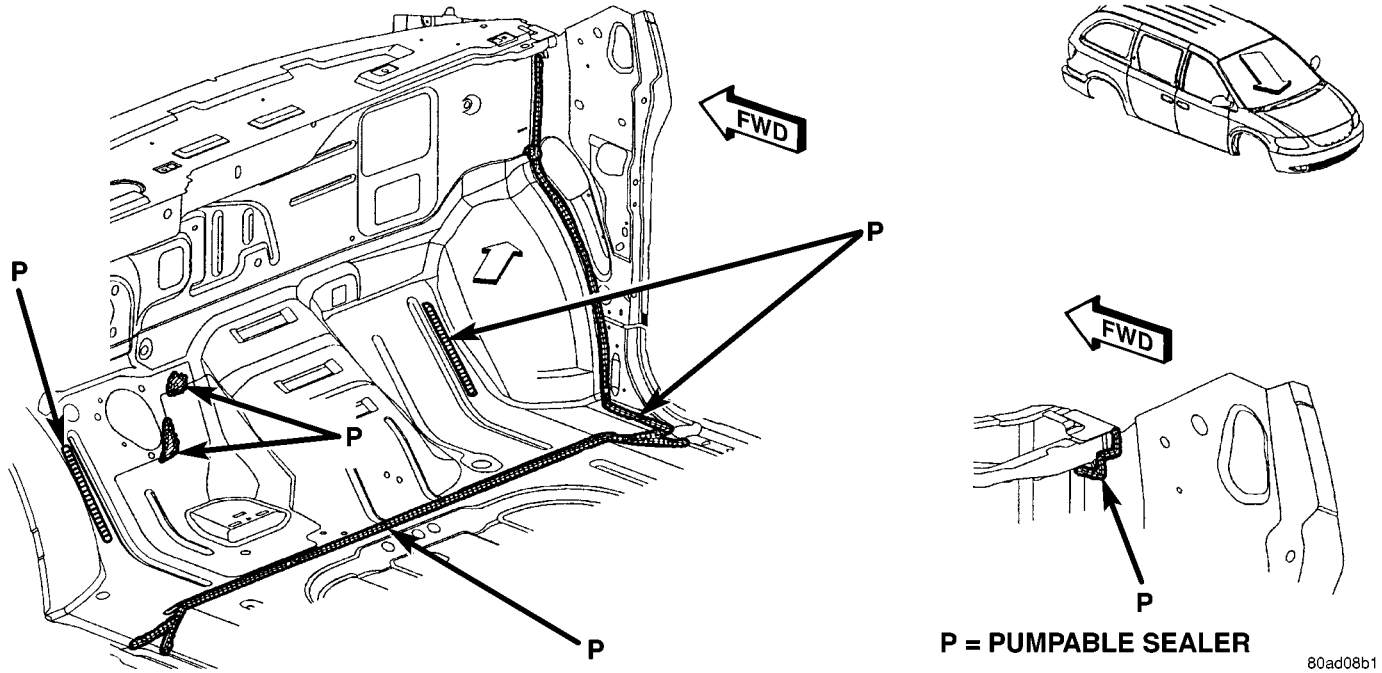

Fig. 33 FRONT FLOOR PAN & RISER

SEALER LOCATIONS (Continued)

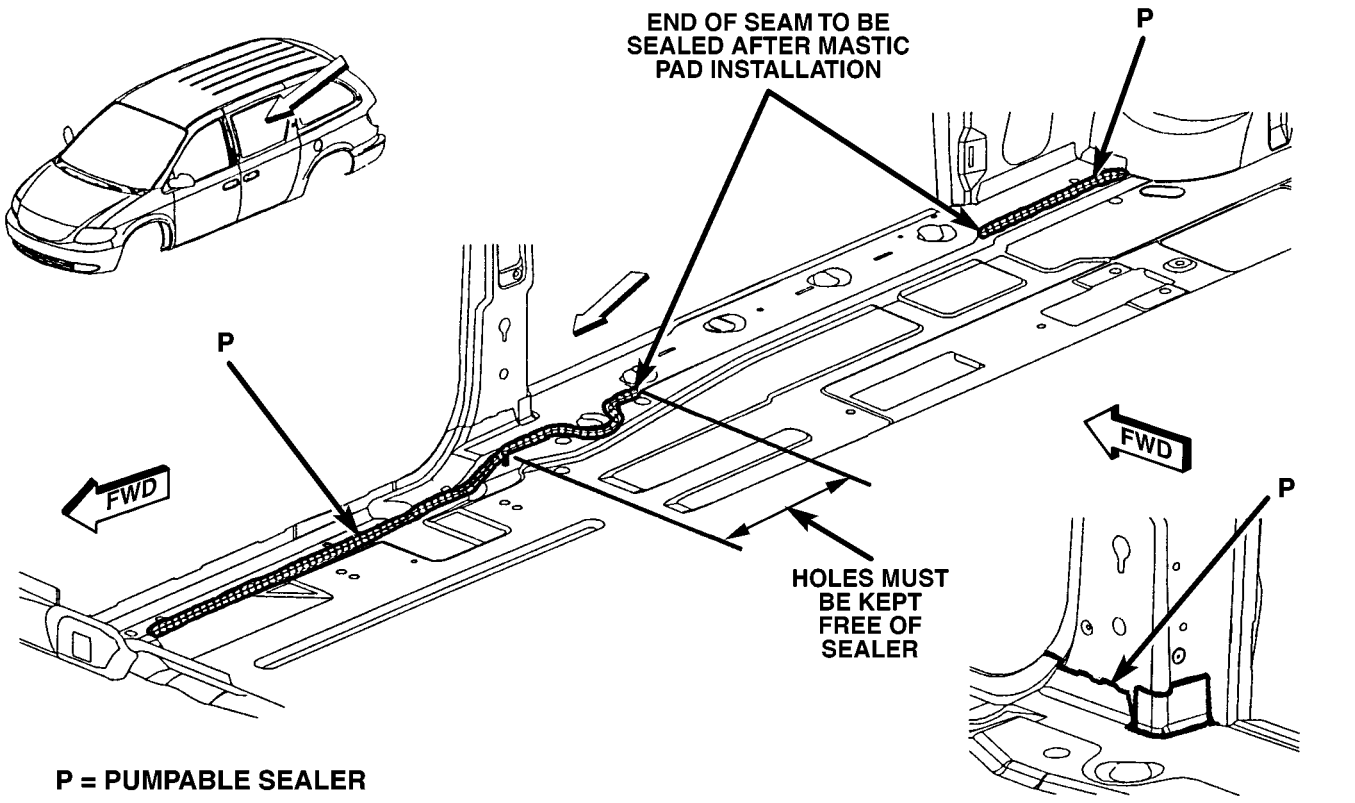

Fig. 34 FLOOR PAN SEAMS - LEFT AND RIGHT SIDES

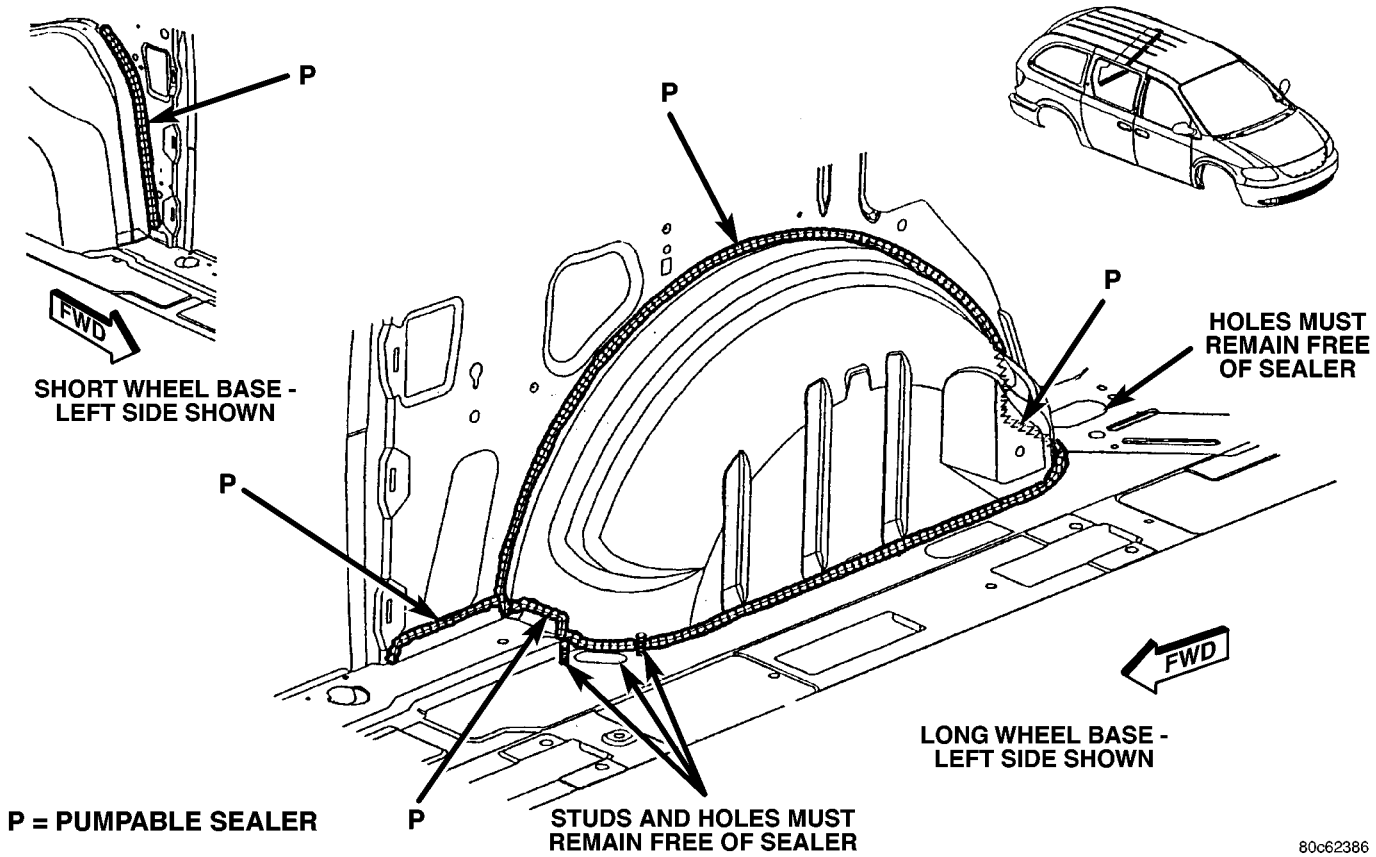

Fig. 35 FLOOR PAN & REAR WHEELHOUSE AREA - LEFT AND RIGHT SIDES

SEALER LOCATIONS (Continued)

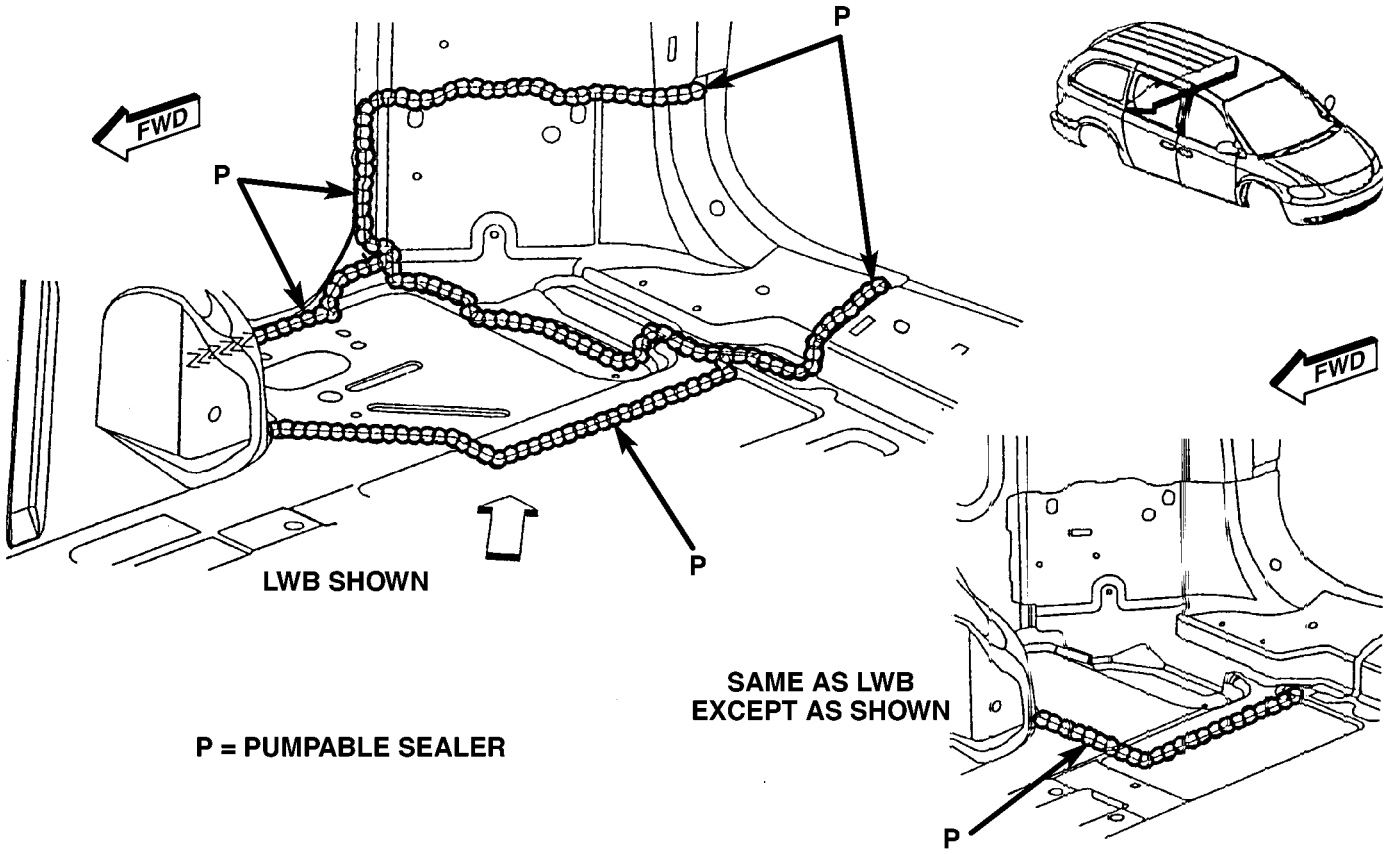

Fig. 36 FLOOR PAN SILL & D-PILLAR SEAMS - LEFT AND RIGHT SIDES

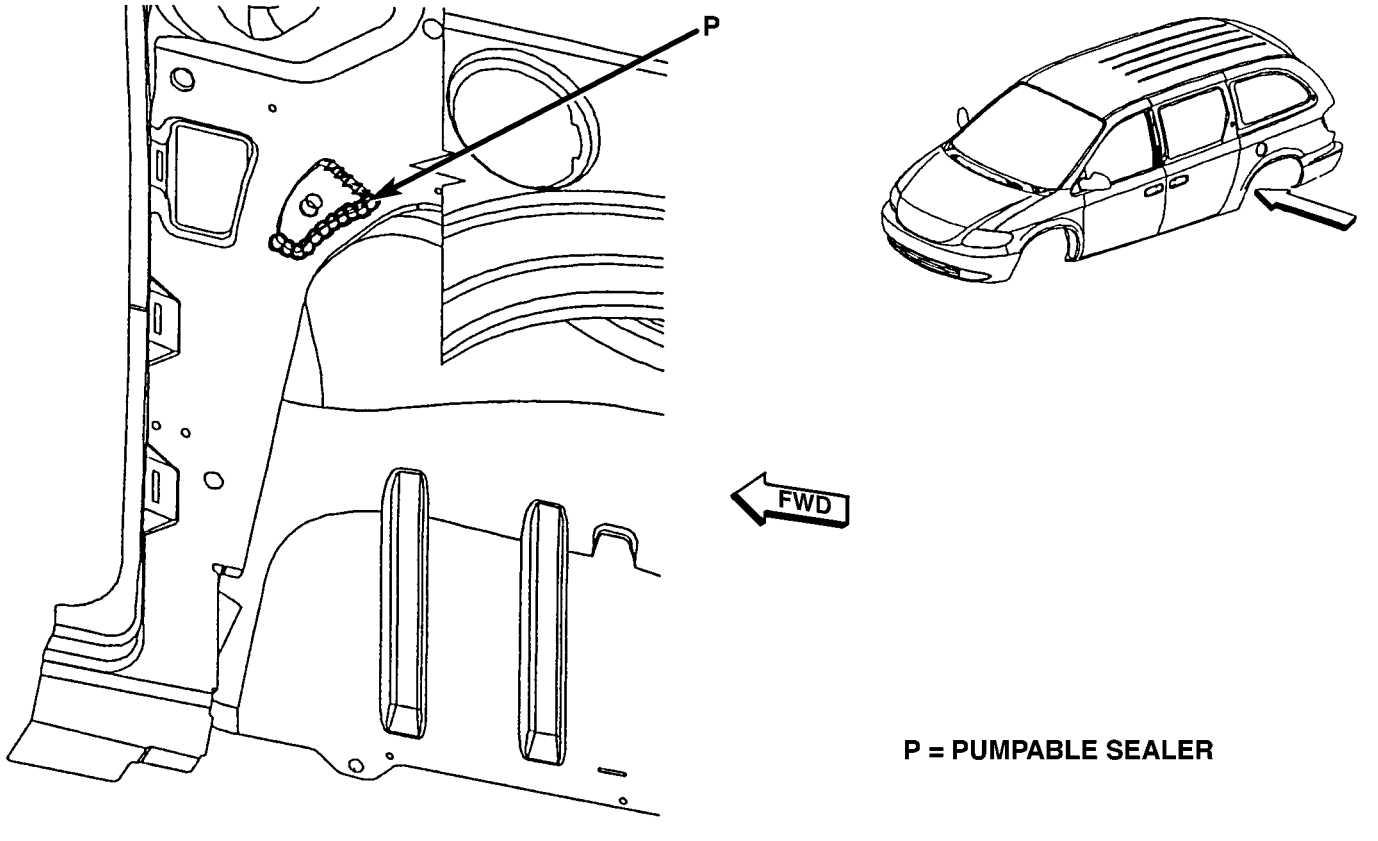

Fig. 37 LEFT SIDE SEAT ANCHOR REINFORCEMENT - SHORT WHEEL BASE ONLY

SEALER LOCATIONS (Continued)

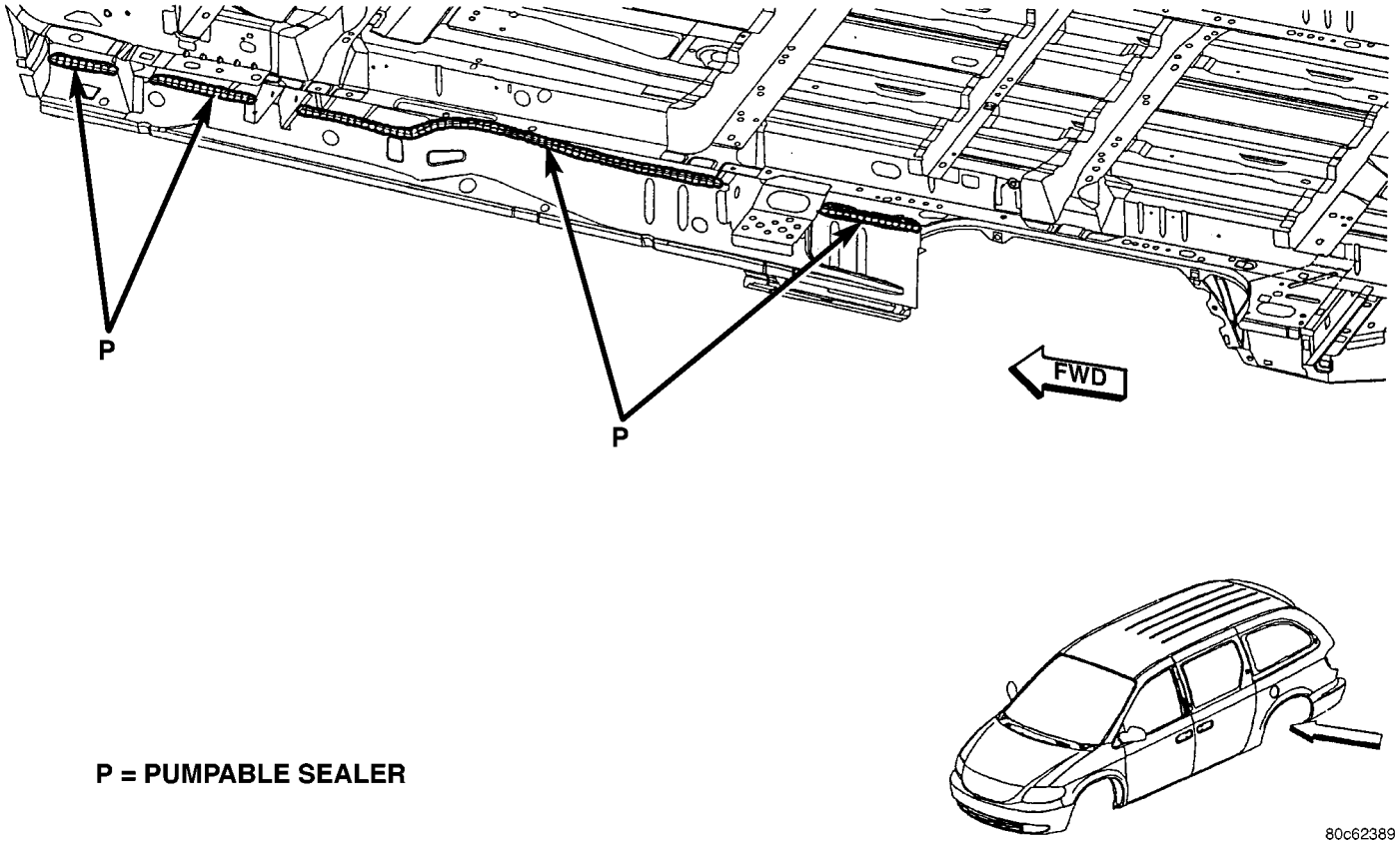

Fig. 38 UNDERBODY - LEFT AND RIGHT SIDES

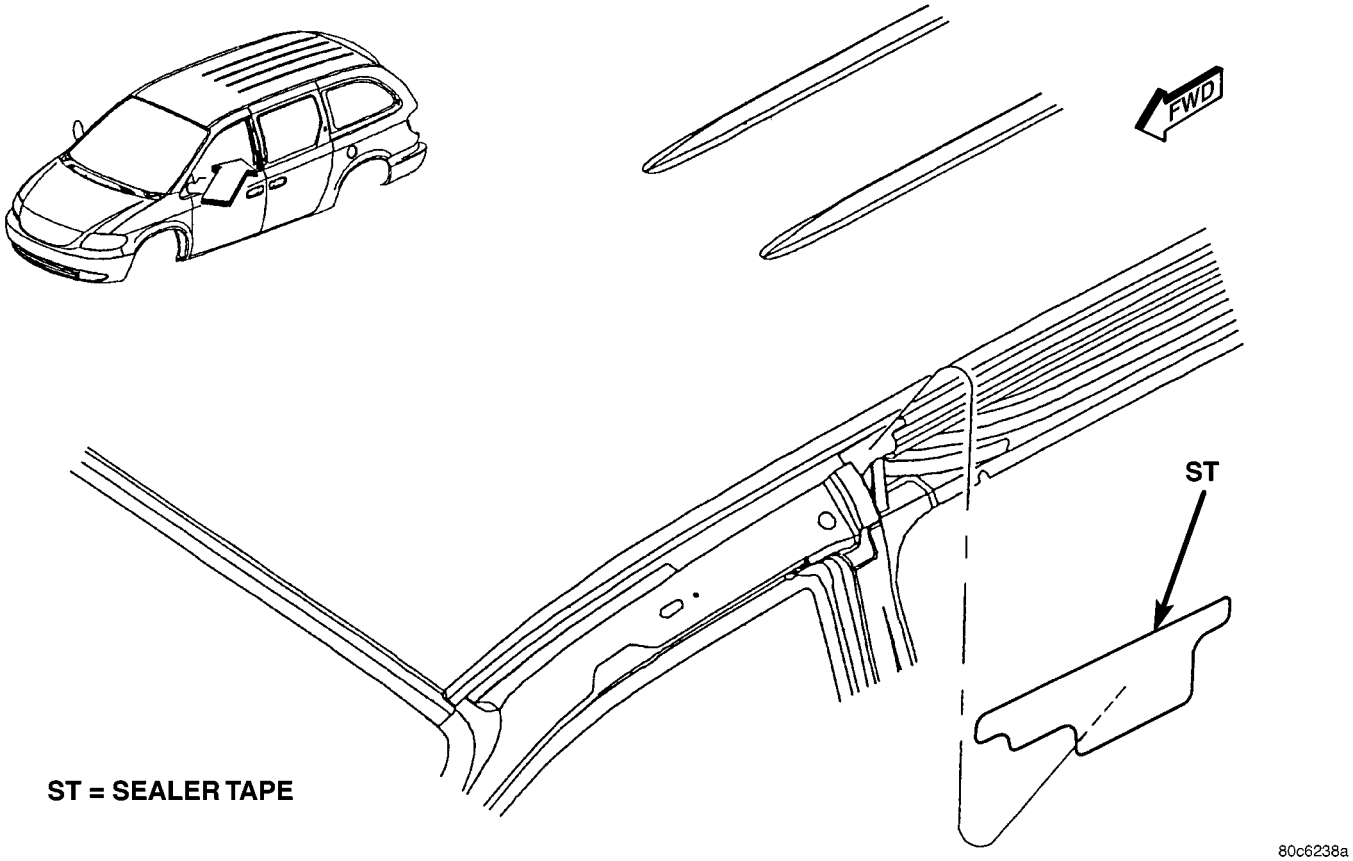

Fig. 39 ROOF TOP JOINT & UPPER FRONT SLIDING DOOR - LEFT AND RIGHT SIDES

SEALER LOCATIONS (Continued)

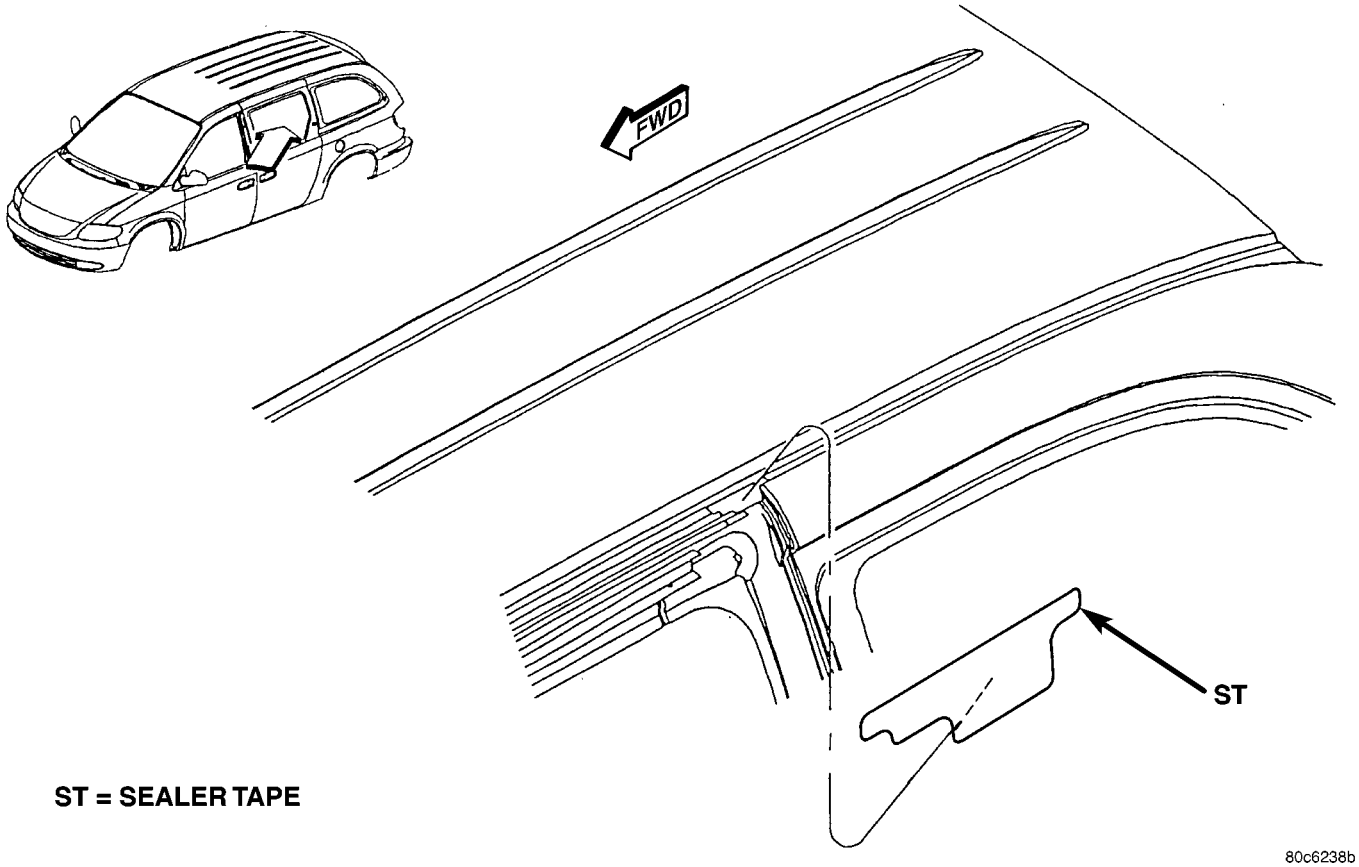

Fig. 40 ROOF TOP JOINT & UPPER REAR SLIDING DOOR - LEFT AND RIGHT SIDES

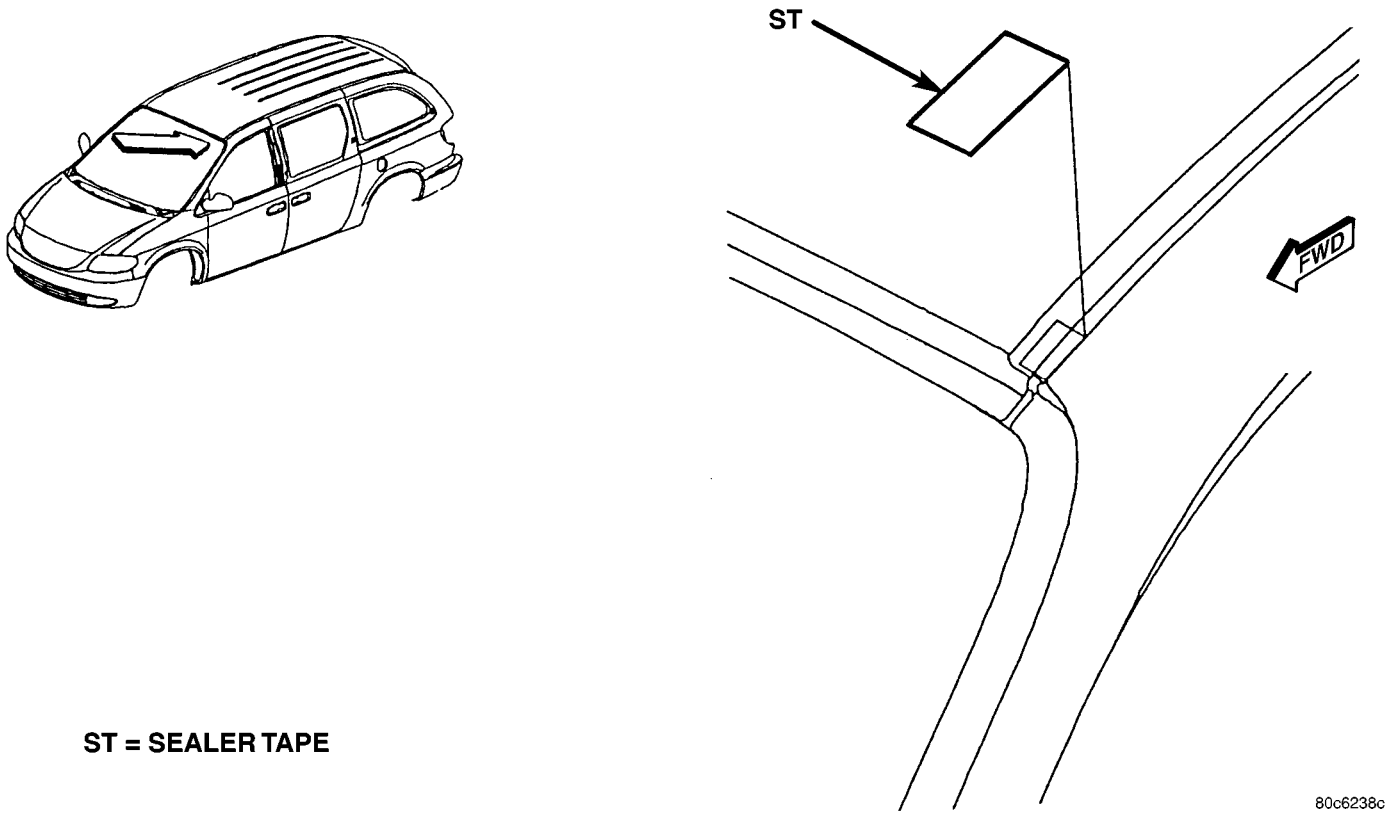

Fig. 41 ROOF TOP JOINT & WINDSHIELD OPENING - LEFT AND RIGHT SIDES

SEALER LOCATIONS (Continued)

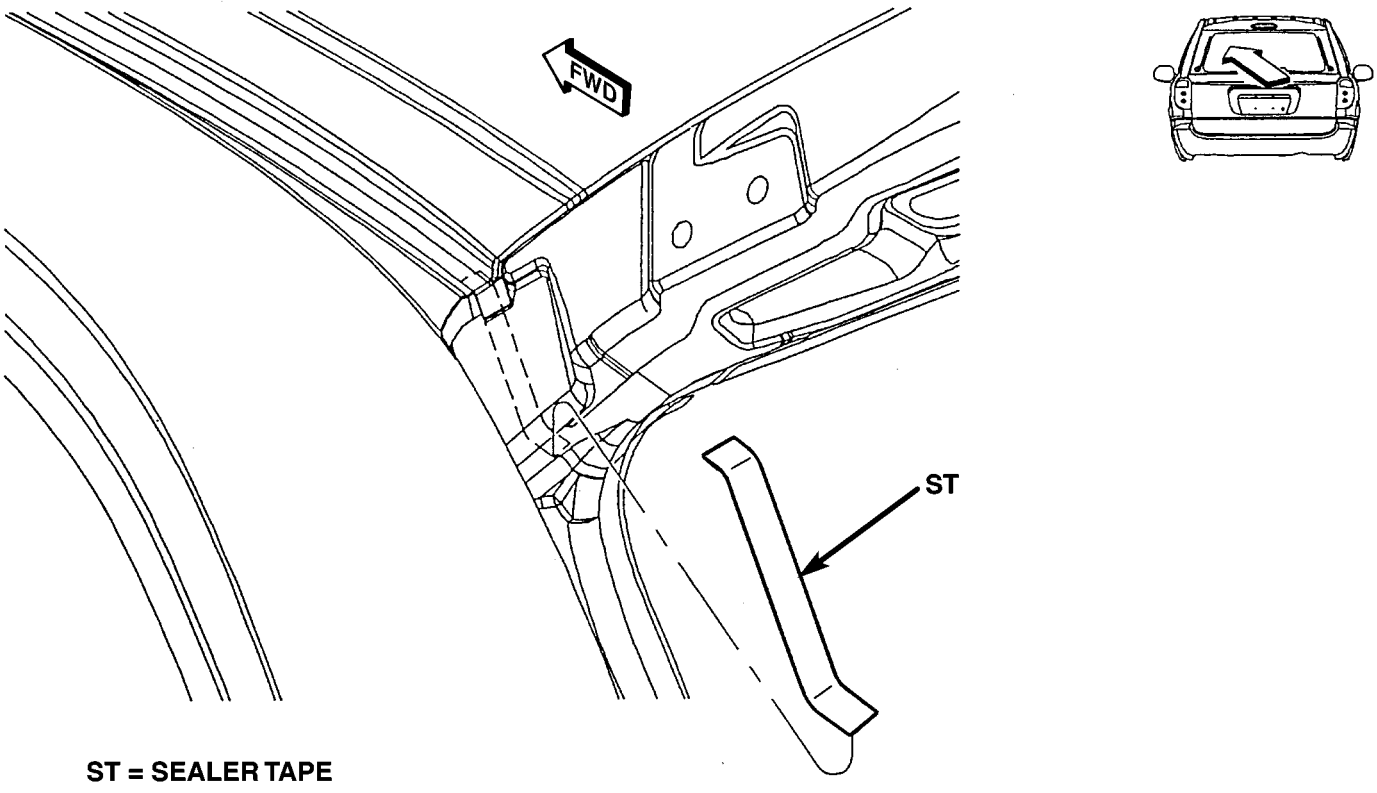

Fig. 42 LIFT GATE ROOF COACH JOINT - LEFT AND RIGHT SIDES

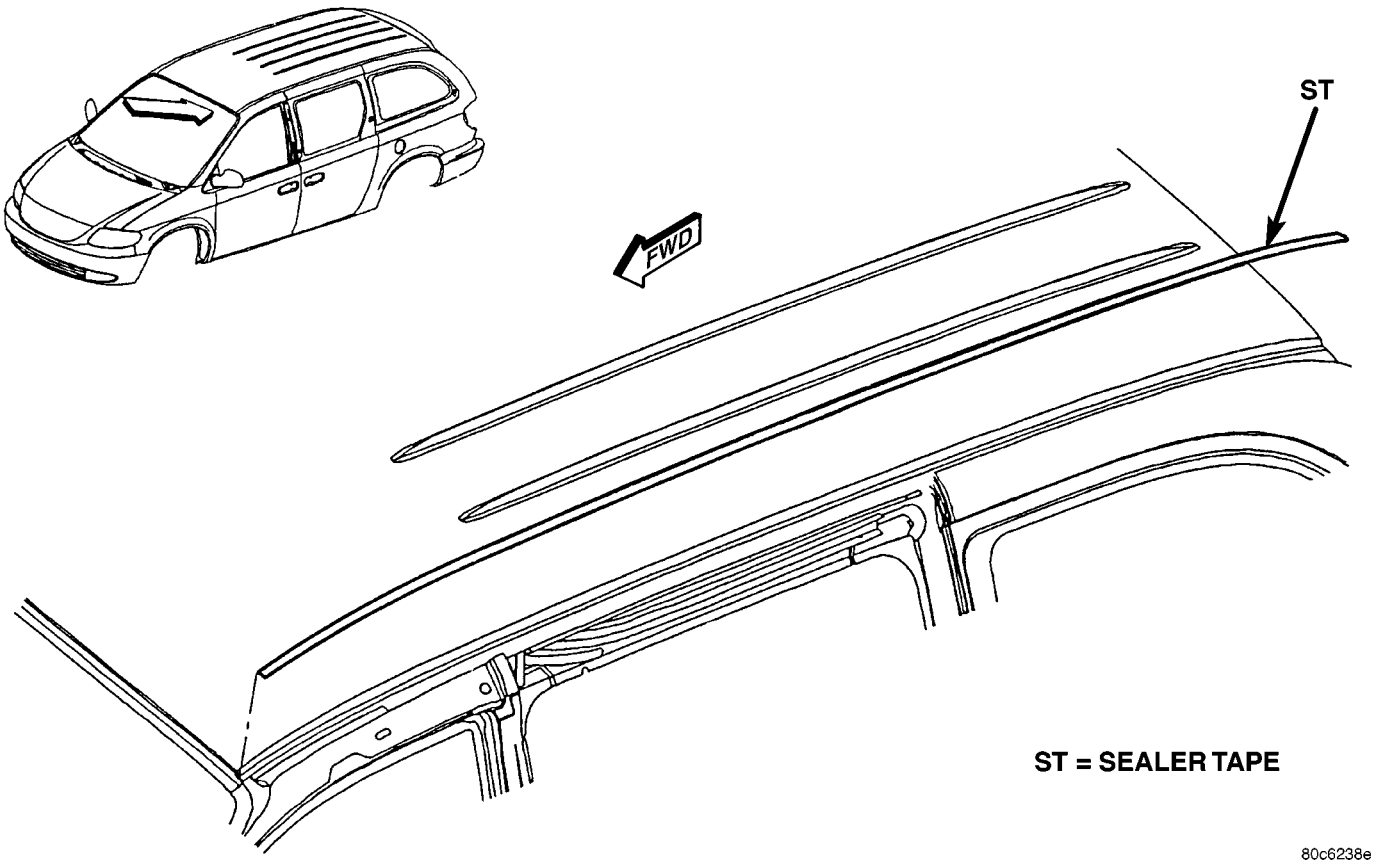

Fig. 43 ROOF RAP JOINT - LEFT AND RIGHT SIDES

SEALER LOCATIONS (Continued)

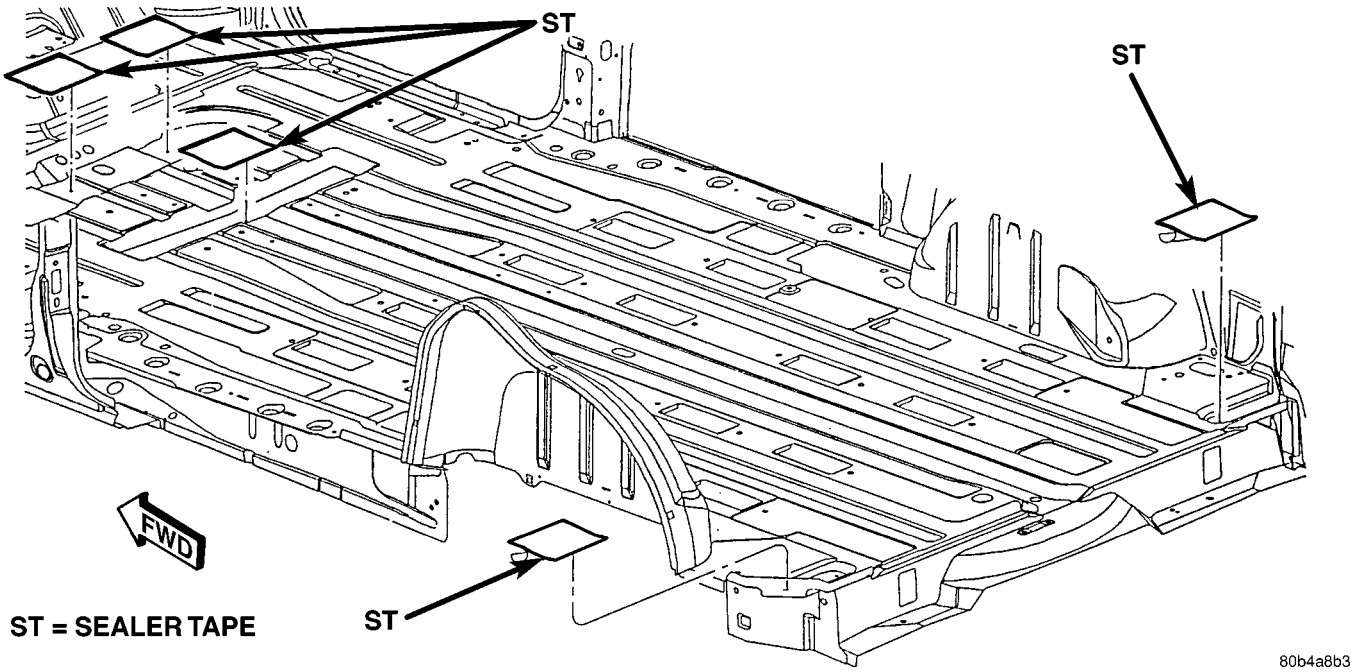

Fig. 44 DRAIN HOLE PATCHES

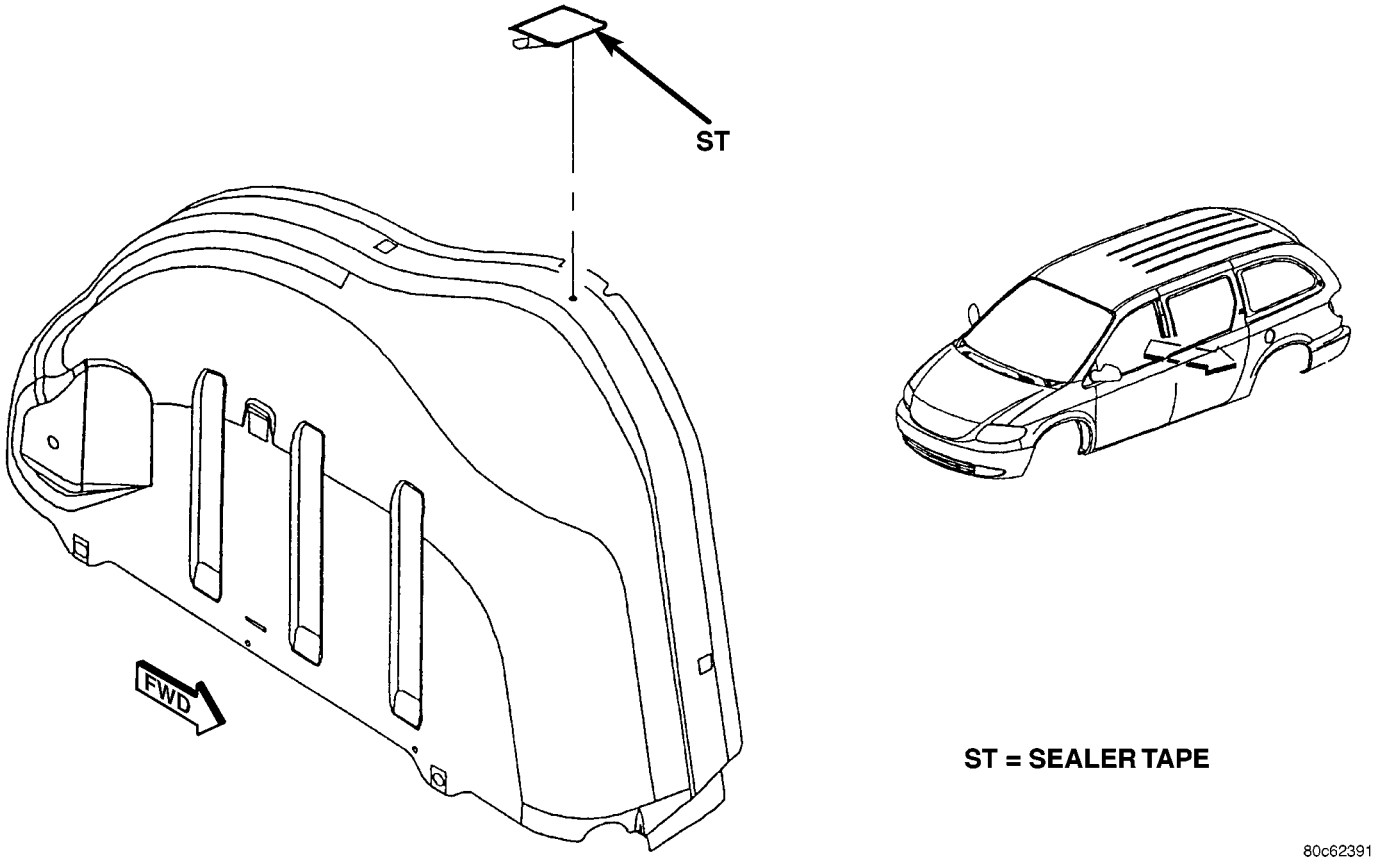

Fig. 45 WHEELHOUSE VENT HOLE - LEFT SIDE SHOWN - RIGHT SIDE TYPICAL

SEALER LOCATIONS (Continued)

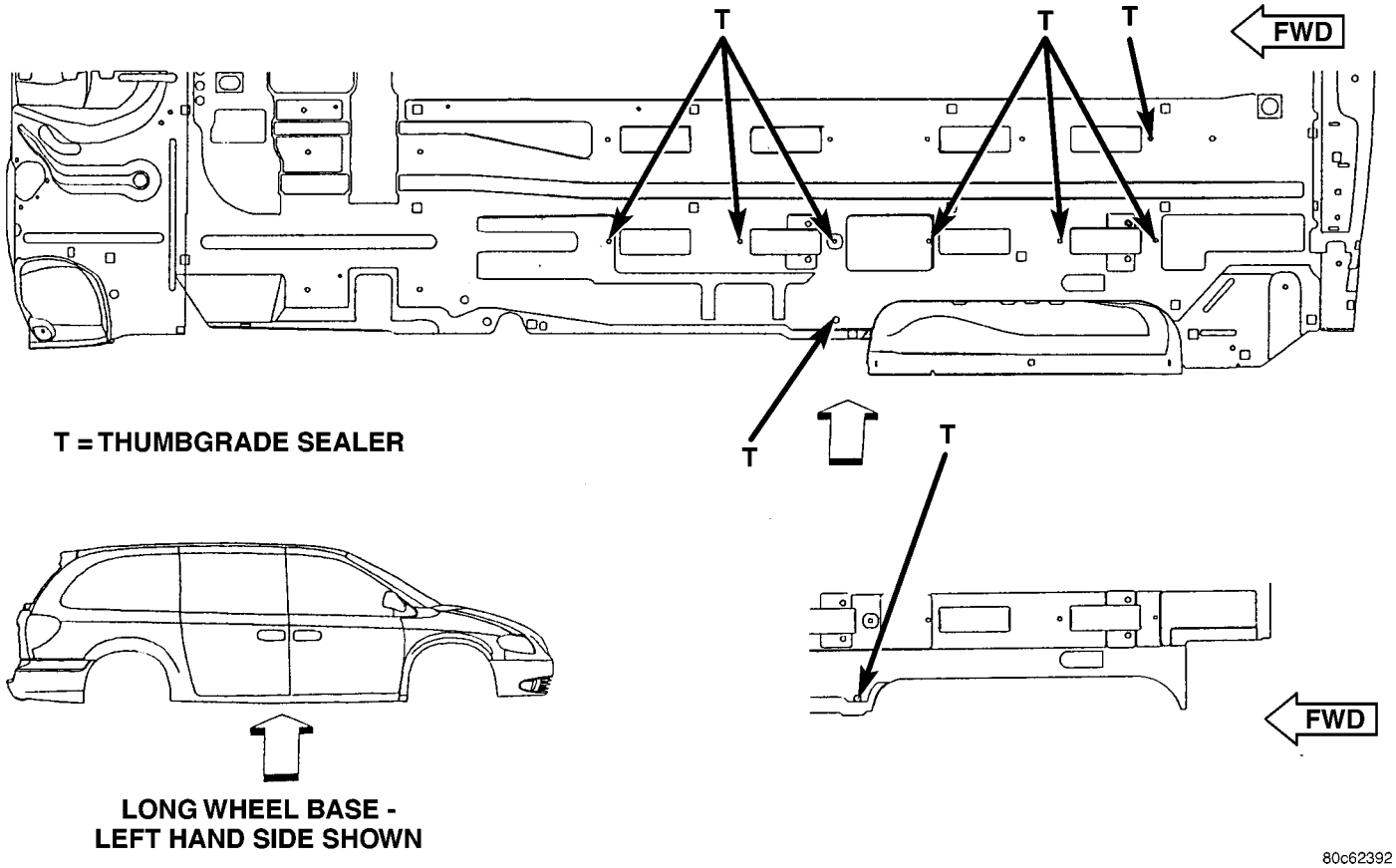

Fig. 46 FLOOR PAN HOLES - LEFT AND RIDE SIDES

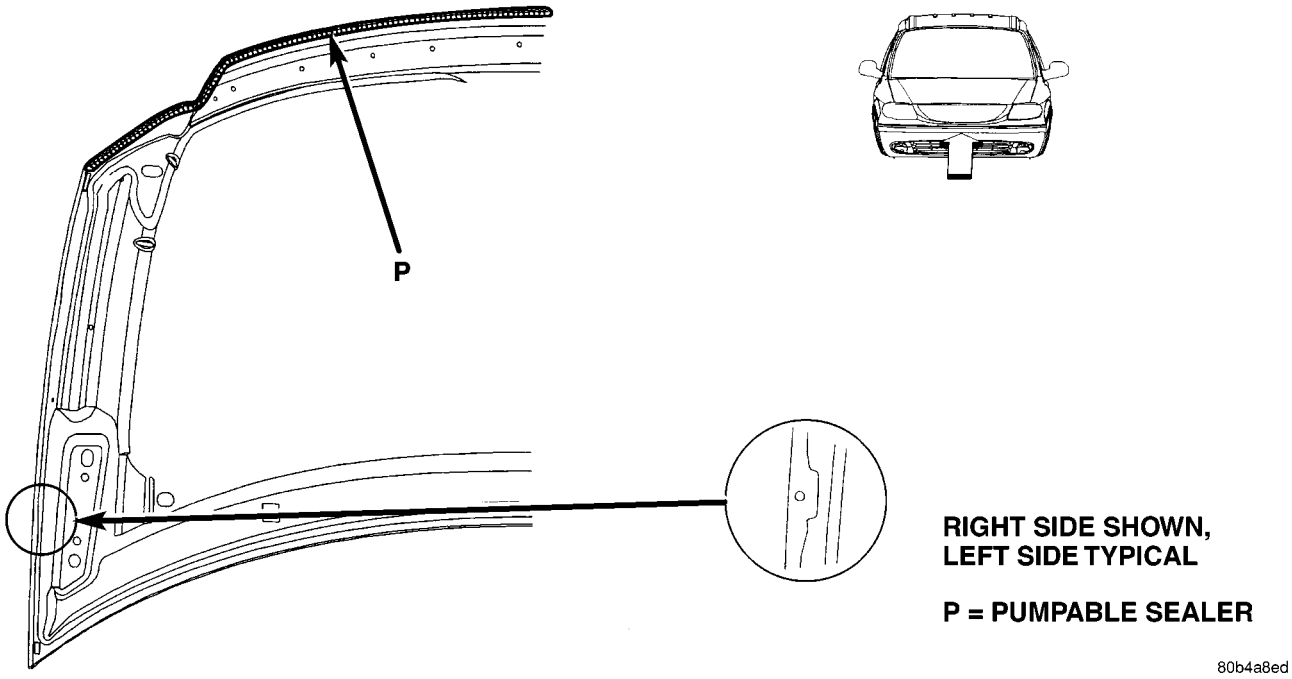

Fig. 47 HOOD FRONT HEM FLANGE & SIDES

SEALER LOCATIONS (Continued)

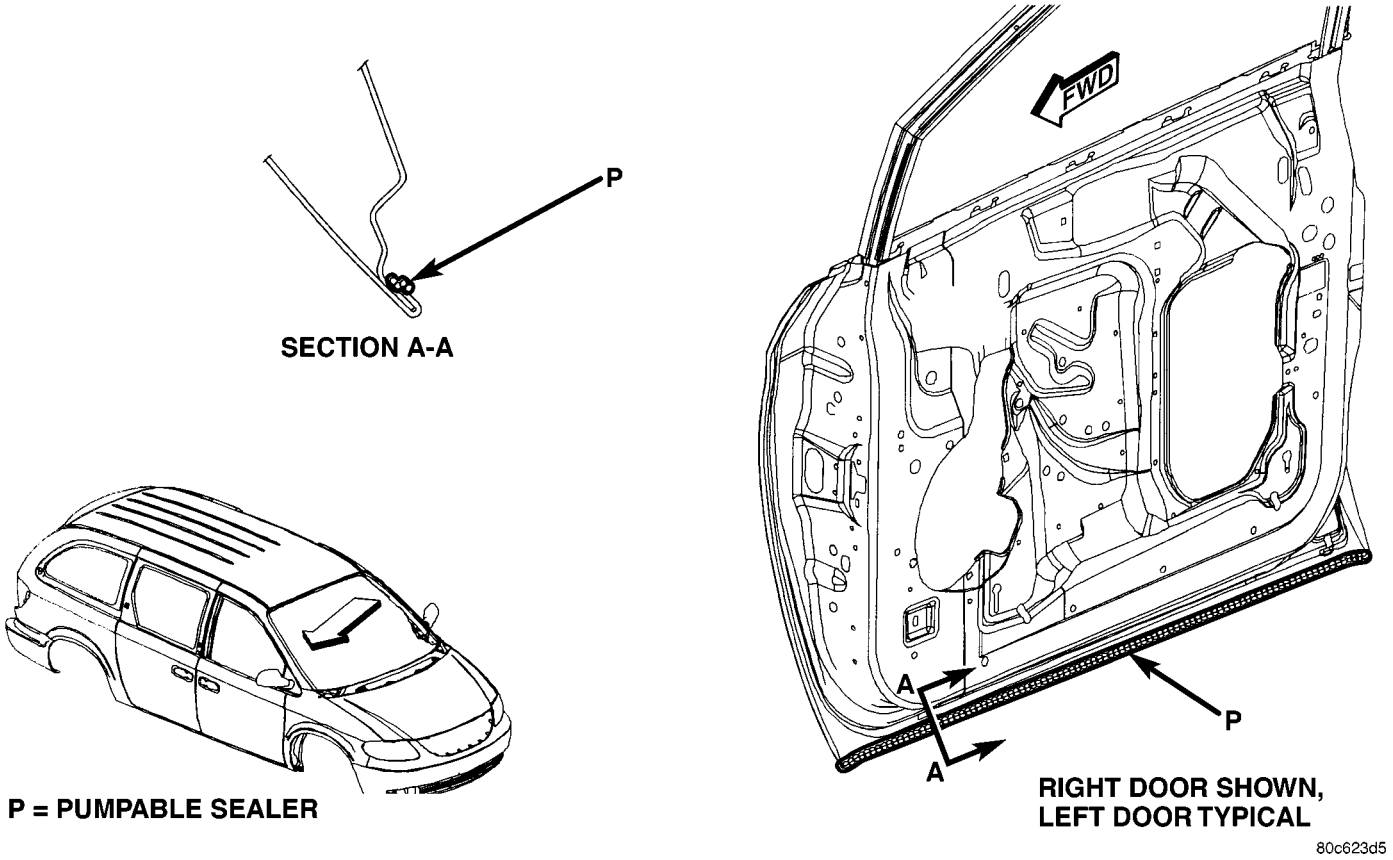

Fig. 48 FRONT DOOR LOWER FLANGE

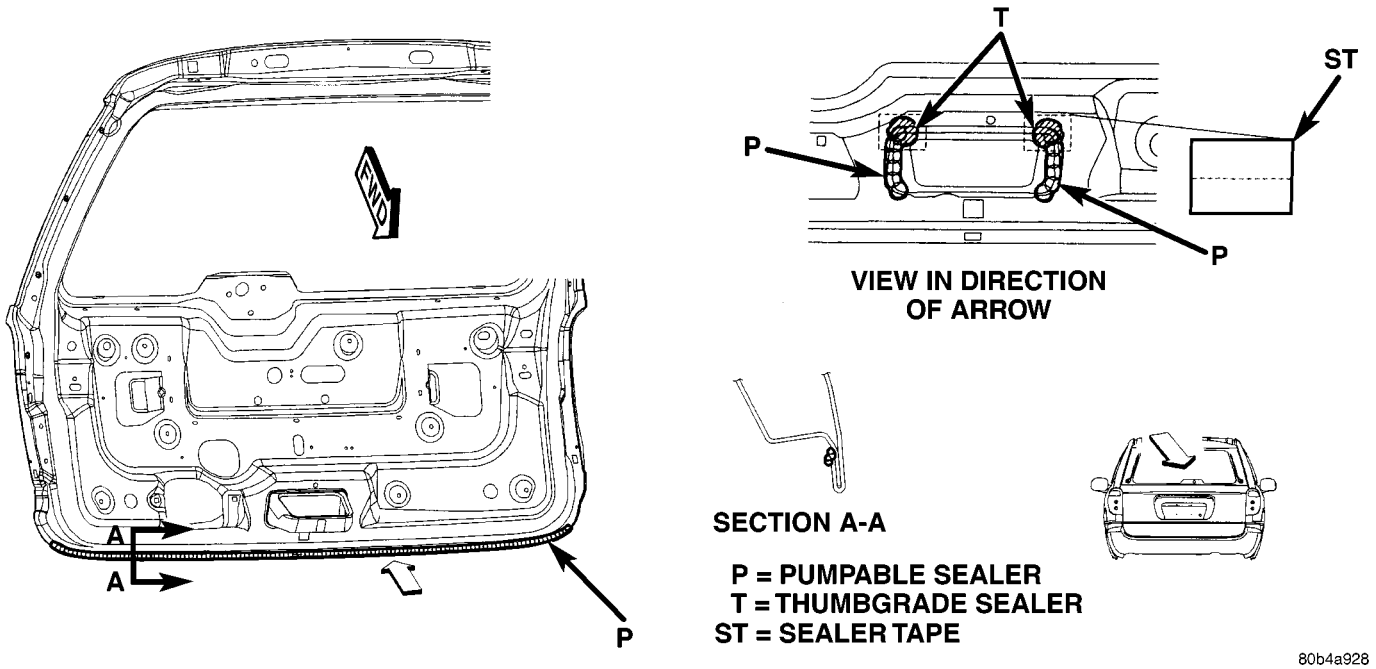

Fig. 49 LIFTGATE HEM FLANGE AND LATCH COVER SEAMS

SEALER LOCATIONS (Continued)

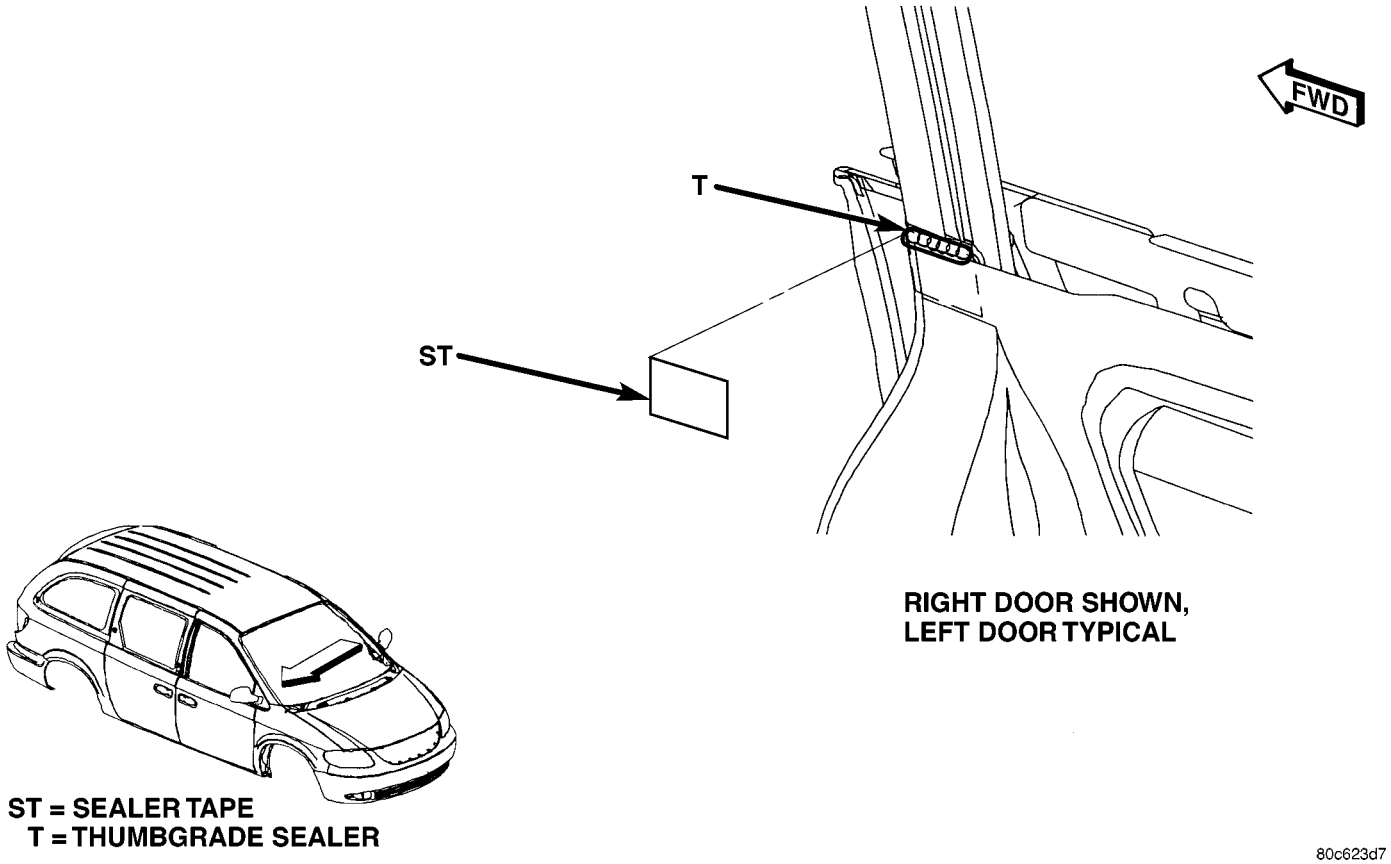

Fig. 50 FRONT DOOR BELT DOOR BELT SEAMS (FRONT)

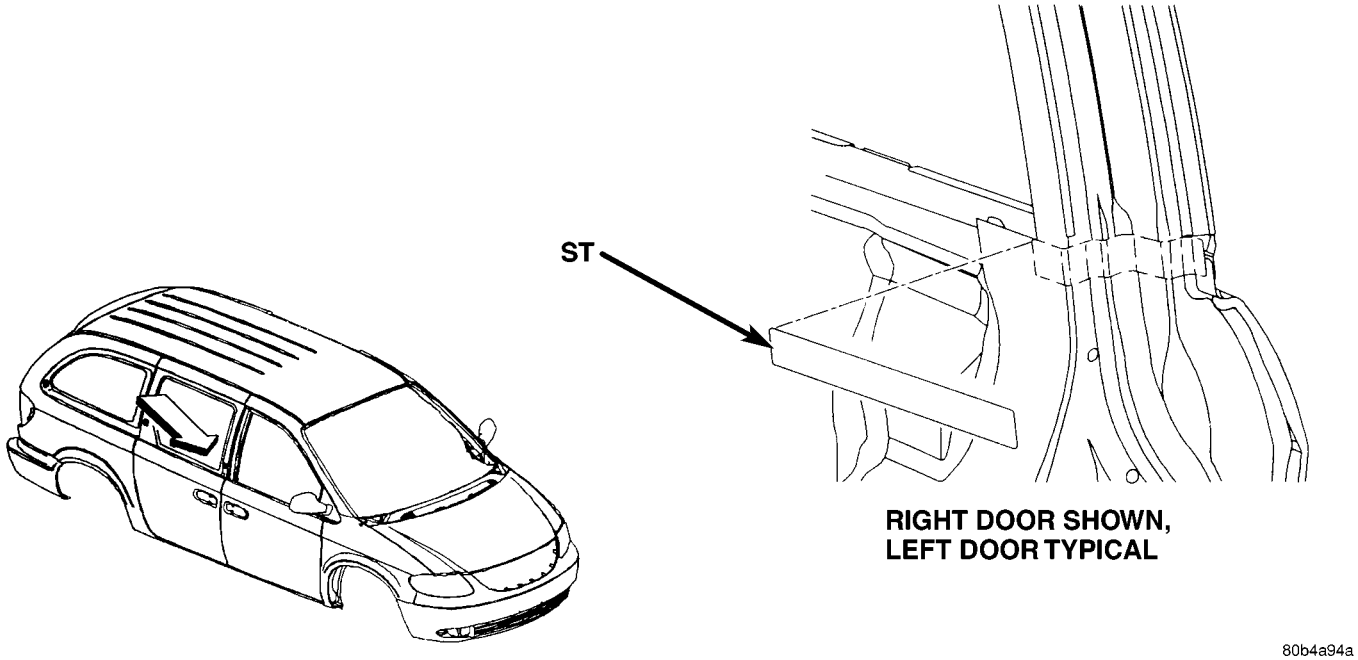

Fig. 51 FRONT DOOR BELT DOOR BELT SEAMS (REAR)

SEALER LOCATIONS (Continued)

SPECIFICATIONS - BODY SEALING LOCATIONS - FOLD-IN-FLOOR ONLY

INDEX

DESCRIPTION	FIGURE
FLOOR PAN SEAMS	52
CENTER FLOOR PAN ENDS	53
REAR SEAT FLOOR PAN ENDS	54
REAR TUB FRONT SEAMS	55
LEFT REAR WHEELHOUSE SEAM - FLOOR PAN	56
RIGHT REAR WHEELHOUSE SEAM - FLOOR PAN	57
REAR D-PILLAR PANEL AND FRAME	58
UNDERBODY	59
FLOOR PAN SEALER PATCHES	60
TOE PAN PLASTIC PLUG	61
UNDERBODY PLASTIC PLUGS (1 OF 2)	62
UNDERBODY PLASTIC PLUGS (2 OF 2)	63
REAR WHEELHOUSE PLASTIC PLUG	64

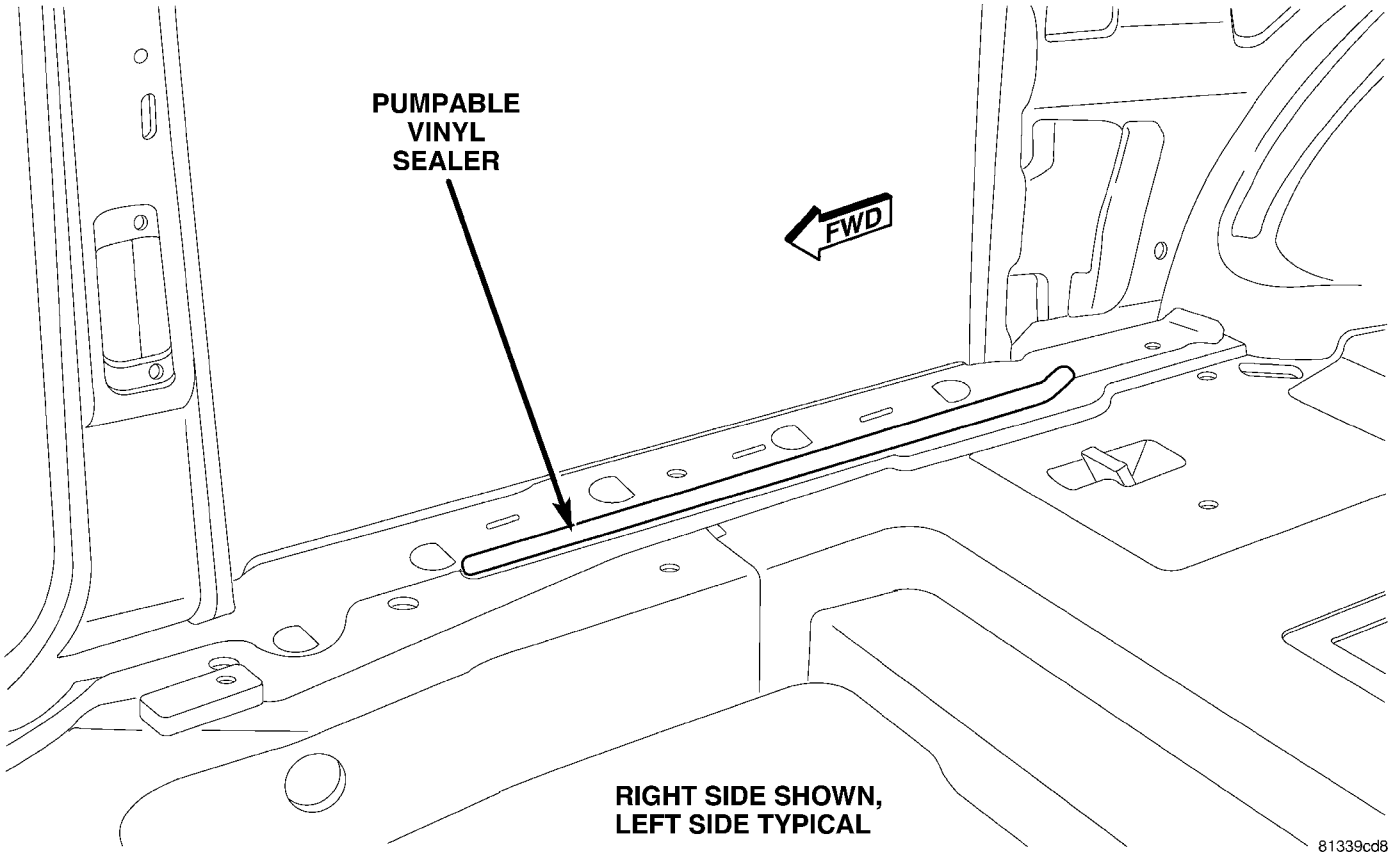

Fig. 52 FLOOR PAN SEAMS

SEALER LOCATIONS (Continued)

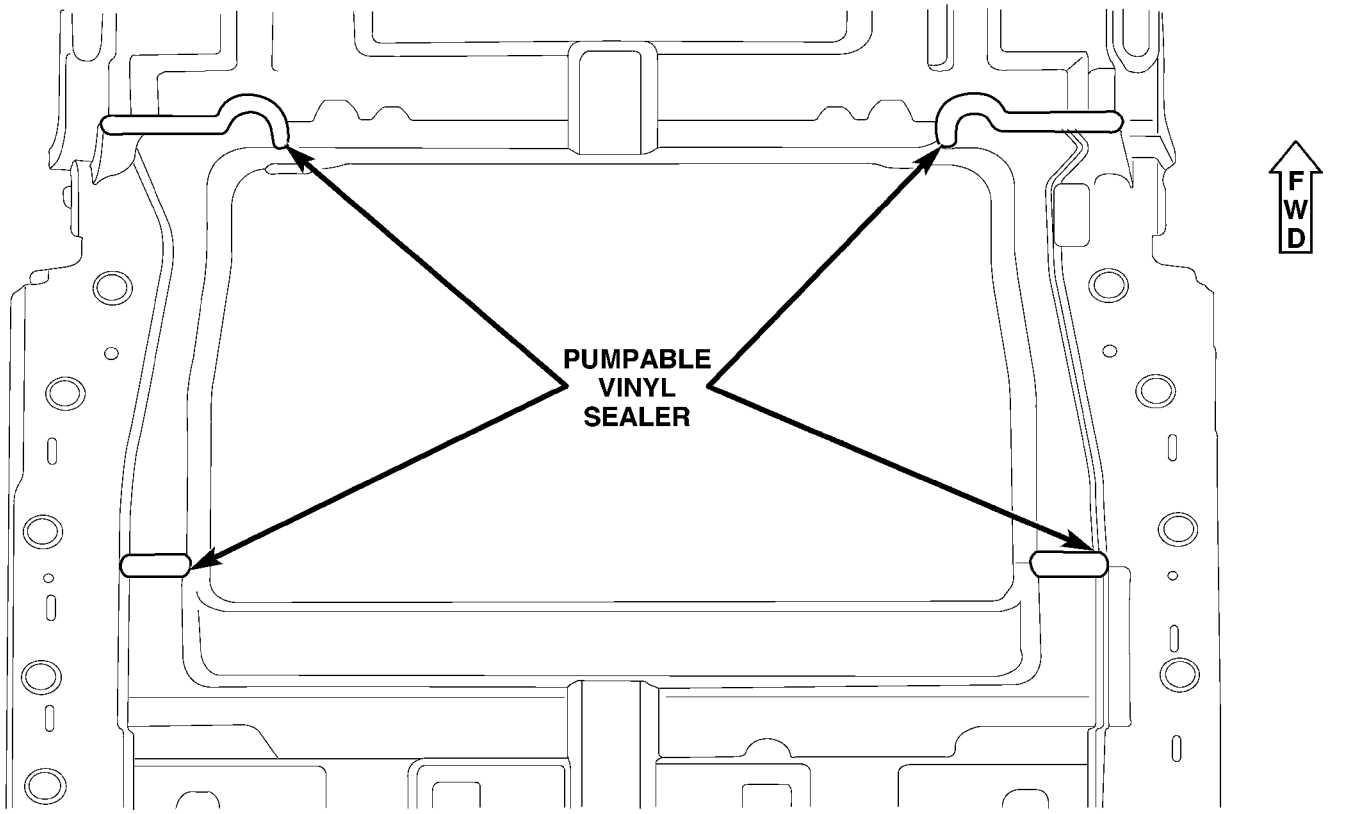

Fig. 53 CENTER FLOOR PAN ENDS

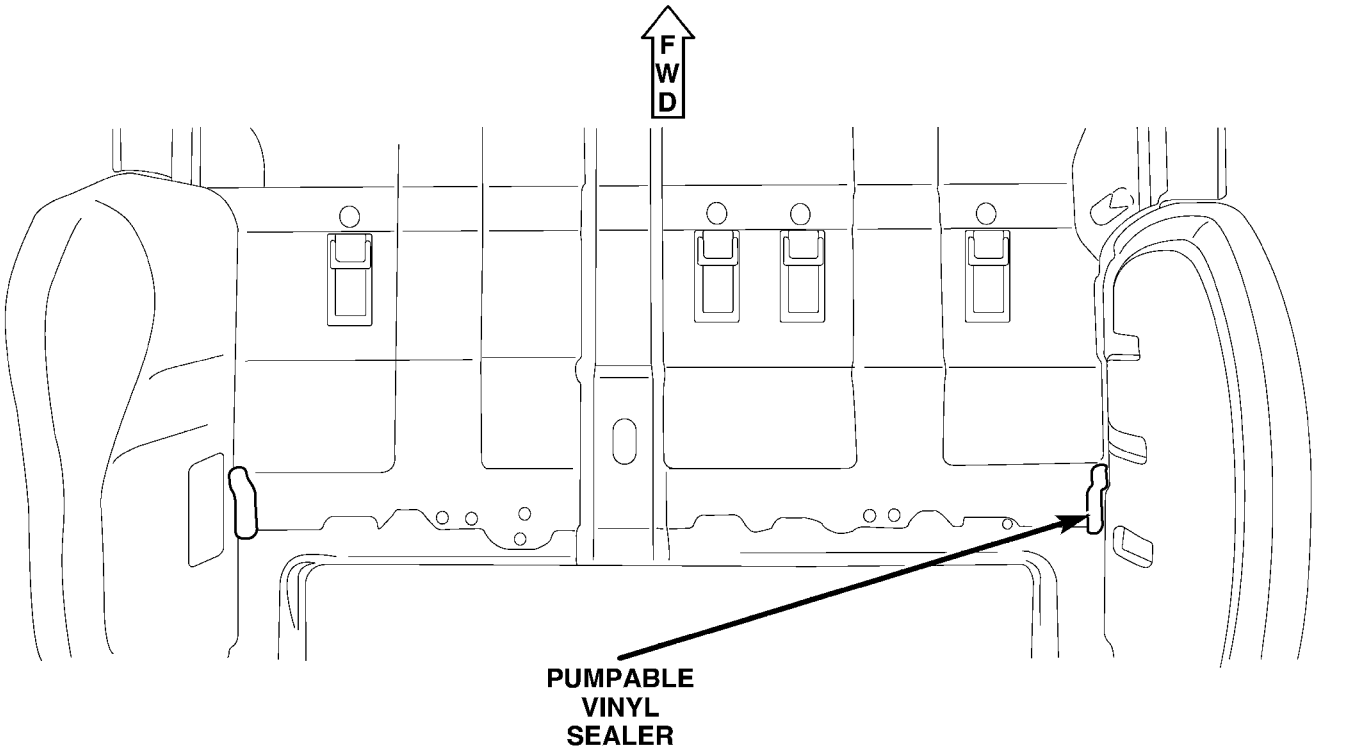

Fig. 54 REAR SEAT FLOOR PAN ENDS

SEALER LOCATIONS (Continued)

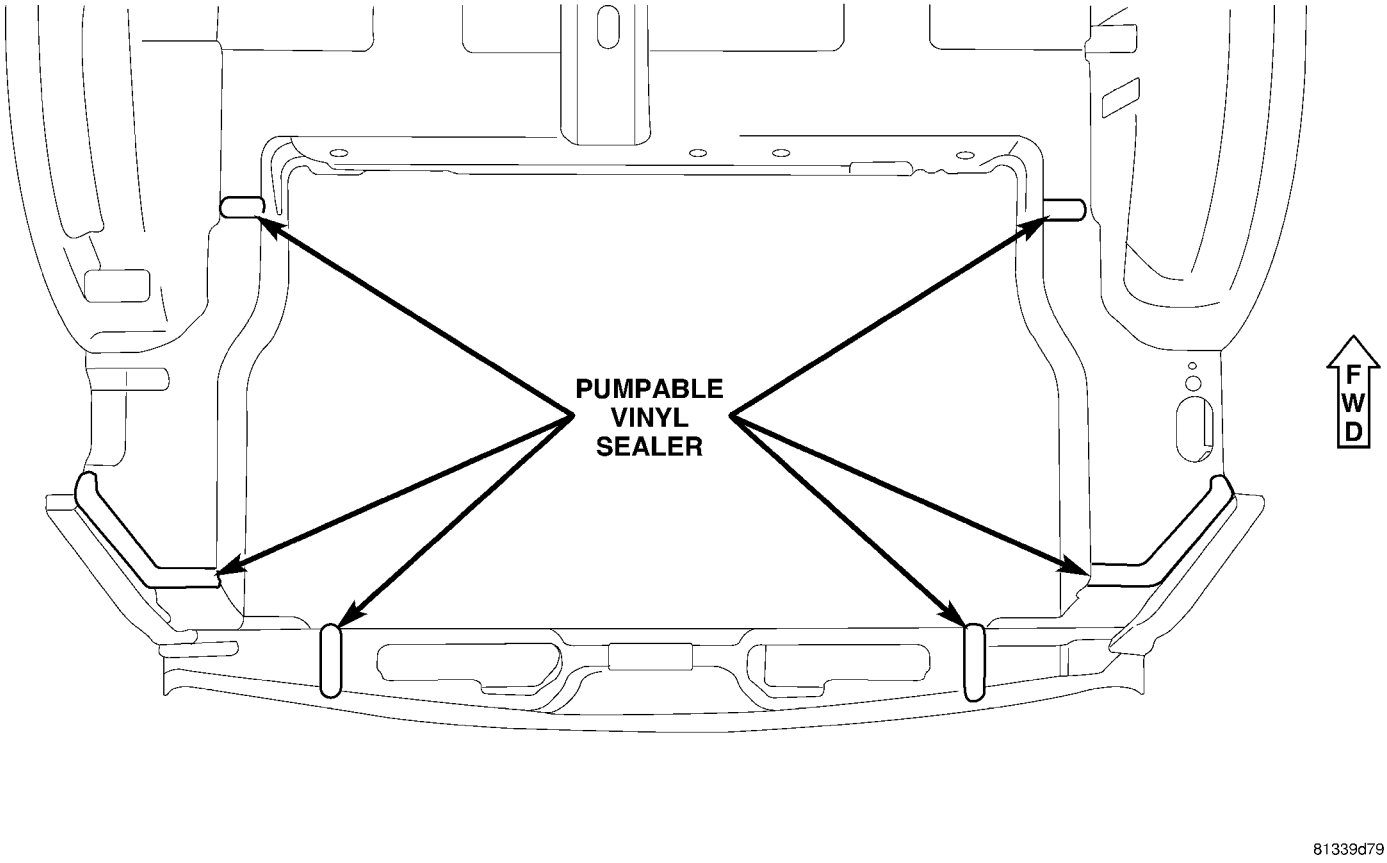

Fig. 55 REAR TUB FRONT SEAMS

SEALER LOCATIONS (Continued)

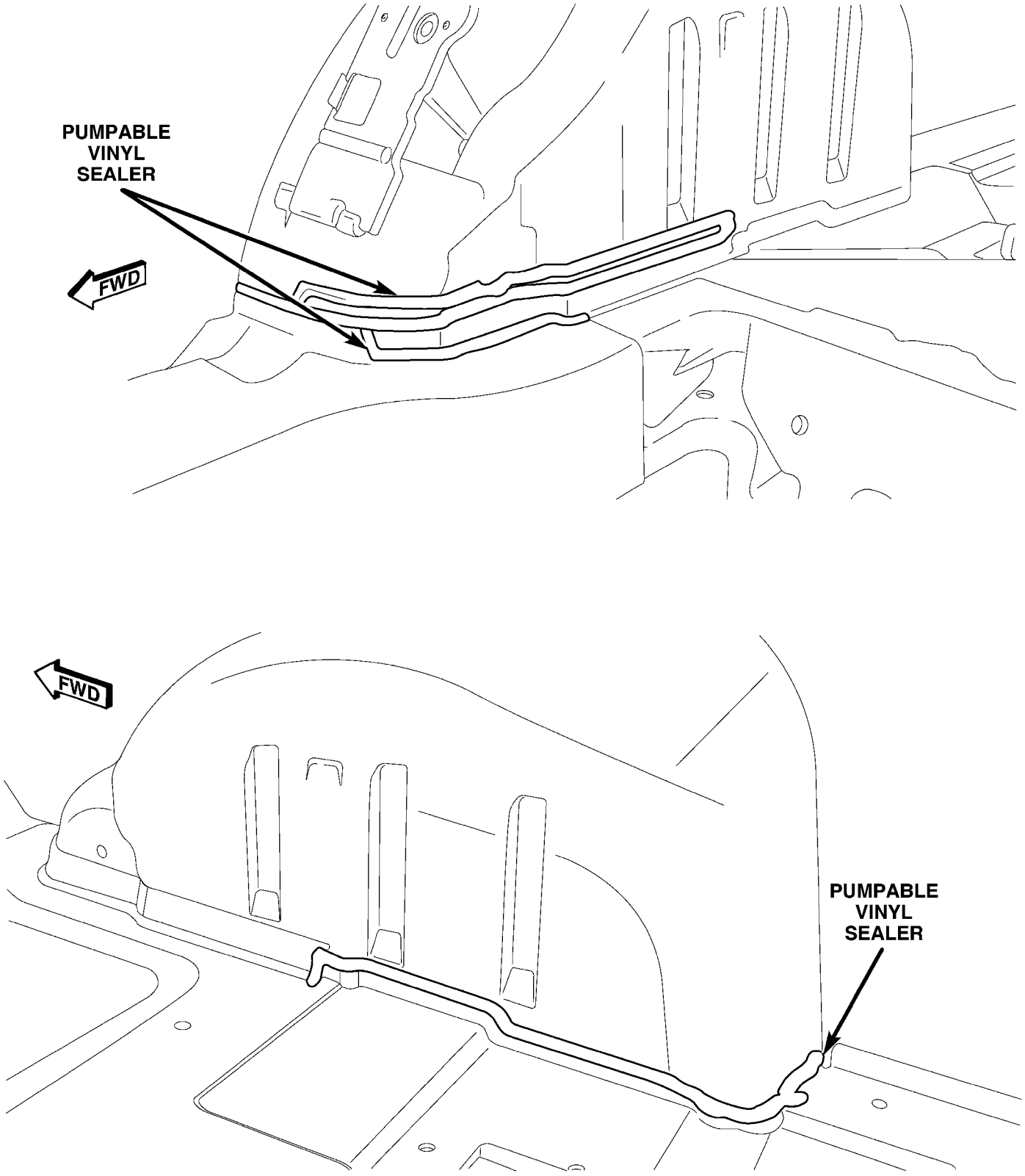

Fig. 56 LEFT REAR WHEELHOUSE SEAM - FLOOR PAN

SEALER LOCATIONS (Continued)

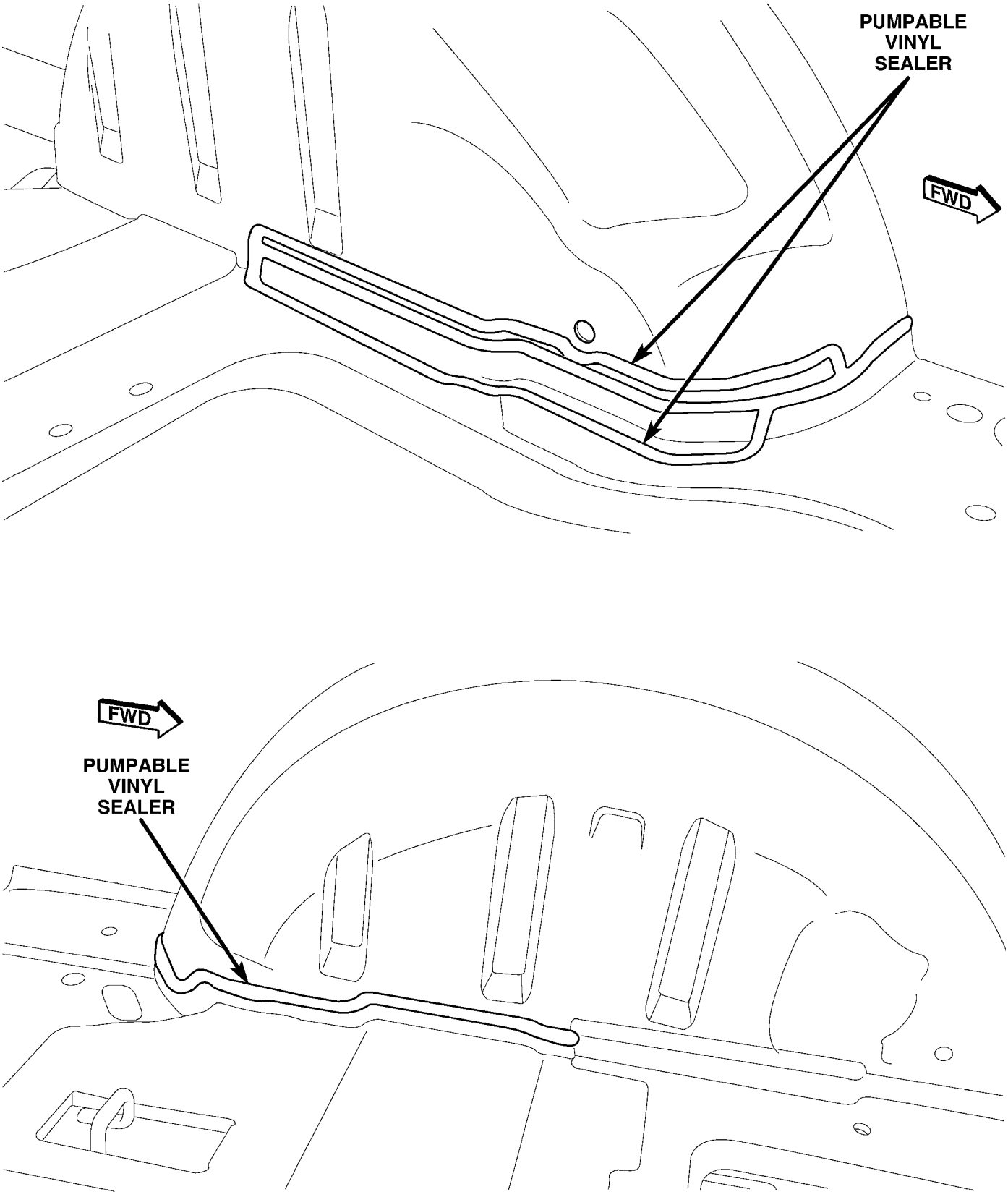

Fig. 57 RIGHT REAR WHEELHOUSE SEAM - FLOOR PAN

SEALER LOCATIONS (Continued)

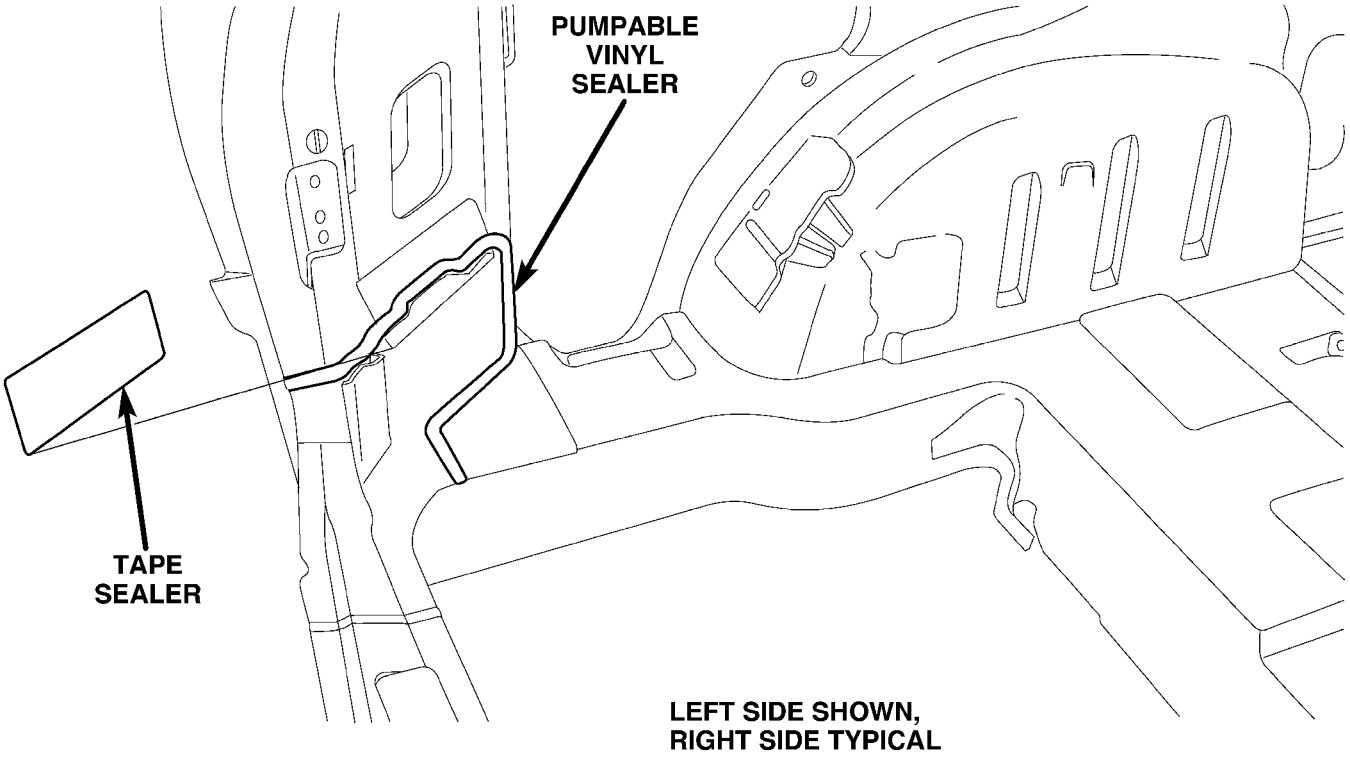

Fig. 58 REAR D-PILLAR PANEL AND FRAME

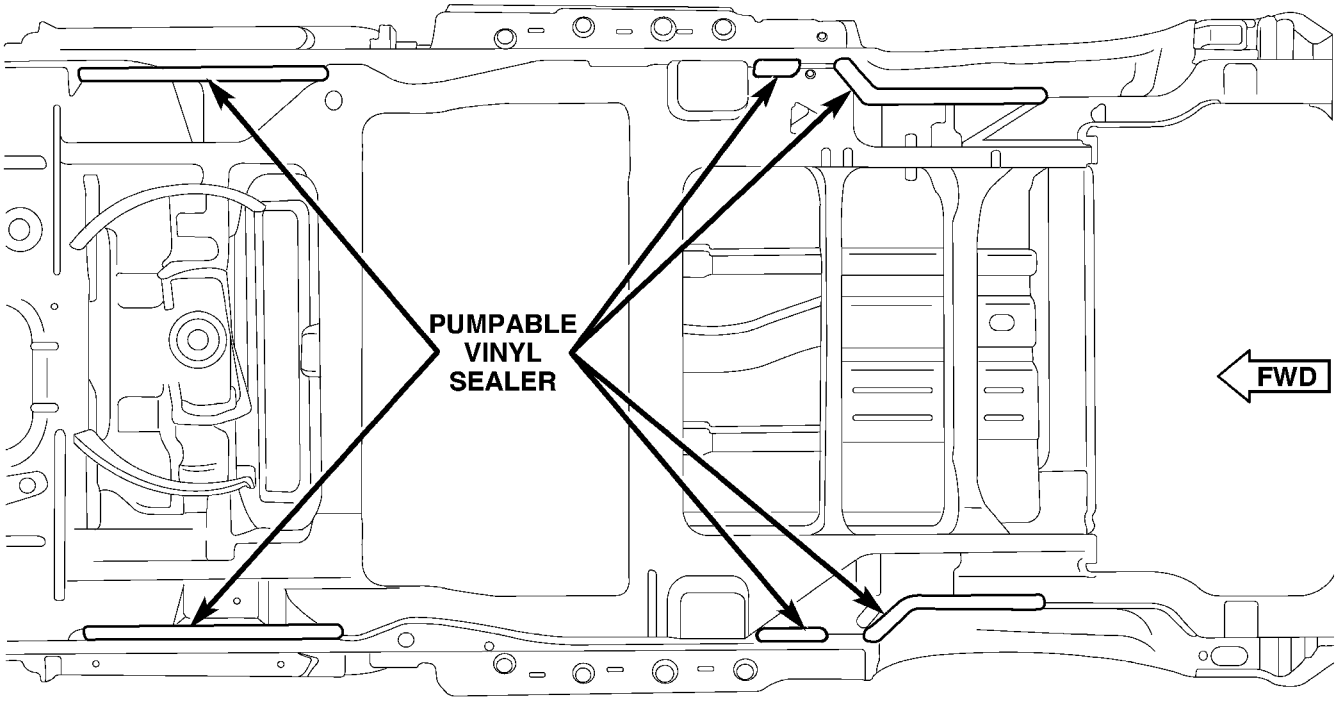

Fig. 59 UNDERBODY

SEALER LOCATIONS (Continued)

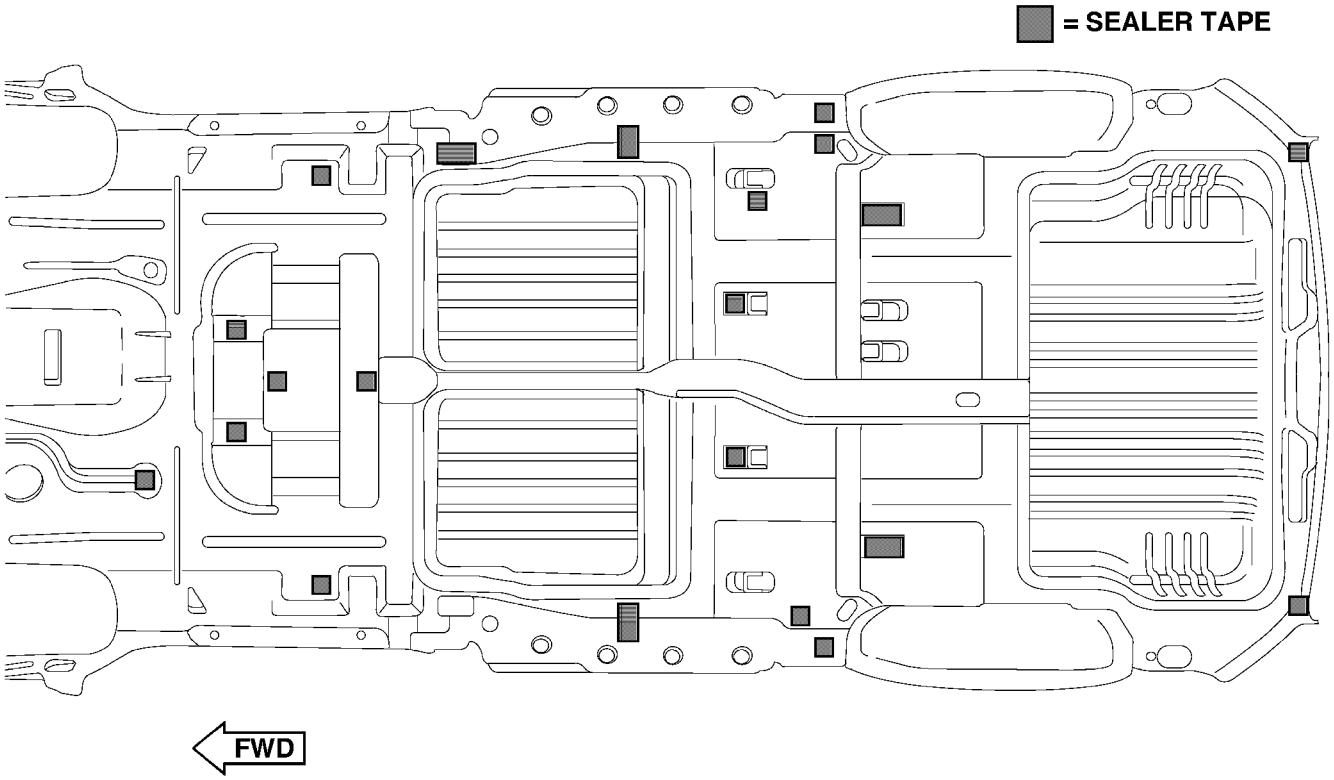

Fig. 60 FLOOR PAN SEALER PATCHES

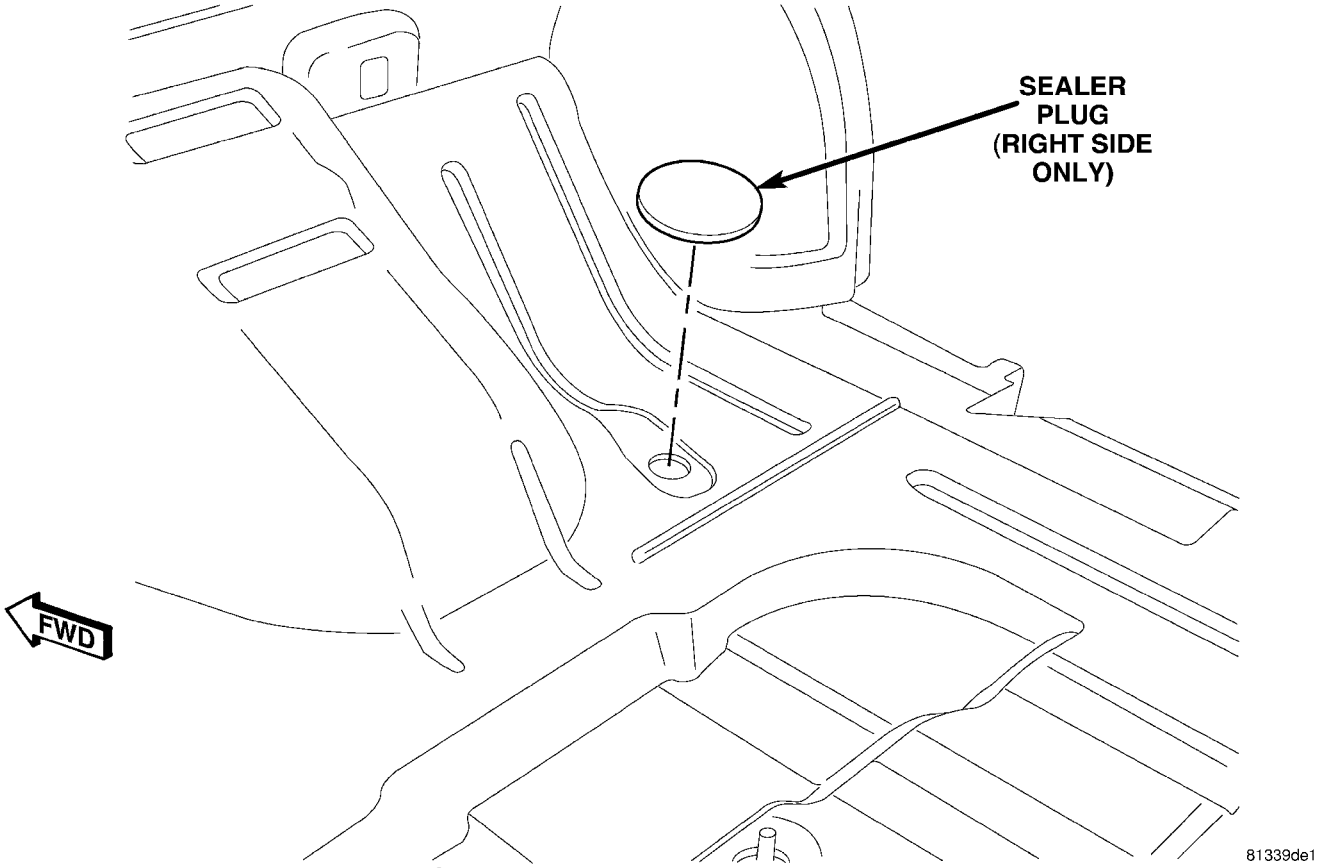

Fig. 61 TOE PAN PLASTIC PLUG

SEALER LOCATIONS (Continued)

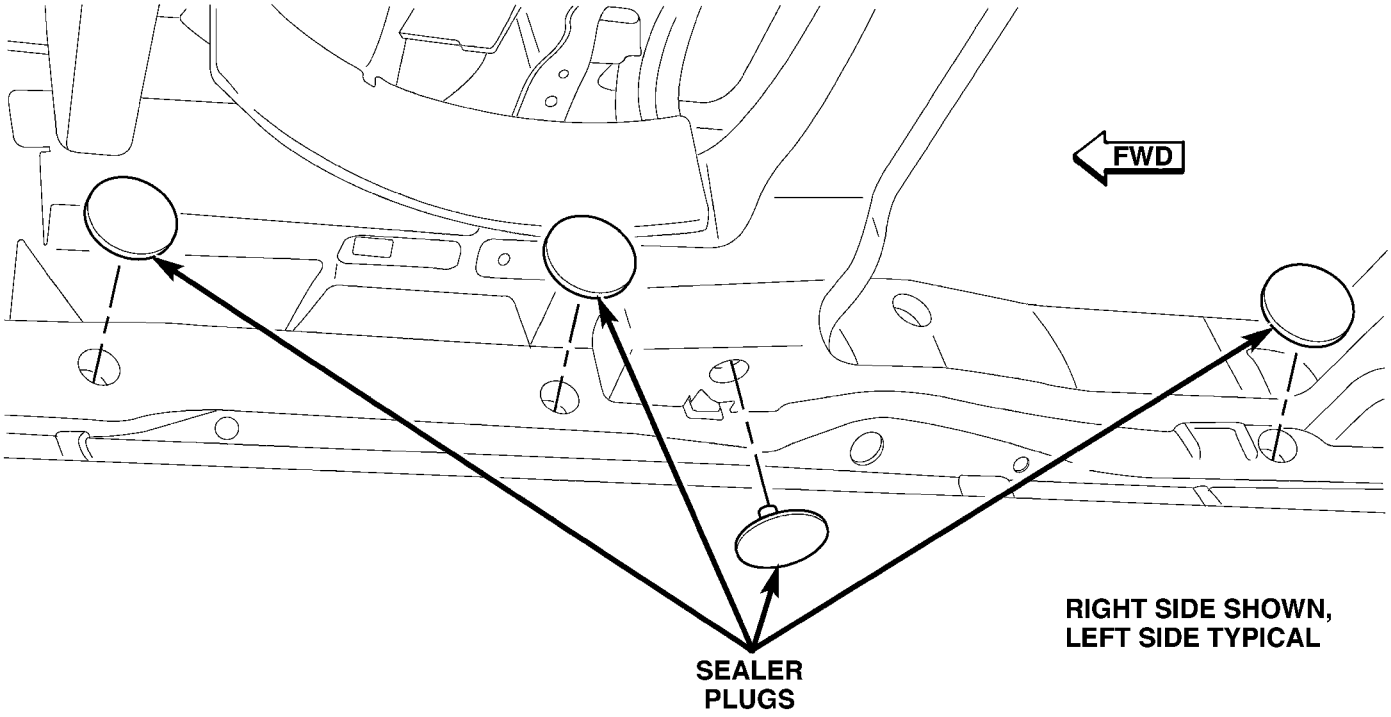

Fig. 62 UNDERBODY PLASTIC PLUGS (1 OF 2)

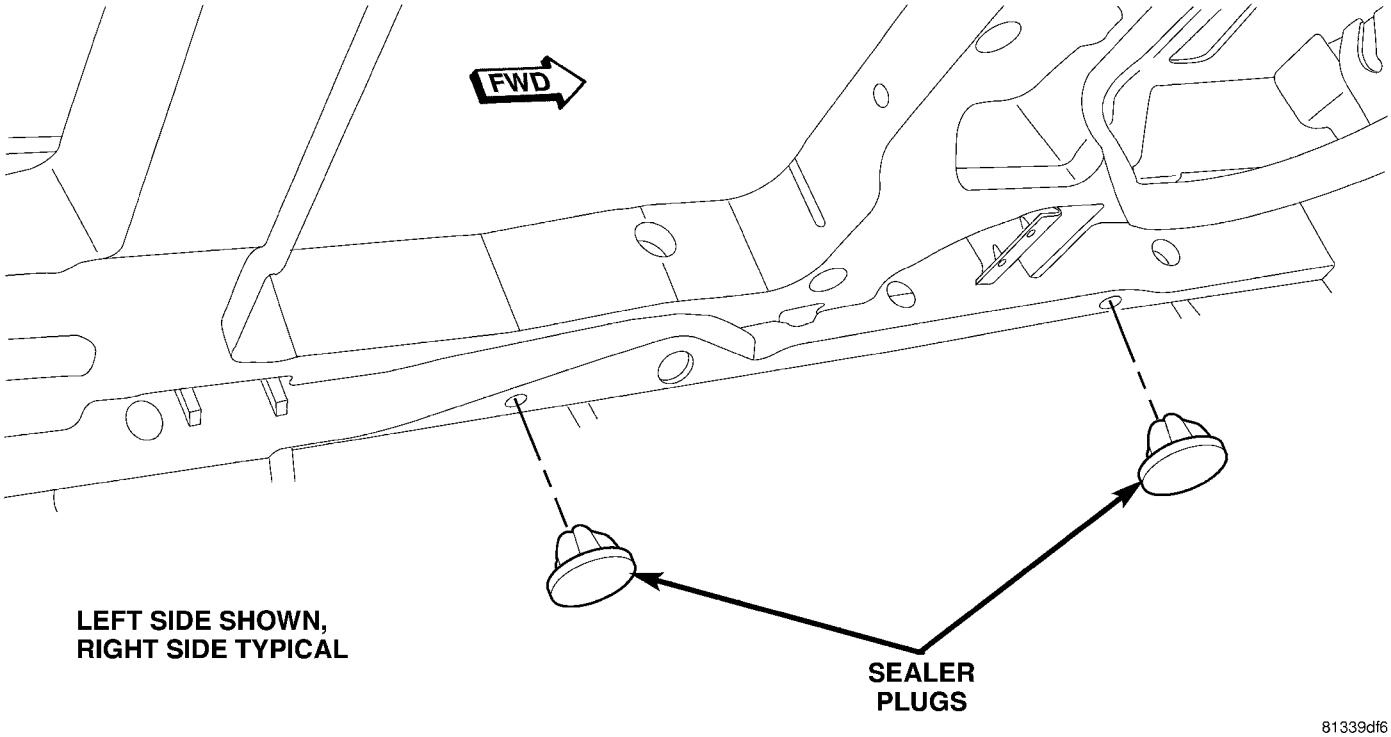

Fig. 63 UNDERBODY PLASTIC PLUGS (2 OF 2)

SEALER LOCATIONS (Continued)

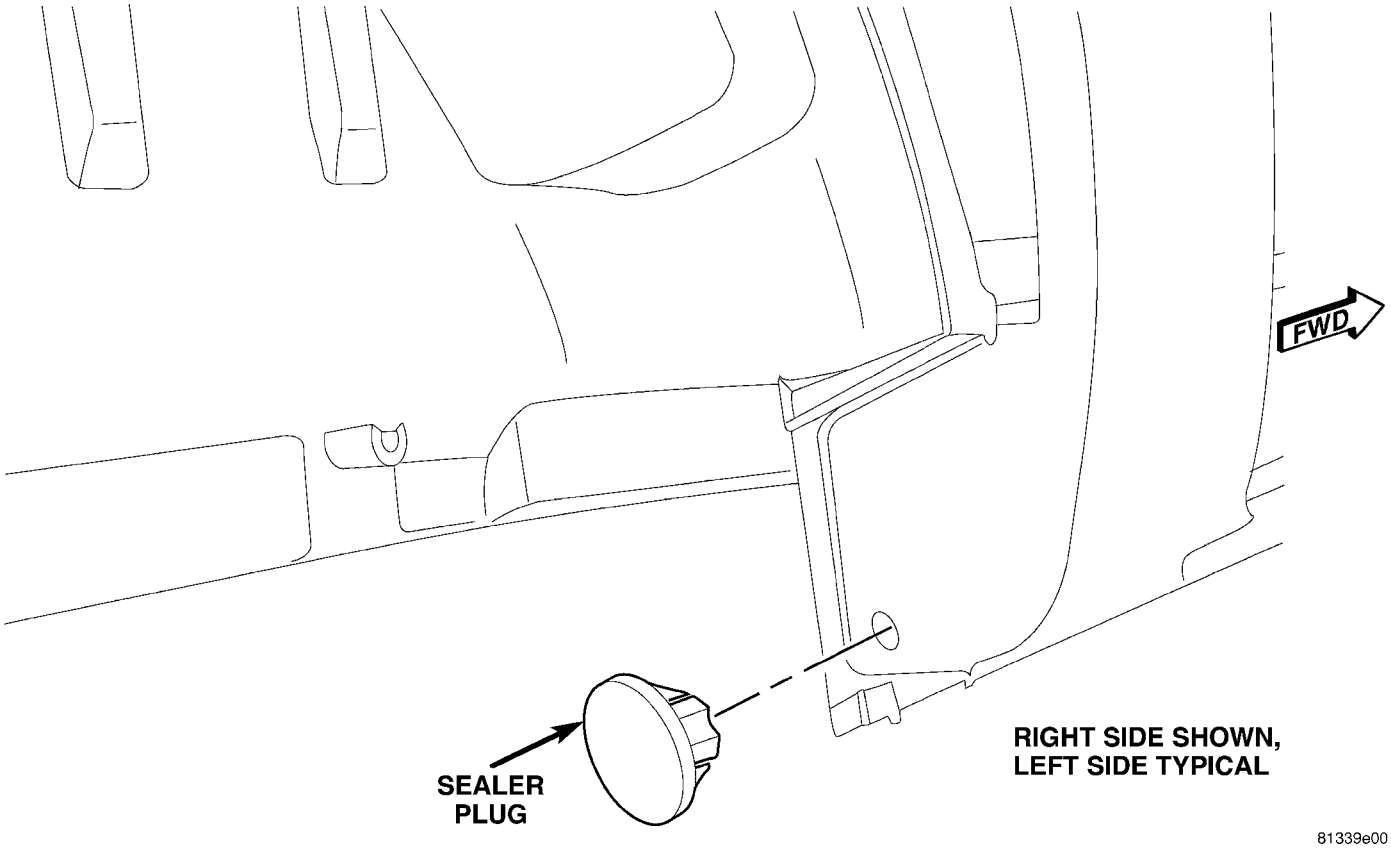

Fig. 64 REAR WHEELHOUSE PLASTIC PLUG

STRUCTURAL ADHESIVE LOCATIONS

SPECIFICATIONS

SPECIFICATIONS - STRUCTURAL ADHESIVE LOCATIONS

INDEX

DESCRIPTION	FIGURE
UPPER COWL PLENUM, UPPER AND LOWER DASH PANEL	65
ROOF AND REAR QUARTER PANELS - LONG WHEEL BASE ONLY	66
FLOOR PAN - LONG WHEEL BASE ONLY	67
SUSPENSION HANGER REINFORCEMENTS - LONG WHEEL BASE ONLY	68
FRONT HINGE PILLAR REINFORCEMENTS - LONG WHEEL BASE ONLY	69
ROOF AND REAR QUARTER PANELS - SHORT WHEEL BASE ONLY	70
FLOOR PAN - SHORT WHEEL BASE ONLY	71
FRONT SIDE RAILS/OUTER CROSS MEMBER BRACKETS	72
OUTER ROOF PANEL/UPPER WINDSHIELD FRAME	73
COWL SIDE PANEL / BODY SIDE APERTURE, B-PILLAR / SLIDING DOOR TRACK SUPPORT	74
FRONT HINGE PILLAR REINFORCEMENT / COWL SIDE TAPPING PLATE	75
UPPER COWL PLENUM / UPPER AND LOWER DASH PANEL - RIGHT HAND DRIVE ONLY	76

STRUCTURAL ADHESIVE LOCATIONS (Continued)

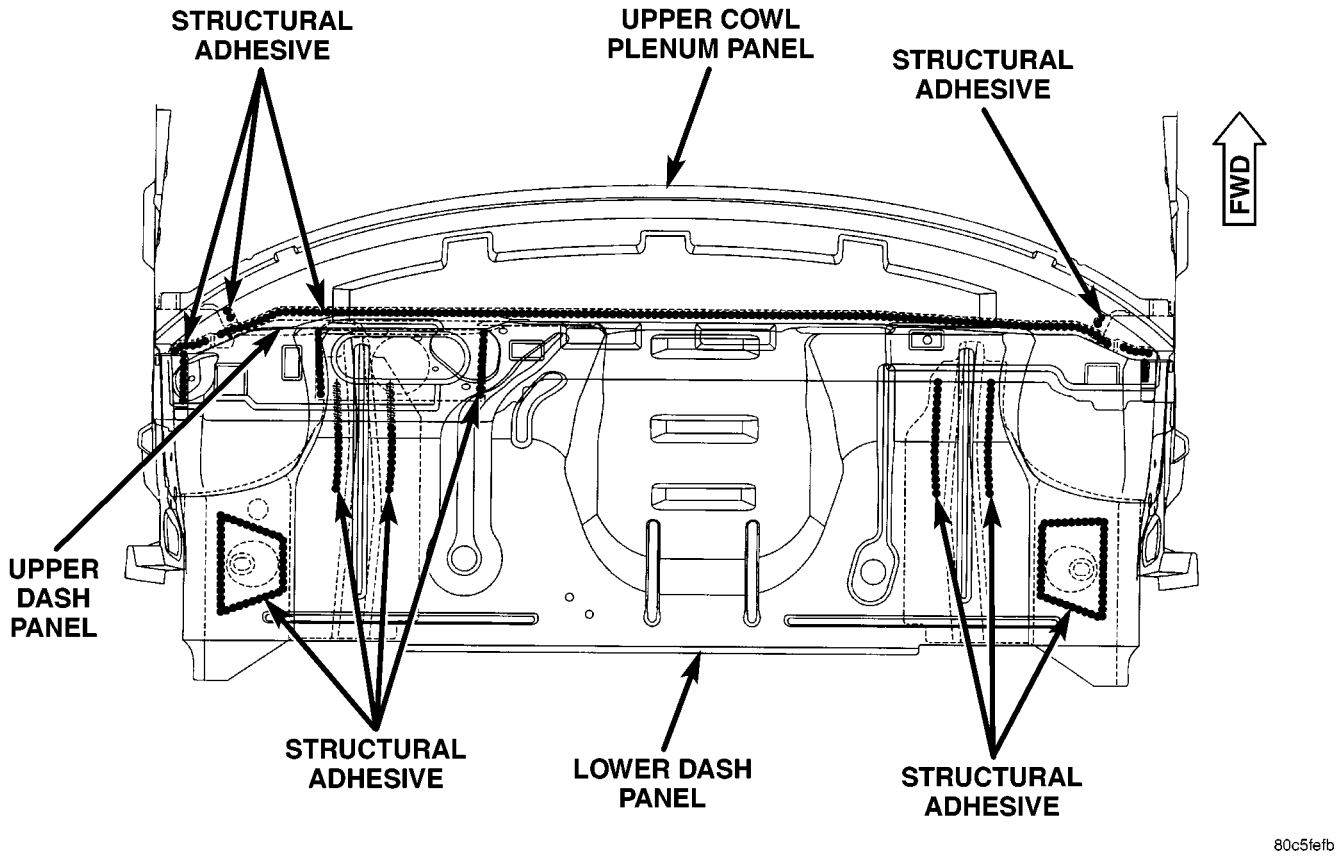

Fig. 65 UPPER COWL PLENUM, UPPER AND LOWER DASH PANEL

STRUCTURAL ADHESIVE LOCATIONS (Continued)

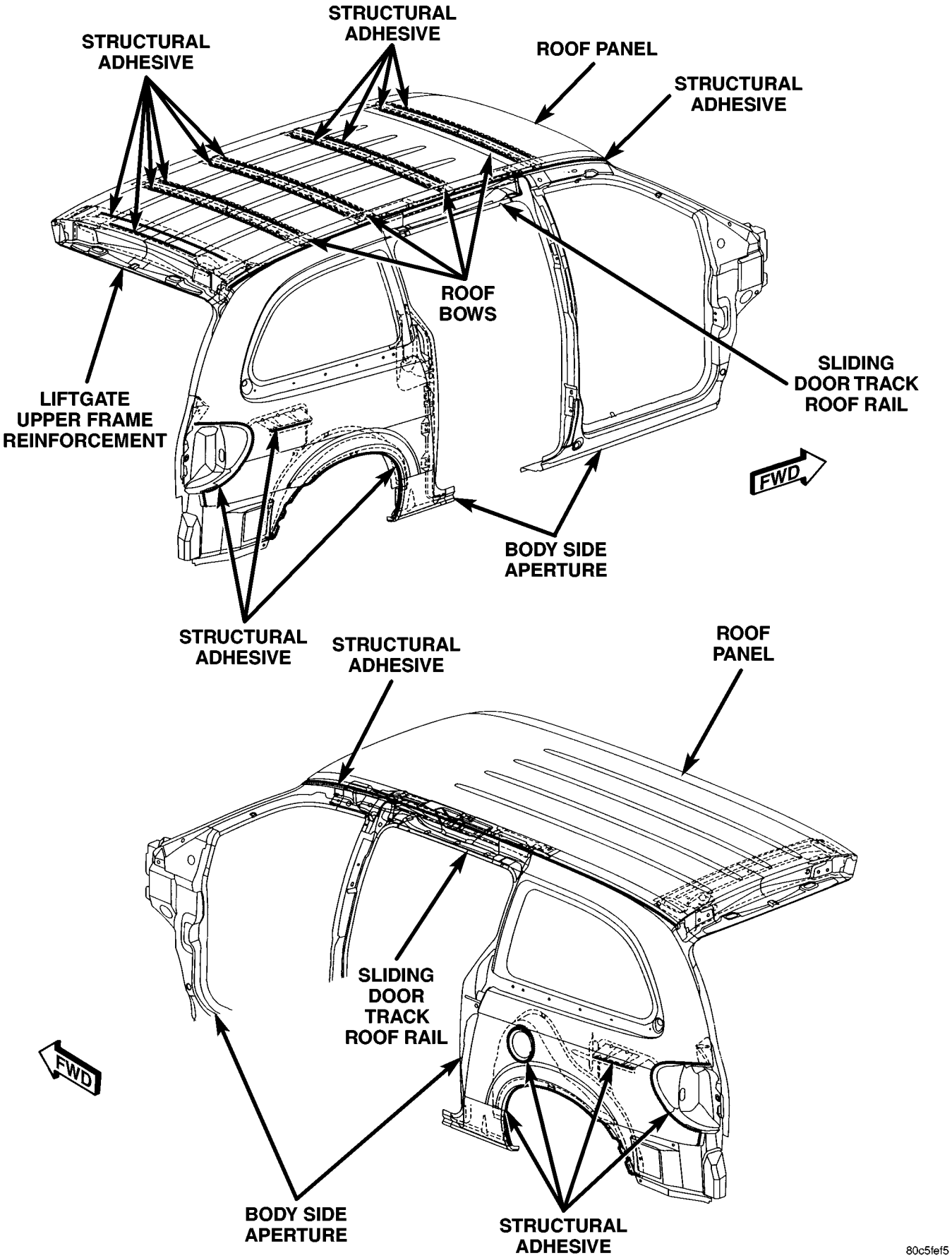

Fig. 66 ROOF AND REAR QUARTER PANELS - LONG WHEEL BASE ONLY

STRUCTURAL ADHESIVE LOCATIONS (Continued)

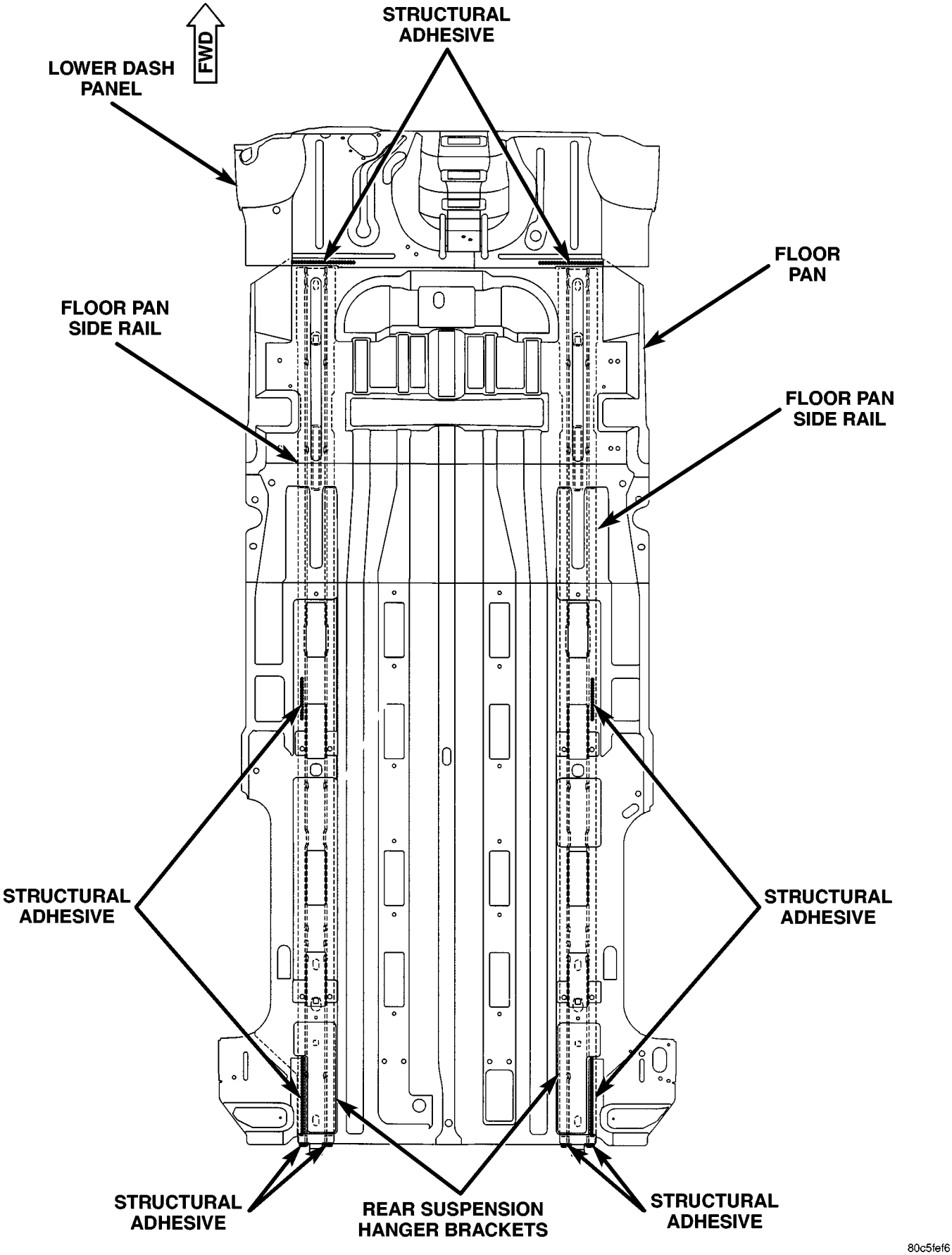

Fig. 67 FLOOR PAN - LONG WHEEL BASE ONLY

STRUCTURAL ADHESIVE LOCATIONS (Continued)

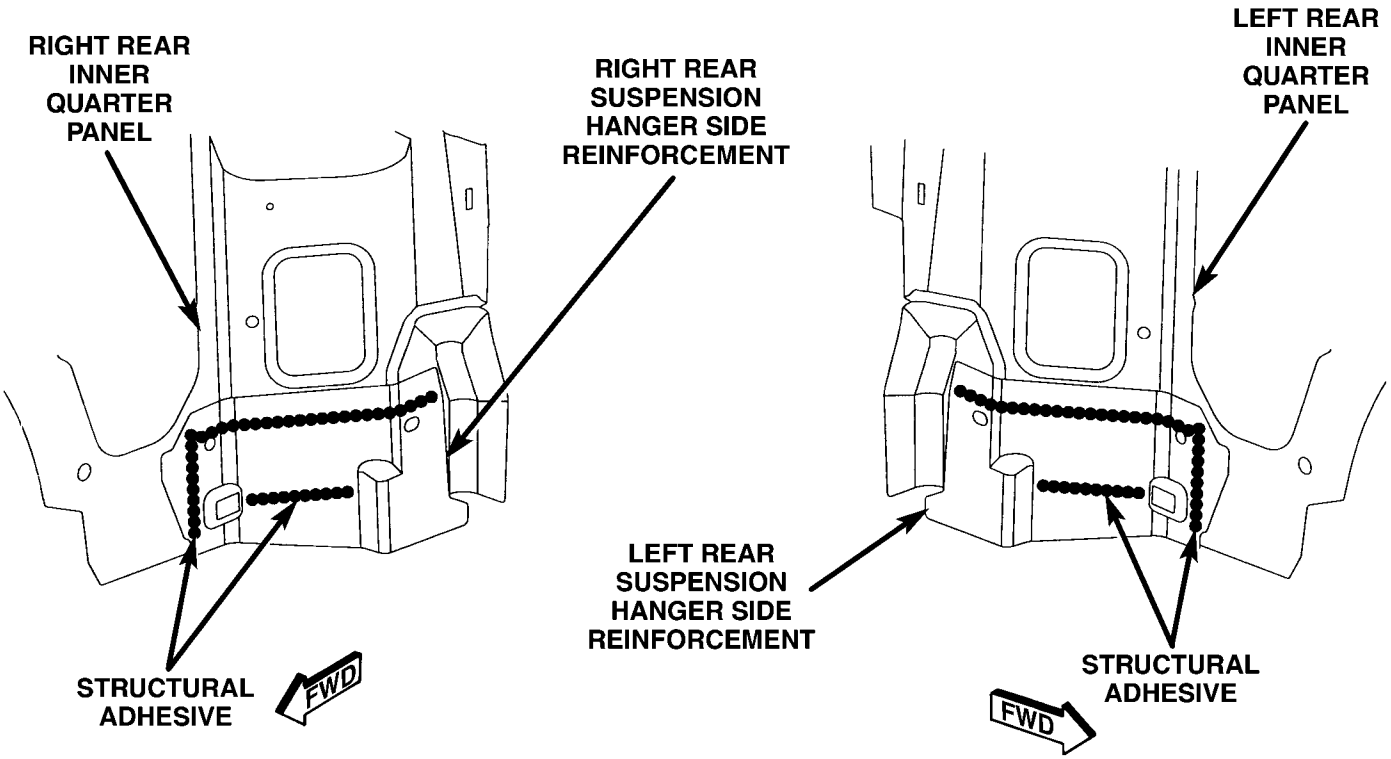

Fig. 68 SUSPENSION HANGER REINFORCEMENTS - LONG WHEEL BASE ONLY

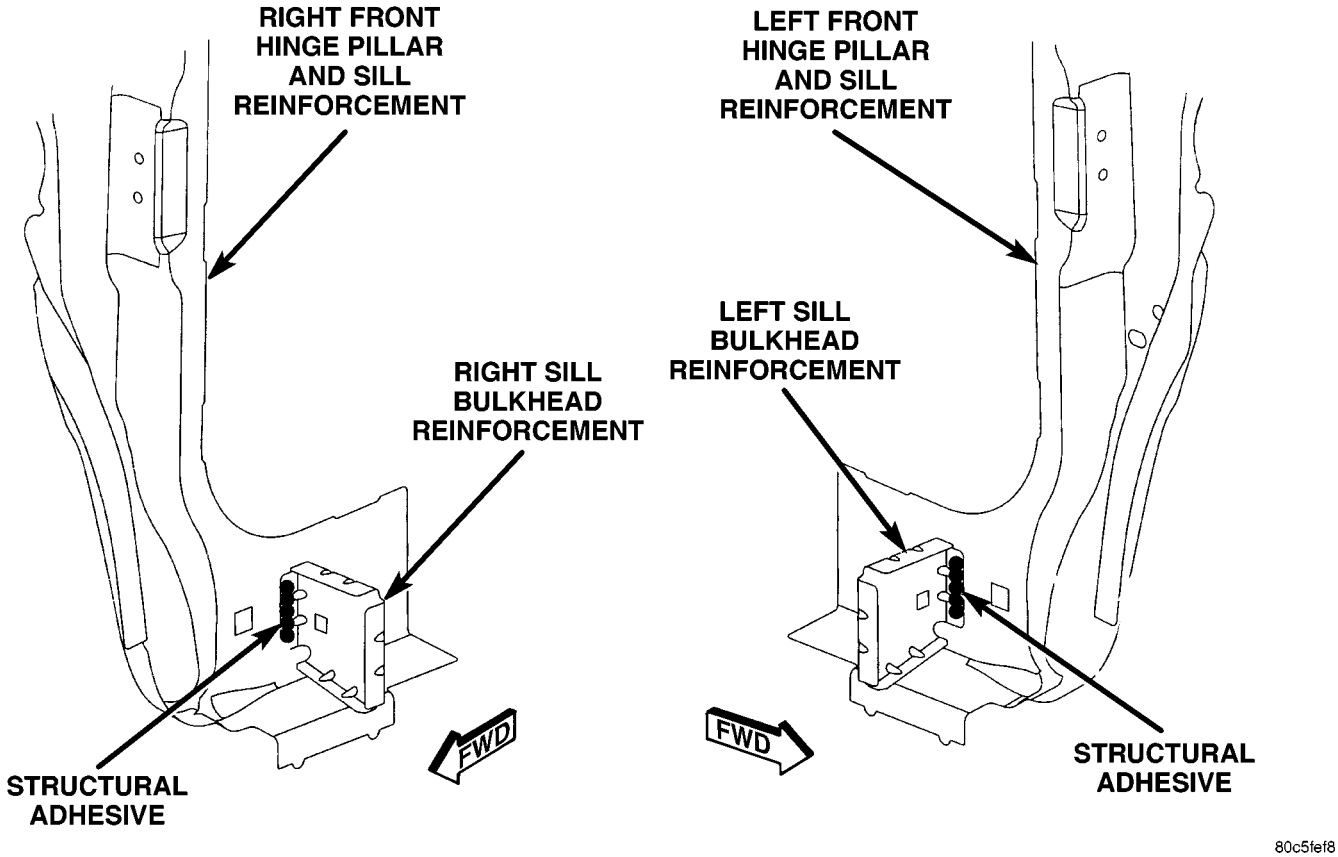

Fig. 69 FRONT HINGE PILLAR REINFORCEMENTS - LONG WHEEL BASE ONLY

STRUCTURAL ADHESIVE LOCATIONS (Continued)

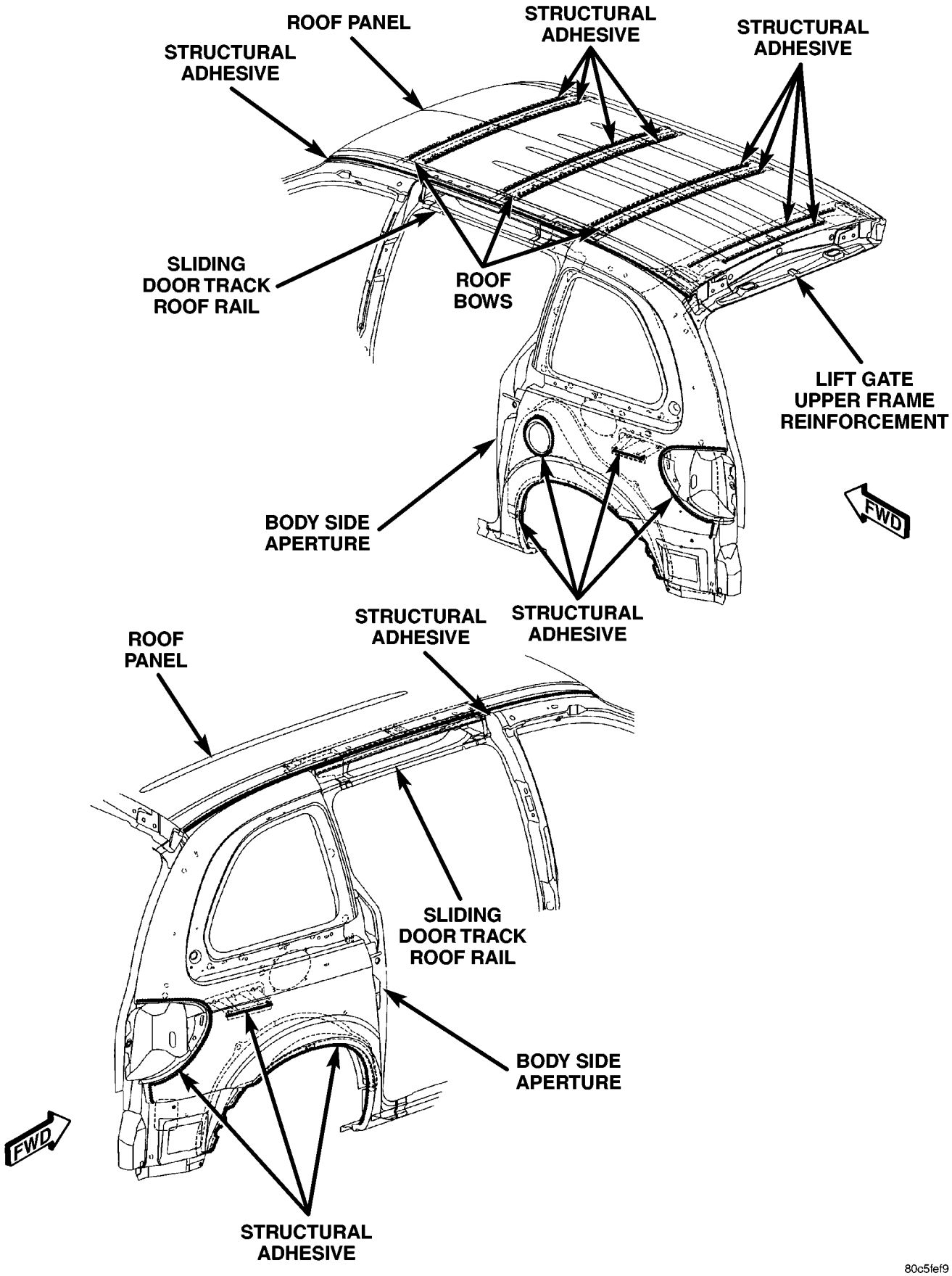

Fig. 70 ROOF AND REAR QUARTER PANELS - SHORT WHEEL BASE ONLY

STRUCTURAL ADHESIVE LOCATIONS (Continued)

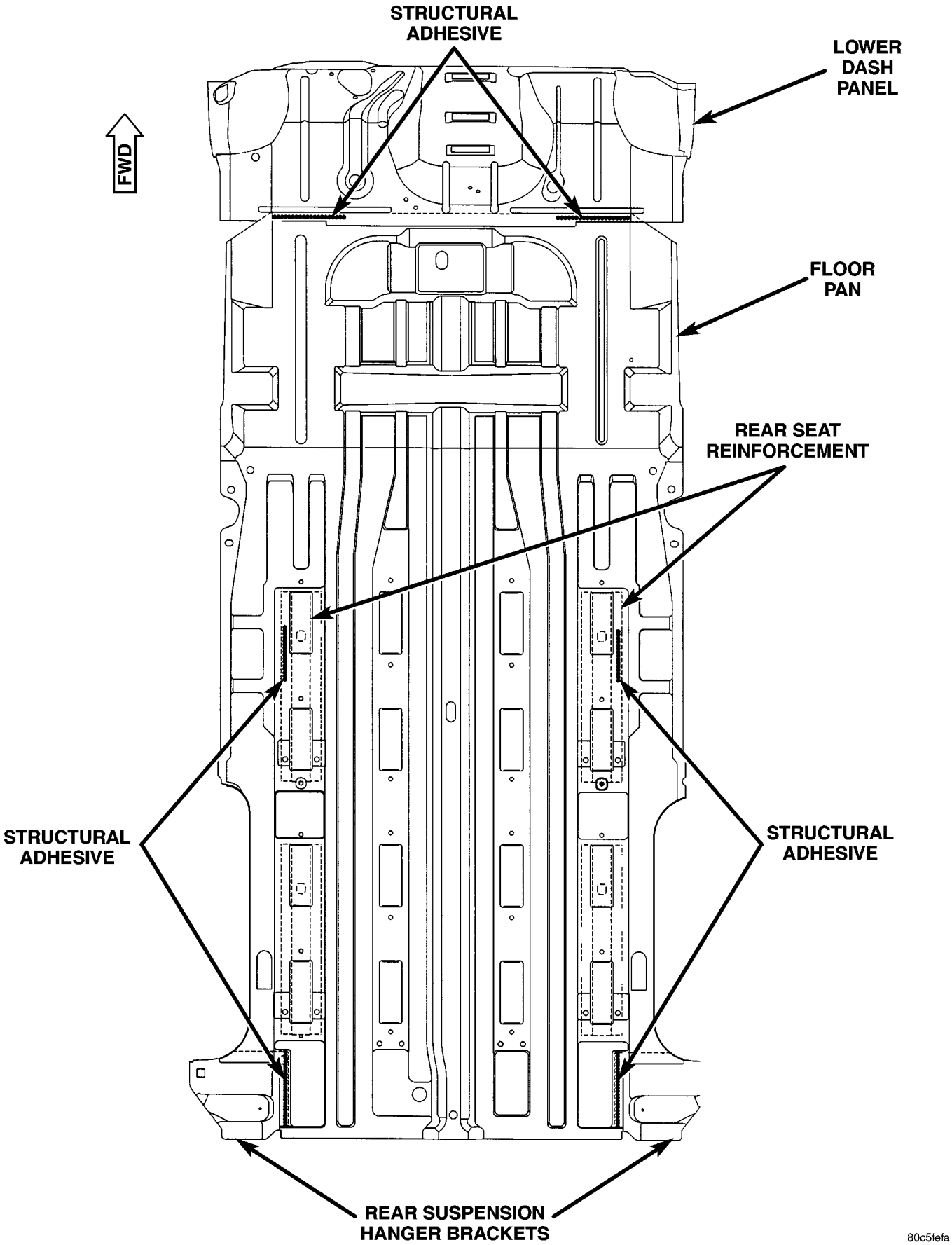

Fig. 71 FLOOR PAN - SHORT WHEEL BASE ONLY

STRUCTURAL ADHESIVE LOCATIONS (Continued)

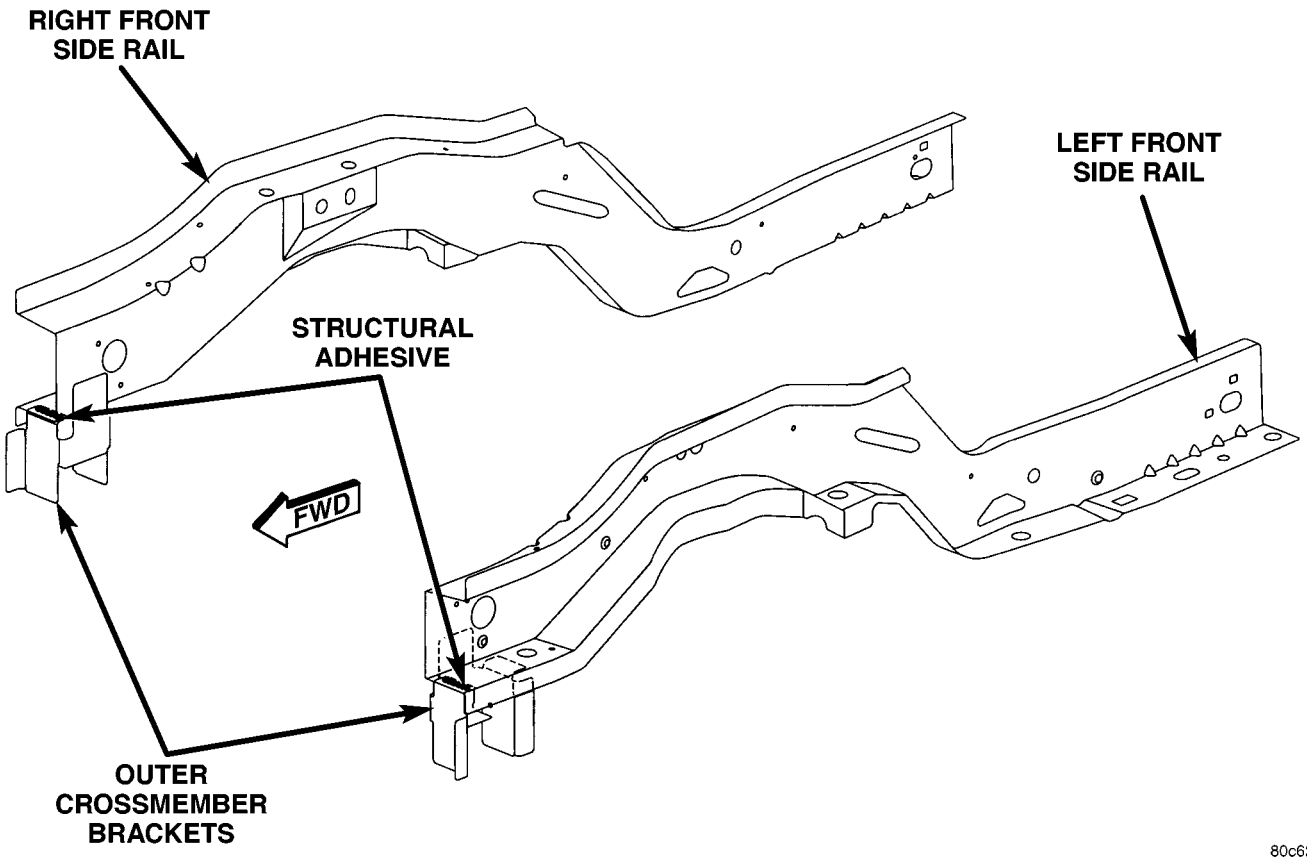

Fig. 72 FRONT SIDE RAILS/OUTER CROSS MEMBER BRACKETS

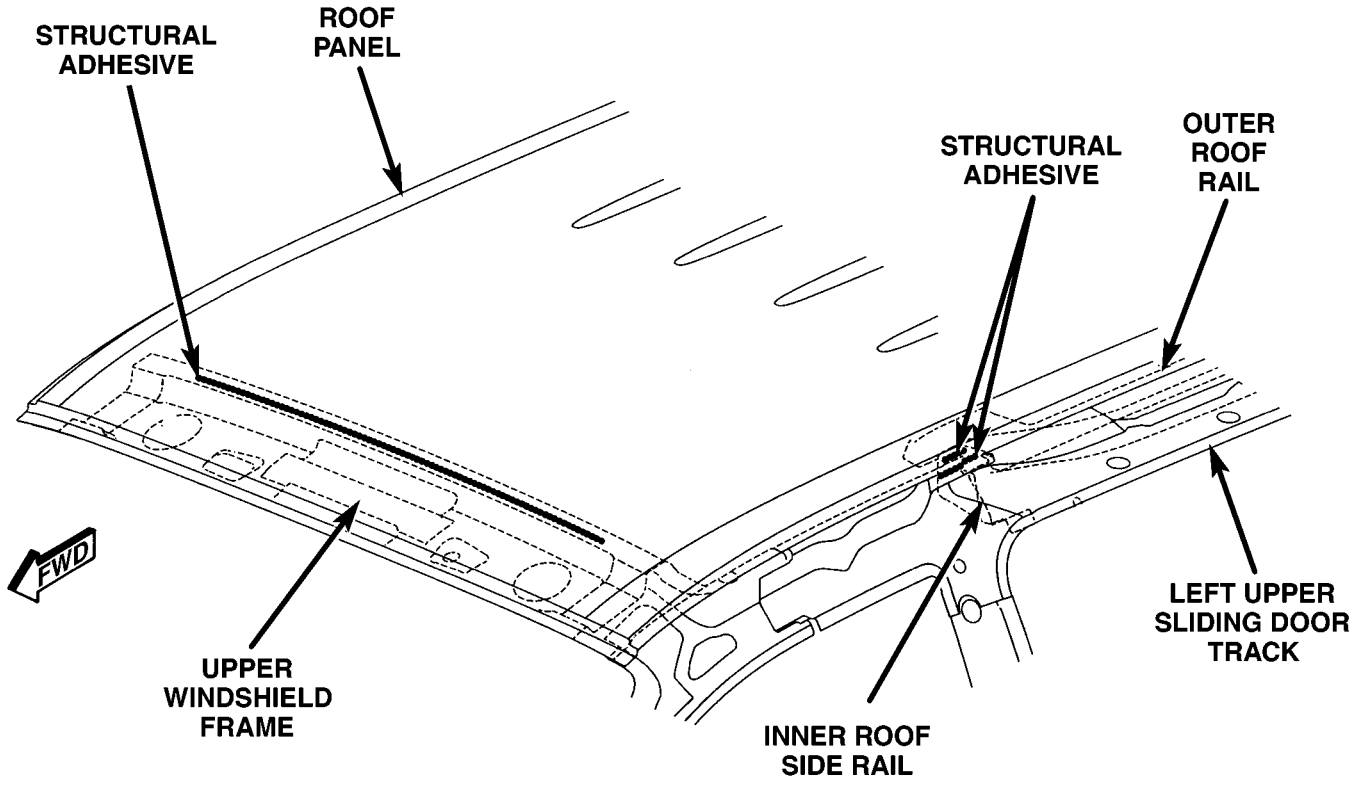

Fig. 73 OUTER ROOF PANEL/UPPER WINDSHIELD FRAME

STRUCTURAL ADHESIVE LOCATIONS (Continued)

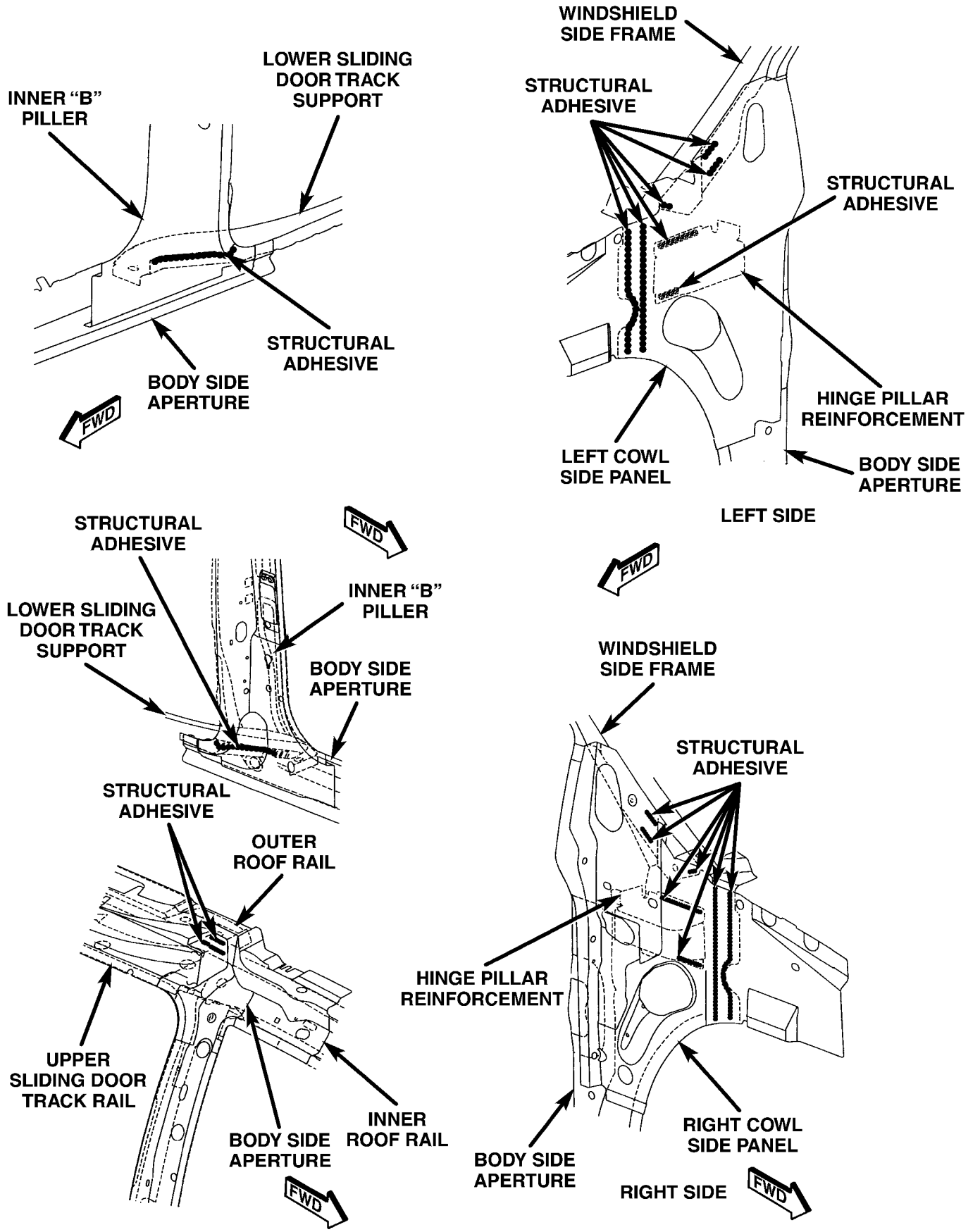

80a8eee0

Fig. 74 COWL SIDE PANEL / BODY SIDE APERTURE, B-PILLAR / SLIDING DOOR TRACK SUPPORT

STRUCTURAL ADHESIVE LOCATIONS (Continued)

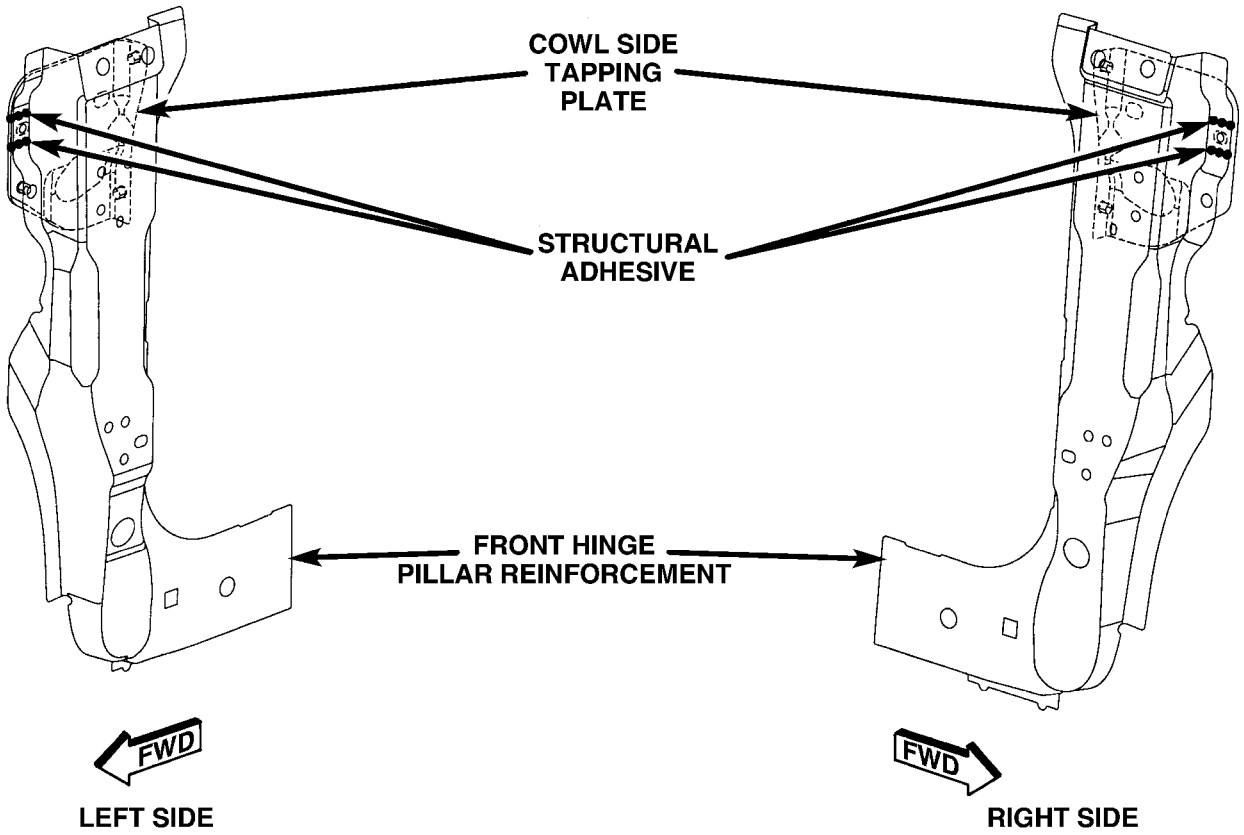

Fig. 75 FRONT HINGE PILLAR REINFORCEMENT / COWL SIDE TAPPING PLATE

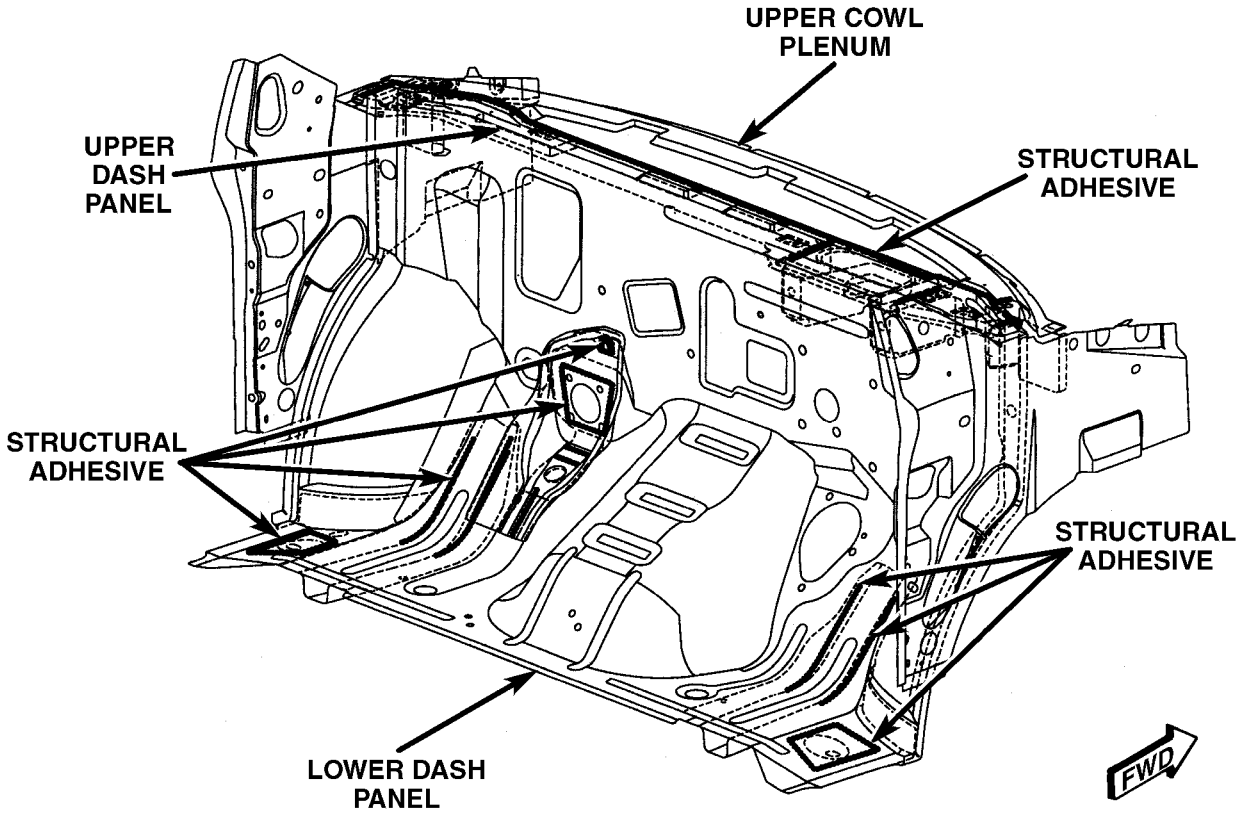

Fig. 76 UPPER COWL PLENUM / UPPER AND LOWER DASH PANEL - RIGHT HAND DRIVE ONLY

STRUCTURAL ADHESIVE LOCATIONS (Continued)

SPECIFICATIONS - STRUCTURAL ADHESIVE LOCATIONS - FOLD-IN-FLOOR ONLY

INDEX

DESCRIPTION	FIGURE
FRONT FLOOR PAN	77
LADDER COMPLETE (1 OF 3)	78
LADDER COMPLETE (2 OF 3)	79
LADDER COMPLETE (3 OF 3)	80
LOWER LADDER ASSEMBLY	81
MIDDLE FLOOR PAN (1 OF 2)	82
MIDDLE FLOOR PAN (2 OF 2)	83
SECOND AND THIRD ROW SEAT TUBS	84

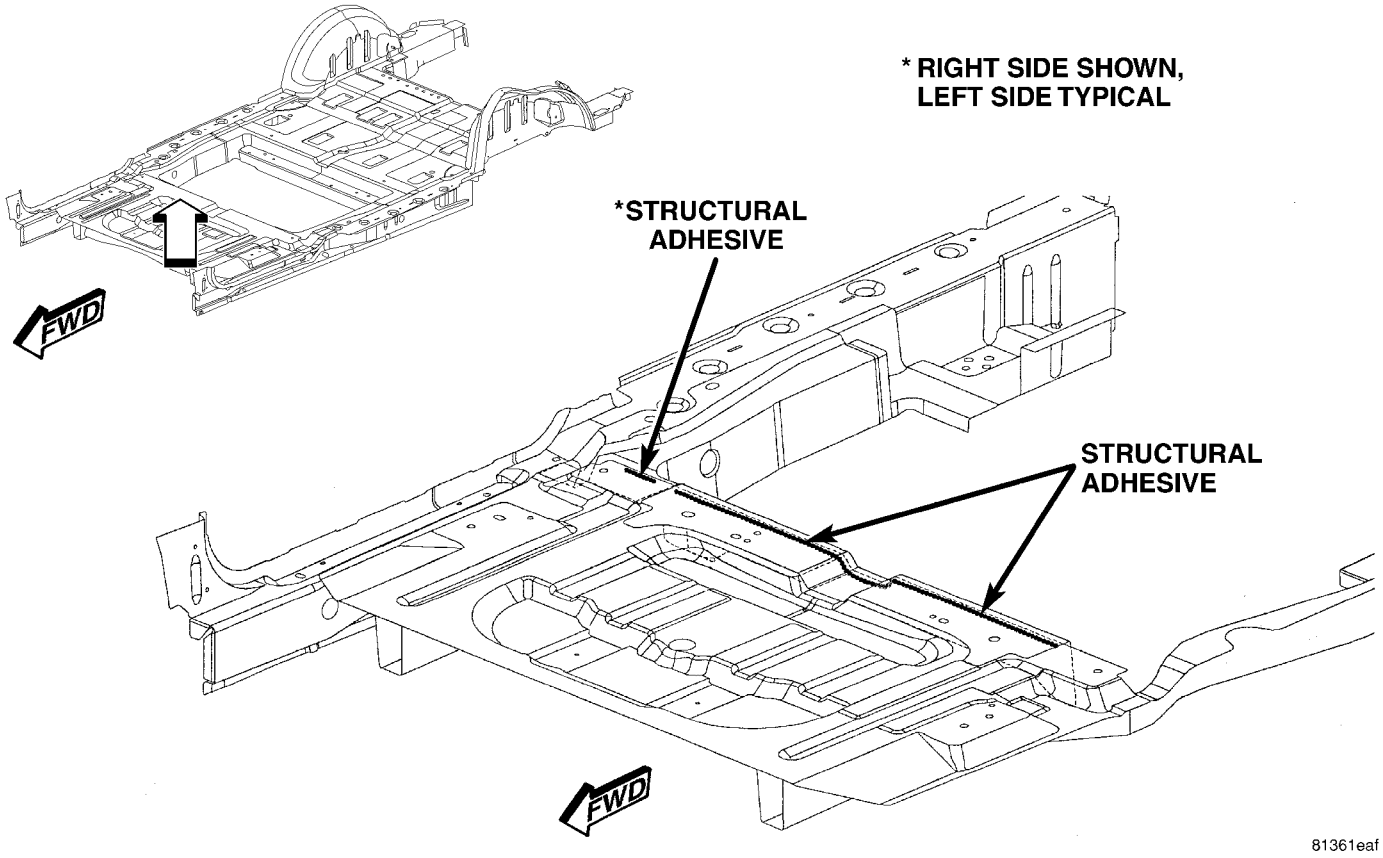

Fig. 77 FRONT FLOOR PAN

STRUCTURAL ADHESIVE LOCATIONS (Continued)

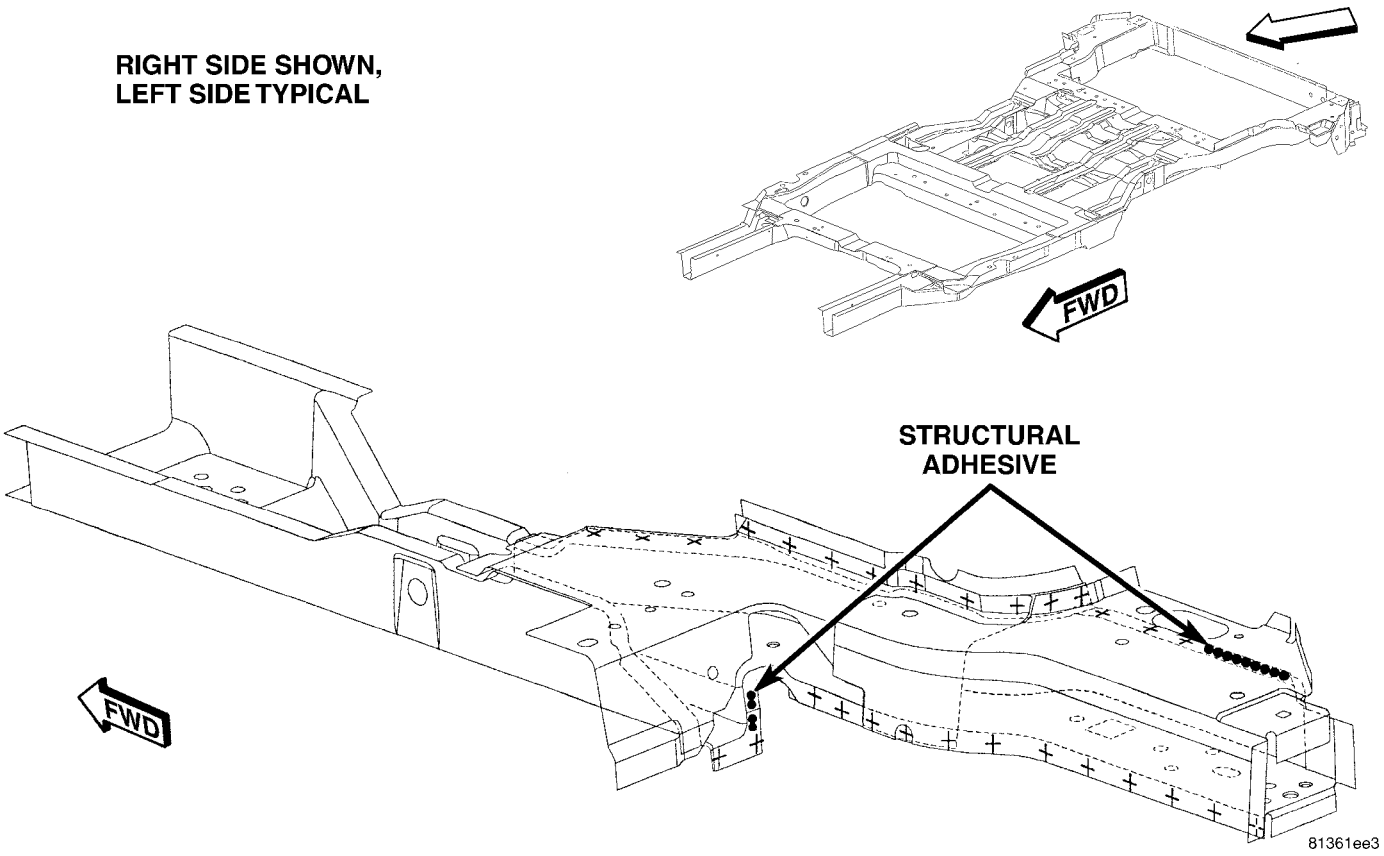

Fig. 78 LADDER COMPLETE (1 OF 3)

STRUCTURAL ADHESIVE LOCATIONS (Continued)

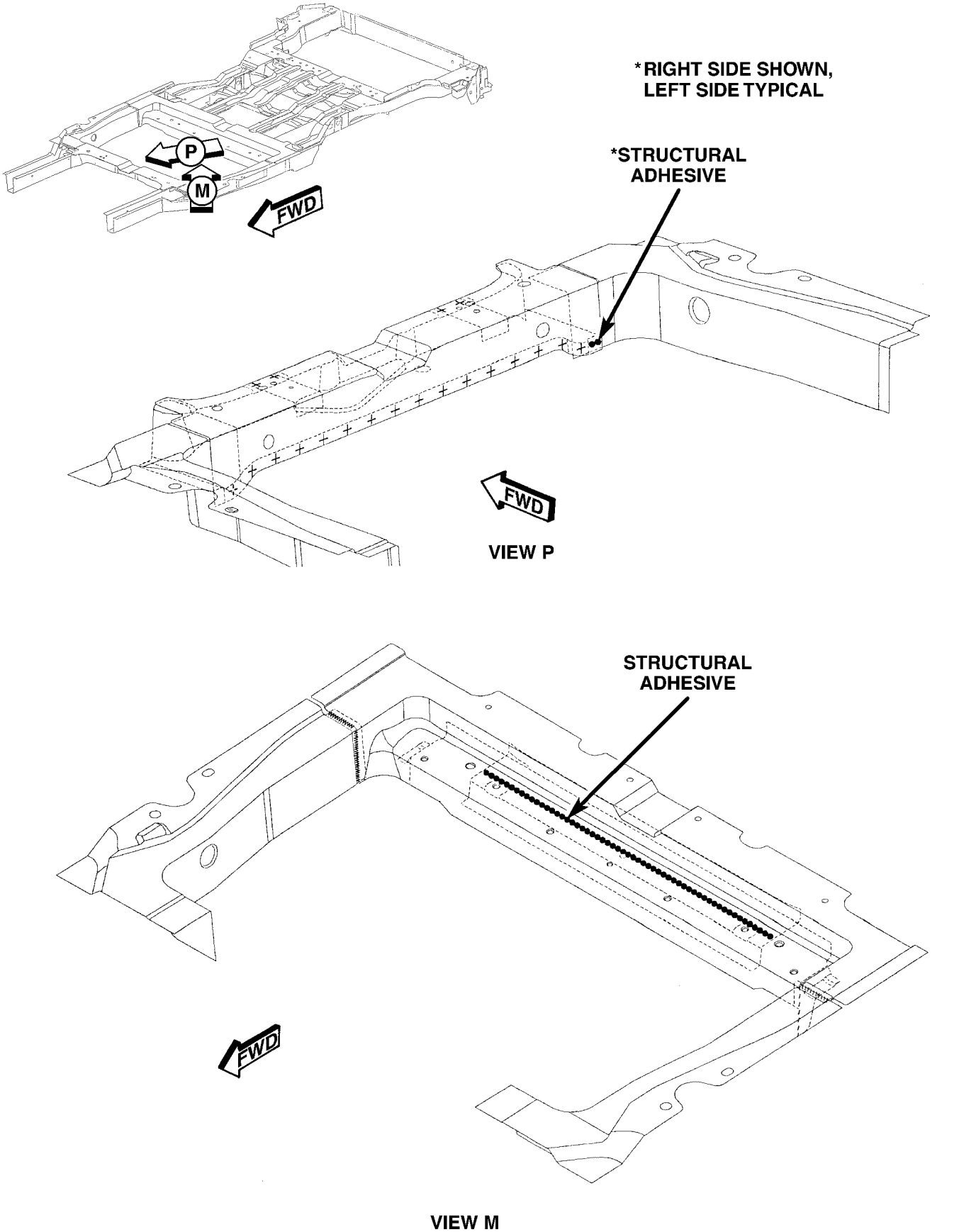

Fig. 79 LADDER COMPLETE (2 OF 3)

STRUCTURAL ADHESIVE LOCATIONS (Continued)

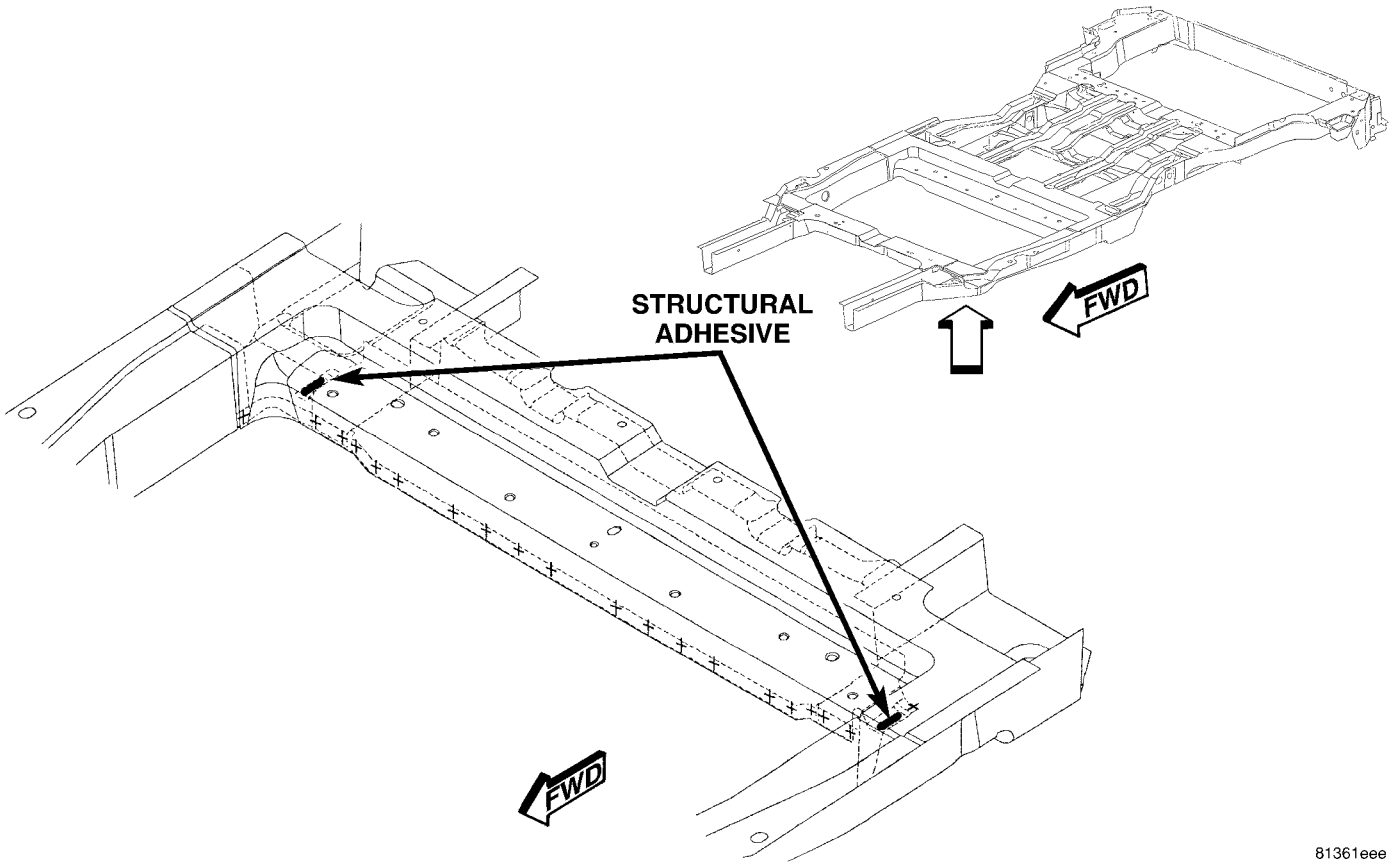

Fig. 80 LADDER COMPLETE (3 OF 3)

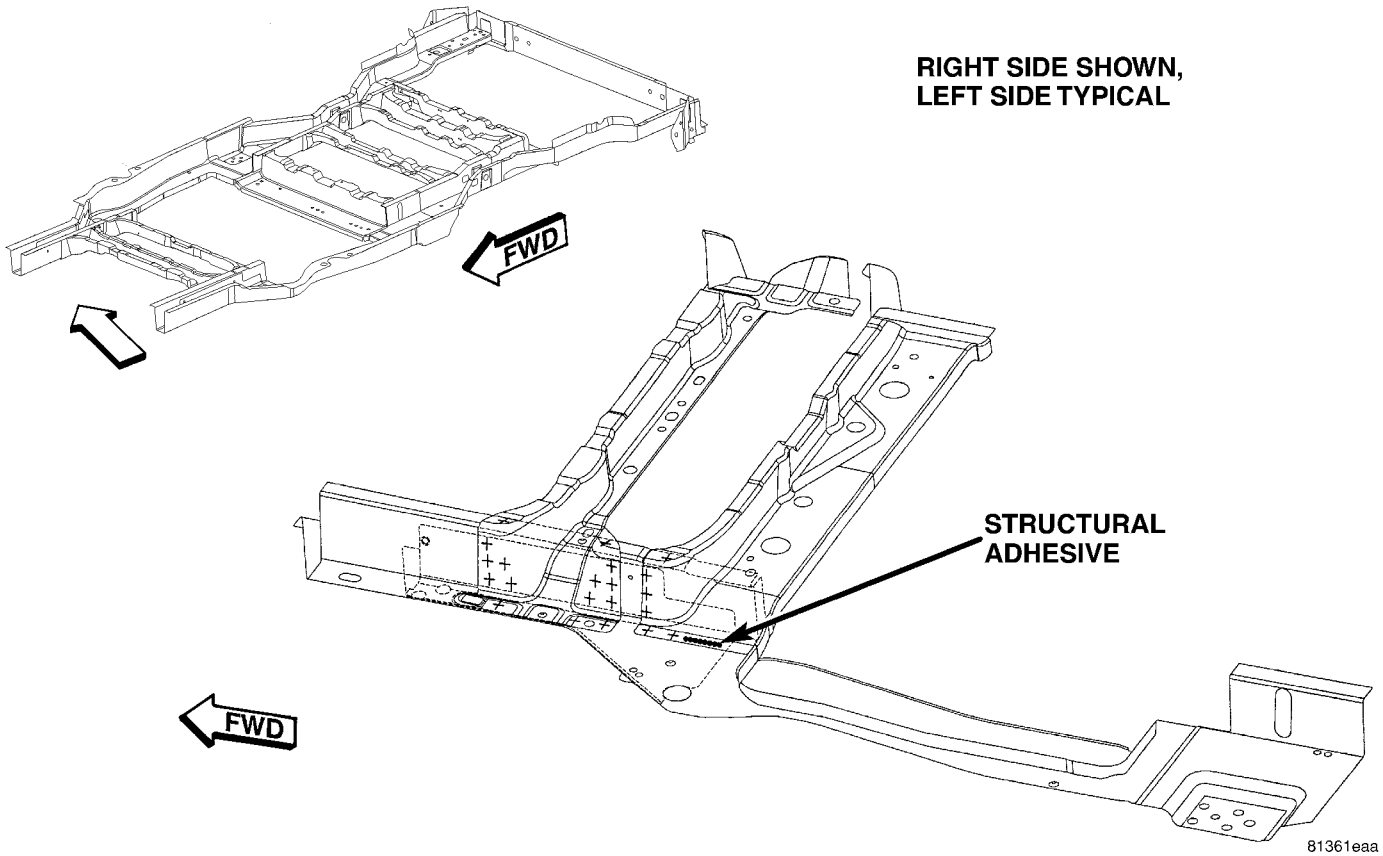

Fig. 81 LOWER LADDER ASSEMBLY

STRUCTURAL ADHESIVE LOCATIONS (Continued)

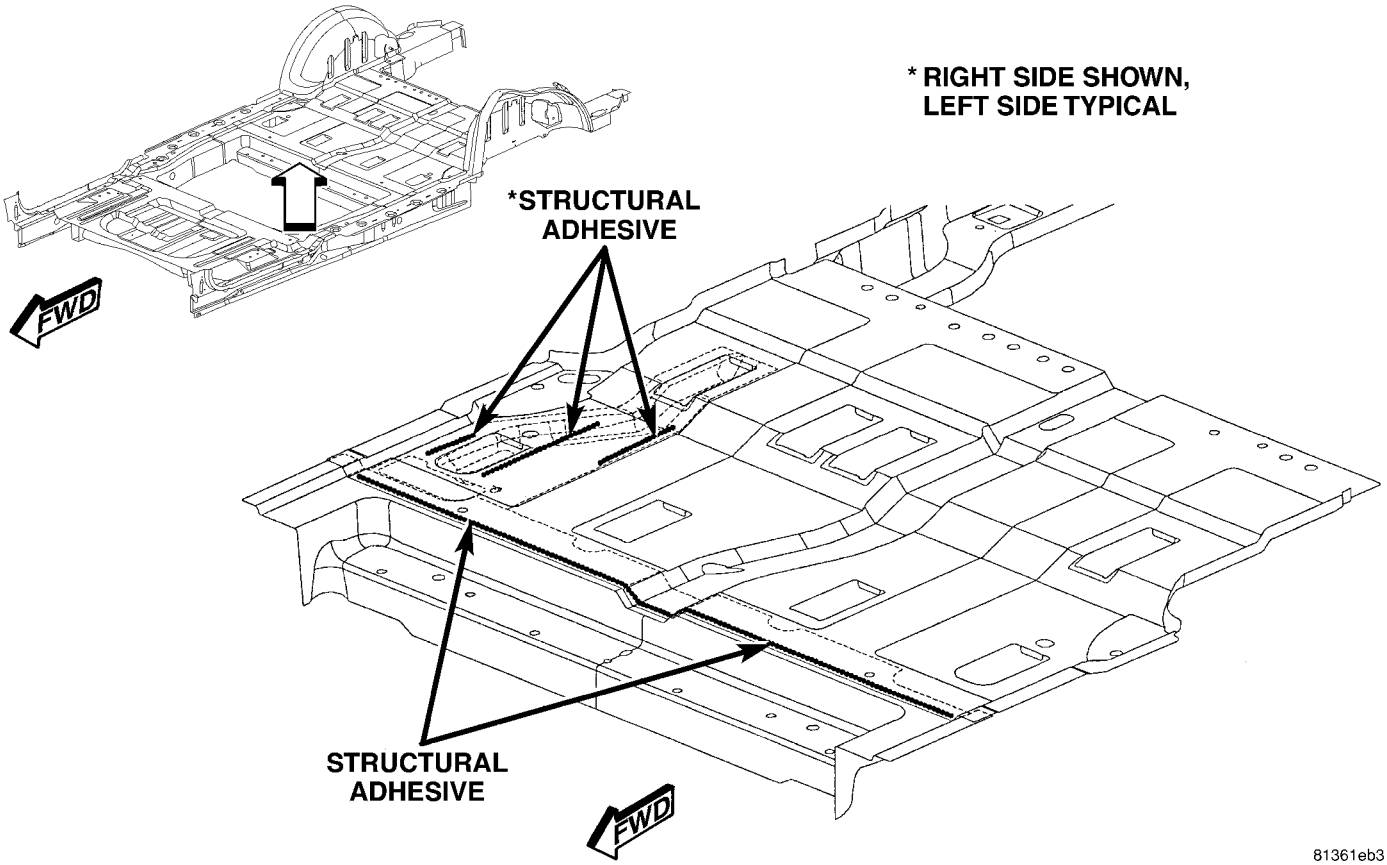

Fig. 82 MIDDLE FLOOR PAN (1 OF 2)

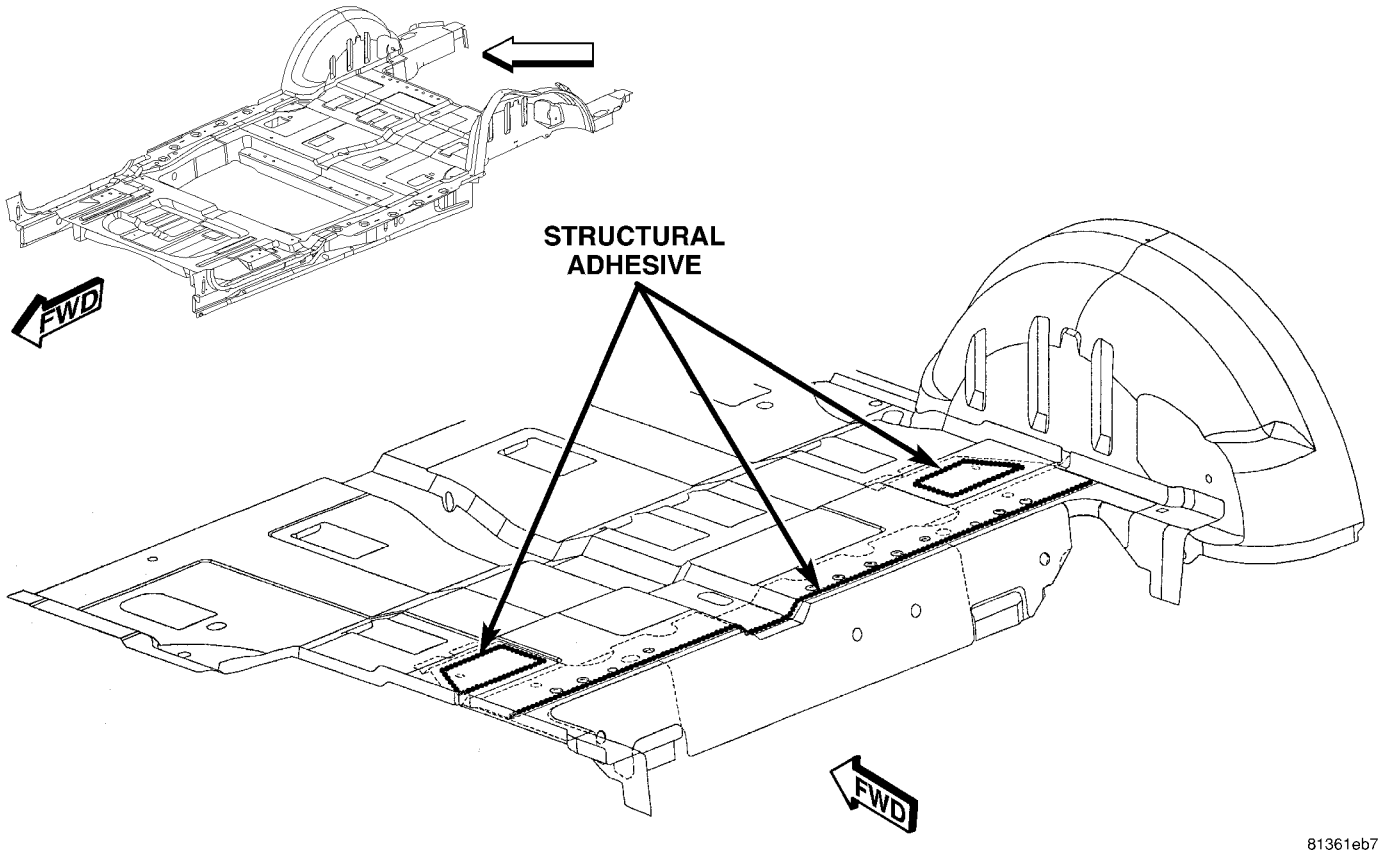

Fig. 83 MIDDLE FLOOR PAN (2 OF 2)

STRUCTURAL ADHESIVE LOCATIONS (Continued)

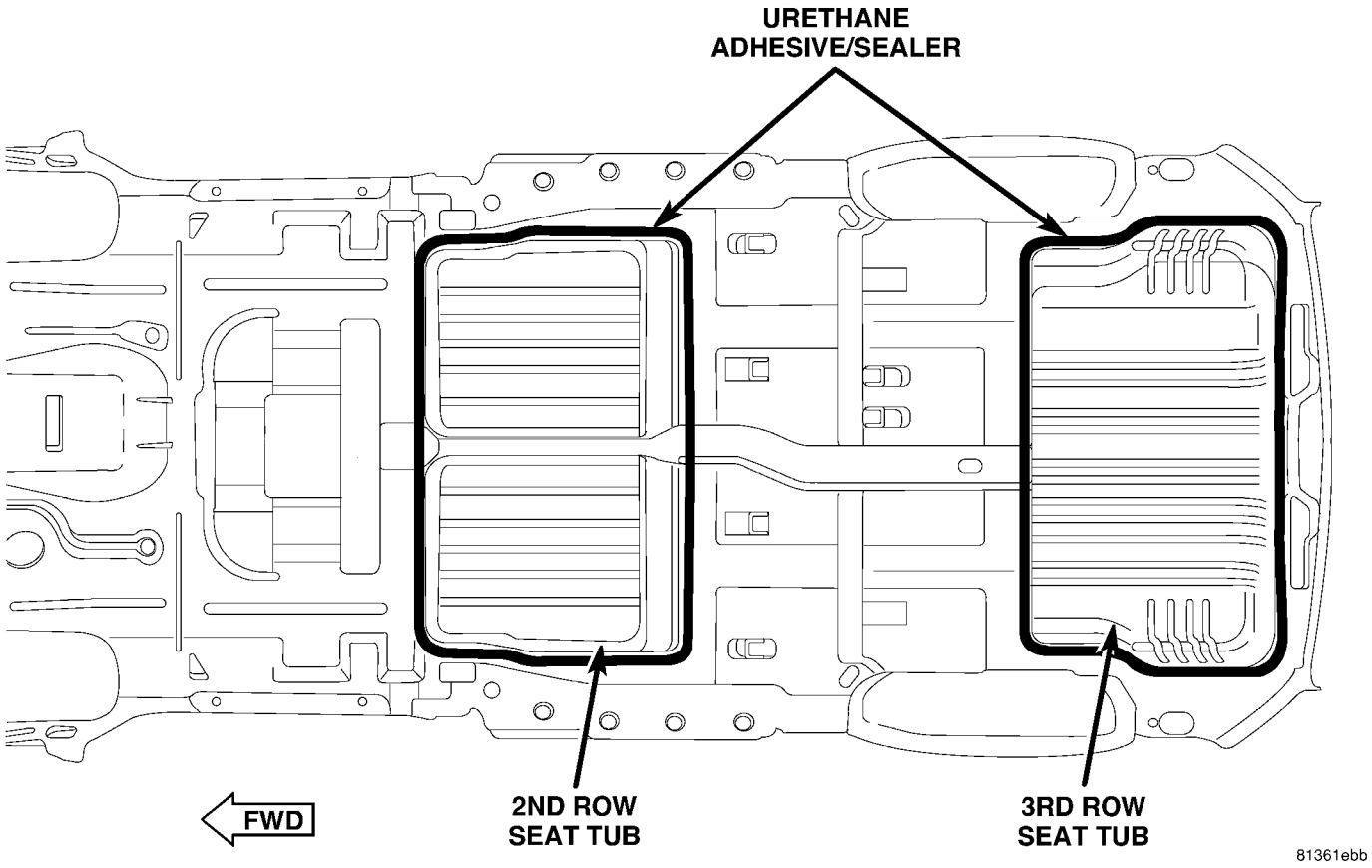

Fig. 84 SECOND AND THIRD ROW SEAT TUBS

WELD LOCATIONS

SPECIFICATIONS

SPECIFICATIONS - WELD LOCATIONS

INDEX

DESCRIPTION	FIGURE
FRONT FENDER SHIELD - RIGHT	85
FRONT FENDER SHIELD - LEFT	86
STRUT TOWER AND REINFORCEMENTS - RIGHT	87
SUSPENSION RETAINERS AND REINFORCEMENTS - RIGHT	88
STRUT TOWER AND REINFORCEMENTS - LEFT	89
SUSPENSION RETAINERS AND REINFORCEMENTS - LEFT	90
FLOOR PAN REINFORCEMENTS - SIDE RAILS	91
REAR SUSPENSION BRACKETS	92
FLOOR PAN CROSS MEMBERS	93
SEAT REINFORCEMENTS - LONG WHEEL BASE ONLY	94
STRIKER REINFORCEMENTS - LONG WHEEL BASE ONLY	95
FUEL TANK MOUNTING/REAR SEAT AND SUSPENSION	96
REAR SUSPENSION HANGER BRACKETS - LONG WHEEL BASE	97
FRONT SEAT CROSS MEMBER	98
FLOOR PAN SIDE RAIL REINFORCEMENT	99
SILL BULKHEAD REINFORCEMENTS	100
FLOOR PAN CROSS MEMBER REINFORCEMENTS	101
FRONT SEAT CROSS MEMBER	102
SEAT REINFORCEMENT CROSS MEMBERS - SHORT WHEEL BASE	103
CENTER CONSOLE REINFORCEMENT - SHORT WHEEL BASE	104
REAR SUSPENSION HANGER BRACKETS - SHORT WHEEL BASE	105
LOWER LIFTGATE PANEL LATCH REINFORCEMENT	106
ENGINE MOUNTING PLATE AND TOW BRACKET	107
HEADLAMP MOUNTING PLATE	108
LOWER RADIATOR CROSS MEMBER BRACKETS	109
CROSS MEMBER EXTENSIONS	110
JACK MOUNTING BRACKET - LONG WHEEL BASE SHOWN, SHORT SIMILAR	111
FRONT SEAT CROSS MEMBER - LONG WHEELBASE ONLY	112
FRONT SEAT CROSS MEMBER - ALL WHEEL DRIVE ONLY	113
FUEL TANK SUPPORT CROSS MEMBERS - LONG WHEEL BASE ONLY	114
REAR SUPPORT AND TIRE STOWAGE CROSS MEMBERS - LONG WHEEL BASE ONLY	115
INNER SIDE SILLS - LONG WHEEL BASE ONLY	116
WHEELHOUSES, SIDE SILLS, SUSPENSION BRACKETS - LONG WHEEL BASE ONLY	117
REAR SEAT REINFORCEMENTS - SHORT WHEEL BASE ONLY	118

WELD LOCATIONS (Continued)

DESCRIPTION	FIGURE
FUEL TANK SUPPORT AND TIRE STOWAGE - SHORT WHEEL BASE ONLY	119
INNER SIDE SILLS - SHORT WHEEL BASE ONLY	120
REAR SEAT REINFORCEMENTS - SHORT WHEEL BASE ONLY	121
CENTER CONSOLE REINFORCEMENT - SHORT WHEEL BASE ONLY	122
WHEELHOUSES - SHORT WHEEL BASE ONLY	123
FRONT SEAT CROSS MEMBER - SHORT WHEELBASE, ALL WHEEL DRIVE ONLY	124
FLOOR PAN SIDE RAIL - LONG WHEEL BASE ONLY	125
INNER BODY SIDE SILL REINFORCEMENTS	126
TOE BOARD CROSS MEMBER	127
FRONT SIDE RAIL - SHORT WHEEL BASE ONLY	128
DASH PANEL REINFORCEMENT	129
LOWER COWL PLENUM	130
UPPER COWL PLENUM SUPPORT	131
UPPER DASH PANEL	132
COWL SIDE PANELS	133
INSTRUMENT PANEL ATTACHMENT TAPPING PLATES	134
INSTRUMENT PANEL, DASH PANEL, ACM MODULE AND ACCELERATOR PEDAL	135
STRUT TOWER BRACKET AND COWL PLENUM	136
FRONT SIDE RAILS TO LOWER DASH PANEL	137
INNER BODY SIDE SILL TO LOWER DASH PANEL	138
FRONT HINGE TAPPING PLATE	139
FRONT HINGE PILLAR	140
INNER WINDSHIELD FRAME	141
WINDSHIELD FRAME	142
FENDER BRACKET	143
INNER B-PILLAR	144
STRIKER LATCH AND TAPPING PLATES	145
RIGHT REAR INNER QUARTER PANEL - LONG WHEEL BASE ONLY	146
RIGHT REAR INNER QUARTER PANEL/OUTER WHEELHOUSE - LONG WHEEL BASE ONLY	147
RIGHT REAR BODY SIDE APERTURE - LONG WHEEL BASE ONLY	148
STRIKER LATCH REINFORCEMENT - LONG WHEEL BASE ONLY	149
BELT TAPPING PLATE - LONG WHEEL BASE ONLY	150
C-PILLAR REINFORCEMENT - LONG WHEEL BASE ONLY	151
OUTER WHEELHOUSE - LONG WHEEL BASE ONLY	152
C AND D-PILLAR INNER REINFORCEMENTS - LONG WHEEL BASE ONLY	153
LEFT REAR INNER QUARTER PANEL - LONG WHEEL BASE ONLY	154
OUTER WHEELHOUSE EXTENSION - LONG WHEEL BASE ONLY	155
TAIL LAMP - LONG WHEEL BASE ONLY	156
SLIDING DOOR LATCH - LONG WHEEL BASE ONLY	157
ROOF BOW EXTENSION - LONG WHEEL BASE ONLY	158
RIGHT REAR INNER QUARTER PANEL - SHORT WHEEL BASE ONLY	159

WELD LOCATIONS (Continued)

DESCRIPTION	FIGURE
LATCH REINFORCEMENT AND OUTER WHEELHOUSE - SHORT WHEEL BASE ONLY	160
D-PILLAR REINFORCEMENT - SHORT WHEEL BASE ONLY	161
OUTER WHEELHOUSE - SHORT WHEEL BASE ONLY	162
LEFT REAR INNER QUARTER PANEL - SHORT WHEEL BASE ONLY	163
LATCH REINFORCEMENT - SHORT WHEEL BASE ONLY	164
D-PILLAR REINFORCEMENT - SHORT WHEEL BASE ONLY	165
OUTER WHEELHOUSE - SHORT WHEEL BASE ONLY	166
BODY SIDE APERTURE RIGHT SIDE- LONG WHEEL BASE ONLY	167
BODY SIDE APERTURE LEFT SIDE - LONG WHEEL BASE ONLY	168
BODY SIDE APERTURE RIGHT SIDE - SHORT WHEEL BASE ONLY	169
BODY SIDE APERTURE LEFT SIDE - SHORT WHEEL BASE ONLY	170
LOWER SLIDING DOOR TRACK	171
LIFTGATE UPPER FRAME	172
UPPER WINDSHIELD FRAME	173
FRONT FENDER SHIELD BEAM	174
FRONT FENDER SHIELD BEAM/COWL SIDE PANEL	175
HINGE PILLAR REINFORCEMENT	176
INNER SIDE SILL - LONG WHEEL BASE ONLY	177
INNER SIDE SILL/OUTER SIDE SILL - LONG WHEEL BASE ONLY	178
LOWER SLIDING DOOR TRACK REINFORCEMENT - LONG WHEEL BASE ONLY	179
UPPER WINDSHIELD FRAME/ROOF PANEL - LONG WHEEL BASE ONLY	180
ROOF BOWS/INNER ROOF SIDE RAILS	181
OUTER ROOF PANEL - LONG WHEEL BASE ONLY	182
INNER SIDE SILL - SHORT WHEEL BASE ONLY	183
INNER/OUTER SIDE SILLS - SHORT WHEEL BASE ONLY	184
LOWER SLIDING DOOR TRACK - SHORT WHEEL BASE ONLY	185
UPPER WINDSHIELD FRAME/OUTER ROOF PANEL - SHORT WHEEL BASE ONLY	186
REAR SUSPENSION HANGERS - LONG WHEEL BASE SHOWN, SHORT WHEEL BASE TYPICAL	187
FRONT LOWER LIFTGATE OPENING	188
REAR JACKING REINFORCEMENT - LONG WHEEL BASE ONLY	189
INNER WHEELHOUSE - LONG WHEEL BASE ONLY	190
SUSPENSION HANGER REINFORCEMENT - LONG WHEEL BASE ONLY	191
LOWER LIFTGATE OPENING PANEL - LONG WHEEL BASE ONLY	192
ROOF BOWS/UPPER LIFTGATE FRAME - LONG WHEEL BASE ONLY	193
BODY SIDE APERTURE/INNER QUARTER PANEL - LONG WHEEL BASE ONLY	194
REAR JACKING REINFORCEMENT - SHORT WHEEL BASE ONLY	195
INNER WHEELHOUSE/INNER QUARTER PANEL - SHORT WHEEL BASE ONLY	196
SUSPENSION HANGER REINFORCEMENT - SHORT WHEEL BASE ONLY	197
LOWER LIFTGATE OPENING - SHORT WHEEL BASE ONLY	198
ROOF PANEL/ROOF RAIL - SHORT WHEEL BASE ONLY	199
RIGHT SIDE OUTER REAR WHEELHOUSE, EXTENSION AND BODY SIDE APERTURE - SHORT WHEEL BASE ONLY	200

WELD LOCATIONS (Continued)

DESCRIPTION	FIGURE
UPPER COWL PLENUM AND REINFORCEMENT - RIGHT HAND DRIVE	201
COWL SIDE PANEL AND DASH PANEL - RIGHT HAND DRIVE	202
LOWER COWL PLENUM, SUPPORT AND DASH PANEL - RIGHT HAND DRIVE	203
STEERING COLUMN REINFORCEMENT, BELT REINFORCEMENT AND DASH PANEL - RIGHT HAND DRIVE	204
INSTRUMENT PANEL TAPPING PLATE AND COWL SIDE PANEL - RIGHT HAND DRIVE	205
DASH PANEL AND BELT REINFORCEMENT - RIGHT HAND DRIVE	206
UPPER SUPPORT, UPPER REINFORCEMENT AND UPPER COWL PLENUM - RIGHT HAND DRIVE	207
UPPER SUPPORT, BRAKE PEDAL BRACKET REINFORCEMENT AND DASH PANEL - RIGHT HAND DRIVE	208
REINFORCEMENT, MOUNTING BRACKETS AND DASH PANEL - RIGHT HAND DRIVE	209
STRUT TOWER, COWL SIDE PANEL - RIGHT HAND DRIVE	210
REINFORCEMENTS, SIDE RAILS, COWL SIDE PANELS AND DASH PANEL - RIGHT HAND DRIVE	211
UPPER COWL PLENUM, GUSSETS, SIDE SHIELDS AND BODY SIDE APERTURE - RIGHT HAND DRIVE	212
SIDE GLASS ANTENNA TAPPING PLATE AND INNER BODY SIDE APERTURE - RIGHT HAND DRIVE	213

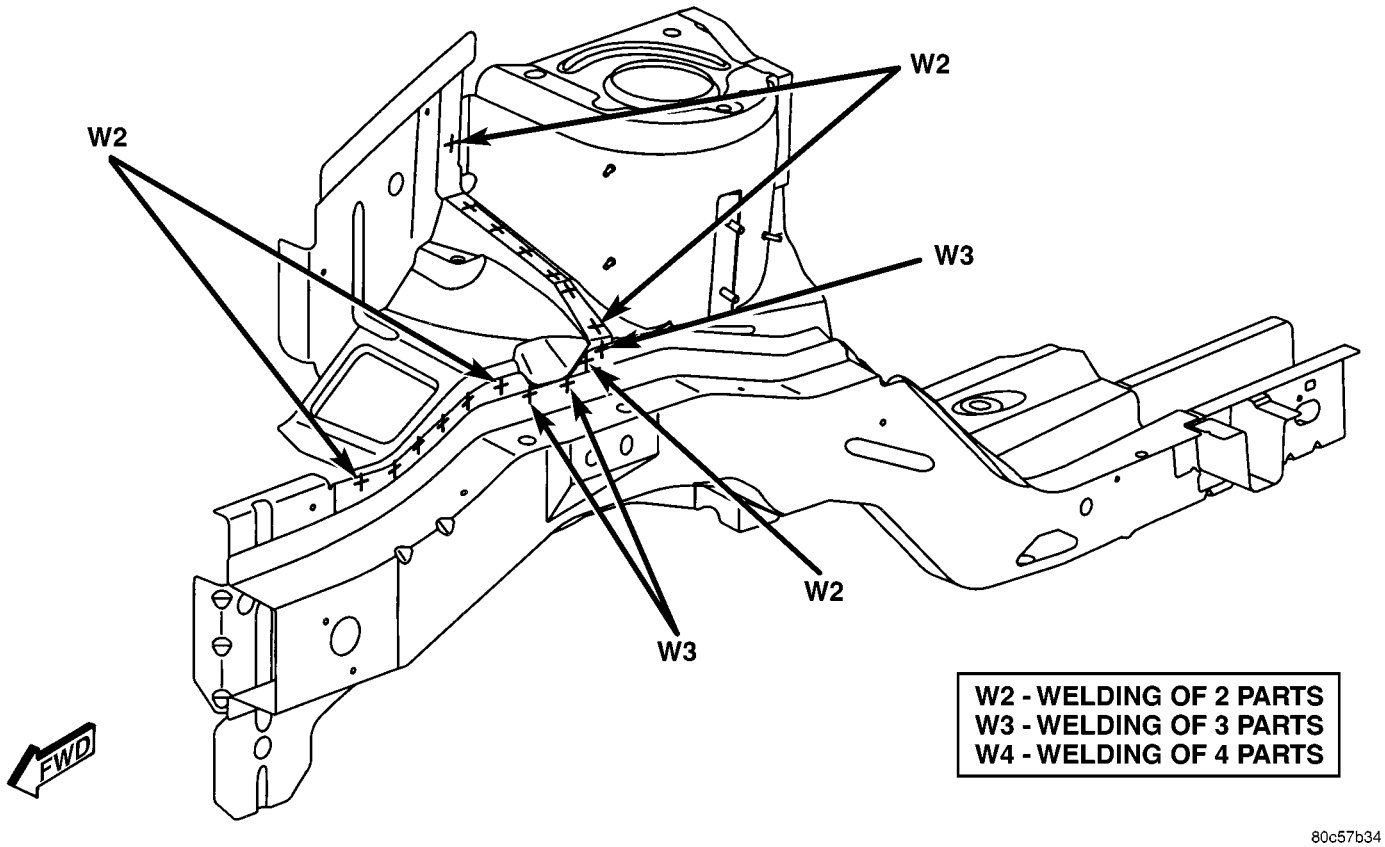

Fig. 85 FRONT FENDER SHIELD - RIGHT

WELD LOCATIONS (Continued)

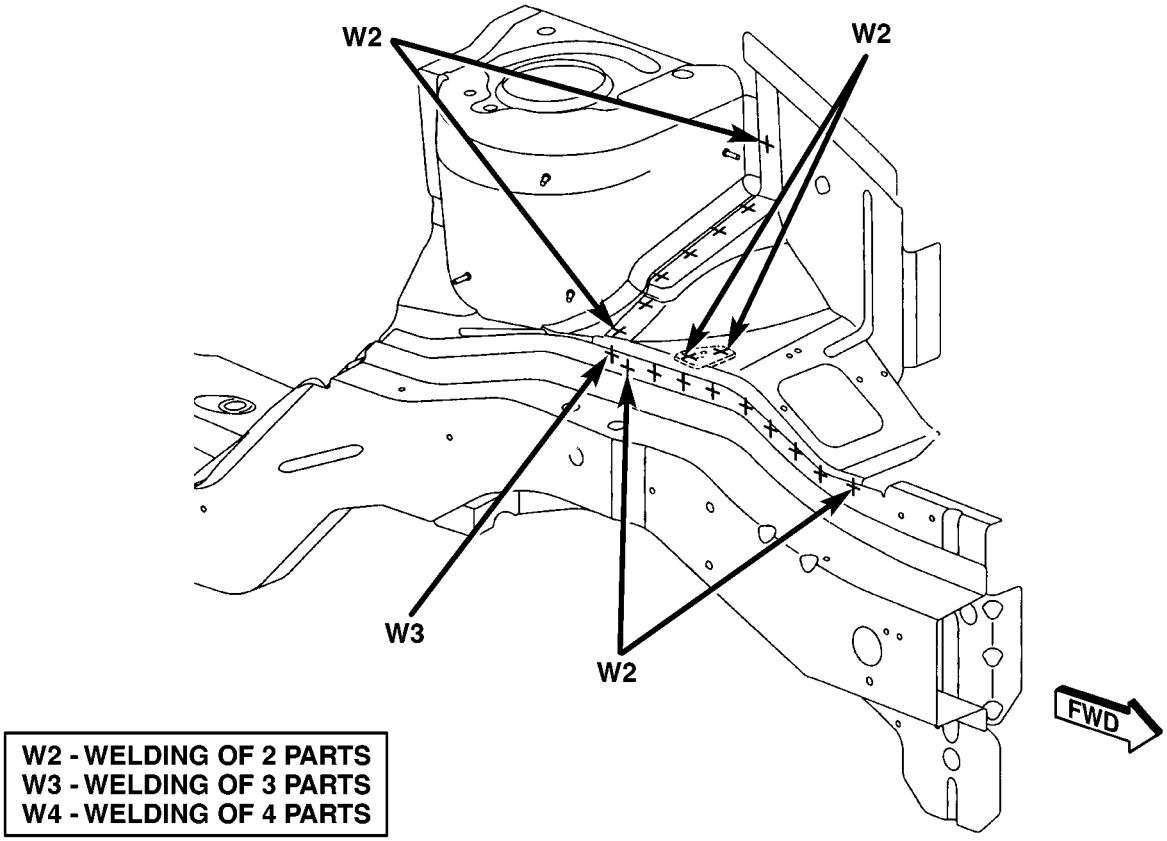

Fig. 86 FRONT FENDER SHIELD - LEFT

WELD LOCATIONS (Continued)

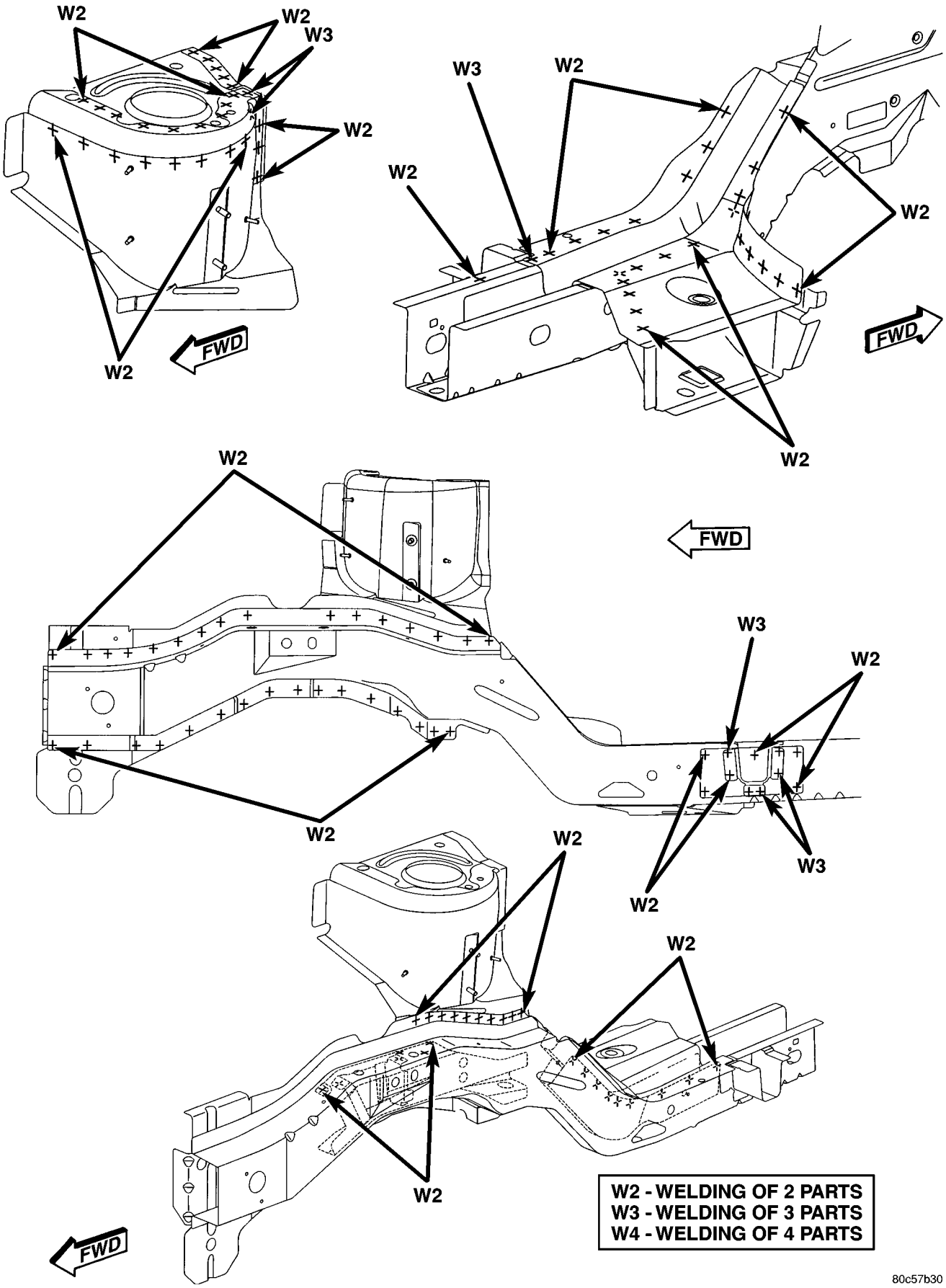

Fig. 87 STRUT TOWER AND REINFORCEMENTS - RIGHT

WELD LOCATIONS (Continued)

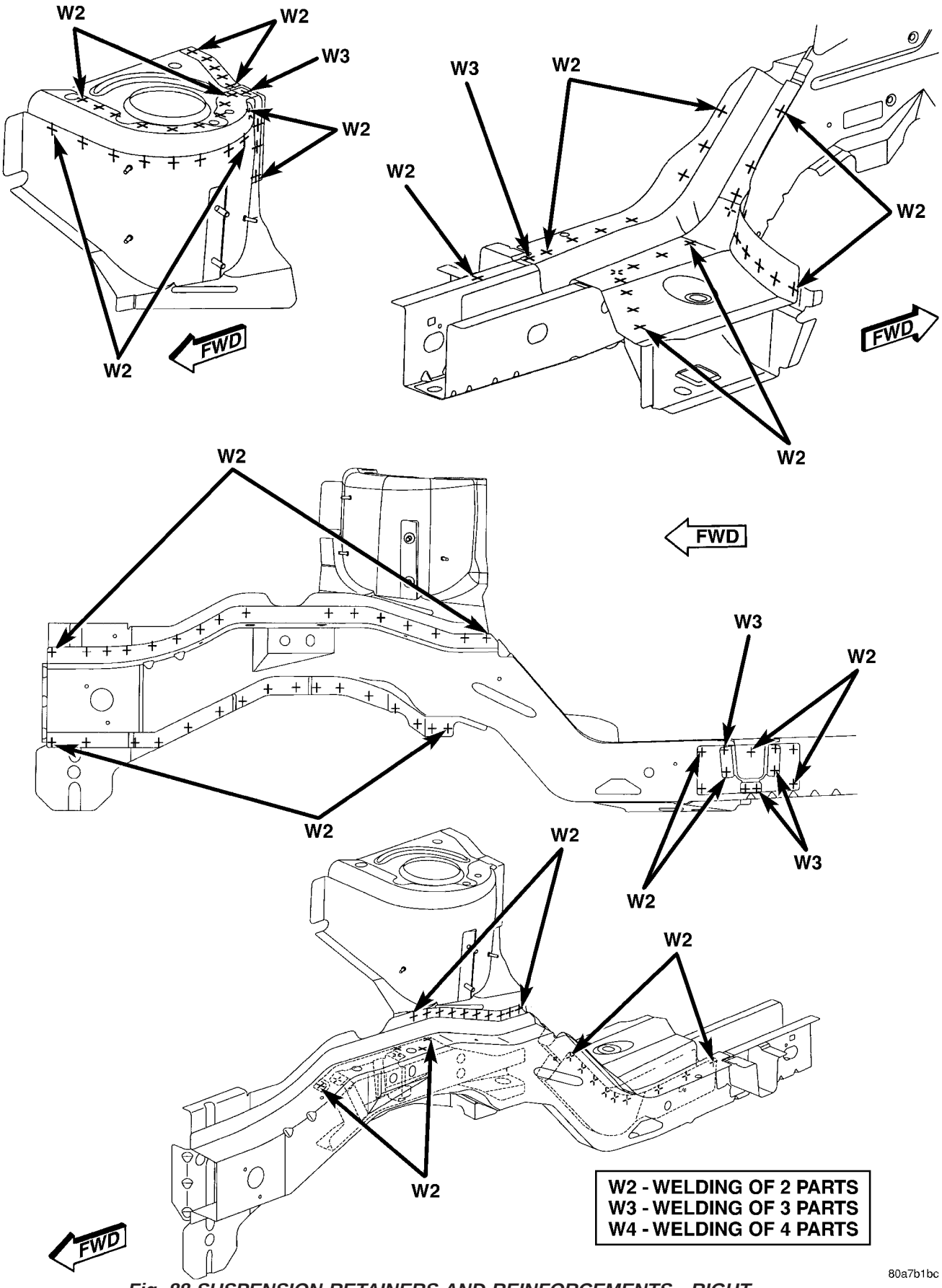

Fig. 88 SUSPENSION RETAINERS AND REINFORCEMENTS - RIGHT

WELD LOCATIONS (Continued)

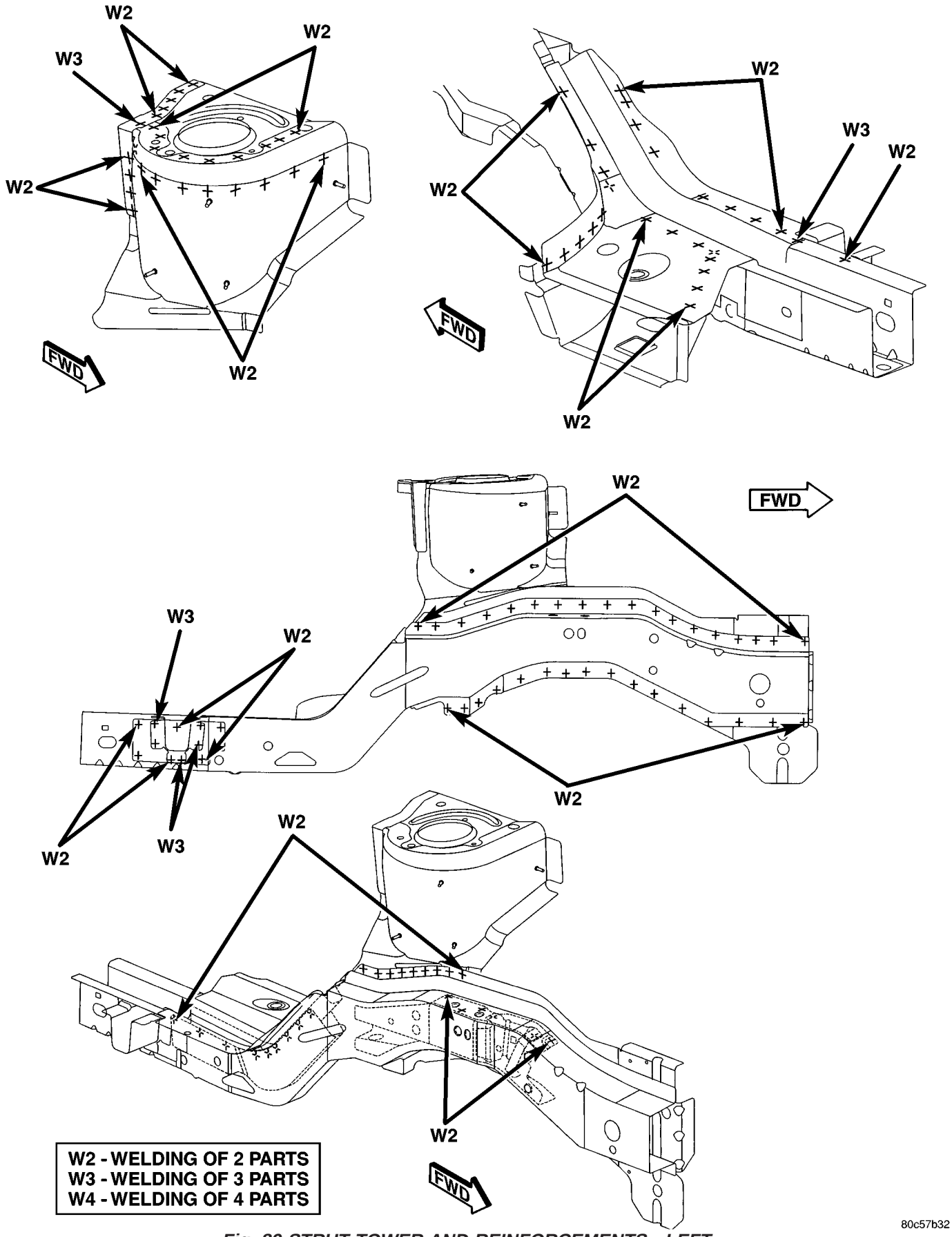

Fig. 89 STRUT TOWER AND REINFORCEMENTS - LEFT

WELD LOCATIONS (Continued)

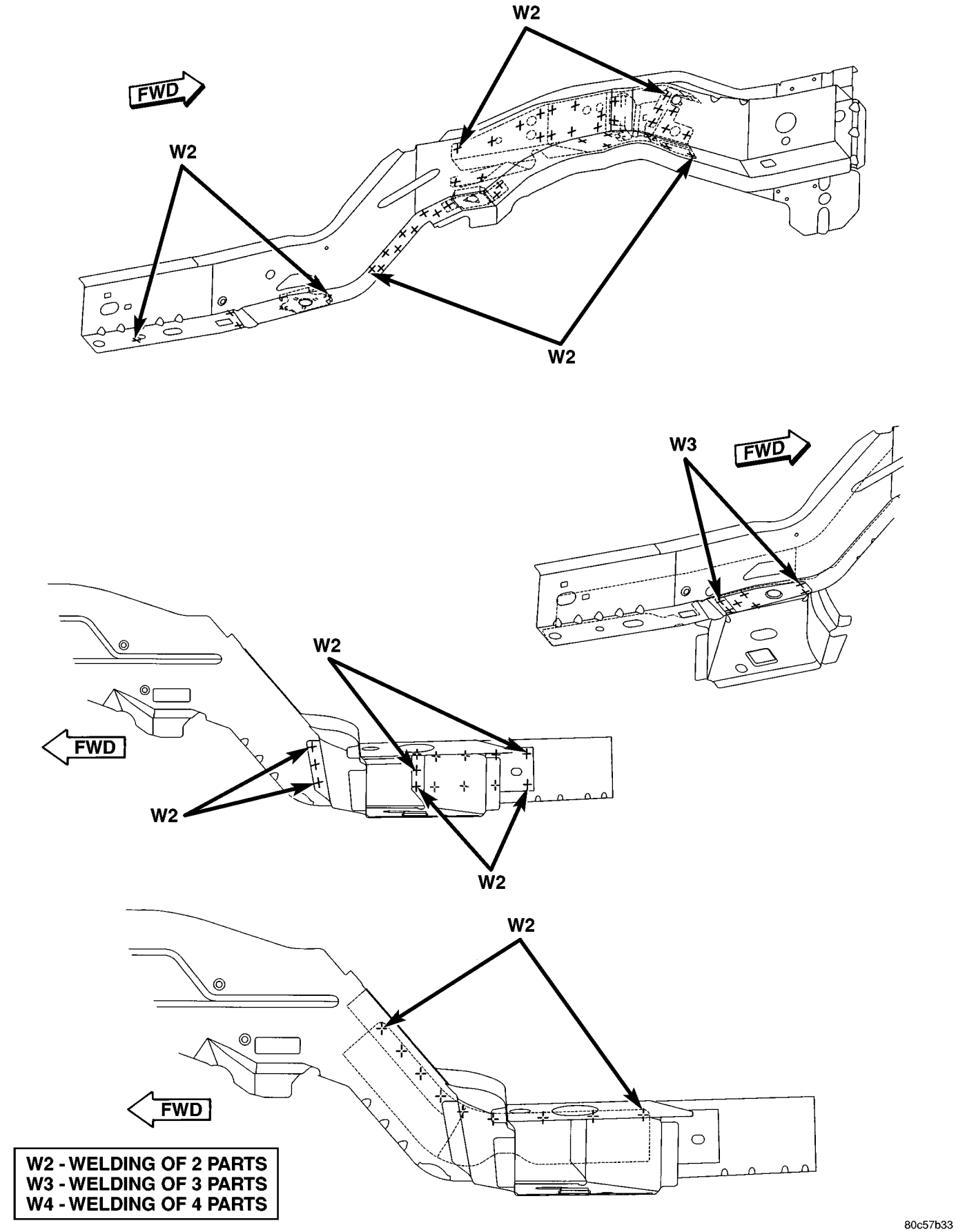

Fig. 90 SUSPENSION RETAINERS AND REINFORCEMENTS - LEFT

WELD LOCATIONS (Continued)

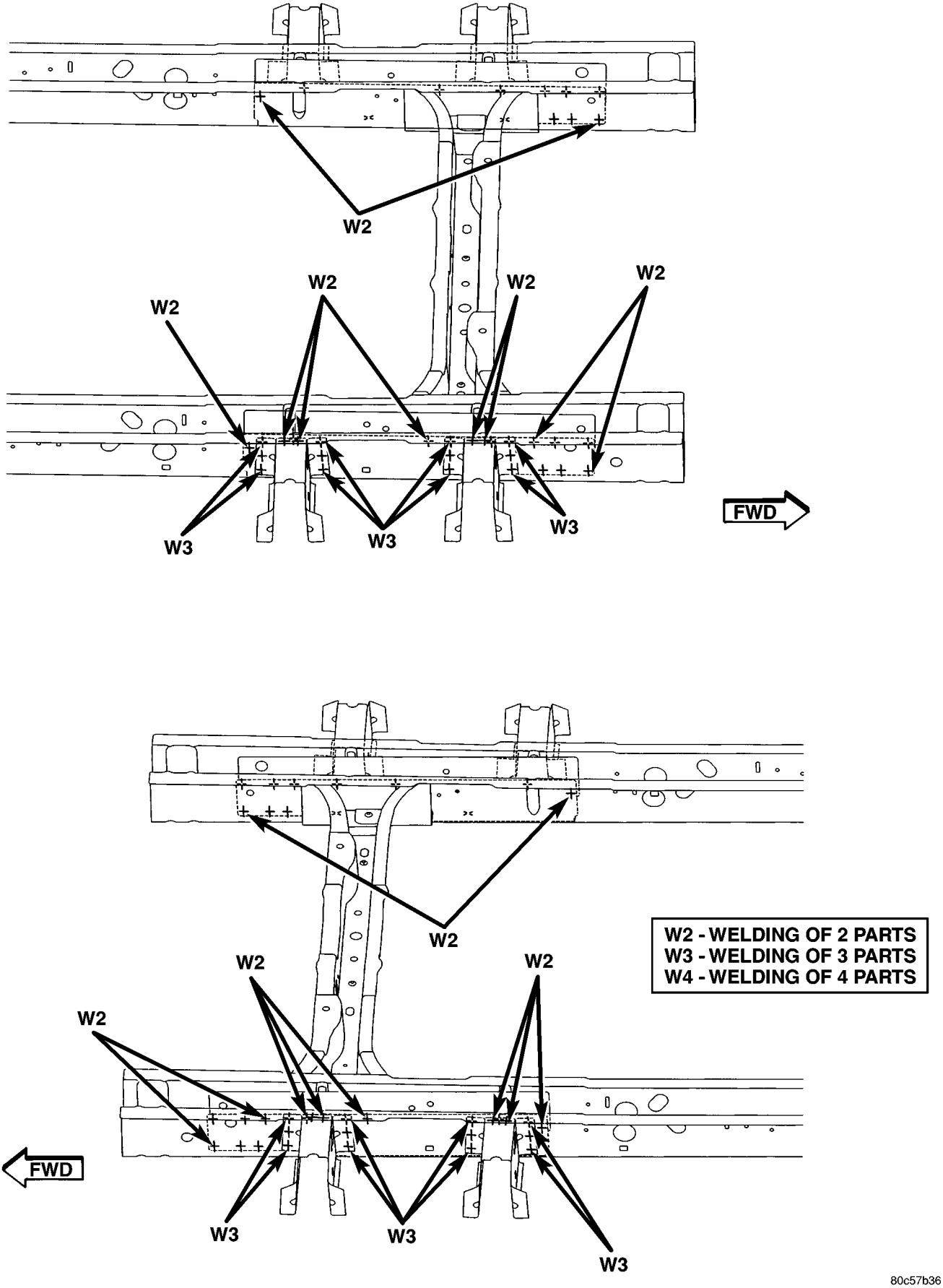

Fig. 91 FLOOR PAN REINFORCEMENTS - SIDE RAILS

WELD LOCATIONS (Continued)

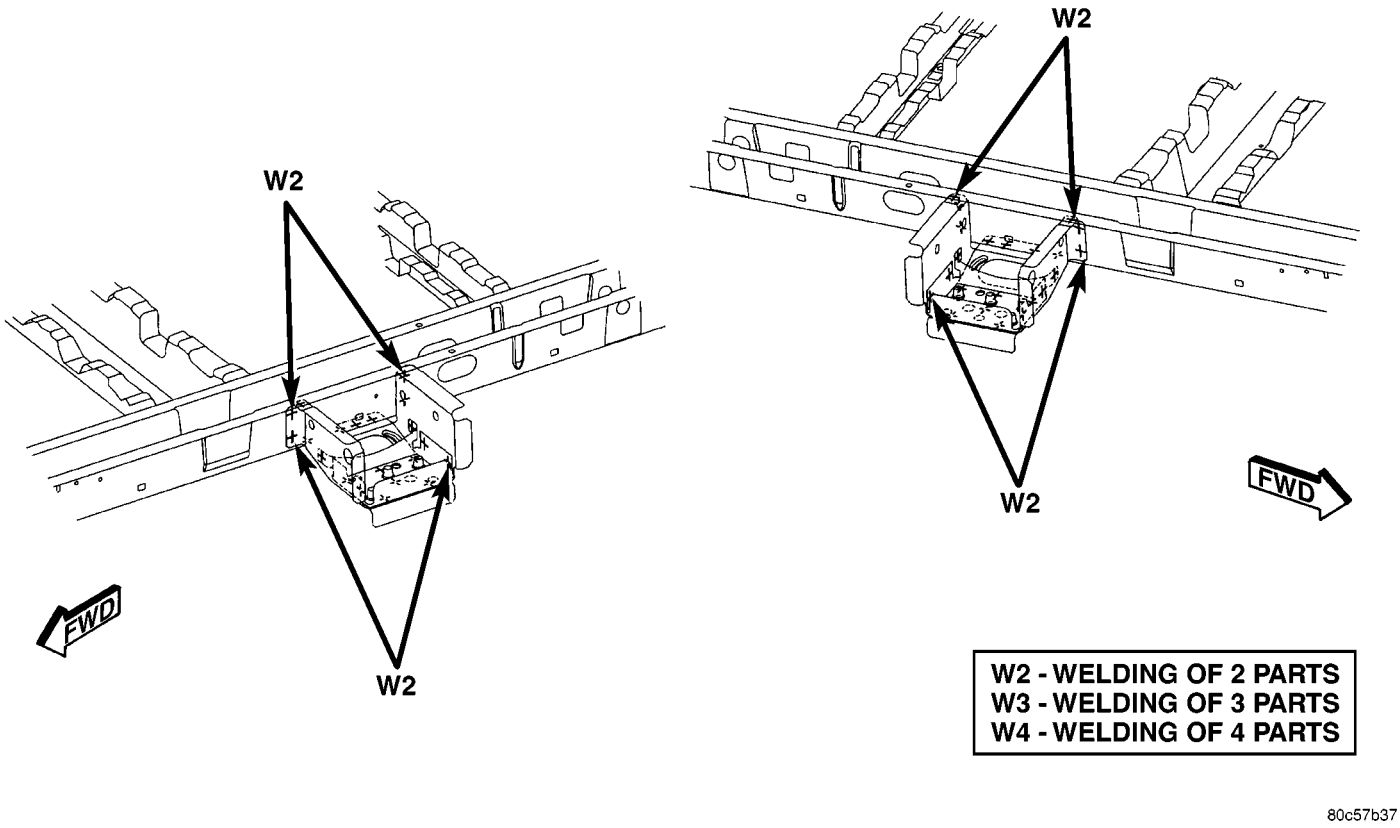

Fig. 92 REAR SUSPENSION BRACKETS

WELD LOCATIONS (Continued)

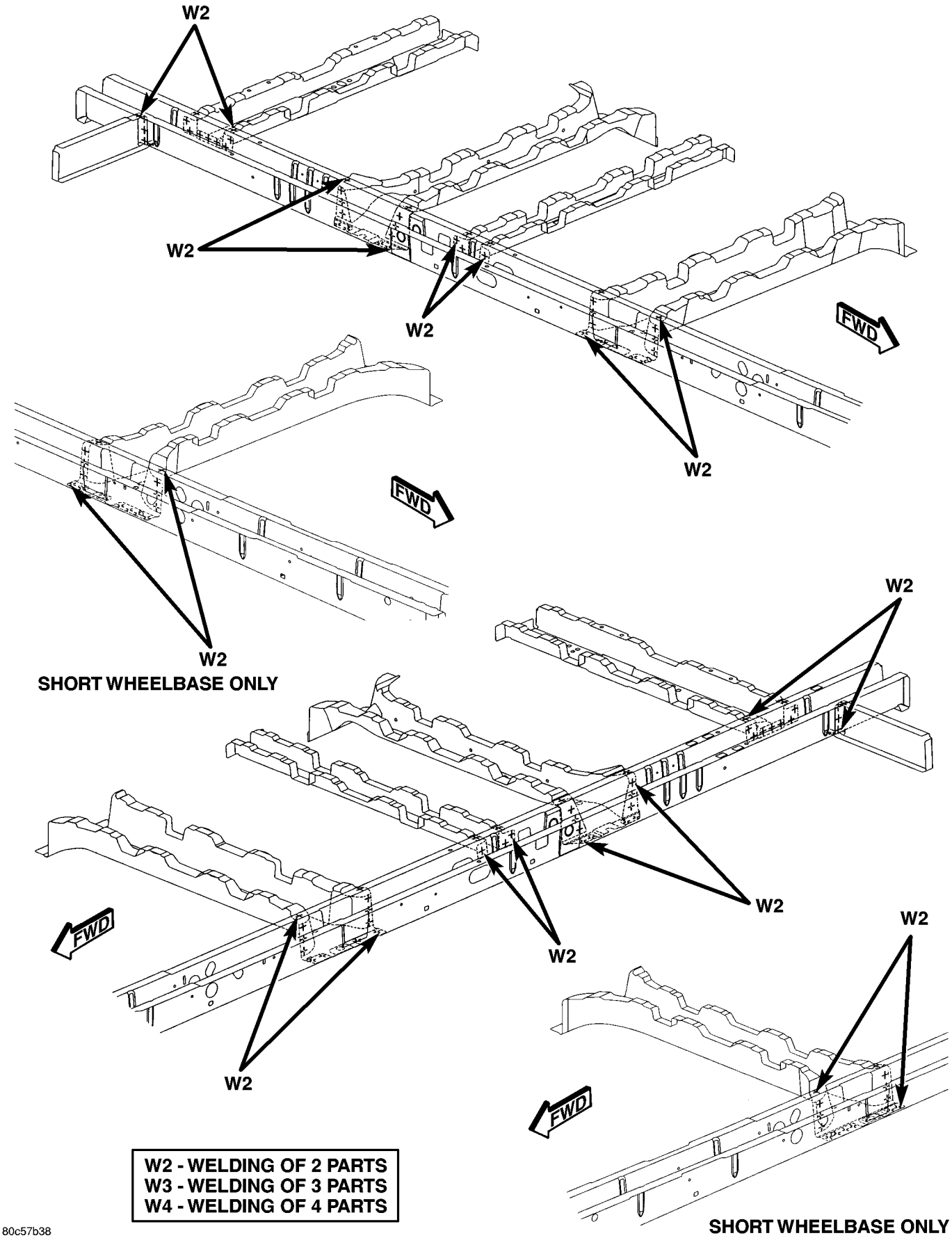

Fig. 93 FLOOR PAN CROSS MEMBERS

WELD LOCATIONS (Continued)

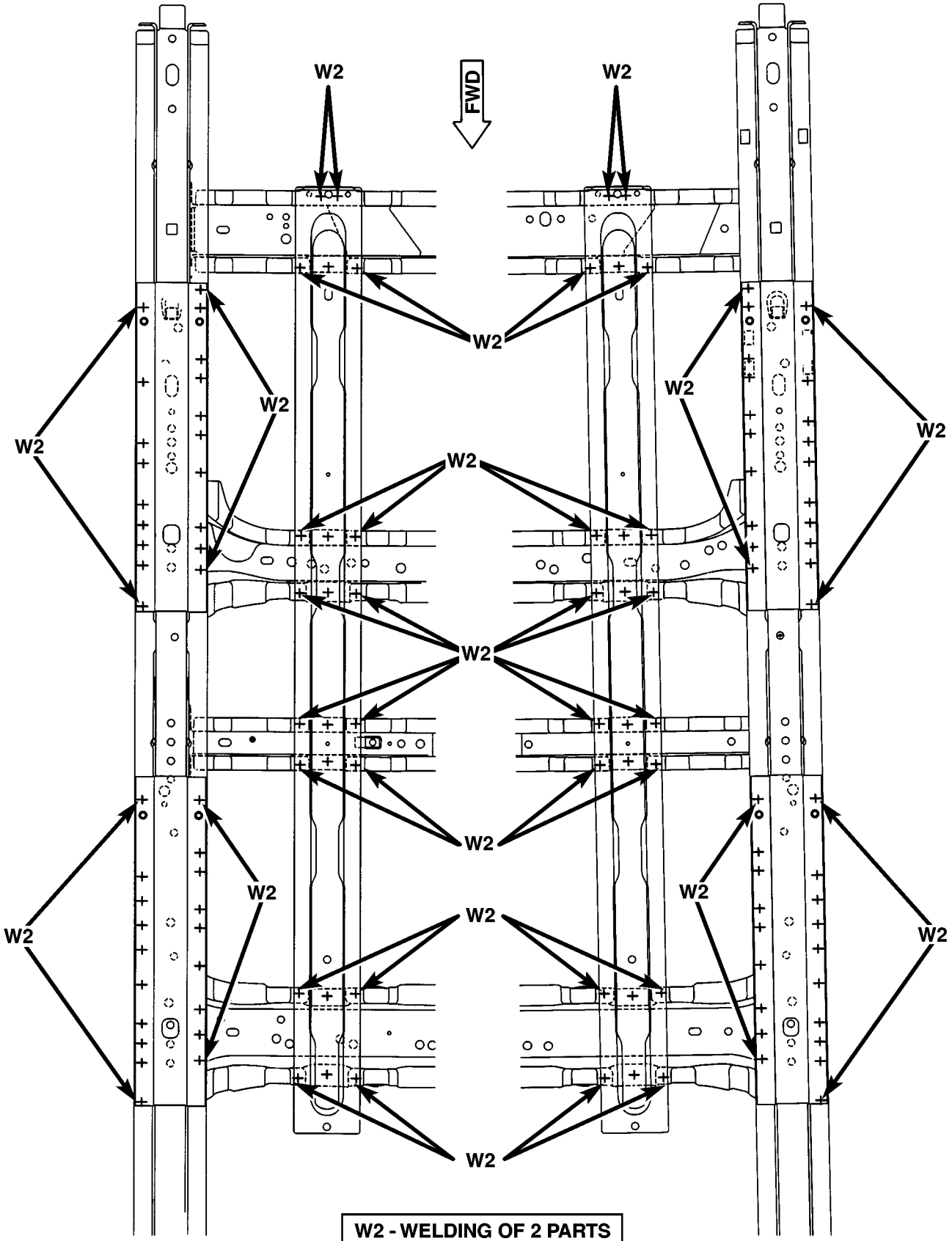

80c57b39

Fig. 94 SEAT REINFORCEMENTS - LONG WHEEL BASE ONLY

WELD LOCATIONS (Continued)

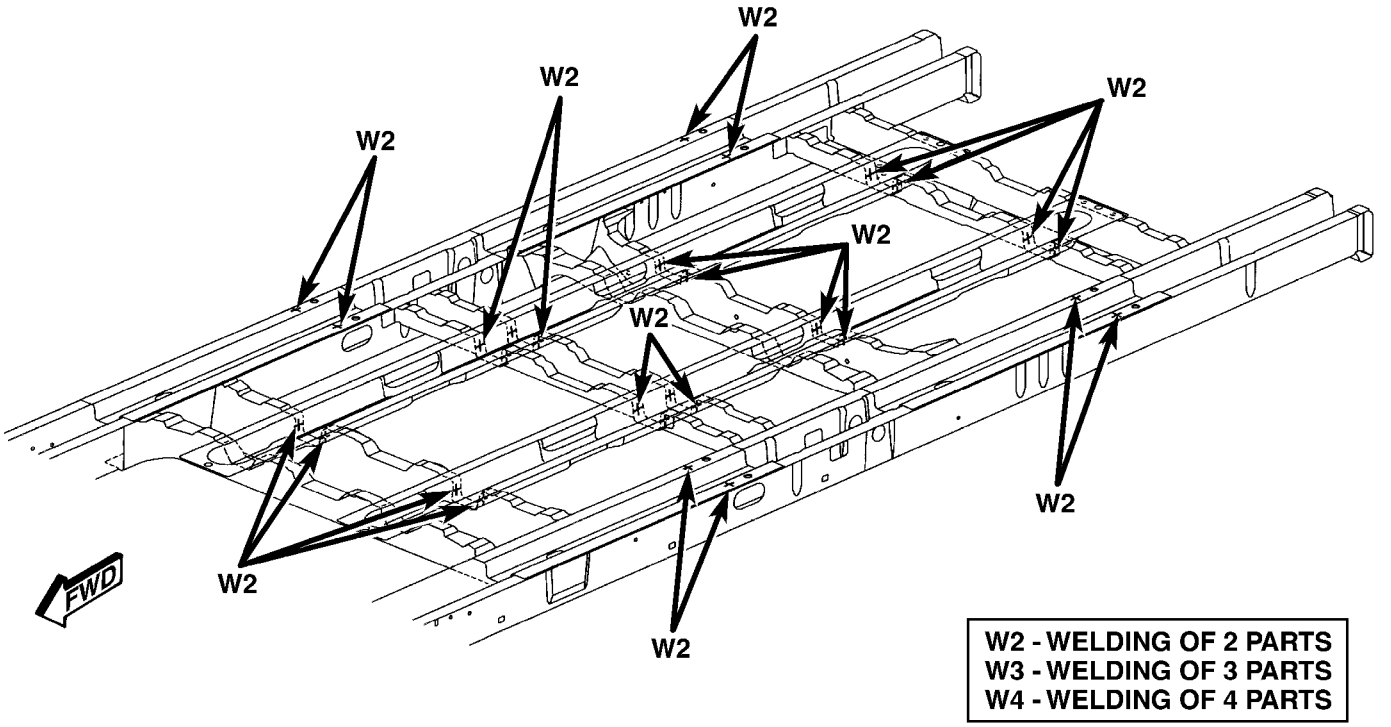

Fig. 95 STRIKER REINFORCEMENTS - LONG WHEEL BASE ONLY

WELD LOCATIONS (Continued)

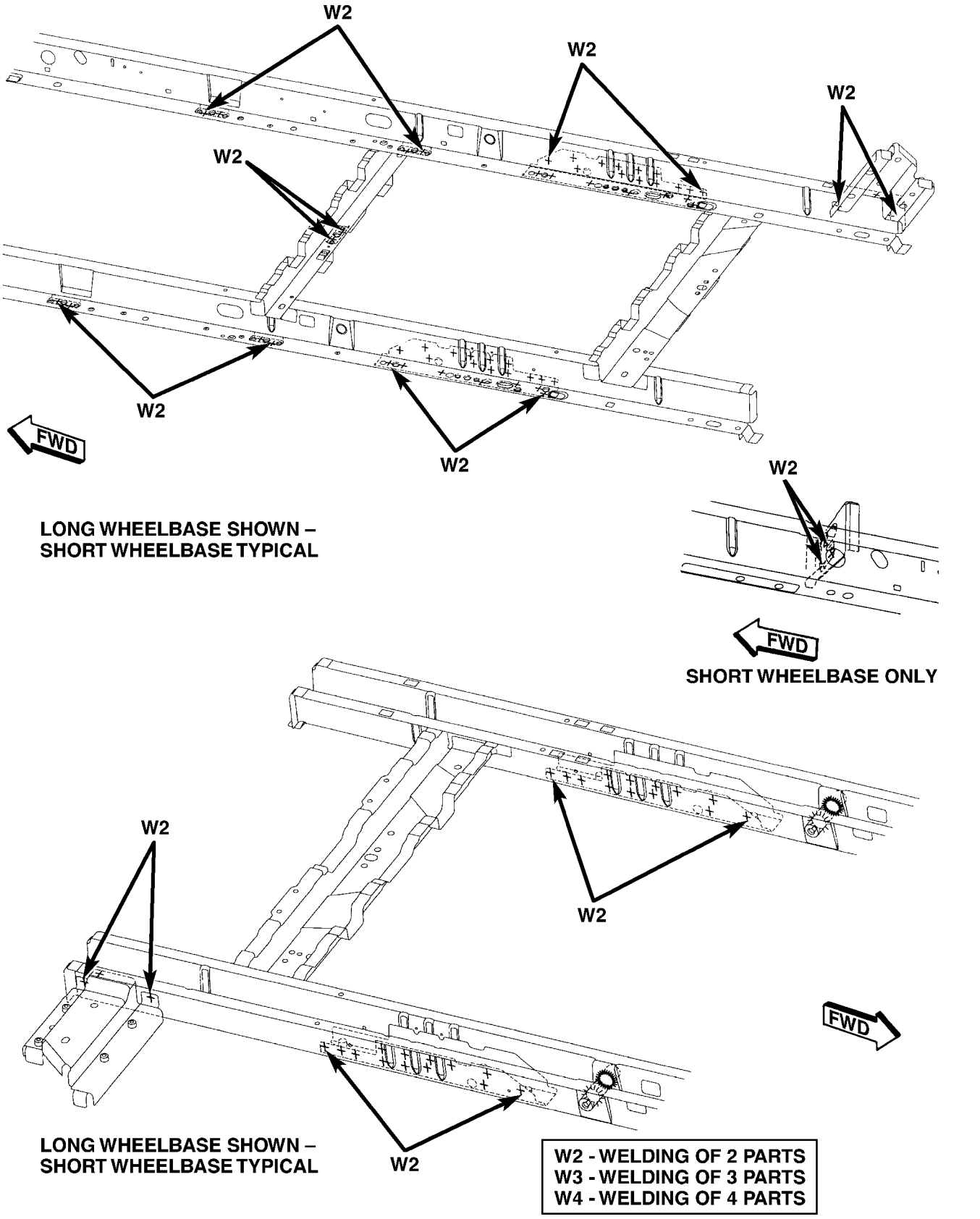

Fig. 96 FUEL TANK MOUNTING/REAR SEAT AND SUSPENSION

WELD LOCATIONS (Continued)

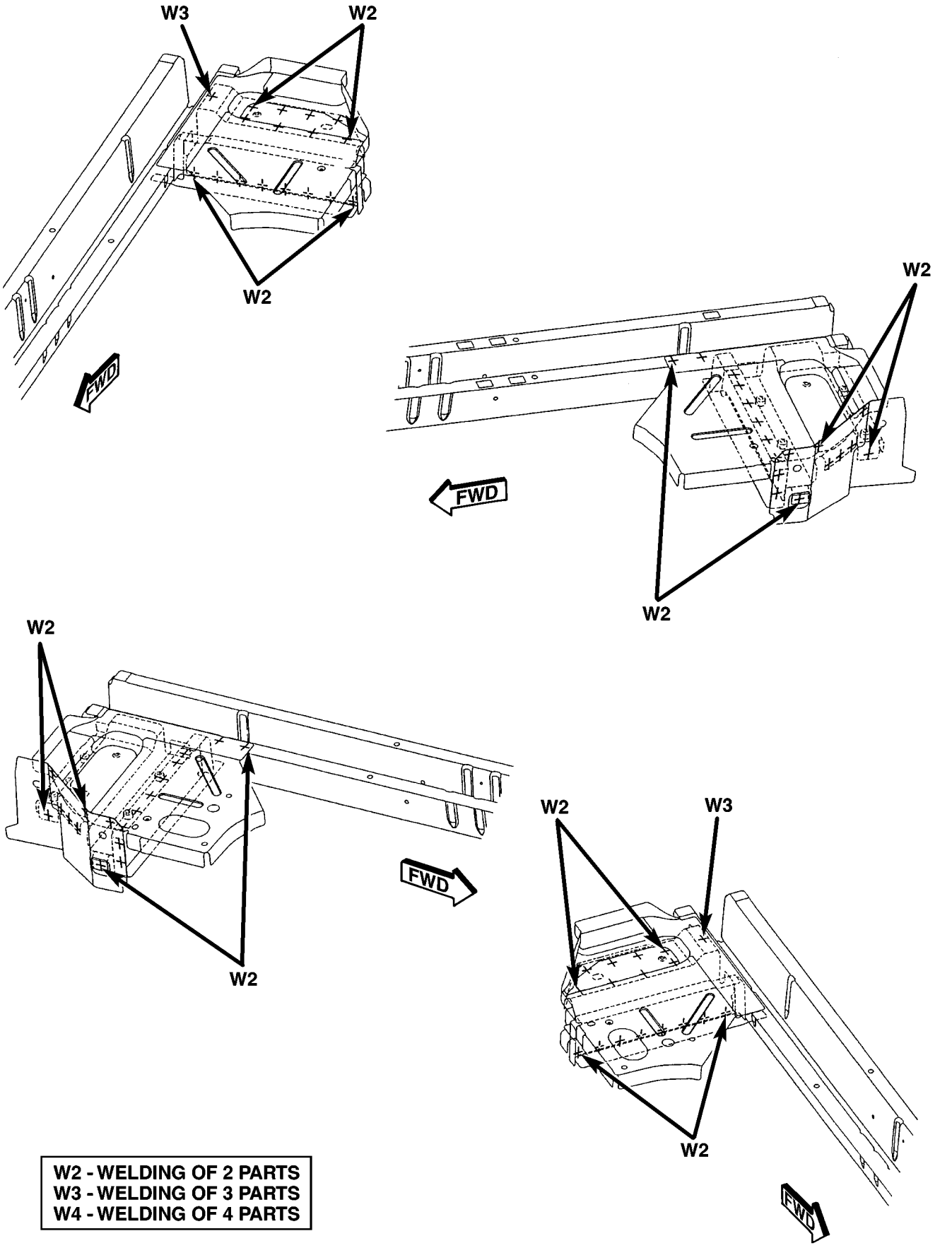

Fig. 97 REAR SUSPENSION HANGER BRACKETS - LONG WHEEL BASE

WELD LOCATIONS (Continued)

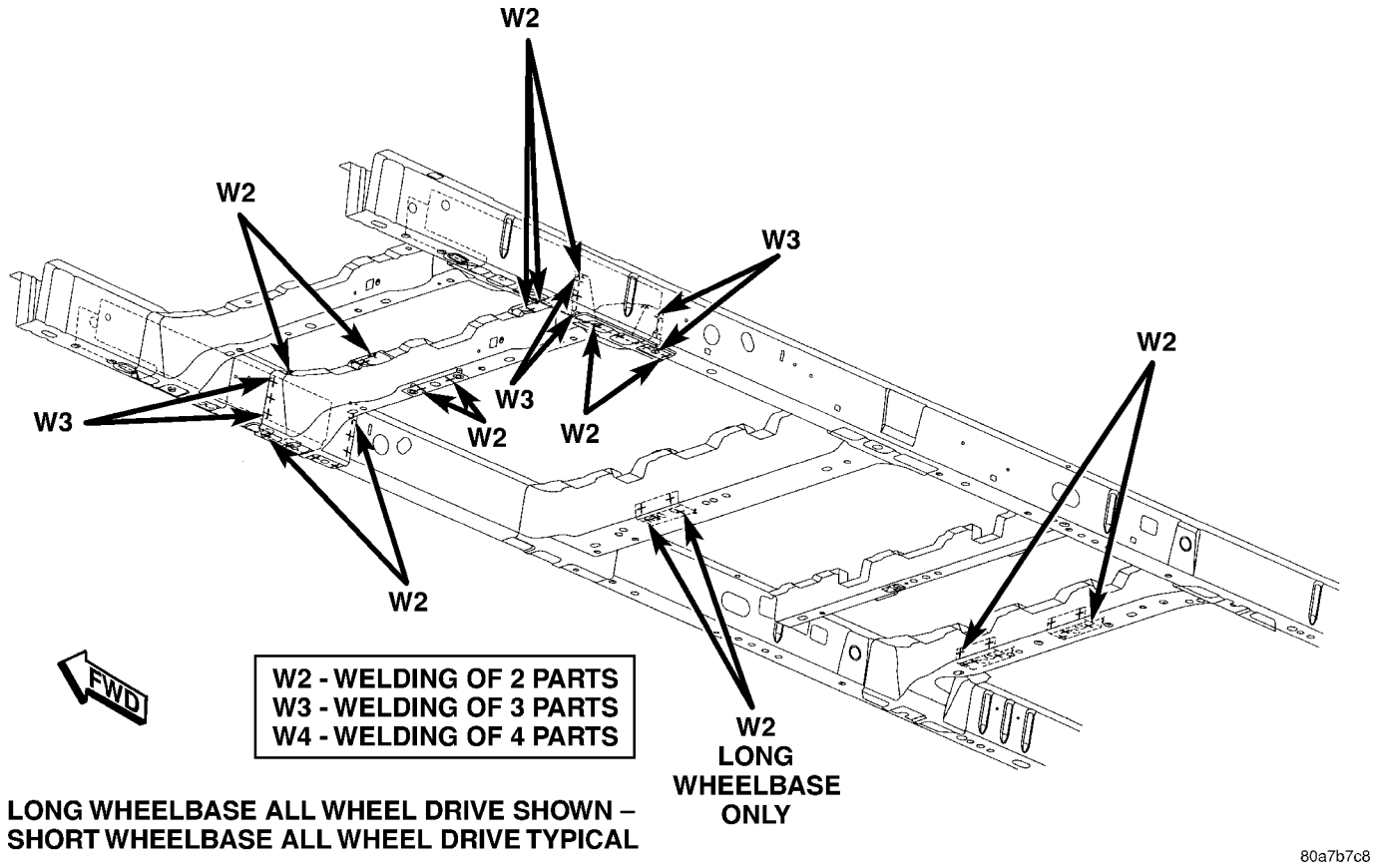

Fig. 98 FRONT SEAT CROSS MEMBER

WELD LOCATIONS (Continued)

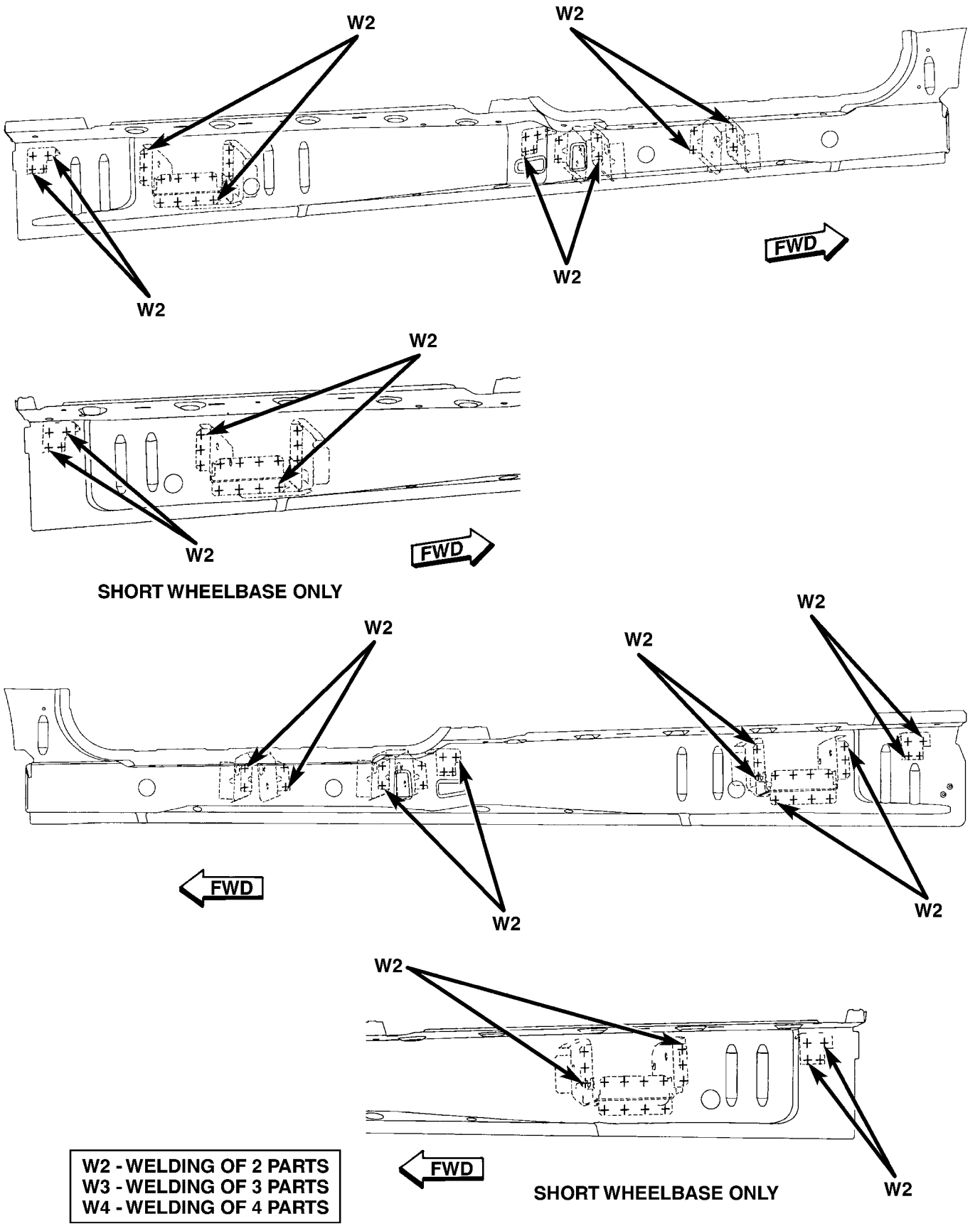

Fig. 99 FLOOR PAN SIDE RAIL REINFORCEMENT

WELD LOCATIONS (Continued)

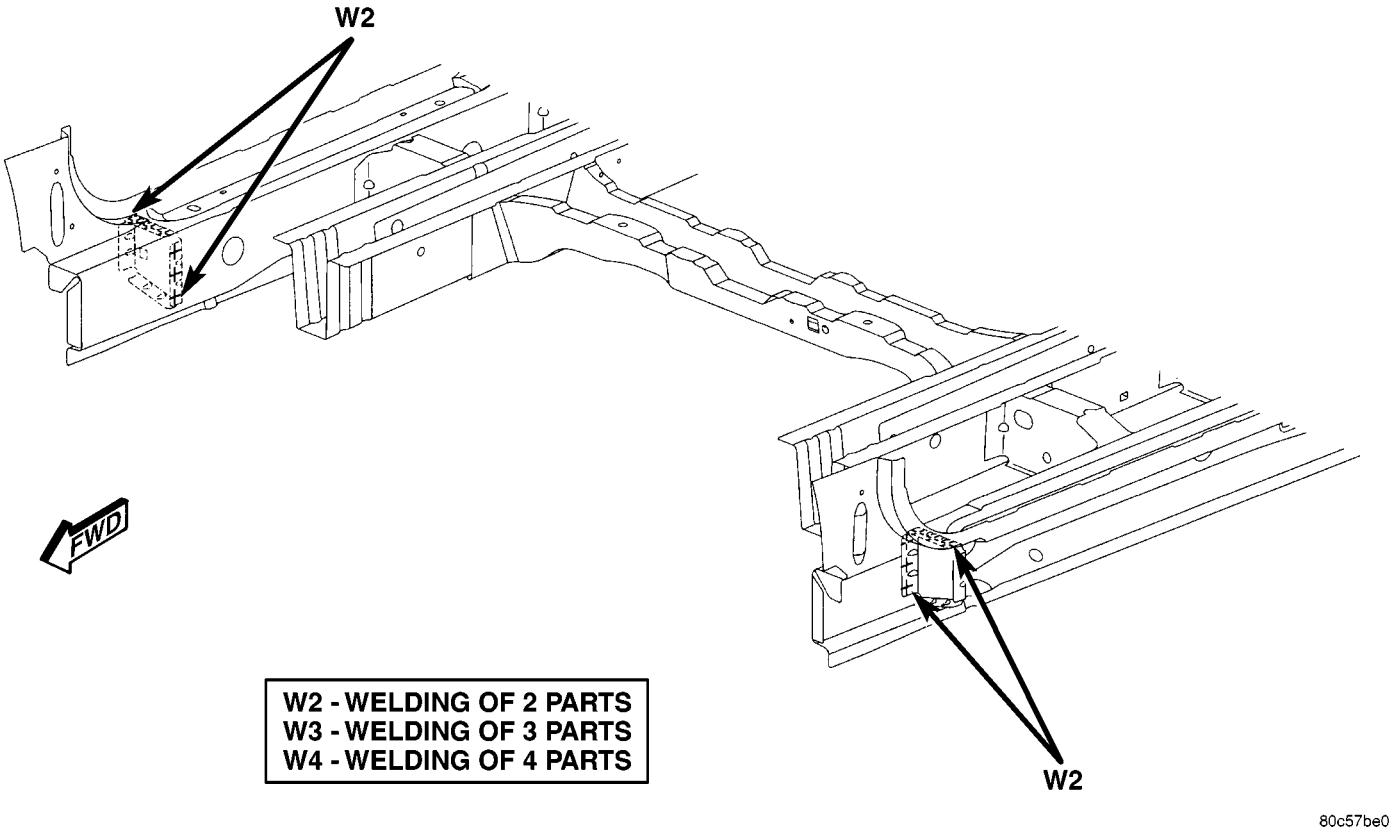

Fig. 100 SILL BULKHEAD REINFORCEMENTS

WELD LOCATIONS (Continued)

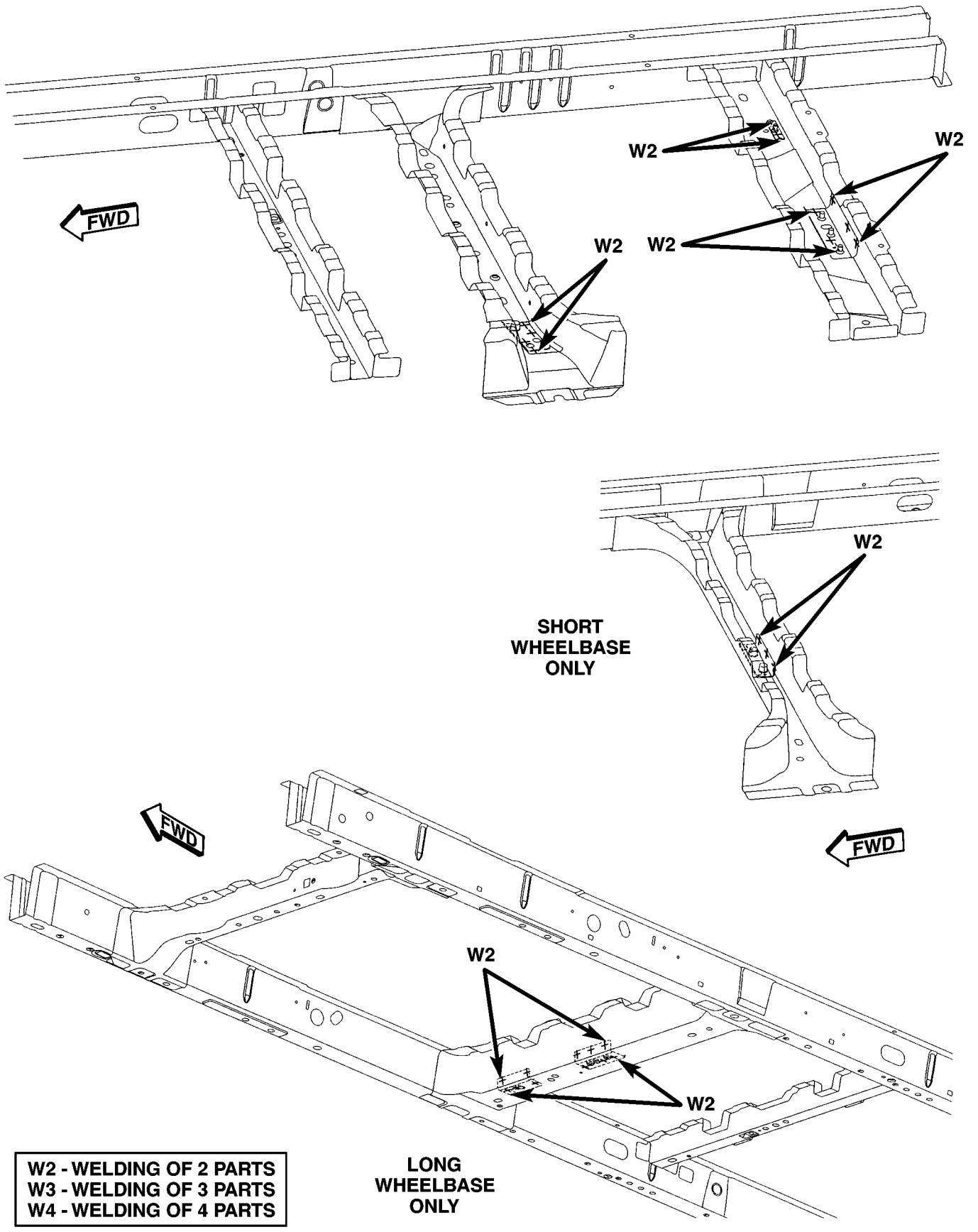

Fig. 101 FLOOR PAN CROSS MEMBER REINFORCEMENTS

WELD LOCATIONS (Continued)

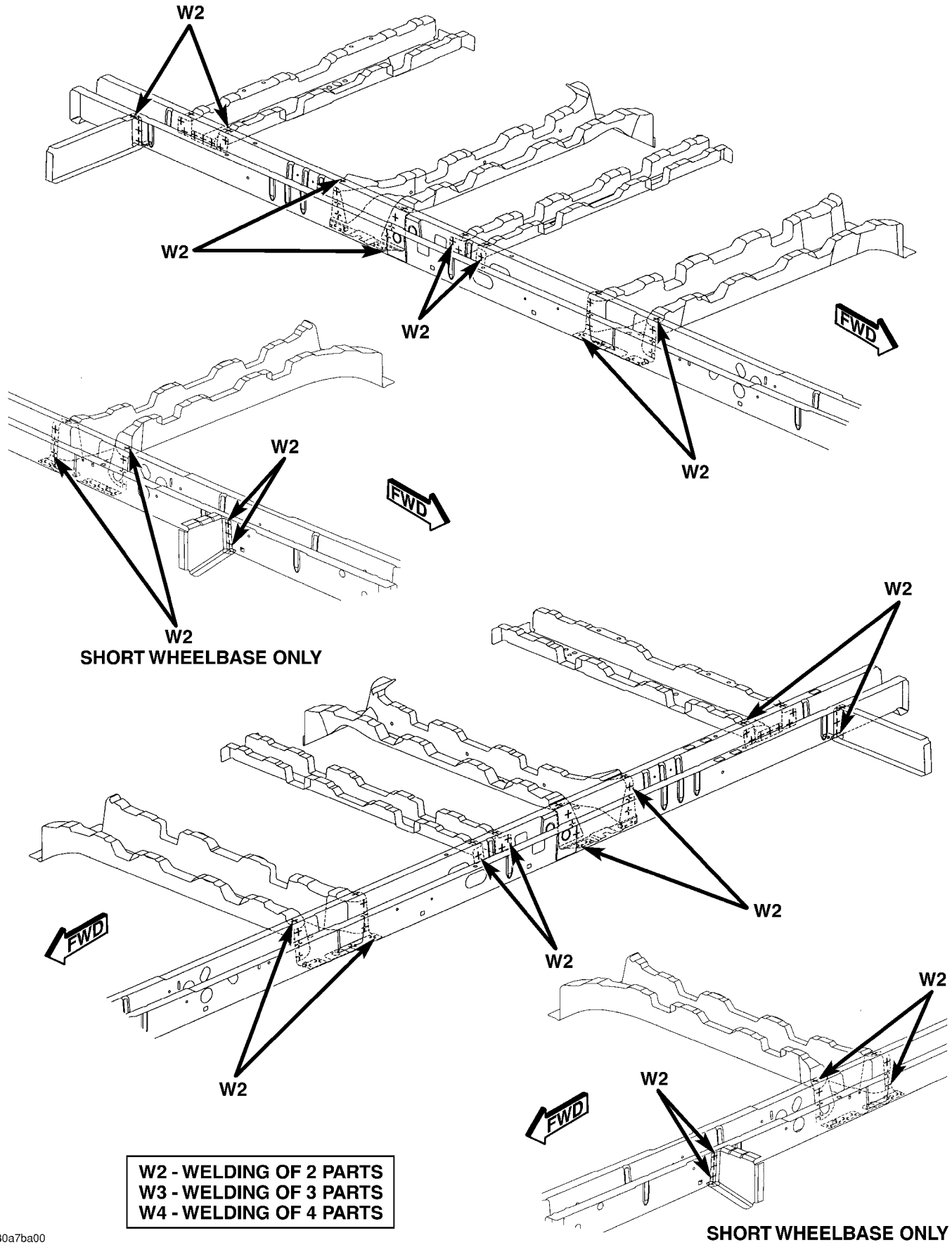

Fig. 102 FRONT SEAT CROSS MEMBERS

WELD LOCATIONS (Continued)

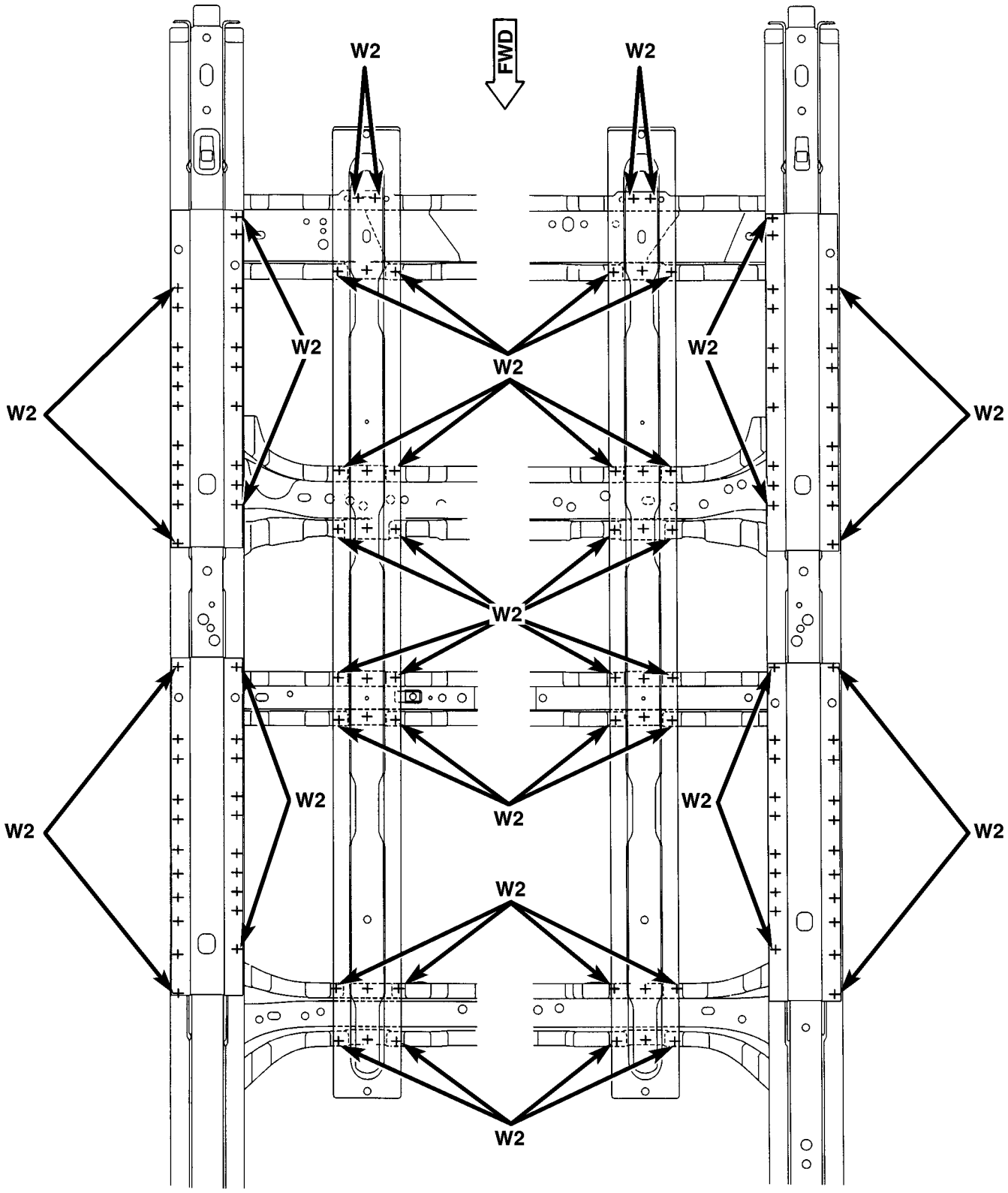

80c57be3

Fig. 103 SEAT REINFORCEMENT CROSS MEMBERS - SHORT WHEEL BASE

WELD LOCATIONS (Continued)

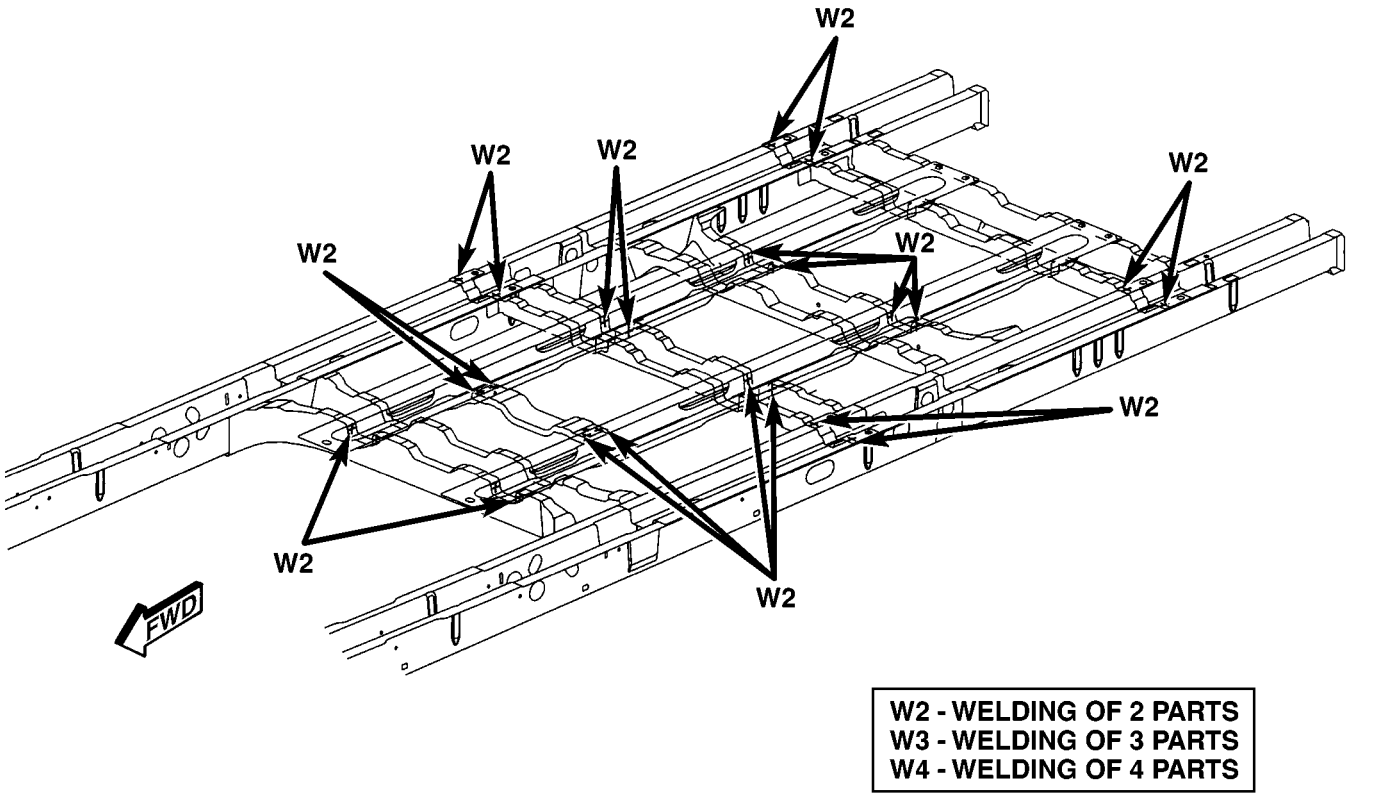

Fig. 104 CENTER CONSOLE REINFORCEMENT - SHORT WHEEL BASE

WELD LOCATIONS (Continued)

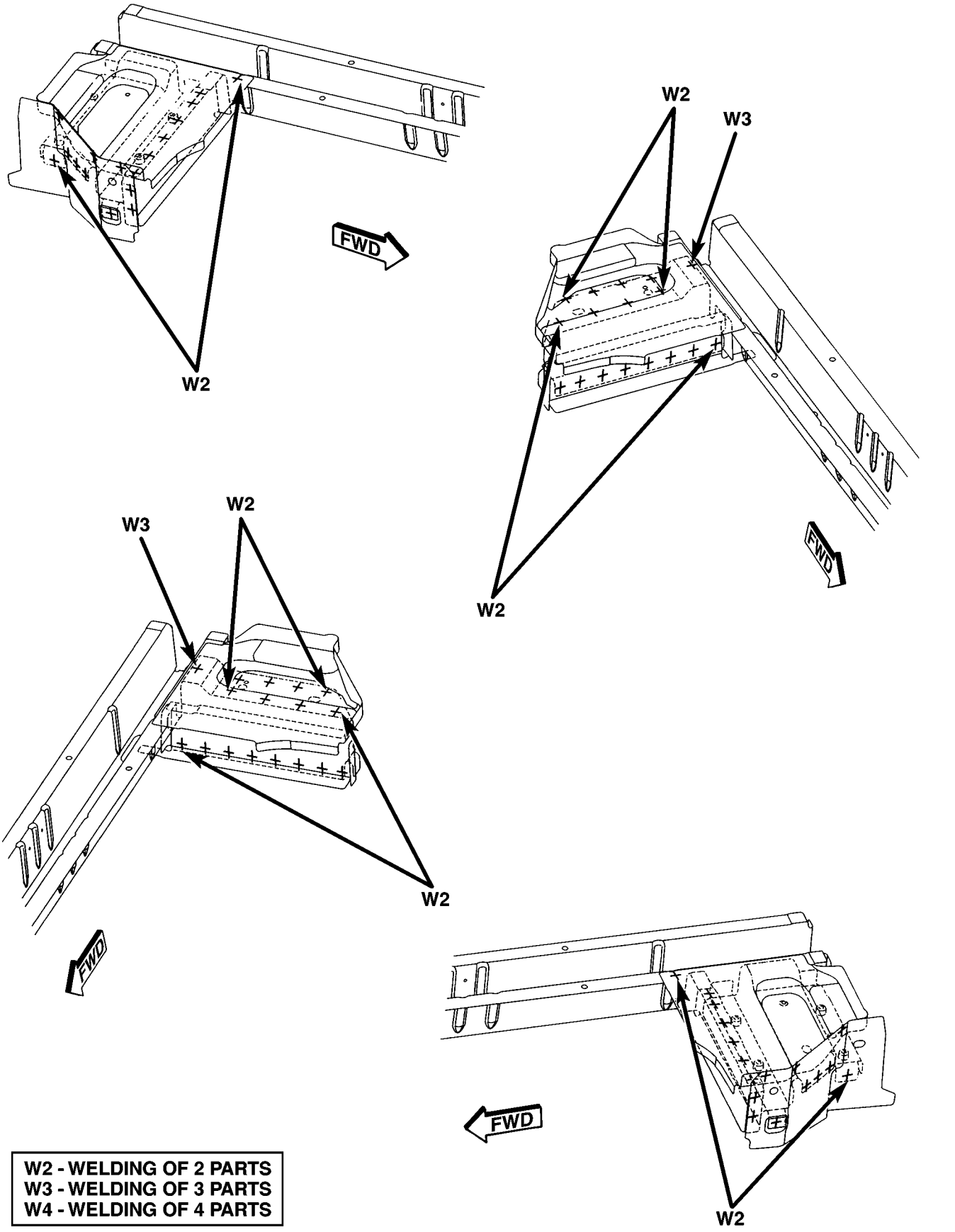

Fig. 105 REAR SUSPENSION HANGER BRACKETS - SHORT WHEEL BASE

WELD LOCATIONS (Continued)

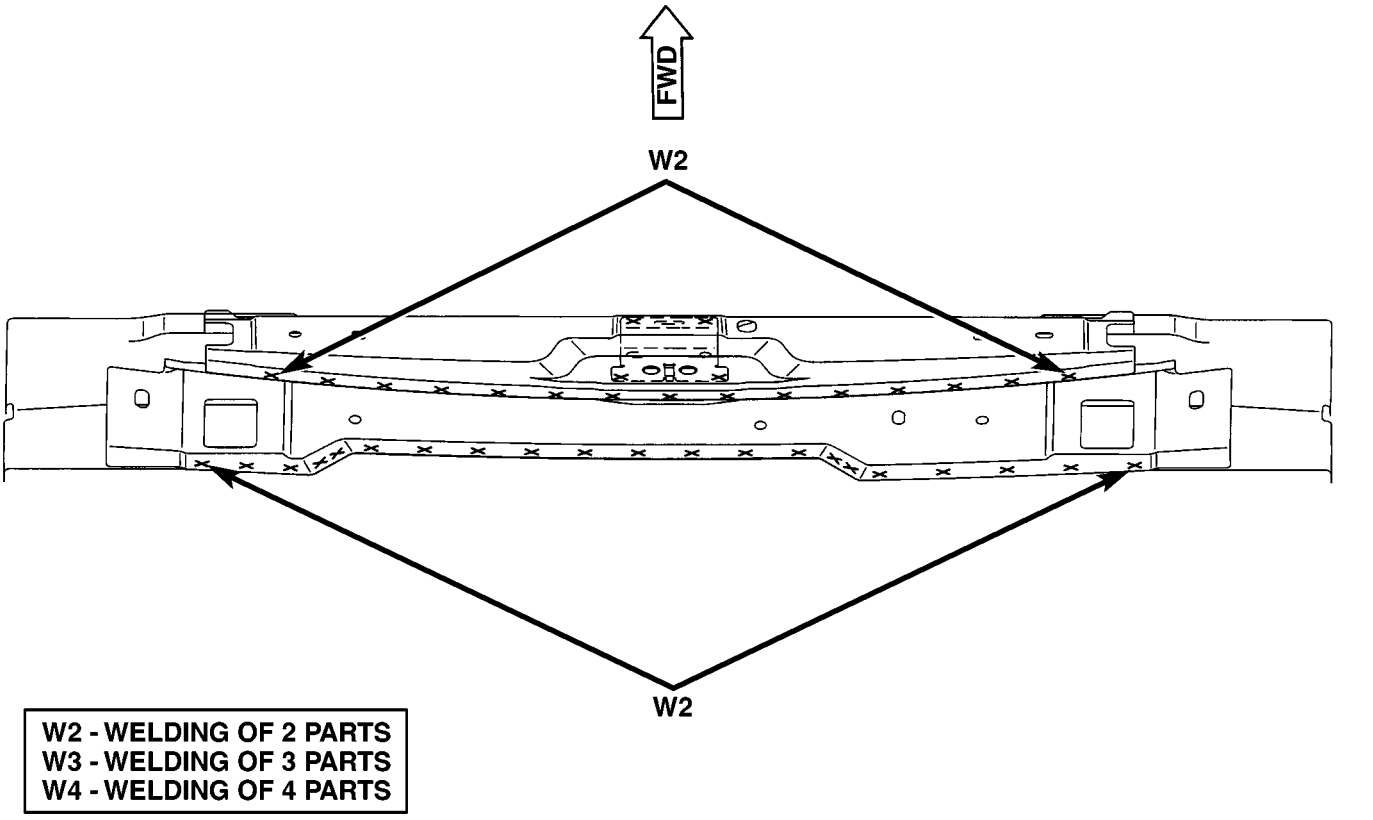

Fig. 106 LOWER LIFTGATE PANEL LATCH REINFORCEMENT

WELD LOCATIONS (Continued)

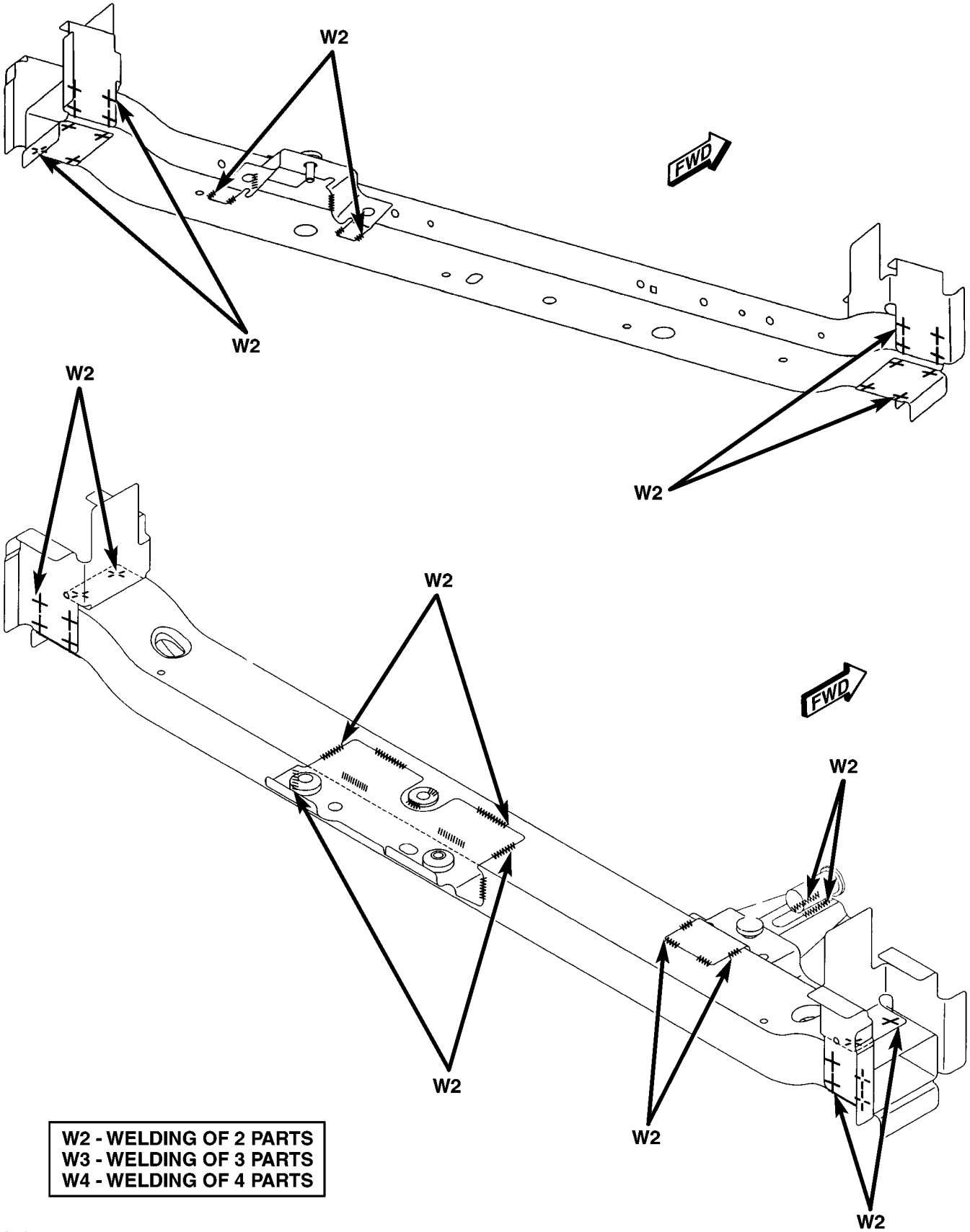

80fe0aa0

Fig. 107 ENGINE MOUNTING PLATE & TOW BRACKET

WELD LOCATIONS (Continued)

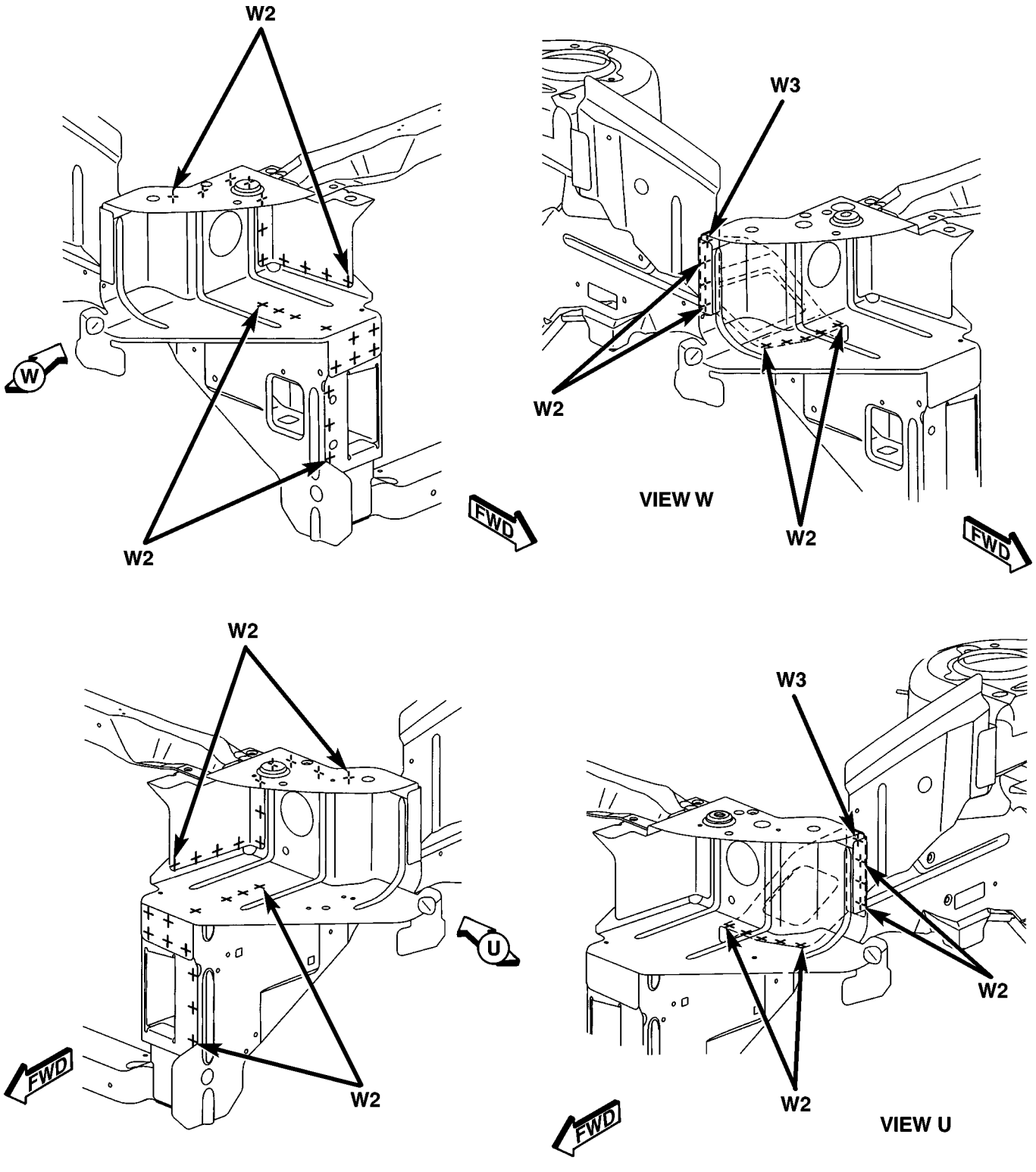

80c5fd76

Fig. 108 HEADLAMP MOUNTING PLATE

WELD LOCATIONS (Continued)

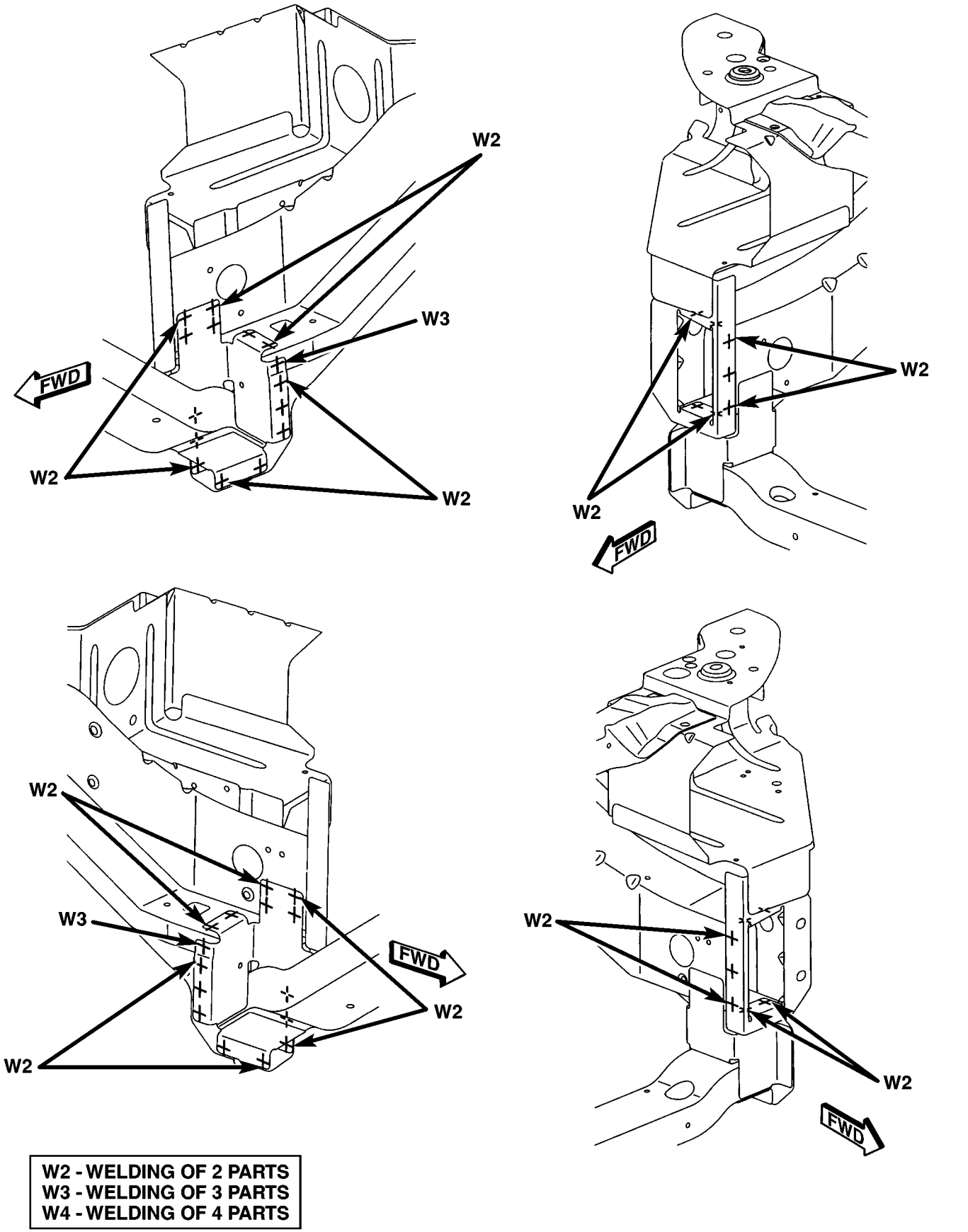

Fig. 109 LOWER RADIATOR CROSS MEMBER BRACKETS

WELD LOCATIONS (Continued)

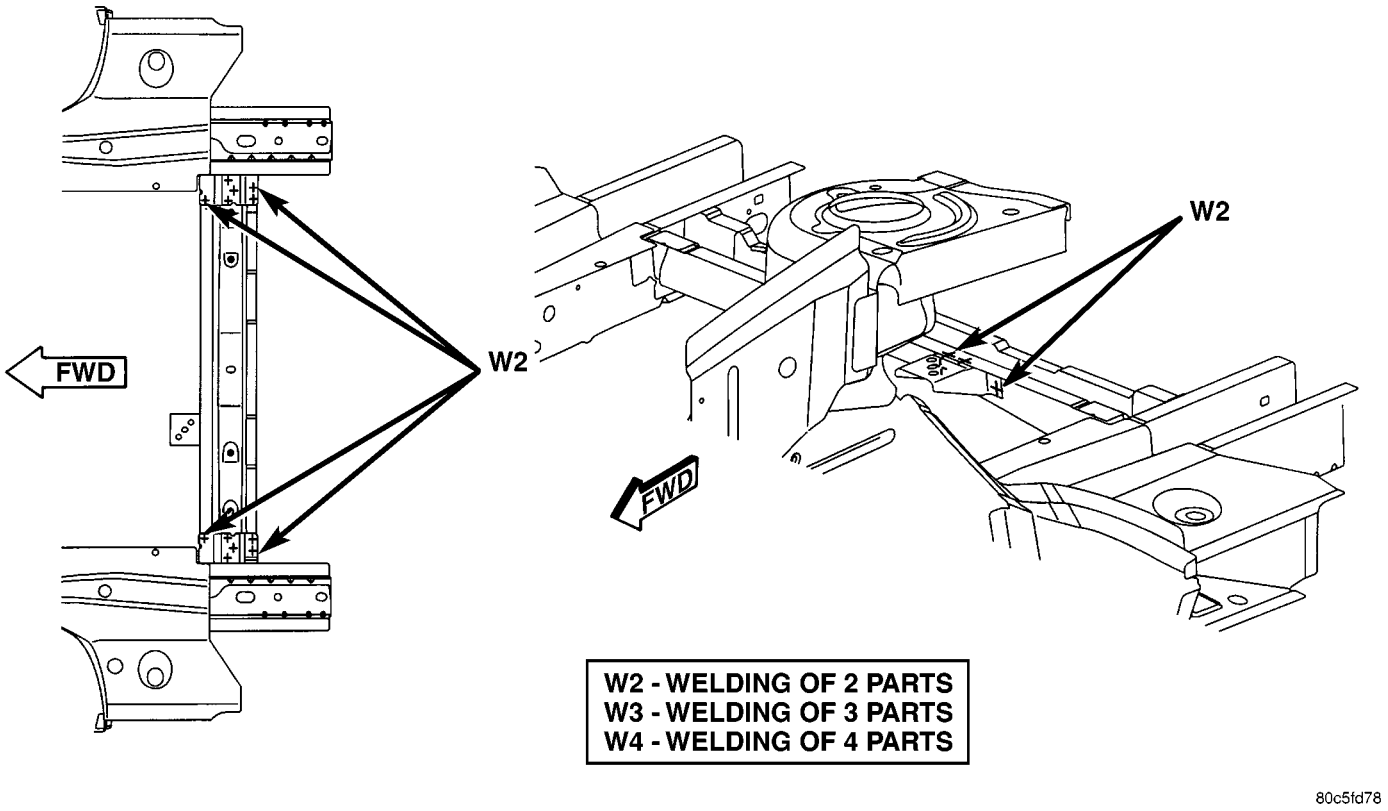

Fig. 110 CROSS MEMBER EXTENSIONS

WELD LOCATIONS (Continued)

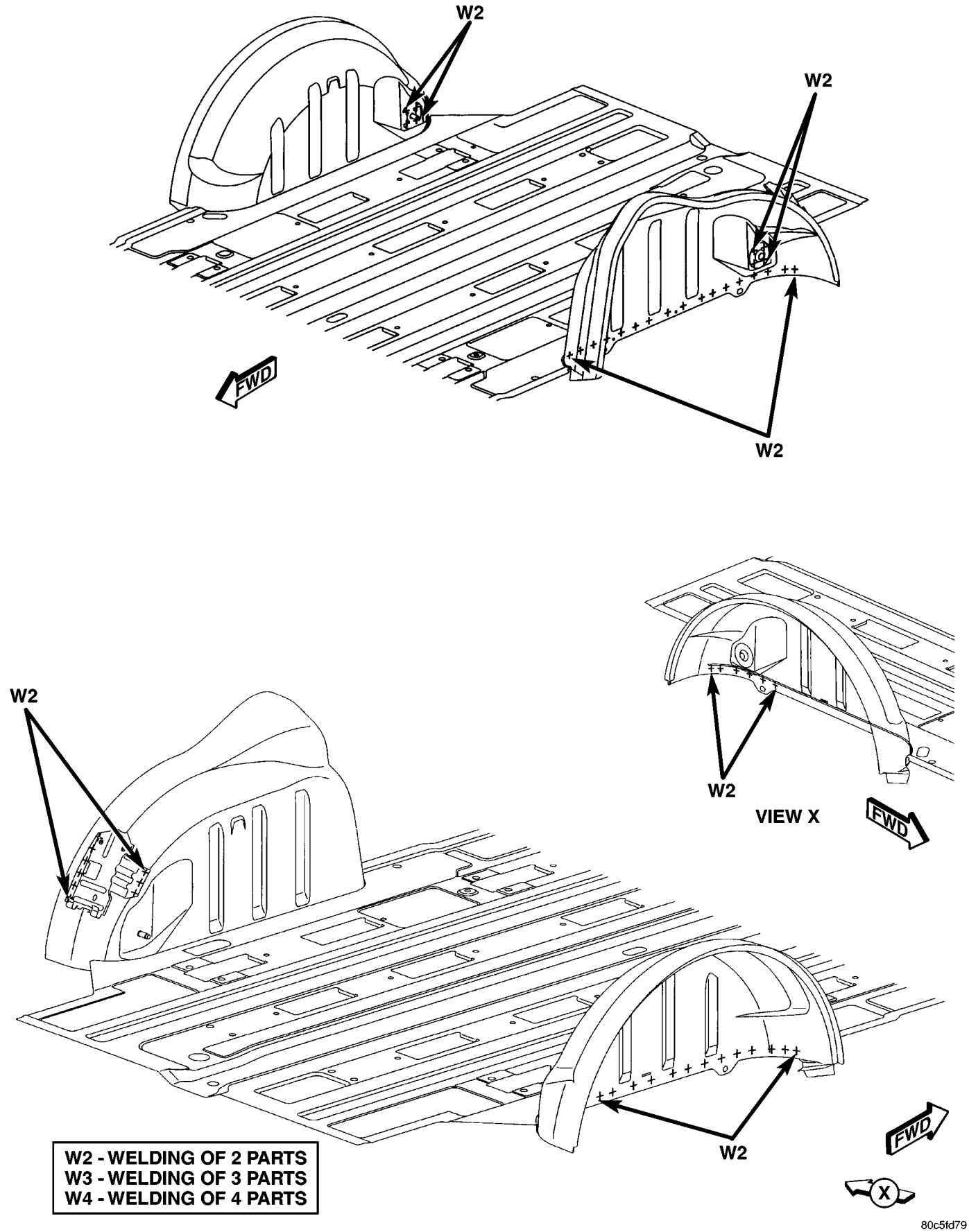

Fig. 111 JACK MOUNTING BRACKET - LONG WHEEL BASE SHOWN, SHORT SIMILAR

WELD LOCATIONS (Continued)

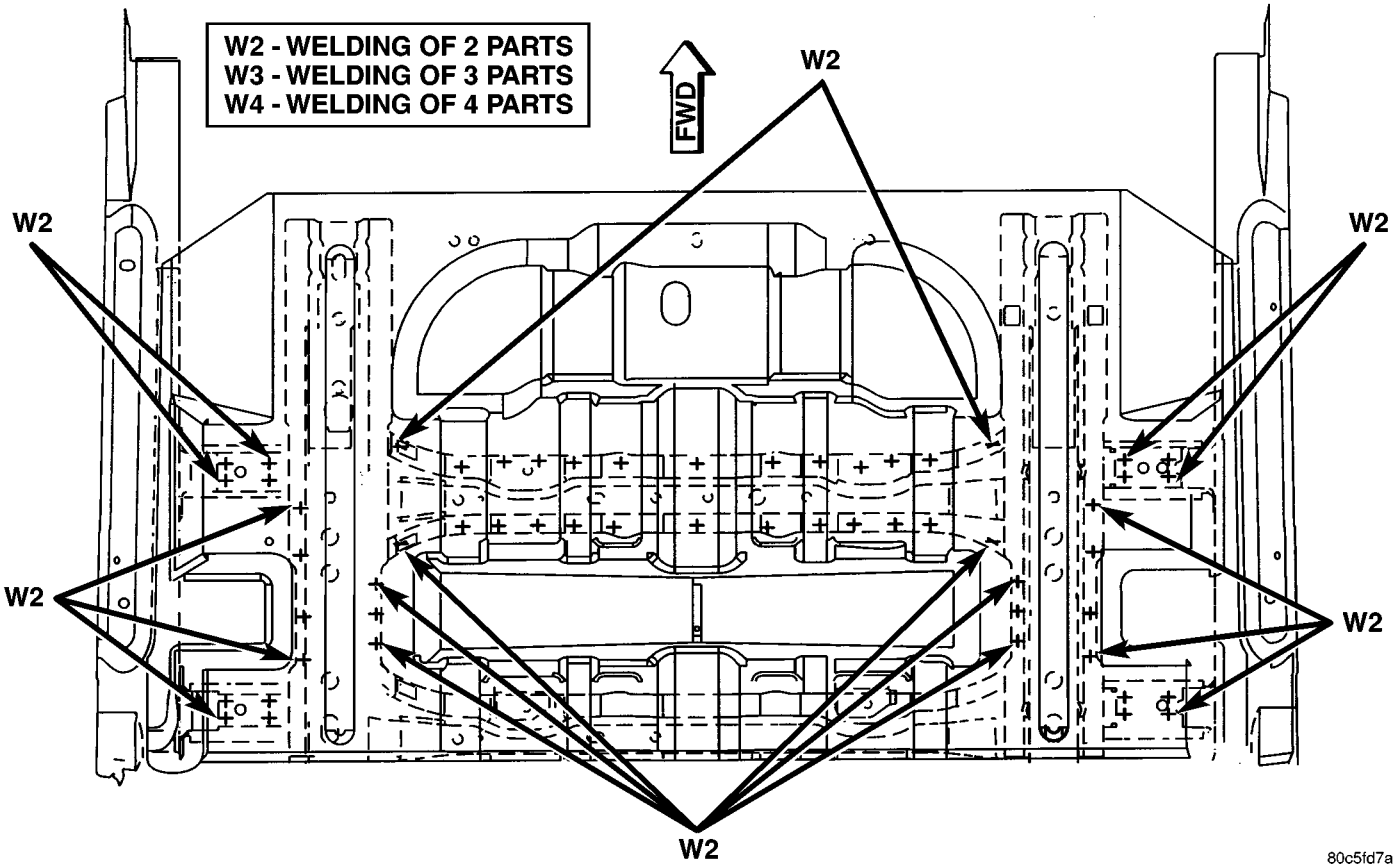

Fig. 112 FRONT SEAT CROSS MEMBER - LONG WHEELBASE ONLY

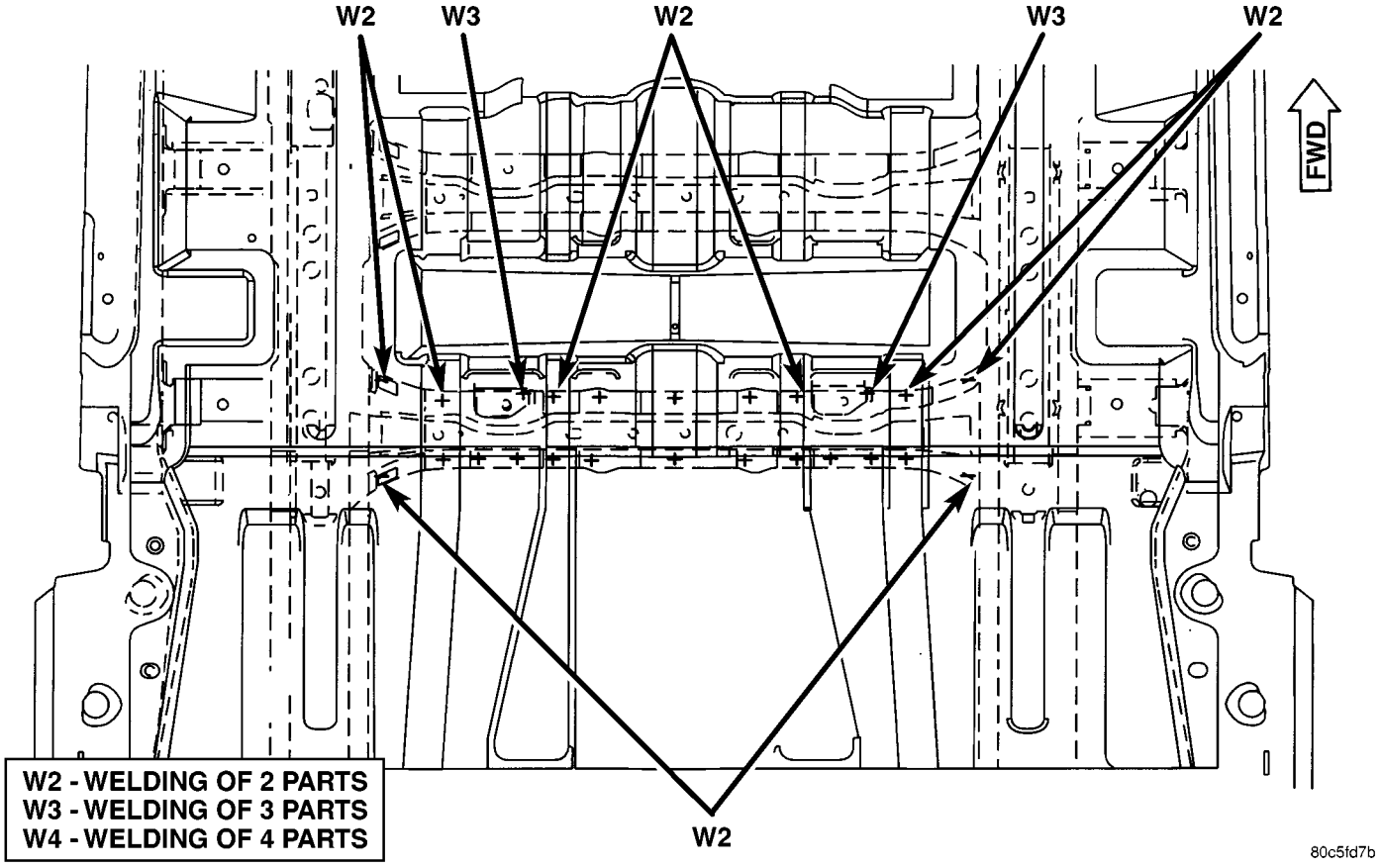

Fig. 113 FRONT SEAT CROSS MEMBER - ALL WHEEL DRIVE ONLY

WELD LOCATIONS (Continued)

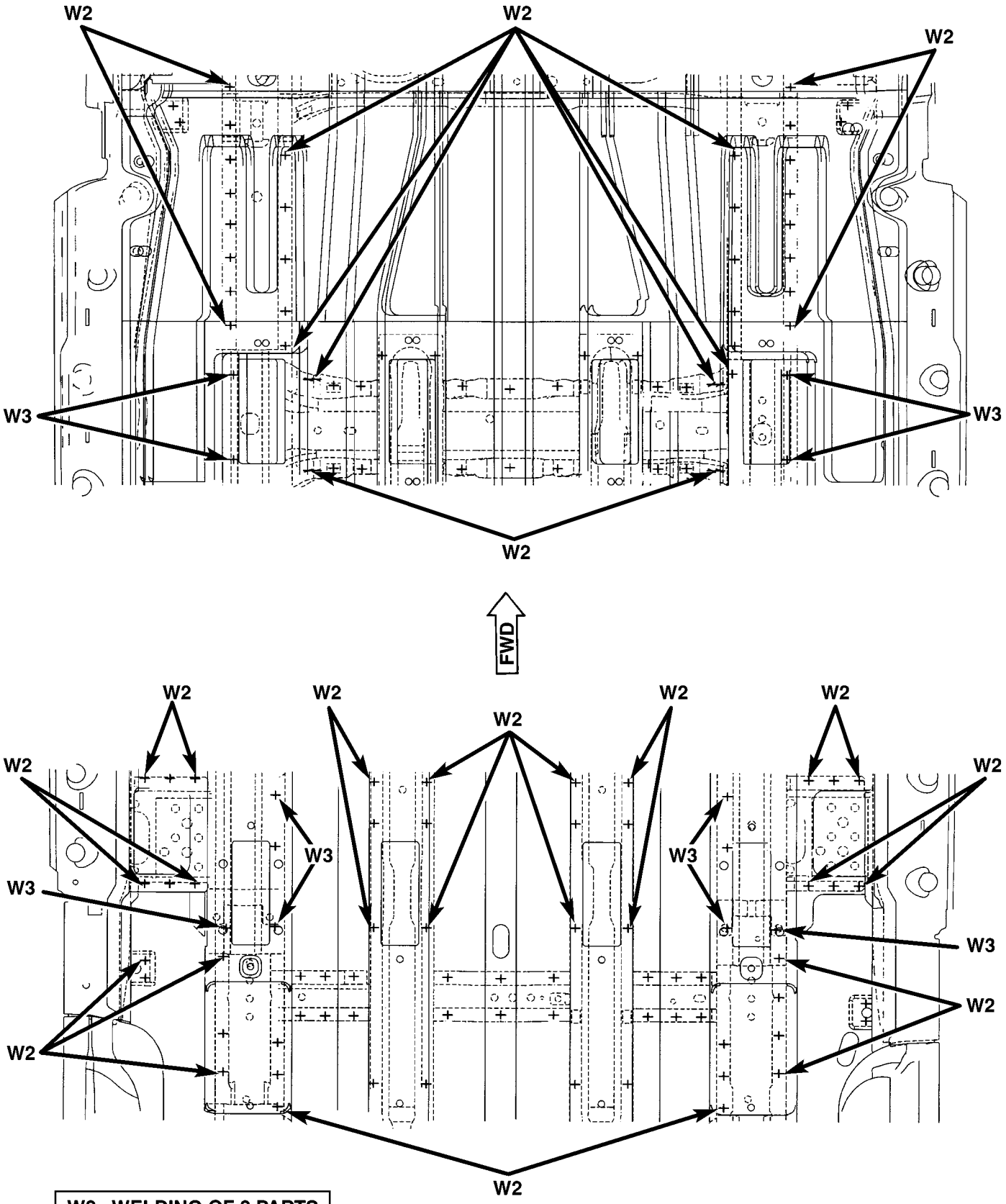

80c5fd7c

Fig. 114 FUEL TANK SUPPORT CROSS MEMBERS - LONG WHEEL BASE ONLY

WELD LOCATIONS (Continued)

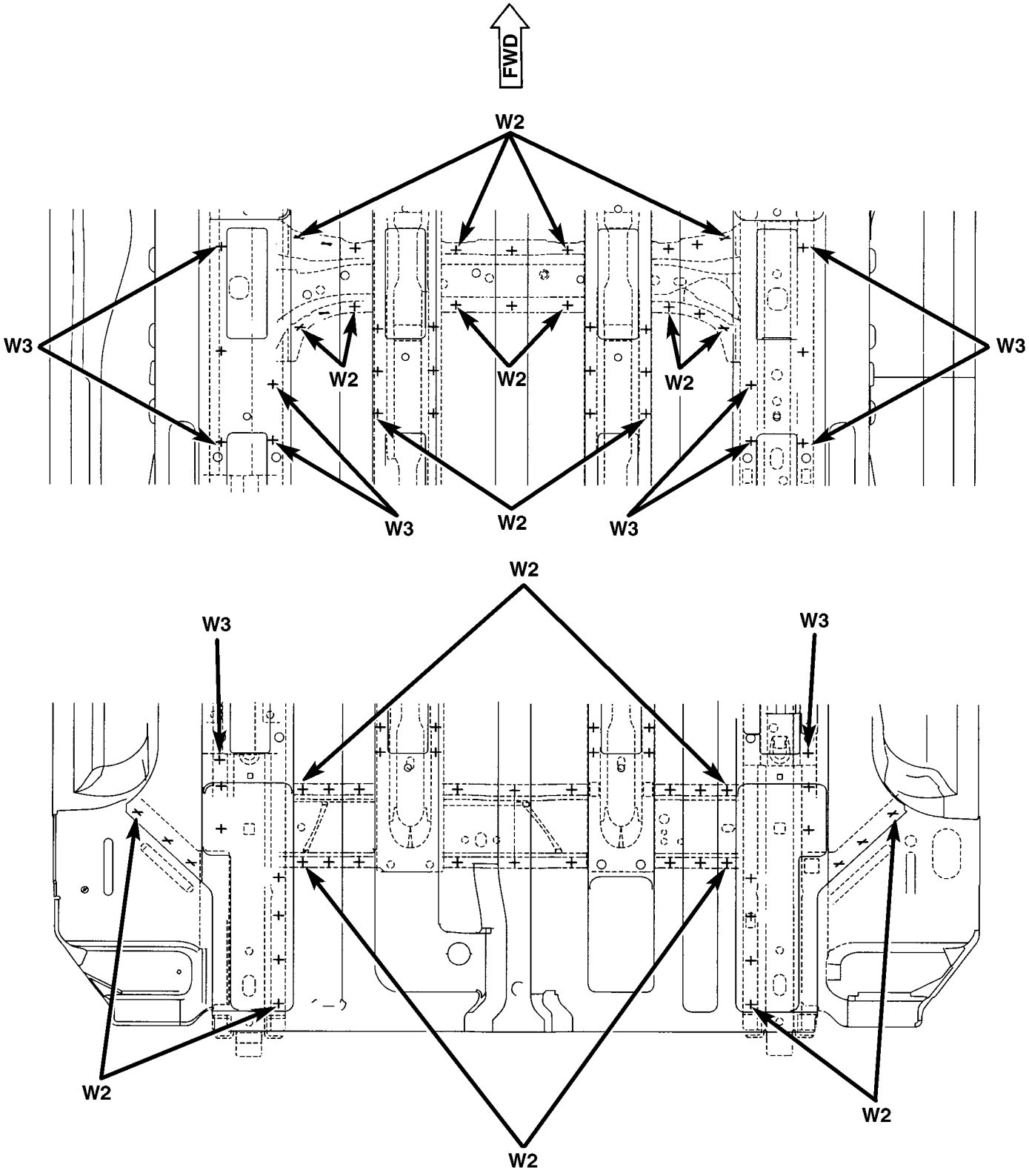

W2 - WELDING OF 2 PARTS
W3 - WELDING OF 3 PARTS
W4 - WELDING OF 4 PARTS

80fe0b53

Fig. 115 REAR SUPPORT AND TIRE STOWAGE CROSSMEMBERS - LONG WHEEL BASE ONLY

WELD LOCATIONS (Continued)

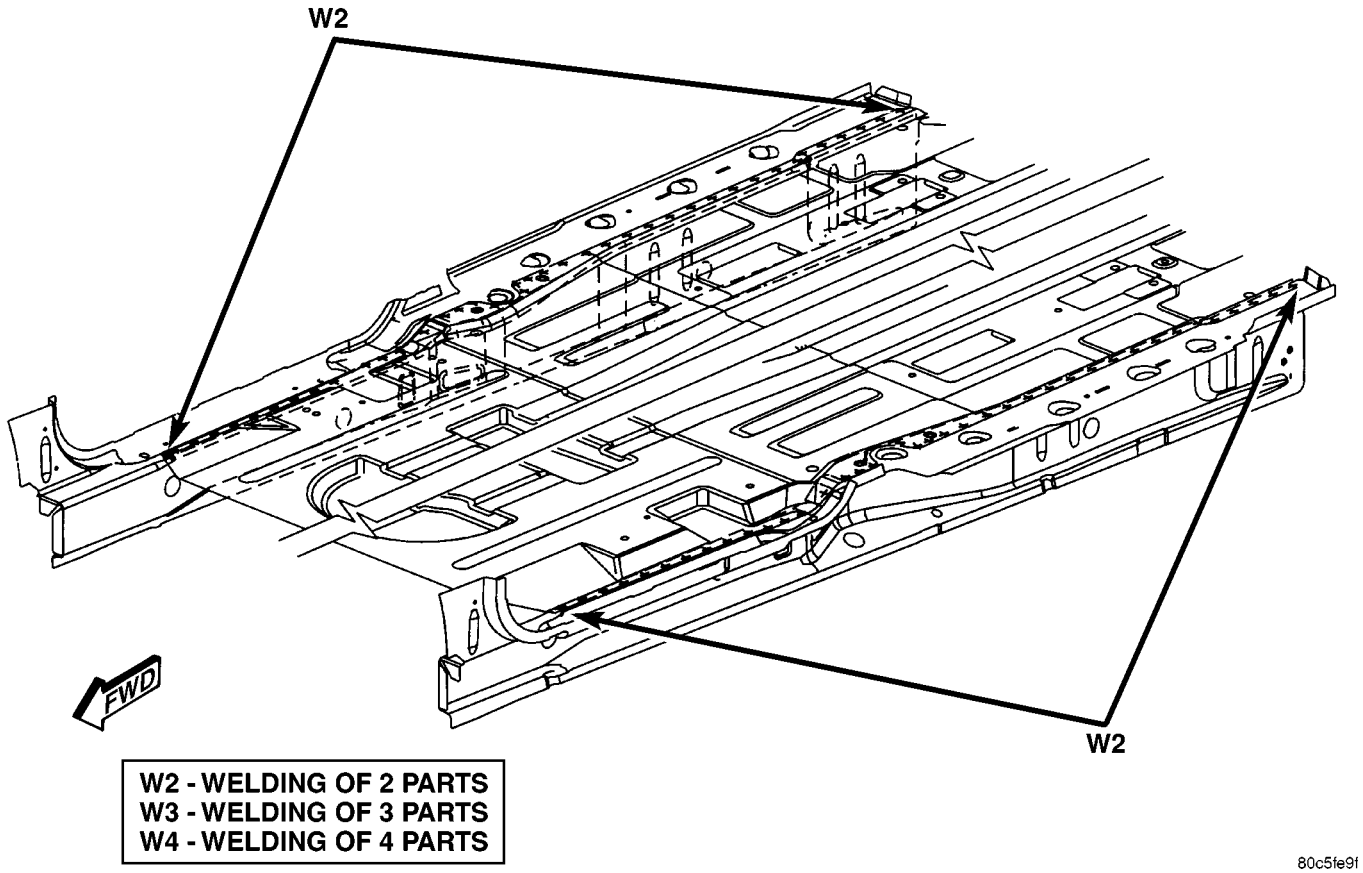

Fig. 116 INNER SIDE SILLS - LONG WHEEL BASE ONLY

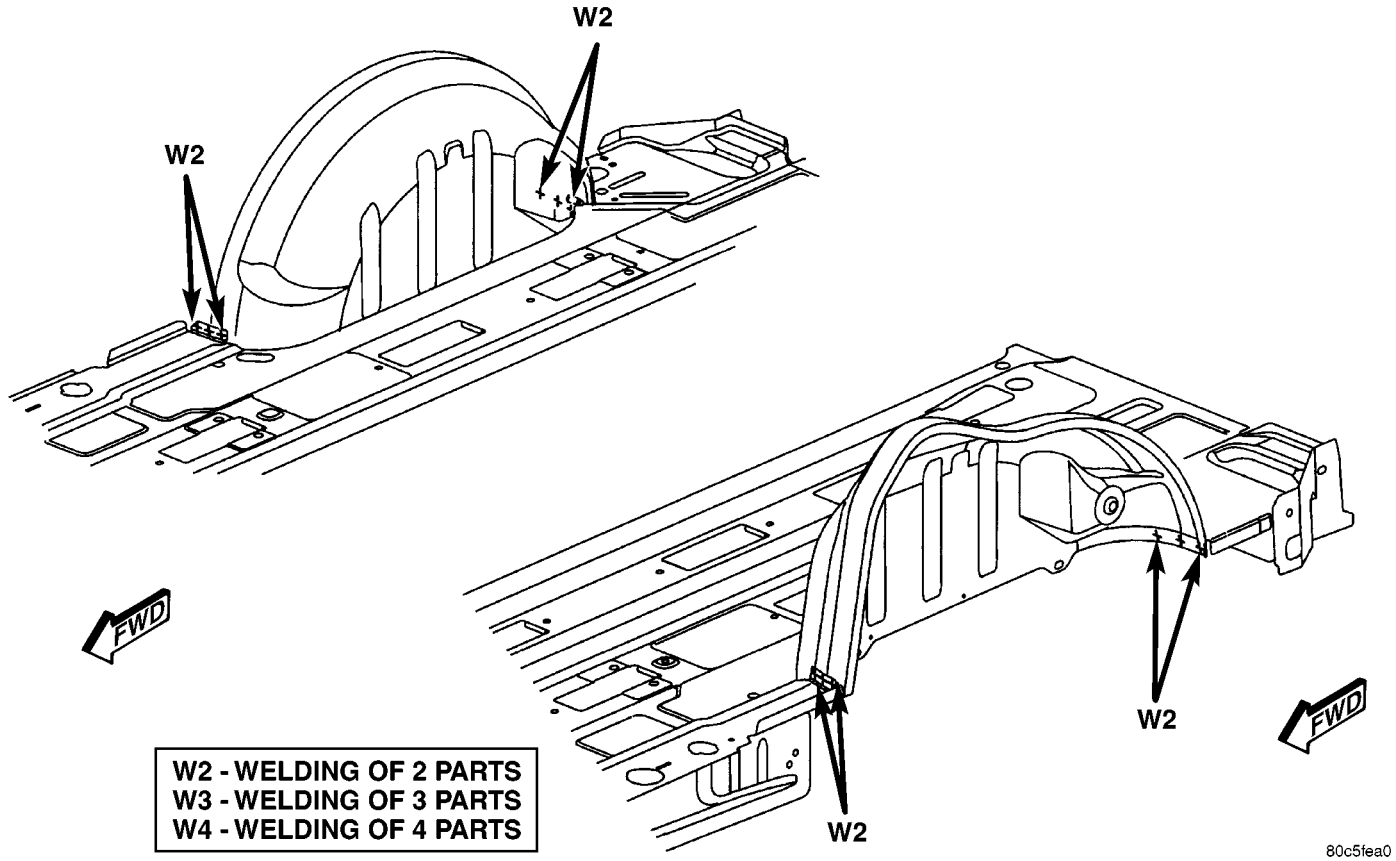

Fig. 117 WHEELHOUSES, SIDE SILLS, SUSPENSION BRACKETS - LONG WHEEL BASE ONLY

WELD LOCATIONS (Continued)

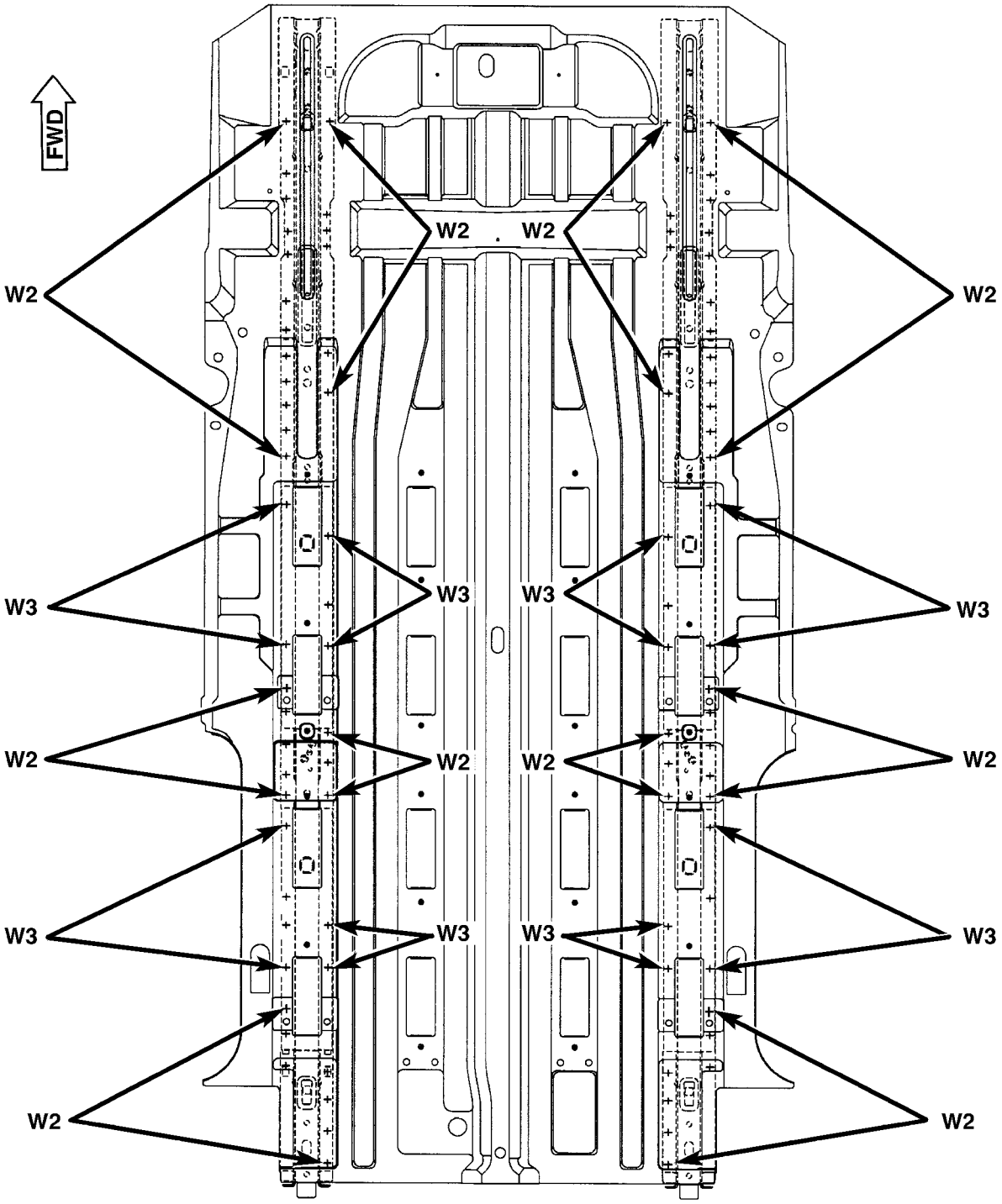

W2 - WELDING OF 2 PARTS
W3 - WELDING OF 3 PARTS
W4 - WELDING OF 4 PARTS

80a80aa3

Fig. 118 REAR SEAT REINFORCEMENTS - SHORT WHEEL BASE ONLY

WELD LOCATIONS (Continued)

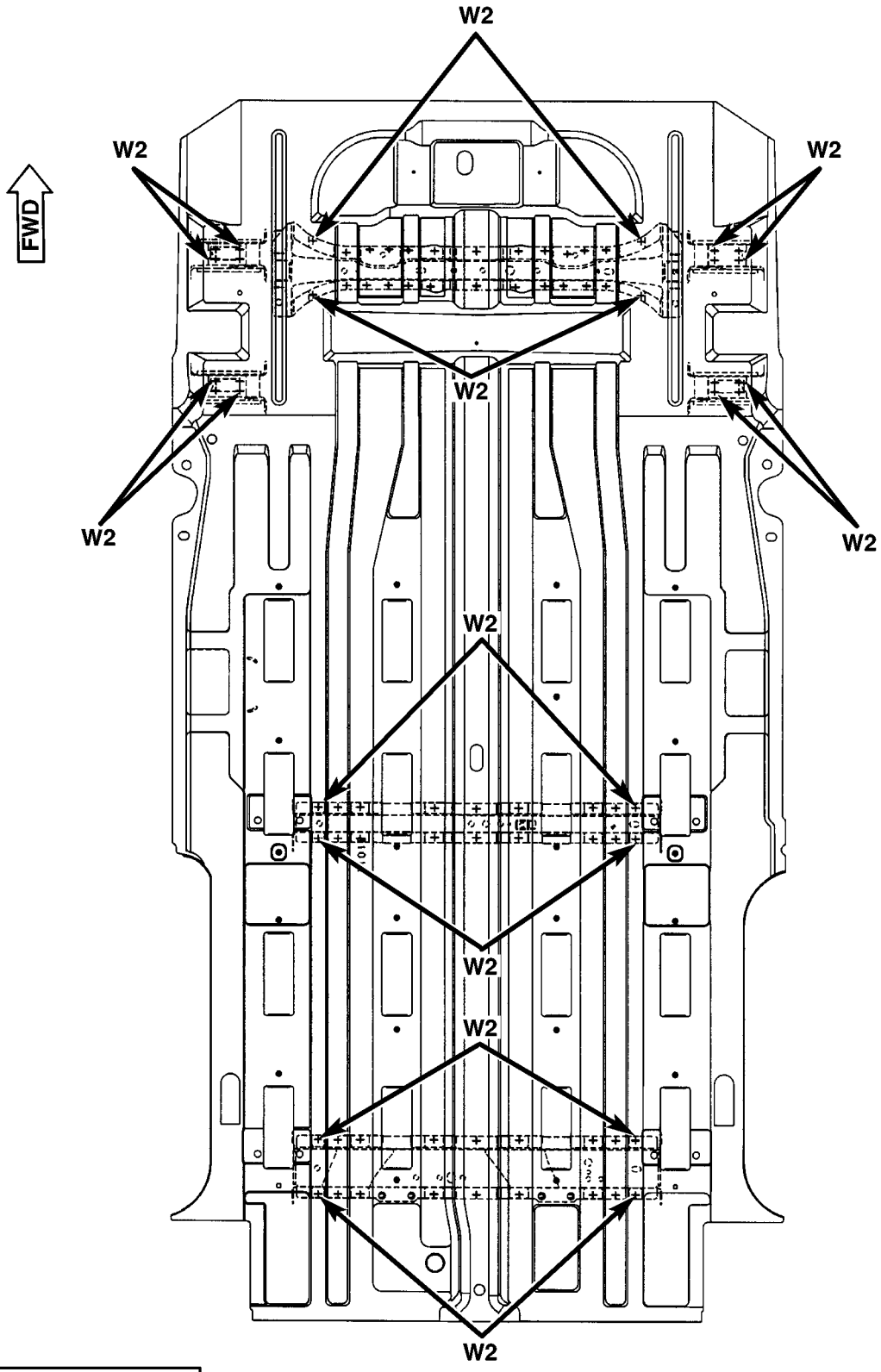

80c5fea2

Fig. 119 FUEL TANK SUPPORT AND TIRE STOWAGE - SHORT WHEEL BASE ONLY

WELD LOCATIONS (Continued)

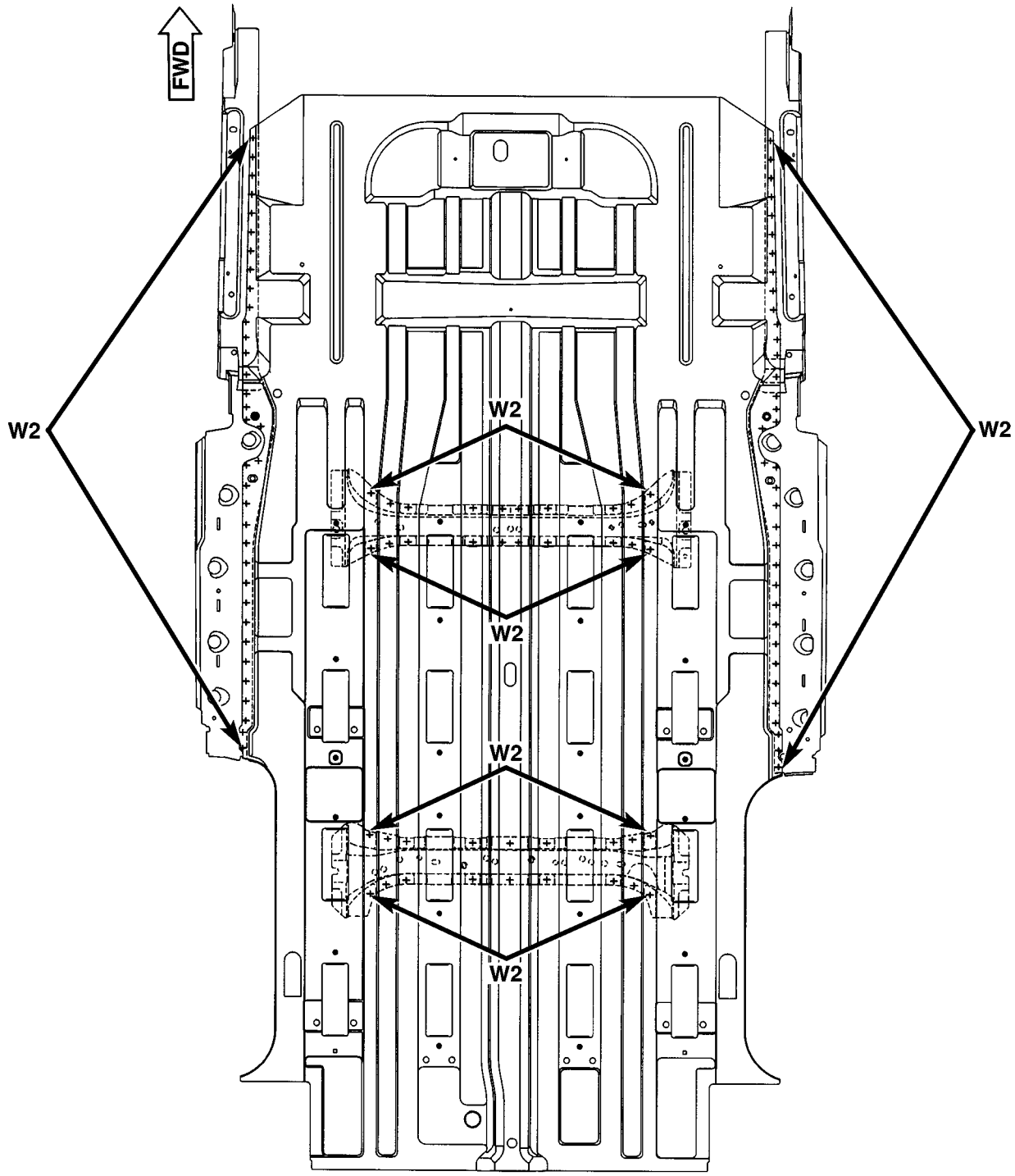

W2 - WELDING OF 2 PARTS
W3 - WELDING OF 3 PARTS
W4 - WELDING OF 4 PARTS

80c5fea3

Fig. 120 INNER SIDE SILLS - SHORT WHEEL BASE ONLY

WELD LOCATIONS (Continued)

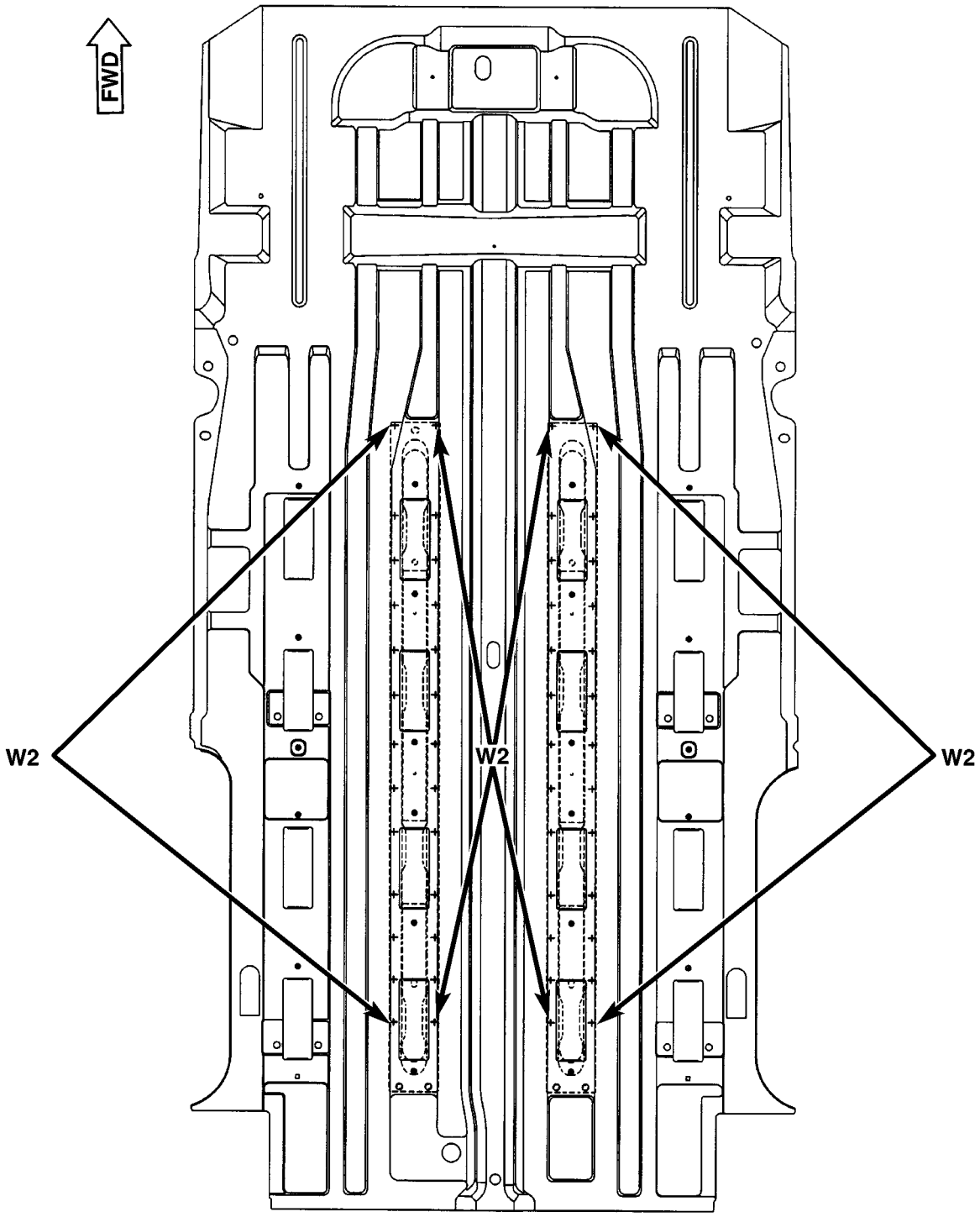

W2 - WELDING OF 2 PARTS
W3 - WELDING OF 3 PARTS
W4 - WELDING OF 4 PARTS

80c5fea4

Fig. 121 REAR SEAT REINFORCEMENTS - SHORT WHEEL BASE ONLY

WELD LOCATIONS (Continued)

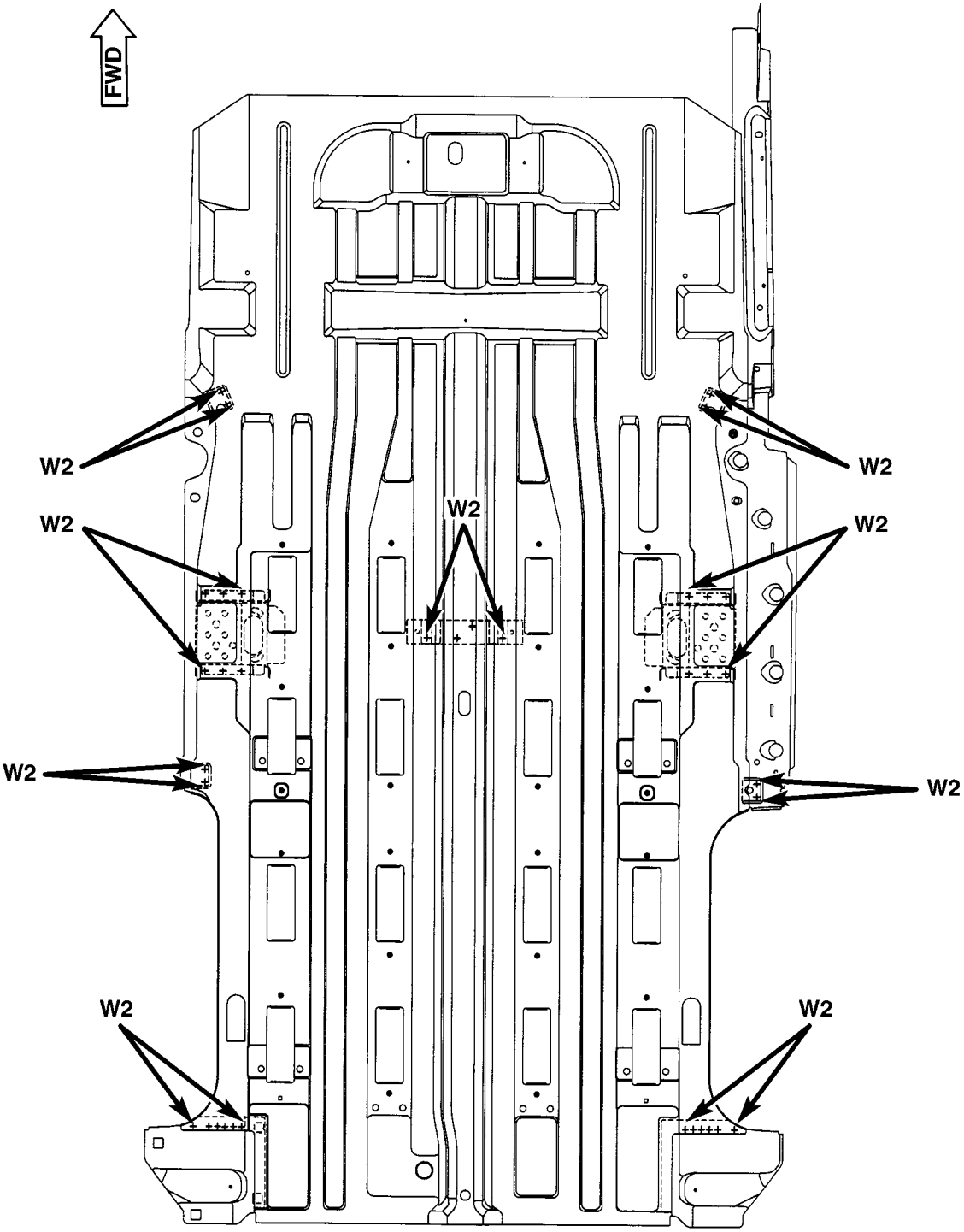

80fe0b70

Fig. 122 CENTER CONSOLE REINFORCEMENT - SHORT WHEEL BASE ONLY

WELD LOCATIONS (Continued)

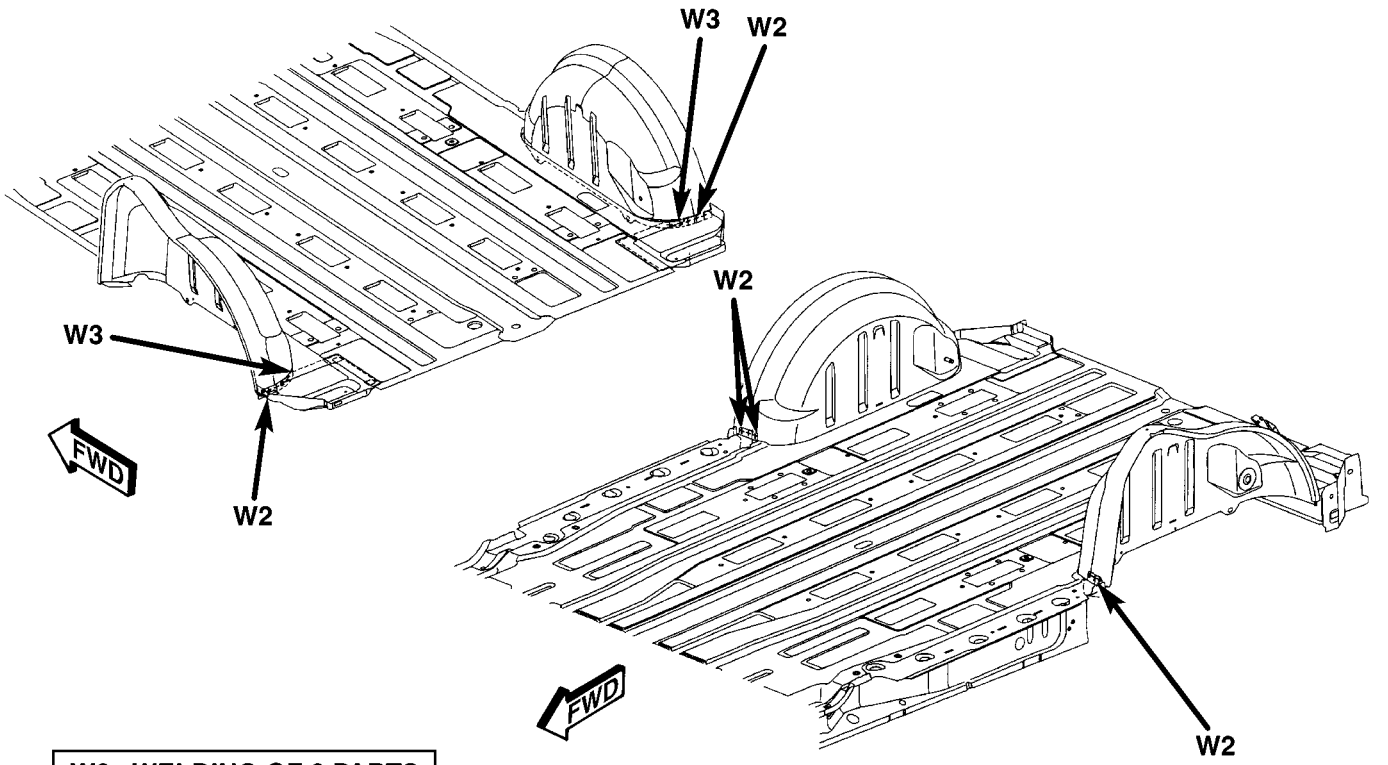

Fig. 123 WHEELHOUSES - SHORT WHEEL BASE ONLY

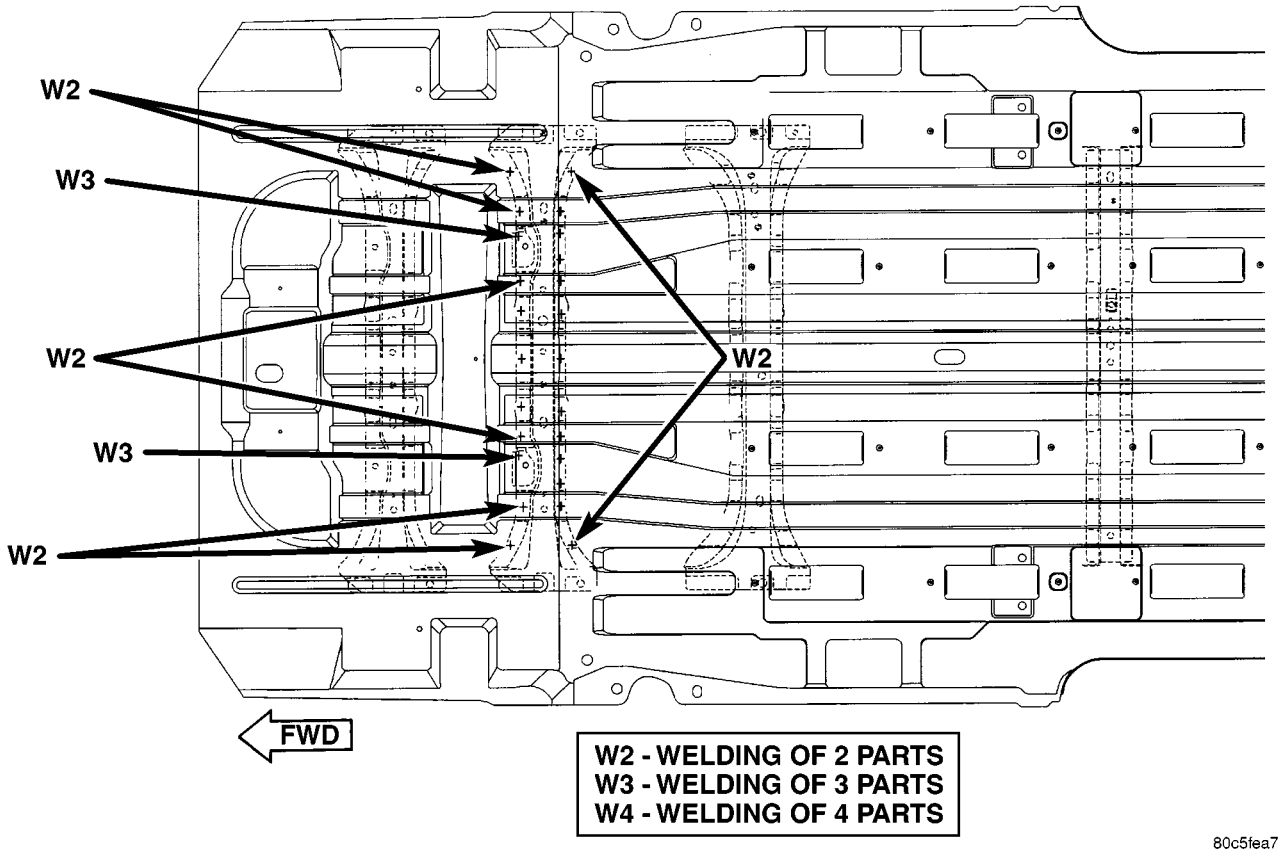

Fig. 124 FRONT SEAT CROSS MEMBER - SHORT WHEELBASE, ALL WHEEL DRIVE ONLY

WELD LOCATIONS (Continued)

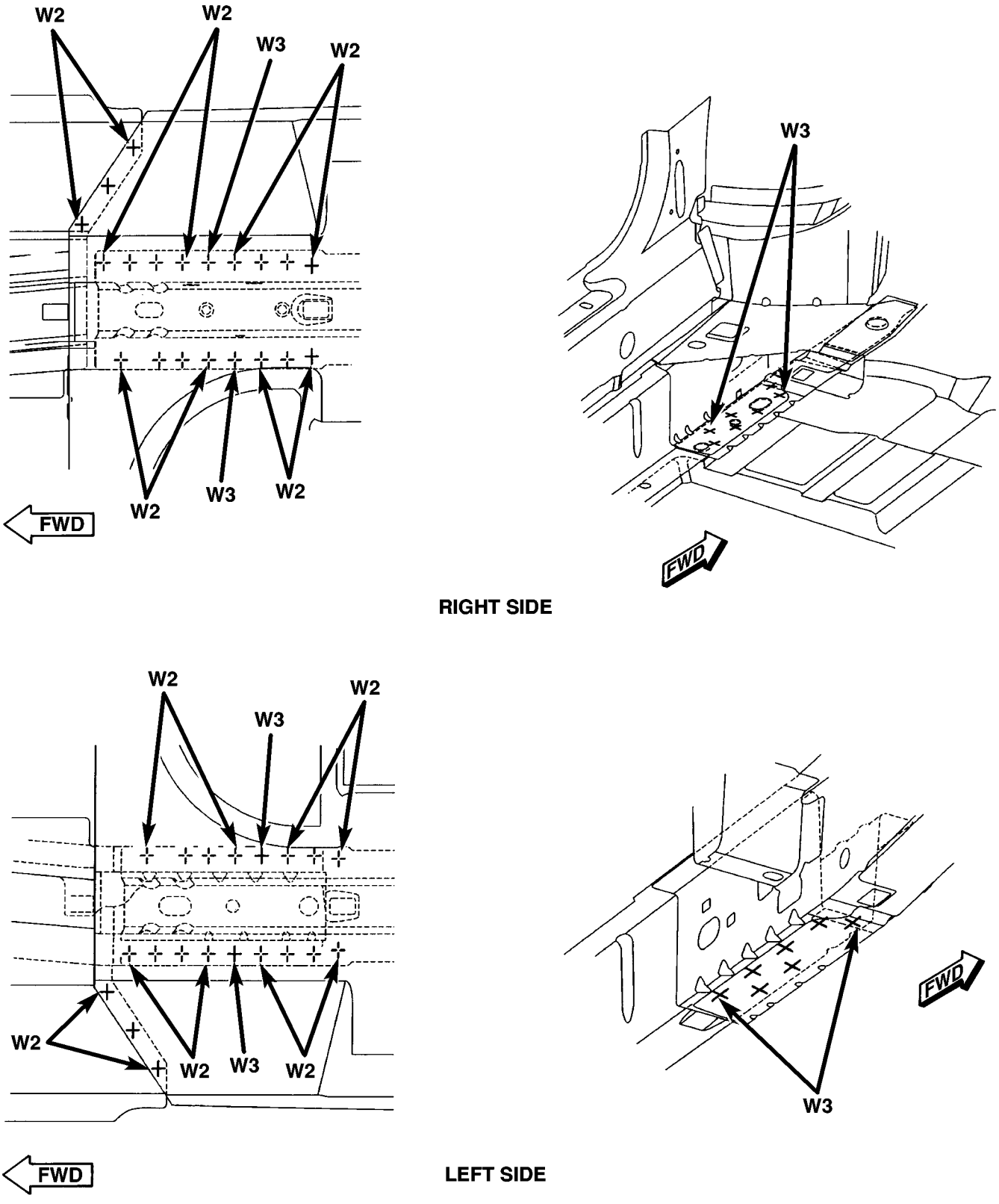

Fig. 125 FLOOR PAN SIDE RAIL - LONG WHEEL BASE ONLY

WELD LOCATIONS (Continued)

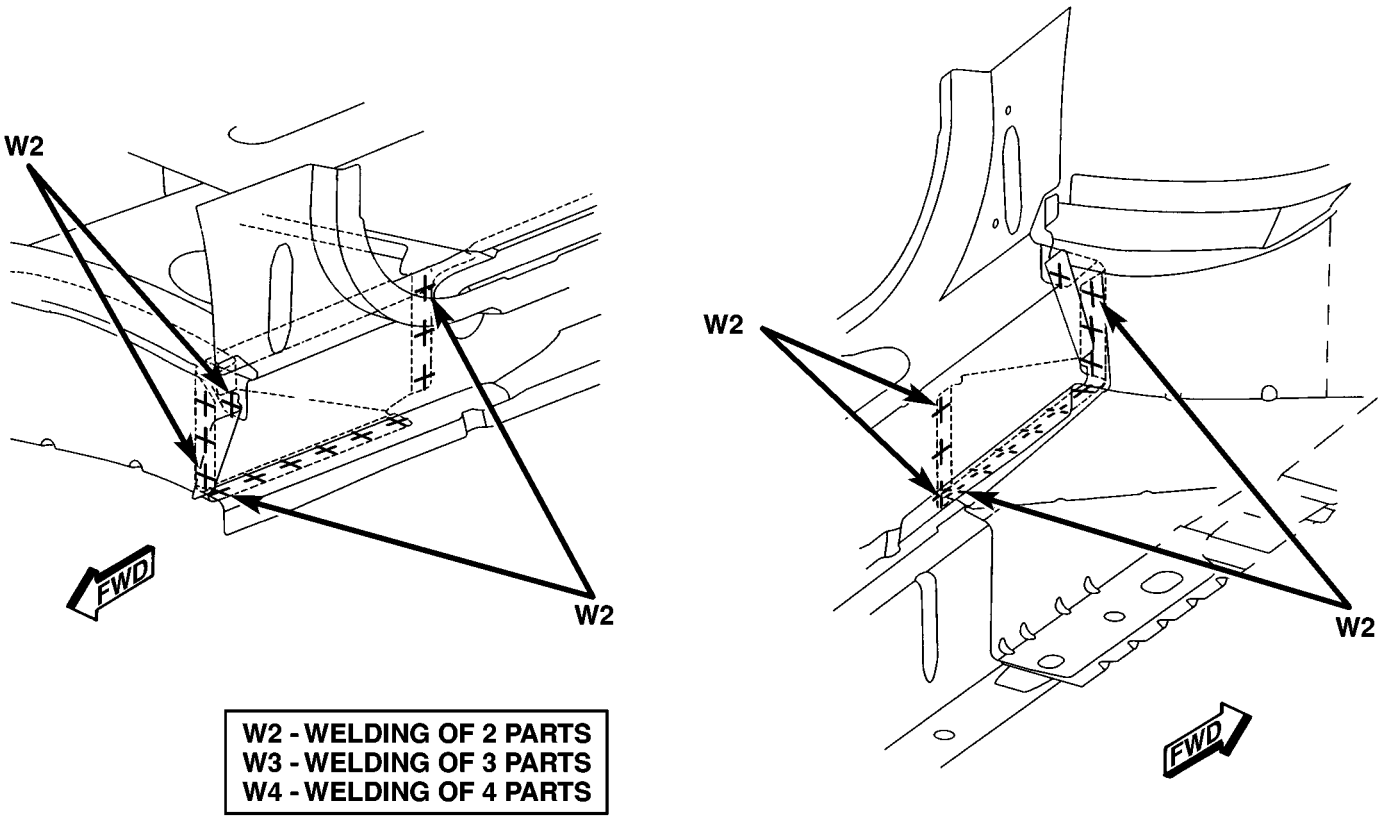

Fig. 126 INNER BODY SIDE SILL REINFORCEMENTS

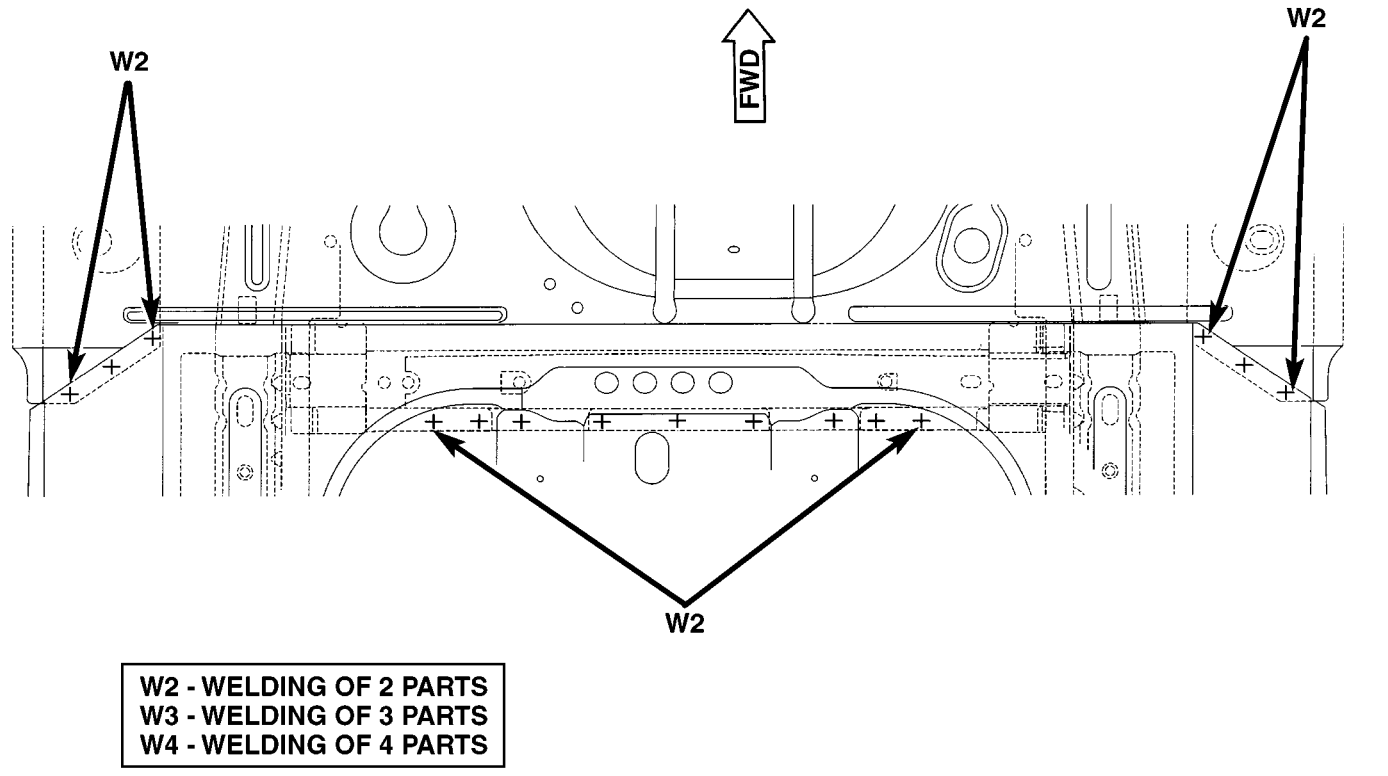

Fig. 127 TOE BOARD CROSSMEMBER

WELD LOCATIONS (Continued)

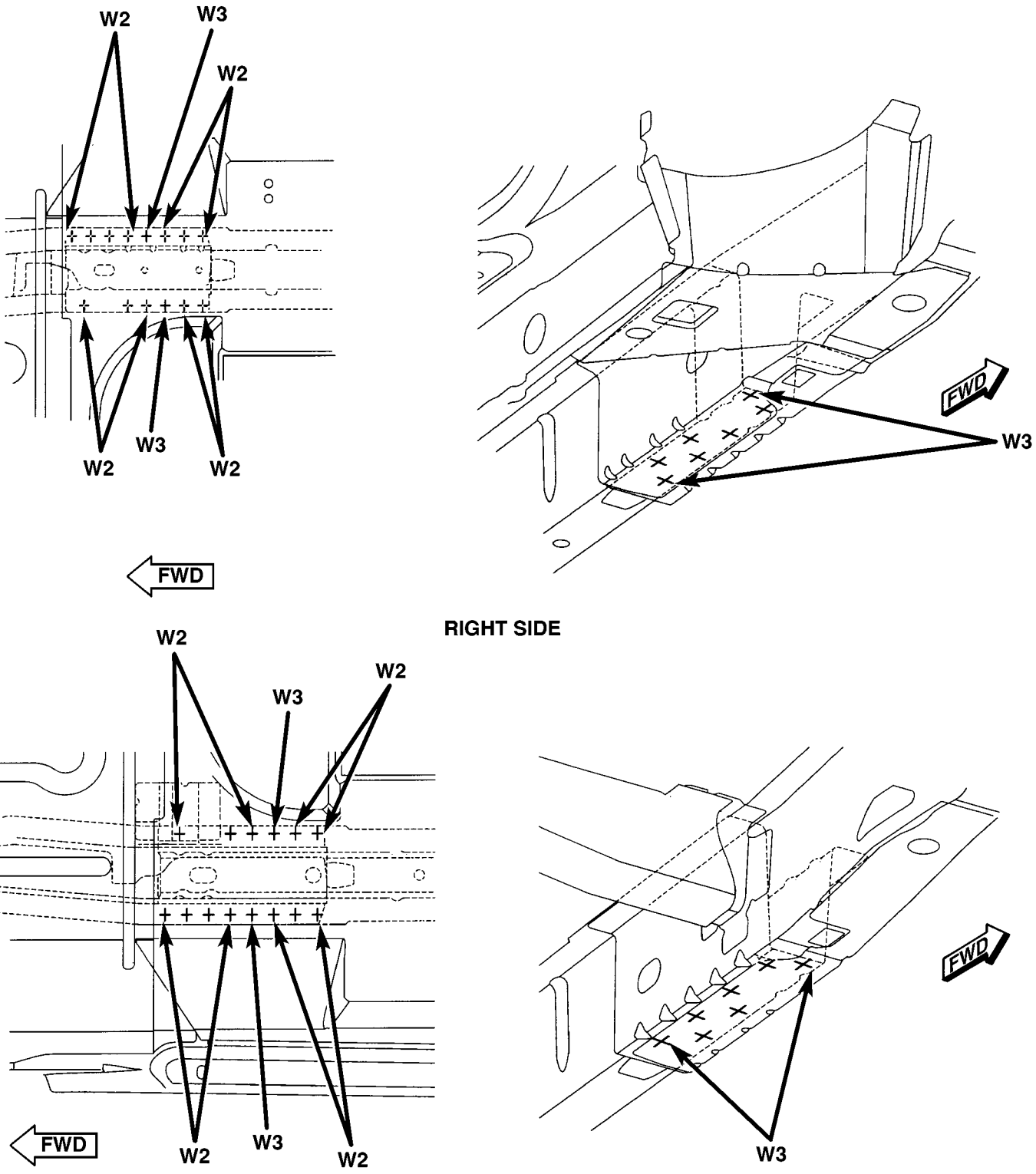

Fig. 128 FRONT SIDE RAIL - SHORT WHEEL BASE ONLY

WELD LOCATIONS (Continued)

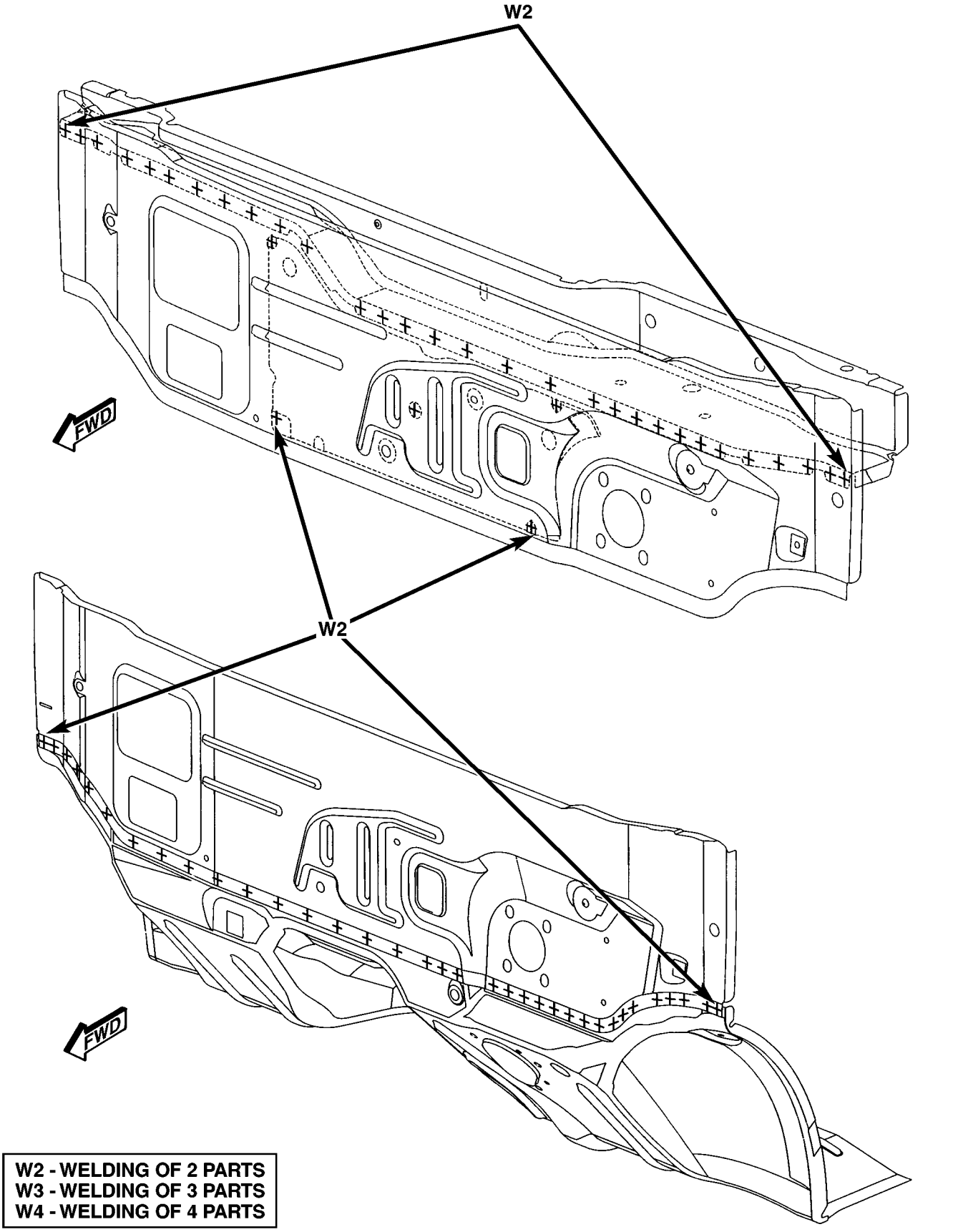

Fig. 129 DASH PANEL REINFORCEMENT

WELD LOCATIONS (Continued)

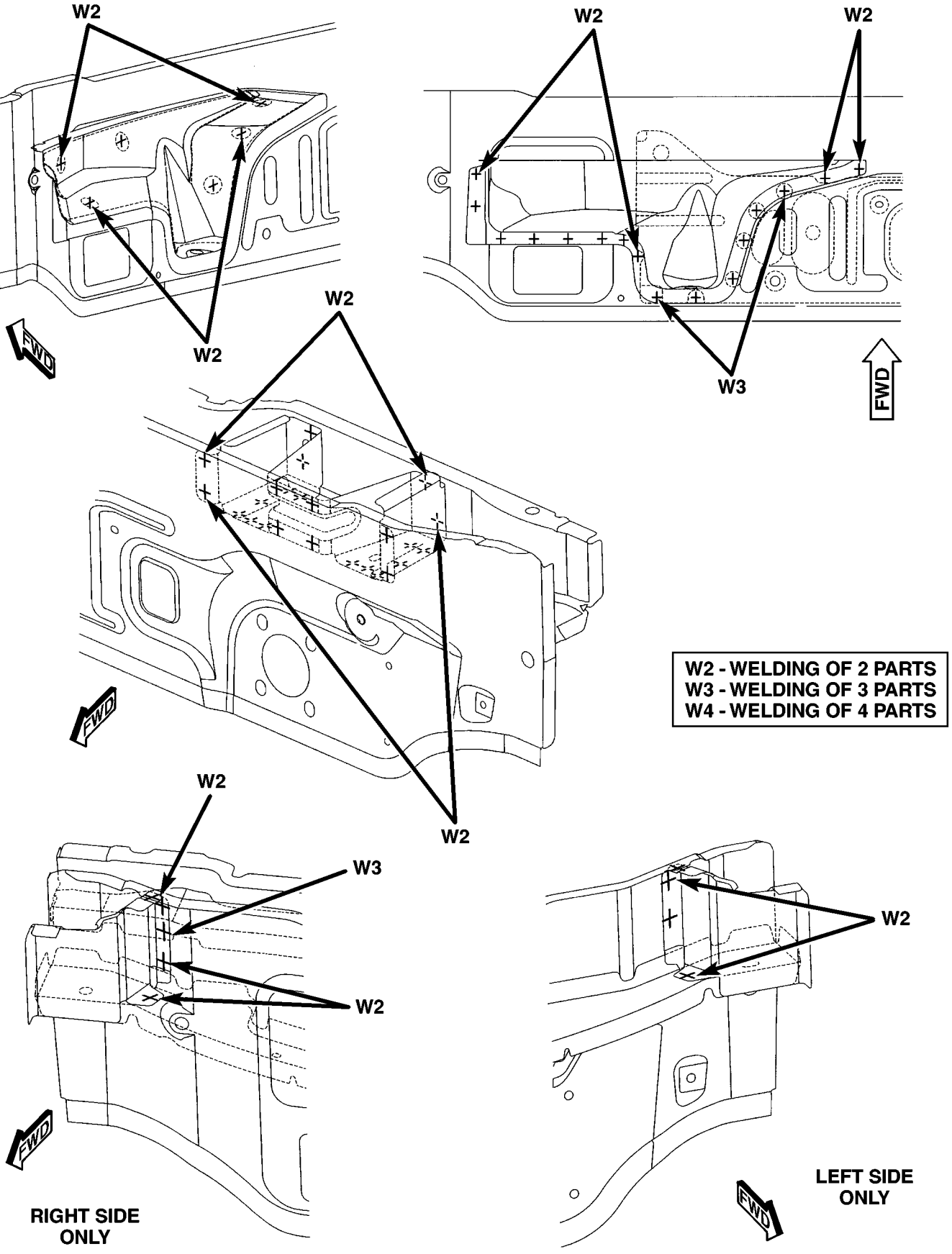

Fig. 130 LOWER COWL PLENUM

WELD LOCATIONS (Continued)

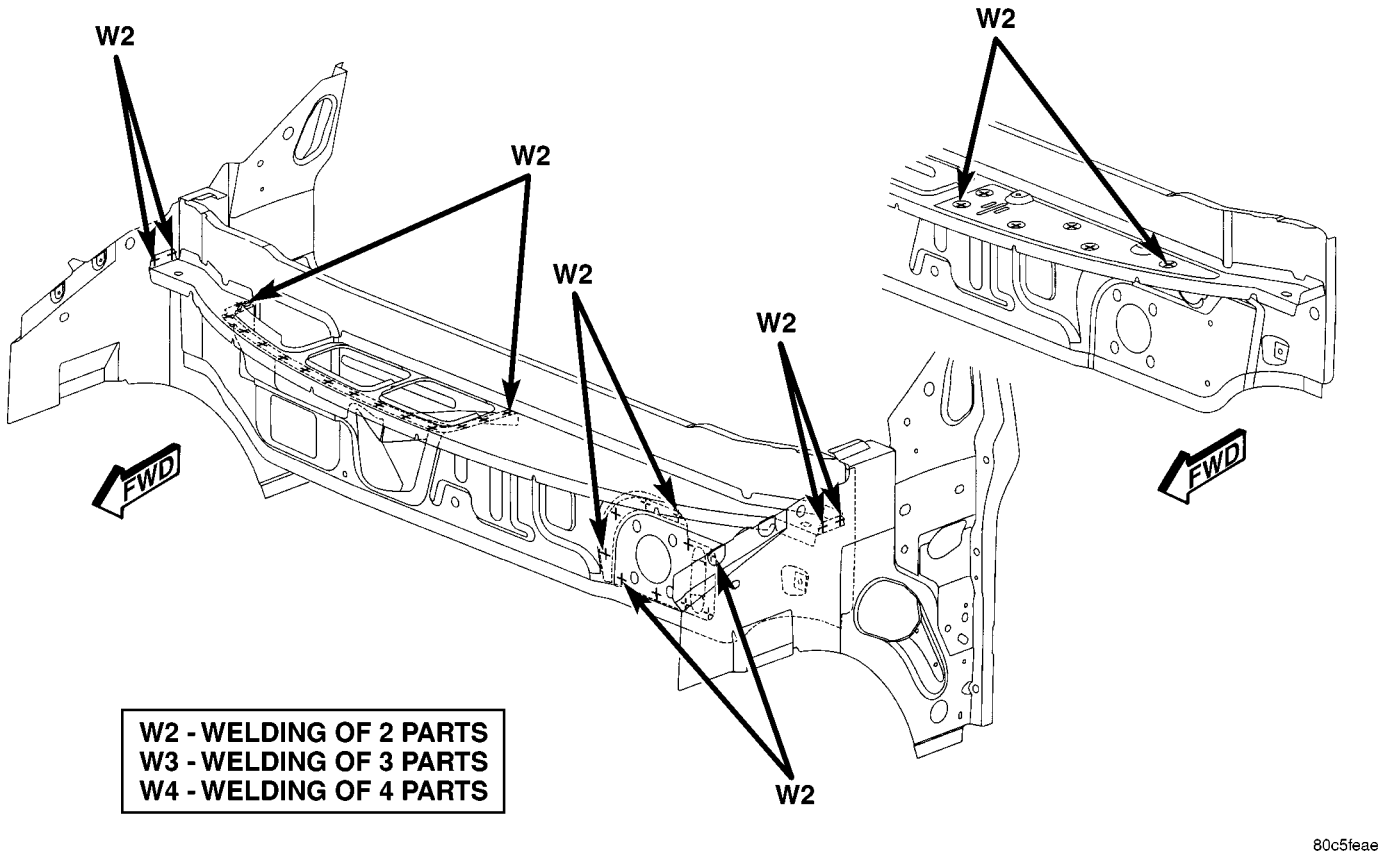

Fig. 131 UPPER COWL PLENUM SUPPORT

WELD LOCATIONS (Continued)

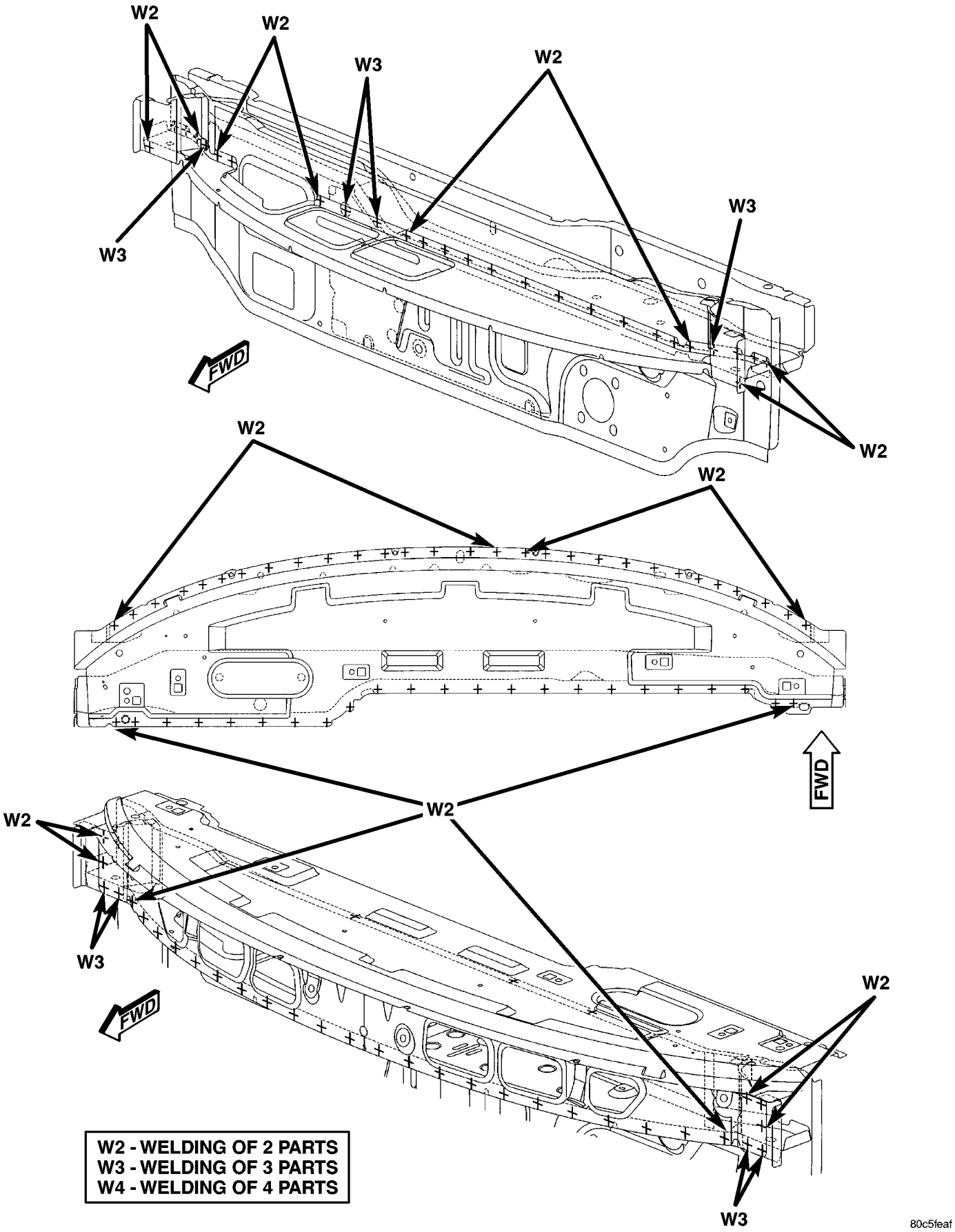

Fig. 132 UPPER DASH PANEL

WELD LOCATIONS (Continued)

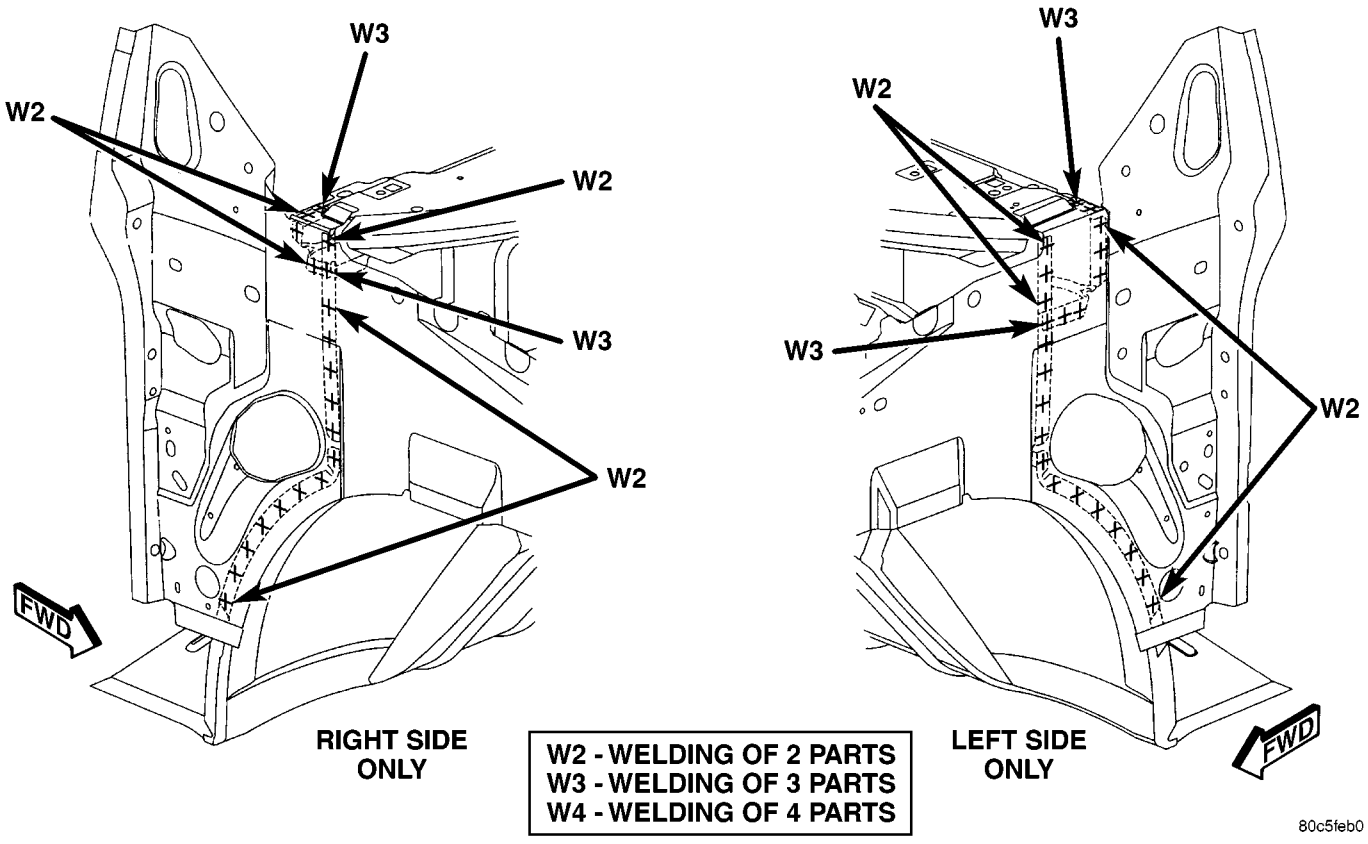

Fig. 133 COWL SIDE PANELS

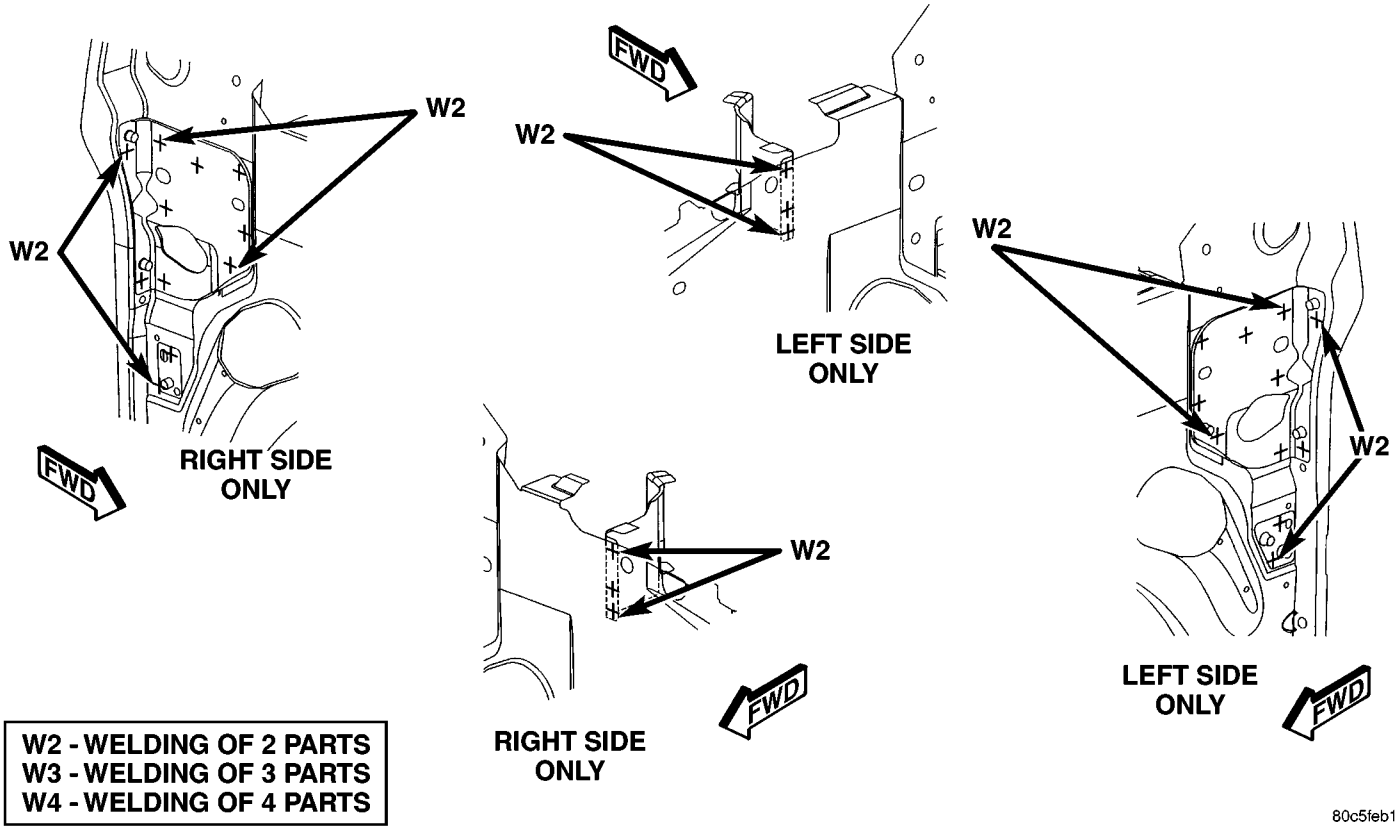

Fig. 134 INSTRUMENT PANEL ATTACHMENT TAPPING PLATES

WELD LOCATIONS (Continued)

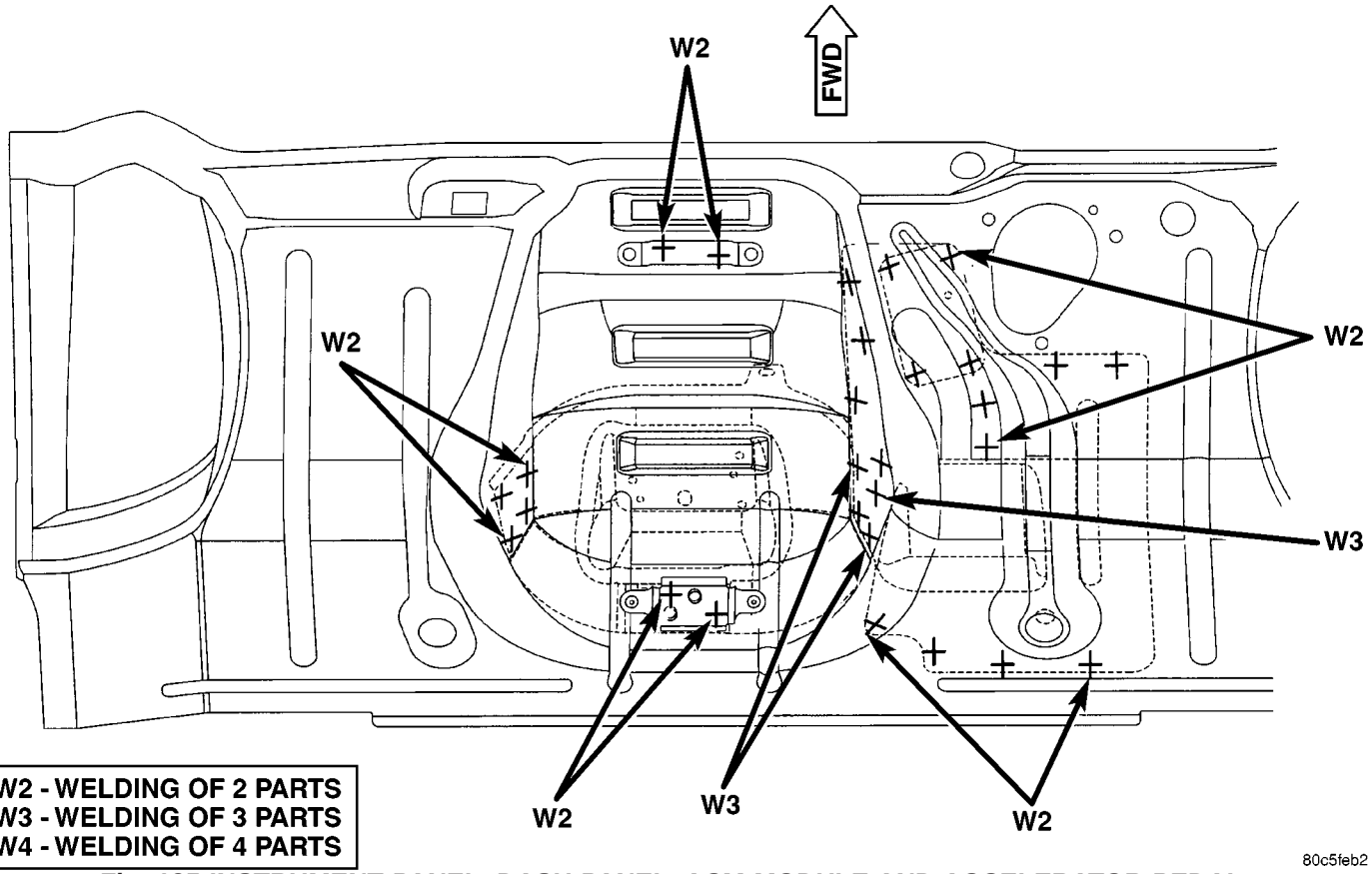

Fig. 135 INSTRUMENT PANEL, DASH PANEL, ACM MODULE AND ACCELERATOR PEDAL

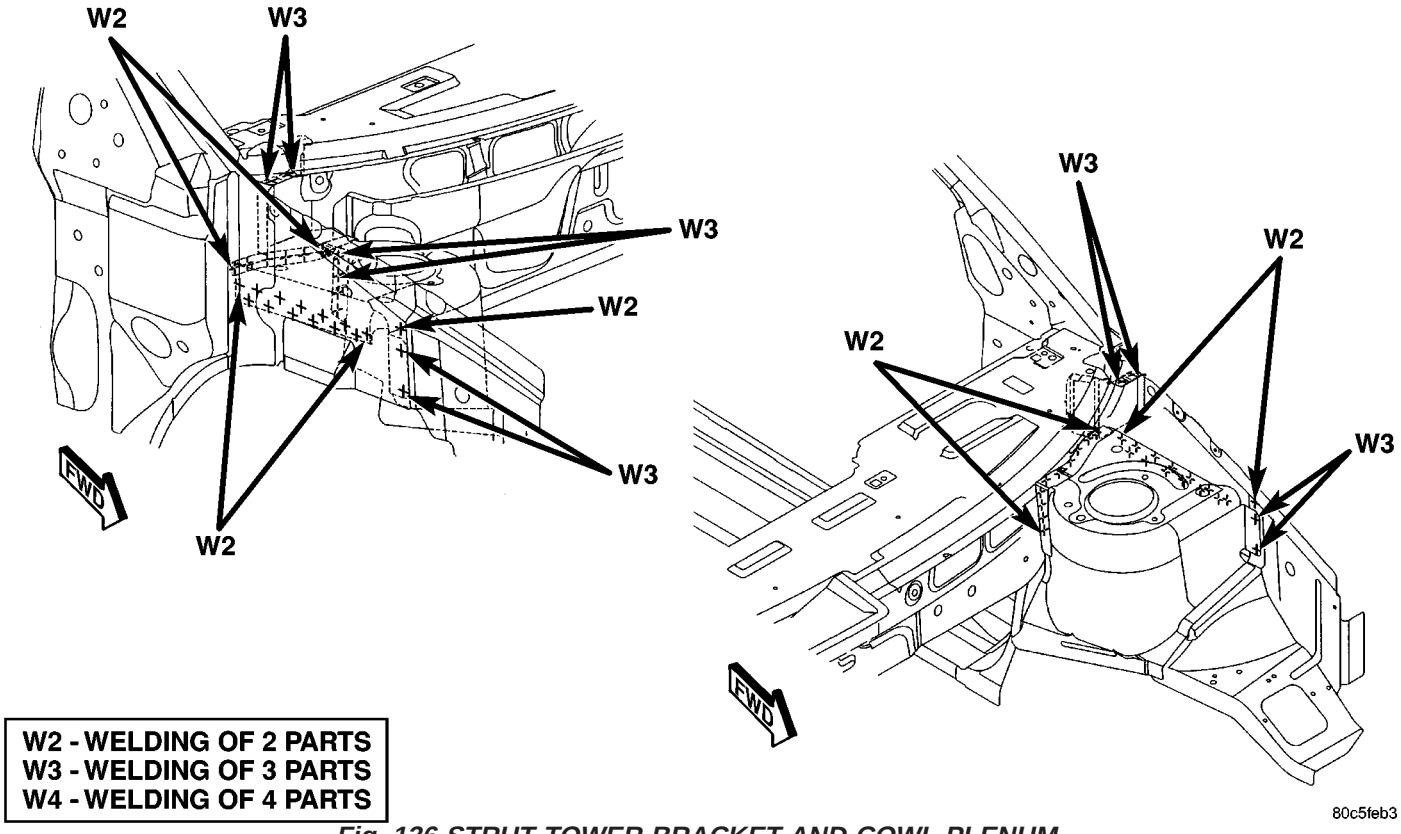

Fig. 136 STRUT TOWER BRACKET AND COWL PLENUM

WELD LOCATIONS (Continued)

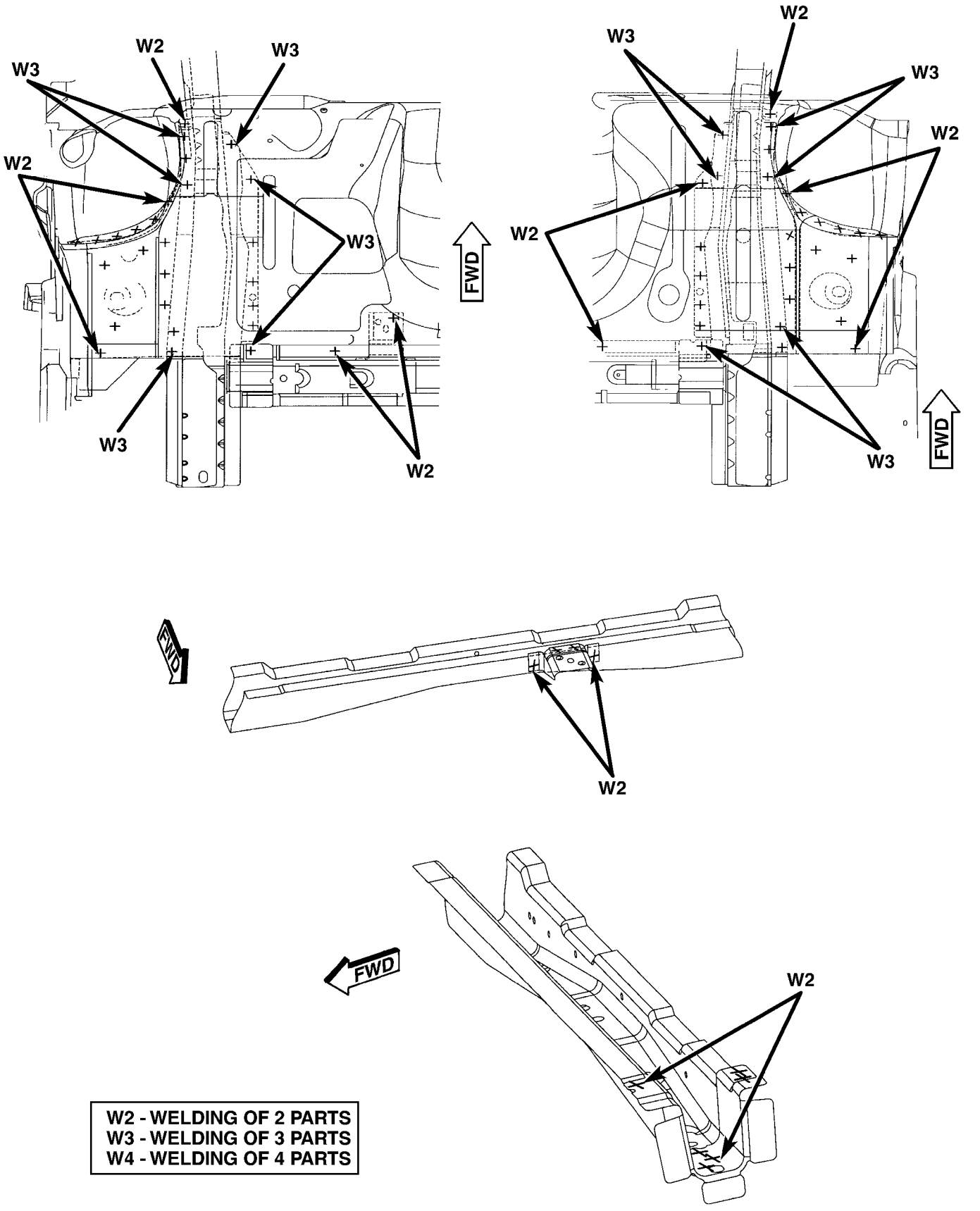

Fig. 137 FRONT SIDE RAILS TO LOWER DASH PANEL

WELD LOCATIONS (Continued)

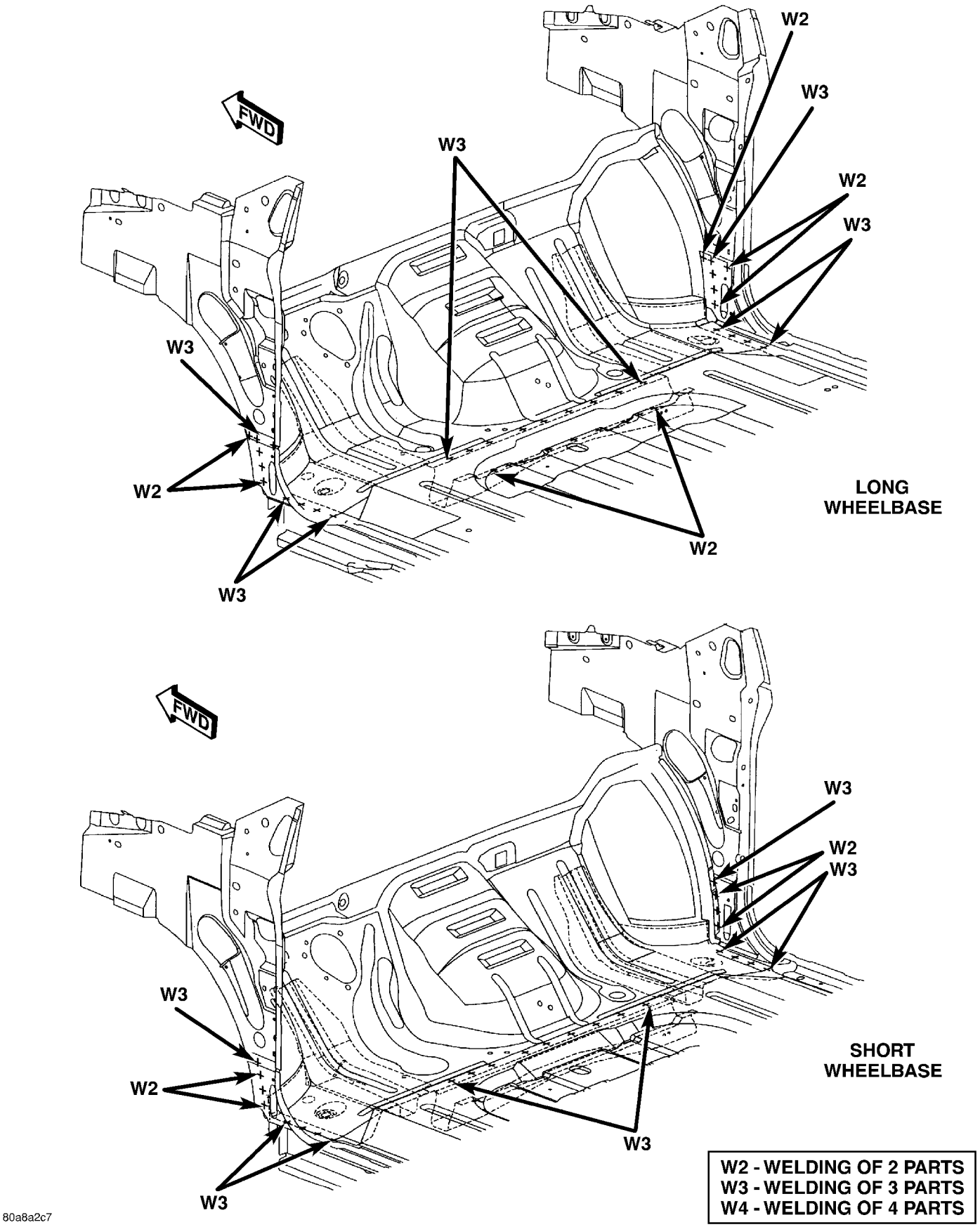

Fig. 138 INNER BODY SIDE SILL TO LOWER DASH PANEL

WELD LOCATIONS (Continued)

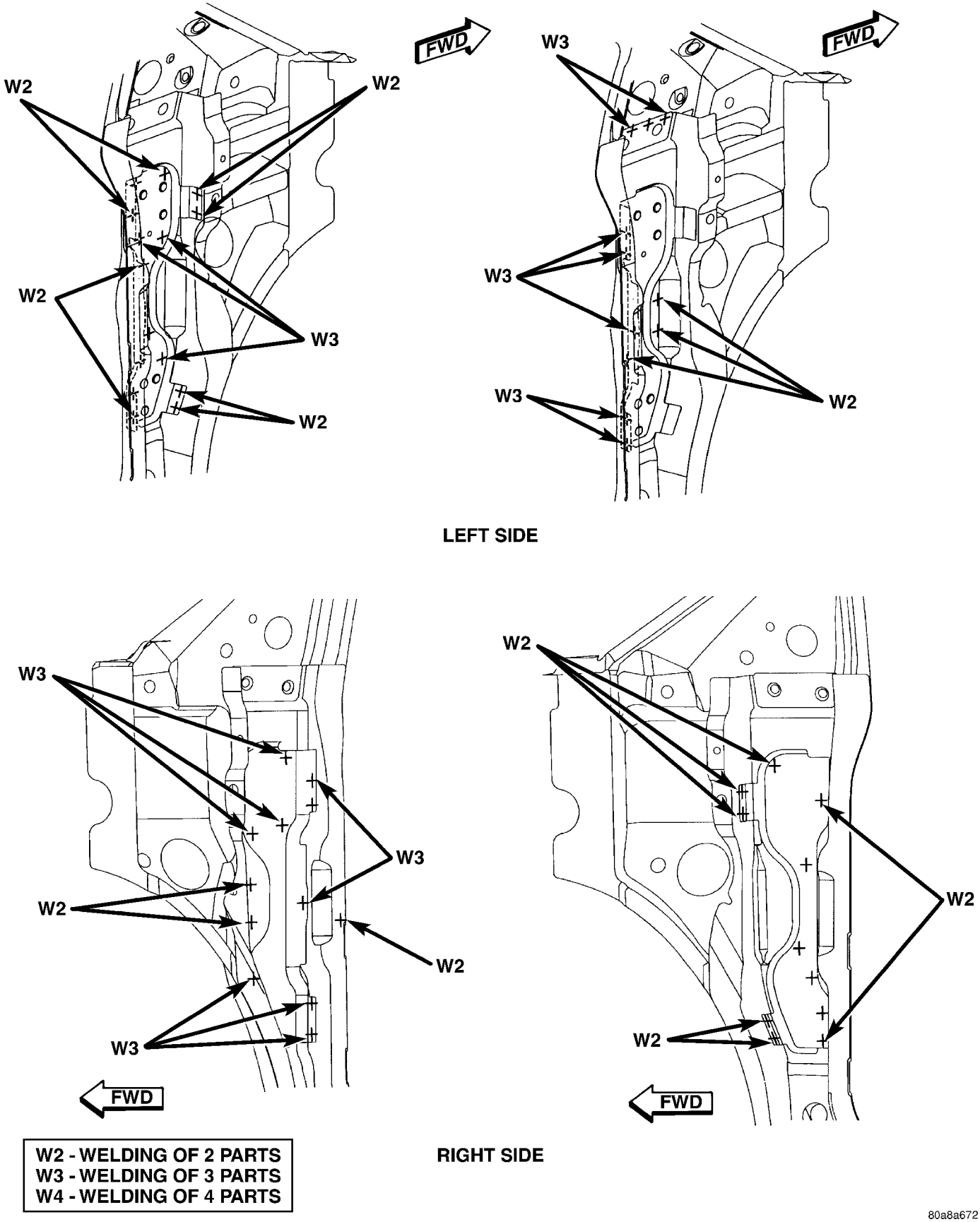

Fig. 139 FRONT HINGE TAPPING PLATE

WELD LOCATIONS (Continued)

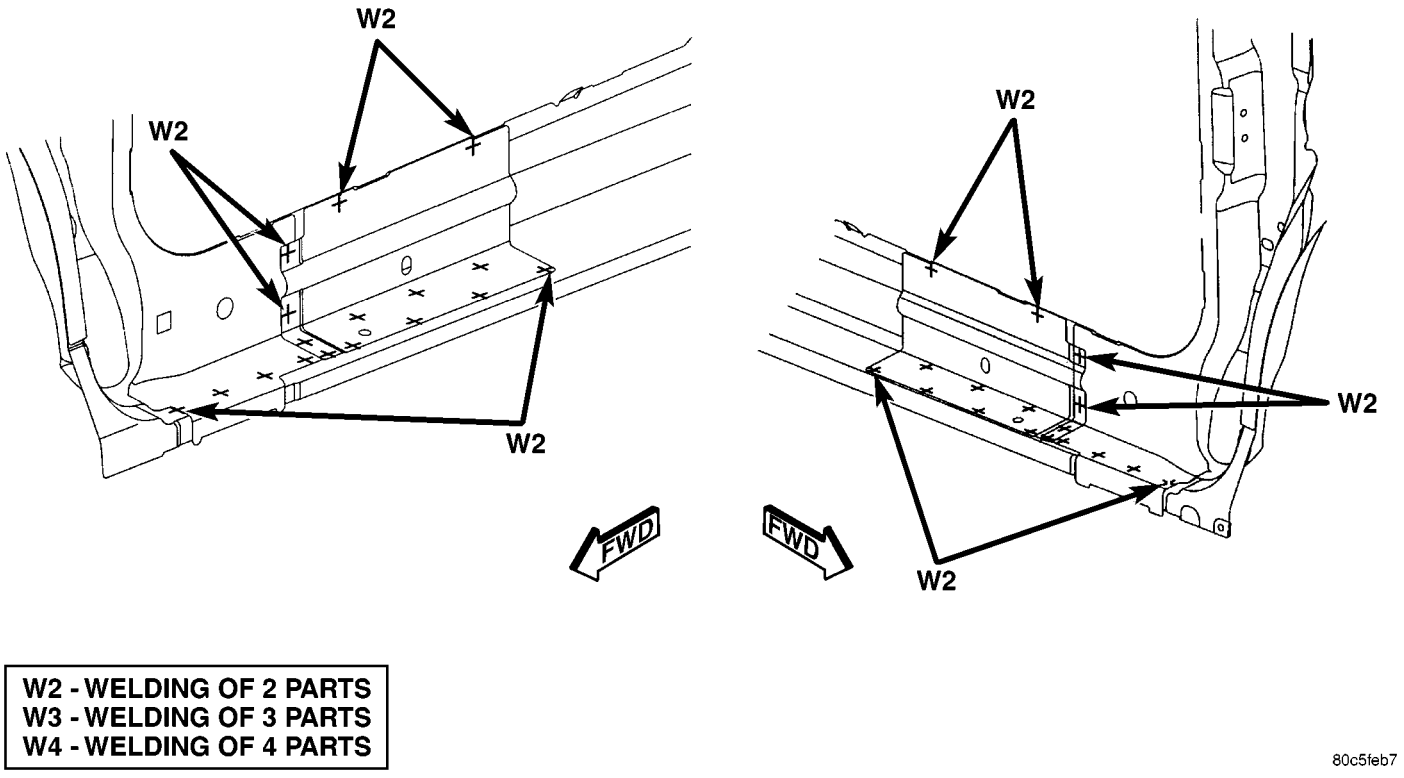

Fig. 140 FRONT HINGE PILLAR

WELD LOCATIONS (Continued)

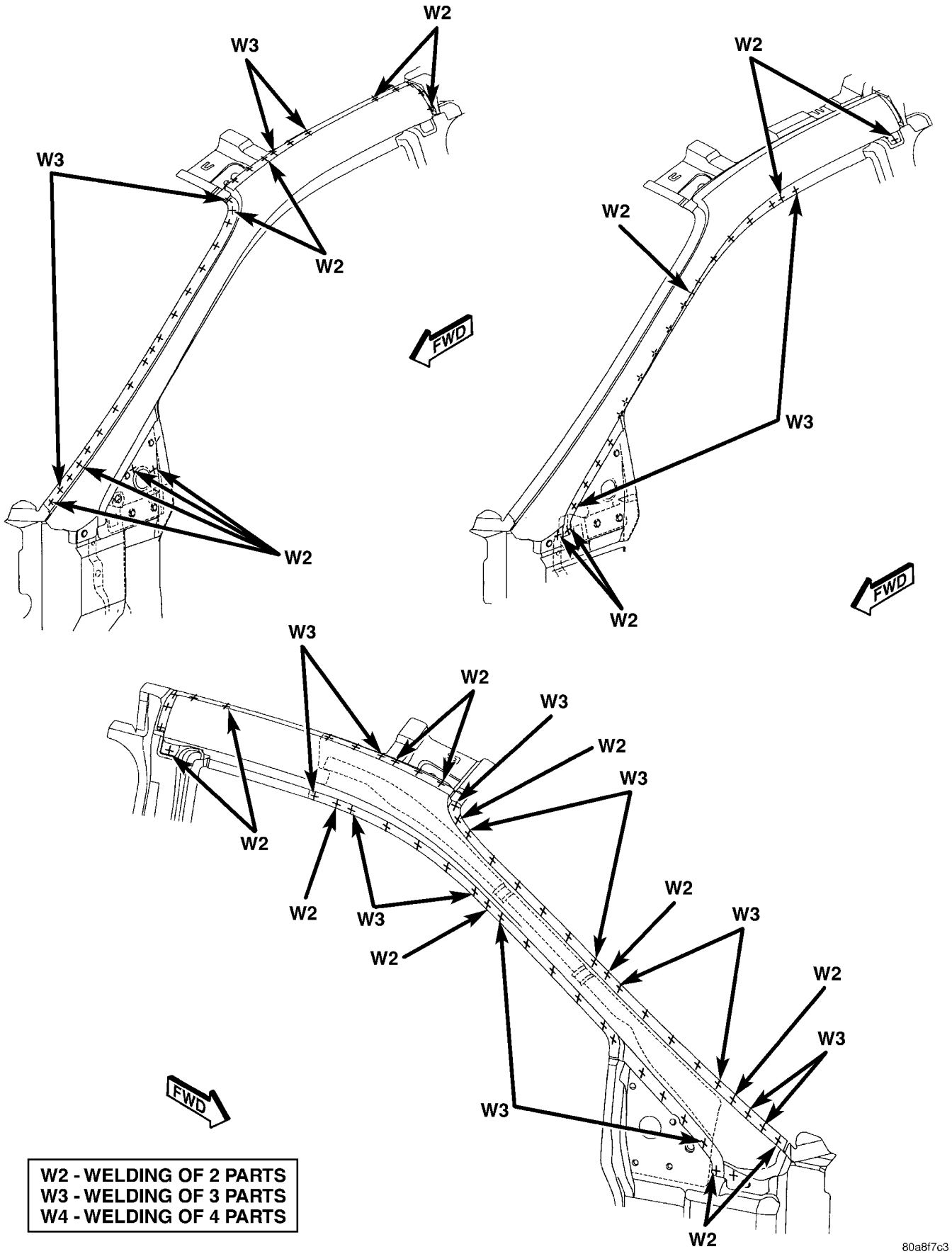

Fig. 141 INNER WINDSHIELD FRAME

WELD LOCATIONS (Continued)

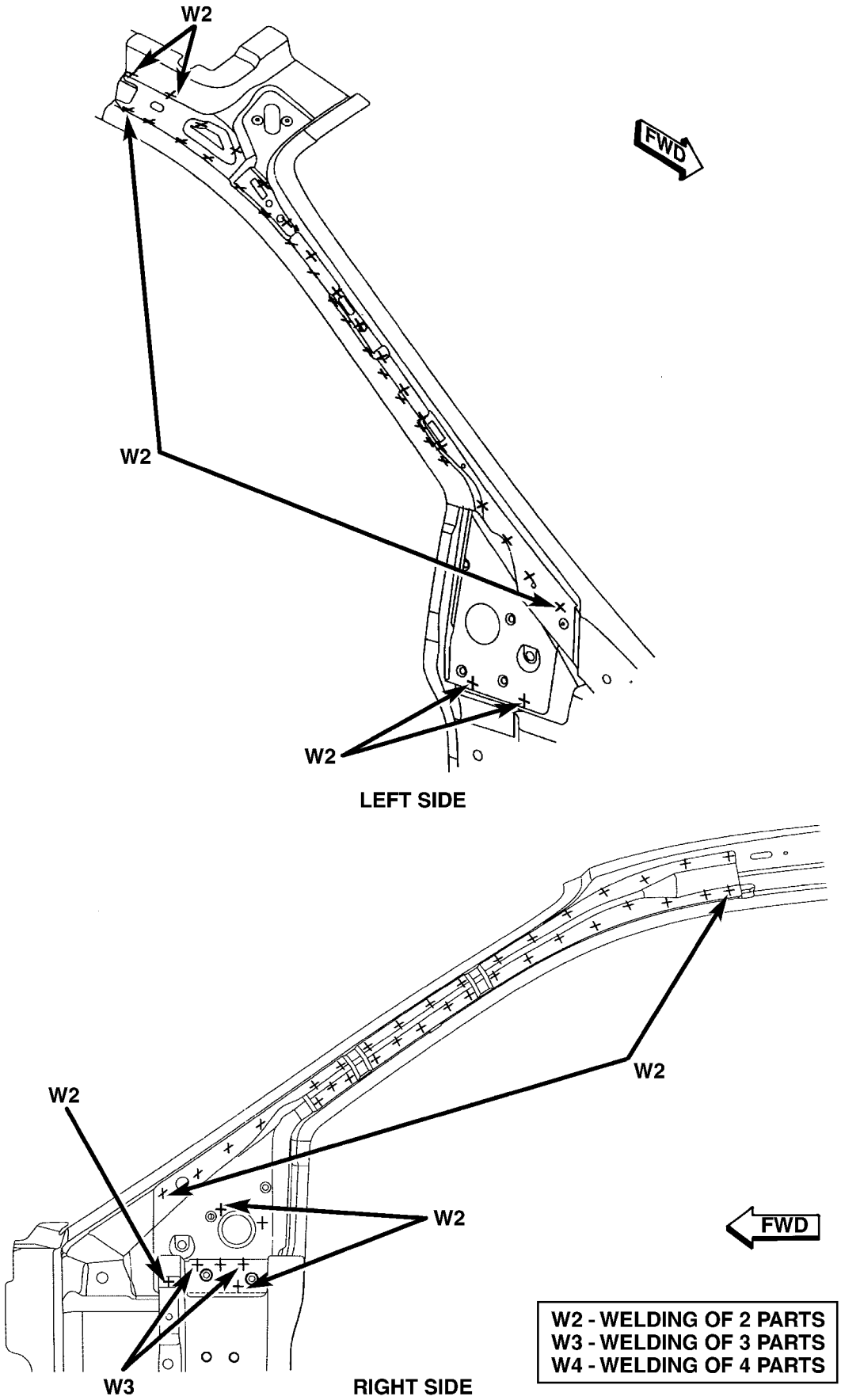

Fig. 142 WINDSHIELD FRAME

WELD LOCATIONS (Continued)

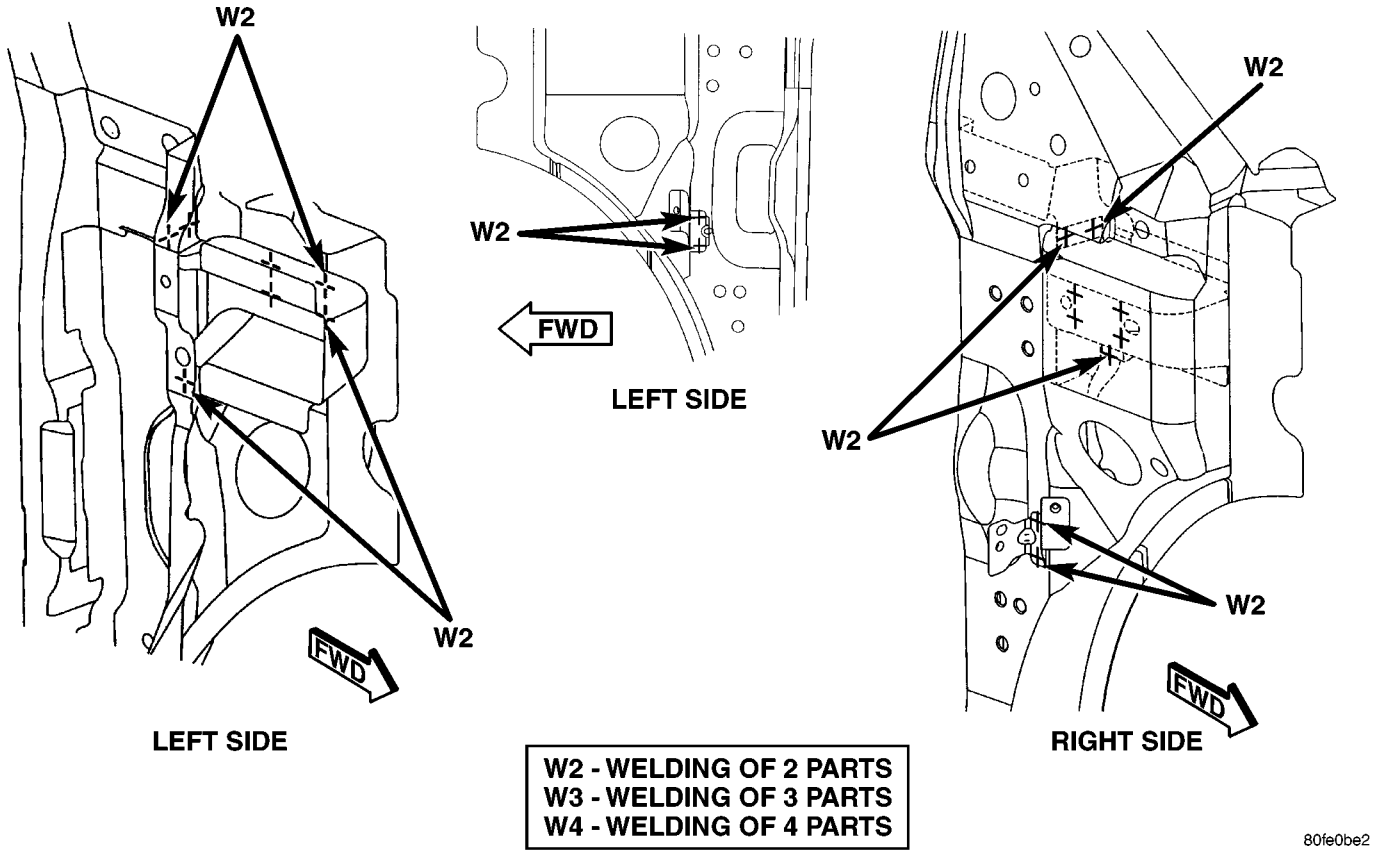

Fig. 143 FENDER BRACKET

WELD LOCATIONS (Continued)

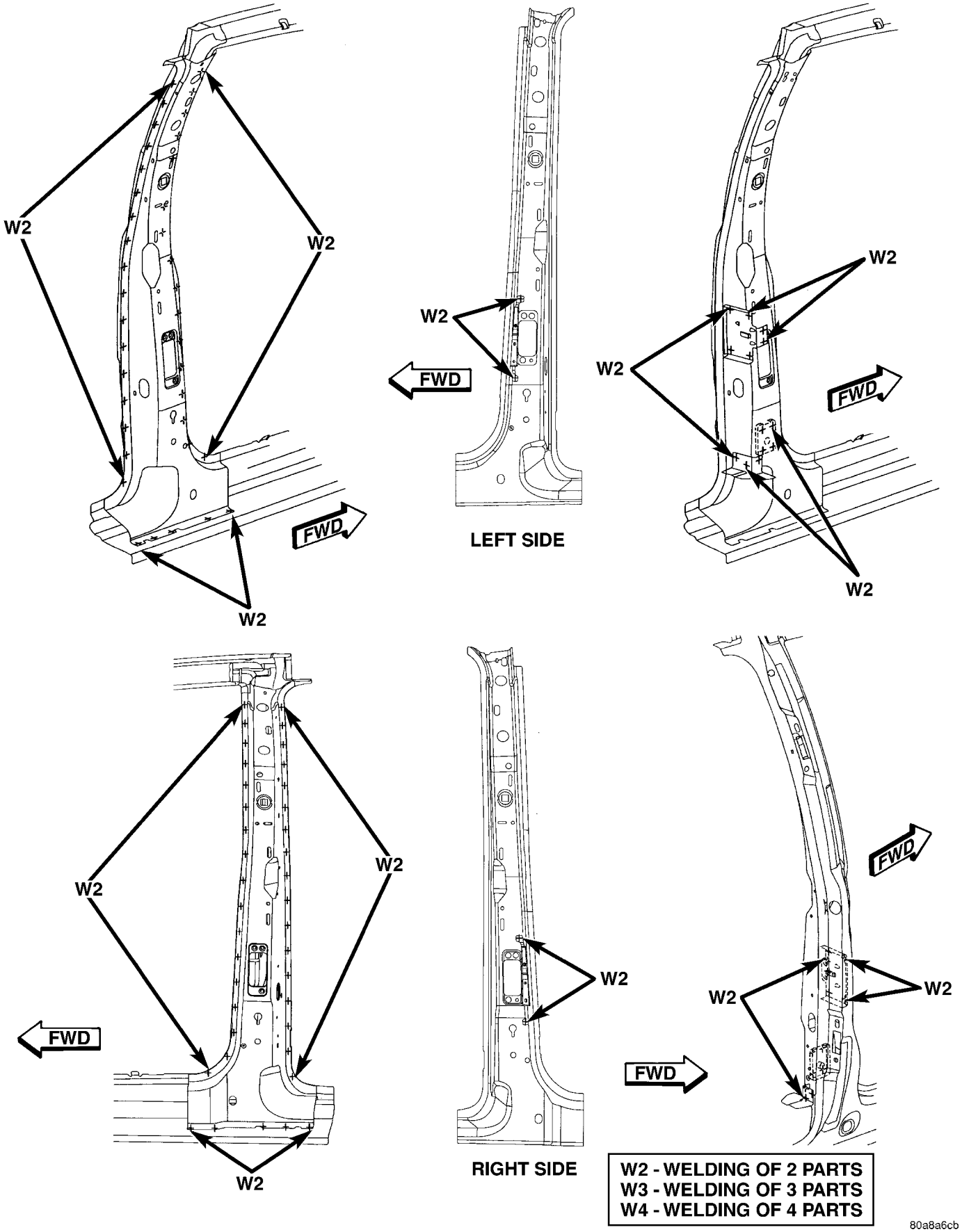

Fig. 144 INNER B-PILLAR

WELD LOCATIONS (Continued)

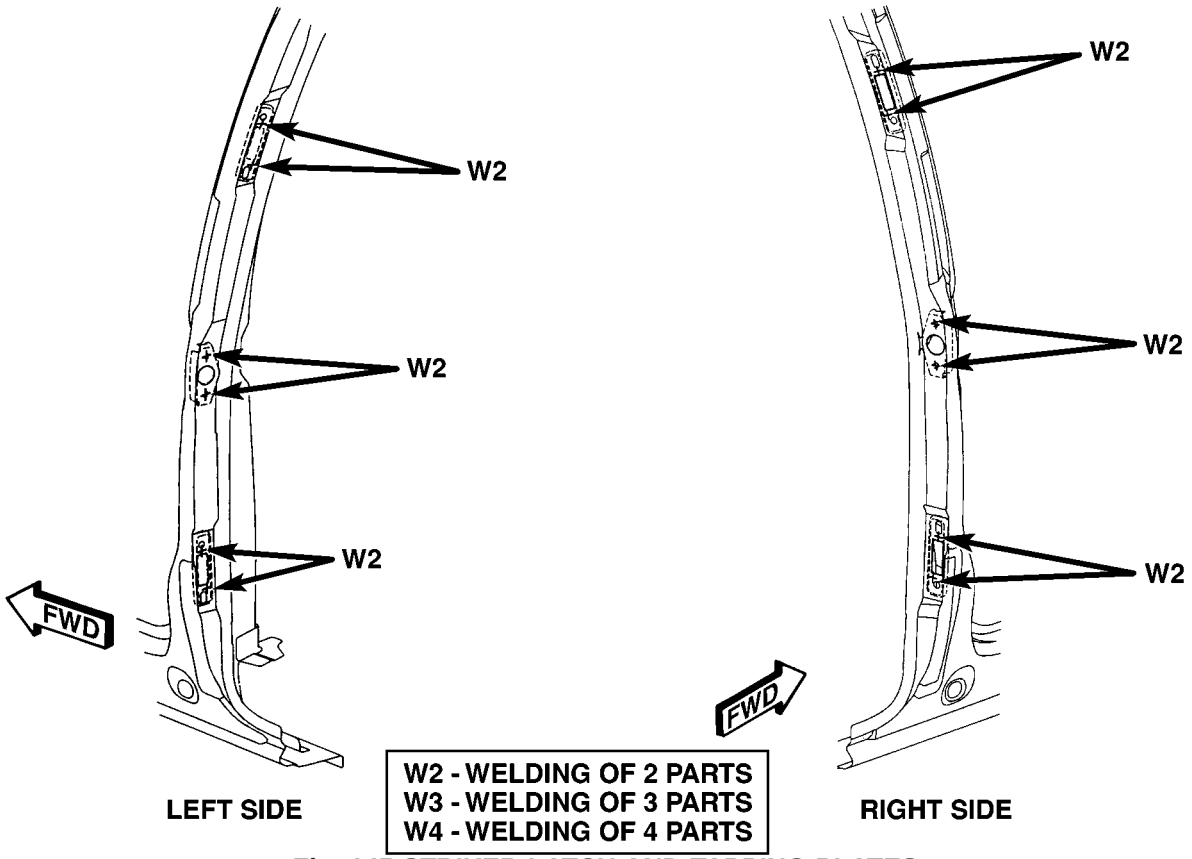

Fig. 145 STRIKER LATCH AND TAPPING PLATES

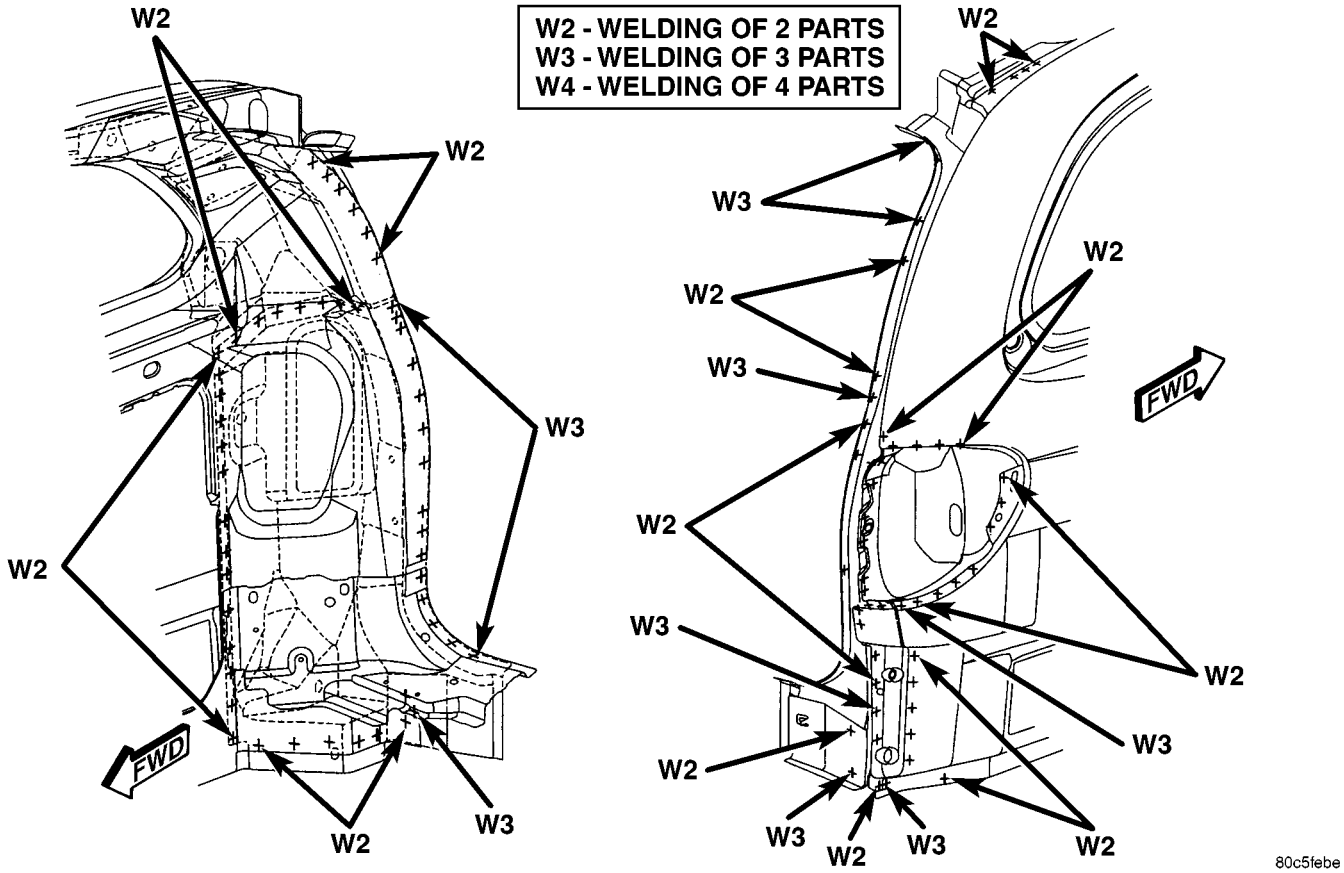

Fig. 146 RIGHT REAR INNER QUARTER PANEL - LONG WHEEL BASE ONLY

WELD LOCATIONS (Continued)

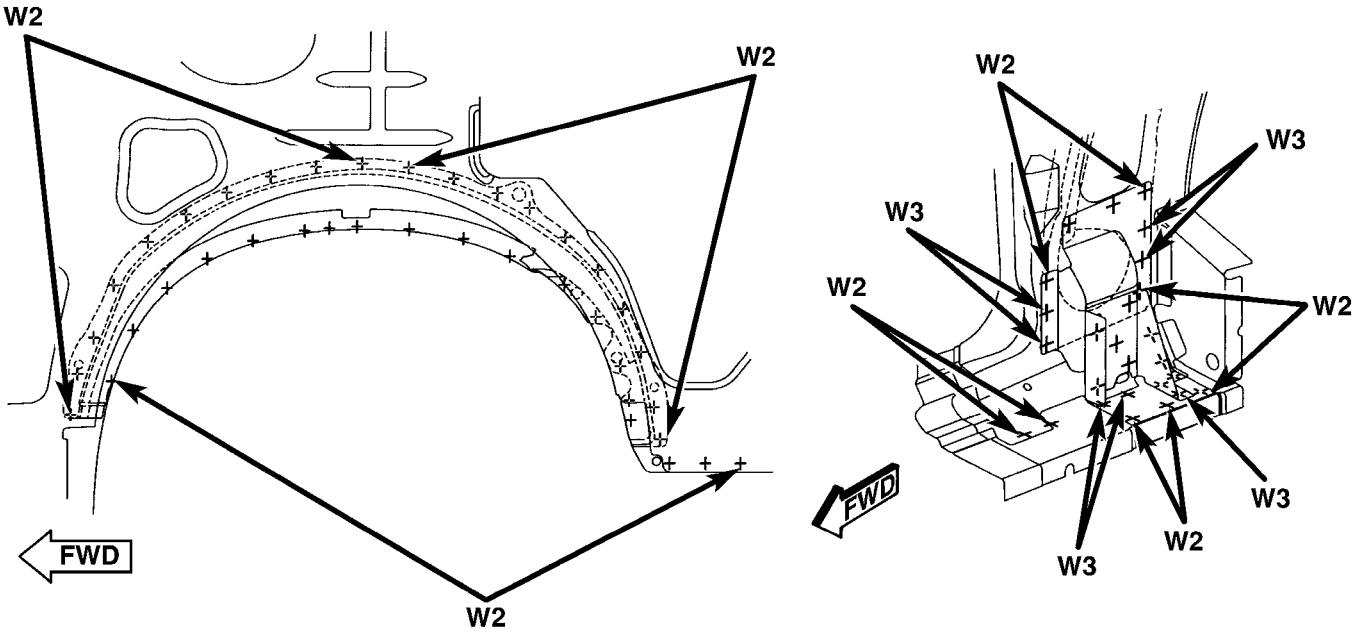

Fig. 147 RIGHT REAR INNER QUARTER PANEL/OUTER WHEELHOUSE - LONG WHEEL BASE ONLY

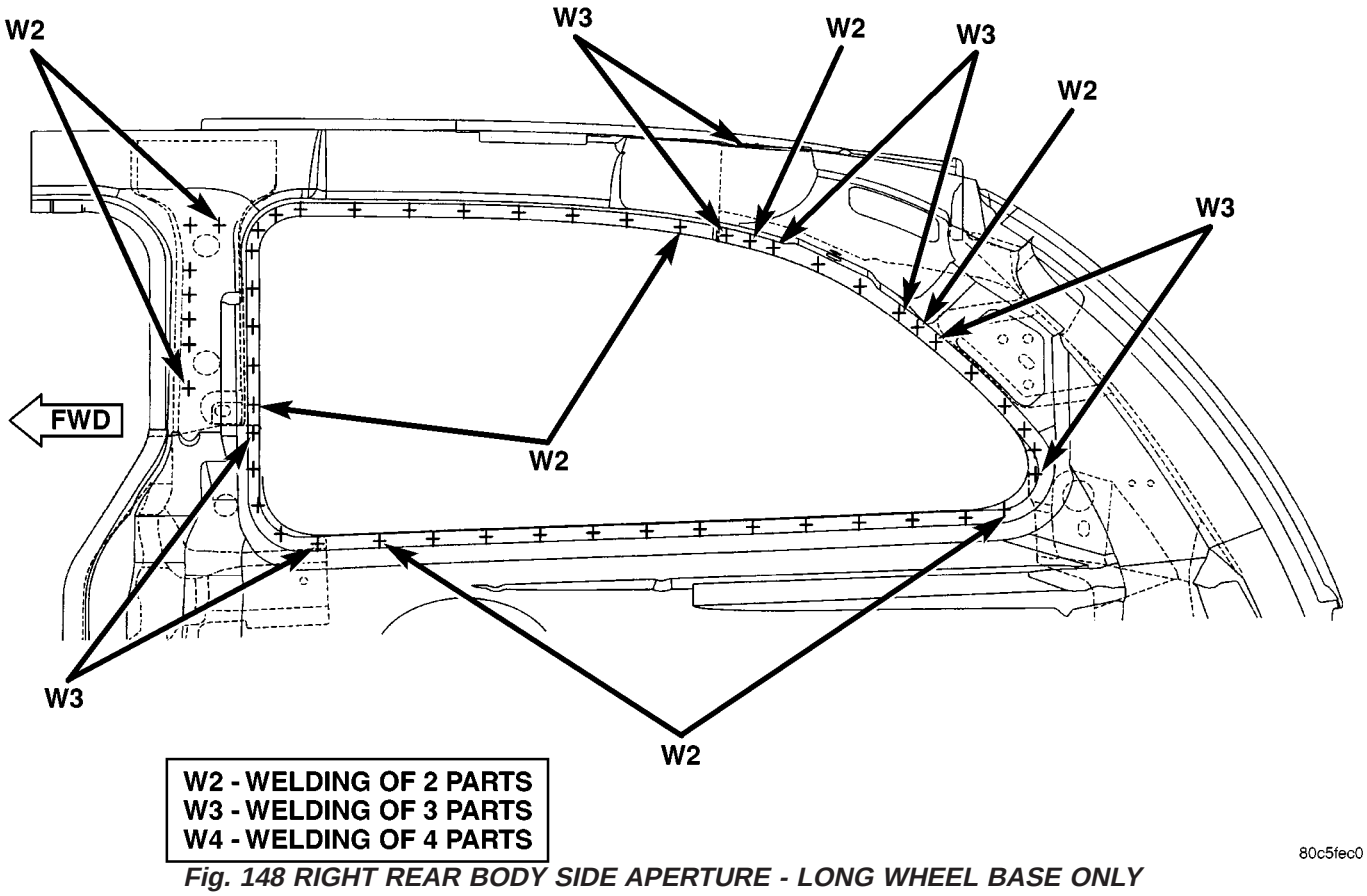

Fig. 148 RIGHT REAR BODY SIDE APERTURE - LONG WHEEL BASE ONLY

WELD LOCATIONS (Continued)

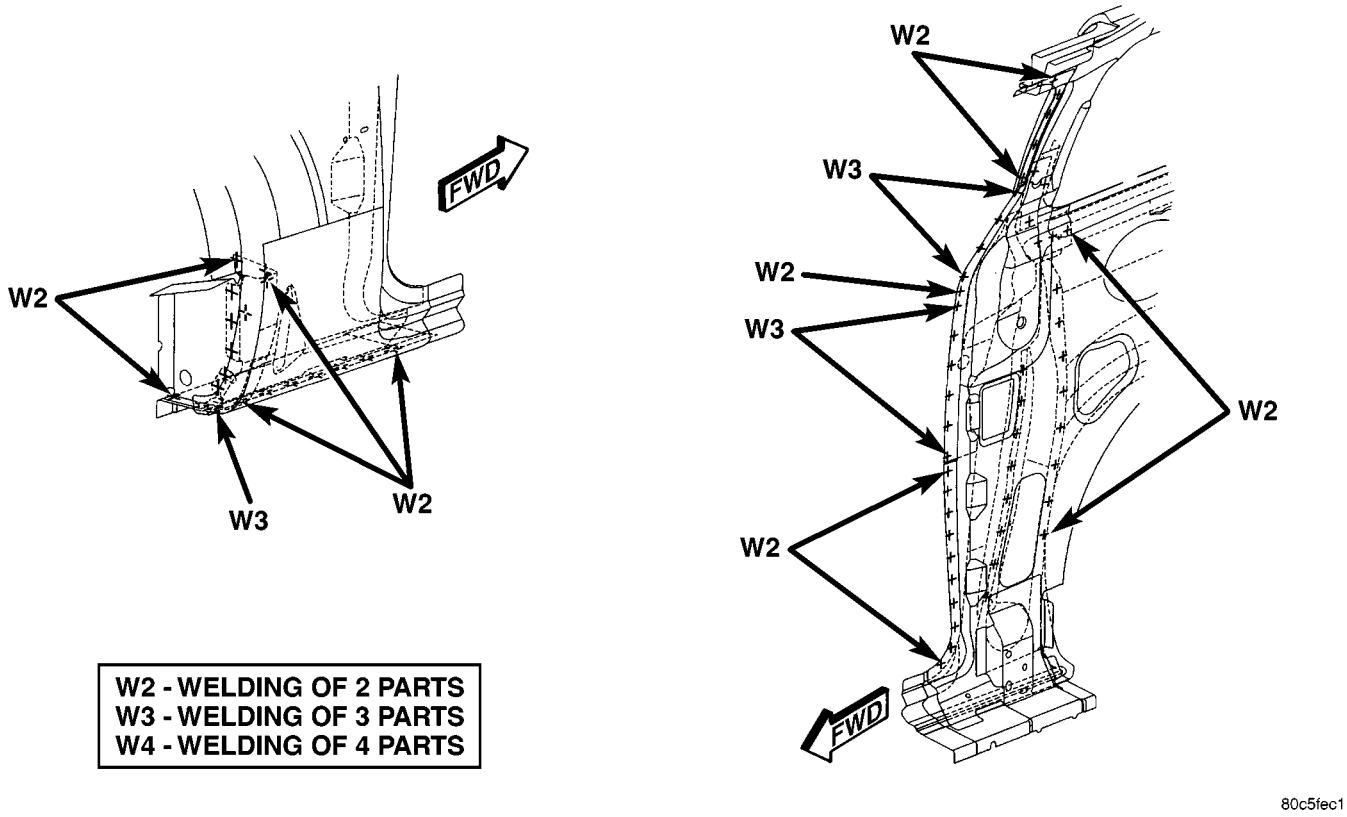

Fig. 149 STRIKER LATCH REINFORCEMENT - LONG WHEEL BASE ONLY

WELD LOCATIONS (Continued)

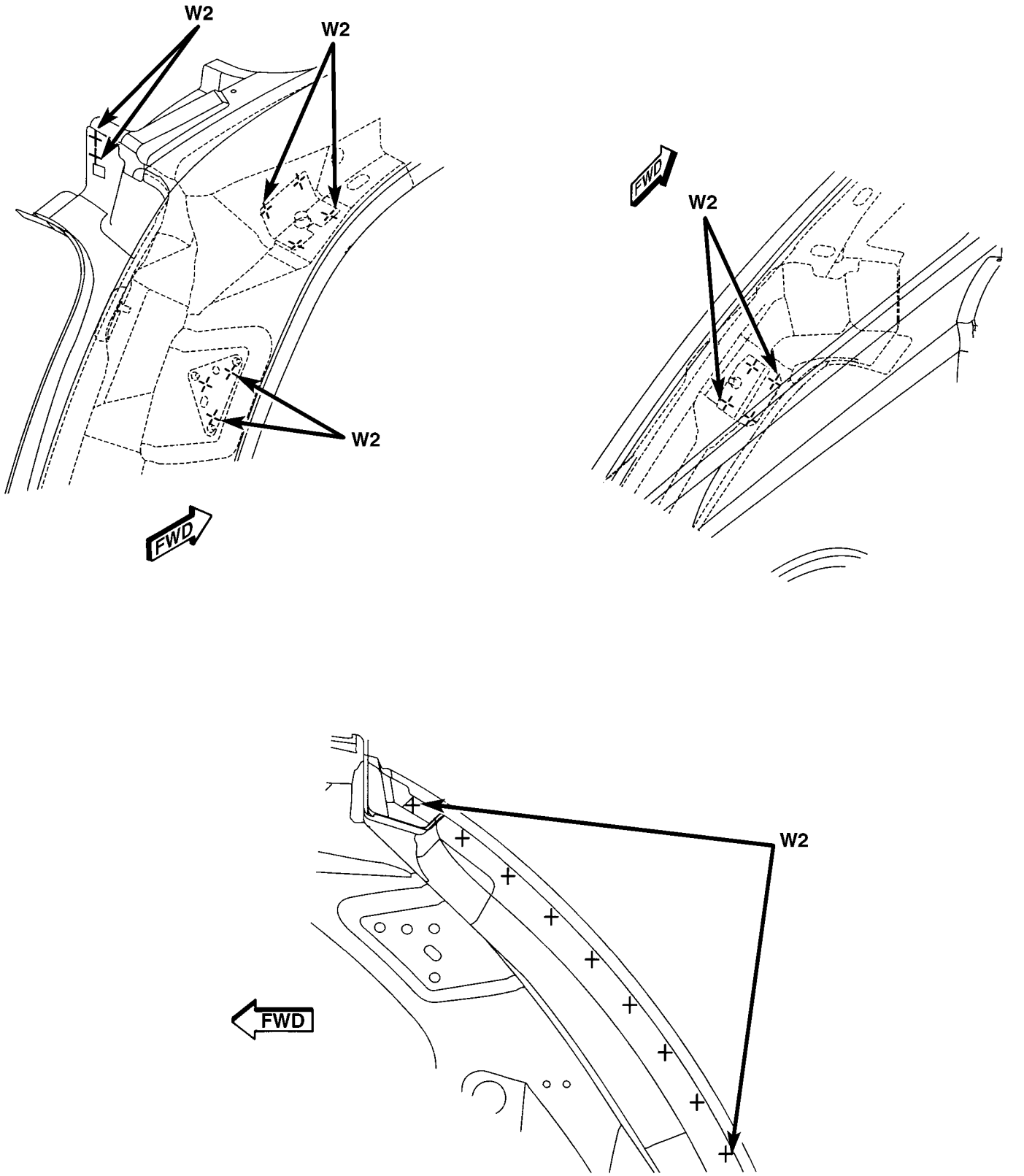

Fig. 150 BELT TAPPING PLATE - LONG WHEEL BASE ONLY

WELD LOCATIONS (Continued)

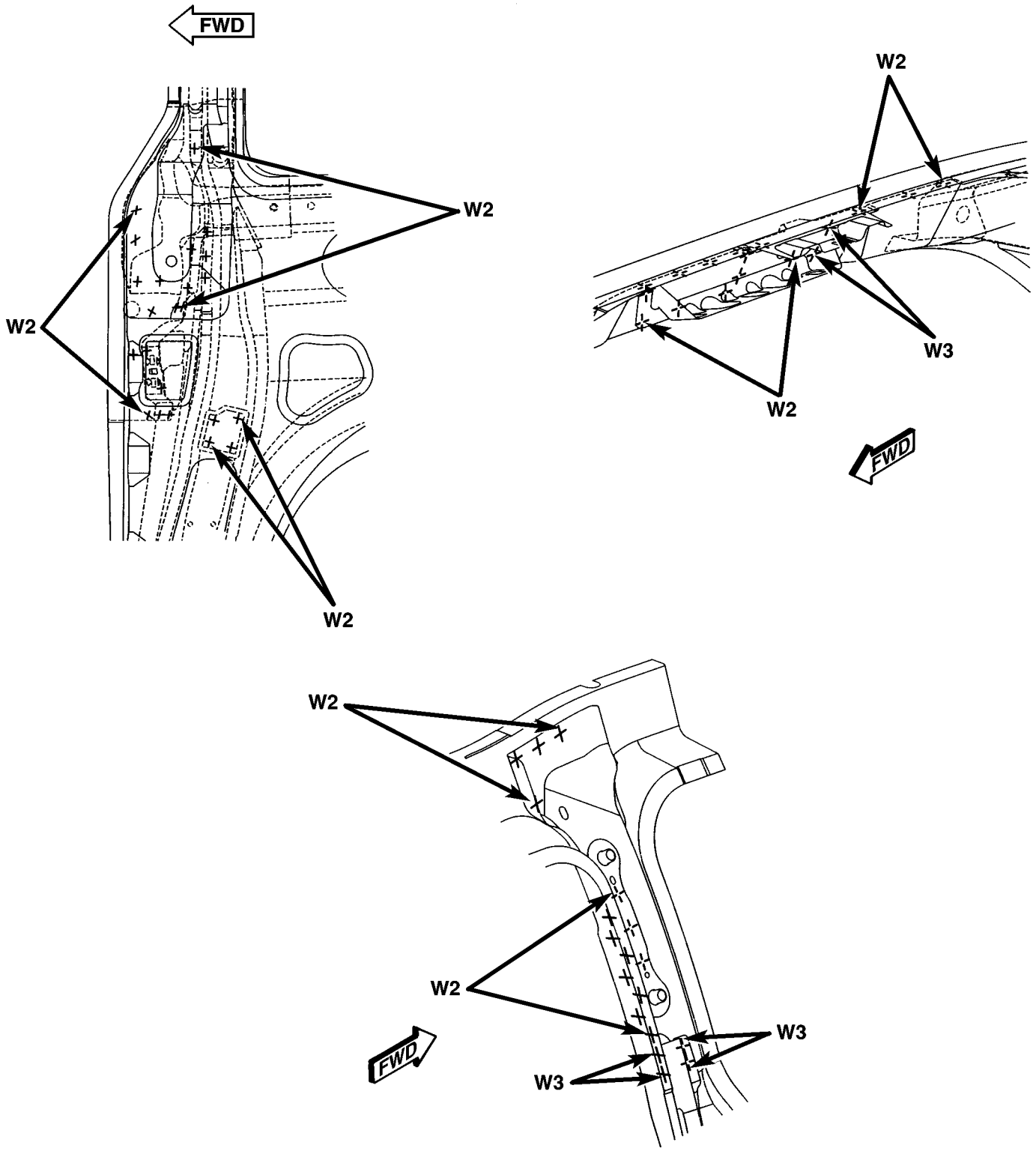

Fig. 151 C-PILLAR REINFORCEMENT - LONG WHEEL BASE ONLY

WELD LOCATIONS (Continued)

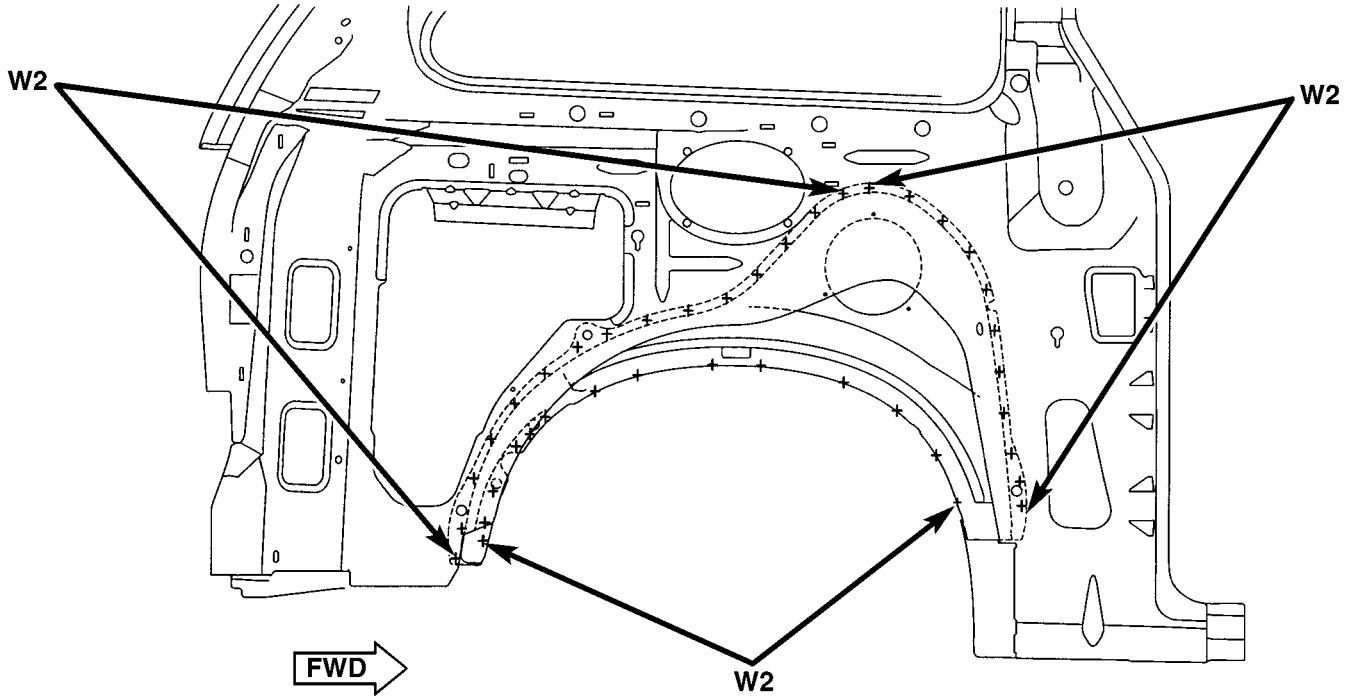

W2 - WELDING OF 2 PARTS
W3 - WELDING OF 3 PARTS
W4 - WELDING OF 4 PARTS

80c5fec4

Fig. 152 OUTER WHEELHOUSE - LONG WHEEL BASE ONLY

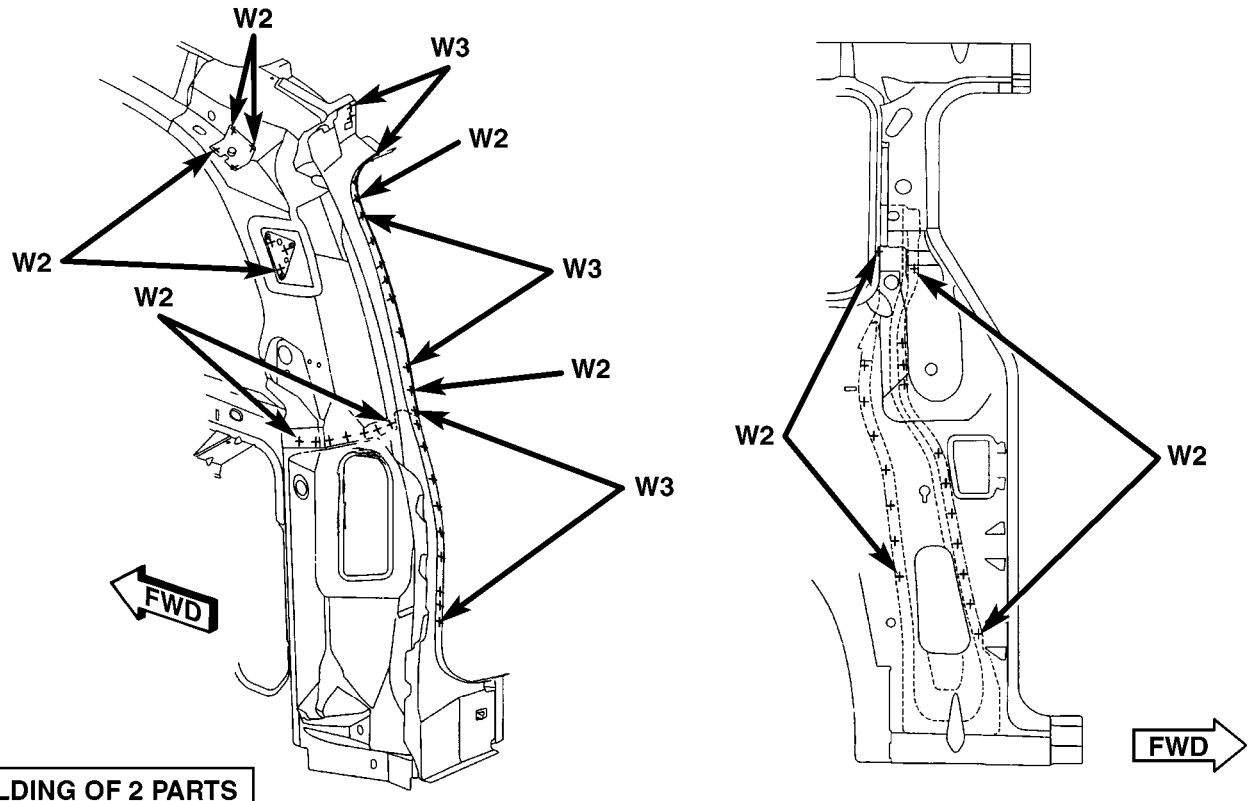

W2 - WELDING OF 2 PARTS
W3 - WELDING OF 3 PARTS
W4 - WELDING OF 4 PARTS

80fe0cb9

Fig. 153 C AND D-PILLAR INNER REINFORCEMENTS - LONG WHEEL BASE ONLY

WELD LOCATIONS (Continued)

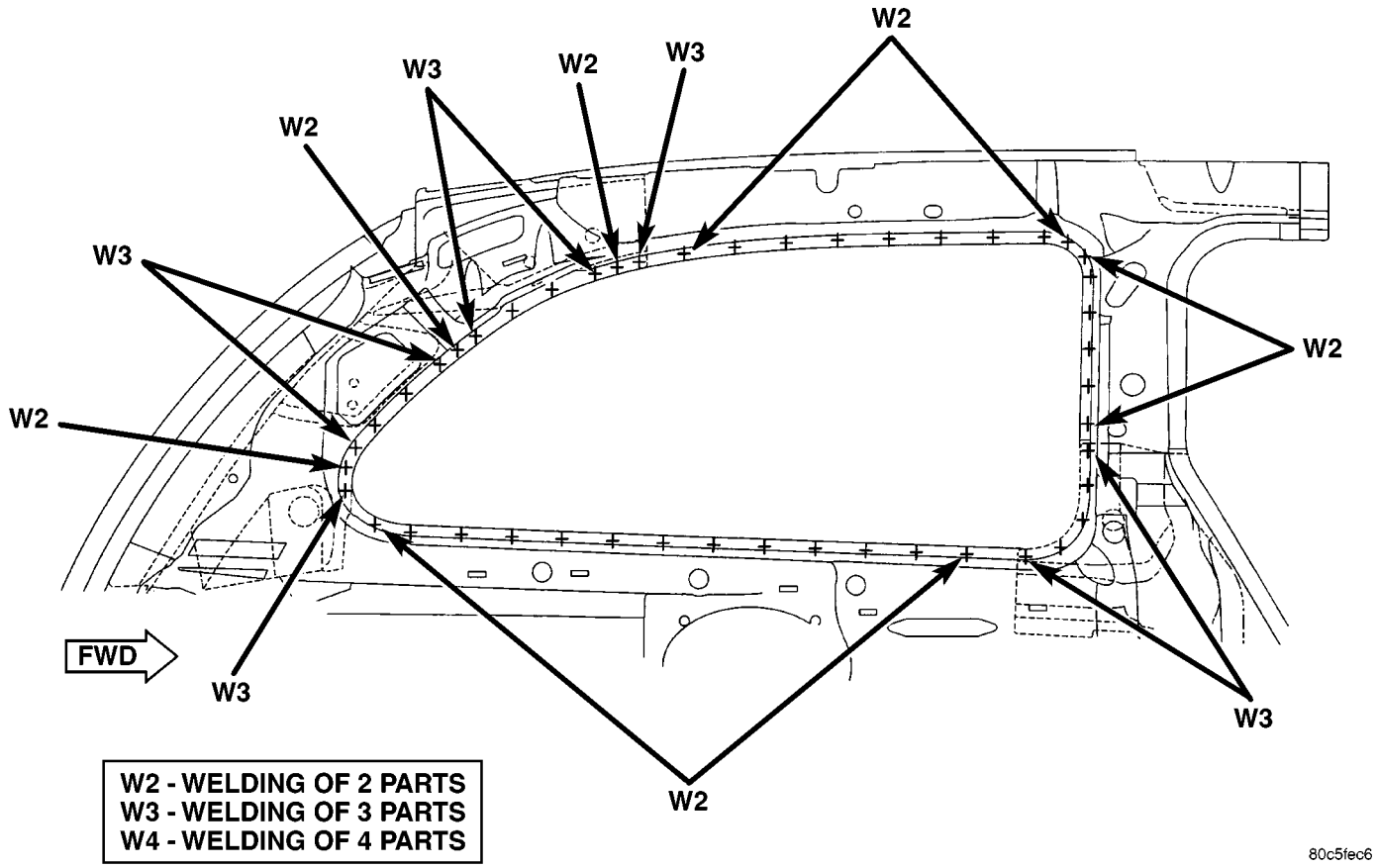

Fig. 154 LEFT REAR INNER QUARTER PANEL - LONG WHEEL BASE ONLY

WELD LOCATIONS (Continued)

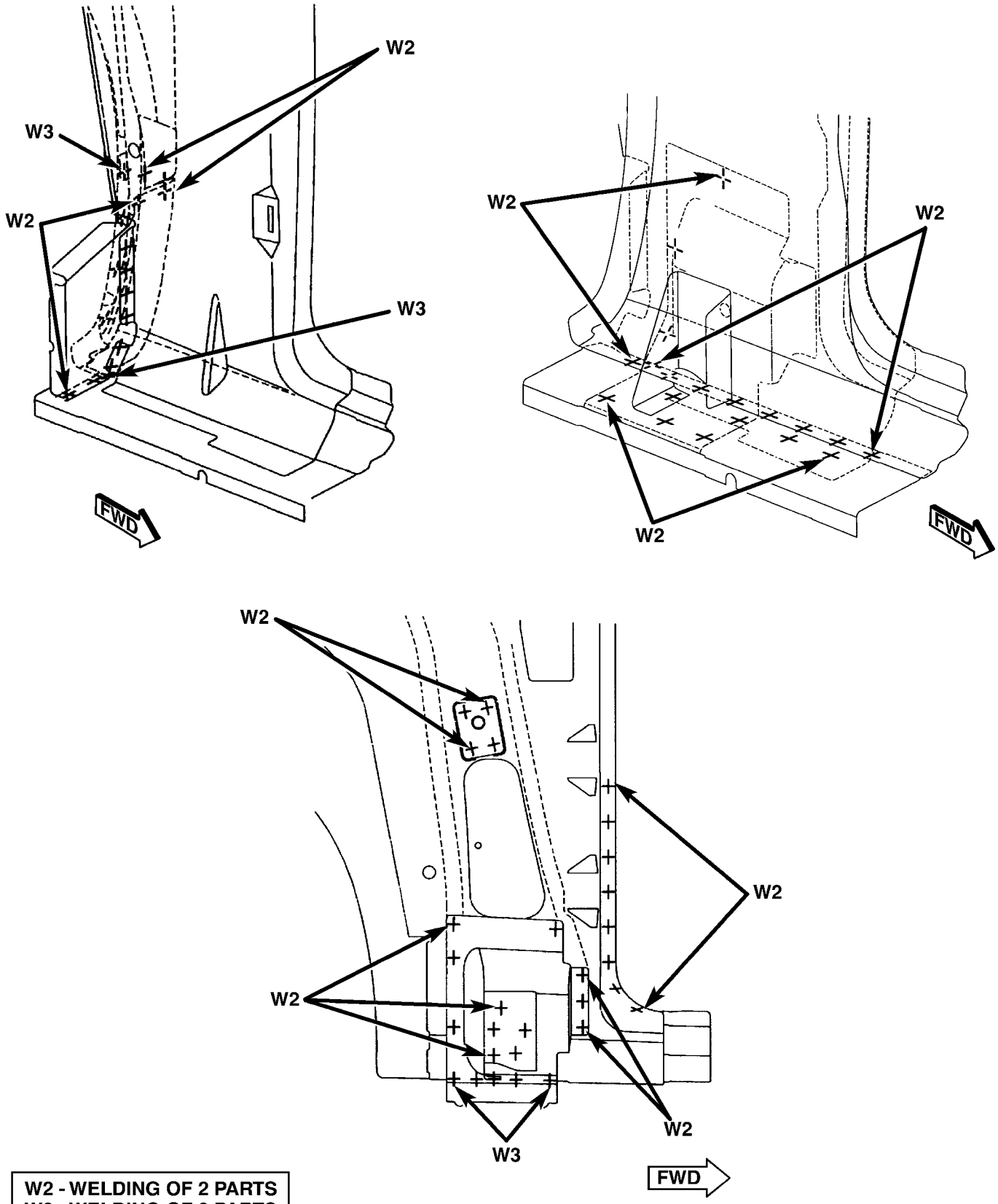

80a8aaf4

Fig. 155 OUTER WHEELHOUSE EXTENSION - LONG WHEEL BASE ONLY

WELD LOCATIONS (Continued)

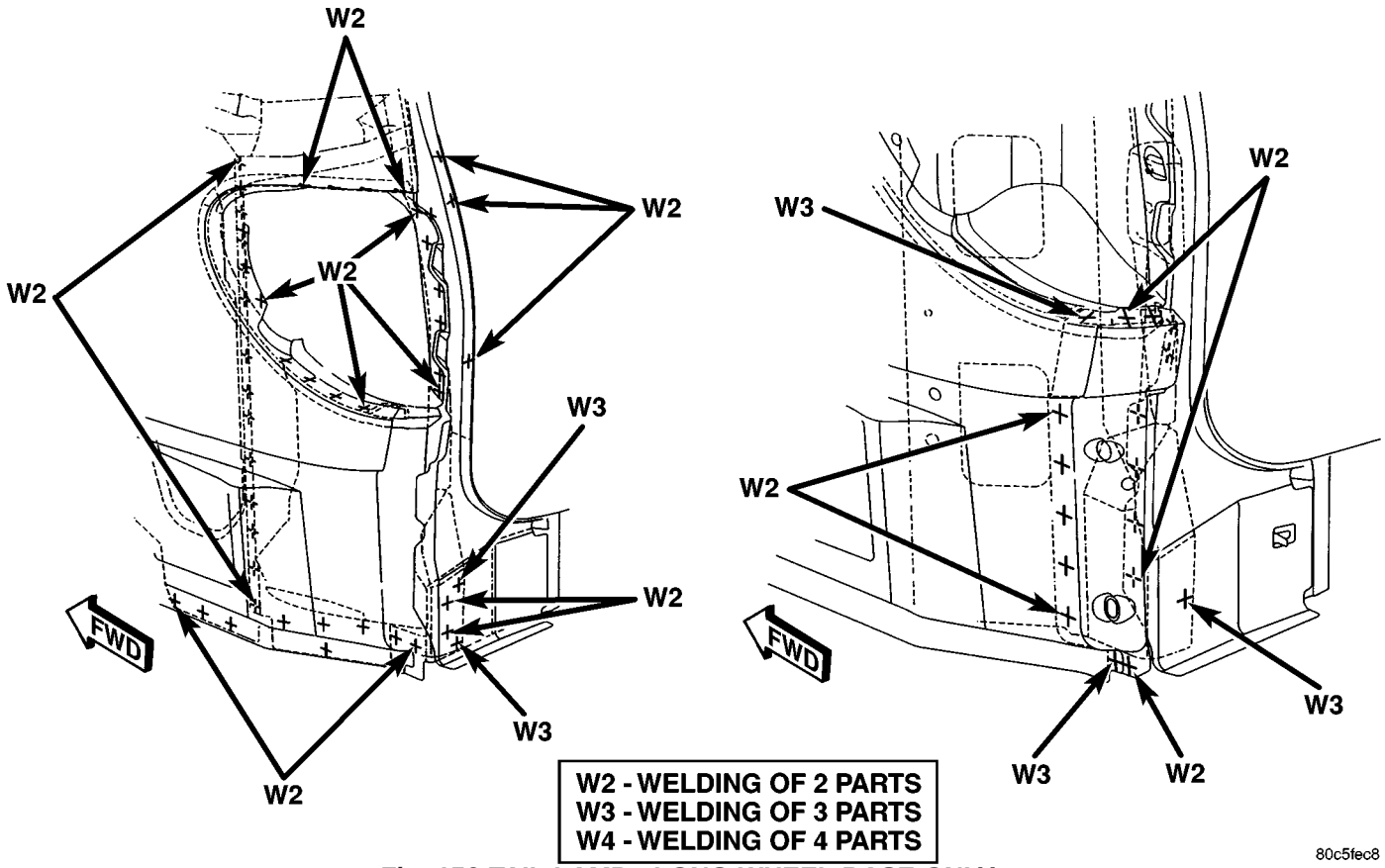

Fig. 156 TAIL LAMP - LONG WHEEL BASE ONLY

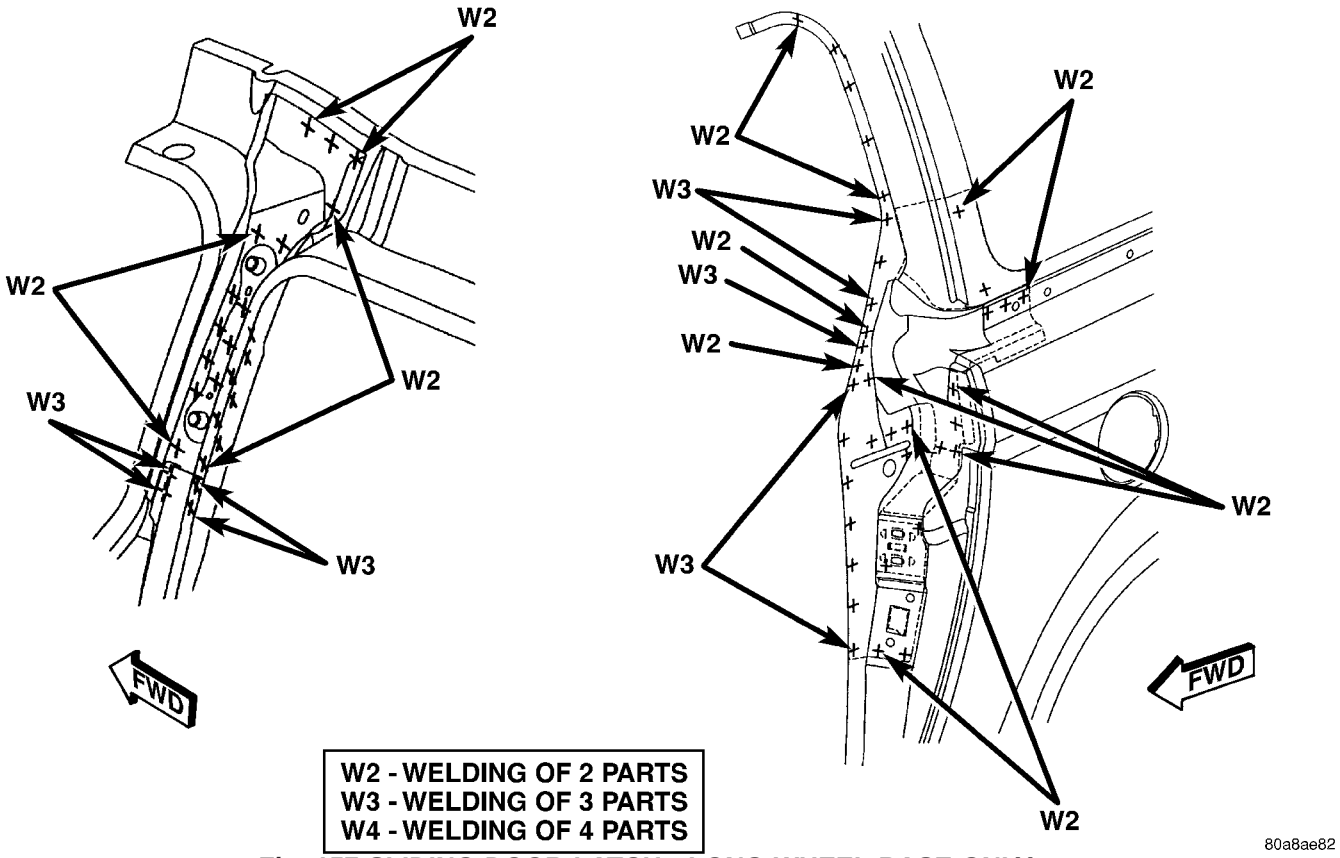

Fig. 157 SLIDING DOOR LATCH - LONG WHEEL BASE ONLY

WELD LOCATIONS (Continued)

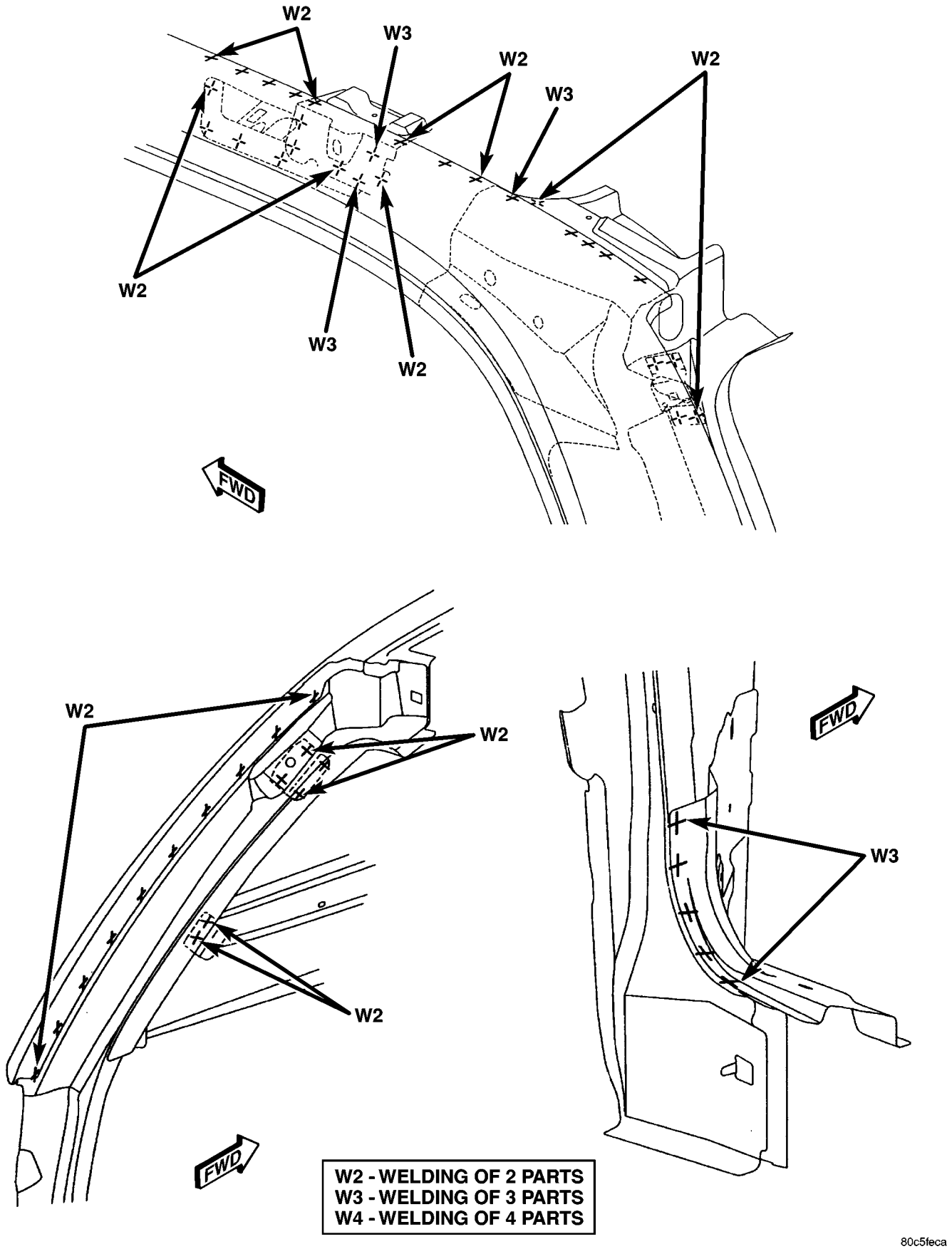

Fig. 158 ROOF BOW EXTENSION - LONG WHEEL BASE ONLY

WELD LOCATIONS (Continued)

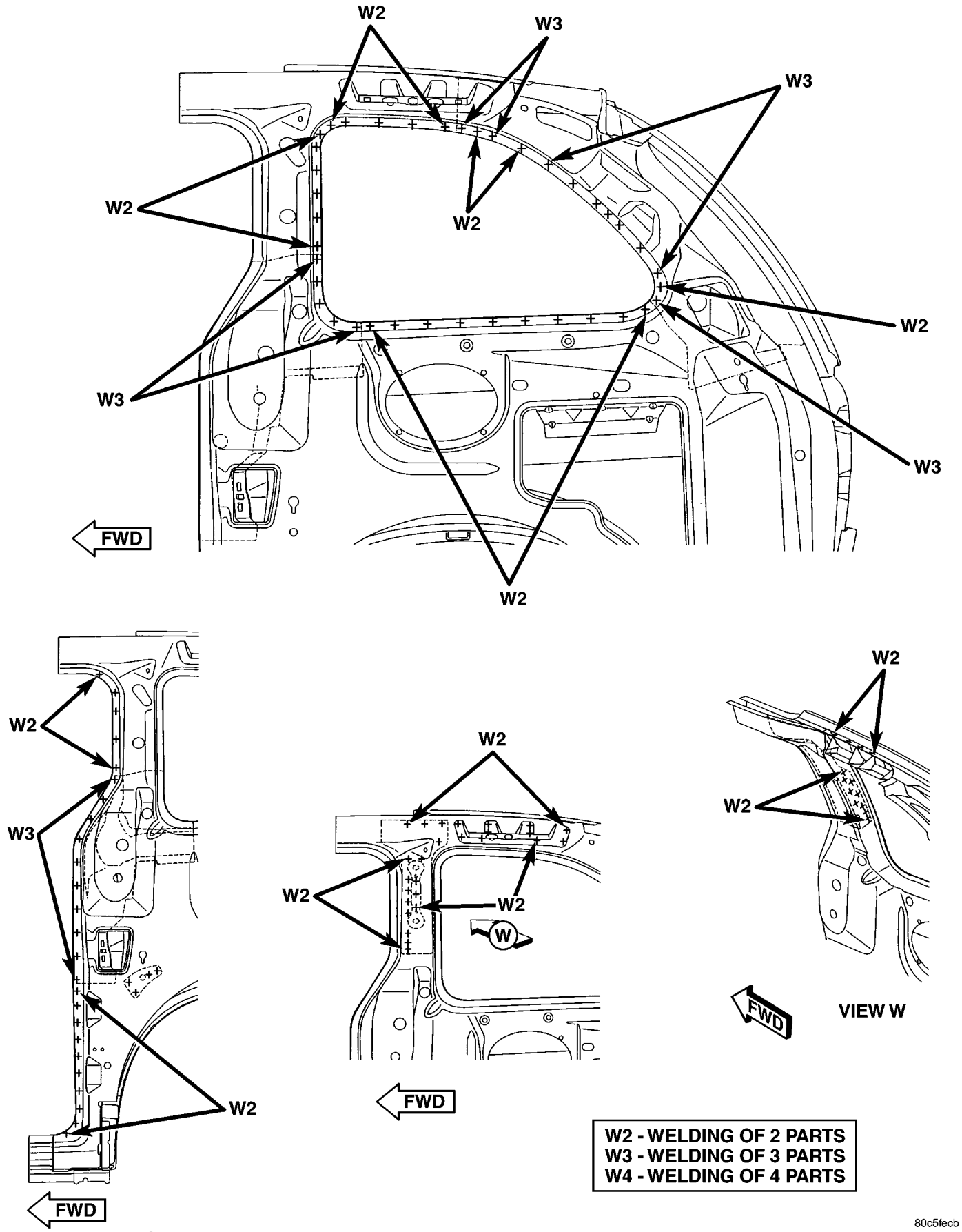

Fig. 159 RIGHT REAR INNER QUARTER PANEL - SHORT WHEEL BASE ONLY

WELD LOCATIONS (Continued)

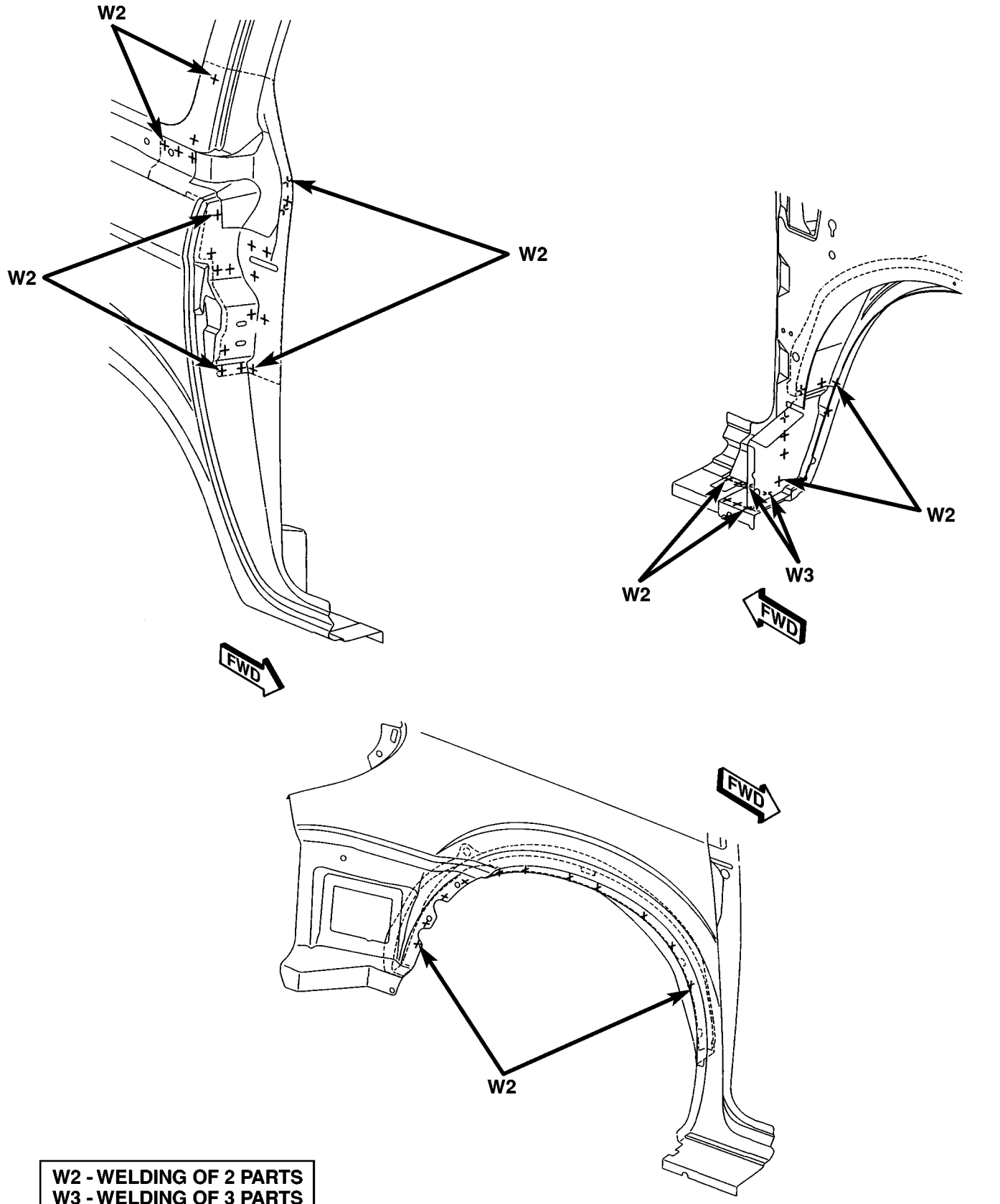

Fig. 160 LATCH REINFORCEMENT AND OUTER WHEELHOUSE - SHORT WHEEL BASE ONLY

WELD LOCATIONS (Continued)

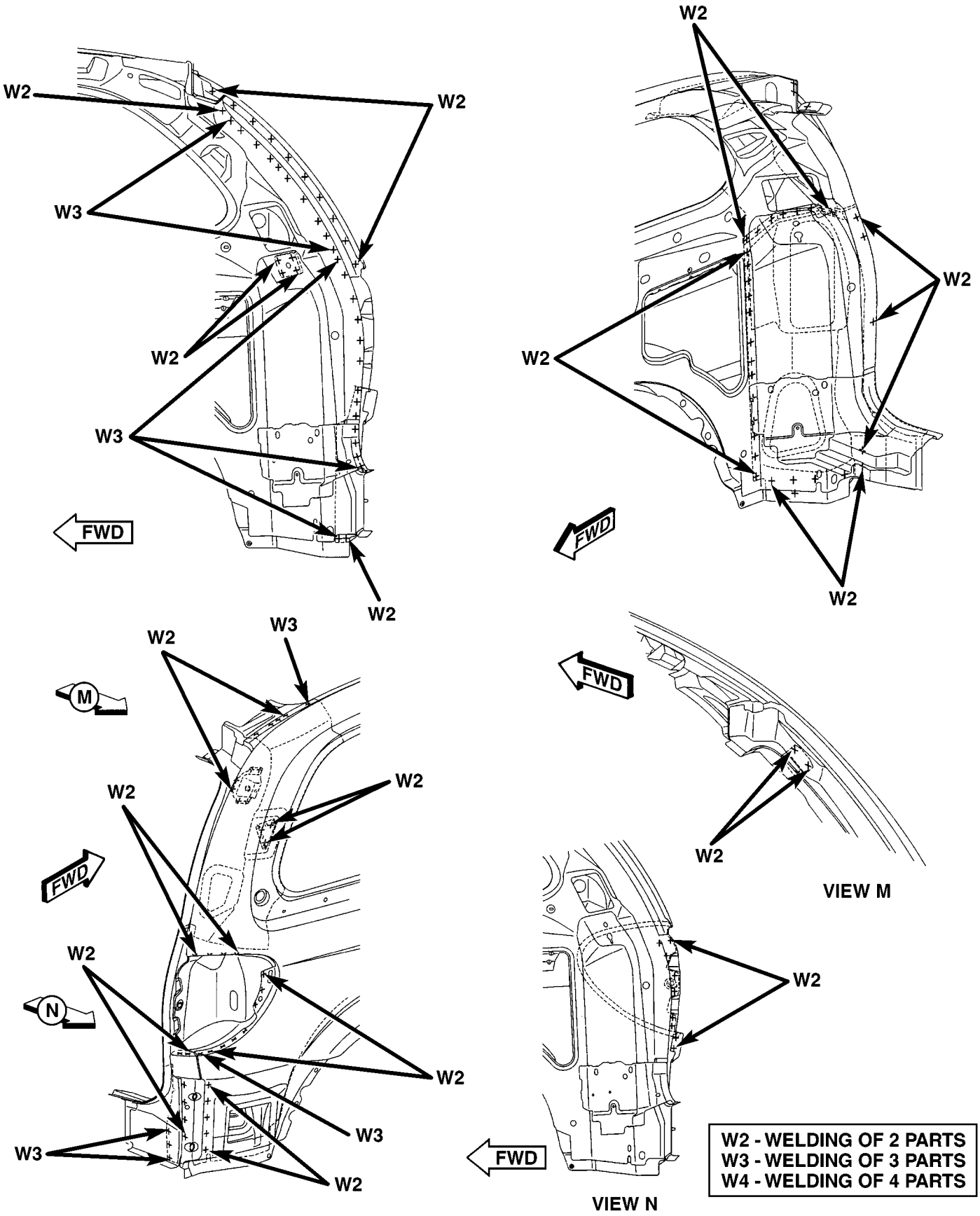

Fig. 161 D-PILLAR REINFORCEMENT - SHORT WHEEL BASE ONLY

WELD LOCATIONS (Continued)

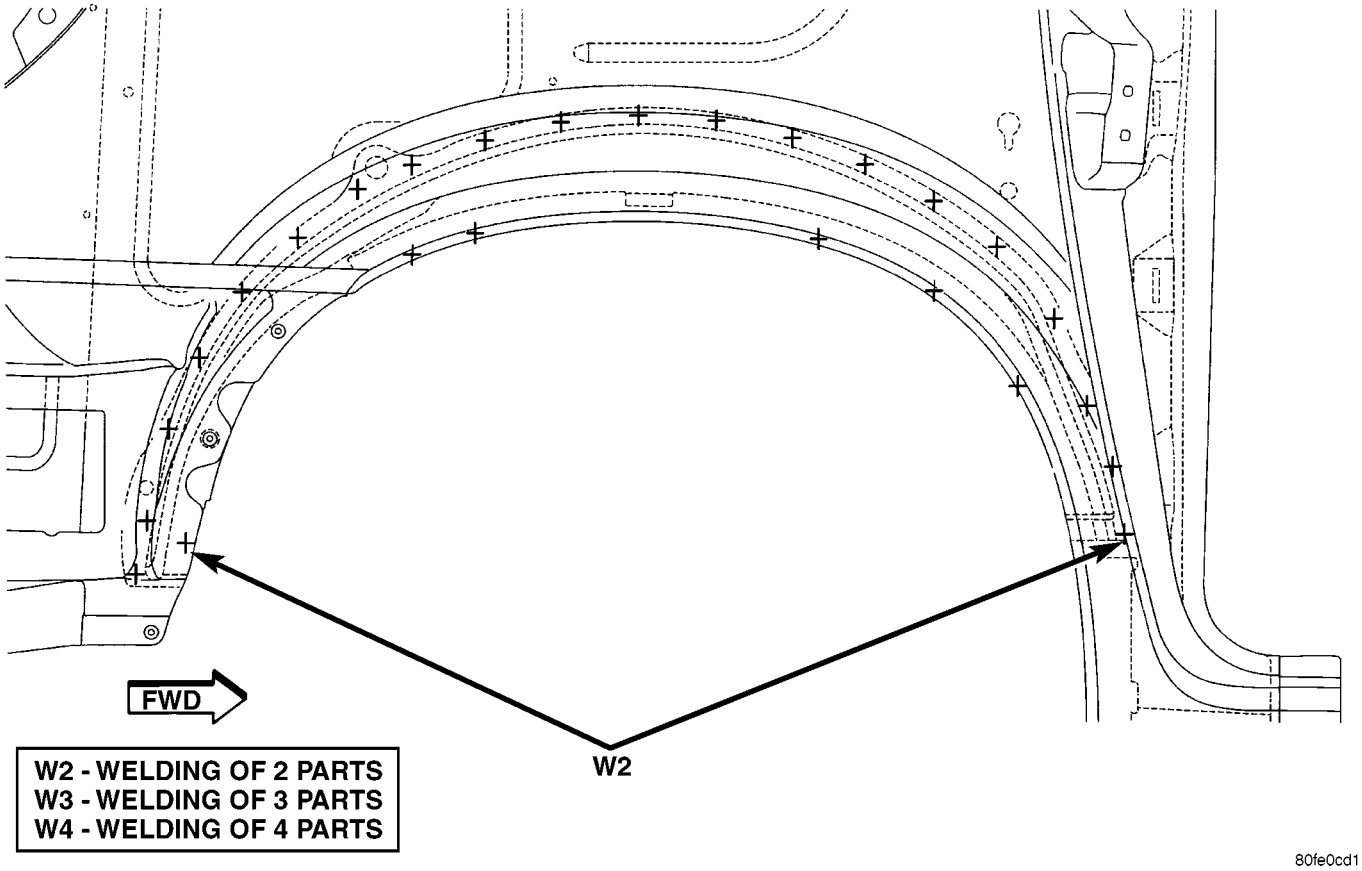

Fig. 162 OUTER WHEELHOUSE - SHORT WHEEL BASE ONLY

WELD LOCATIONS (Continued)

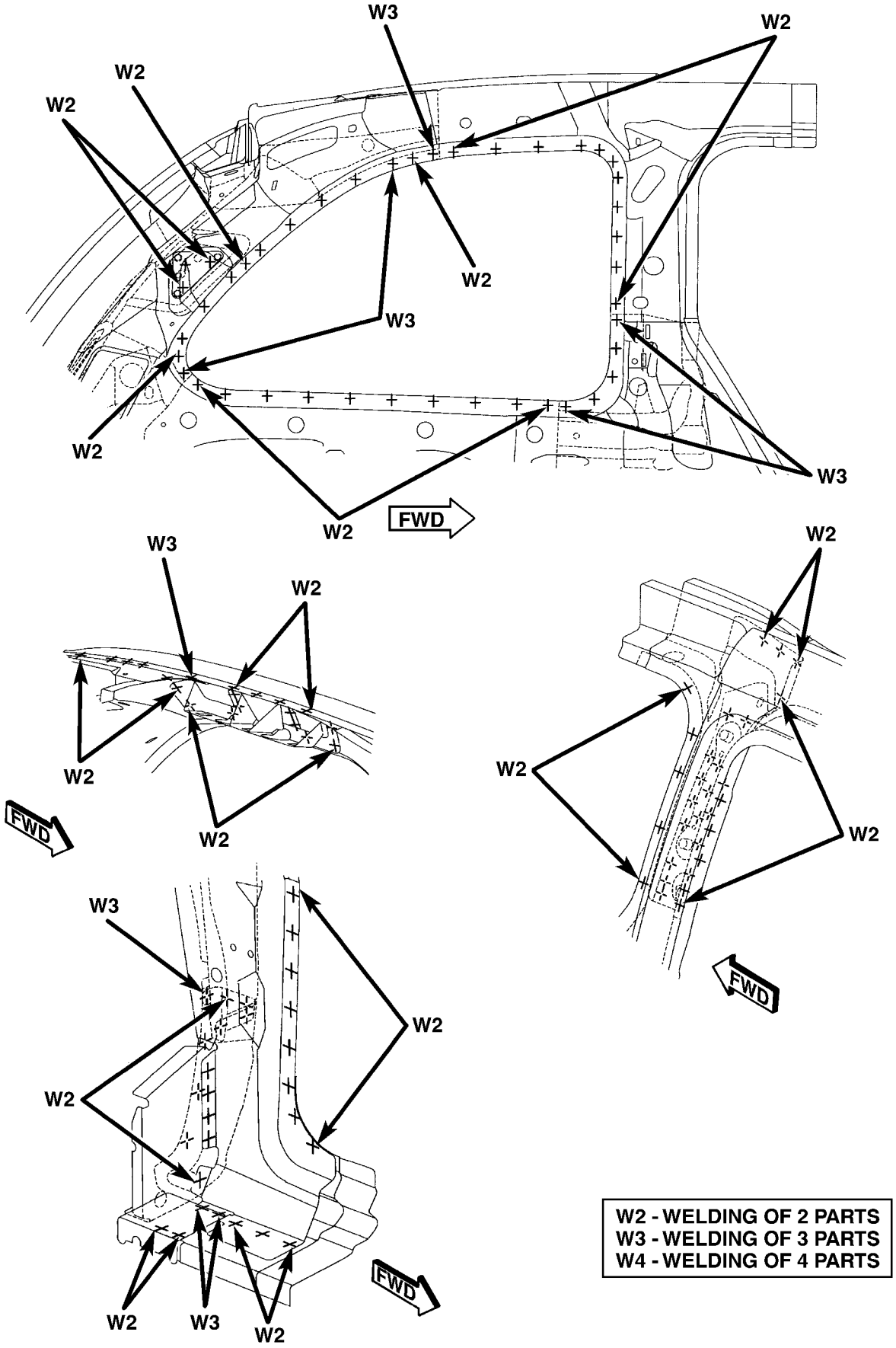

Fig. 163 LEFT REAR INNER QUARTER PANEL - SHORT WHEEL BASE ONLY

WELD LOCATIONS (Continued)

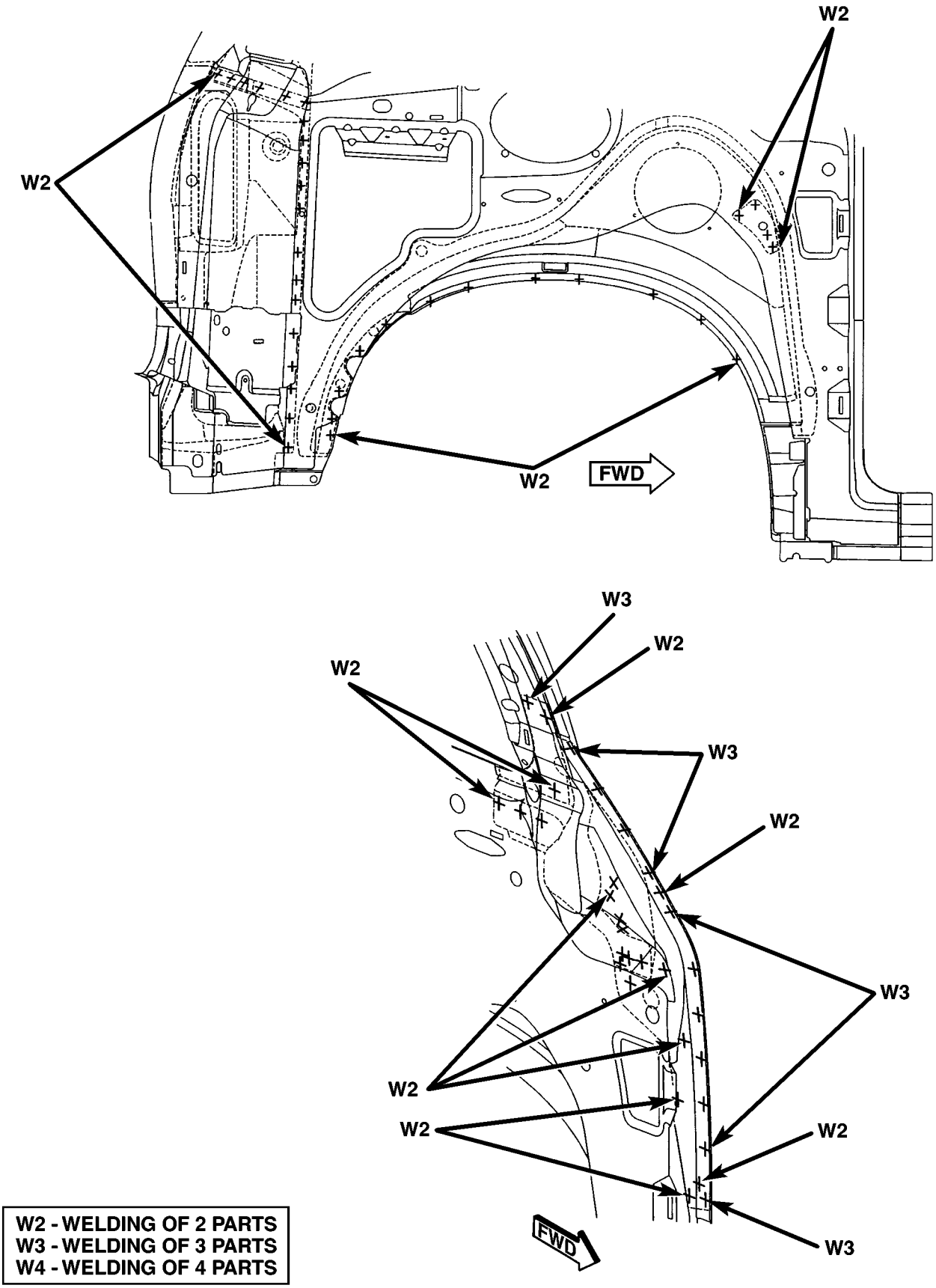

Fig. 164 LATCH REINFORCEMENT - SHORT WHEEL BASE ONLY

WELD LOCATIONS (Continued)

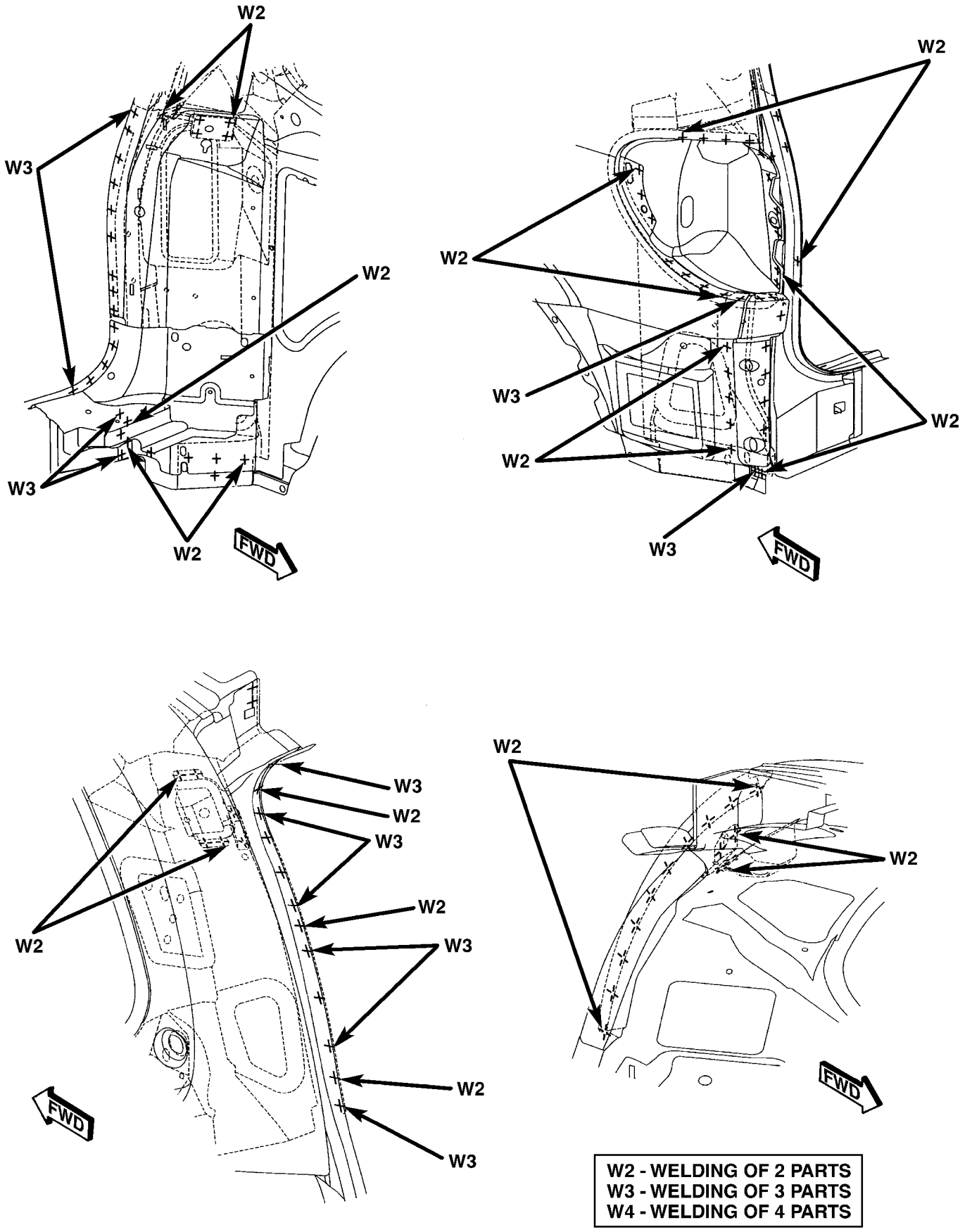

Fig. 165 D-PILLAR REINFORCEMENT - SHORT WHEEL BASE ONLY

WELD LOCATIONS (Continued)

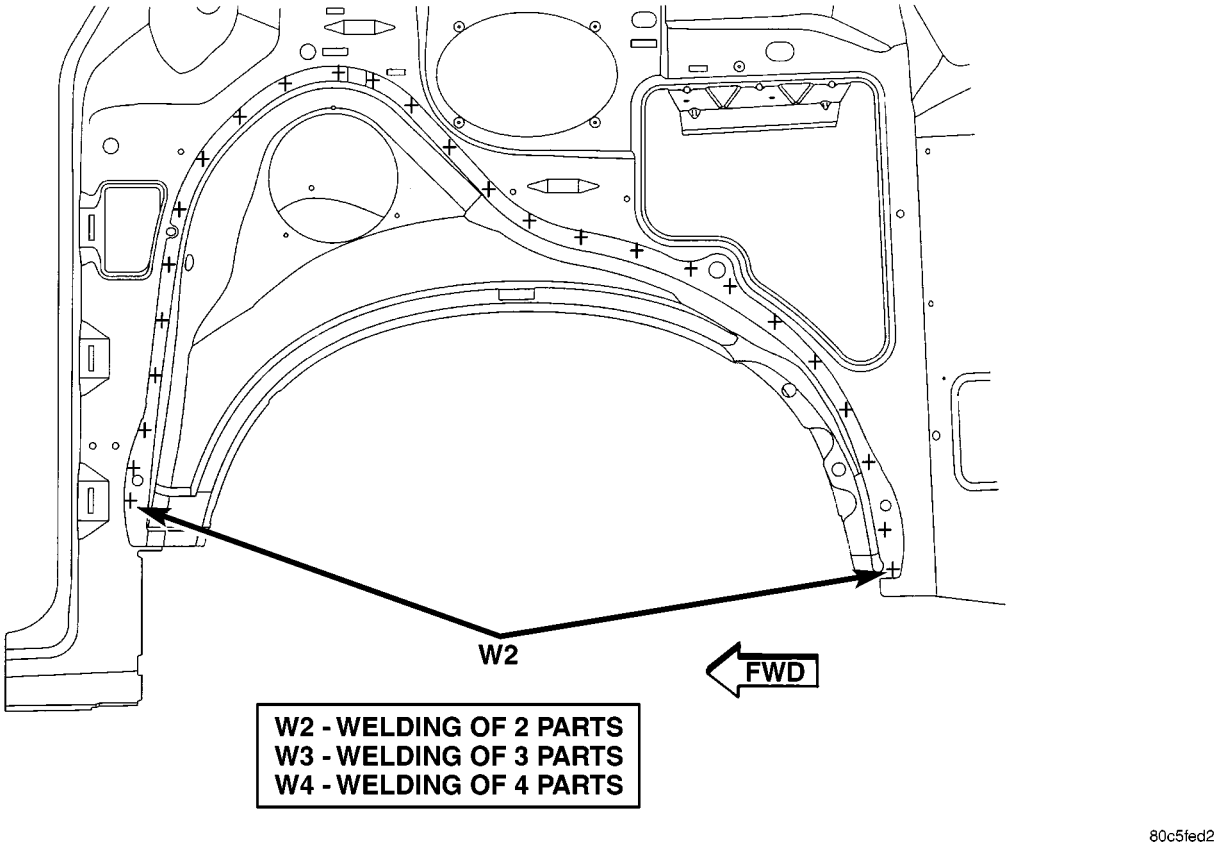

Fig. 166 OUTER WHEELHOUSE - SHORT WHEEL BASE ONLY

WELD LOCATIONS (Continued)

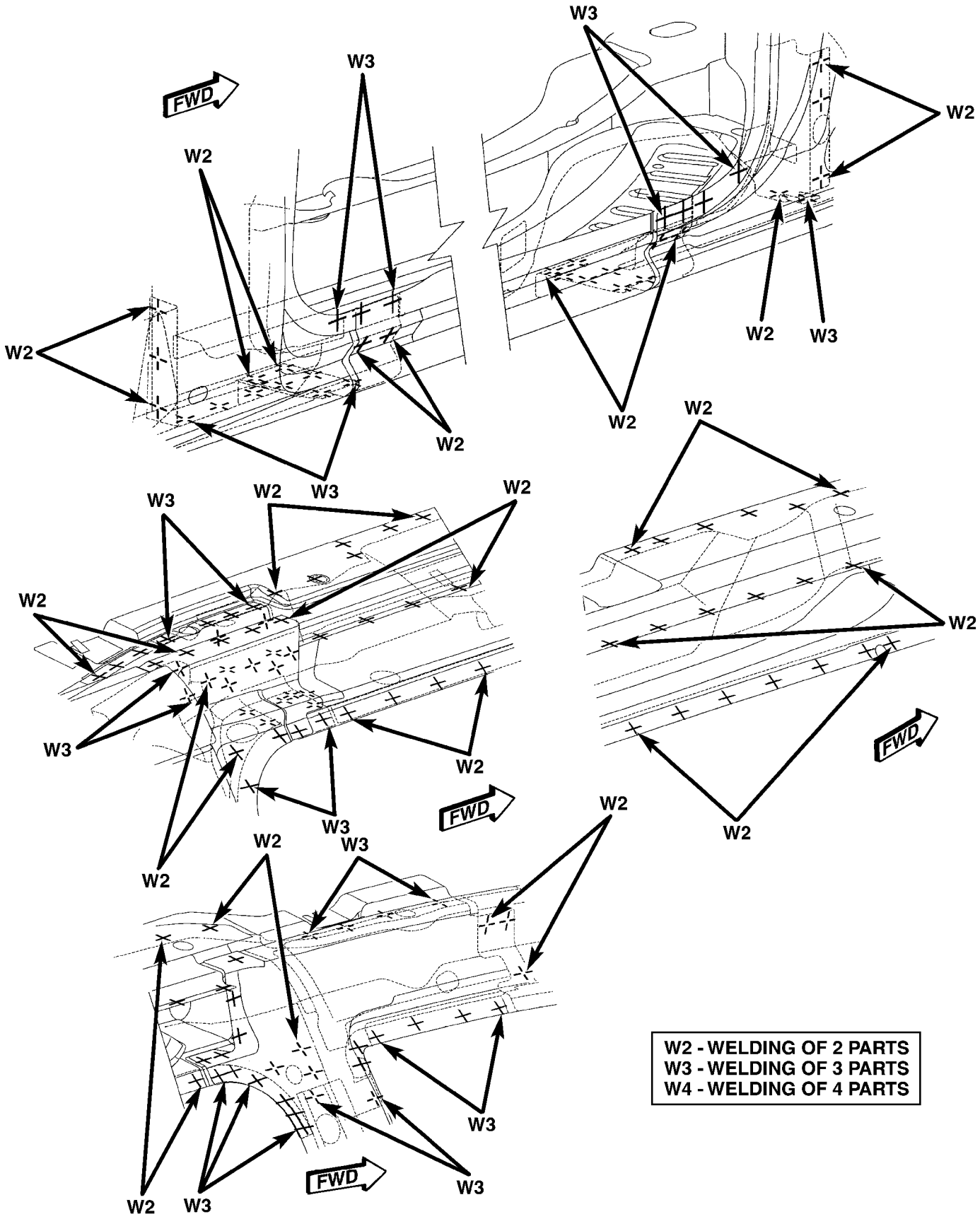
W3
W2
FWD
W2
W3
W2
W2
W3
W2
W2
W2
W3
W2
W2
W3
W2
W2
W3

WELD LOCATIONS (Continued)

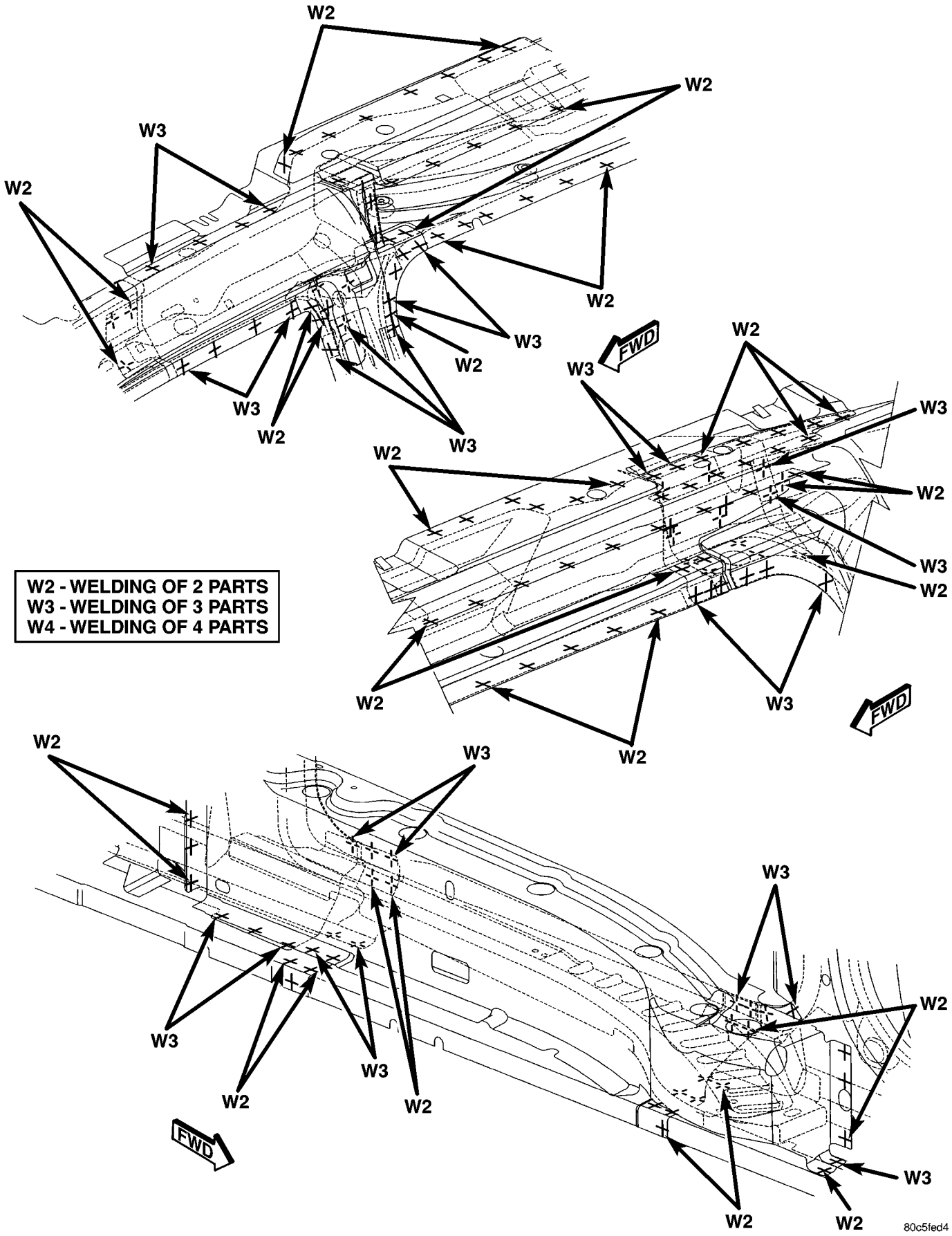

Fig. 168 BODY SIDE APERTURE LEFT SIDE - LONG WHEEL BASE ONLY

WELD LOCATIONS (Continued)

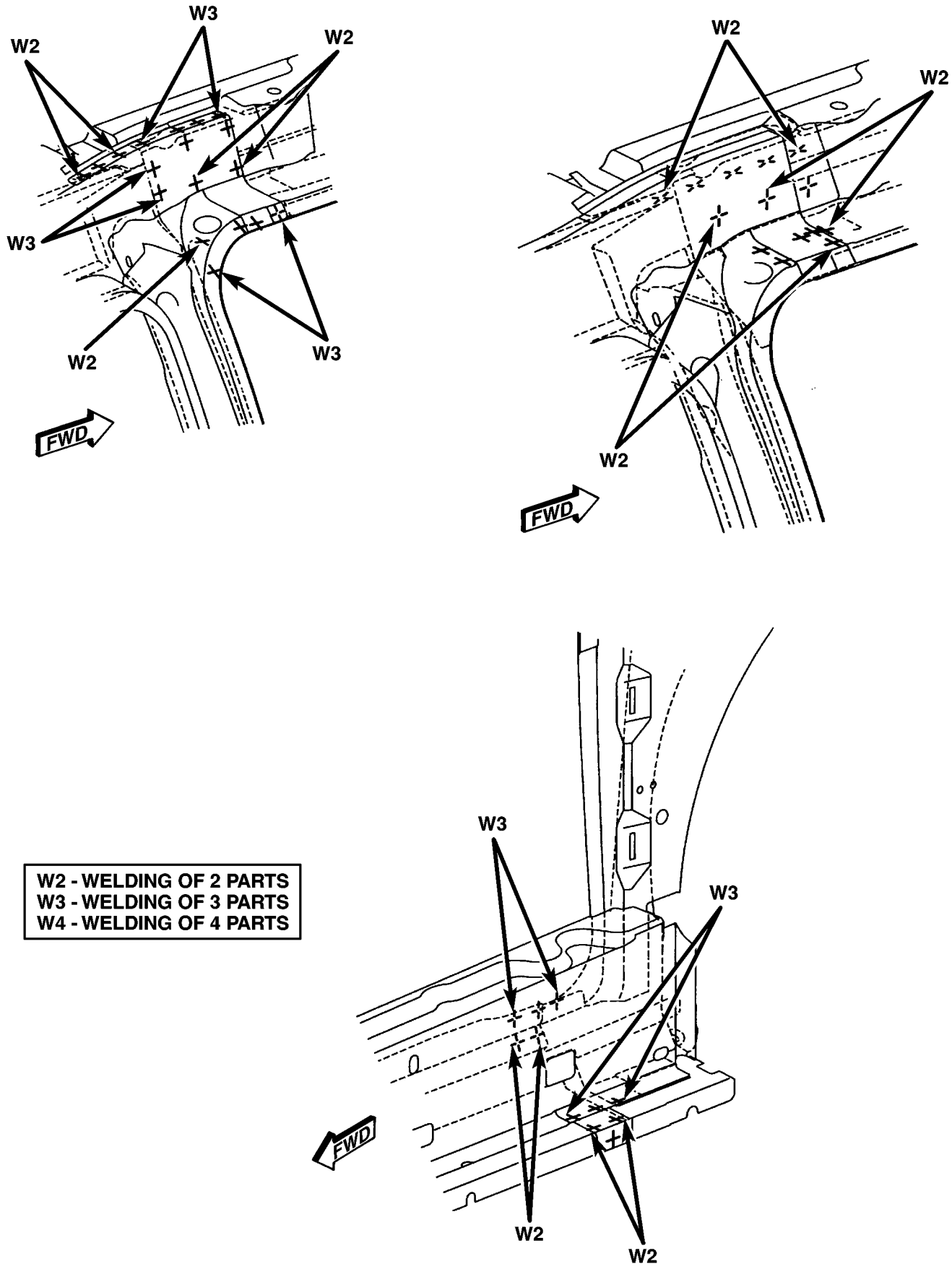

Fig. 169 BODY SIDE APERTURE RIGHT SIDE - SHORT WHEEL BASE ONLY

80c5fed5

WELD LOCATIONS (Continued)

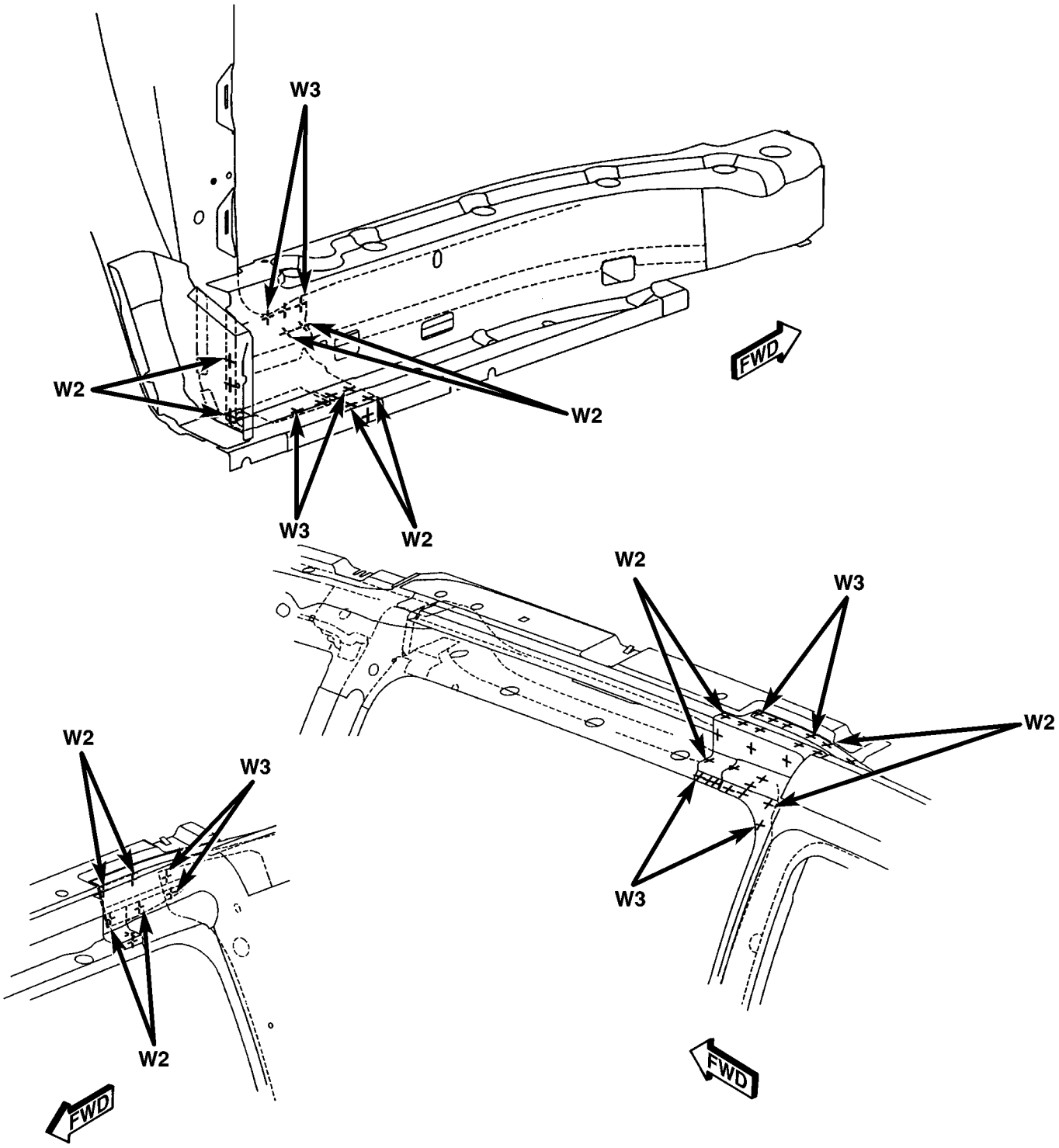

W2 - WELDING OF 2 PARTS
W3 - WELDING OF 3 PARTS
W4 - WELDING OF 4 PARTS

80c5fed6

Fig. 170 BODY SIDE APERTURE LEFT SIDE - SHORT WHEEL BASE ONLY

WELD LOCATIONS (Continued)

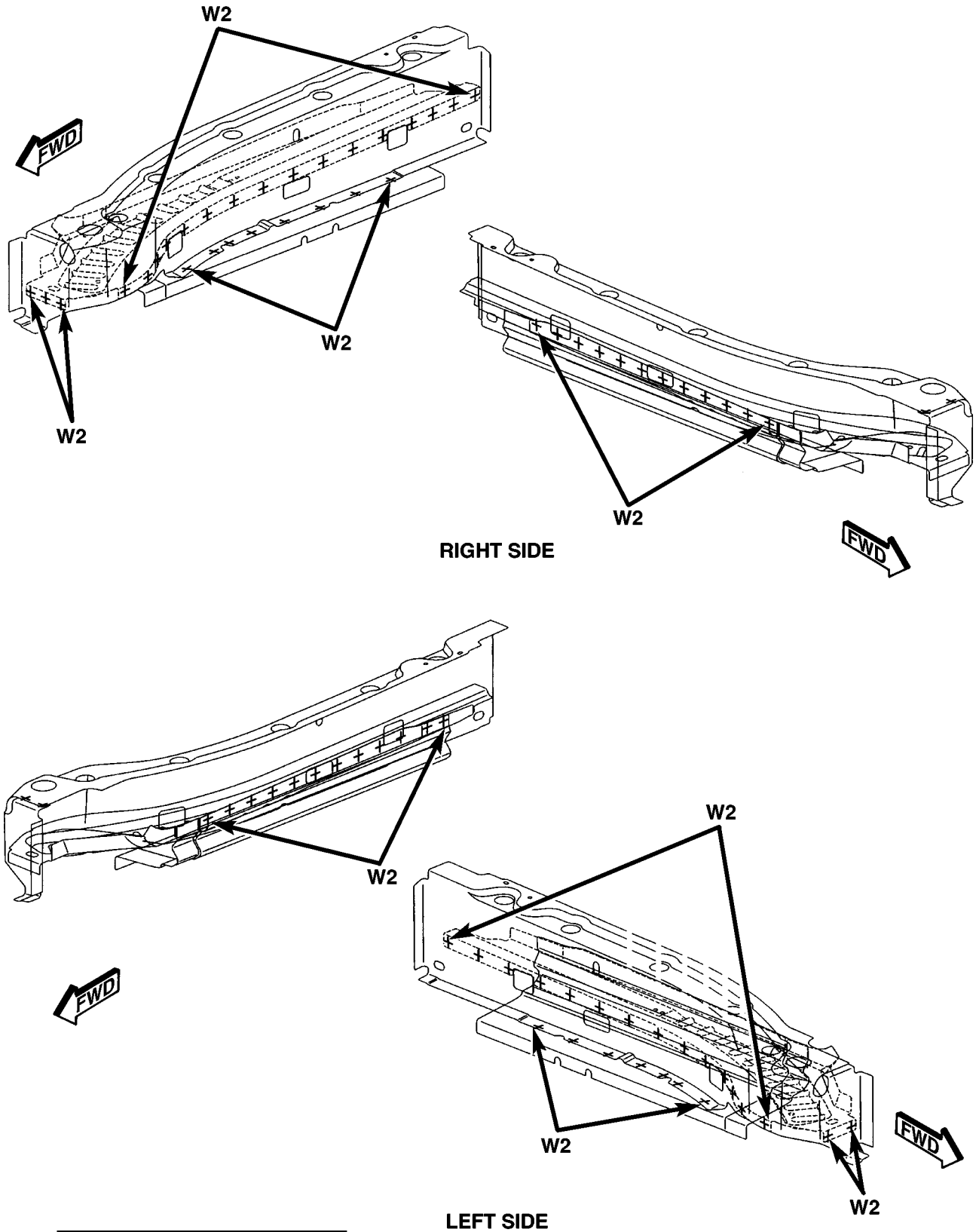

80c5fed7

Fig. 171 LOWER SLIDING DOOR TRACK

WELD LOCATIONS (Continued)

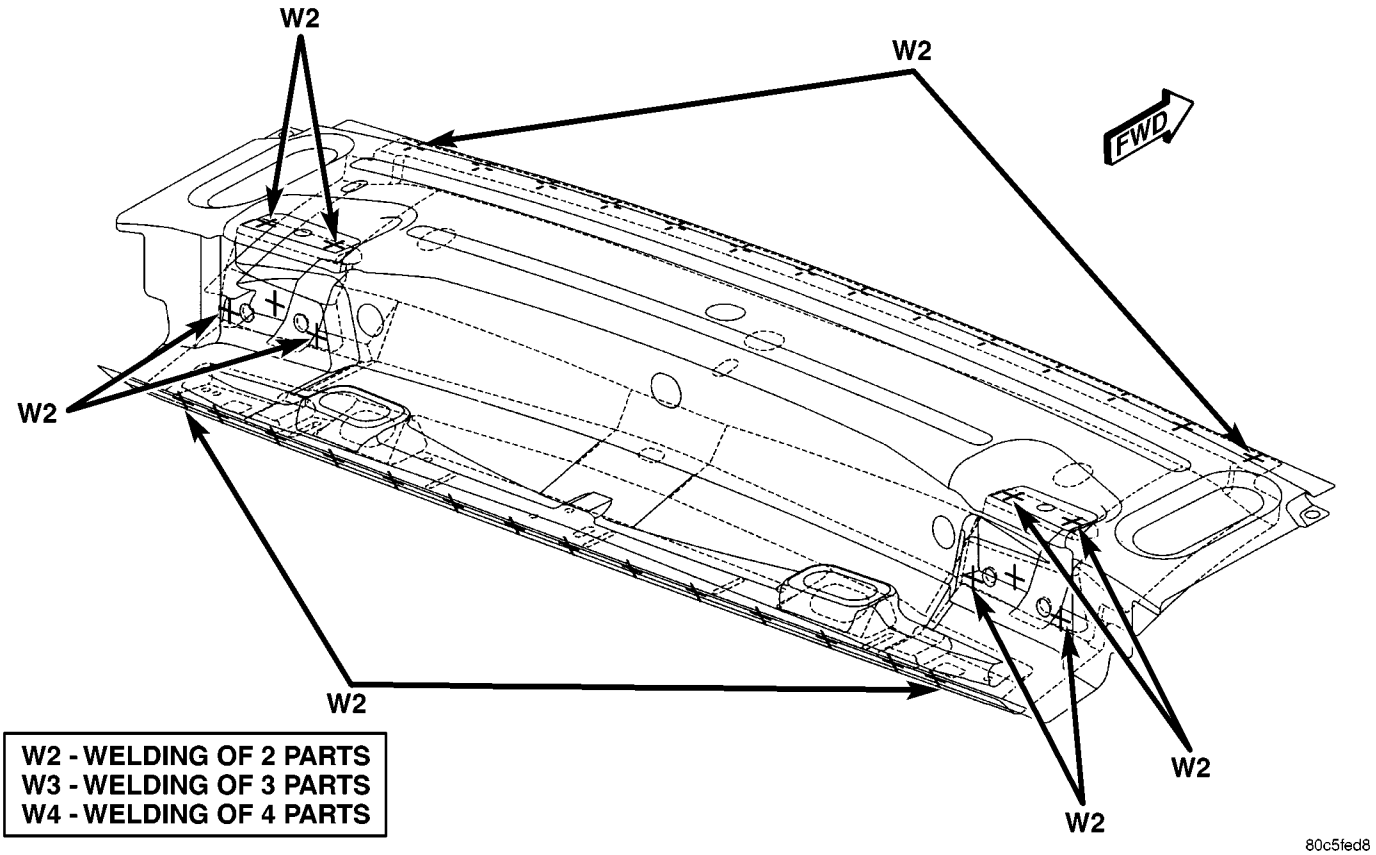

Fig. 172 LIFTGATE UPPER FRAME

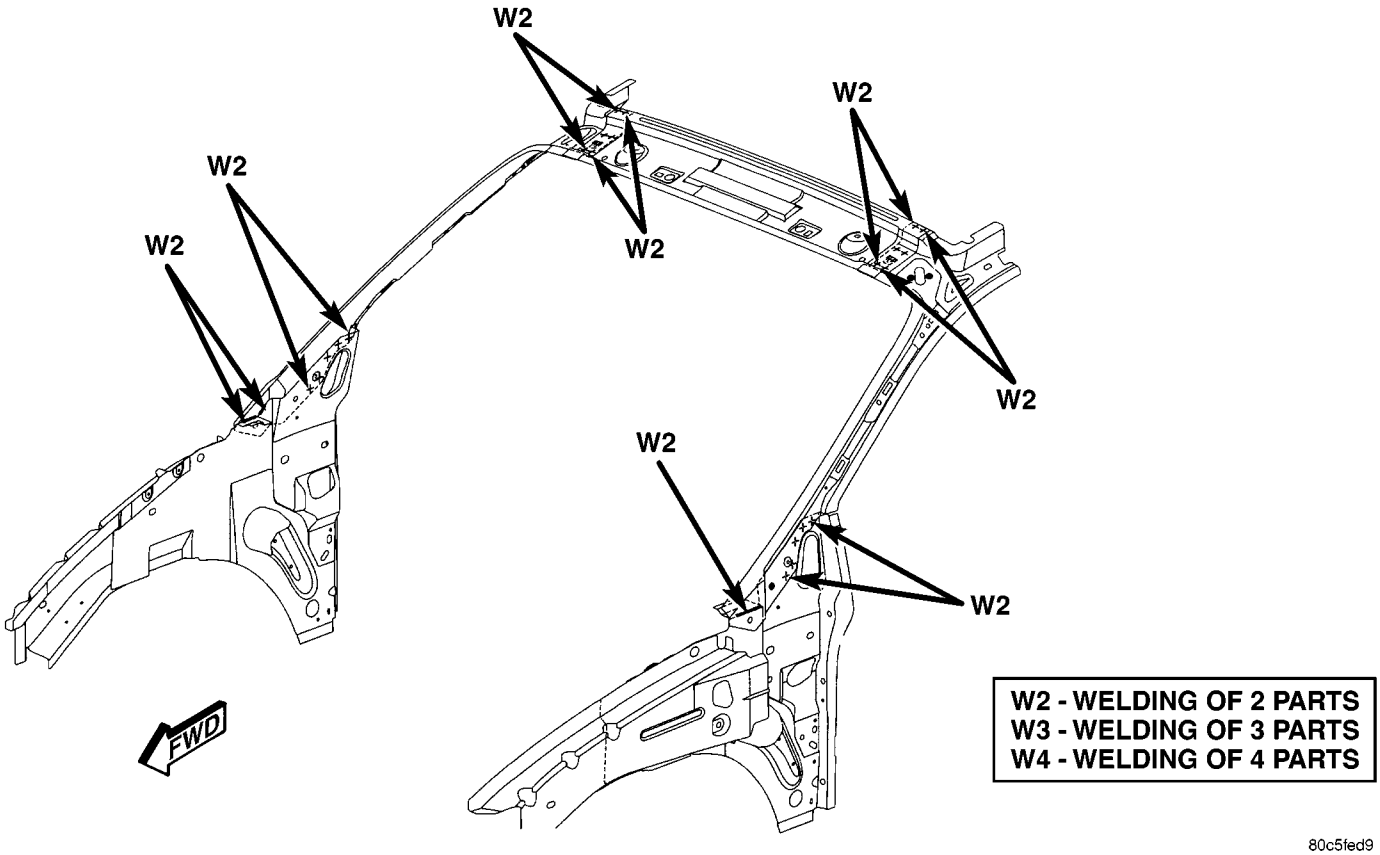

Fig. 173 UPPER WINDSHIELD FRAME

WELD LOCATIONS (Continued)

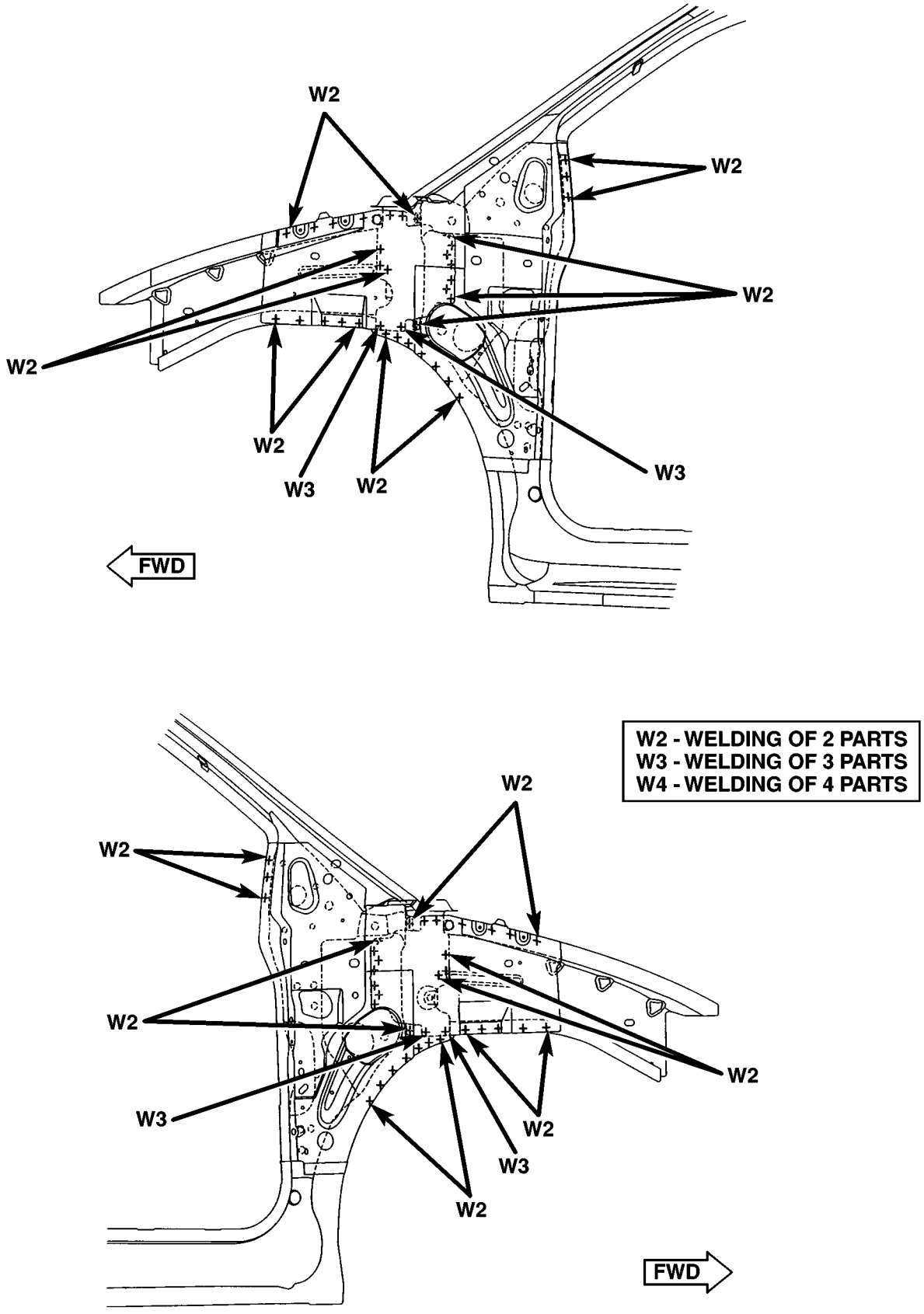

Fig. 174 FRONT FENDER SHIELD BEAM

WELD LOCATIONS (Continued)

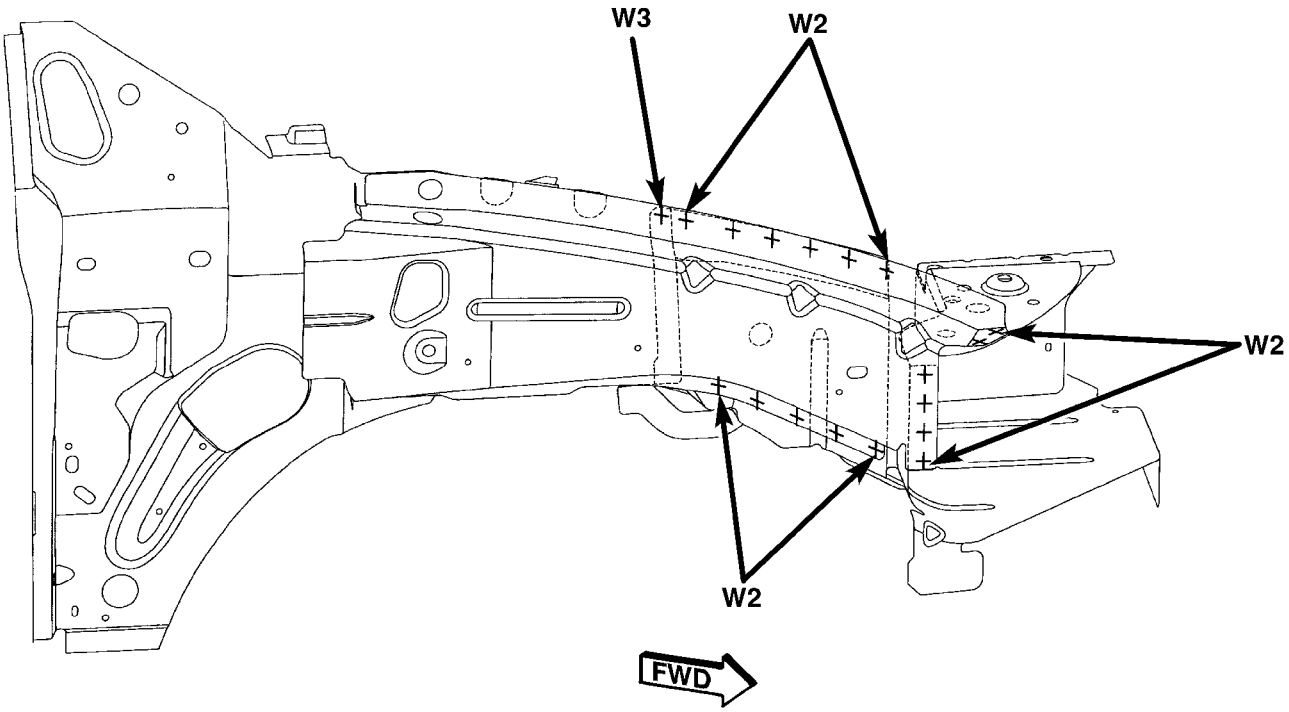

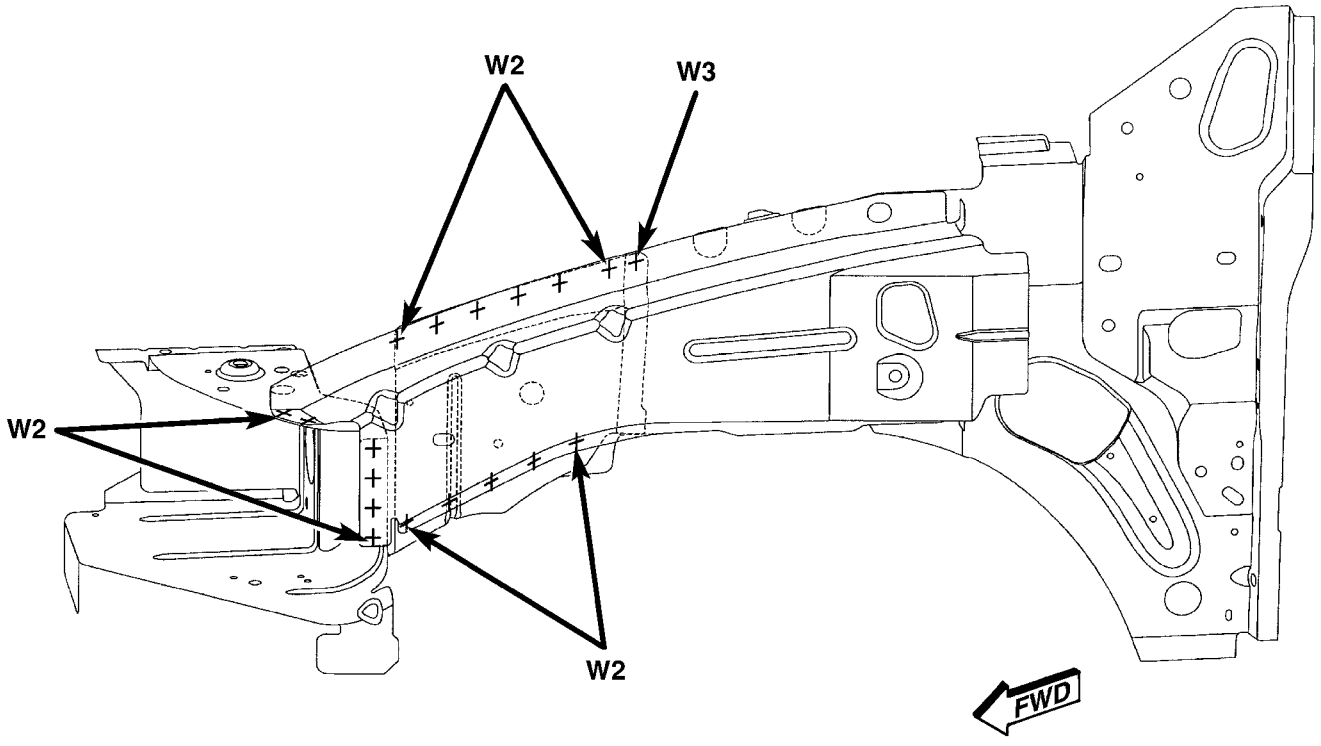

W2 - WELDING OF 2 PARTS
W3 - WELDING OF 3 PARTS
W4 - WELDING OF 4 PARTS

80a8cd69

Fig. 175 FRONT FENDER SHIELD BEAM/COWL SIDE PANEL

WELD LOCATIONS (Continued)

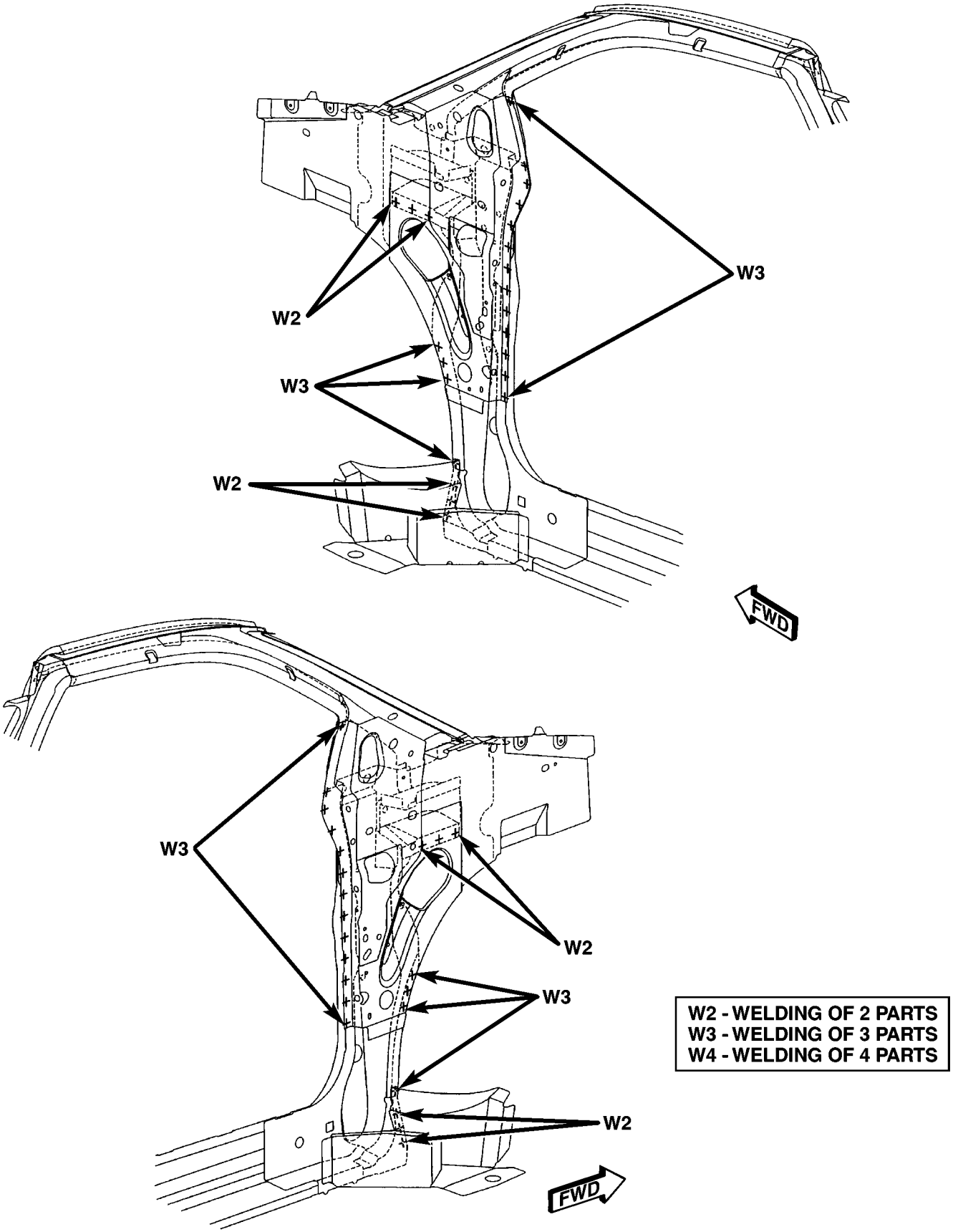

Fig. 176 HINGE PILLAR REINFORCEMENT

WELD LOCATIONS (Continued)

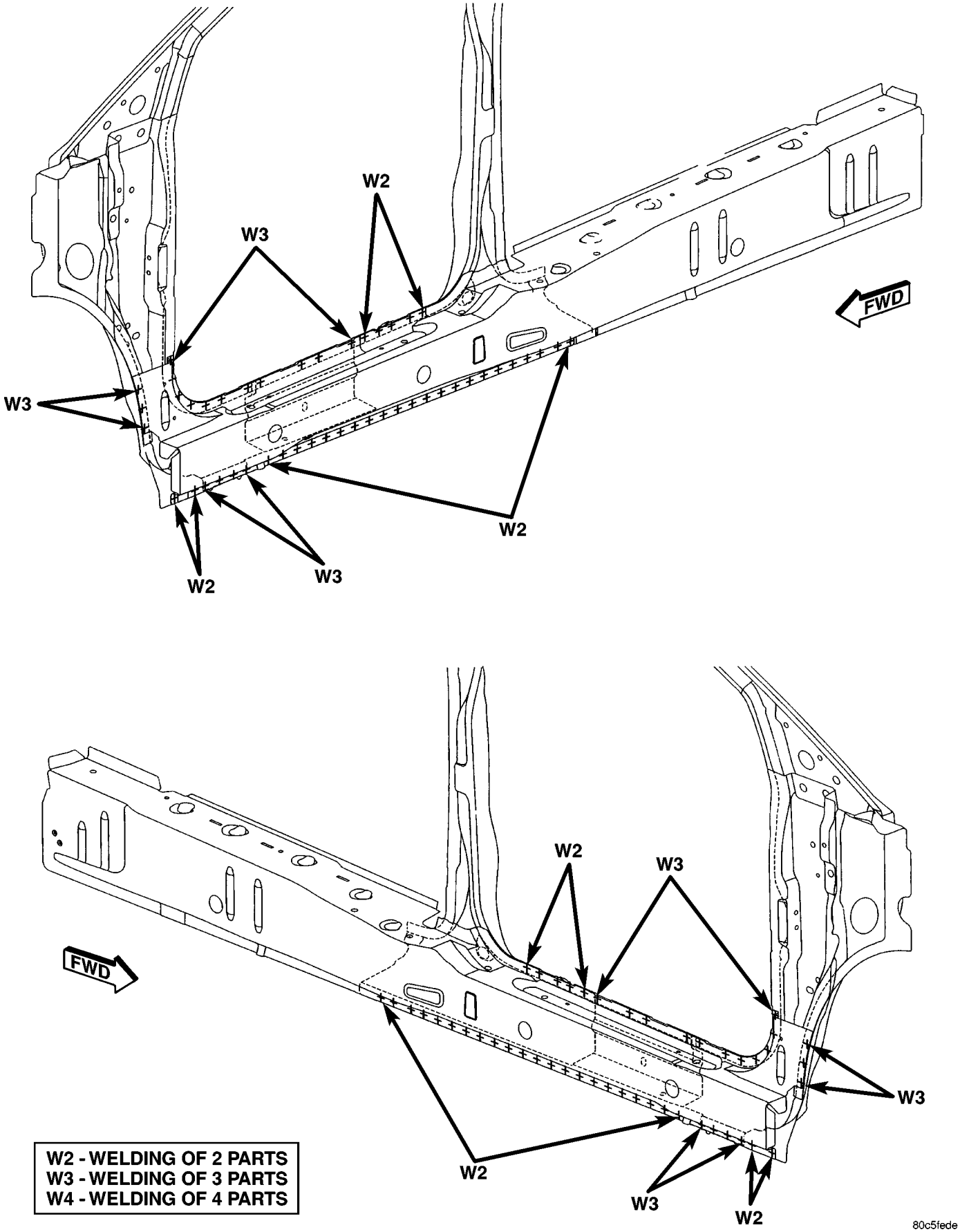

Fig. 177 INNER SIDE SILL - LONG WHEEL BASE ONLY

WELD LOCATIONS (Continued)

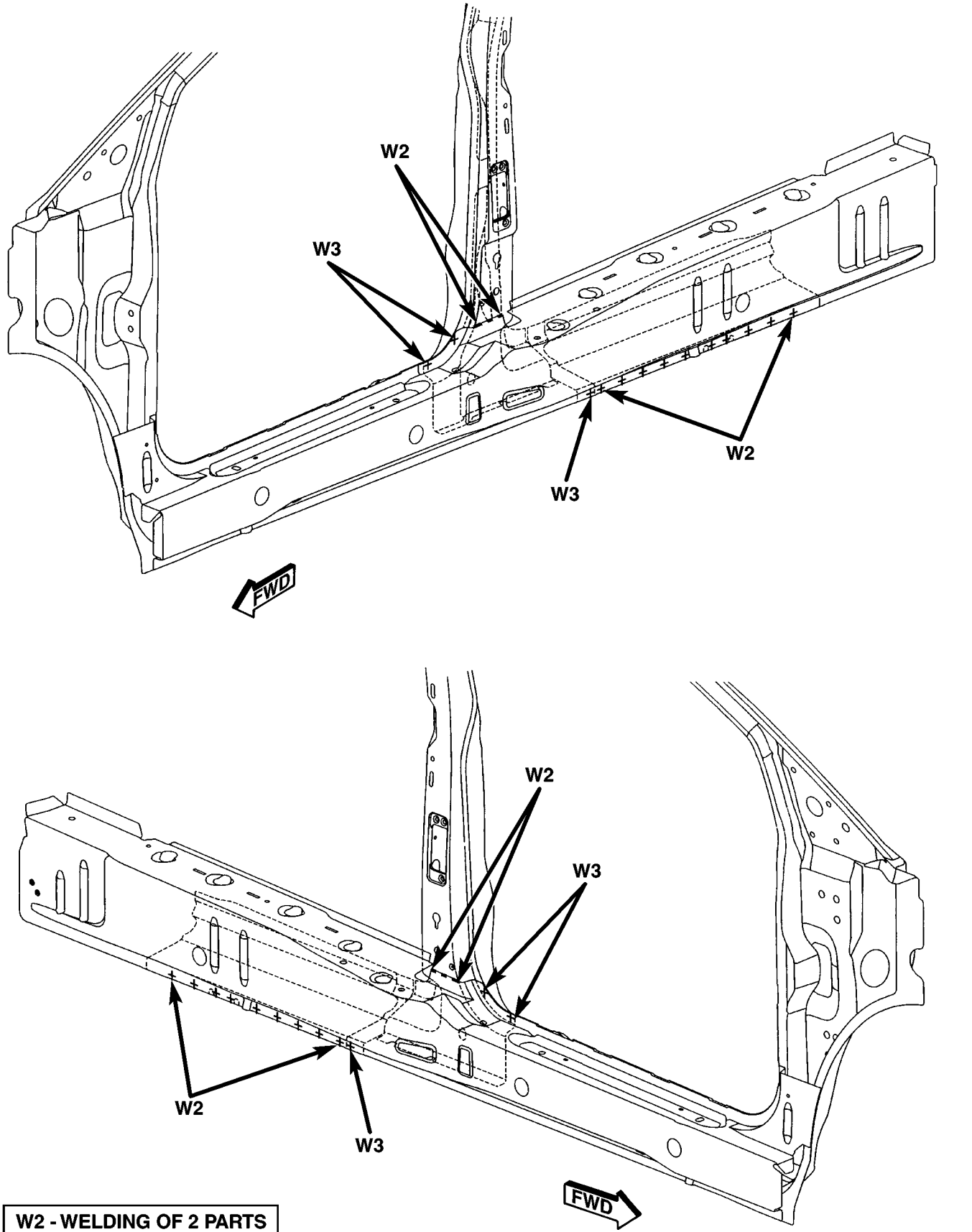

Fig. 178 INNER SIDE SILL/OUTER SIDE SILL - LONG WHEEL BASE ONLY

WELD LOCATIONS (Continued)

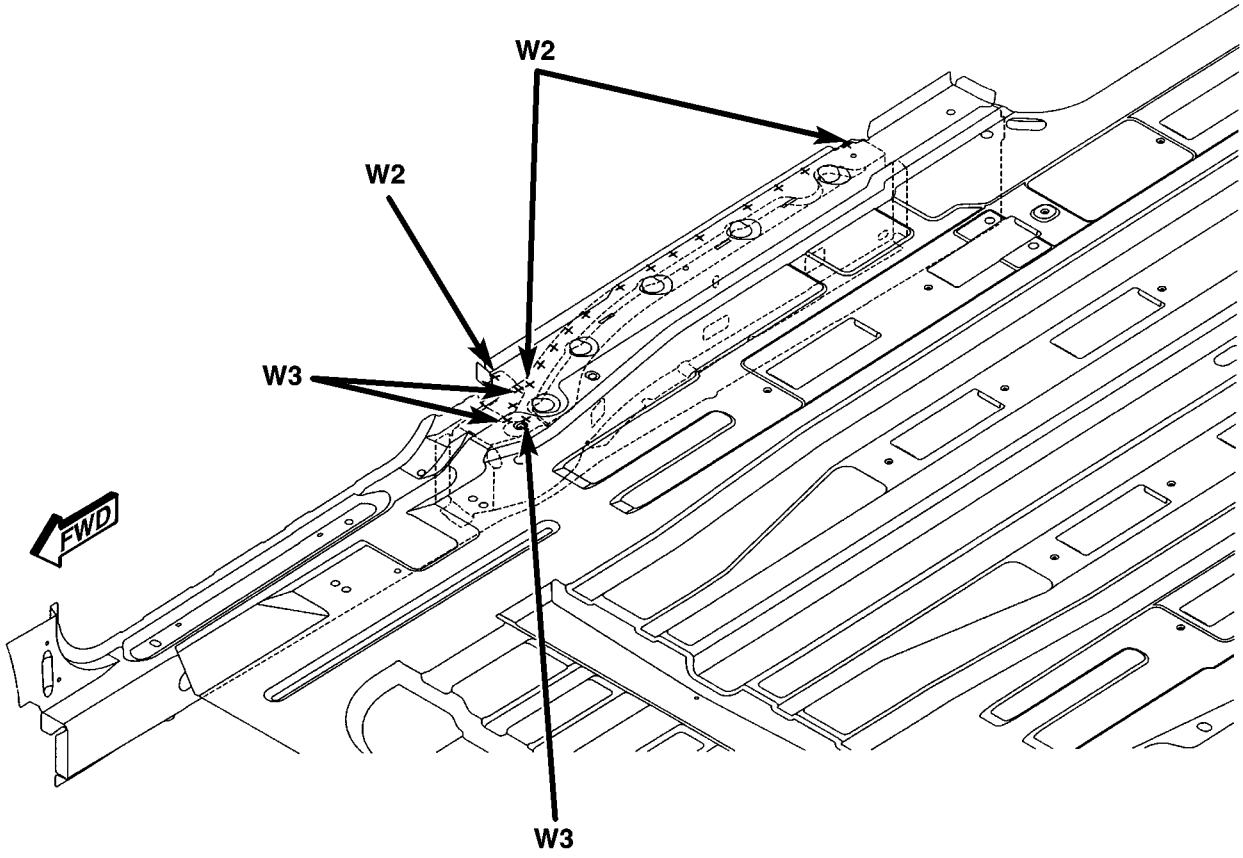

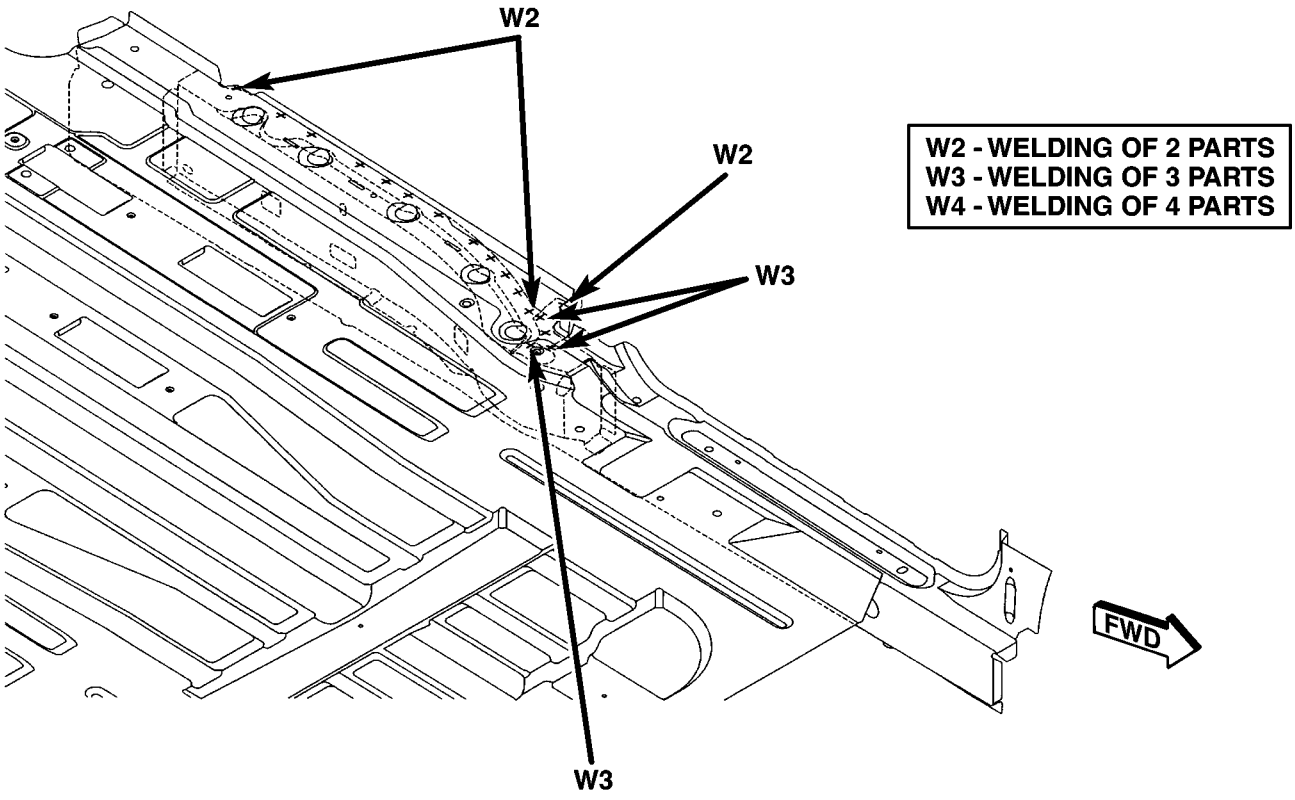

80c5fee0

Fig. 179 LOWER SLIDING DOOR TRACK REINFORCEMENT - LONG WHEEL BASE ONLY

WELD LOCATIONS (Continued)

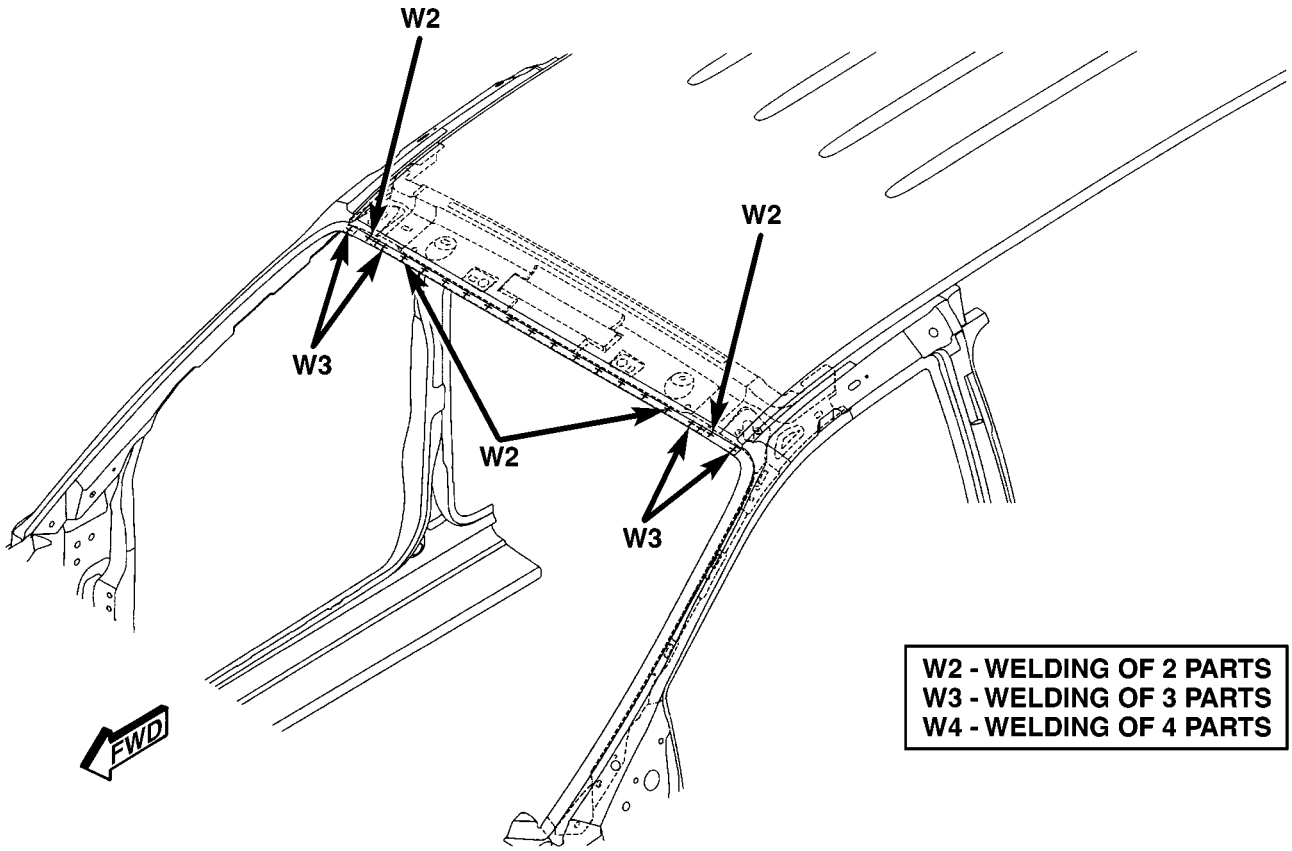

Fig. 180 UPPER WINDSHIELD FRAME/ROOF PANEL - LONG WHEEL BASE ONLY

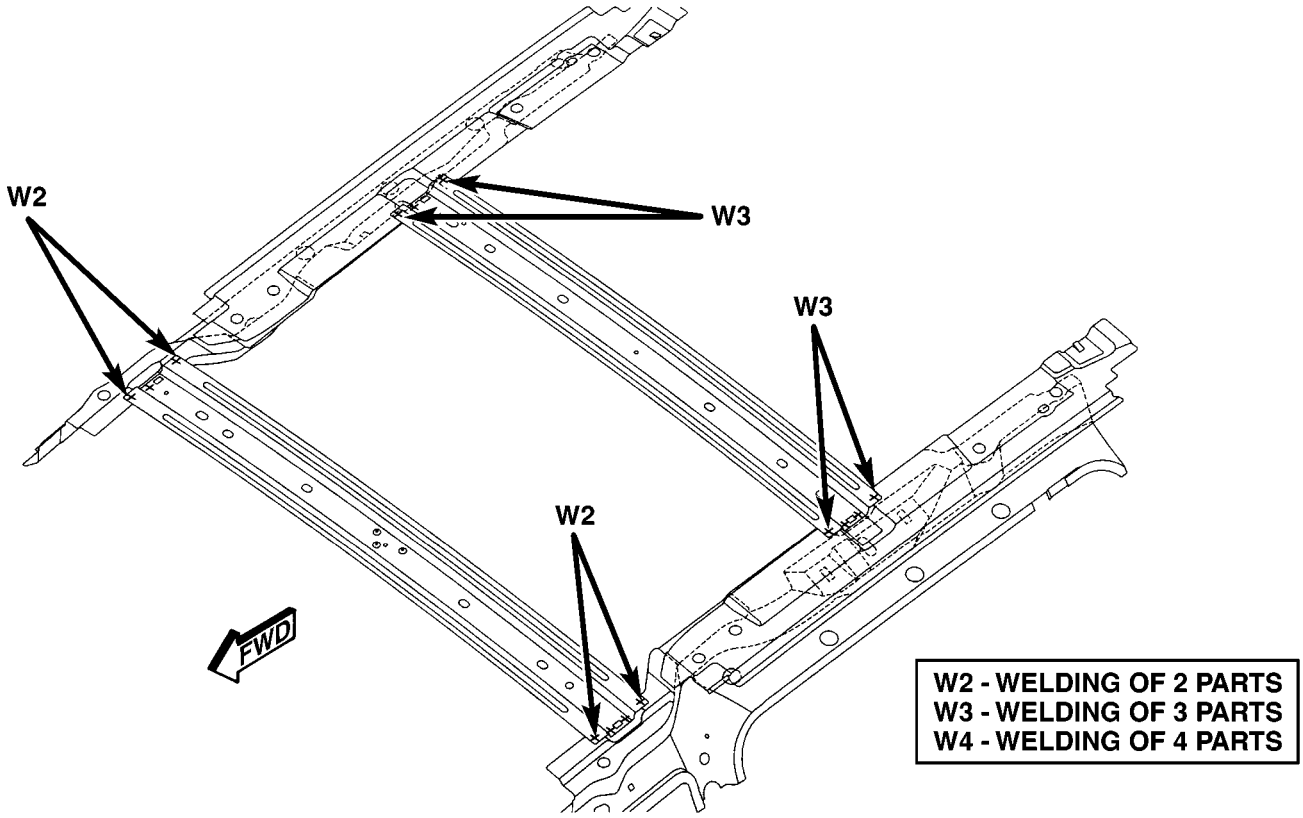

Fig. 181 ROOF BOWS/INNER ROOF SIDE RAILS

WELD LOCATIONS (Continued)

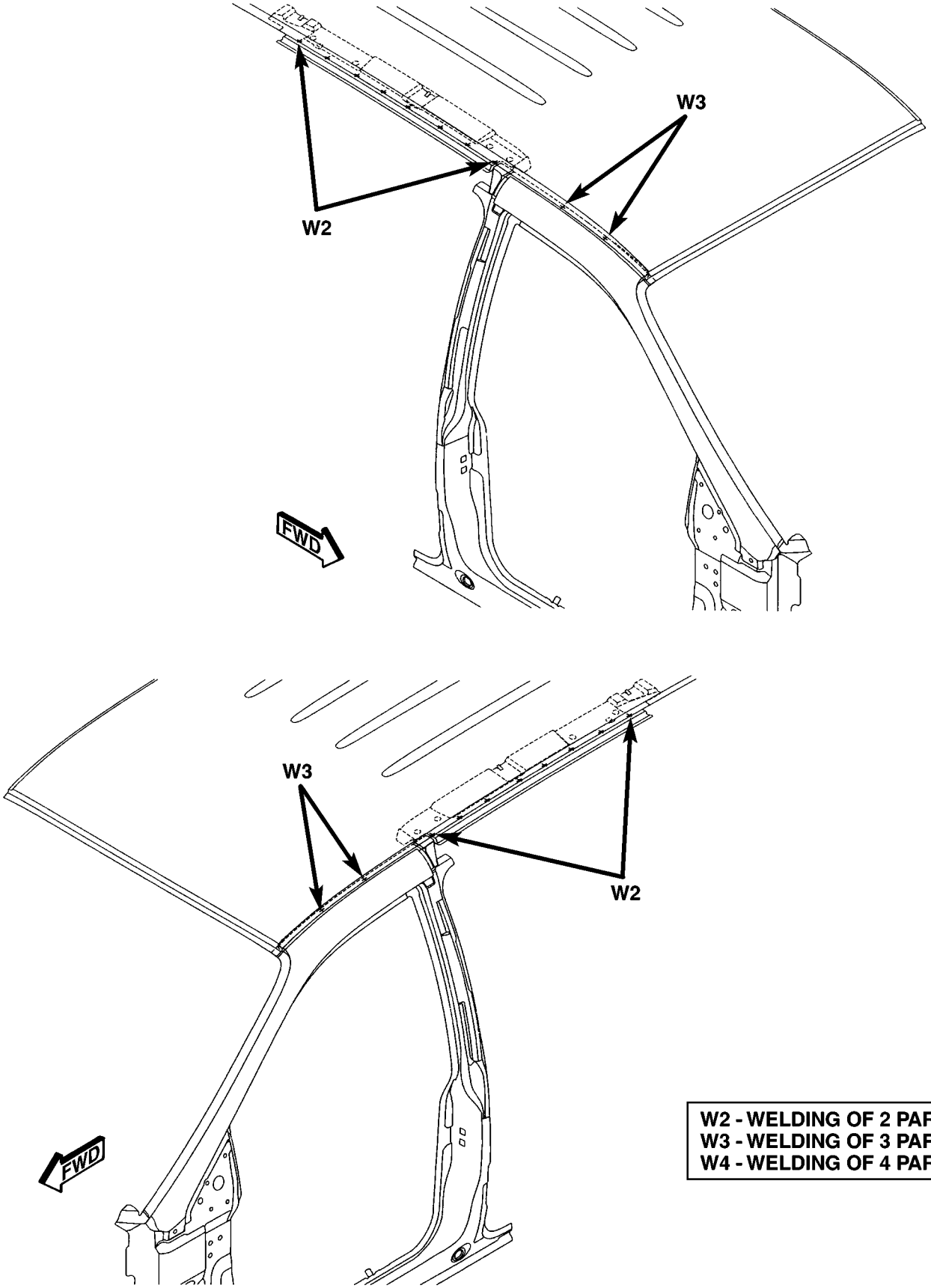

Fig. 182 OUTER ROOF PANEL - LONG WHEEL BASE ONLY

WELD LOCATIONS (Continued)

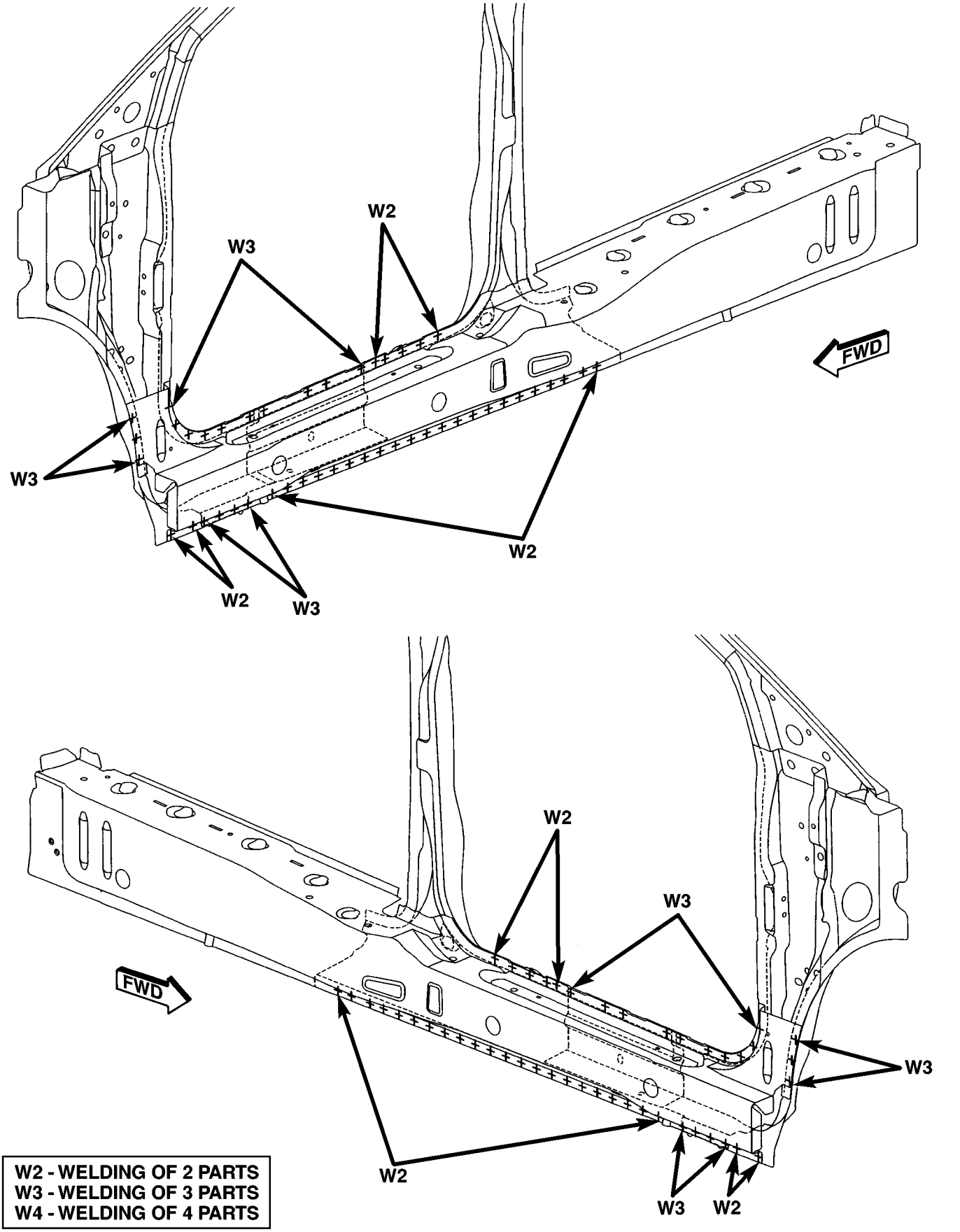

Fig. 183 INNER SIDE SILL - SHORT WHEEL BASE ONLY

WELD LOCATIONS (Continued)

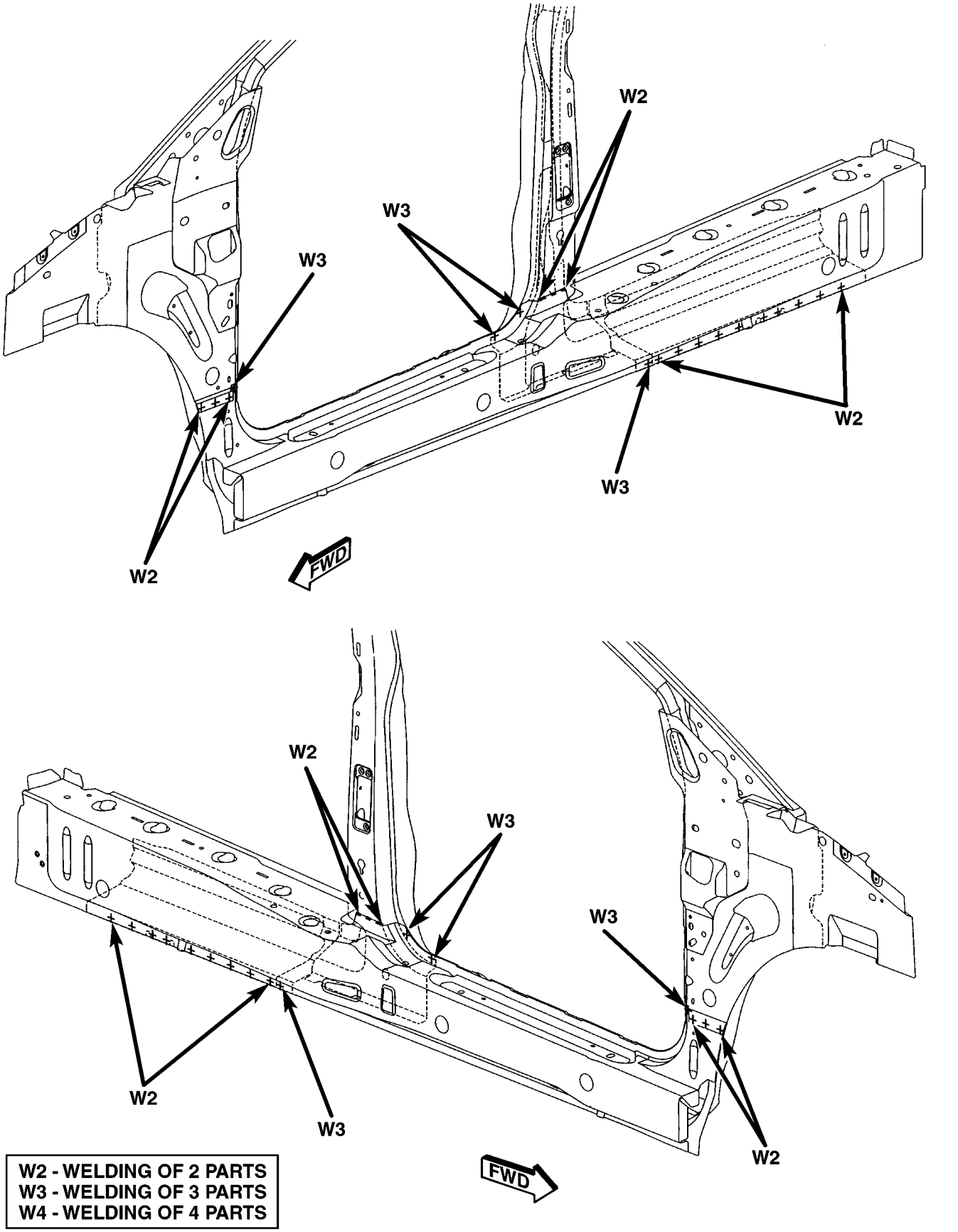

Fig. 184 INNER/OUTER SIDE SILLS - SHORT WHEEL BASE ONLY

WELD LOCATIONS (Continued)

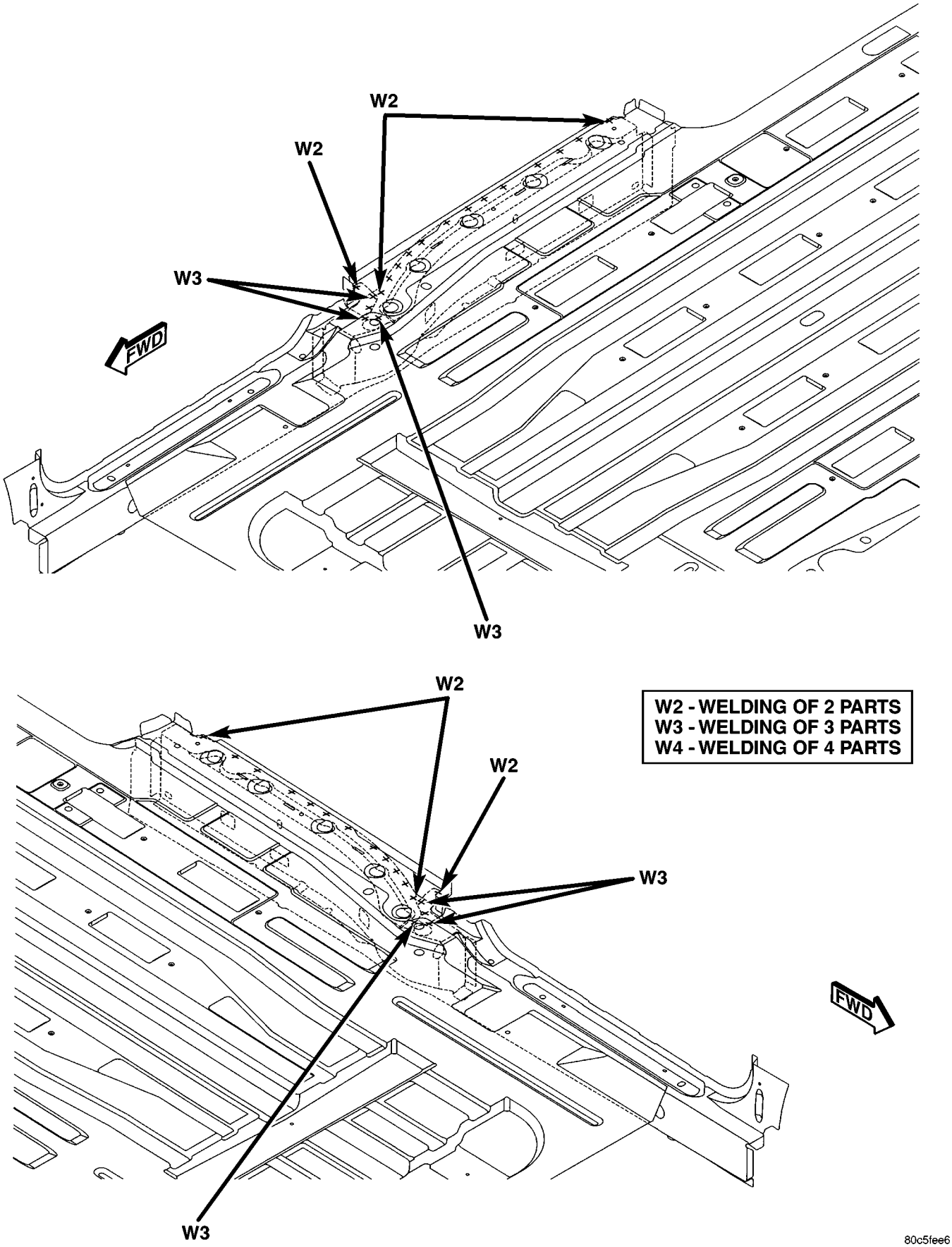

Fig. 185 LOWER SLIDING DOOR TRACK - SHORT WHEEL BASE ONLY

WELD LOCATIONS (Continued)

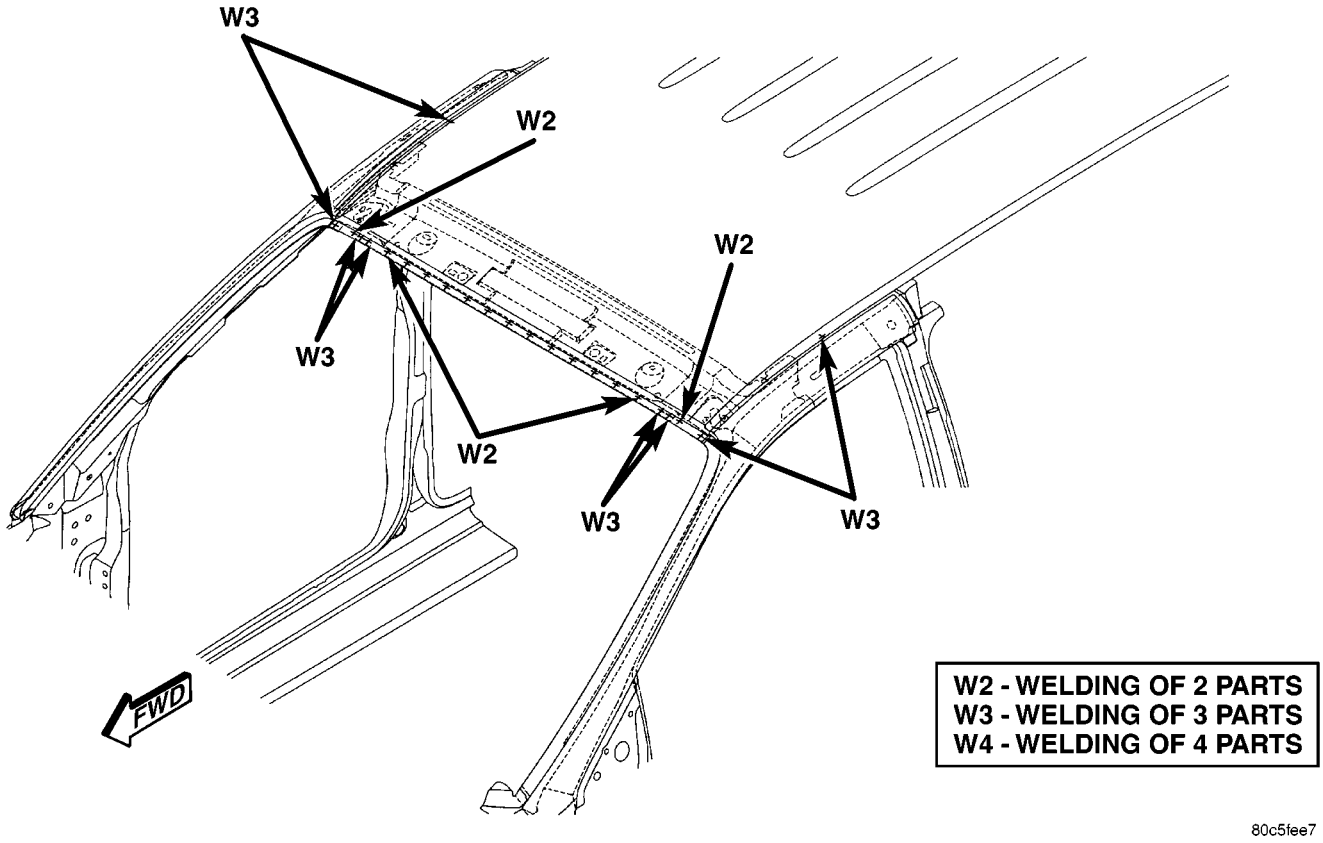

Fig. 186 UPPER WINDSHIELD FRAME/OUTER ROOF PANEL - SHORT WHEEL BASE ONLY

WELD LOCATIONS (Continued)

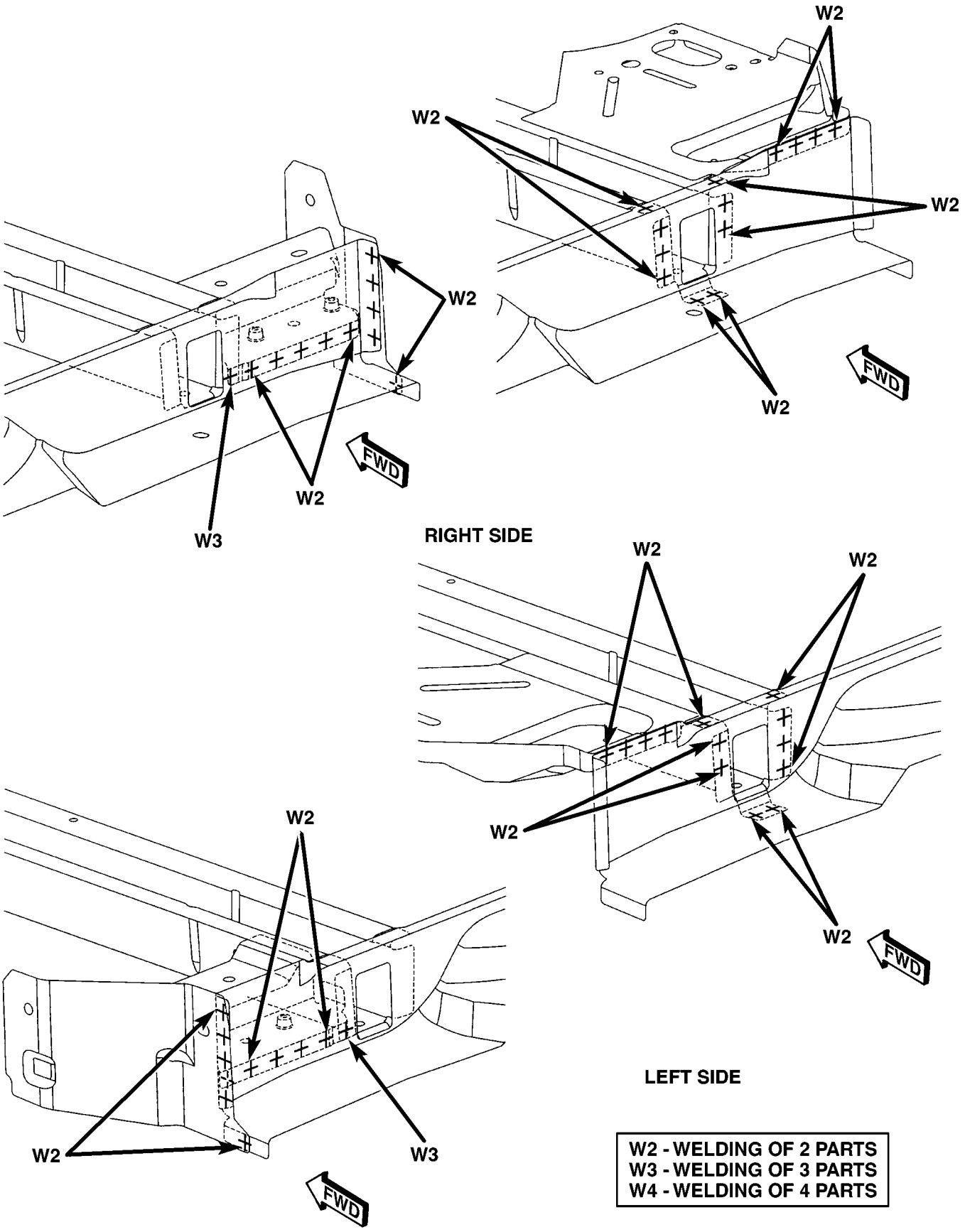

80c5fee8

Fig. 187 REAR SUSPENSION HANGERS - LONG WHEEL BASE SHOWN, SHORT WHEEL BASE TYPICAL

WELD LOCATIONS (Continued)

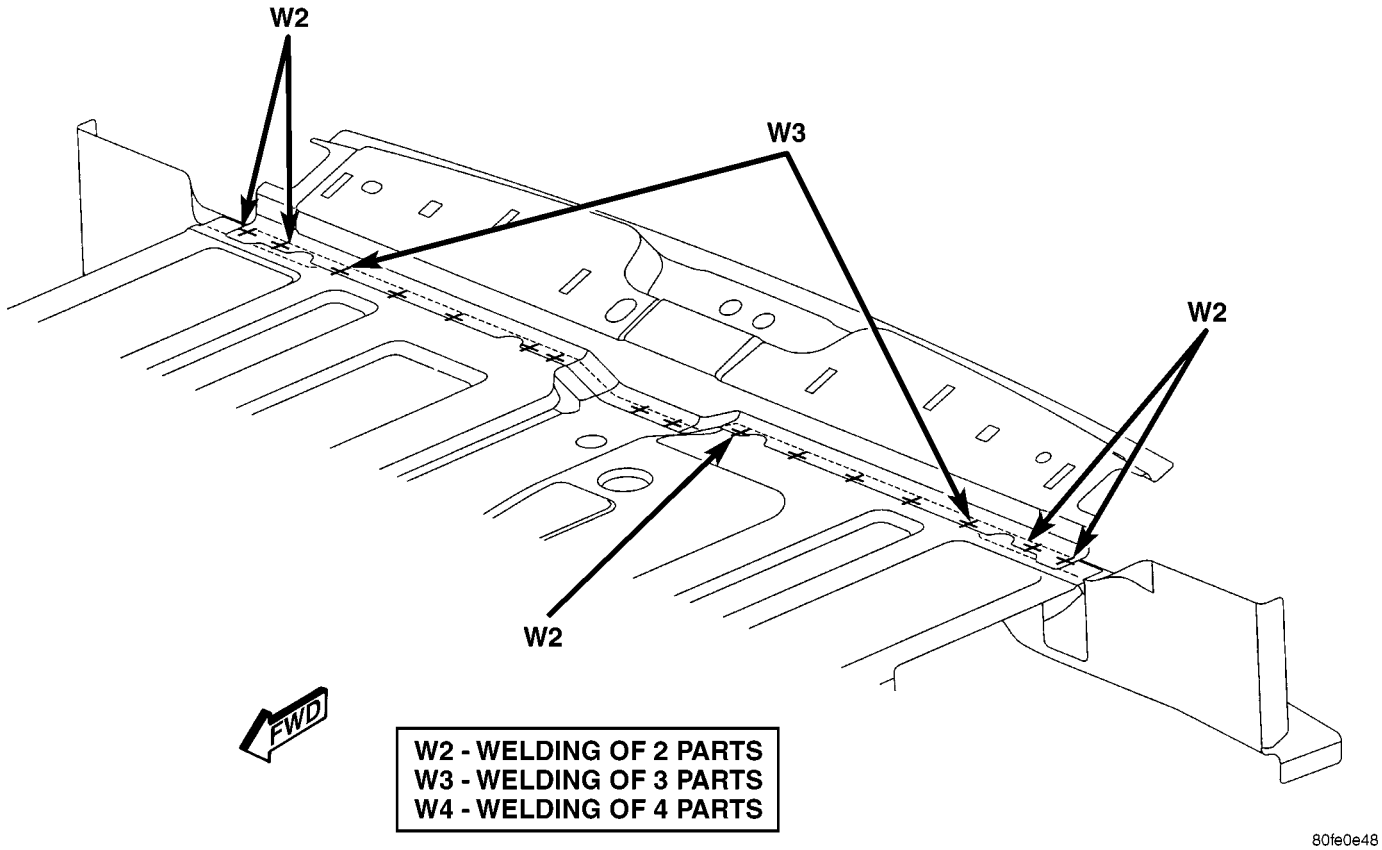

Fig. 188 FRONT LOWER LIFTGATE OPENING

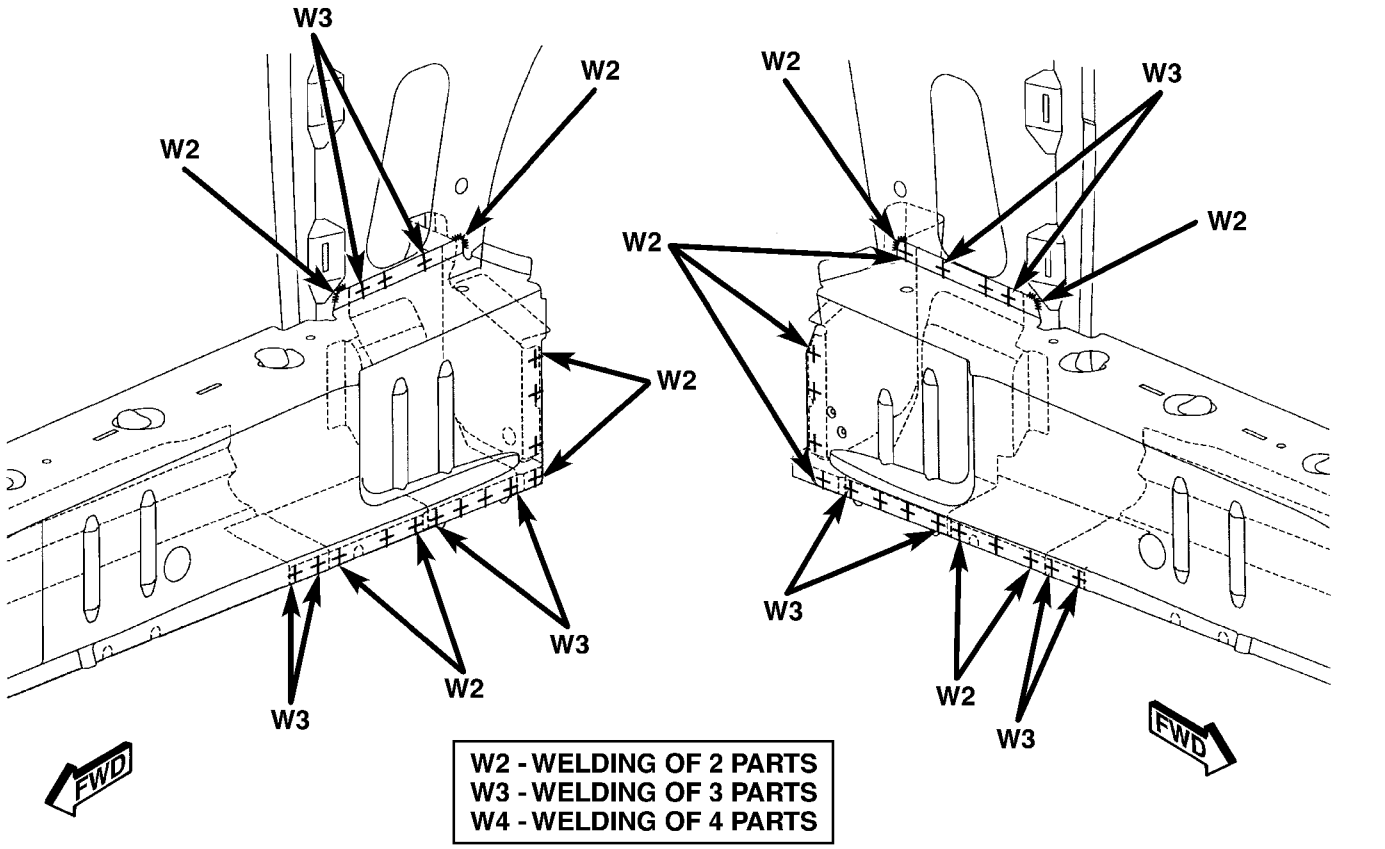

Fig. 189 REAR JACKING REINFORCEMENT - LONG WHEEL BASE ONLY

WELD LOCATIONS (Continued)

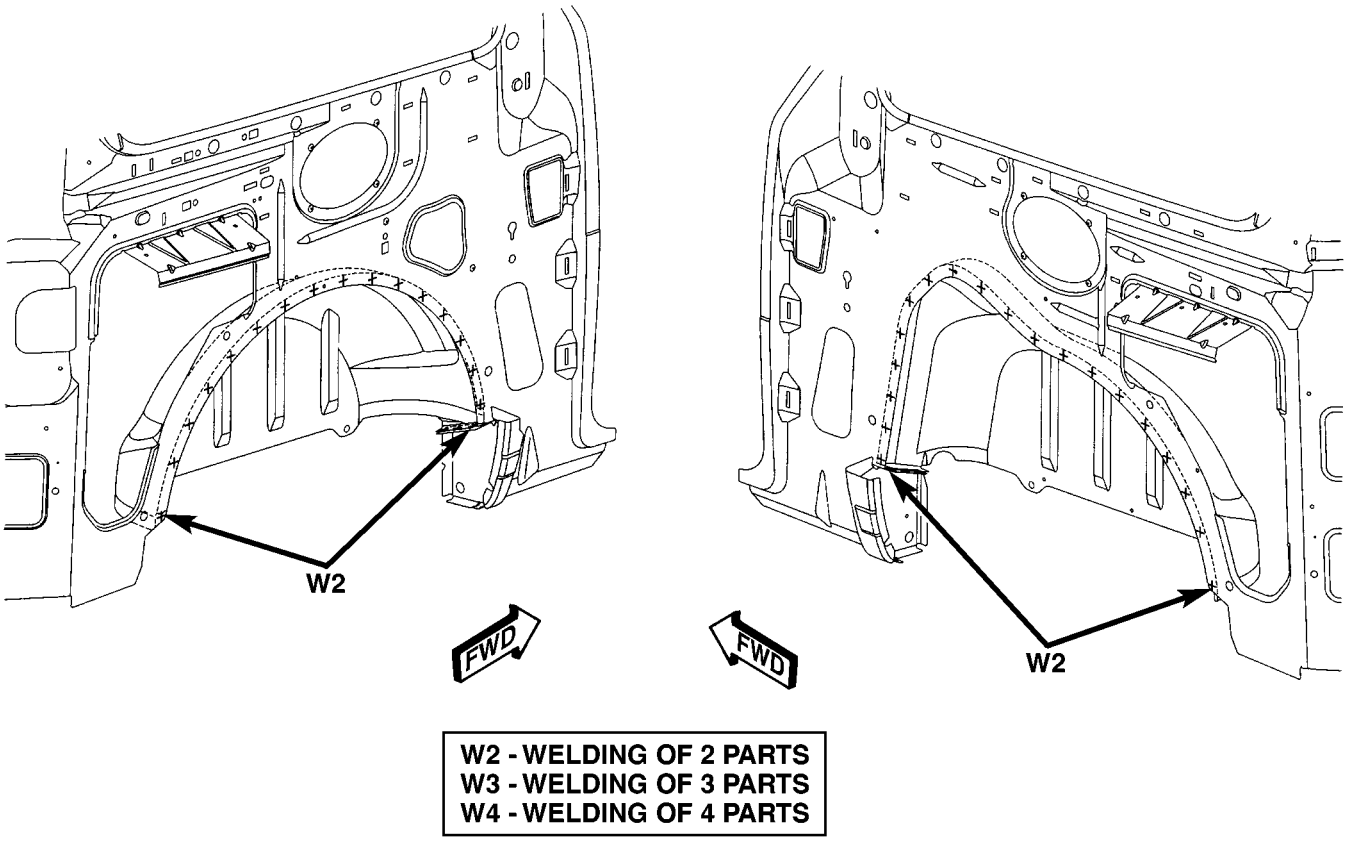

Fig. 190 INNER WHEELHOUSE - LONG WHEEL BASE ONLY

WELD LOCATIONS (Continued)

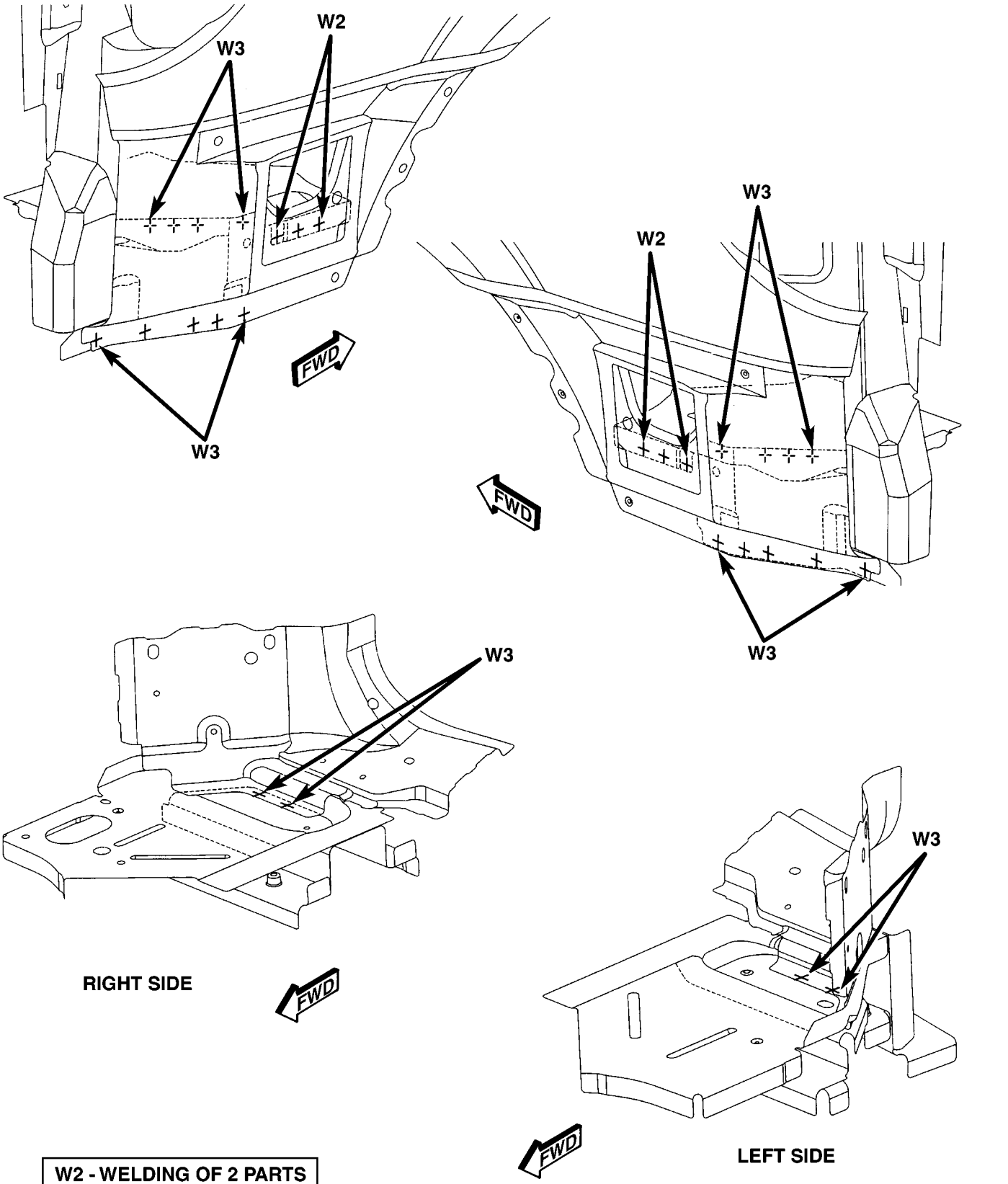

80c5feec

Fig. 191 SUSPENSION HANGER REINFORCEMENT - LONG WHEEL BASE ONLY

WELD LOCATIONS (Continued)

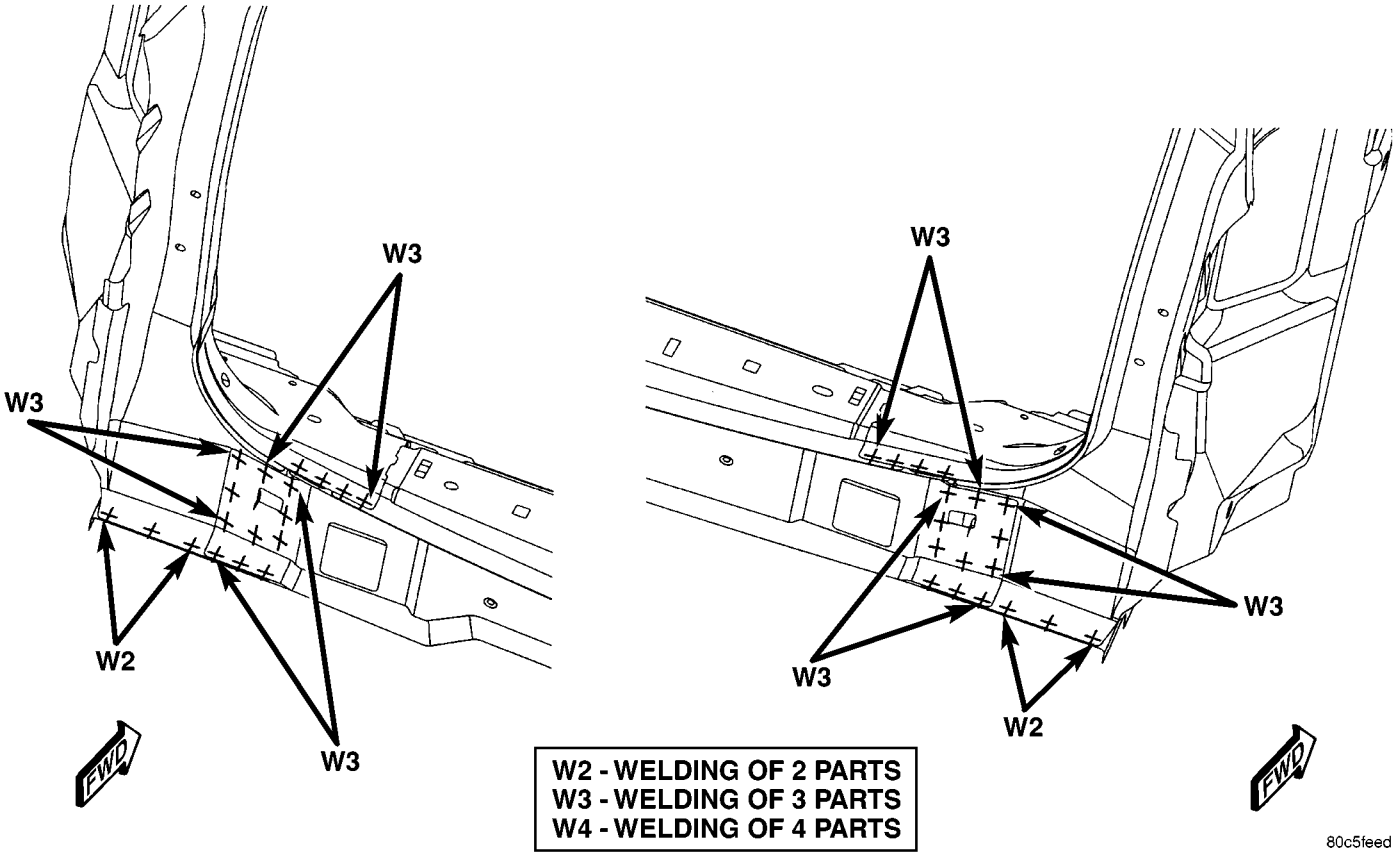

Fig. 192 LOWER LIFTGATE OPENING PANEL - LONG WHEEL BASE ONLY

WELD LOCATIONS (Continued)

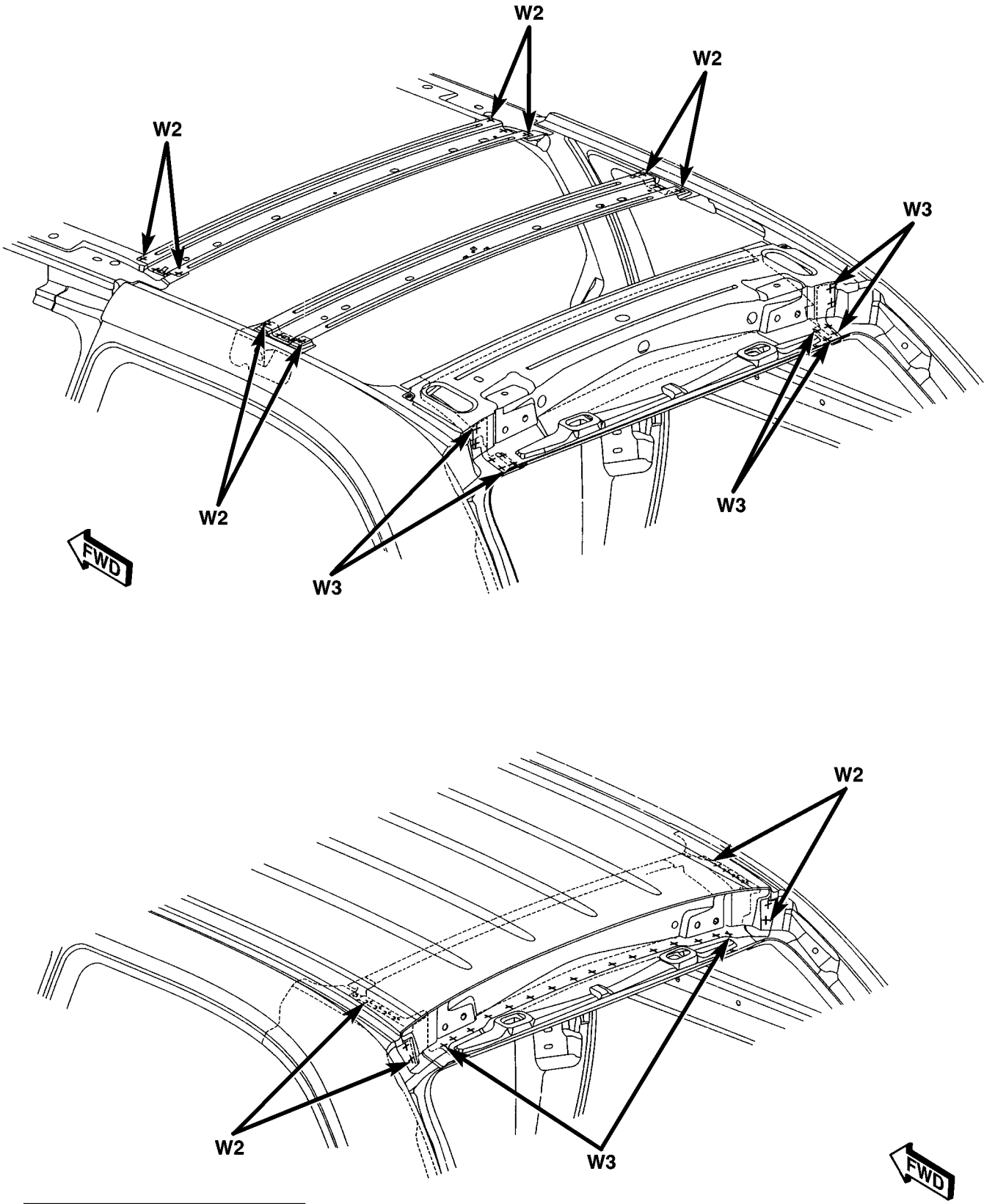

Fig. 193 ROOF BOWS/UPPER LIFTGATE FRAME - LONG WHEEL BASE ONLY

WELD LOCATIONS (Continued)

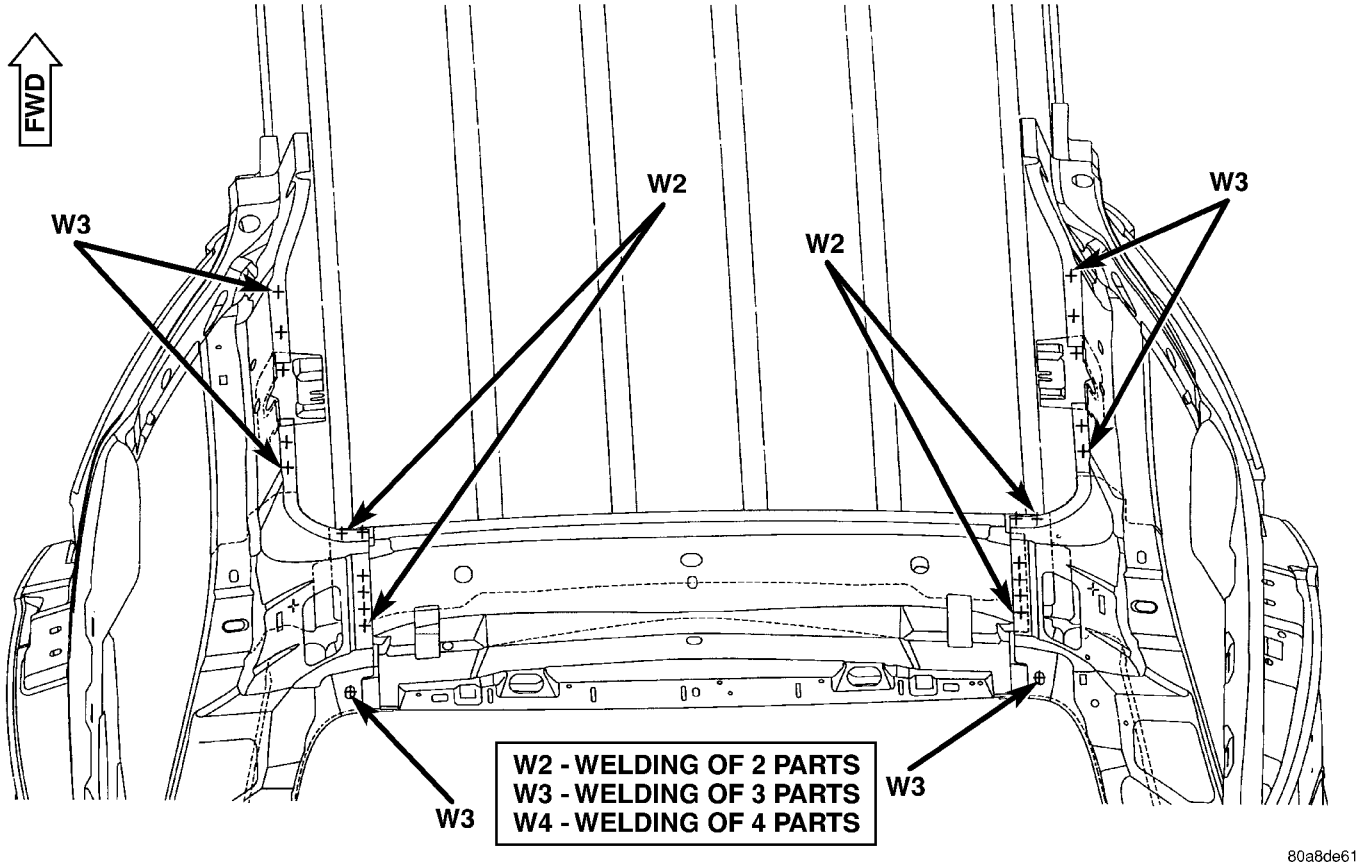

Fig. 194 BODY SIDE APERTURE/INNER QUARTER PANEL - LONG WHEEL BASE ONLY

WELD LOCATIONS (Continued)

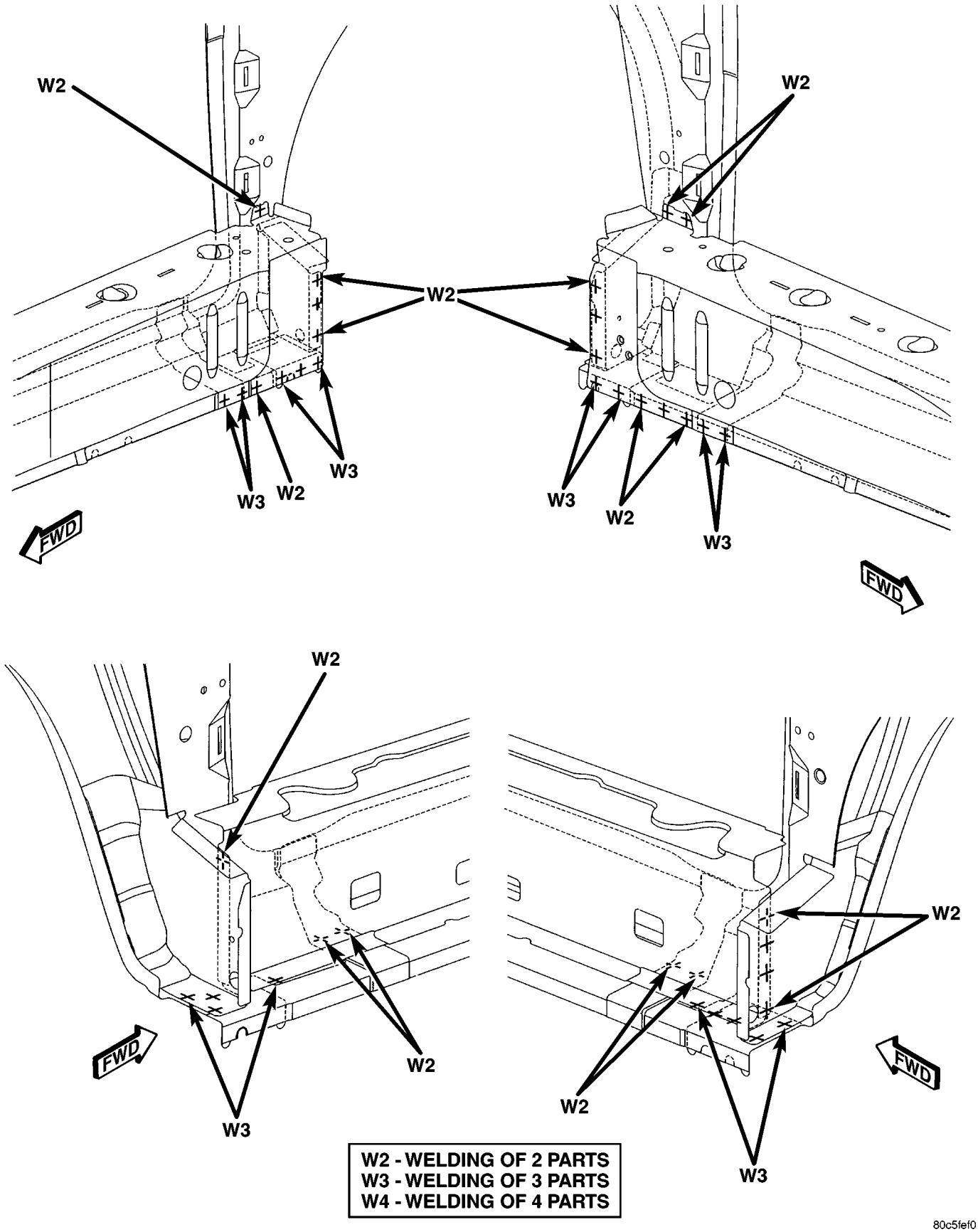

Fig. 195 REAR JACKING REINFORCEMENT - SHORT WHEEL BASE ONLY

WELD LOCATIONS (Continued)

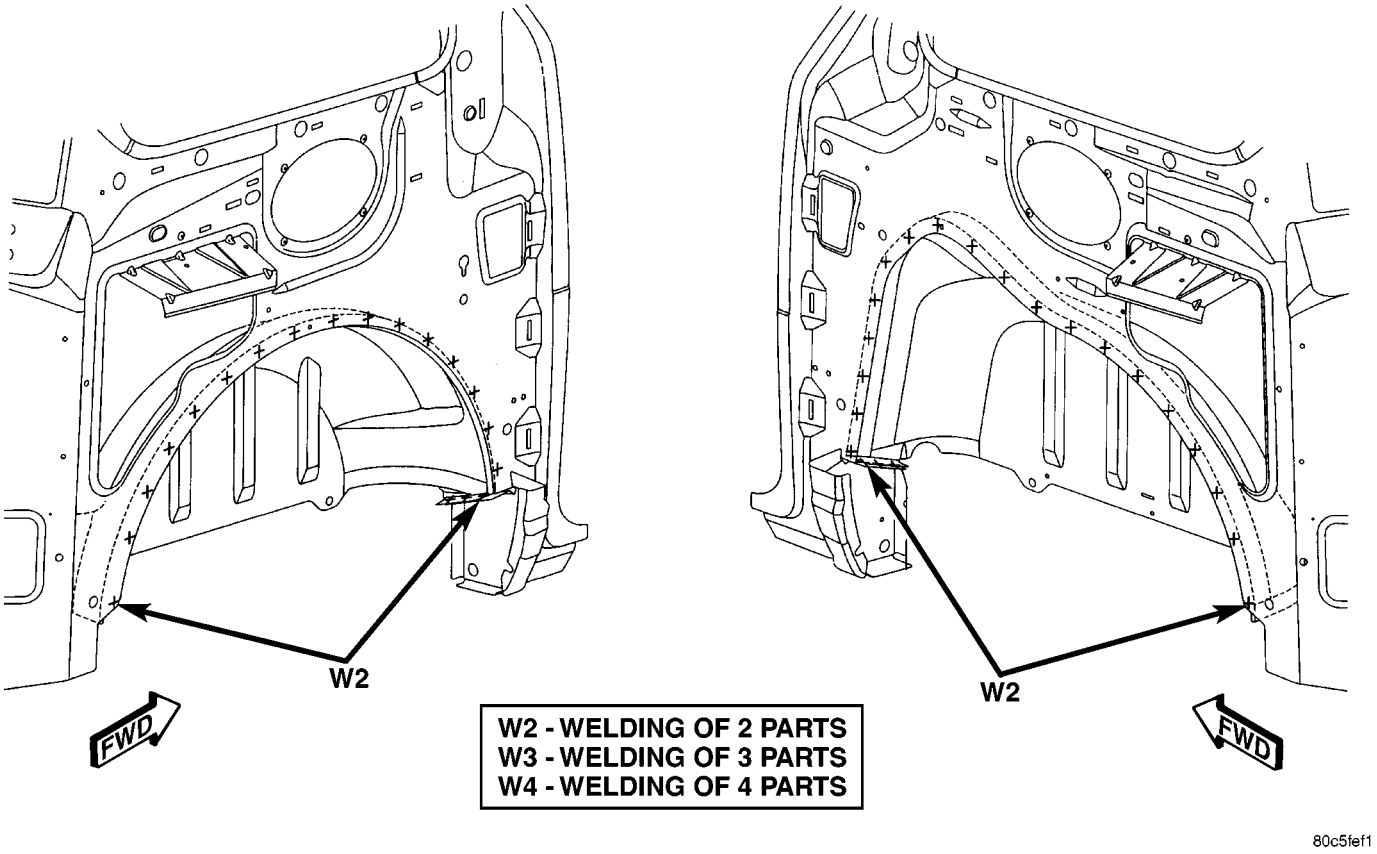

Fig. 196 INNER WHEELHOUSE/INNER QUARTER PANEL - SHORT WHEEL BASE ONLY

WELD LOCATIONS (Continued)

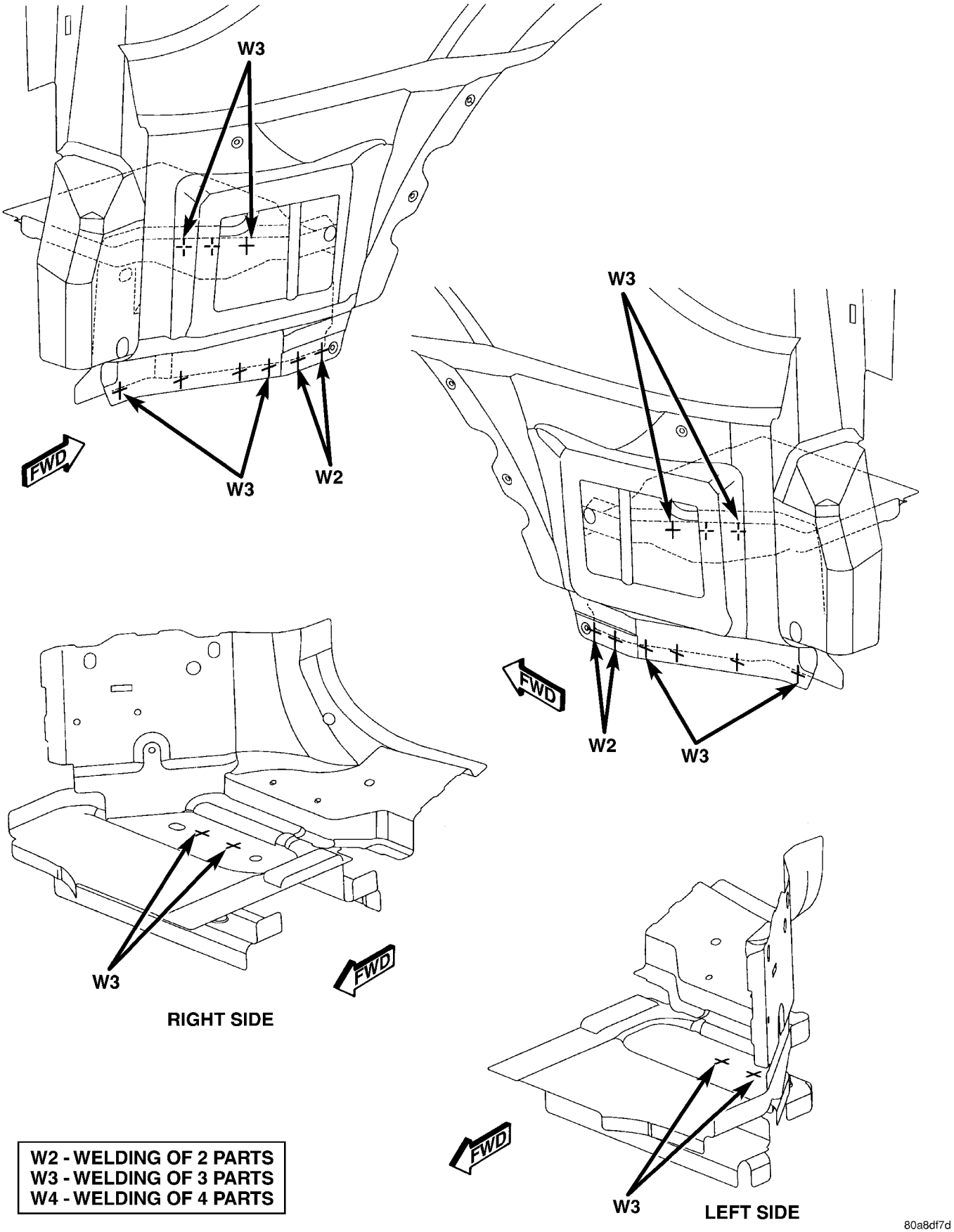

Fig. 197 SUSPENSION HANGER REINFORCEMENT - SHORT WHEEL BASE ONLY

WELD LOCATIONS (Continued)

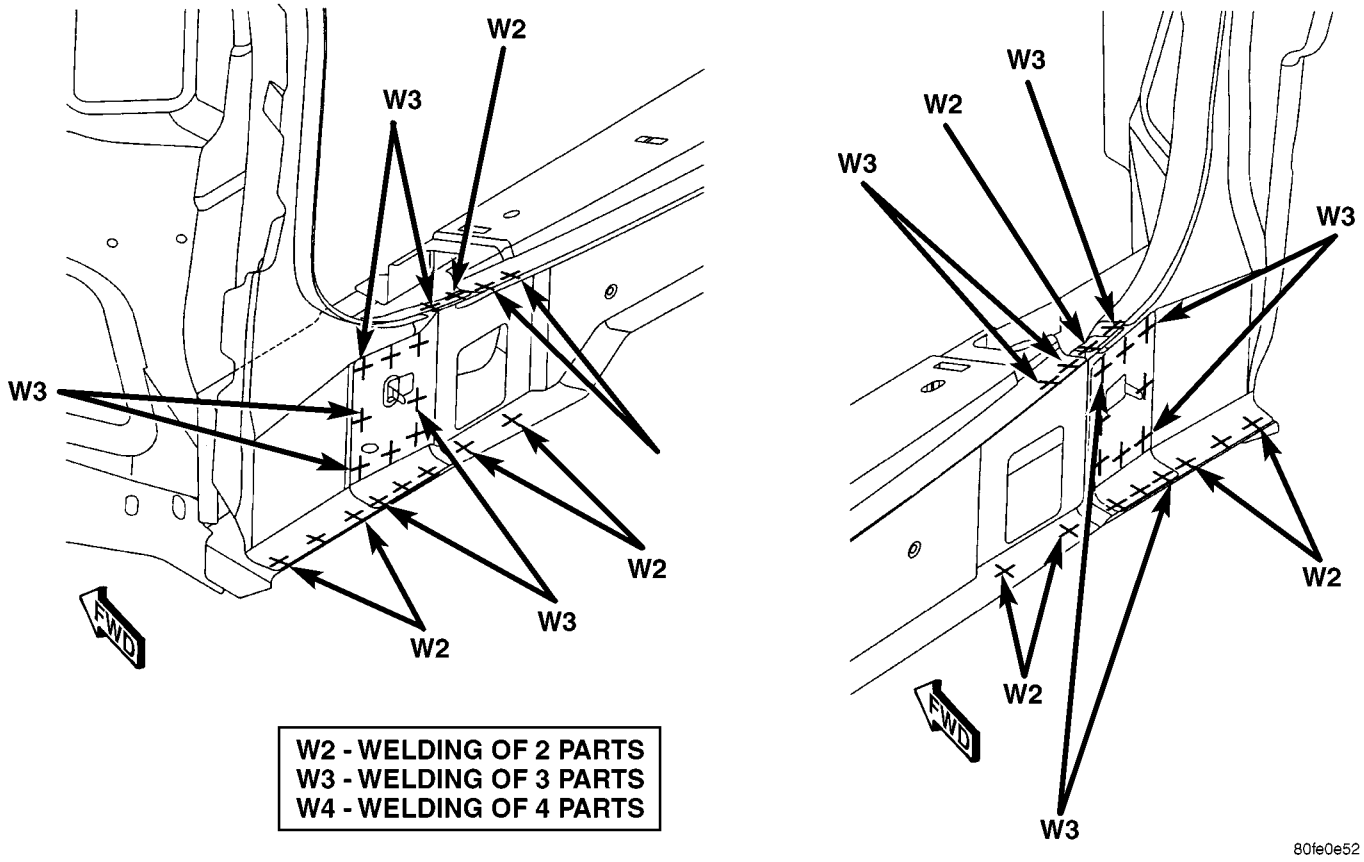

Fig. 198 LOWER LIFTGATE OPENING - SHORT WHEEL BASE ONLY

WELD LOCATIONS (Continued)

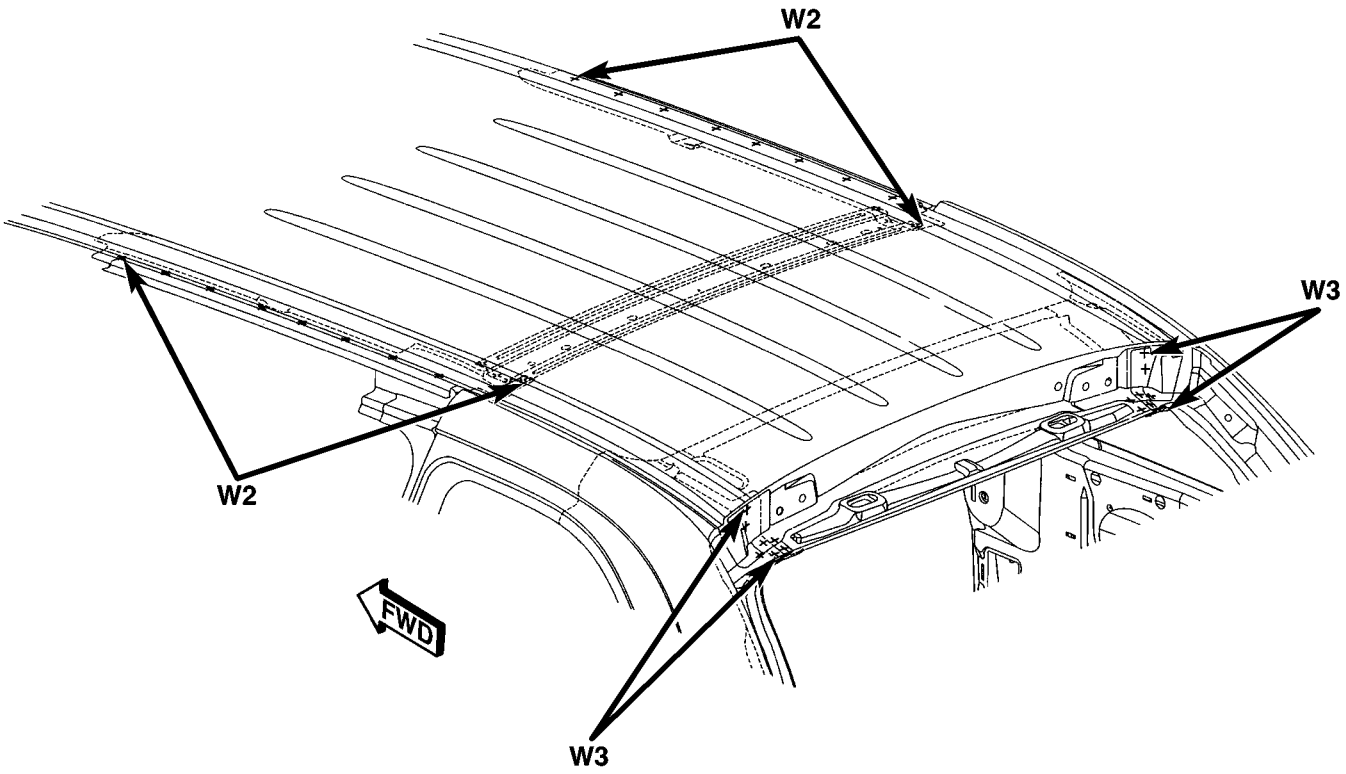

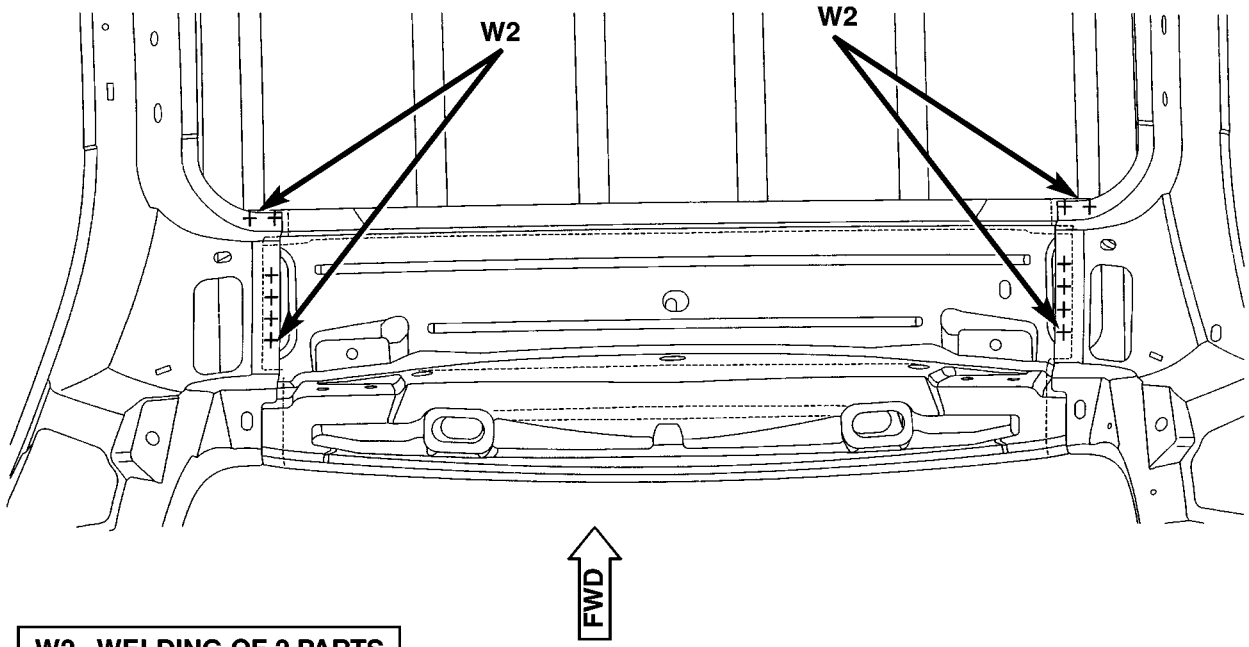

W2 - WELDING OF 2 PARTS
W3 - WELDING OF 3 PARTS
W4 - WELDING OF 4 PARTS

80c5fef4

Fig. 199 ROOF PANEL/ROOF RAIL - SHORT WHEEL BASE ONLY

WELD LOCATIONS (Continued)

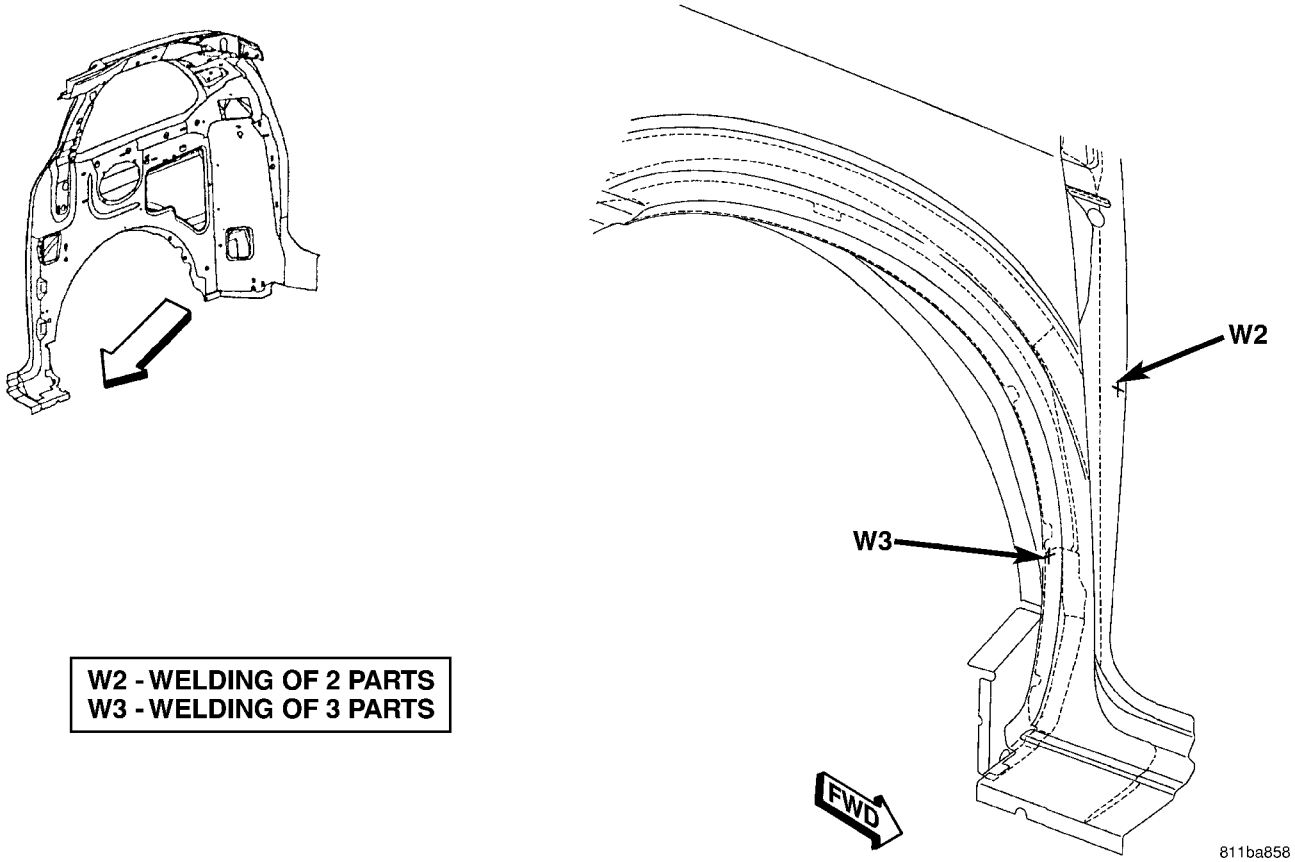

Fig. 200 RIGHT SIDE OUTER REAR WHEELHOUSE, EXTENSION AND BODY SIDE APERTURE - SHORT WHEEL BASE ONLY

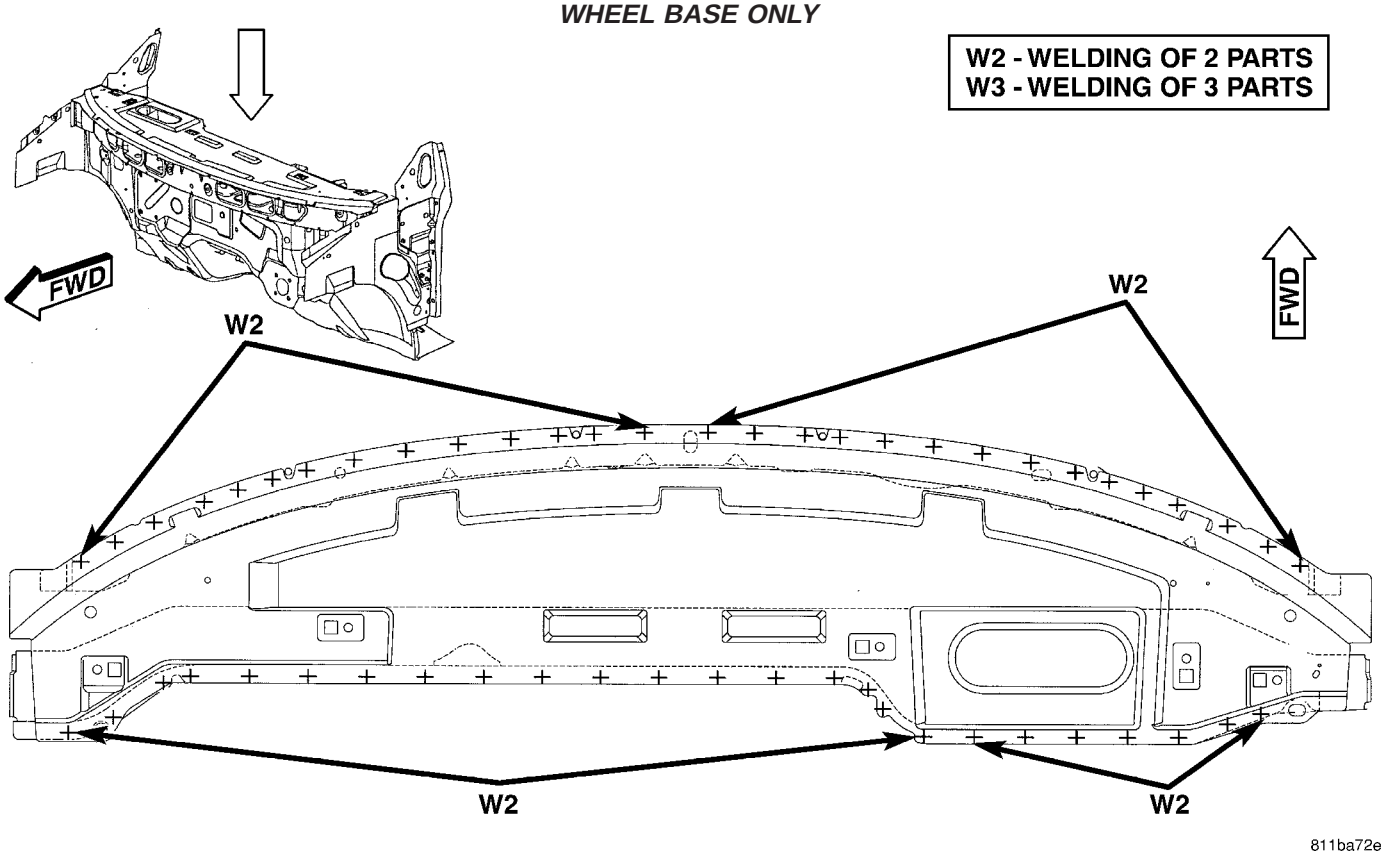

Fig. 201 UPPER COWL PLENUM AND REINFORCEMENT - RIGHT HAND DRIVE

WELD LOCATIONS (Continued)

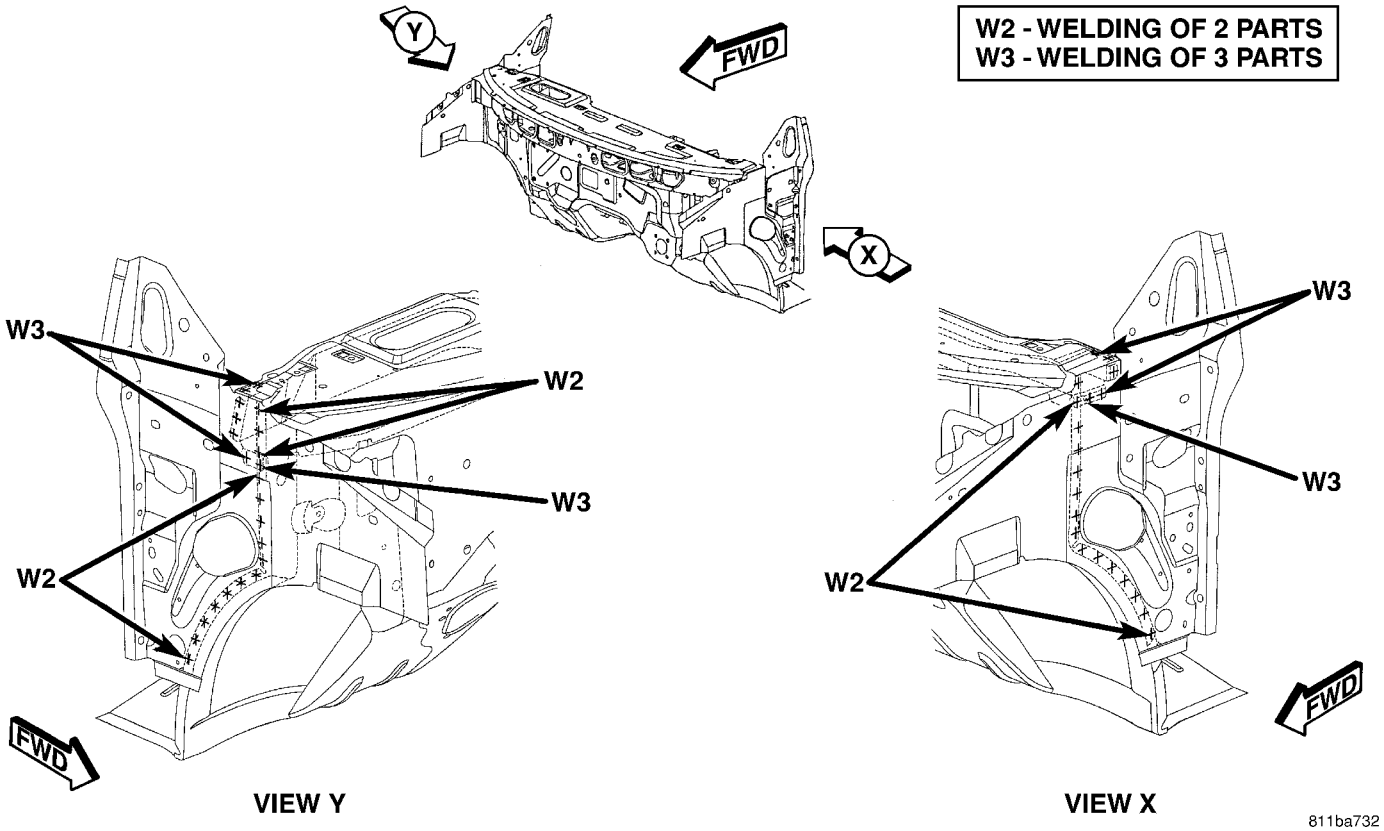

Fig. 202 COWL SIDE PANEL AND DASH PANEL - RIGHT HAND DRIVE

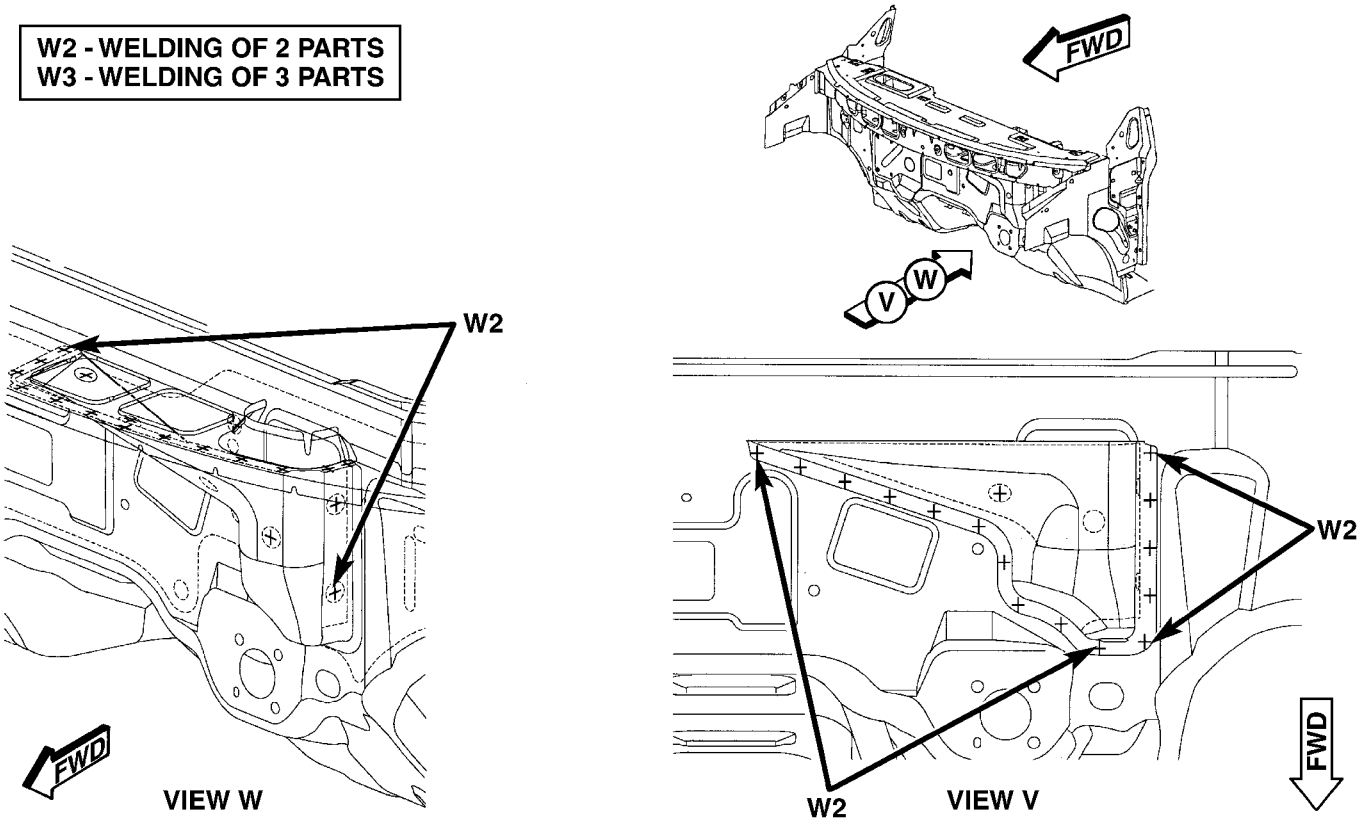

Fig. 203 LOWER COWL PLENUM, SUPPORT AND DASH PANEL - RIGHT HAND DRIVE

WELD LOCATIONS (Continued)

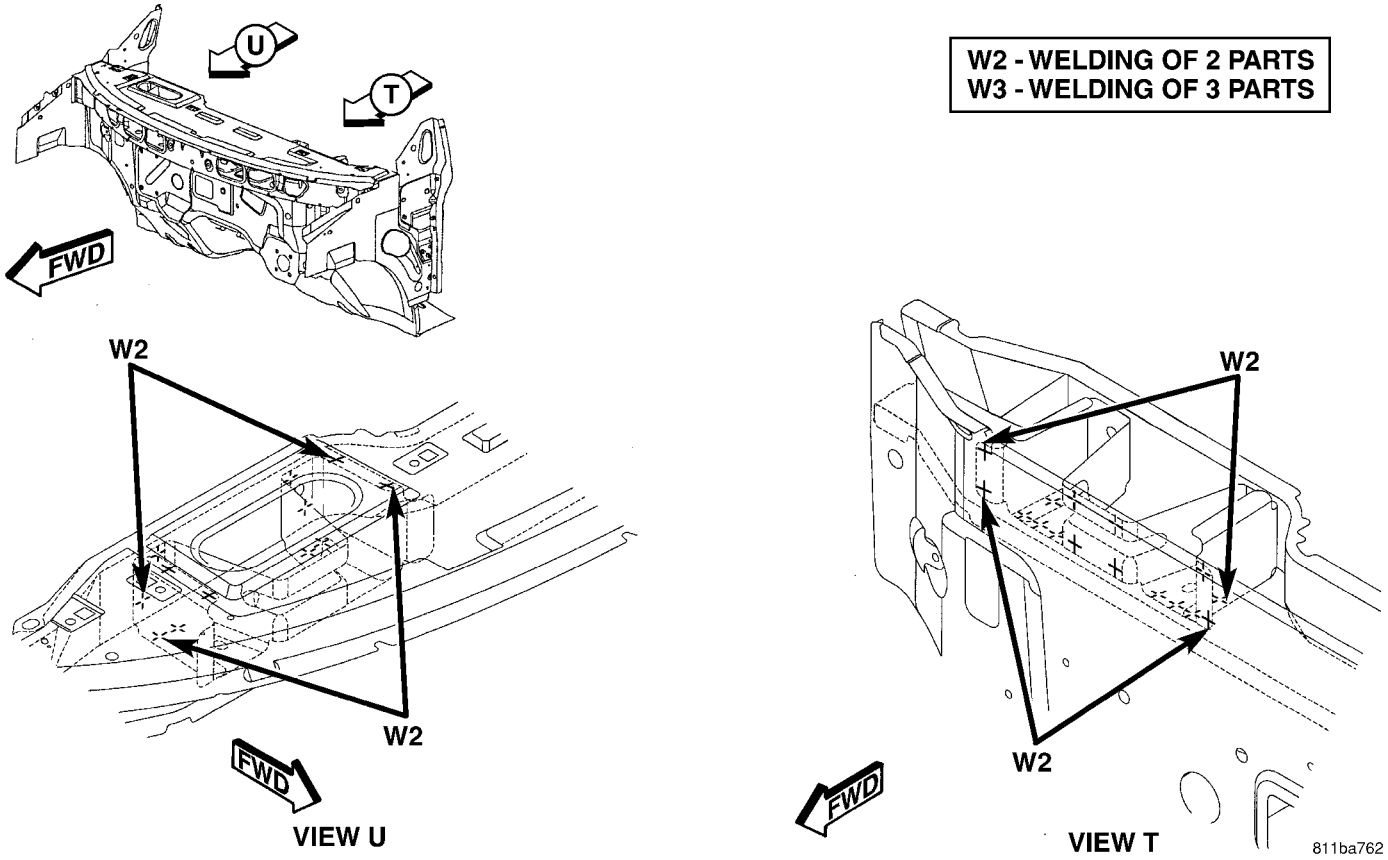

Fig. 204 STEERING COLUMN REINFORCEMENT, BELT REINFORCEMENT AND DASH PANEL - RIGHT HAND DRIVE

WELD LOCATIONS (Continued)

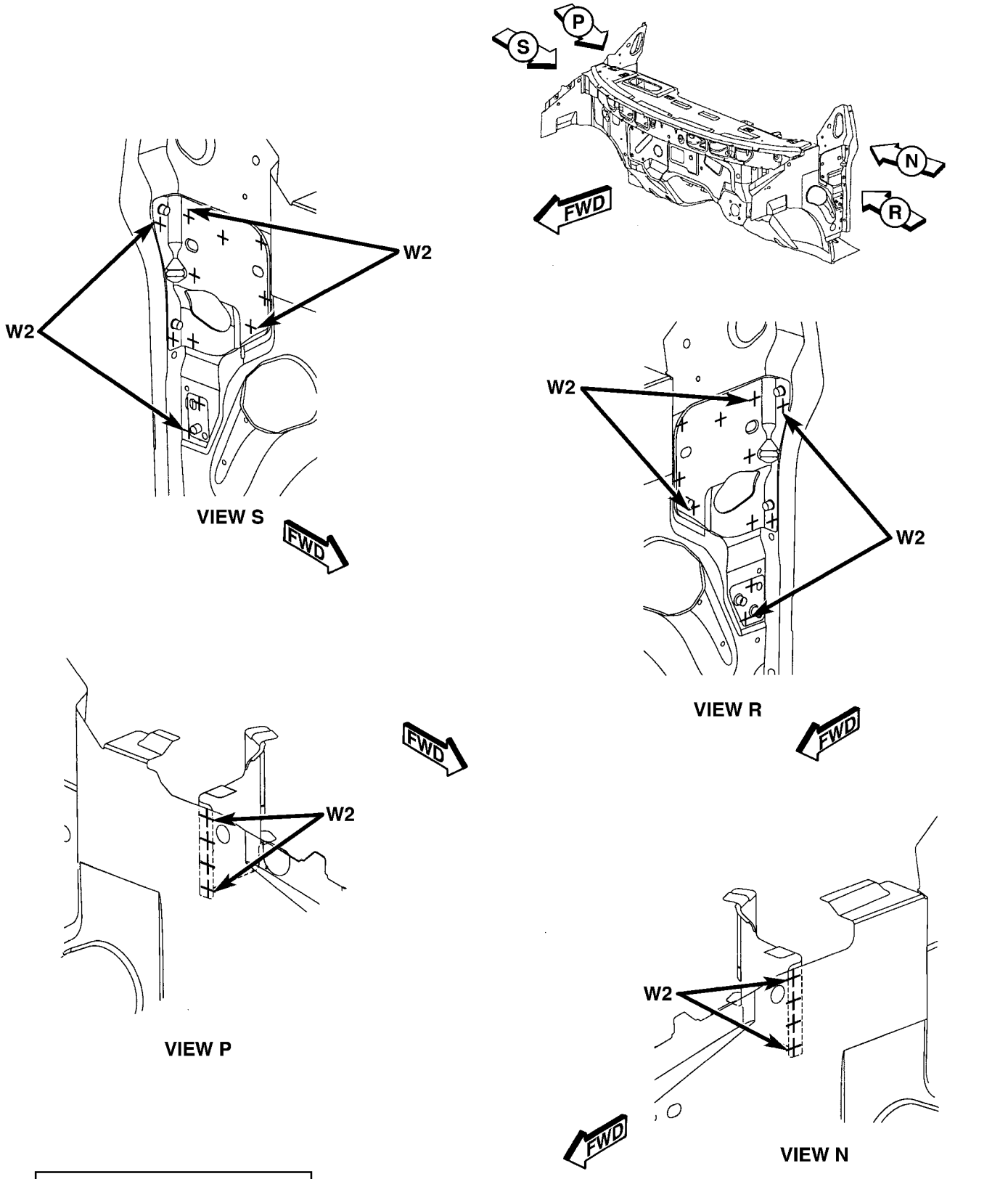

811ba76b

Fig. 205 INSTRUMENT PANEL TAPPING PLATE AND COWL SIDE PANEL - RIGHT HAND DRIVE

WELD LOCATIONS (Continued)

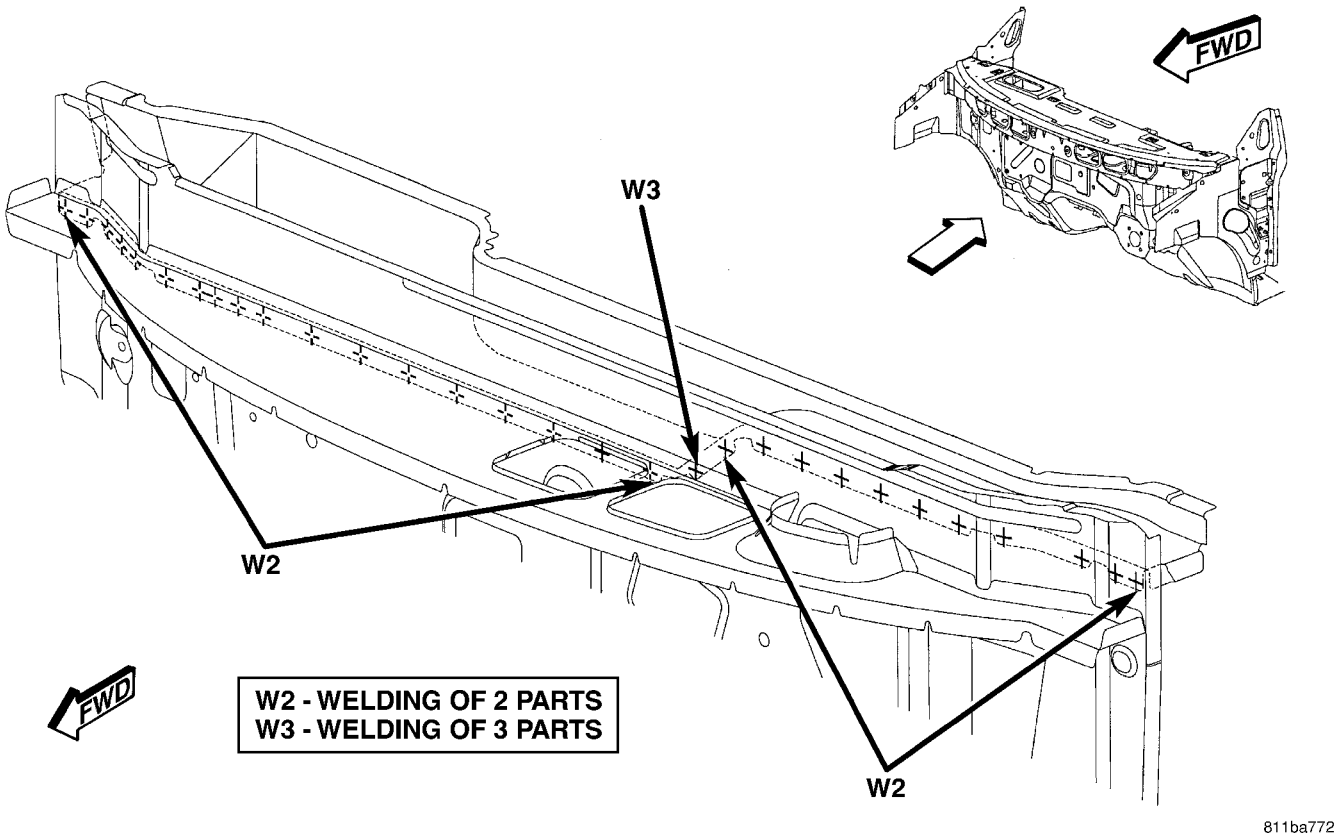

Fig. 206 DASH PANEL AND BELT REINFORCEMENT - RIGHT HAND DRIVE

WELD LOCATIONS (Continued)

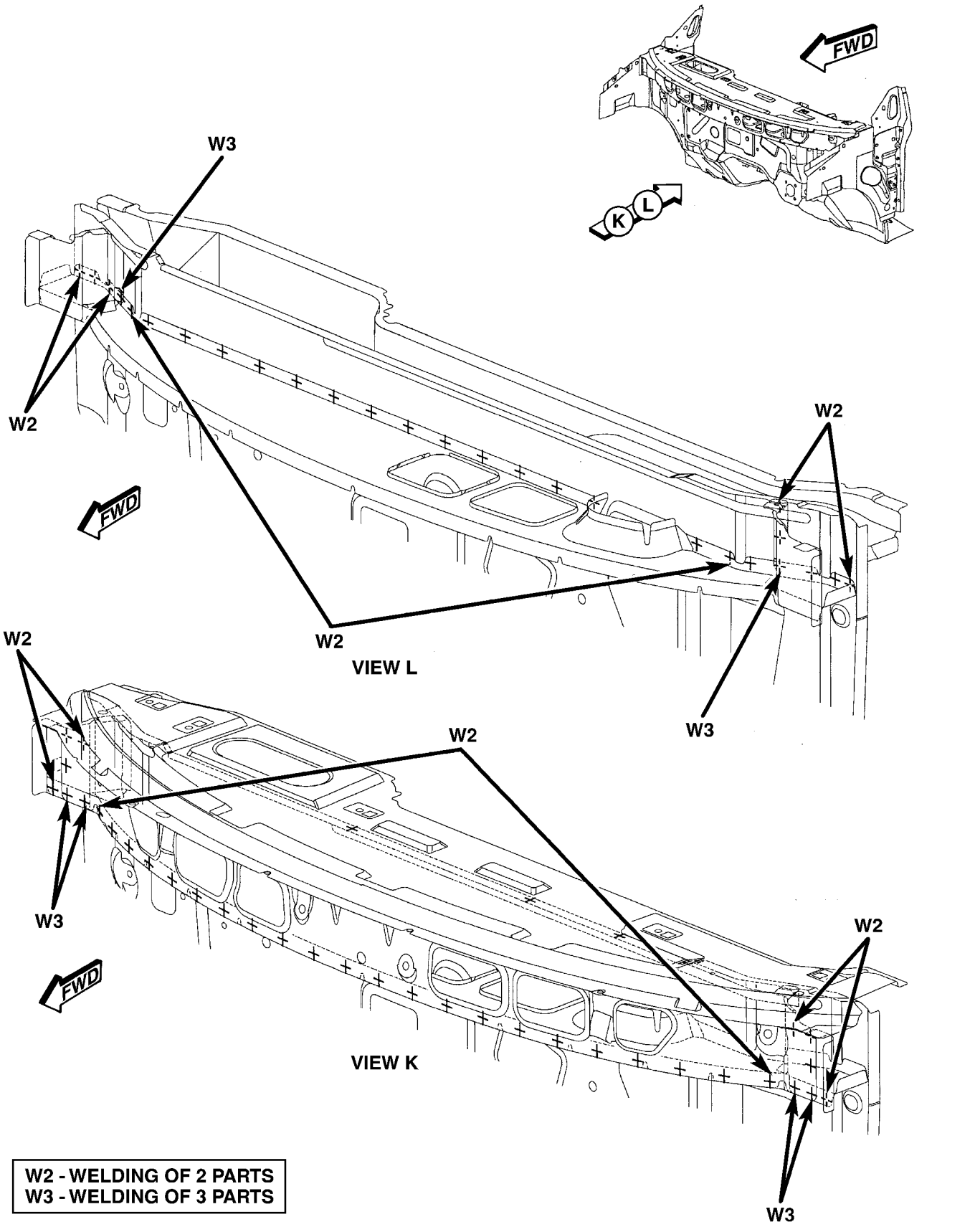

811ba77c

Fig. 207 UPPER SUPPORT, UPPER REINFORCEMENT AND UPPER COWL PLENUM - RIGHT HAND DRIVE

WELD LOCATIONS (Continued)

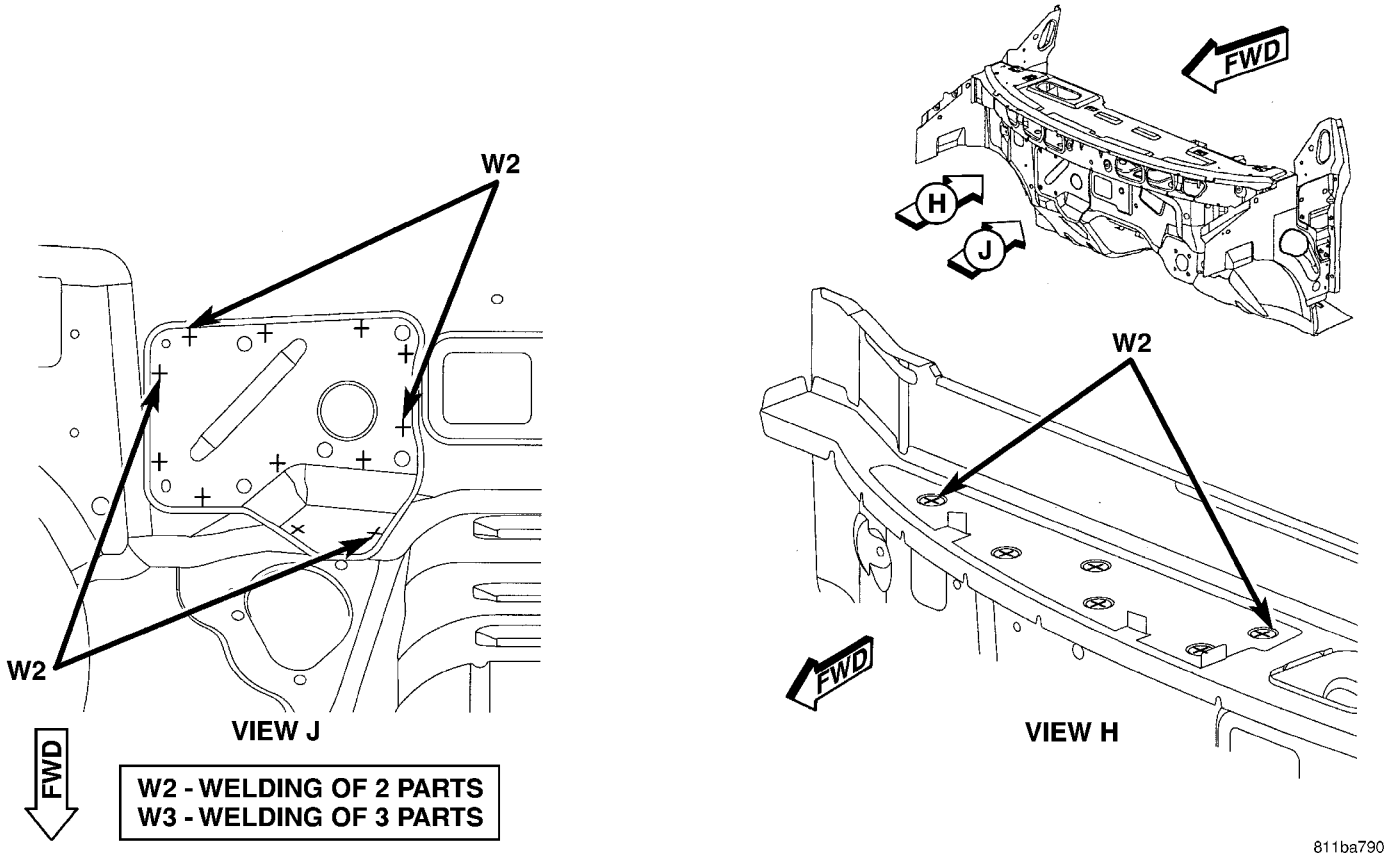

Fig. 208 UPPER SUPPORT, BRAKE PEDAL BRACKET REINFORCEMENT AND DASH PANEL - RIGHT HAND DRIVE

WELD LOCATIONS (Continued)

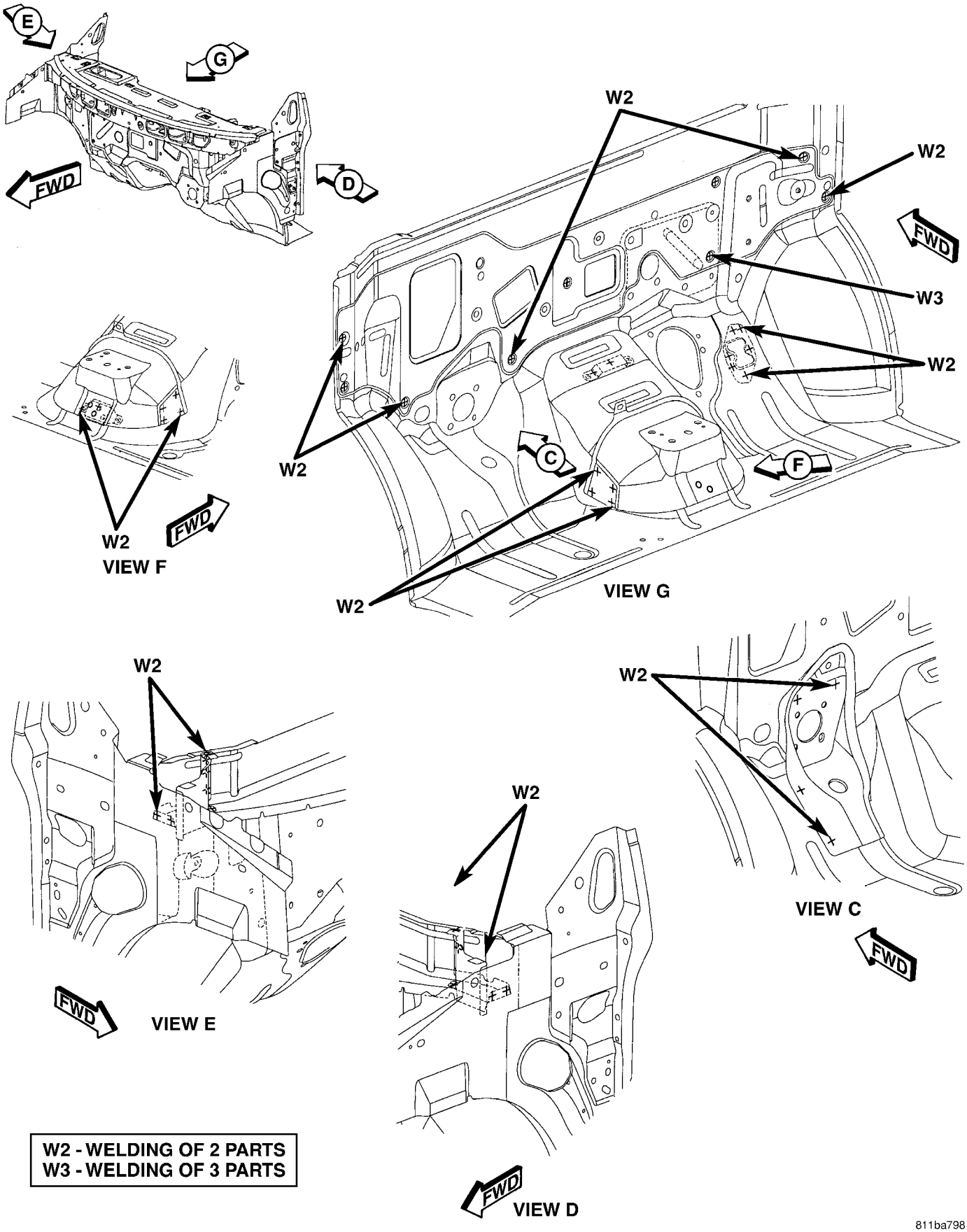

Fig. 209 REINFORCEMENT, MOUNTING BRACKETS AND DASH PANEL - RIGHT HAND DRIVE

WELD LOCATIONS (Continued)

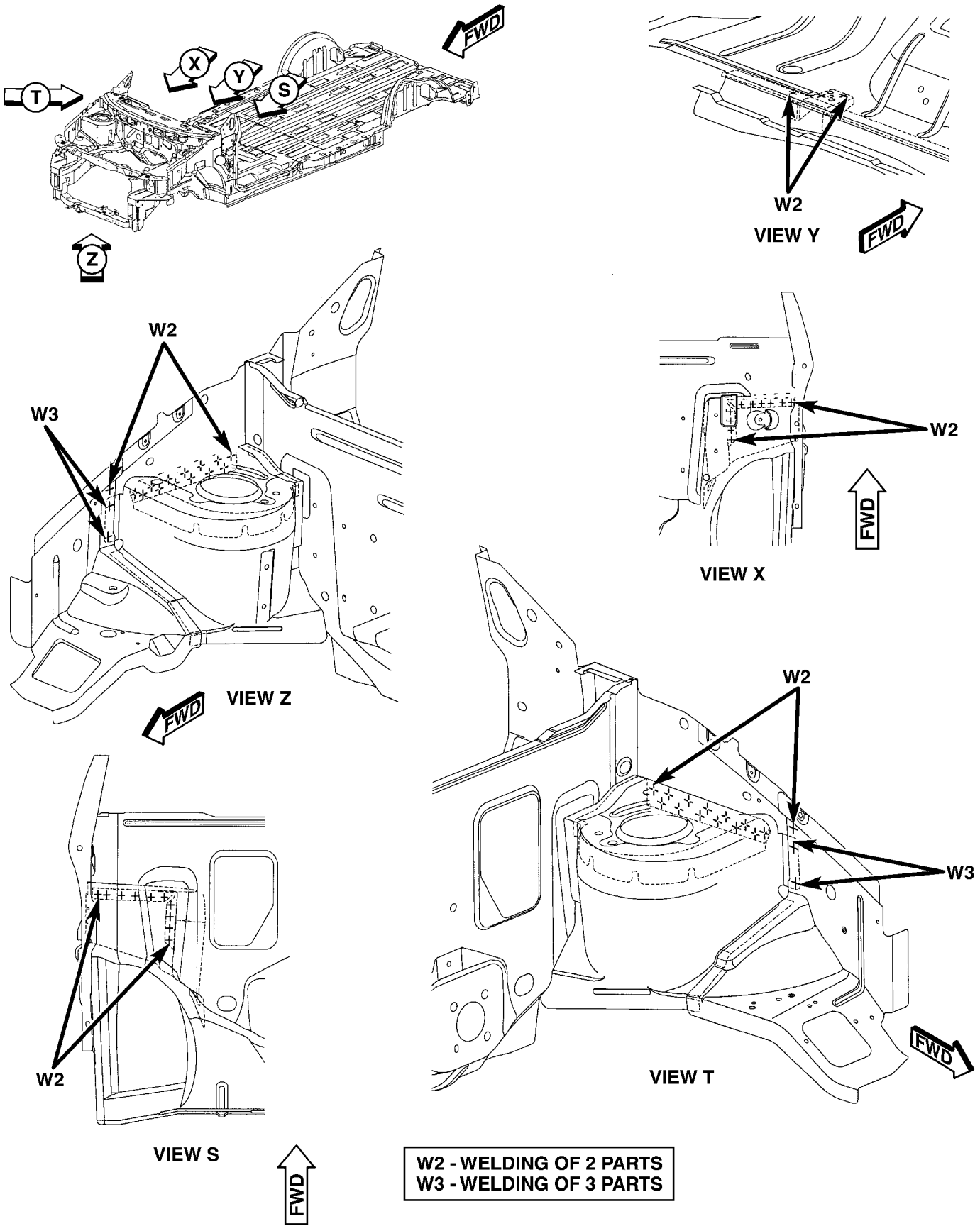

Fig. 210 STRUT TOWER, COWL SIDE PANEL - RIGHT HAND DRIVE

WELD LOCATIONS (Continued)

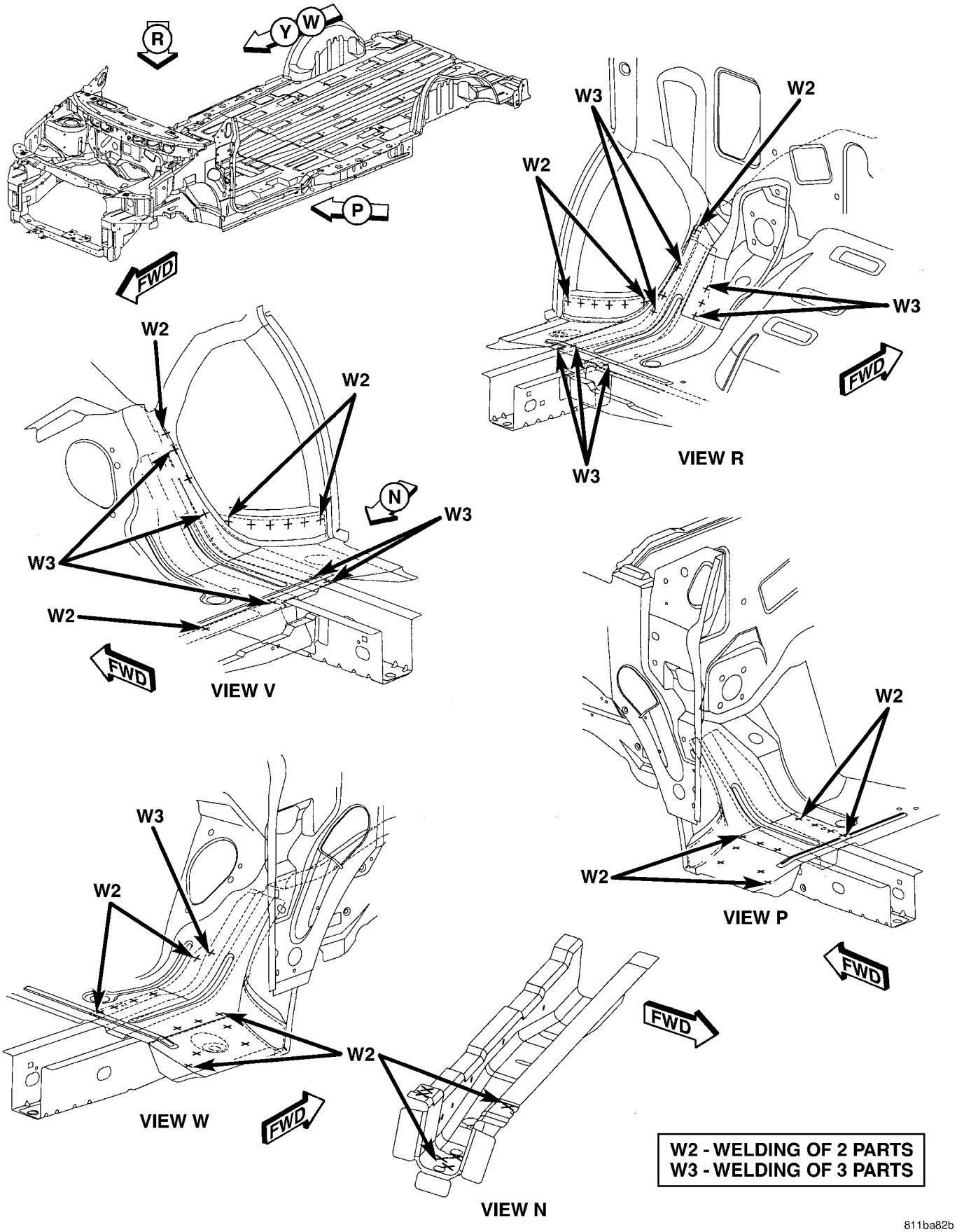

Fig. 211 REINFORCEMENTS, SIDE RAILS, COWL SIDE PANELS AND DASH PANEL - RIGHT HAND DRIVE

WELD LOCATIONS (Continued)

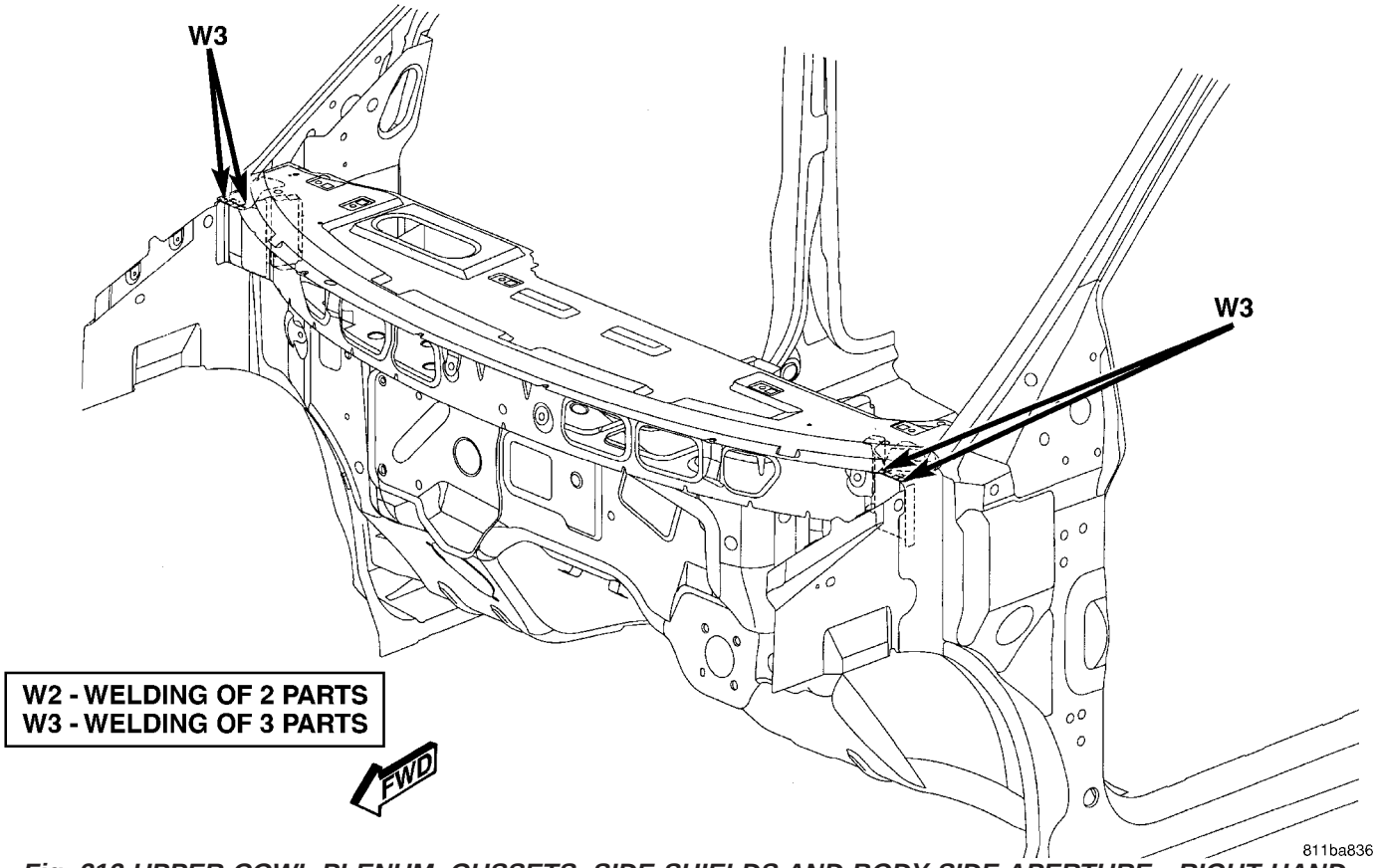

Fig. 212 UPPER COWL PLENUM, GUSSETS, SIDE SHIELDS AND BODY SIDE APERTURE - RIGHT HAND DRIVE

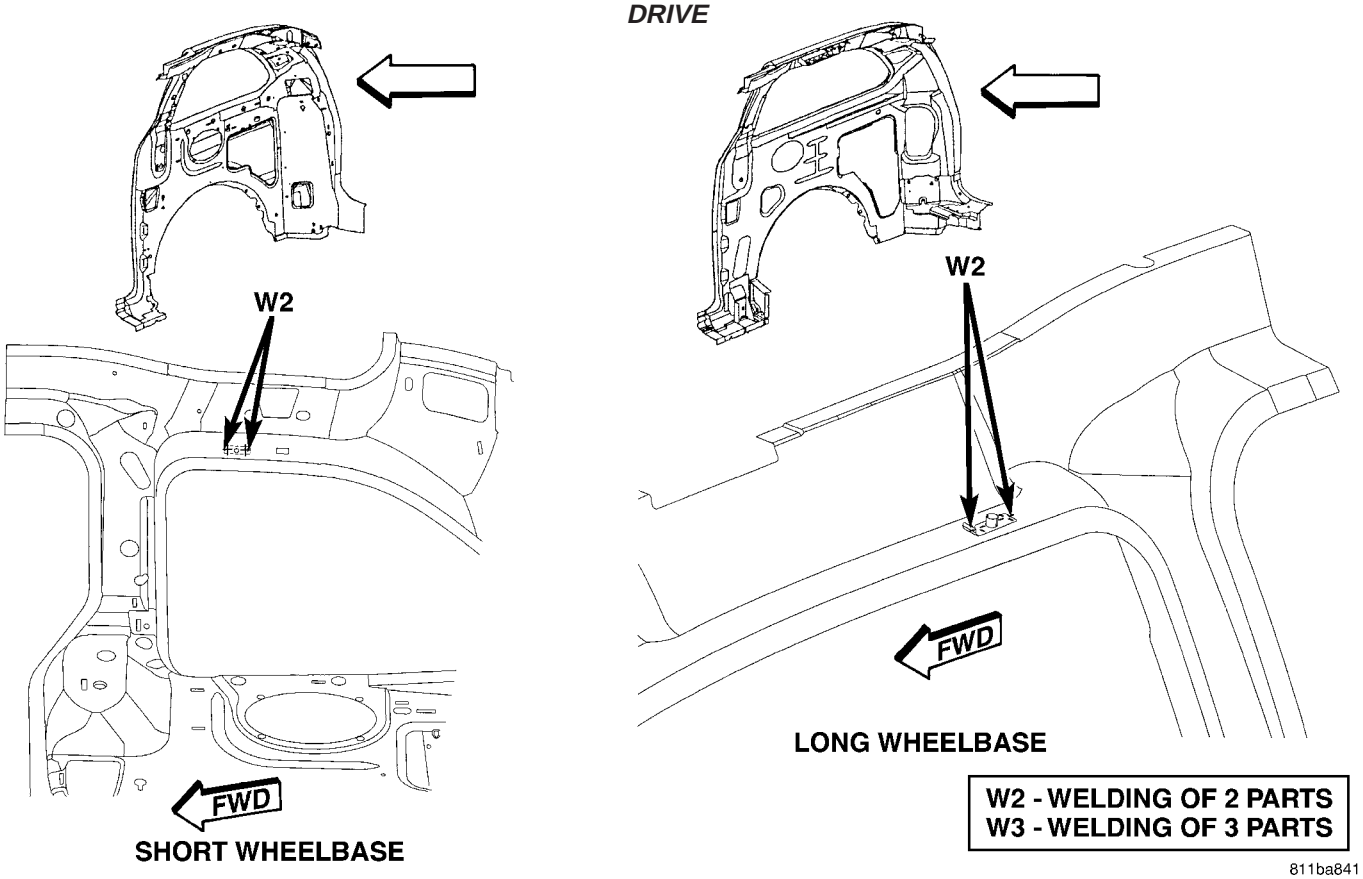

Fig. 213 SIDE GLASS ANTENNA TAPPING PLATE AND INNER BODY SIDE APERTURE - RIGHT HAND DRIVE

WELD LOCATIONS (Continued)

SPECIFICATIONS - WELD LOCATIONS - FOLD-IN-FLOOR

INDEX

DESCRIPTION	FIGURE
LOWER LADDER (1 OF 4)	214
LOWER LADDER (2 OF 4)	215
LOWER LADDER (3 OF 4)	216
LOWER LADDER (4 OF 4)	217
MISCELLANEOUS WELDS (1 OF 2)	218
MISCELLANEOUS WELDS (2 OF 2)	219
UNDERBODY (1 OF 4)	220
UNDERBODY (2 OF 4)	221
UNDERBODY (3 OF 4)	222
UNDERBODY (4 OF 4)	223
UPPER LADDER (1 OF 2)	224
UPPER LADDER (2 OF 2)	225
UNDERBODY COMPLETE (1 OF 8)	226
UNDERBODY COMPLETE (2 OF 8)	227
UNDERBODY COMPLETE (3 OF 8)	228
UNDERBODY COMPLETE (4 OF 8)	229
UNDERBODY COMPLETE (5 OF 8)	230
UNDERBODY COMPLETE (6 OF 8)	231
UNDERBODY COMPLETE (7 OF 8)	232
UNDERBODY COMPLETE (8 OF 8)	233
LADDER COMPLETE (1 OF 6)	234
LADDER COMPLETE (2 OF 6)	235
LADDER COMPLETE (3 OF 6)	236
LADDER COMPLETE (4 OF 6)	237
LADDER COMPLETE (5 OF 6)	238
LADDER COMPLETE (6 OF 6)	239

WELD LOCATIONS (Continued)

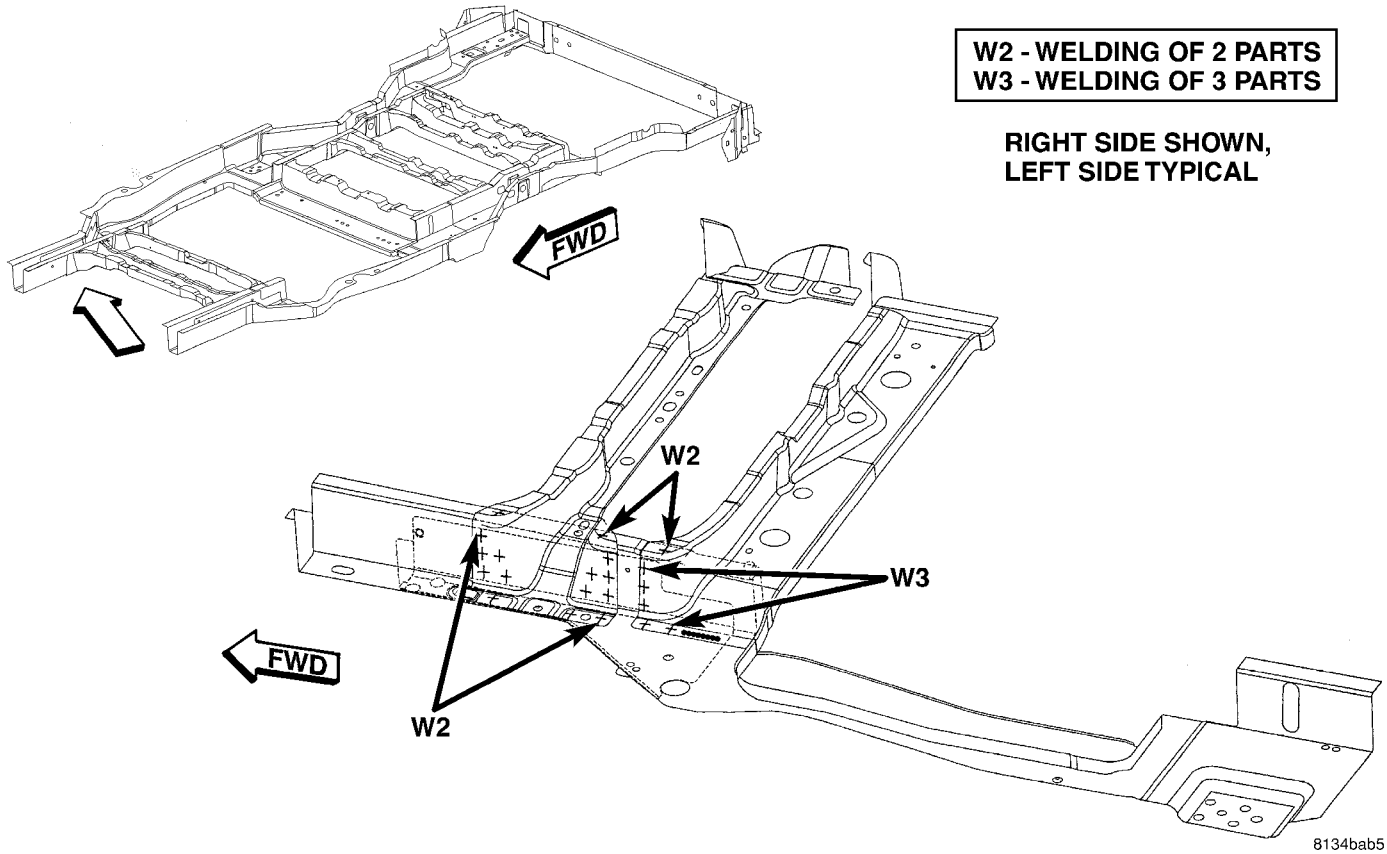

Fig. 214 LOWER LADDER (1 OF 4)

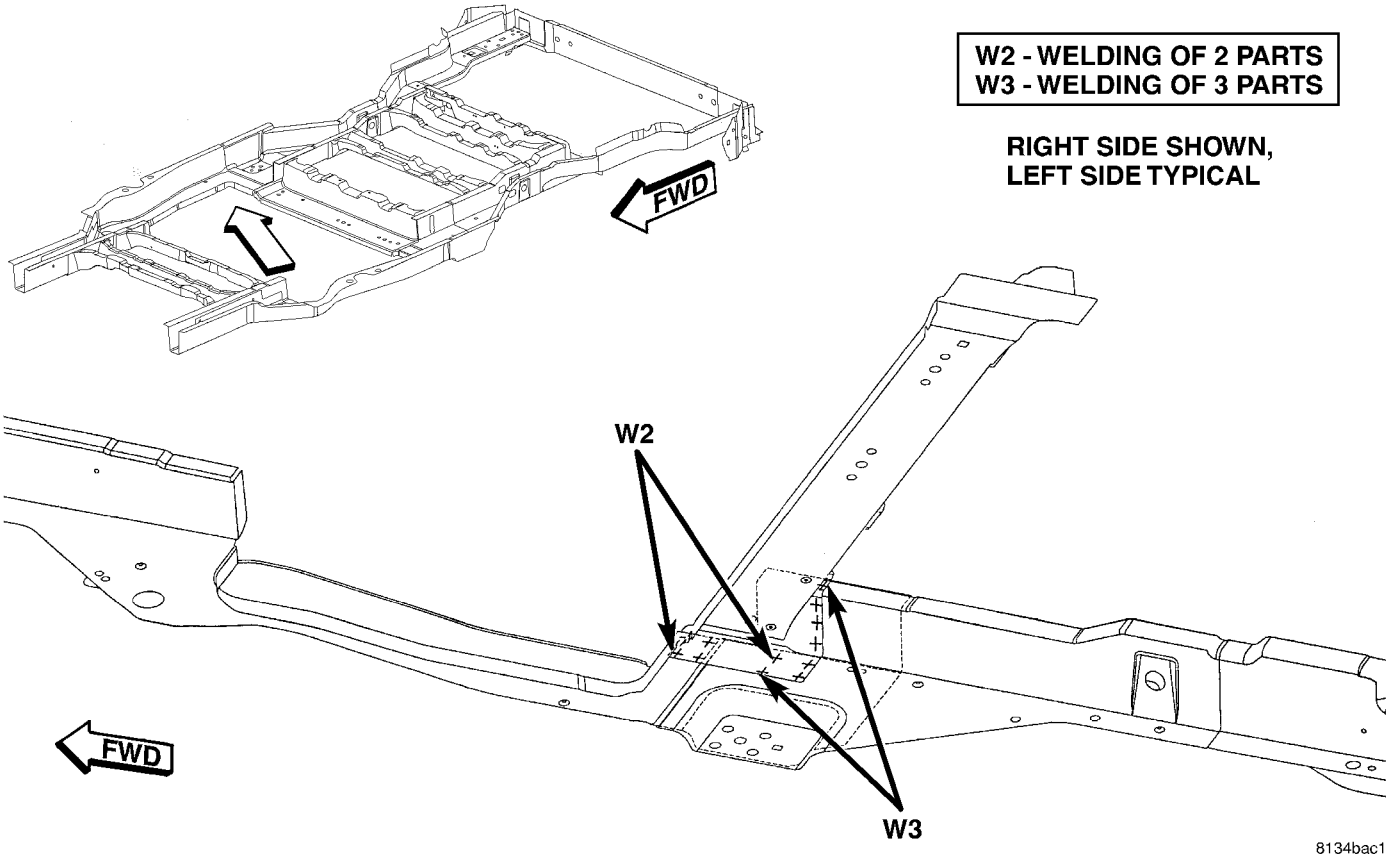

Fig. 215 LOWER LADDER (2 OF 4)

WELD LOCATIONS (Continued)

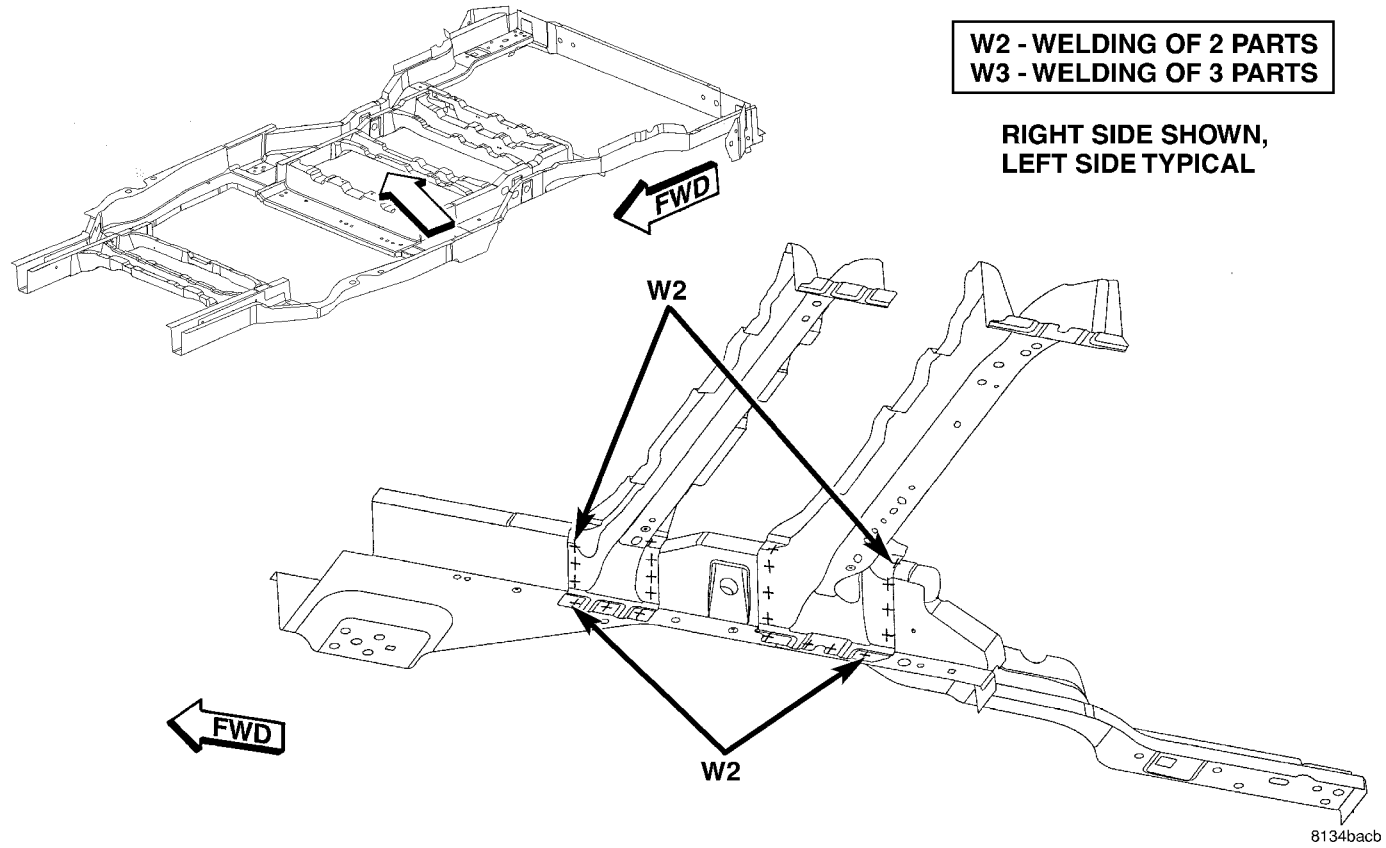

Fig. 216 LOWER LADDER (3 OF 4)

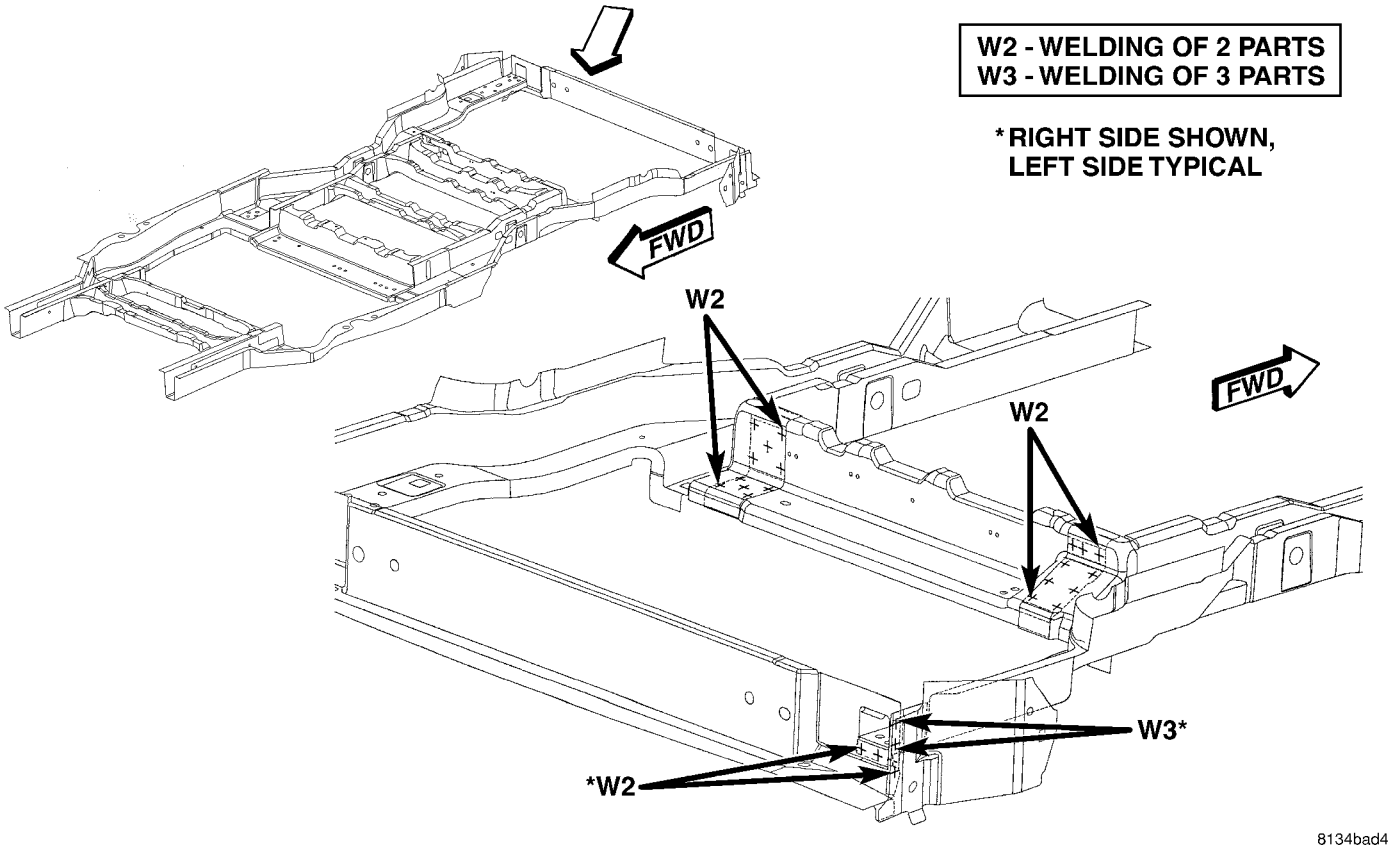

Fig. 217 LOWER LADDER (4 OF 4)

WELD LOCATIONS (Continued)

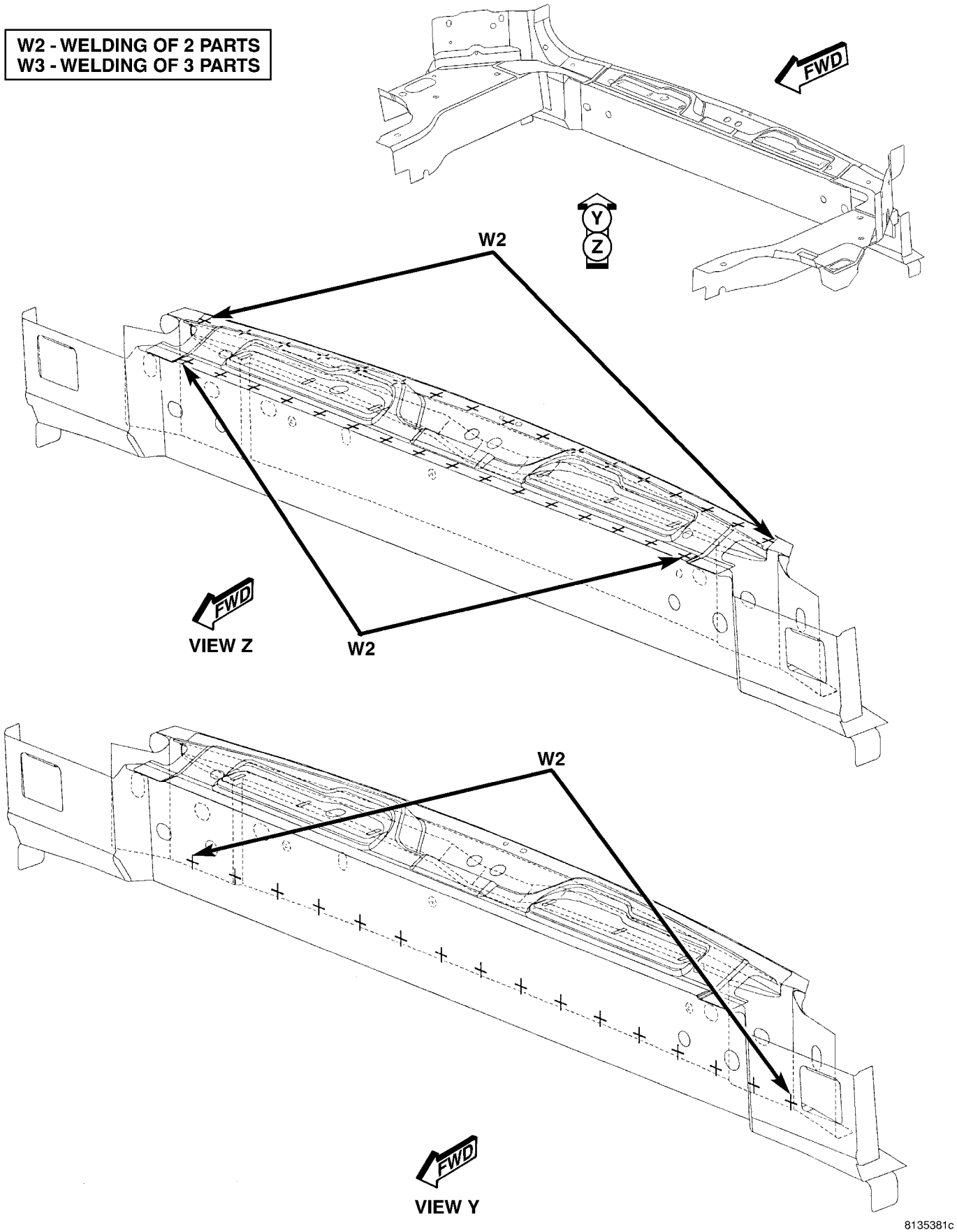

Fig. 218 MISCELLANEOUS WELDS (1 OF 2)

WELD LOCATIONS (Continued)

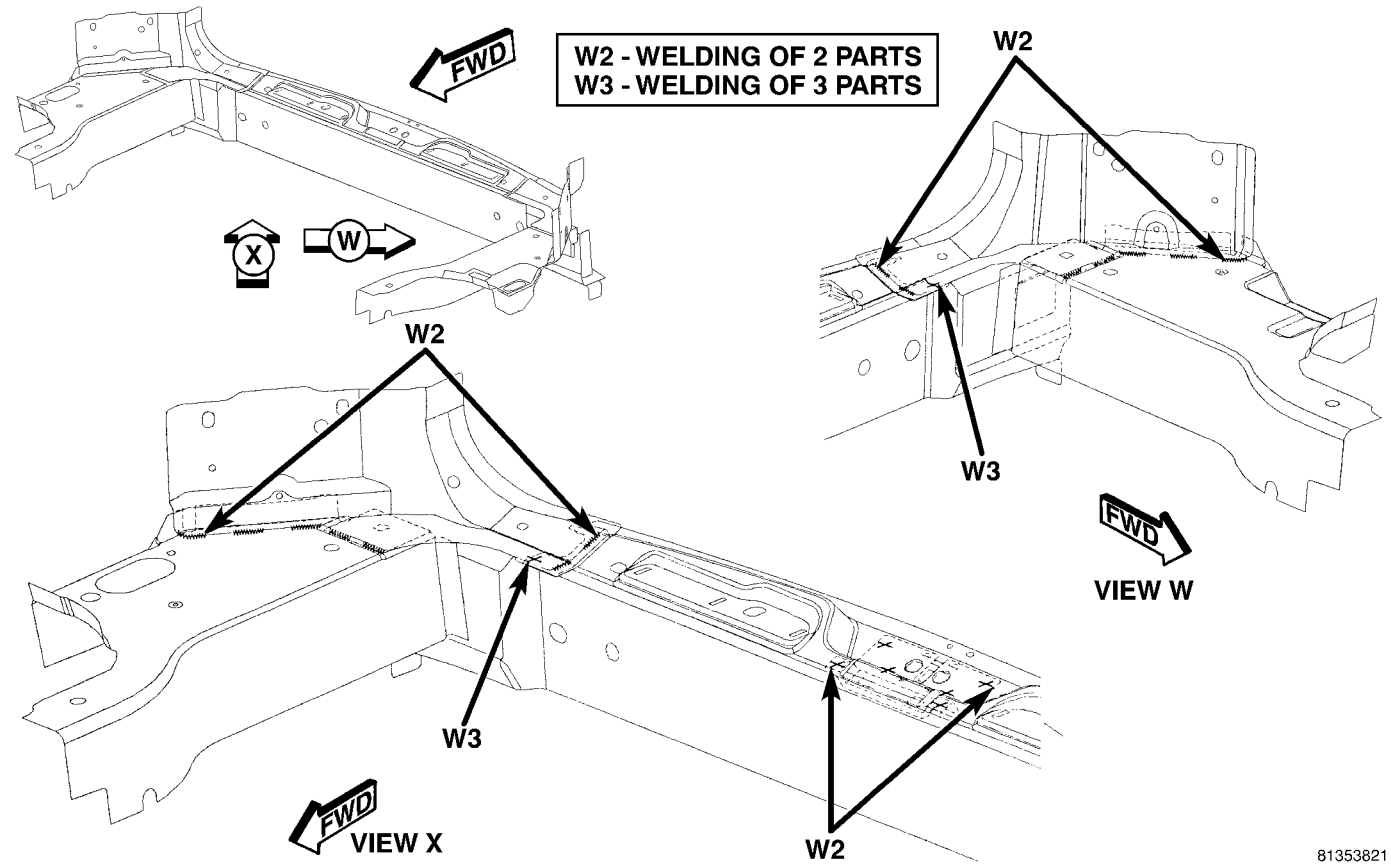

Fig. 219 MISCELLANEOUS WELDS (2 OF 2)

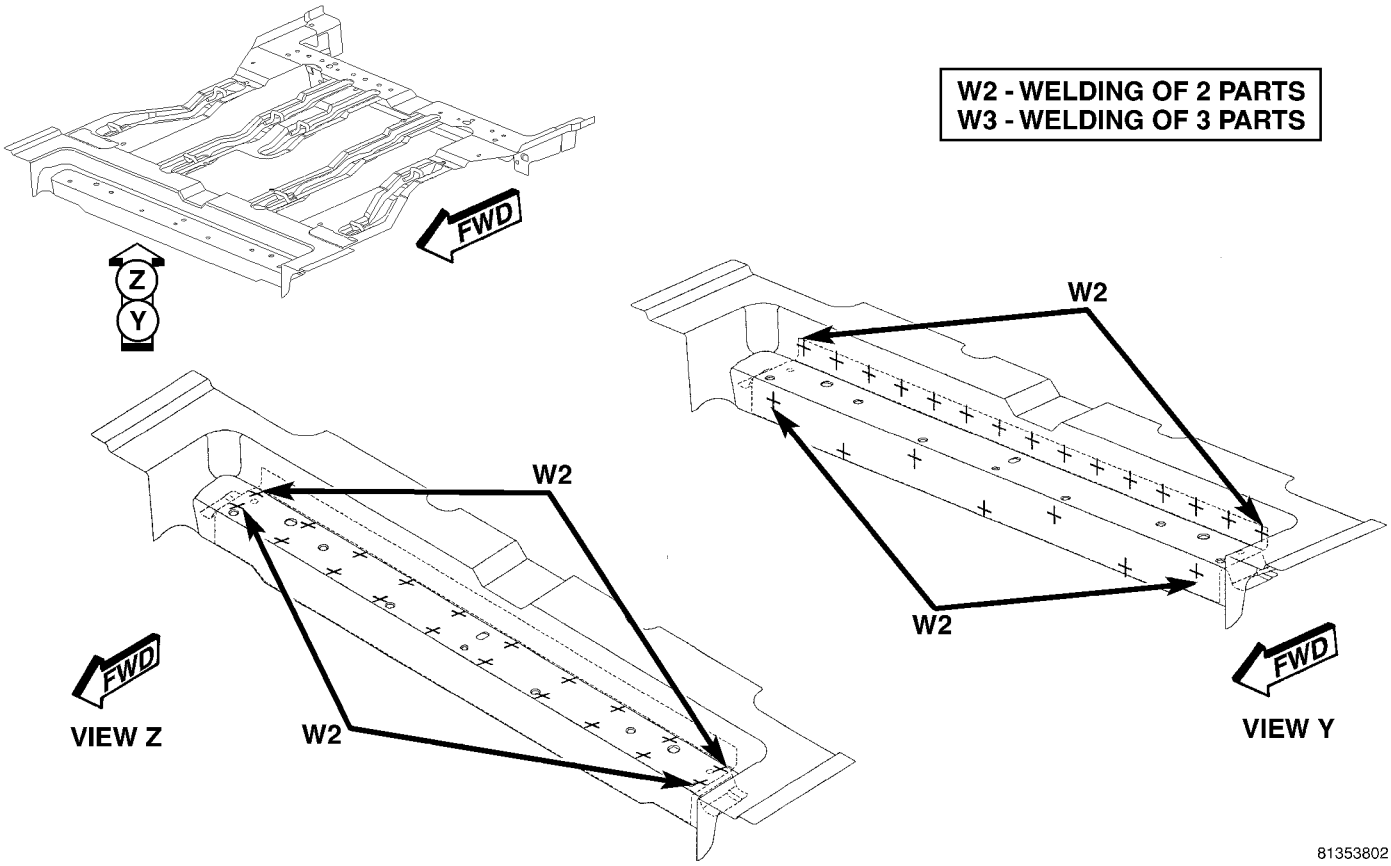

Fig. 220 UNDERBODY (1 OF 4)

WELD LOCATIONS (Continued)

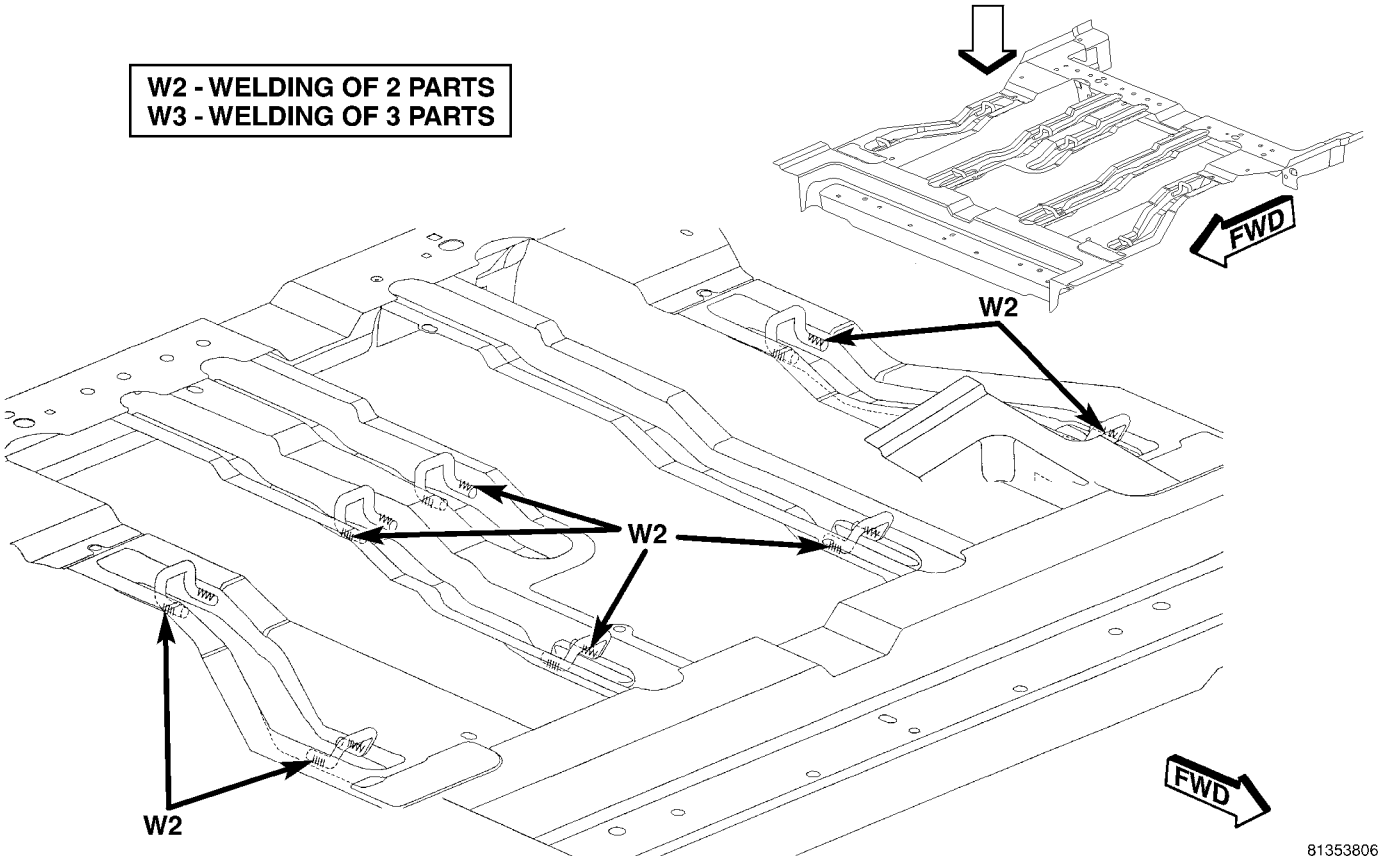

Fig. 221 UNDERBODY (2 OF 4)

WELD LOCATIONS (Continued)

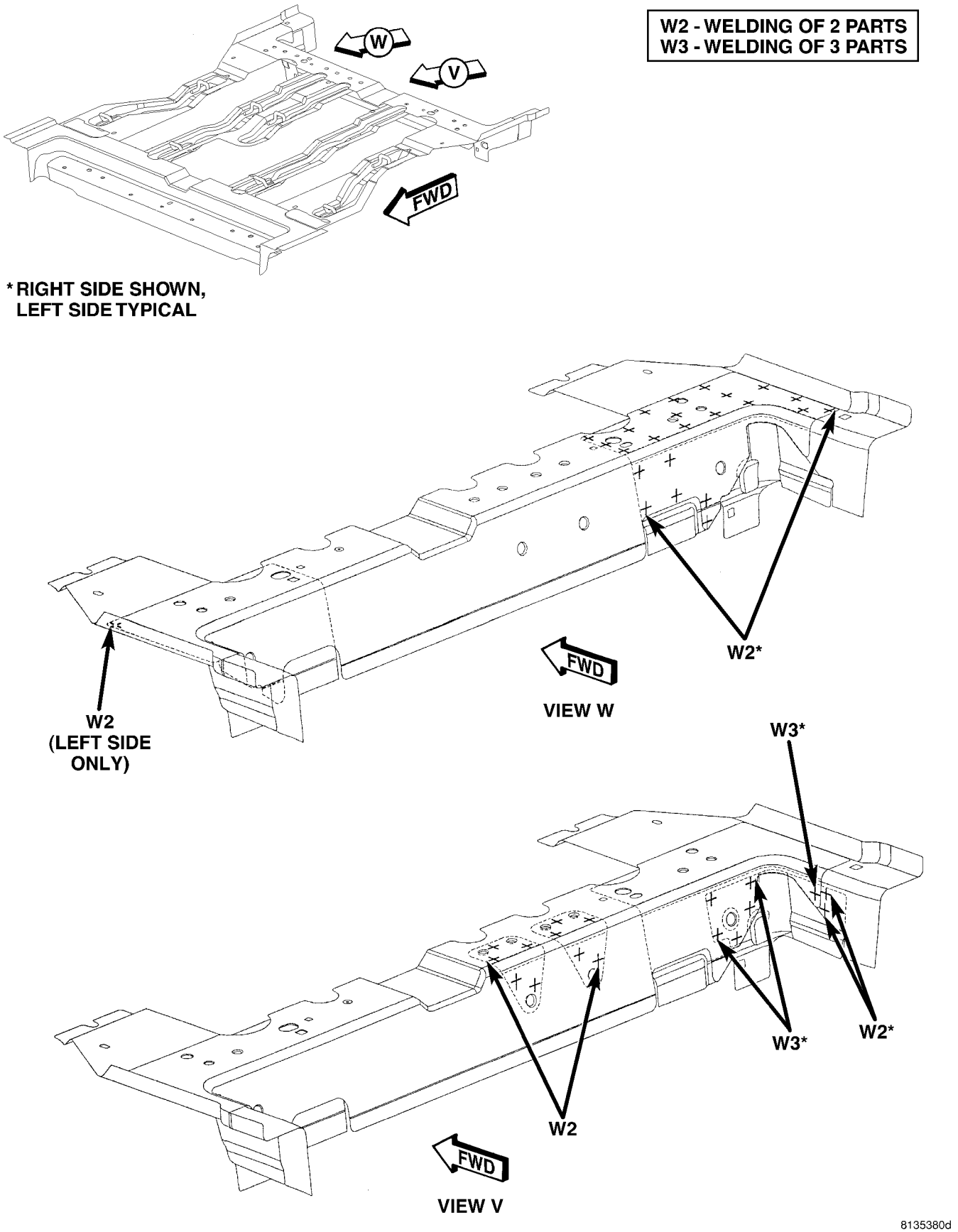

Fig. 222 UNDERBODY (3 OF 4)

WELD LOCATIONS (Continued)

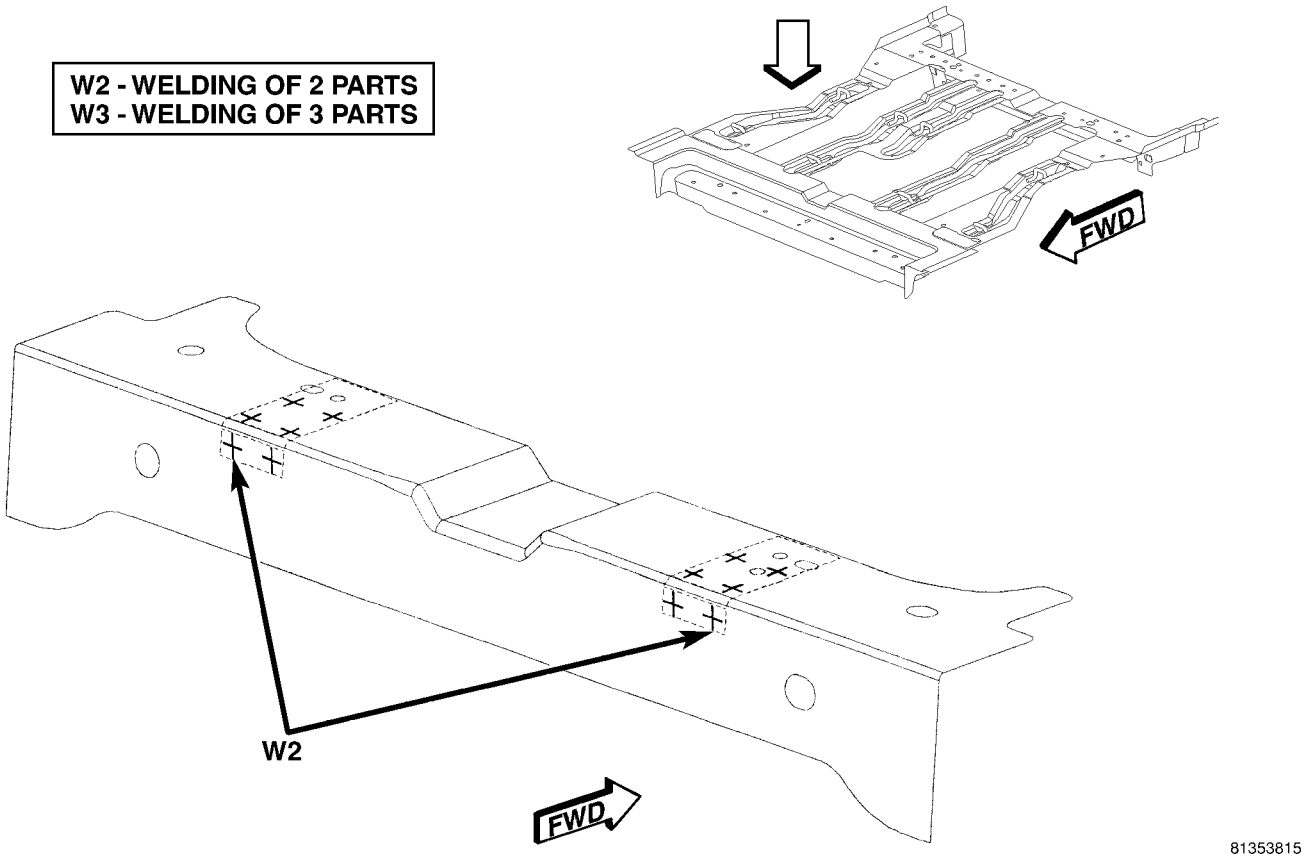

Fig. 223 UNDERBODY (4 OF 4)

WELD LOCATIONS (Continued)

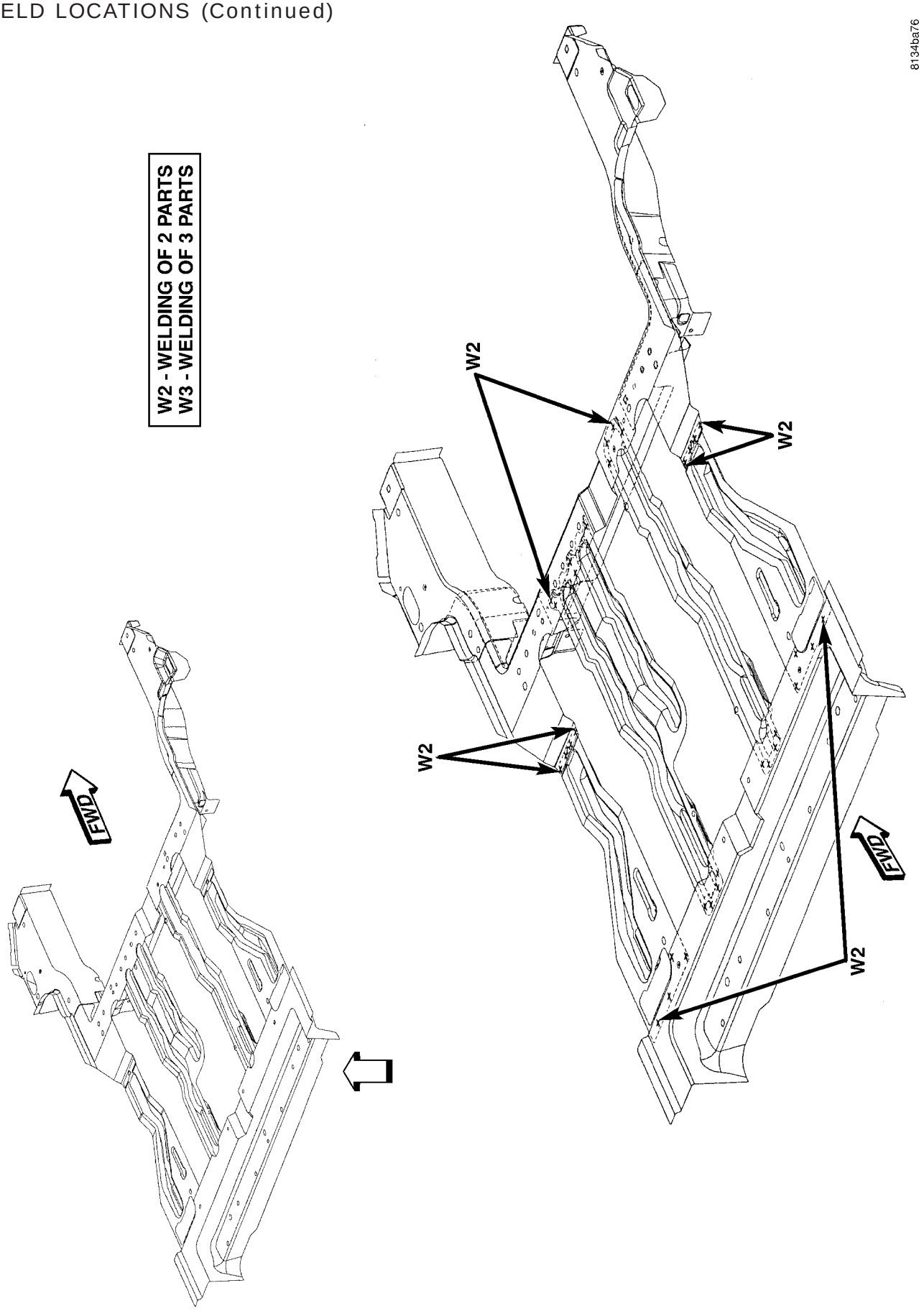

Fig. 224 UPPER LADDER (1 OF 2)

WELD LOCATIONS (Continued)

Fig. 225 UPPER LADDER (2 OF 2)

WELD LOCATIONS (Continued)

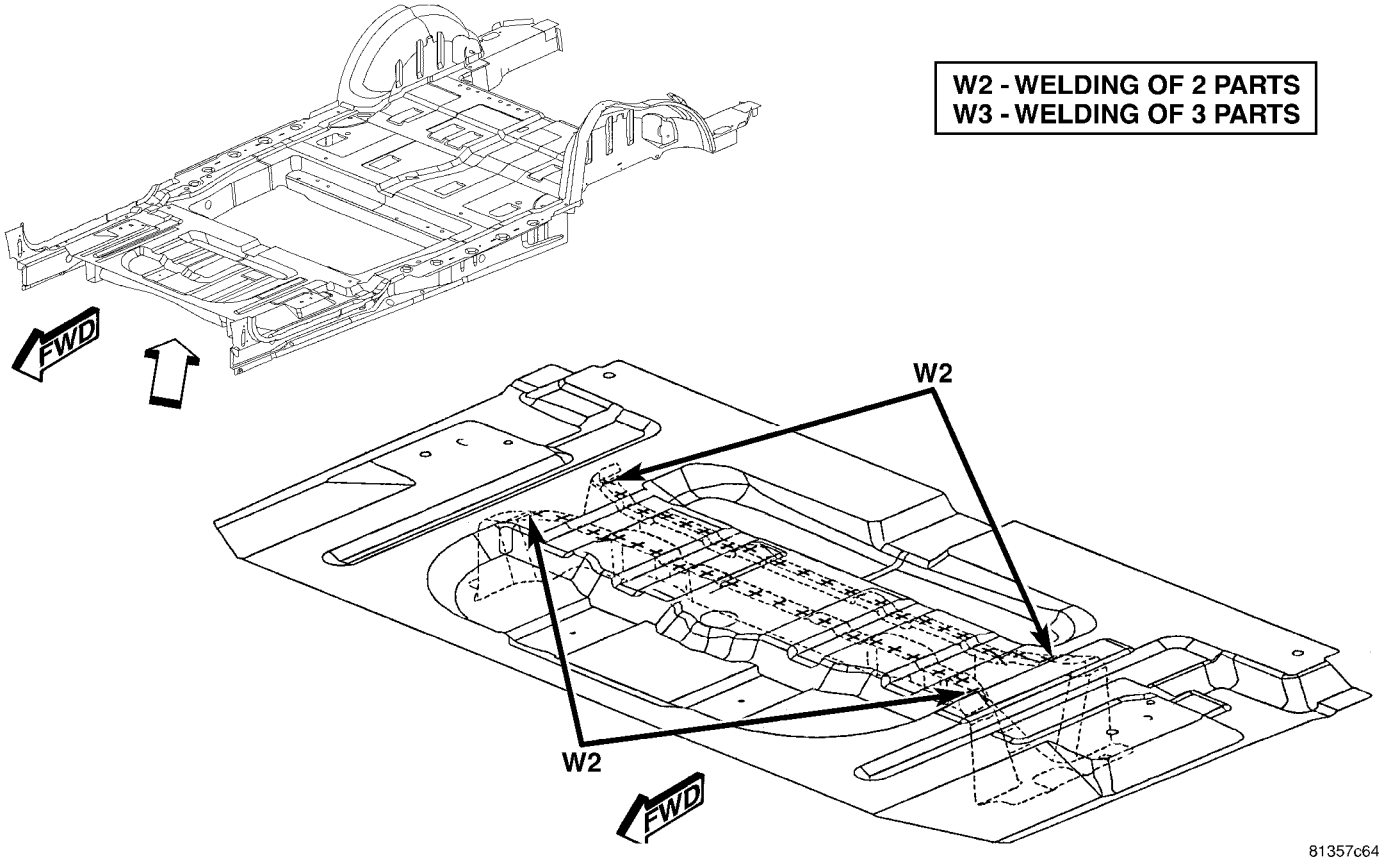

Fig. 226 UNDERBODY COMPLETE (1 OF 8)

WELD LOCATIONS (Continued)

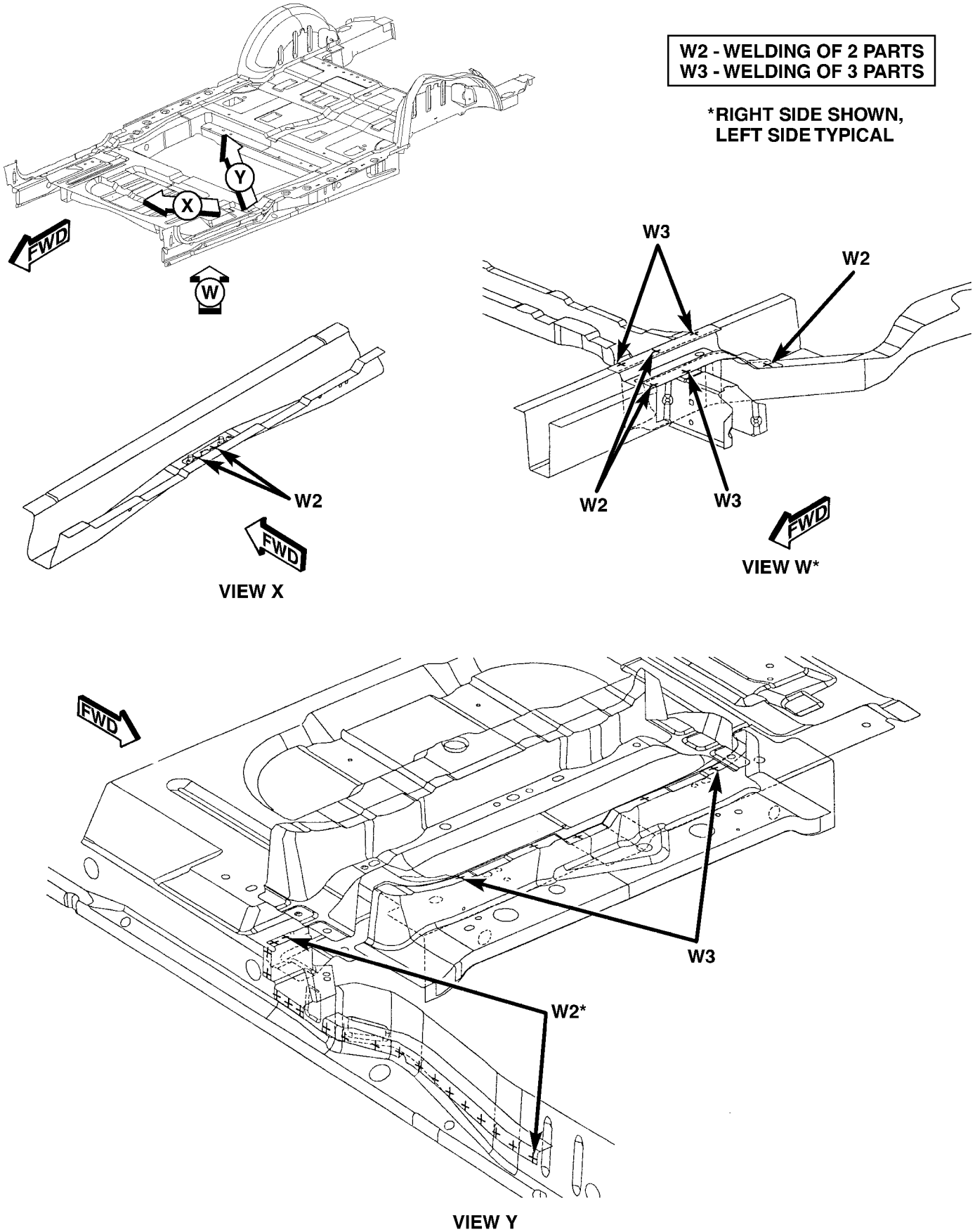

Fig. 227 UNDERBODY COMPLETE (2 OF 8)

WELD LOCATIONS (Continued)

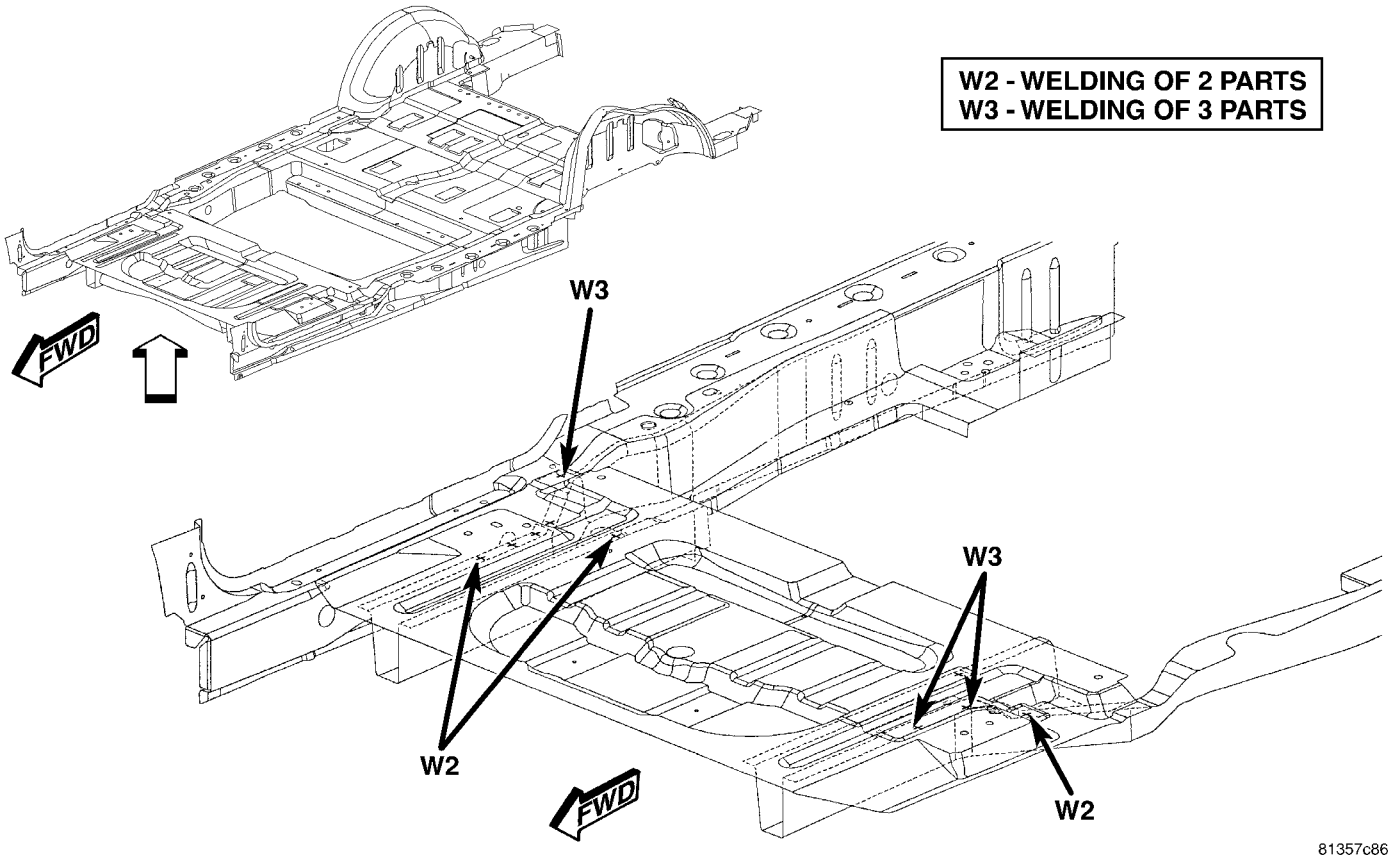

Fig. 228 UNDERBODY COMPLETE (3 OF 8)

WELD LOCATIONS (Continued)

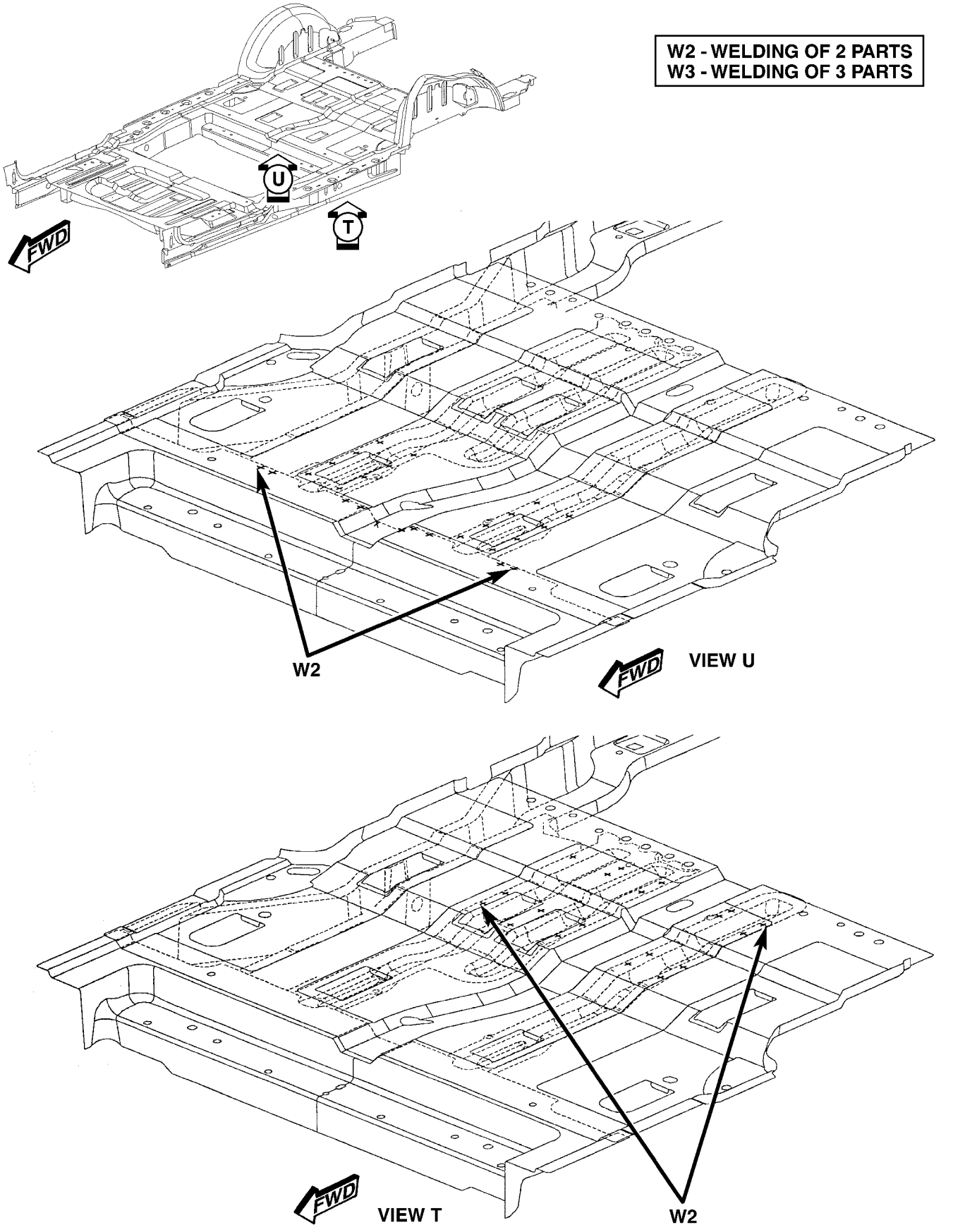

Fig. 229 UNDERBODY COMPLETE (4 OF 8)

WELD LOCATIONS (Continued)

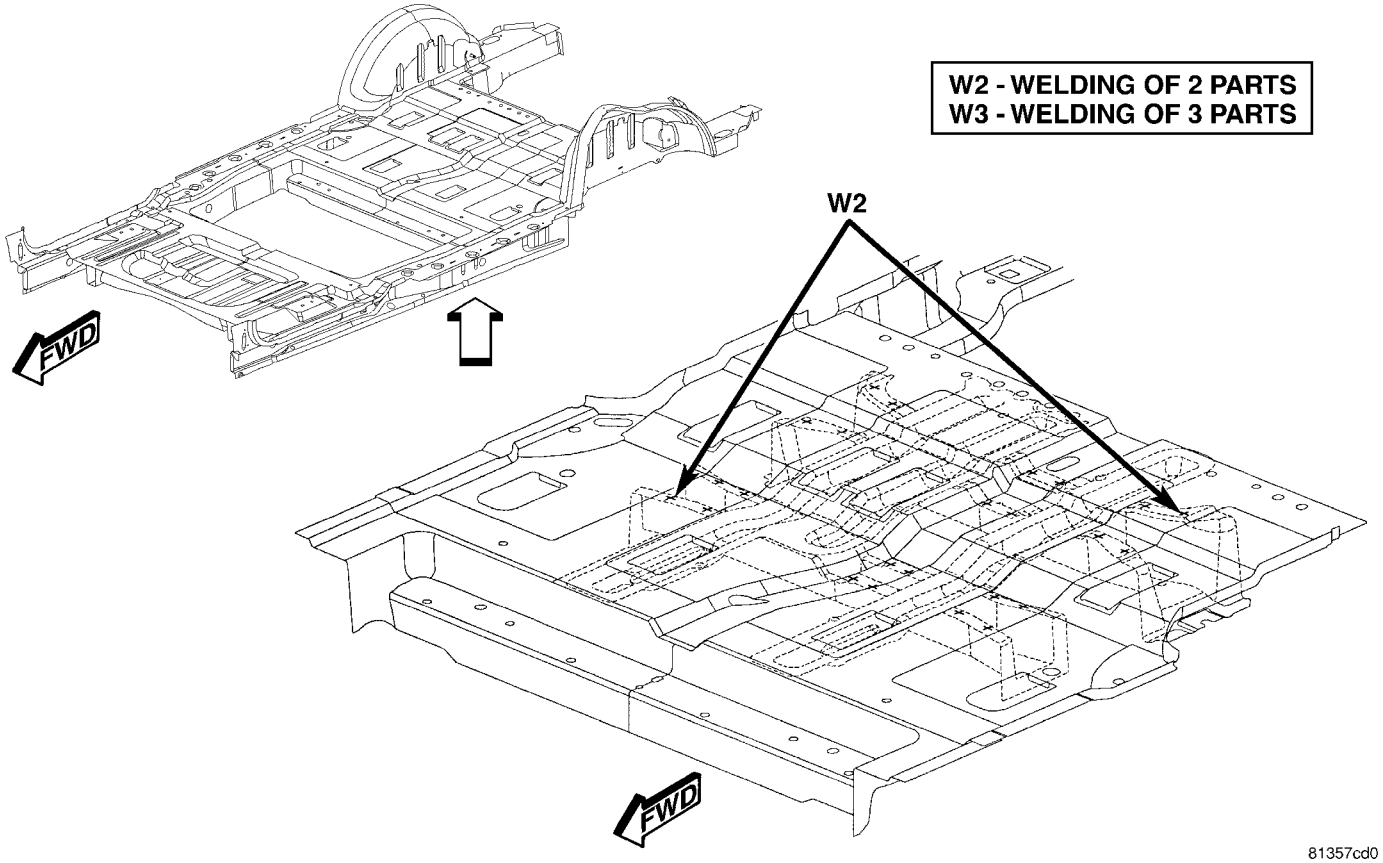

Fig. 230 UNDERBODY COMPLETE (5 OF 8)

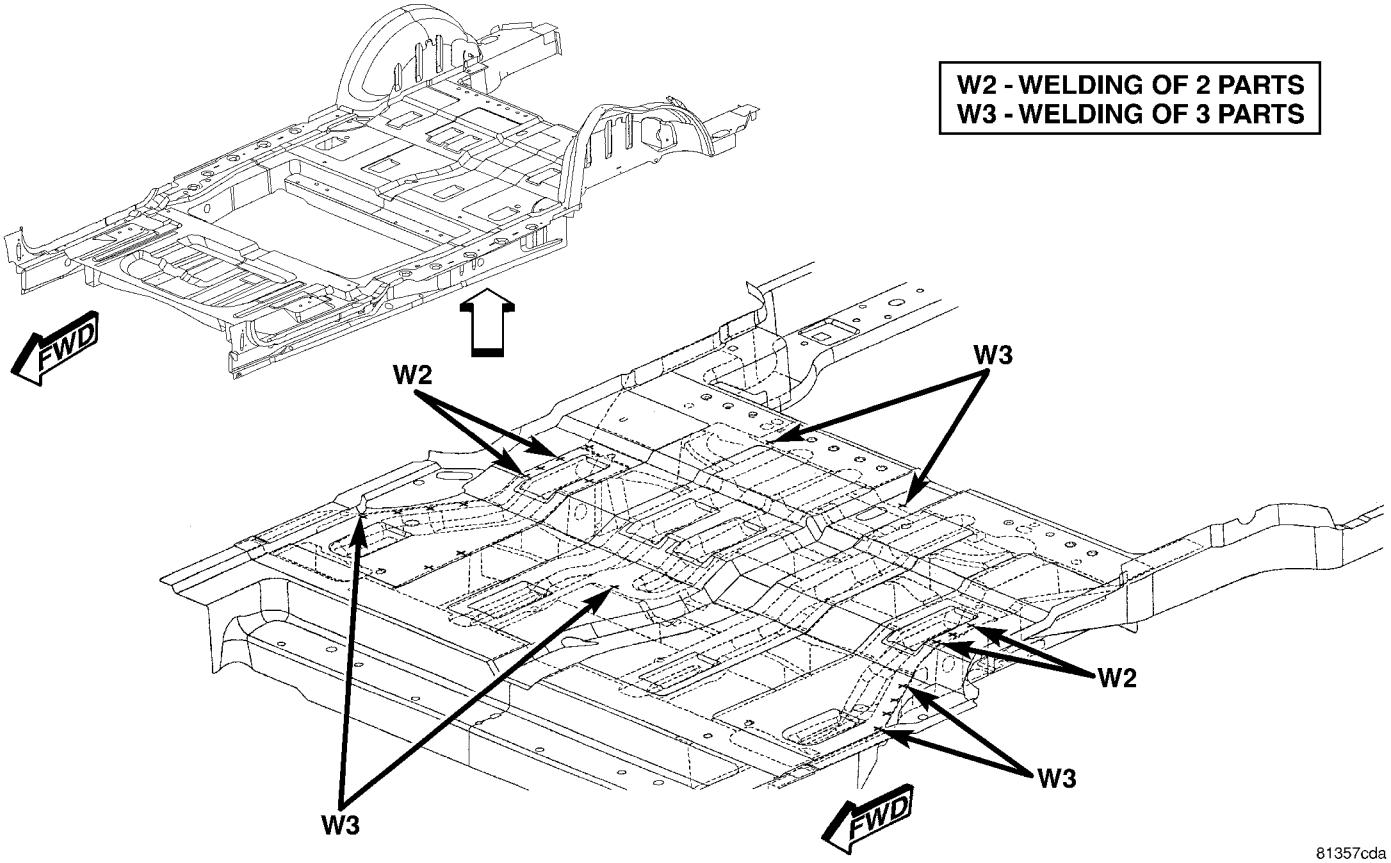

Fig. 231 UNDERBODY COMPLETE (6 OF 8)

WELD LOCATIONS (Continued)

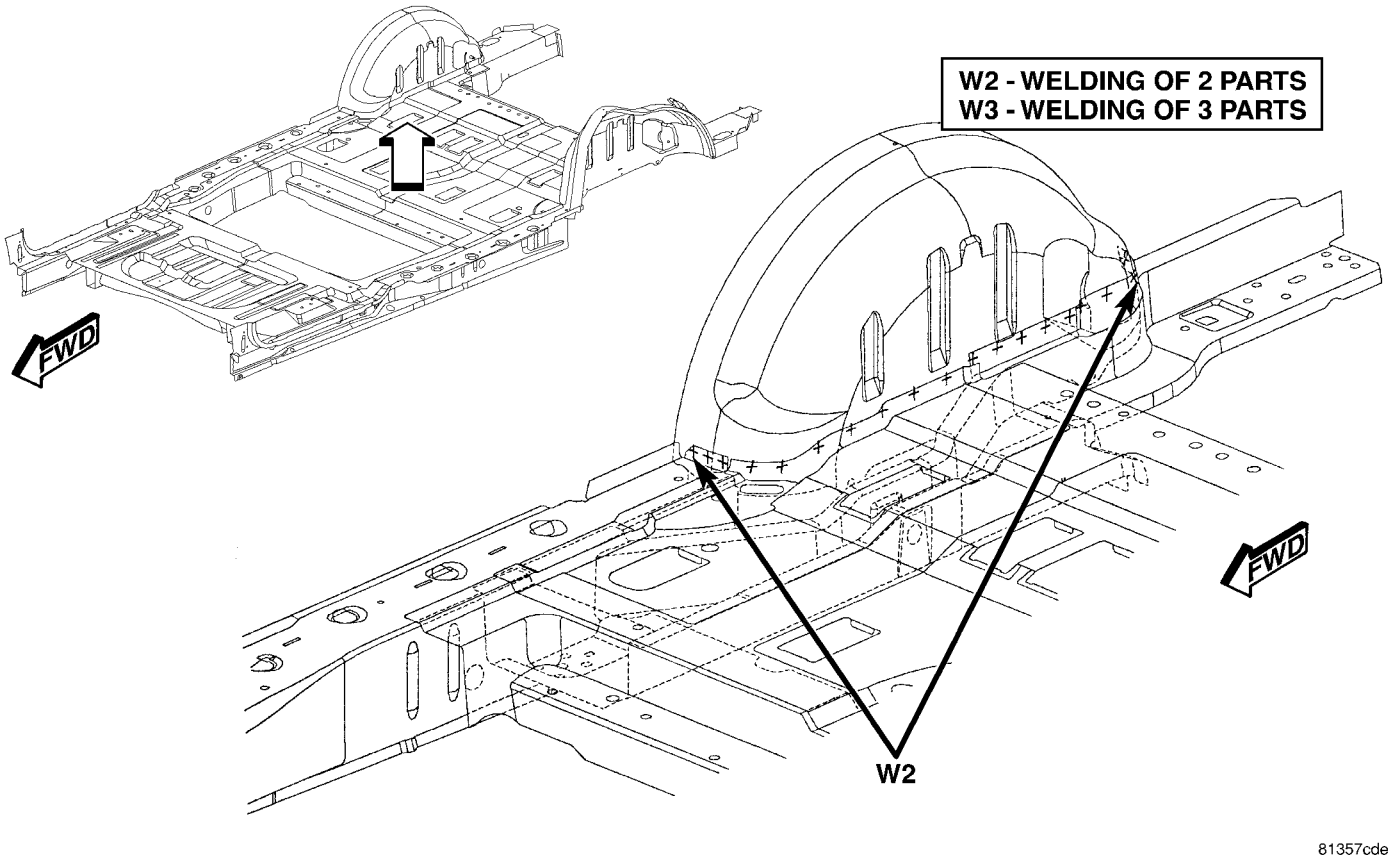

Fig. 232 UNDERBODY COMPLETE (7 OF 8)

WELD LOCATIONS (Continued)

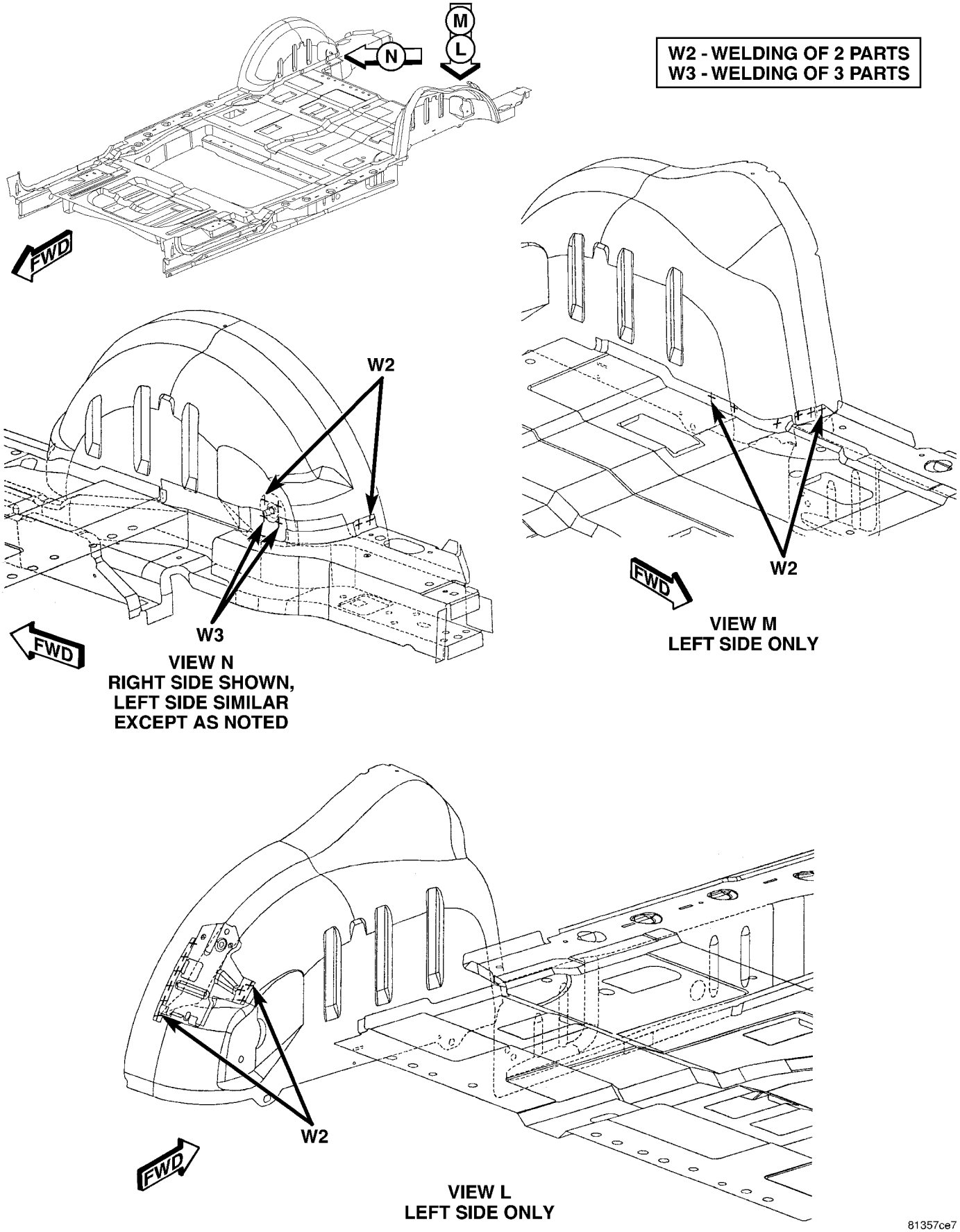

Fig. 233 UNDERBODY COMPLETE (8 OF 8)

WELD LOCATIONS (Continued)

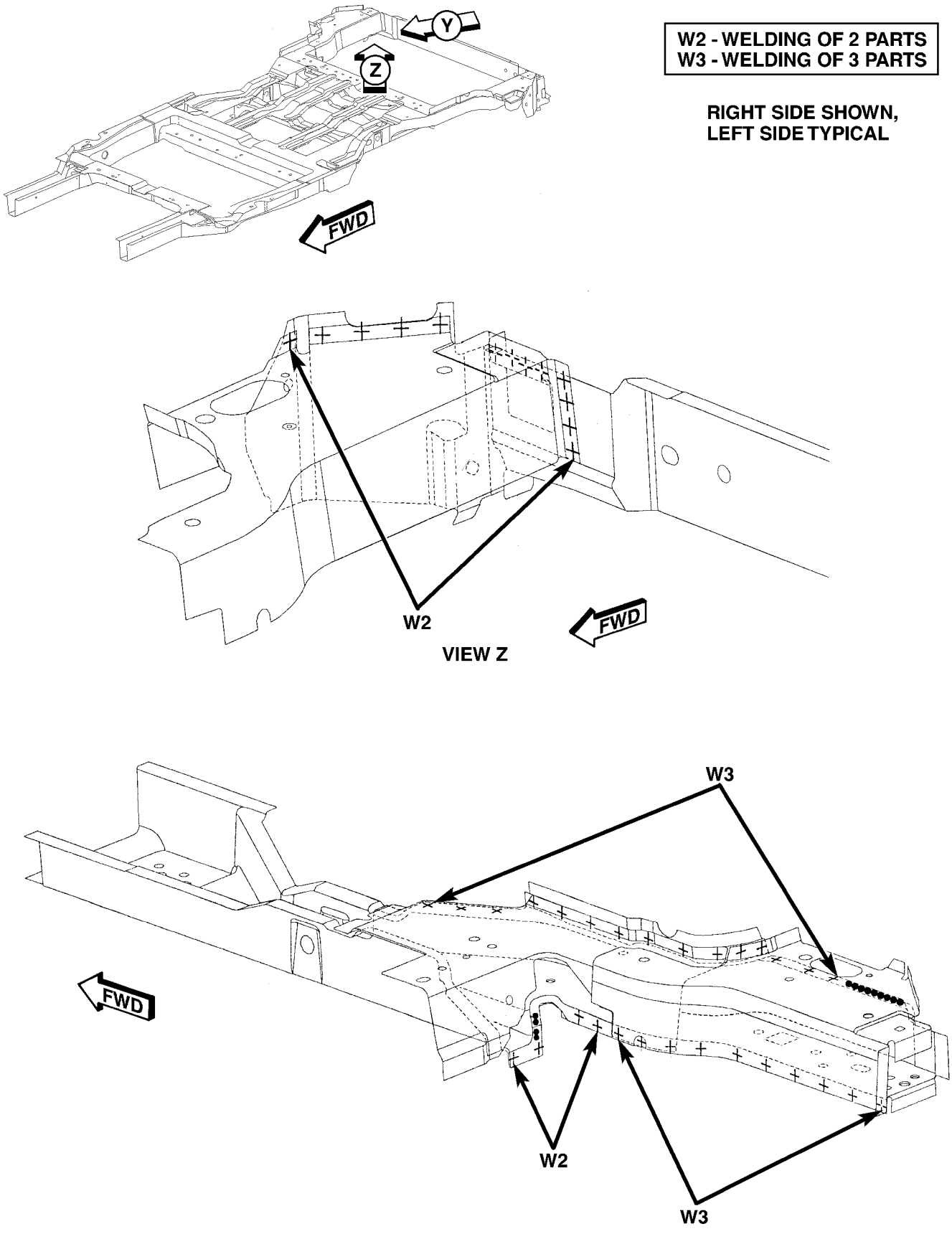

Fig. 234 LADDER COMPLETE (1 OF 6)

WELD LOCATIONS (Continued)

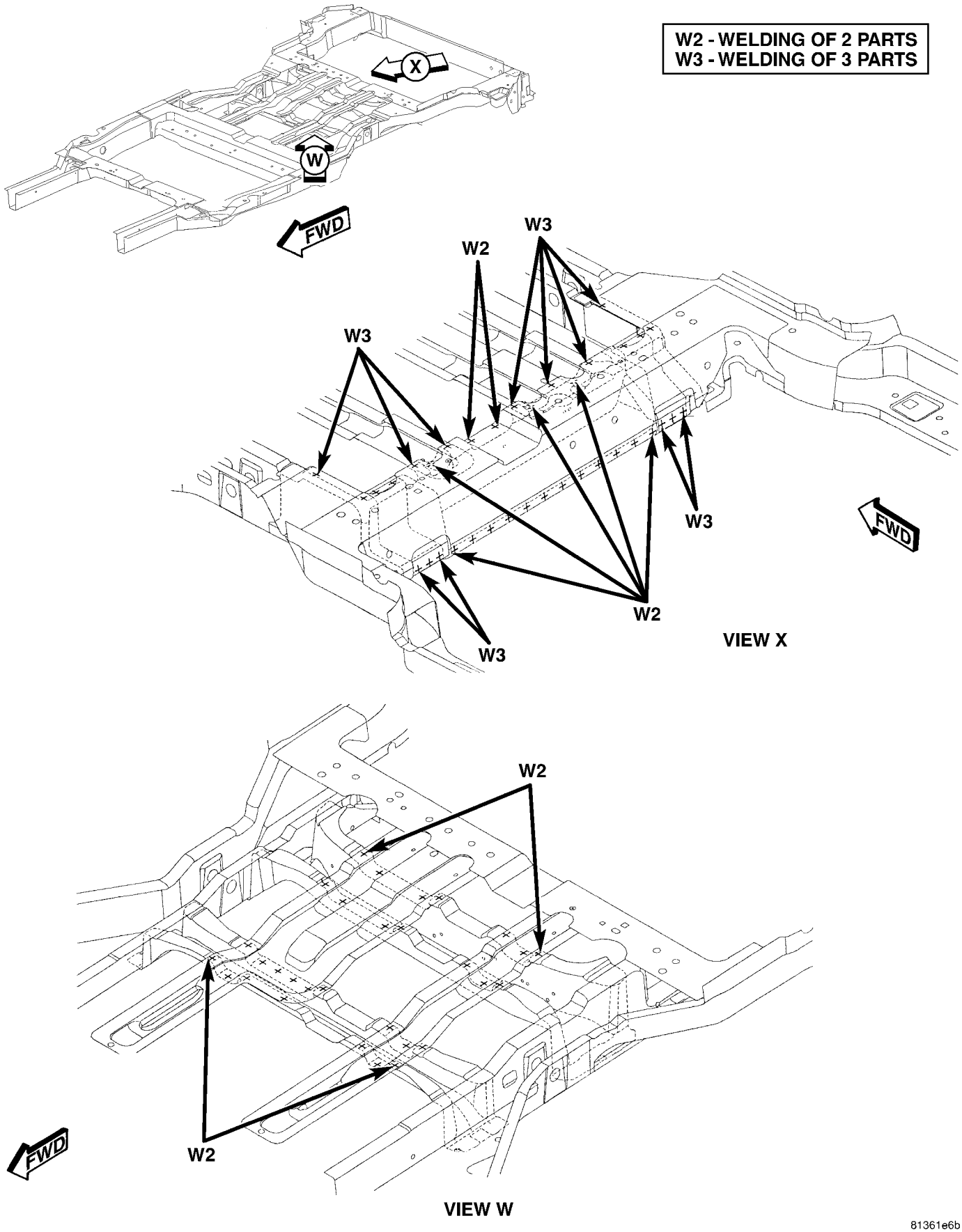

Fig. 235 LADDER COMPLETE (2 OF 6)

WELD LOCATIONS (Continued)

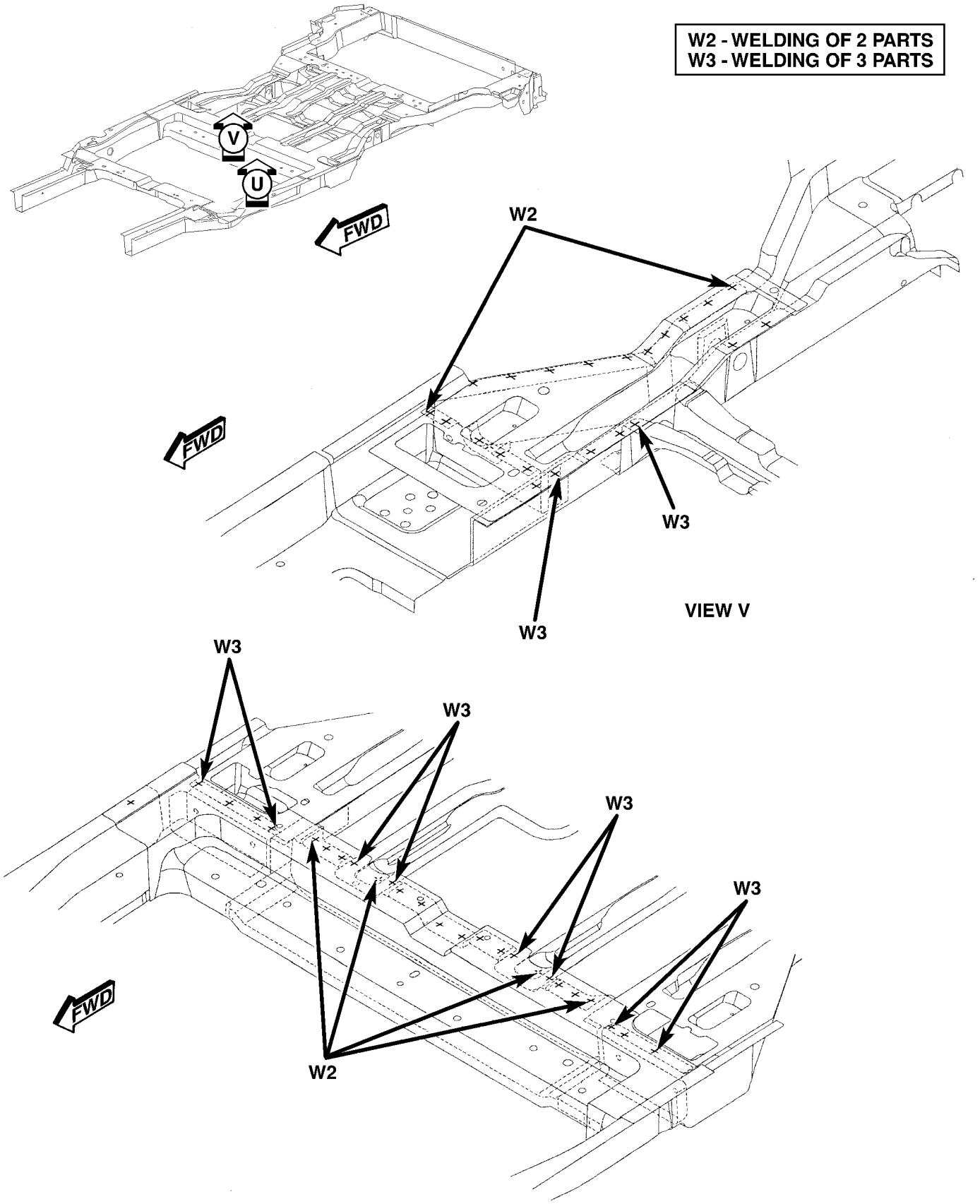

Fig. 236 LADDER COMPLETE (3 OF 6)

WELD LOCATIONS (Continued)

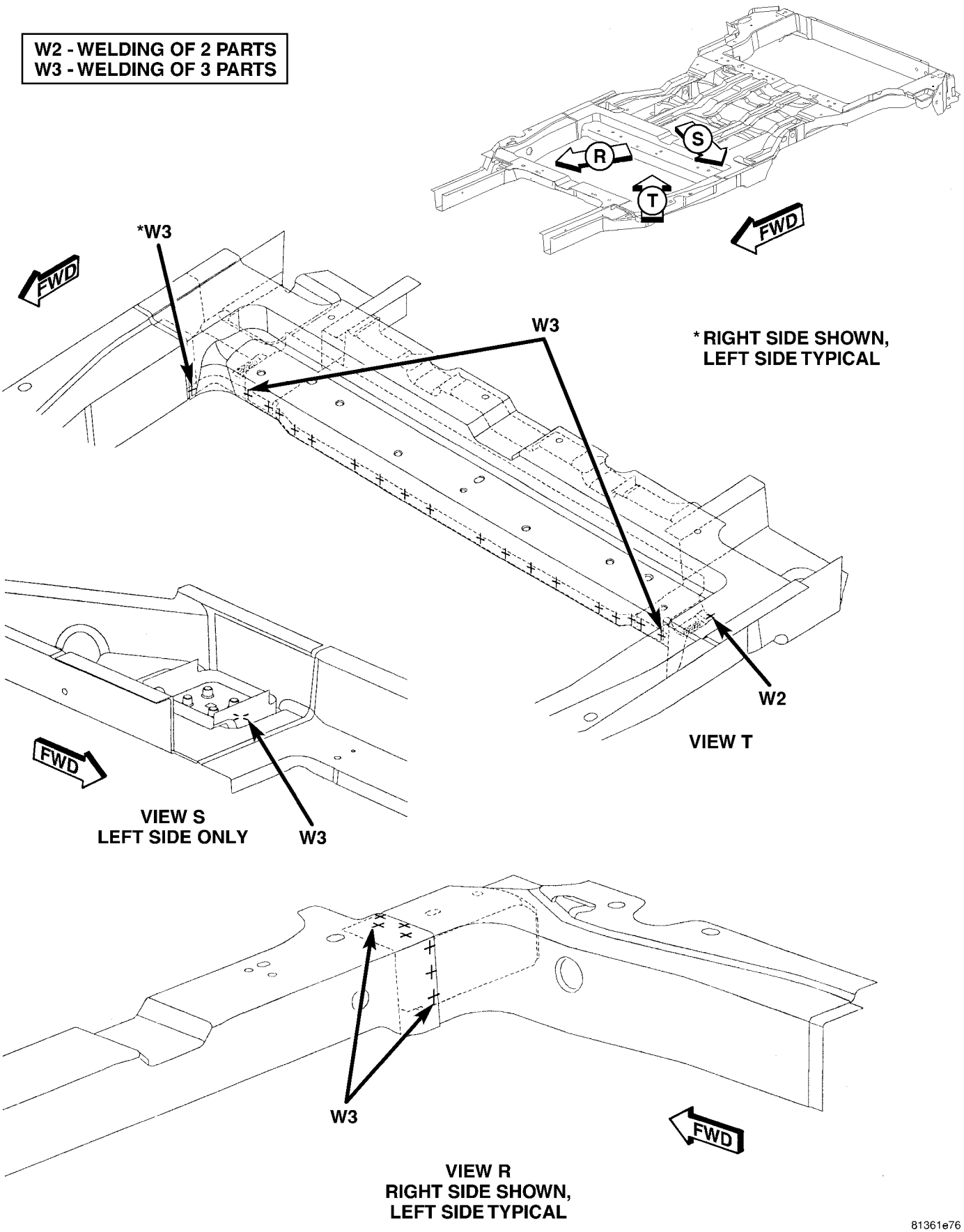

Fig. 237 LADDER COMPLETE (4 OF 6)

WELD LOCATIONS (Continued)

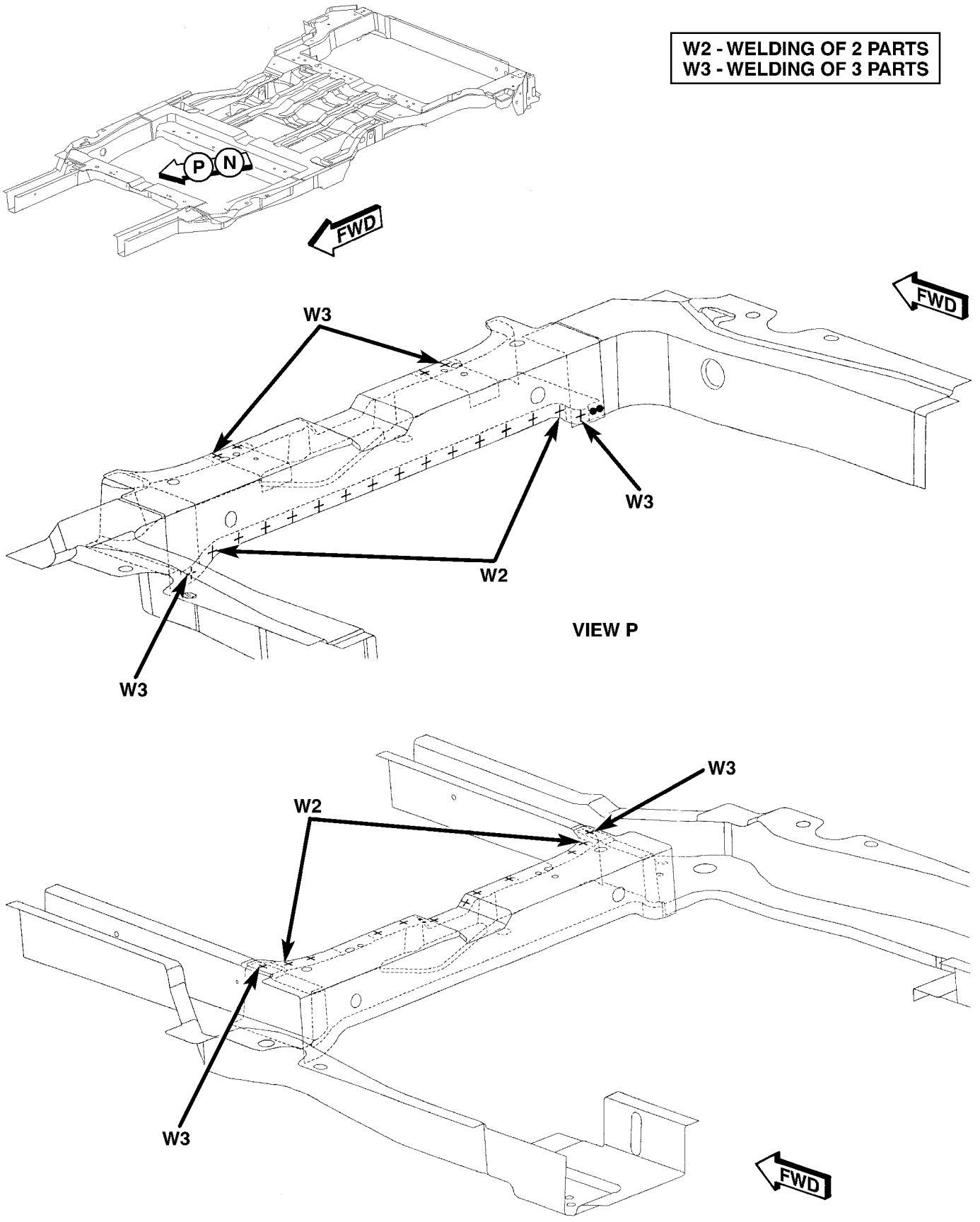

Fig. 238 LADDER COMPLETE (5 OF 6)

WELD LOCATIONS (Continued)

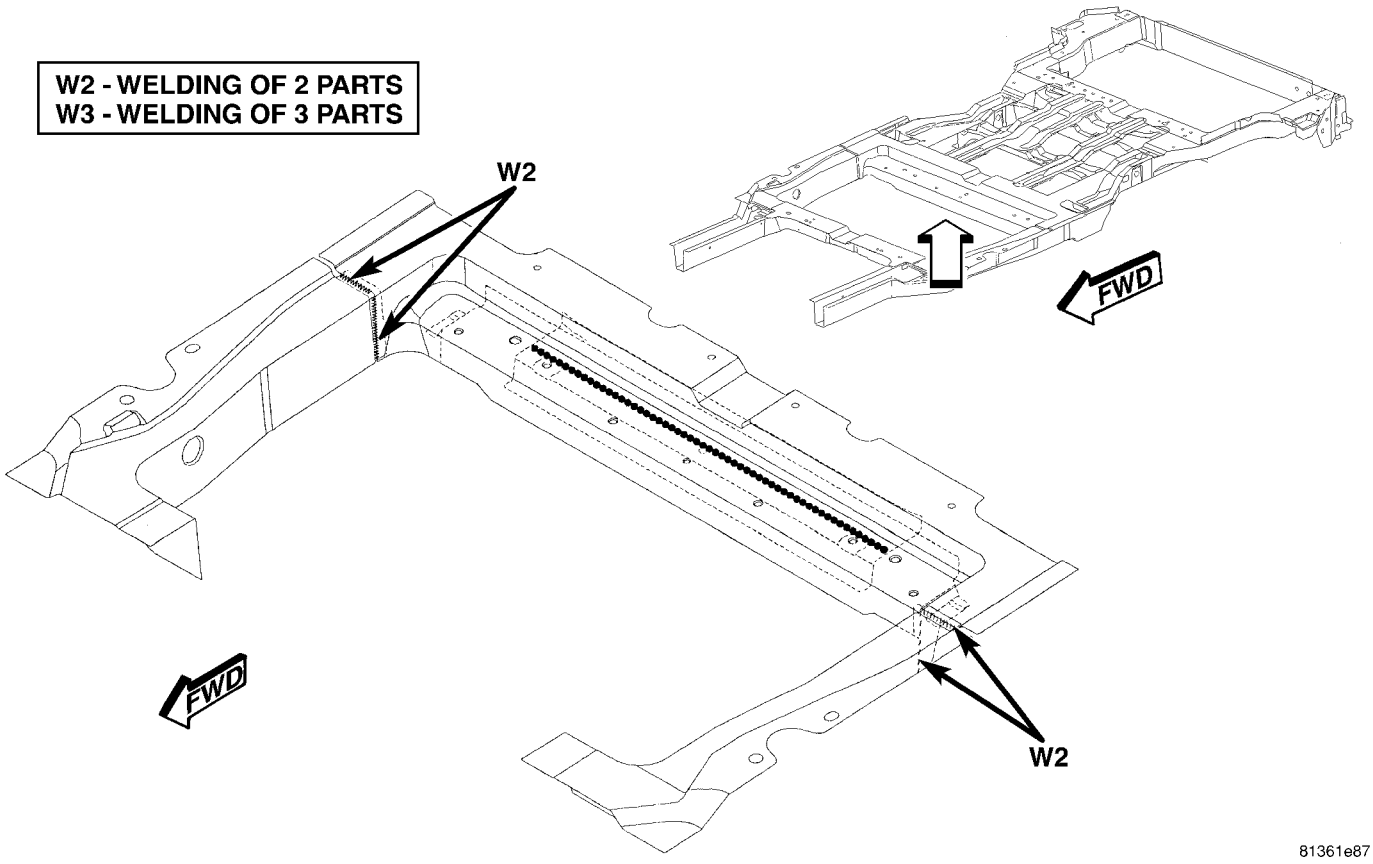

Fig. 239 LADDER COMPLETE (6 OF 6)

HEATING & AIR CONDITIONING

TABLE OF CONTENTS

page

HEATING & AIR CONDITIONING
DESCRIPTION
ENGINE COOLING SYSTEM REQUIREMENTS 1
HEATER AND AIR CONDITIONER 1
MANUAL SINGLE ZONE 2
MANUAL DUAL ZONE 2
MANUAL THREE ZONE 2
AUTOMATIC TEMPERATURE CONTROL 3
OPERATION
HEATER AND AIR CONDITIONER 4
MANUAL SINGLE ZONE 4
MANUAL DUAL ZONE 5
MANUAL THREE ZONE 5
AUTOMATIC TEMPERATURE CONTROL 5
DIAGNOSIS AND TESTING
A/C COOL DOWN TEST 6
A/C PERFORMANCE TEST 7
HEATER PERFORMANCE TEST 10
SPECIFICATIONS
A/C SYSTEM 11
CONTROLS - FRONT 13
CONTROLS - REAR 33
DISTRIBUTION - FRONT 42
DISTRIBUTION - REAR 56
PLUMBING - FRONT 64
PLUMBING - REAR 98
CABIN HEATER 113

HEATING & AIR CONDITIONING

DESCRIPTION

ENGINE COOLING SYSTEM REQUIREMENTS

To maintain the performance level of the heating, ventilation and air conditioning (HVAC) system, the engine cooling system must be properly maintained. The use of a bug screen is not recommended. Any obstructions in front of the radiator or condenser will reduce the performance of the air conditioning and engine cooling systems.

The engine cooling system includes the radiator, thermostat, radiator hoses and the engine coolant pump. Refer to Cooling for more information before opening or attempting any service to the engine cooling system.

HEATER AND AIR CONDITIONER

A manually controlled single zone type heating-air conditioning system, manually controlled dual zone type heating-air conditioning system, manually controlled three zone type heating-air conditioning system or an automatic controlled three zone type heating-air conditioning system is available on this model.

All vehicles are equipped with a common heater, ventilation and air conditioning (HVAC) housing (Fig. 1). The system combines air conditioning, heating, and ventilating capabilities in a single unit housing mounted within the passenger compartment under the instrument panel. The HVAC housing includes:

- Blower motor
- Blower motor resistor block or power module (depending on application)
- Heater core
- Evaporator coil
- Blend door and actuator
- Mode door and actuator
- Recirculation door and actuator

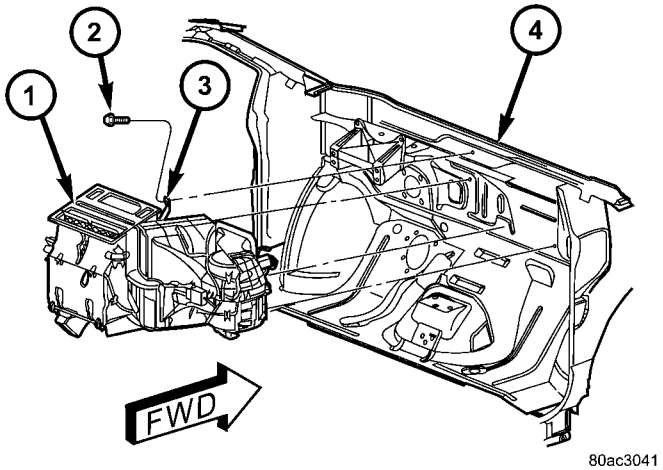

Fig. 1 HVAC Housing - LHD Shown, RHD Typical

1 - HVAC HOUSING
2 - BOLT
3 - BRACKET
4 - DASH PANEL

Based upon the system and mode selected, conditioned air can exit the HVAC housing through one or

a combination of the three main housing outlets: defrost, panel or floor. The defrost and panel outlets are located on the top of the housing and the floor outlet is located on the bottom of the housing. Once the conditioned air exits the unit housing, it is further directed through molded plastic ducts to the various outlets in the vehicle interior. These outlets and their locations are as follows:

- **Defroster Outlet** - A single large defroster outlet is located in the center of the instrument panel top cover, near the base of the windshield.
- **Side Window Demister Outlets** - There are two side window demister outlets, one is located at each outboard end of the instrument panel, near the A-pillars.
- **Panel Outlets** - There are five panel outlets in the instrument panel, one located near each outboard end of the instrument panel facing the rear of the vehicle and three located near the top of the instrument panel center bezel.
- **Front Floor Outlets** - There are two front floor outlets, one located above each side of the center of the floor panel near the dash panel.

MANUAL SINGLE ZONE

The manual single zone heating and A/C system allows one temperature setting for the entire vehicle. The full range of temperatures that the system can produce are available by rotating the temperature control located on the A/C-heater control.

The A/C-heater control and integral computer is located in the instrument panel and contains:

- a rear window defogger on/off switch. Contains an LED that illuminates to show when the function is operational.
- an air recirculation on/off switch. The Recirculate button contains an LED that illuminates to show when the function is in operation.
- an air conditioning on/off switch. The Snowflake button contains an LED that illuminates to shown when the function is in operation.
- a rotary knob for fan speed selection and turning the heater-A/C system off.
- a rotary knob for temperature control of the discharged air.
- a rotary knob for mode control.

MANUAL DUAL ZONE

The manual dual zone heating and A/C system allows completely independent side-to-side temperature control of the discharge air.

The A/C-heater control and integral computer is located in the instrument panel and contains:

- a rear window defogger on/off switch. Contains an LED that illuminates to show when the function is operational.
- slide controls for completely independent side-to-side temperature control of the discharged air. The full range of temperature that the system can produce in any mode is available on either side of the vehicle by independently positioning the slide controls on the instrument panel.
- an air recirculation on/off switch. The Recirculate button contains an LED that illuminates to show when the function is in operation.
- an air conditioning on/off switch. The Snowflake button contains an LED that illuminates to shown when the function is in operation.
- a rotary knob for fan speed selection and turning the heater-A/C system off.
- a rotary knob for mode control.

MANUAL THREE ZONE

The fully adjustable manual three zone front and rear heating and A/C system allows intermediate seat passengers the ability to regulate air temperature as well as fan speed and provides floor outlets to the rear of the right sliding door and overhead outlets at each rear outboard seating position. Primary control for the rear blower is on the front A/C-heater control. All controls are identified by ISO graphic symbols.

FRONT CONTROL PANEL

The front A/C-heater control and integral computer mounted in the instrument panel contains:

- a rear window defogger on/off switch.
- slide controls for completely independent side-to-side temperature control of the discharge air. The full range of temperature that the system can produce in any mode is available on either side of the vehicle by independently positioning the slide controls on the instrument panel.
- an air recirculation button. The Recirculate button contains an LED that illuminates to show when the function is in operation.
- an air conditioning button that allows the compressor to be turned on/off. The Snowflake button contains an LED that illuminates to shown when the function is in operation.
- a rotary knob for front fan speed selection and turning the heater-A/C system off.
- a rotary knob for rear fan speed selection.
- a rotary knob for mode control.

REAR CONTROL PANEL

The rear A/C-heater control centrally mounted in the headliner allows intermediate seat passengers to adjust rear air distribution, temperature and blower motor speed when the center knob on the front A/C-heater control is set to the Rear position. The rear A/C-heater control contains:

HEATING & AIR CONDITIONING (Continued)

- a rotary adjustment knob for temperature.
- a rotary adjustment for fan speed control.

AUTOMATIC TEMPERATURE CONTROL

Two different automatic temperature control (ATC) heating-A/C systems are available for this model depending on the market.

The Dual-Zone ATC system allows the driver and front occupants to each select individual comfort temperatures.

The Three-Zone ATC system allows both the driver and front occupants and the rear intermediate occupants to select individual comfort temperatures.

NOTE: Individual comfort temperatures are the perceived temperature level at the individual seating areas, NOT the actual passenger compartment air temperature.

The ATC system includes a particulate air filter. The filter element is the same size as the A/C evaporator to ensure ample capacity. A door at the base of the HVAC housing below the glove box provides easy access to the filter element.

The ATC computer utilizes integrated circuitry and information carried on the programmable communications interface (PCI) data bus network to monitor many sensors and switch inputs throughout the vehicle. In response to those inputs, the internal circuitry and programming of the ATC computer allow it to control electronic functions and features of the ATC system. The inputs to the ATC computer are:

- **Vehicle Speed/Engine RPM** – The ATC computer monitors engine rpm, vehicle speed and manifold absolute pressure information from the powertrain control module (PCM).
- **Coolant Temperature** – ATC computer monitors coolant temperature received from the PCM and converts it to degrees Fahrenheit.
- **Ambient Temperature** – ATC computer monitors ambient temperature from the compass mini trip computer (CMTC) and converts it to degrees Fahrenheit.
- **Engine Miscellaneous Sensor Status** – ATC computer monitors A/C disable information from the PCM.
- **Refrigerant Pressure** – ATC computer monitors barometric pressure, intake air temperature, high side pressure and methanol content as broadcast by the PCM.
- **Door Ajar Status** – The ATC computer monitors driver front door, passenger front door, left rear door, right rear door and liftgate ajar information, as identified by the body control module (BCM), to determine if all in-car temperatures should be maintained.
- **Dimming** – The ATC computer monitors dimming status from the BCM to determine the required level of brightness and will dim accordingly.
- **Vehicle Odometer** – The ATC computer monitors the vehicle odometer information from the BCM to prevent flashing the vacuum-flourescent (VF) digital display icons if the manual motor calibration or manual cool down tests have failed. Flashing of the display icons will cease when the vehicle odometer is greater than 3 miles.
- **English/Metric** – The ATC computer monitors the English/Metric information broadcast by the CMTC. The set temp displays for both the front and rear control heads will be set accordingly.
- **Vehicle Identification Number** – The ATC computer monitors the last eight characters of the VIN broadcast by the PCM and compares it to the information stored in EEPROM. If it is different, the new number will be stored over the old one and a motor calibration shall be initiated.
- **A/C System Information** – The ATC computer will send a message for evaporator temperature too low, fan blower relay status, evaporator sensor failure, rear window defogger relay and A/C select.

FRONT CONTROL PANEL

The front A/C-heater control and integral computer is mounted in the instrument panel and contains:

- a power button which allows the system to be completely turned off. The display is blank when the system is off.
- a rocker switch that selects a cool-down rate. LO-AUTO or HI-AUTO are displayed when the system is in automatic operation.
- three rocker switches that select comfort temperatures from 15° to 30° C (59° to 85° F), which are shown in the VF digital display. If the set temp is 15° C (59° F) and the down button is pressed, the set temp value will become 13° C (55° F) but the display will show LO. If the set temp is 29° C (85° F) and the up button is pressed, the set temp value will become 32° C (90° F) but the display will show HIGH. Temperatures can be displayed in either metric or Fahrenheit, which is controlled from the overhead console.
- an air conditioning button that allows the compressor to be turned off. A Snowflake symbol is illuminated when air conditioning is on, whether under manual or automatic control.
- an air recirculation button. A Recirculation symbol appears in the display when the button is pressed, or when the system exceeds 80 percent recirculated air under automatic control due to high air conditioning demand.
- a rear window defogger on/off switch. A graphic symbol shows when the defroster is on.

• a rotary knob for front fan speed selection can override the automatic controls. LEDs surrounding the knob show the current setting.

• a rotary knob for control of the rear system (Three-Zone ATC system only).

• a rotary knob for mode control can override the automatic controls. LEDs surrounding the knob show the current setting.

• computer logic which remembers the settings of the controls when the ignition is turned off and retains those settings after a restart. If the system is off when the ignition is turned off it will be off when the engine is restarted, etc.

• computer logic which provides variable air recirculation under high temperature and humidity conditions. Because recirculation is generally accompanied by increased fan noise, the proportion of recirculated to outside air gradually approaches full recirculation over a broad temperature range.

• computer logic which enables additional heat for diesel equipped vehicles by using a supplemental engine coolant heater.

REAR CONTROL PANEL

The Three-Zone ATC sytem utilizes a rear control panel centrally mounted on the headliner which includes a VF digital display, a rocker control for temperature and rotary controls for adjustment of mode and fan speed of the rear heating-A/C system by intermediate seat passengers.

OPERATION

HEATER AND AIR CONDITIONER

The heating and air conditioning systems pulls outside (ambient) air through the cowl opening at the base of the windshield and into the plenum chamber above the heating, ventilation and air conditioning (HVAC) housing, then through the evaporator coil. Air flow can be directed either through or around the heater core by adjusting the blend door with the temperature control knob on the A/C-heater control located on instrument panel. The air flow can then be directed out from the panel, floor and defrost outlets in various combinations using the mode control knob located on the A/C-heater control. Air flow velocity can be adjusted with the blower speed selector located on the A/C-heater control.

NOTE: It is important to keep the air intake opening clear of debris. Leaf particles and other debris that is small enough to pass through the cowl opening screen can accumulate within the HVAC housing. The closed, warm, damp and dark environment created within the housing is ideal for the growth of certain molds, mildews and other fungi. Any accumulation of decaying plant matter provides an additional food source for fungal spores, which enter the housing with the fresh intake-air. Excess debris, as well as objectionable odors created by decaying plant matter and growing fungi can be discharged into the passenger compartment during heater-A/C operation if the air intake opening is not kept clear of debris.

The heater and air conditioning system is a blend-air type system. In a blend-air system, a blend door controls the amount of conditioned air that is allowed to flow through, or around, the heater core. The temperature control knob determines the discharge air temperature by actuating an electric motor, which operates the blend door. This allows an almost immediate control of the output air temperature of the system.

On all models, the outside air intake can be shut off by pressing the Recirculation button on the A/C-heater control. This will operate a electric actuated recirculation air door that closes off the outside fresh air intake and recirculates the air that is already inside the vehicle.

The air conditioning compressor can be engaged in any mode by pressing the snowflake, A/C on/off button. It can also be engaged by placing the mode control in the mix to defrost positions. This will remove heat and humidity from the air before it is directed through or around the heater core. The mode control knob on the A/C-heater control is used to also direct the conditioned air to the selected system outlets. The mode control switch uses an electric motor to control the mode doors.

MANUAL SINGLE ZONE

• The temperature control knob enables continuously variable proportioning of the conditioned air.

• The mode control knob enables continuously variable proportioning of air flow between modes and has detents adjacent to each icon.

• The blower control provides four separate speeds and an Off position.

• When the heater-A/C system is off, the HVAC computer closes the recirculation door to prevent outside air from entering the passenger compartment.

• Interior air may be recirculated to speed up heating or cooling in all modes except defrost and mix by pressing the Recirculate button on the A/C-heater control.

• To reduce humidity for rapid defogging, the A/C compressor runs automatically in modes from “mix” to full defrost when outside temperatures are above freezing.

• Air conditioning is available in any mode by pressing the snowflake, A/C on/off button.

HEATING & AIR CONDITIONING (Continued)

MANUAL DUAL ZONE

- The two slide controls enable continuously variable proportioning of the conditioned air.
- The mode control knob enables continuously variable proportioning of air flow between modes and has detents adjacent to each icon.
- The blower control provides four separate speeds and an Off position.
- When the heater-A/C system is off, the HVAC computer closes the recirculation door to prevent outside air from entering the passenger compartment.
- Interior air may be recirculated to speed up heating or cooling in all modes except defrost and mix by pressing the Recirculate button on the A/C-heater control.
- To reduce humidity for rapid defogging, the A/C compressor runs automatically in modes from “mix” to full defrost when outside temperatures are above freezing.
- Air conditioning is available in any mode by pressing the snowflake, A/C on/off button.

MANUAL THREE ZONE

FRONT CONTROL PANEL

- Primary control of the rear heater-A/C system is on the instrument panel. This control allows the driver to set the rear compartment fan speed, to turn the rear heater-A/C system off, or to give control to the intermediate seat occupants by switching to the Rear position. When the rear heater-A/C system is controlled from the instrument panel, rear air temperature is based on the driver-side temperature control position, and the mode (floor or overhead air) is based on the front control’s mode position.
- The mode control knob enables continuously variable proportioning of air flow between modes but has detents adjacent to each icon.
- The blower control provides four separate speeds and an Off position. When the heater-A/C system is off, the HVAC computer closes the recirculation door to prevent outside air from entering the passenger compartment.
- Interior air may be recirculated to speed up heating or cooling in all modes except defrost and mix by pressing the Recirculate button on the control panel.
- To reduce humidity for rapid defogging the A/C compressor runs automatically in modes from “mix’ to full defrost when outside temperatures are above freezing.
- Air conditioning is available in any mode by pressing the snowflake, A/C on/off, button.

REAR CONTROL PANEL

With the rear control active, temperature selection dictates the air distribution mode (floor or overhead air) of the rear unit: a cool temperature setting directs flow to the overhead outlets and a warm temperature setting to the floor.

AUTOMATIC TEMPERATURE CONTROL

Comfort temperature or perceived temperature is affected by air flow, sun levels on exposed skin, etc. The air temperature may be higher or lower than the comfort temperature. The automatic temperature control (ATC) system uses two infrared sensors in the instrument panel center stack to measure the temperature of the front occupants in order determine their comfort level relative to their selected comfort temperature. The integral HVAC computer adjusts temperature and air flow rates to maintain the customer-perceived comfort temperatures. The air temperature in the passenger compartment may be slightly higher or lower than the comfort temperature at any time. For instance, on sunny summer days the air flow will probably be cooler than the comfort temperature; on cold or cloudy days and at night it will probably be slightly warmer.

The Three-Zone ATC system uses the infrared sensors located in the instrument panel center stack along with an offset calibration strategy to meet the comfort requirements of the rear seat occupants.

FRONT CONTROL PANEL

- **AUTO HI/LO** – This system features two sets of automatic control logic that allow either a rapid cool-down rate or a somewhat slower cool-down rate with less fan noise. HI-AUTO controls the system to reach its assigned temperature quickly with a higher fan speed. LO-AUTO controls the system to reach its assigned temperature somewhat slower with less fan noise. Both modes will automatically engage auto recirculation.
- **DEFROST** – The defrost function must be manually selected to direct air flow to the windshield to remove fog or ice. The ATC system cannot automatically sense the presence of fog or ice on the windshield.
- **RECIRC** – The RECIRC button will close the air inlet door. If the system is in auto recirc (indicator being displayed automatically), pressing the manual recirc button will disable the auto recirc function until one of the auto keys are pressed or the ignition is cycled. If Auto HI/LO is pressed while manual recirc is active, manual recirc will be deactivated.
- **REAR WINDOW DEFOGGER** – Pushing the button sends a PCI bus message to the intelligent power module which controls the rear window defogger and side view mirror (if equipped) circuitry. The

defogger function will be active for 10 minutes and can be turned off by a switch press. The defogger will function while the control is in the ON mode.

- **FAN/MODE** – The Fan and Mode knobs have 17 manual selectable positions. Manually changing either of the rotary knobs for mode or fan speed settings makes control of that blower motor manual. If only one is changed manually, the other remains under automatic control. Pressing the HI-AUTO/LO-AUTO rocker switch restores full automatic control.
- **BLOWER DELAY TIMER** – The word DELAY is displayed at start-up to signify that the system is waiting so that cold air will not be blowing. This tells the operator that it is unnecessary to turn the system off, raise the temperature setting or turn the fan speed setting down to prevent cold air from blowing. A countdown in minutes and seconds until the engine is warm enough to begin delivering heat to the passengers alternates with the DELAY message at 25 second intervals. This countdown is based on actual measurement of the rate of engine coolant temperature change. During the delay time, mix mode is selected and the fan operates at a low speed to keep the windshield fog free.
- **REAR CONTROL (Three-Zone only)** – When the Rear System control knob is moved to the OFF position, there will be a delay of approximately 1 second before the system actually turns off. This delay is to prevent an undesired blower dropout if the knob is moved through OFF to the other selections.

REAR CONTROL PANEL – THREE ZONE ATC SYSTEM

Primary control of the rear compartment heating-A/C system for the Three-Zone ATC system is in the instrument panel center stack. This control allows the driver to turn the rear heating-A/C system off, or allows the intermediate seat occupants control of the rear system by switching to the REAR position, or provides fully automatic control based on the temperature setting shown on the front control display.

- **REAR CONTROL** – Selecting automatic control of the rear unit at the instrument panel, illuminates a Locked Padlock in the rear control panel display. Selecting REAR activates the rear control panel and the Padlock then appears unlocked.
- **FAN KNOB** – The rear fan control has Off and AUTO positions and a range of manual speed settings that override the AUTO setting.
- **MODE KNOB** – The mode control allows intermediate seat occupants to manually override the automatic mode and select any balance of air flow between overhead and floor outlets from full overhead to full floor.
- **SET TEMP** – The rear set temp control will operate identical to the front controls. If the front control rear set temp button is pressed simultaneously with the rear control head, then the front control head press events shall have priority, i.e. if the front user presses Rear Set Temp down and the rear user presses Set Temp up, then the rear set temp will decrease.

DIAGNOSIS AND TESTING

A/C COOL DOWN TEST

The heater-A/C control module can perform an A/C cool down test, which is a test performed during the manufacturing process to confirm that the air conditioning system is performing satisfactorily. This test can also provide a quick confirmation of air conditioning system performance to the service technician. If the test is completed satisfactorily, no further service is required. If the test is failed, proceed to the A/C Performance Test to confirm the A/C system is operating properly, or use a DRBIII® scan tool to diagnose the A/C system control and distribution systems. Refer to the appropriate diagnostic information.

MANUAL TEMPERATURE CONTROL

The front blower speed and rear blower speed (if equipped with rear HVAC) must be set to High and the evaporator temperature sensor must be greater than 13° C (55° F) or the test will fail immediately. The test is activated by depressing the A/C and Rear Wipe/Wash buttons simultaneously and holding them depressed for no less than five seconds. The Rear Wipe/Wash and A/C LEDs will blink on and off until the test is complete. If the LEDs stop blinking before two minutes, then the cool down test has been completed successfully. If the two minutes expire without the expansion valve temperature reaching -6° C (20° F) less than the outside air temperature, then the cool down test has been failed and further A/C system diagnosis is required. If the test is failed, the LEDs will continue to blink until the vehicle has been driven for greater than 13 km (8 miles).

AUTOMATIC TEMPERATURE CONTROL

The ambient air temperature in the room where the vehicle will be tested must be a minimum of 21° C (70°F) for this test. The test is activated by depressing the A/C and PWR buttons simultaneously and holding them depressed for no less than four seconds. The snowflake icon and the DELAY text in the ATC display will blink on and off alternately until the test is complete. If the snowflake icon and the DELAY text stop blinking before two minutes, then the cool down test has been completed successfully. If the two minutes expire without the evaporator temperature reaching -6° C (20° F) less than the evapo-

rator initial temperature, then the cool down test has been failed and further A/C system diagnosis is required. If the test is failed, the snowflake icon and the DELAY text will continue to blink across ignition cycles until the vehicle has been driven for greater than 13 km (8 miles).

A/C PERFORMANCE TEST

The A/C system is designed to remove heat and humidity from the air entering the passenger compartment. The evaporator, located in the HVAC housing, is cooled to temperatures near the freezing point. As warm damp air passes over the fins in the A/C evaporator, moisture in the air condenses to water, dehumidifying the air. Condensation on the evaporator fins reduces the evaporators ability to absorb heat. During periods of high heat and humidity, an A/C system will be less effective. With the instrument control set to recirculation mode, only air from the passenger compartment passes through the A/C evaporator. As the passenger compartment air dehumidifies, A/C performance levels rise.

Humidity has an important bearing on the temperature of the air delivered to the interior of the vehicle. It is important to understand the effect that humidity has on the performance of the A/C system. When humidity is high, the A/C evaporator has to perform a double duty. It must lower the air temperature, and it must lower the temperature of the moisture in the air that condenses on the evaporator fins. Condensing the moisture in the air transfers heat energy into the evaporator fins and tubing. This reduces the amount of heat the A/C evaporator can absorb from the air. High humidity greatly reduces the ability of the A/C evaporator to lower the temperature of the air.

However, evaporator capacity used to reduce the amount of moisture in the air is not wasted. Wringing some of the moisture out of the air entering the vehicle adds to the comfort of the passengers. Although, an owner may expect too much from their A/C system on humid days. A performance test is the best way to determine whether the system is performing up to design standards. This test also provides valuable clues as to the possible cause of trouble with the A/C system. The ambient air temperature in the location where the vehicle will be tested must be a minimum of 21° C (70° F) for this test.

PERFORMANCE TEST PROCEDURE

WARNING: REFER TO THE APPLICABLE WARNINGS AND CAUTIONS FOR THIS SYSTEM BEFORE PERFORMING THE FOLLOWING OPERATION (Refer to 24 - HEATING & AIR CONDITIONING/PLUMBING - FRONT - WARNING - A/C PLUMBING) and (Refer to 24 - HEATING & AIR CONDITIONING/PLUMBING - FRONT - CAUTION - A/C PLUMBING).

NOTE: When connecting the service equipment coupling to the line fitting, verify that the valve of the coupling is fully closed. This will reduce the amount of effort required to make the connection.

(1) Connect a tachometer and a manifold gauge set.

(2) Set the mode control to the Recirculation Mode position, the temperature control to the full cool position and the blower to the highest speed position.

(3) Start the engine and hold at 1,000 rpm with the A/C compressor clutch engaged.

(4) The engine should be warmed up to operating temperature with the doors closed and windows open.

(5) Insert a thermometer in the driver's side center panel A/C-heater outlet and operate the engine for five minutes.

(6) If the compressor clutch does not engage, proceed with diagnosis of the compressor clutch coil. (Refer to 24 - HEATING & AIR CONDITIONING/ CONTROLS - FRONT/COMPRESSOR CLUTCH COIL - DIAGNOSIS AND TESTING).

(7) With the A/C compressor clutch engaged, compare the air temperature at the center panel outlet and the compressor discharge pressure to the A/C Performance Temperature and Pressure chart. The compressor clutch may cycle, depending upon the ambient temperature and humidity. If the clutch cycles, use the readings obtained before the clutch disengaged.

HEATING & AIR CONDITIONING (Continued)

A/C PERFORMANCE TEMPERATURE AND PRESSURE

Ambient Temperature	21° C (70° F)	27° C (80° F)	32° C (90° F)	38° C (100° F)	43° C (110° F)
Left Center Panel Outlet Discharge Air Temperature	1 to 8° C (34 to 46° F)	3 to 9° C (37 to 49° F)	4 to 10°C (39 to 50° F)	6 to 11°C (43 to 52° F)	7 to 18° C (45 to 65° F)
Discharge Pressure (High Side Service Port)	1034 to 1724 kPa (150 to 250 psi)	1517 to 2275 kPa (220 to 330 psi)	1999 to 2620 kPa (290 to 380 psi)	2068 to 2965 kPa (300 to 430 psi)	2275 to 3421 kPa (330 to 450 psi)
Suction Pressure (Low Side Service Port)	103 to 207 kPa (15 to 30 psi)	117 to 221 kPa (17 to 32 psi)	138 to 241 kPa (20 to 35 psi)	172 to 269 kPa (25 to 39 psi)	207 to 345 kPa (30 to 50 psi)

(8) If the air outlet temperature fails to meet the specifications in the A/C Performance Temperature and Pressure chart, or if the compressor discharge pressure is high, refer to the A/C Pressure Diagnosis Chart.

A/C PRESSURE DIAGNOSIS

Condition	Possible Causes	Correction
Rapid A/C compressor clutch cycling (ten or more cycles per minute).	1. Low refrigerant system charge.	1. See Refrigerant System Leaks in this group. Test the refrigerant system for leaks. Repair, evacuate and charge the refrigerant system, if required.
Equal pressures, but the compressor clutch does not engage.	1. No refrigerant in the refrigerant system.	1. See Refrigerant System Leaks in this group. Test the refrigerant system for leaks. Repair, evacuate and charge the refrigerant system, if required.
	2. Faulty fuse.	2. Check the fuses in the Integrated Power Module. Repair the shorted circuit or component and replace the fuses, if required. Refer to Group 8.
	3. Faulty A/C compressor clutch coil.	3. See A/C Compressor Clutch Coil in this group. Test the compressor clutch coil and replace, if required.
	4. Faulty A/C compressor clutch relay.	4. See A/C Compressor Clutch Relay in this group. Test the compressor clutch relay and relay circuits. Repair the circuits or replace the relay, if required.
	5. Improperly installed or faulty evaporator temperature sensor.	5. See Evaporator Temperature Sensor in this group. Test the sensor and replace, if required.
	6. Faulty A/C pressure transducer.	6. See A/C Pressure Transducer in this group. Test the sensor and replace, if required.
	7. Faulty Powertrain Control Module (PCM).	7. Refer to the proper Diagnostic Procedures manual for testing of the PCM. Test the PCM and replace, if required.

HEATING & AIR CONDITIONING (Continued)

Condition	Possible Causes	Correction
Normal pressures, but A/C Performance Test air temperatures at center panel outlet are too high.	1. Excessive refrigerant oil in system.	1. See Refrigerant Oil Level in this group. Recover the refrigerant from the refrigerant system and inspect the refrigerant oil content. Restore the refrigerant oil to the proper level, if required.
	2. Blend door actuator improperly installed or faulty.	2. See Blend Door Actuator in this group. Inspect the actuator for proper operation and replace, if required.
	3. Blend door inoperative or sealing improperly.	3. See HVAC Housing in this group. Inspect the blend door for proper operation and sealing. Repair if required.
	4. Blend door not in full cold position.	Use a DRBIII Scan Tool to check for DTCs and blend door position. Refer to Body Diagnostic Procedures.
The low side pressure is normal or slightly low, and the high side pressure is too low.	1. Low refrigerant system charge.	1. See Refrigerant System Leaks in this group. Test the refrigerant system for leaks. Repair, evacuate and charge the refrigerant system, if required.
	2. Refrigerant flow through the A/C evaporator is restricted.	2. See A/C Evaporator in this group. Replace the restricted A/C evaporator, if required.
	3. Faulty A/C compressor.	3. See A/C Compressor in this group. Replace the compressor, if required.
The low side pressure is normal or slightly high, and the high side pressure is too high.	1. A/C condenser air flow restricted.	1. Check the A/C condenser for damaged fins, foreign objects obstructing air flow through the condenser fins, and missing or improperly installed air seals. Clean, repair, or replace components as required.
	2. Refrigerant flow through the receiver/drier is restricted.	2. See Receiver/Drier in this group. Replace the restricted receiver/drier, if required.
	3. Inoperative radiator cooling fan.	3. Test the radiator cooling fan and replace, if required. Refer to Group 7.
	4. Refrigerant system overcharged.	4. See Refrigerant System Charge in this group. Recover the refrigerant from the refrigerant system. Charge the refrigerant system to the proper level, if required.
	5. Air in the refrigerant system.	5. See Refrigerant System Leaks in this group. Test the refrigerant system for leaks. Repair, evacuate and charge the refrigerant system, if required.
	6. Engine overheating.	6. Test the engine cooling system and repair, if required. Refer to Group 7.
The low side pressure is too high, and the high side pressure is too low.	1. Accessory drive belt slipping.	1. Inspect the accessory drive belt condition and tension. Tighten or replace the accessory drive belt, if required. Refer to Group 7.
	2. Faulty A/C expansion valve.	2. See A/C Expansion Valve in this group. Replace the valve, if required.
	3. Faulty A/C compressor.	3. See A/C Compressor in this group. Replace the compressor, if required.

HEATING & AIR CONDITIONING (Continued)

Condition	Possible Causes	Correction
The low side pressure is too low, and the high side pressure is too high.	1. Restricted refrigerant flow through the refrigerant lines.	1. See Liquid Line, Suction Line and Discharge Line in this group. Inspect the refrigerant lines for kinks, tight bends or improper routing. Correct the routing or replace the refrigerant line, if required.
	2. Restricted refrigerant flow through the A/C expansion valve.	2. See A/C Expansion Valve in this group. Replace the valve, if required.
	3. Restricted refrigerant flow through the A/C condenser.	3. See A/C Condenser in this group. Replace the restricted condenser, if required.

HEATER PERFORMANCE TEST

WARNING: REVIEW SAFETY PRECAUTIONS AND WARNINGS IN THIS GROUP BEFORE PERFORMING THIS PROCEDURE (Refer to 24 - HEATING & AIR CONDITIONING/PLUMBING - WARNING).

Check the coolant level, drive belt tension, radiator air flow and fan operation. Start engine and allow to warm up to normal operating temperature.

WARNING: DO NOT REMOVE RADIATOR CAP WHEN ENGINE IS HOT, PERSONAL INJURY CAN RESULT.

If vehicle has been run recently, wait 15 minutes before removing the radiator cap. Place a rag over the cap and turn it to the first safety stop. Allow pressure to escape through the overflow tube. When the system pressure stabilizes, remove the cap completely.

MAXIMUM HEATER OUTPUT: TEST AND ACTION

Engine coolant is provided to the heater system by two heater hoses. With the engine idling at normal operating temperature, set the temperature control to maximum heat, the mode control to the floor position, and the blower in the highest speed position. Using a test thermometer, check the temperature of the air being discharged from the floor outlets. Compare the test thermometer reading to the Temperature Reference chart.

TEMPERATURE REFERENCE

Ambient Temperature		Minimum Floor Outlet Temperature	
Celsius	Fahrenheit	Celsius	Fahrenheit
15.5°	60°	62.2°	144°
21.1°	70°	63.8°	147°
26.6°	80°	65.5°	150°
32.2°	90°	67.2°	153°

If the floor outlet air temperature is insufficient, check that the cooling system is operating to specifications (Refer to 7 - COOLING/ENGINE - DIAGNOSIS AND TESTING). Both heater hoses should be HOT to the touch (the coolant return hose should be slightly cooler than the supply hose). If the coolant return hose is much cooler than the supply hose, locate and repair the engine coolant flow obstruction in heater system.

OBSTRUCTED COOLANT FLOW Possible locations or causes of obstructed coolant flow are as follows:

- Pinched or kinked heater hoses.
- Improper heater hose routing.
- Plugged heater hoses or supply and return ports at the cooling system connections.
- Plugged heater core.

If proper coolant flow through the cooling system is verified, and heater outlet air temperature is insufficient, a mechanical problem may exist.

MECHANICAL PROBLEMS

Possible causes of insufficient heat due to mechanical problems are as follows:

- Obstructed cowl air intake.
- Obstructed heater system outlets.
- Blend door not functioning properly.

HEATING & AIR CONDITIONING (Continued)

TEMPERATURE CONTROL

If the heater outlet air temperature cannot be adjusted with the temperature control knob on the A/C-heater control panel, the following could require service:

- Blend door binding.
- Faulty blend door actuator.
- Faulty A/C-heater control.
- Faulty related wiring harness or connectors.
- Improper engine coolant temperature.

SPECIFICATIONS

A/C SYSTEM

The R-134a refrigerant system charge capacity for this vehicle can be found on the underhood Specification Label.

SYSTEM SPECIFICATIONS

Item	Description	Notes
A/C Compressor	Denso 10S17 – 2.4L/2.5L/2.8L/3.3L without rear A/C Denso 10S20 – 3.3L/3.8L with rear A/C	ND-8 PAG Oil
Freeze–up Control	Evaporator temperature sensor	HVAC housing mounted (RS models), Evaporator mounted (RG models) - input to A/C-heater control module
Low PSI Control	A/C pressure transducer	Liquid line mounted - input to Powertrain Control Module (PCM) - PCM opens compressor clutch relay above 200 kPa (29 psi)
High PSI Control	A/C pressure transducer	Liquid line mounted - input to PCM - PCM opens compressor clutch relay below 3100 kPa (450 psi)
	High Pressure relief valve	Compressor mounted - opens above 3445-4135 kPa (500-600 psi), closes below 2756 kPa (400 psi)
Compressor Clutch Coil Draw	Denso 10S17 – 3.3 amps @ 12V ± 0.5V @ 21° C (70° F) Denso 10S20 – 2.2 amps @ 12V ± 0.5V @ 21° C (70° F)	
Compressor Clutch Air Gap	0.35 - 0.60 mm (0.014 - 0.024 in.)	

TORQUE SPECIFICATIONS

Description	N·m	Ft. Lbs.	In. Lbs.
A/C Compressor Shaft Bolt	17.5	–	155
A/C Compressor Mounting Bolts (2.4L/2.5L/2.8L)	28	21	–
A/C Compressor Mounting Bolts (3.3L/3.8L)	54	40	–
A/C Compressor Mounting Bracket Bolts (2.4L)	54	40	–
A/C Condenser Mounting Bracket Screws	5	–	45
A/C Expansion Valve Screws	11	–	97
A/C-Heater Control Screws	2	–	17
Blend Door Actuator Screws	2	–	17
Blower Motor Screws	2	–	17
Blower Motor Power Module Screws (ATC)	2	–	17
Blower Motor Resistor Block Screws (MTC)	2	–	17
Center Bezel Outlet Screws	2	–	17

HEATING & AIR CONDITIONING (Continued)

Description	N·m	Ft. Lbs.	In. Lbs.
Distribution Housing Screws	2	–	17
Discharge Line to Compressor Nut	23	17	–
Discharge Line to Condenser Nut	23	17	–
Front Fascia Screws	6	–	53
Front Fascia Grille Insert Screws	2	–	17
Heater Core Mounting Plate Screws	2	–	17
Heater Core Sealing Plate Screws	3	–	26
Hood Latch Screws	14	–	123
HVAC Housing Bracket Bolt	3	–	26
HVAC Housing Mounting Nuts	7	–	62
HVAC Housing Mounting Bolts	4	–	35
Liquid Line to Condenser Nut	23	17	–
Liquid Line to Receiver/drier Bolt	11	–	97
Lower Air inlet Housing Screws	2	–	17
Mode Door Actuator Screws	2	–	17
Quarter Trim Panel Attaching Bracket Screws	2	–	17
Rear Blower Motor Screws	2	–	17
Rear Blower Motor Power Module Screws (ATC)	2	–	17
Rear Blower Motor Resistor Block Screws (MTC)	2	–	17
Rear Capture Plate Screw	2	–	17
Rear Evaporator Line Seal Plate to Rear Expansion Valve Nut	23	17	–
Rear Expansion Valve Bracket Nut	23	17	–
Rear Expansion Valve Bracket Screws	2	–	17
Rear Expansion Valve to Rear Evaporator Screws	11	–	97
Rear Floor Heat Duct Screws	2	–	17
Rear HVAC Housing Screws	2	–	17
Rear HVAC Housing Mounting Screws	11	–	97
Rear HVAC Housing Stud Nuts	9	–	80
Rear Mode Door Actuator Screws	2	–	17
Receiver/drier Bracket Nuts	10	–	89
Recirculation Door Actuator Screws	2	–	17
Refrigerant Lines to Expansion Valve Nut	23	17	–
Suction Line to Compressor Nut	23	17	–
Cabin Heater Air Intake Pipe Screws	7	–	62
Cabin Heater M6 Bolts	7	–	62
Cabin Heater M8 Bolts	23	17	–
Cabin Heater Seat Hex Nut	60	44	–
Underbody Liquid Line Fitting	23	17	–
Underbody Refrigerant Line Sealing Plate Bolt/Nut	23	17	–
Underbody Suction Line Fitting	23	17	–
Upper Air Inlet Housing Screws	2	–	17

CONTROLS - FRONT

TABLE OF CONTENTS

page

A/C COMPRESSOR CLUTCH/COIL
DESCRIPTION . . . 13
OPERATION . . . 13
DIAGNOSIS AND TESTING
A/C COMPRESSOR CLUTCH COIL . . . 14
STANDARD PROCEDURE
CLUTCH INSPECTION . . . 15
A/C CLUTCH BREAK-IN . . . 15
REMOVAL . . . 15
INSTALLATION . . . 16
A/C COMPRESSOR CLUTCH RELAY
DESCRIPTION . . . 18
OPERATION . . . 18
REMOVAL . . . 19
INSTALLATION . . . 19
A/C HEATER CONTROL
DESCRIPTION . . . 19
STANDARD PROCEDURE
A/C-HEATER CONTROL CALIBRATION . . . 19
REMOVAL . . . 20
INSTALLATION . . . 20
A/C PRESSURE TRANSDUCER
DESCRIPTION . . . 20
OPERATION . . . 20
DIAGNOSIS AND TESTING
A/C PRESSURE TRANSDUCER . . . 21
REMOVAL . . . 21
INSTALLATION . . . 21
BLEND DOOR ACTUATOR
DESCRIPTION . . . 22
OPERATION . . . 22
REMOVAL . . . 22
INSTALLATION . . . 22
BLOWER MOTOR RELAY
DESCRIPTION . . . 23
OPERATION . . . 23
REMOVAL . . . 24

page

INSTALLATION . . . 24
BLOWER MOTOR RESISTOR BLOCK
DESCRIPTION . . . 24
OPERATION . . . 24
DIAGNOSIS AND TESTING
FRONT BLOWER MOTOR RESISTOR BLOCK . . . 25
REMOVAL . . . 25
INSTALLATION . . . 25
EVAPORATOR TEMPERATURE SENSOR
DESCRIPTION . . . 26
OPERATION . . . 27
REMOVAL
RG MODELS . . . 27
RS MODELS . . . 27
INSTALLATION
RG MODELS . . . 27
RS MODELS . . . 28
INFRARED TEMPERATURE SENSOR
DESCRIPTION . . . 28
OPERATION . . . 28
MODE DOOR ACTUATOR
DESCRIPTION . . . 29
OPERATION . . . 29
REMOVAL . . . 29
INSTALLATION . . . 30
POWER MODULE - BLOWER MOTOR
DESCRIPTION . . . 30
OPERATION . . . 30
REMOVAL . . . 30
INSTALLATION . . . 31
RECIRCULATION DOOR ACTUATOR
DESCRIPTION . . . 31
OPERATION . . . 31
REMOVAL . . . 32
INSTALLATION . . . 32

A/C COMPRESSOR CLUTCH/ COIL

DESCRIPTION

The A/C compressor clutch assembly consists of a stationary electromagnetic A/C clutch field coil with a zener diode, a pulley bearing and pulley assembly, and a clutch plate (Fig. 1). These components provide the means to engage and disengage the A/C compressor from the engine accessory drive belt.

The A/C clutch field coil and the pulley bearing and pulley assembly are both retained on the nose of the A/C compressor with snap rings. The clutch plate is splined to the compressor shaft and secured with a bolt.

OPERATION

The compressor clutch components provide the means to engage and disengage the compressor from the engine serpentine accessory drive belt. When the clutch coil is energized, it magnetically draws the

A/C COMPRESSOR CLUTCH/COIL (Continued)

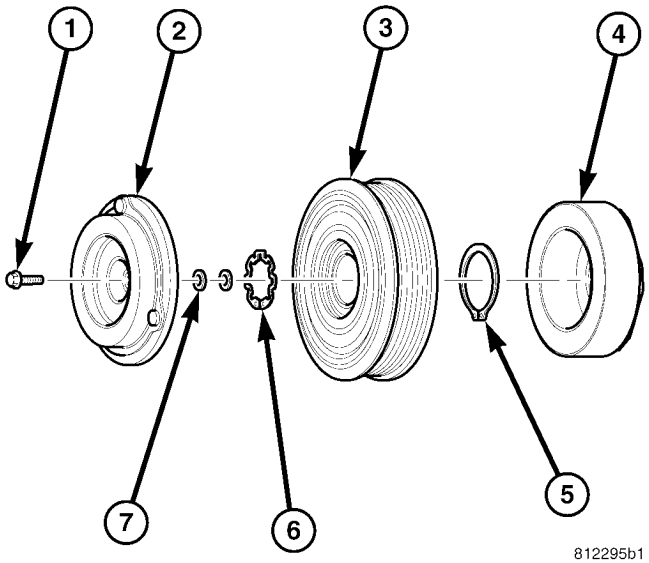

Fig. 1 A/C Compressor Clutch

1 - BOLT
2 - CLUTCH PLATE
3 - PULLEY AND BEARING
4 - FIELD COIL
5 - SNAP RING (2)
6 - SHIM

clutch plate into contact with the clutch pulley and drives the compressor shaft. When the coil is not energized, the pulley freewheels on the clutch hub bearing, which is part of the pulley.

A zener diode is connected in parallel with the clutch electromagnetic coil. This diode controls the dissipation of voltage induced into the coil windings by the collapsing of the electromagnetic fields that occurs when the compressor clutch is disengaged. The zener diode dissipates this induced voltage by regulating a current path to ground. This arrangement serves to protect other circuits and components from potentially damaging voltage spikes in the vehicle electrical system that might occur if the voltage induced in the clutch coil windings could not be dissipated.

The compressor clutch engagement is controlled by several components: the heater-A/C controls in the passenger compartment, the A/C pressure transducer on the liquid line, the evaporator temperature sensor on the expansion valve for automatic temperature control (ATC) system or on the HVAC housing for manual temperature control (MTC) system, the Powertrain Control Module (PCM) in the engine compartment, and the compressor clutch relay in the Integrated Power Module (IPM). The PCM may delay compressor clutch engagement for up to thirty seconds (Refer to 8 - ELECTRICAL/ELECTRONIC CONTROL MODULES/POWERTRAIN CONTROL MODULE - DESCRIPTION - PCM OPERATION).

DIAGNOSIS AND TESTING

A/C COMPRESSOR CLUTCH COIL

The air conditioning compressor clutch coil electrical circuit is controlled by the powertrain control module (PCM) through the A/C compressor clutch relay, which is located in the integrated power module (IPM) in the engine compartment. Begin testing of a suspected compressor clutch coil problem by performing the preliminary checks.

PRELIMINARY CHECKS

(1) If the compressor clutch will not engage, verify the refrigerant charge level (Refer to 24 - HEATING & AIR CONDITIONING/PLUMBING - FRONT/REFRIGERANT - DIAGNOSIS AND TESTING - REFRIGERANT CHARGE LEVEL). If the refrigerant charge level is OK, go to Step 2. If the refrigerant charge level is not OK, adjust the refrigerant charge as required.

(2) If the A/C compressor clutch still will not engage, disconnect the wire harness connector for the A/C pressure transducer and check for battery current at the connector with the engine running and the A/C-heater control set to the A/C mode. If OK, go to TESTS. If not OK, refer to Body Diagnostic Procedures to perform further diagnosis.

TESTS

(1) Verify the battery state of charge (Refer to 8 - ELECTRICAL/BATTERY SYSTEM/BATTERY - DIAGNOSIS AND TESTING).

(2) Connect an ammeter (0 to 10 ampere scale selected) in series with the clutch coil feed terminal. Connect a voltmeter (0 to 20 volt scale selected) to measure voltage across the battery and the clutch coil.

(3) With the heater-A/C control in the A/C mode and the blower at low speed, start the engine and allow it to run at a normal idle speed.

(4) The compressor clutch should engage immediately, and the clutch coil voltage should be within two volts of the battery voltage. If the coil voltage is not within two volts of battery voltage, test the clutch coil feed circuit for excessive voltage drop. If the compressor clutch does not engage, refer to Body Diagnostic Procedures to perform further diagnosis.

(5) For the acceptable A/C clutch coil current draw specificationsrefer to 24 - HEATING & AIR CONDITIONING - SPECIFICATIONS. Specifications apply for a work area temperature of 21° C (70° F). If voltage is more than 12.5 volts, add electrical loads by turning on electrical accessories until voltage reads below 12.5 volts.

(a) If the compressor clutch coil current reading is zero, the coil is open and must be replaced.

(b) If the compressor clutch coil current reading is four amperes or more, the coil is shorted and must be replaced.

STANDARD PROCEDURE

CLUTCH INSPECTION

NOTE: The compressor clutch can be serviced in the vehicle. The refrigerant system can remain fully-charged during compressor clutch, pulley, or coil replacement.

Examine the friction surfaces of the clutch pulley and the clutch plate for wear. The pulley and plate should be replaced if there is excessive wear or scoring.

If the friction surfaces are oily, inspect the shaft and nose area of the A/C compressor for refrigerant oil. If refrigerant oil is found, the compressor shaft seal is leaking and the A/C compressor must be replaced.

Check the clutch pulley bearing for roughness or excessive leakage of grease. Replace the pulley and bearing assembly, if required.

A/C CLUTCH BREAK-IN

After a new A/C compressor clutch has been installed, cycle the compressor clutch approximately twenty times (five seconds on, then five seconds off). During this procedure, set the A/C-heater controls to the A/C Recirculation Mode, the blower motor in the highest speed position, and the engine speed at 1500 to 2000 rpm. This procedure (burnishing) will seat the opposing friction surfaces of the compressor clutch, which provides optimum compressor clutch torque capability.

REMOVAL

NOTE: The compressor clutch can be serviced in the vehicle. The refrigerant system can remain fully-charged during compressor clutch, pulley, or coil replacement.

(1) Disconnect and isolate the negative battery cable.

(2) Remove the accessory drive belt (Refer to 7 - COOLING/ACCESSORY DRIVE/DRIVE BELTS - REMOVAL).

(3) Raise and support the vehicle.

(4) Disconnect the engine wire harness connector for the compressor clutch coil from the clutch coil pigtail wire connector on the top of the A/C compressor.

(5) On models with the 3.3L and 3.8L engines, disengage the retainer on the engine wire harness compressor clutch coil take out from the bracket on the top of the A/C compressor.

(6) On models with the 2.4L, 2.5L and 2.8L engines, remove all of the compressor mounting bolts except the upper left (rear of the A/C compressor), which should only be loosened. Allow the front (pulley end) of the A/C compressor to tilt downward far enough to access the clutch for removal, then tighten the loosened upper left compressor mounting bolt.

(7) On models with the 3.3L and 3.8L engines, remove the two bolts and two nuts that secure the A/C compressor to the engine. Disengage the mounting ear at the front of the A/C compressor from the stud on the engine, allow the front (pulley end) of the A/C compressor to tilt downward far enough to access the clutch for removal, then reinstall and tighten the upper left compressor mounting bolt.

(8) Remove the compressor shaft bolt (Fig. 2). A band-type oil filter wrench or a strap wrench may be used to secure the clutch during bolt removal.

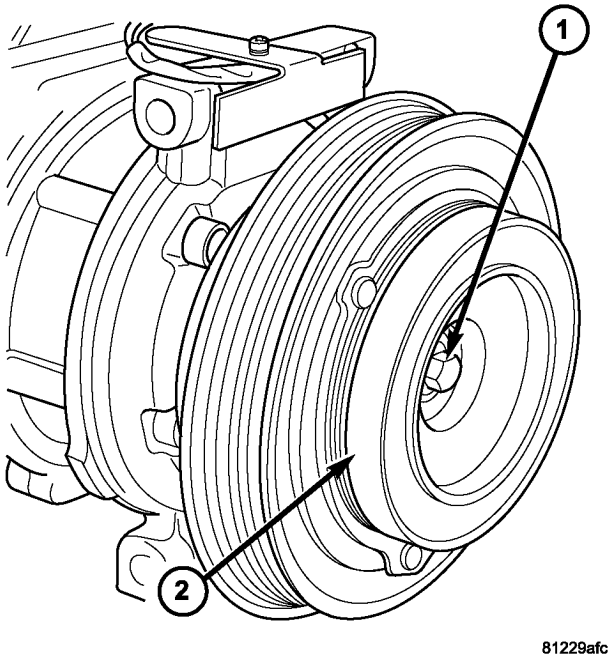

Fig. 2 A/C Compressor Shaft Bolt

1 - BOLT
2 - COMPRESSOR CLUTCH PLATE

(9) Tap the clutch plate lightly with a plastic mallet to release it from the splines on the compressor shaft. Remove the clutch plate and shim(s) from the compressor shaft (Fig. 3).

NOTE: Use care not to lose any of the shim(s).

A/C COMPRESSOR CLUTCH/COIL (Continued)

CAUTION: Do not pry between the clutch plate unit and the pulley to remove the clutch plate from the compressor shaft as this may damage the clutch plate.

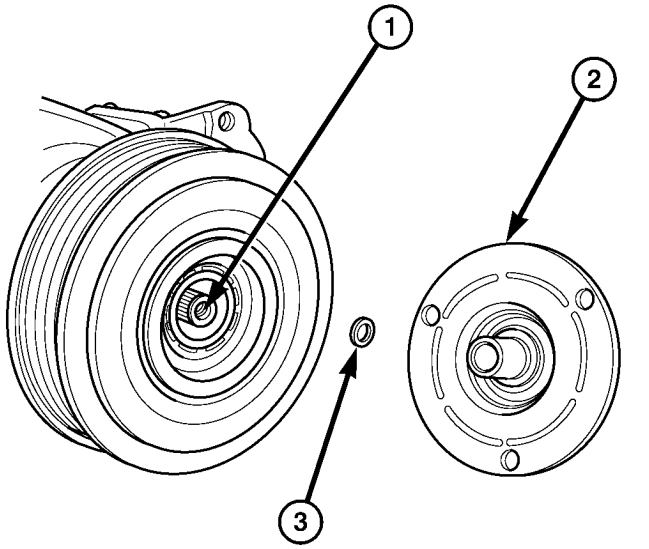

Fig. 3 Clutch Plate and Shim(s)

1 - COMPRESSOR SHAFT
2 - CLUCH PLATE
3 - SHIM

(10) Using snap ring pliers (Special Tool C-4574 or equivalent), remove the external snap ring that secures the pulley to the front cover of the A/C compressor, then slide the pulley off of the compressor (Fig. 4).

(11) Remove the screw that secures the clutch coil pigtail wire connector bracket and ground clip to the top of the compressor housing.

(12) Using snap ring pliers (Special Tool C-4574 or equivalent), remove the external snap ring that secures the clutch coil to the front cover of the compressor housing, then slide the clutch coil off of the A/C compressor (Fig. 5).

INSTALLATION

(1) Align the dowel pin on the back of the clutch coil with the hole in the compressor front cover and position the clutch coil onto the A/C compressor. Be certain that the clutch coil pigtail wires are properly oriented and routed so that they are not pinched between the compressor front cover and the clutch coil.

NOTE: A new snap ring must be used to secure the clutch coil to the A/C compressor. The bevel side of the snap ring must face outward.

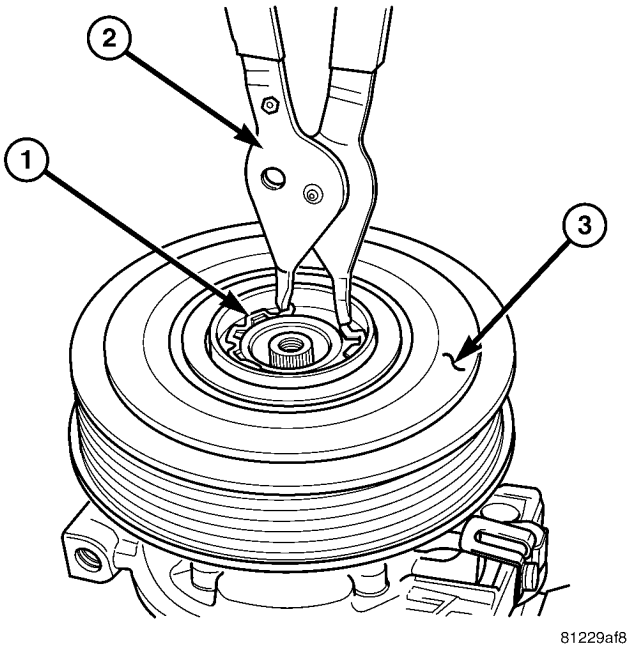

Fig. 4 Clutch Pulley Snap Ring

1 - SNAP RING
2 - SNAP RING PLIERS
3 - CLUTCH PULLEY AND BEARING

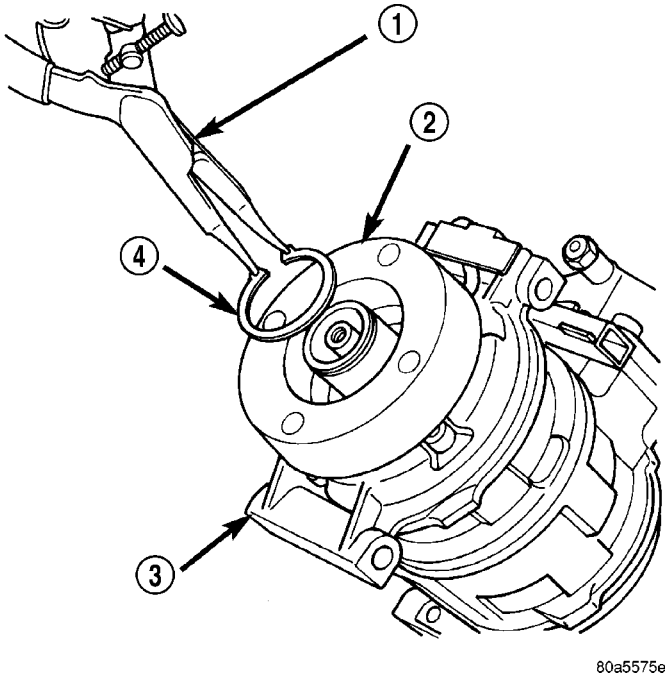

Fig. 5 Remove Clutch Coil Snap Ring

1 - SNAP RING PLIERS
2 - CLUTCH COIL
3 - COMPRESSOR
4 - SNAP RING

(2) Using snap ring pliers (Special Tool C-4574 or equivalent), install the external snap ring that secures the clutch coil to the front cover of the A/C

A/C COMPRESSOR CLUTCH/COIL (Continued)

compressor. The bevel side of the snap ring must face outward and both snap ring eyelets must be oriented to the right or the left of the clutch coil dowel pin location on the A/C compressor. Be certain that the snap ring is fully and properly seated in the groove.

CAUTION: If the snap ring is not fully seated in the groove it will vibrate out, resulting in a clutch failure and severe damage to the compressor front cover.

(3) Install and securely tighten the screw that secures the clutch coil pigtail wire connector bracket and ground clip to the top of the compressor housing.

(4) Install the pulley onto the front cover of the A/C compressor. If necessary, tap the pulley gently with a block of wood placed on the pulley friction surface (Fig. 6).

CAUTION: Do not mar the friction surfaces of the pulley.

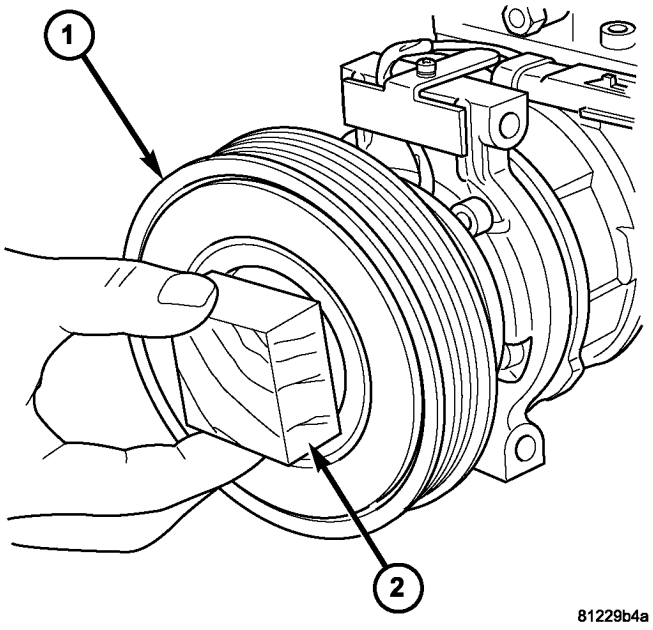

Fig. 6 Clutch Pulley - Installation

1 - PULLEY AND BEARING
2 - WOOD BLOCK

NOTE: A new snap ring must be used to secure the clutch pulley to the A/C compressor. The bevel side of the snap ring must face outward.

(5) Using snap ring pliers (Special Tool C-4574 or equivalent), install the external snap ring (bevel side facing outward) that secures the clutch pulley to the front cover of the A/C compressor. Be certain that the snap ring is fully and properly seated in the groove.

(6) If the original clutch plate and clutch pulley are to be reused, reinstall the original shim(s) on the compressor shaft against the shoulder. If a new clutch plate and/or clutch pulley are being used, install a trial stack of shims 2.54 mm (0.010 in.) thick on the compressor shaft against the shoulder.

(7) Install the clutch plate onto the compressor shaft.

NOTE: The shims may compress after tightening the shaft bolt. Check the air gap in four or more places to verify the air gap is still correct. Spin the pulley before performing a final check of the air gap.

(8) With the clutch plate assembly tight against the shim(s), measure the air gap between the clutch plate and the pulley face with feeler gauges. The air gap should be between 0.35 - 0.60 mm (0.014 - 0.024 in.). If the proper air gap is not obtained, add or subtract shims as needed until the desired air gap is obtained.

(9) Install the compressor shaft bolt. Tighten the bolt to 17.5 N·m (155 in. lbs.).

(10) On models with the 2.4L, 2.5L and 2.8L engines, loosely install the four bolts that secure the A/C compressor to the mounting bracket on the engine (2.4L), or the cylinder block (2.5L/2.8L). Tighten the bolts to 28 N·m (21 ft. lbs.).

(11) On models with the 3.3L and 3.8L engines, loosely install the two bolts and two nuts that secure the A/C compressor to the engine. Tighten each of the fasteners to 54 N·m (40 ft. lbs.) using the following sequence:

- The upper nut at the front of the compressor.
- The lower nut at the front of the compressor.
- The upper bolt at the rear of the compressor.
- The lower bolt at the rear of the compressor.

(12) On models with the 3.3L and 3.8L engines, engage the retainer on the engine wire harness compressor clutch coil take out with the bracket on the top of the A/C compressor.

(13) Connect the engine wire harness connector to the A/C compressor clutch coil.

(14) Install the accessory drive belt (Refer to 7 - COOLING/ACCESSORY DRIVE/DRIVE BELTS - INSTALLATION).

(15) Lower the vehicle.

(16) Reconnect the negative battery cable.

A/C COMPRESSOR CLUTCH RELAY

DESCRIPTION

The compressor clutch relay (Fig. 7) is a International Standards Organization (ISO) mini-relay. Relays conforming to the ISO specifications have common physical dimensions, current capacities, terminal patterns, and terminal functions. The ISO mini-relay terminal functions are the same as a conventional ISO relay. However, the ISO mini-relay terminal pattern (or footprint) is different, the current capacity is lower, and the physical dimensions are smaller than those of the conventional ISO relay. The A/C compressor clutch relay is located in the integrated power module (IPM) in the engine compartment. See the fuse and relay map molded into the inner surface of the cover of the IPM for A/C compressor clutch relay identification and location.

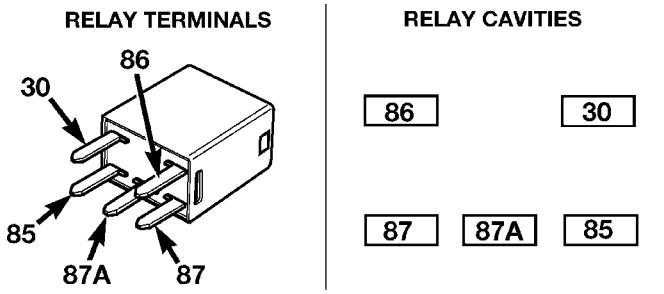

Fig. 7 A/C Compressor Clutch Relay

The black, molded plastic case is the most visible component of the A/C compressor clutch relay. Five male spade-type terminals extend from the bottom of the base to connect the relay to the vehicle electrical system, and the ISO designation for each terminal is molded into the base adjacent to each terminal. The ISO terminal designations are as follows:

- **30 (Common Feed)** - This terminal is connected to the movable contact point of the relay.
- **85 (Coil Ground)** - This terminal is connected to the ground feed side of the relay control coil.
- **86 (Coil Battery)** - This terminal is connected to the battery feed side of the relay control coil.
- **87 (Normally Open)** - This terminal is connected to the normally open fixed contact point of the relay.
- **87A (Normally Closed)** - This terminal is connected to the normally closed fixed contact point of the relay.

OPERATION

The A/C compressor clutch relay is an electromechanical switch that uses a low current input from the powertrain control module (PCM) to control the high current output to the compressor clutch electromagnetic coil. The movable common feed contact point is held against the fixed normally closed contact point by spring pressure. When the relay coil is energized, an electromagnetic field is produced by the coil windings. This electromagnetic field draws the movable relay contact point away from the fixed normally closed contact point, and holds it against the fixed normally open contact point. When the relay coil is de-energized, spring pressure returns the movable contact point back against the fixed normally closed contact point. The resistor or diode is connected in parallel with the relay coil in the relay, and helps to dissipate voltage spikes and electromagnetic interference that can be generated as the electromagnetic field of the relay coil collapses.

The compressor clutch relay terminals are connected to the vehicle electrical system through a receptacle in the integrated power module (IPM). The inputs and outputs of the A/C compressor clutch relay include:

- The common feed terminal (30) receives a battery current input from a fuse in the IPM through a fused B(+) circuit at all times.
- The coil ground terminal (85) receives a ground input from the PCM through the compressor clutch relay control circuit only when the PCM electronically pulls the control circuit to ground.
- The coil battery terminal (86) receives a battery current input from the PCM through a fused ignition switch output (run-start) circuit only when the ignition switch is in the On or Start positions.
- The normally open terminal (87) provides a battery current output to the compressor clutch coil through the compressor clutch relay output circuit only when the compressor clutch relay coil is energized.
- The normally closed terminal (87A) is not connected to any circuit in this application, but provides a battery current output only when the compressor clutch relay coil is de-energized.

The A/C compressor clutch relay cannot be repaired and, if faulty or damaged, it must be replaced. Refer to the appropriate wiring information for diagnosis and testing of the micro-relay and for complete HVAC wiring diagrams.

A/C COMPRESSOR CLUTCH RELAY (Continued)

REMOVAL

(1) Disconnect and isolate the negative battery cable.

(2) Remove the cover from the integrated power module (IPM) (Fig. 8).

NOTE: Refer to the fuse and relay map on the inner surface of the cover of the IPM for A/C compressor clutch relay identification and location.

(3) Remove the A/C compressor clutch relay from the IPM.

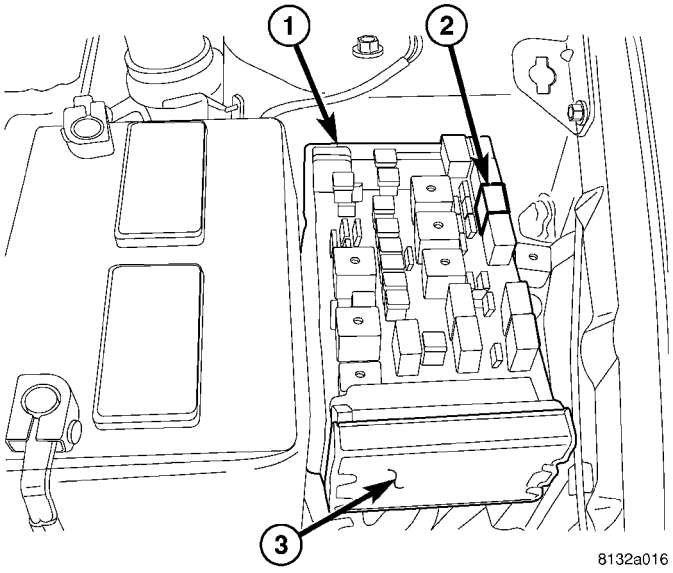

Fig. 8 A/C Compressor Clutch Relay

1 - INTEGRATED POWER MODULE (IPM)
2 - A/C COMPRESSOR CLUTCH RELAY
3 - FRONT CONTROL MODULE

INSTALLATION

NOTE: Refer to the fuse and relay map on the inner surface of the cover of the integrated power module (IPM) for A/C compressor clutch relay identification and location.

(1) Position the A/C compressor clutch relay into the proper receptacle in the IPM.

(2) Align the A/C compressor clutch relay terminals with the terminal cavities in the IPM receptacle.

(3) Push down firmly on the A/C compressor clutch relay until the terminals are fully seated in the terminal cavities.

(4) Install the cover onto the IPM.

(5) Reconnect the negative battery cable.

A/C HEATER CONTROL

DESCRIPTION

The A/C-heater control is located at the center of the instrument panel and uses electrical controls. These controls provide the vehicle operator with a number of setting options to help control the climate and comfort within the vehicle. Refer to the owner's manual in the vehicle glove box for more information on the suggested operation and use of these controls.

The A/C-heater control cannot be repaired. If faulty or damaged, the entire unit must be replaced. The control knobs are available for service replacement.

STANDARD PROCEDURE

A/C-HEATER CONTROL CALIBRATION

The A/C-heater control module must be recalibrated each time an actuator motor or the control module is replaced. If the vehicle is so equipped, the calibration procedure also includes rear HVAC positions for each actuator motor.

(1) Turn the ignition switch to the On position.

(2) If equipped with the manual temperature control (MTC) system, press and hold the Rear Wipe/Wash and Recirculation buttoms for at least five seconds. If equipped with the automatic temperature control (ATC) systen, simultaneously press and hold the Power and Recirculation buttons on the A/C-heater control for at least five seconds. The MTC A/C-heater control Rear Wipe/Wash Light Emitting Diode (LED) and Recirculation LED, or the ATC A/C-heater control Delay and Recirculation graphics will begin to flash when the calibration procedure has begun.

(3) The calibration procedure should take less than two minutes to complete for the manual A/C-heater control, and less than twenty seconds for the ATC A/C-heater control. When the LEDs or graphics stop flashing, the calibration procedure is complete.

(4) If the LEDs or graphics continue to flash beyond the two minute (manual) or twenty second (ATC) calibration time, it indicates that the A/C-heater control has detected a failure and a Diagnostic Trouble Code (DTC) has been set. Refer to Body Diagnostic Procedures to perform further diagnosis. The LEDs or graphics will continue to flash even after the ignition switch is cycled Off and On, until a successful calibration is completed or until the vehicle has been driven about 13 kilometers (8 miles).

A/C HEATER CONTROL (Continued)

REMOVAL

WARNING: ON VEHICLES EQUIPPED WITH AIRBAGS, DISABLE THE AIRBAG SYSTEM BEFORE ATTEMPTING ANY STEERING WHEEL, STEERING COLUMN, OR INSTRUMENT PANEL COMPONENT DIAGNOSIS OR SERVICE. DISCONNECT AND ISOLATE THE BATTERY NEGATIVE (GROUND) CABLE, THEN WAIT TWO MINUTES FOR THE AIRBAG SYSTEM CAPACITOR TO DISCHARGE BEFORE PERFORMING FURTHER DIAGNOSIS OR SERVICE. THIS IS THE ONLY SURE WAY TO DISABLE THE AIRBAG SYSTEM. FAILURE TO TAKE THE PROPER PRECAUTIONS COULD RESULT IN ACCIDENTAL AIRBAG DEPLOYMENT AND POSSIBLE PERSONAL INJURY.

(1) Disconnect and isolate the battery negative cable.

(2) Remove the center bezel from the instrument panel (Refer to 23 - BODY/INSTRUMENT PANEL/ INSTRUMENT PANEL CENTER BEZEL - REMOVAL).

(3) Place the instrument panel center bezel unit face down on a suitable work surface. Take the proper precautions to protect the center bezel from cosmetic damage.

(4) If the vehicle is equipped with the optional Automatic Temperature Control (ATC) system, disconnect the infrared sensor jumper harness connector from the receptacle on the back of the A/C-heater control (Fig. 9).

(5) Remove the six screws that secure the A/C-heater control to the back of the instrument panel center bezel.

(6) Remove the A/C-heater control from the instrument panel center bezel.

INSTALLATION

(1) Position the A/C-heater control onto the back of instrument panel center bezel.

(2) Install the six screws that secure the A/C-heater control to the back of the instrument panel center bezel. Tighten the screws to 2 N·m (17 in. lbs.).

(3) If the vehicle is equipped with the optional ATC system, reconnect the infrared sensor jumper harness connector to A/C-heater control.

(4) Install the center bezel onto the instrument panel (Refer to 23 - BODY/INSTRUMENT PANEL/ INSTRUMENT PANEL CENTER BEZEL - INSTALLATION).

(5) Reconnect the battery negative cable.

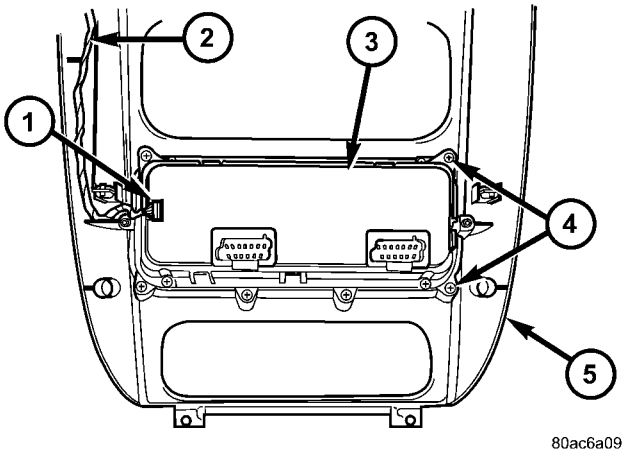

Fig. 9 A/C-Heater Control – ATC shown, MTC typical

1 - INFRARED SENSOR CONNECTOR (ATC ONLY)
2 - INFRARED SENSOR HARNESS (ATC ONLY)
3 - A/C-HEATER CONTROL
4 - SCREW (6)
5- INSTRUMENT PANEL CENTER BEZEL

A/C PRESSURE TRANSDUCER

DESCRIPTION

The A/C pressure transducer is a switch that is installed on a fitting located on the refrigerant liquid line between the receiver/drier and the expansion valve in the right rear corner of the engine compartment. An internally threaded hex fitting on the transducer connects it to the externally threaded Schrader-type fitting on the liquid line. A rubber O-ring seals the connection between the transducer and the liquid line fitting. Three terminals within a molded plastic connector receptacle on the top of the transducer connect it to the vehicle electrical system through a wire lead and connector of the headlamp and dash wire harness.

The A/C pressure transducer cannot be adjusted or repaired and, if faulty or damaged, it must be replaced.

OPERATION

The A/C pressure transducer monitors the pressures in the high side of the refrigerant system through its connection to a fitting on the liquid line. The transducer will change its internal resistance in response to the pressures it monitors. The powertrain control module (PCM) provides a five volt reference signal and a sensor ground to the transducer, then monitors the output voltage of the transducer on a sensor return circuit to determine refrigerant pressure. The PCM is programmed to respond to this and other sensor inputs by controlling the operation of the A/C compressor clutch and the radiator cooling fan to help optimize air conditioning system perfor-

mance and to protect the system components from damage. The A/C pressure transducer input to the PCM will also prevent the A/C compressor clutch from engaging when ambient temperatures are below about 4.5° C (40° F) due to the pressure/temperature relationship of the refrigerant. The Schrader-type valve in the liquid line fitting permits the A/C pressure transducer to be removed or installed without disturbing the refrigerant in the system. The A/C pressure transducer is diagnosed using a DRBIII® scan tool. Refer to Body Diagnostic Procedures.

DIAGNOSIS AND TESTING

A/C PRESSURE TRANSDUCER

The A/C pressure transducer is tested using a DRBIII® scan tool. Refer to the appropriate diagnostic information. Before testing the A/C pressure transducer, be certain that the transducer wire harness connection is clean of corrosion and properly connected. For the A/C to operate, an A/C pressure transducer voltage reading between 0.451 and 4.519 volts is required. Voltages outside this range indicate a low or high refrigerant system pressure condition to the powertrain control module (PCM). The PCM is programmed to respond to a low or high refrigerant system pressure by suppressing operation of the A/C compressor. Refer to the A/C Pressure Transducer Voltage chart for the possible conditions indicated by the transducer voltage reading.

A/C PRESSURE TRANSDUCER VOLTAGE

Voltage	Possible Indication
0.0	1. No sensor supply voltage from PCM. 2. Shorted sensor circuit. 3. Faulty transducer.
0.150 TO 0.450	1. Ambient temperature below 10° C (50° F). 2. Low refrigerant system pressure.
0.451 TO 4.519	1. Normal refrigerant system pressure.
4.520 TO 4.850	1. High refrigerant system pressure.
5.0	1. Open sensor circuit. 2. Faulty transducer.

REMOVAL

NOTE: Note: It is not necessary to discharge the refrigerant system to replace the A/C pressure transducer.

(1) Disconnect and isolate the battery negative cable.

(2) Disconnect the wire harness connector from the A/C pressure transducer (Fig. 10).

(3) Remove the A/C pressure transducer from the fitting on the liquid line.

(4) Remove the O-ring seal from the A/C pressure transducer fitting and discard.

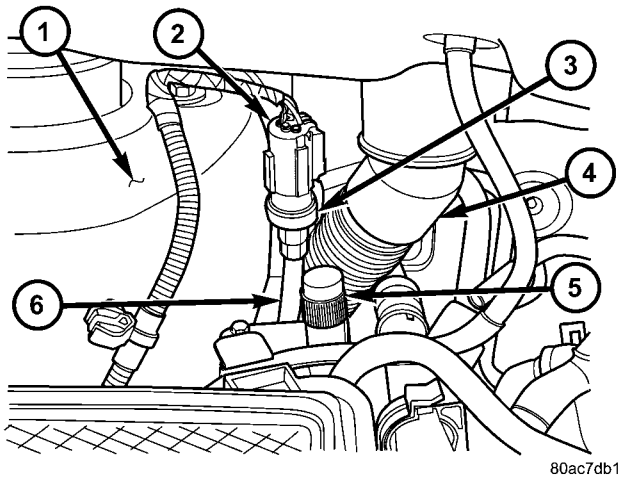

Fig. 10 A/C Pressure Transducer - Typical

1 - RIGHT FRONT STRUT TOWER
2 - WIRE HARNESS CONNECTOR
3 - A/C PRESSURE TRANSDUCER
4 - WIPER MODULE DRAIN TUBE
5 - HIGH SIDE SERVICE PORT
6 - LIQUID LINE

INSTALLATION

NOTE: Replace the O-ring seal before installing the A/C pressure transducer.

(1) Lubricate a new rubber O-ring seal with clean refrigerant oil and install it on the A/C pressure transducer fitting. Use only the specified O-rings as they are made of a special material for the R-134a system. Use only refrigerant oil of the type recommended for the A/C compressor in the vehicle.

(2) Install and tighten the A/C pressure transducer onto the fitting onto the liquid line fitting.

(3) Connect the wire harness connector to the A/C pressure transducer.

(4) Reconnect the battery negative cable.

BLEND DOOR ACTUATOR

DESCRIPTION

The blend door actuators are reversible, 12-volt Direct Current (DC), servo motors. Models with the single zone heater and air conditioner system have a single blend air door, which is controlled by a single blend door actuator. Models with the optional dual zone front heater and air conditioner system have dual blend air doors, which are controlled by two blend door actuators. The single zone blend door actuator is located on the driver's side end of the HVAC housing, close to the middle of the distribution housing. In the dual zone system, the same blend door actuator used for the single zone system becomes the passenger blend door actuator, and is mechanically connected to only the passenger side blend air door. In the dual zone system, a second separate blend door actuator is also located on the driver side end of the HVAC housing, close to the middle of the distribution housing, and is mechanically connected to only the driver's side blend air door.

The blend door actuators are interchangeable with each other, as well as with the actuators for the mode door and the recirculation air door. Each actuator is contained within an identical black molded plastic housing with an integral wire connector receptacle. Two integral mounting tabs allow the actuator to be secured with two screws to the distribution housing. Each actuator also has an identical output shaft with splines that connects it to the linkage that drives the proper blend air door. The blend door actuators do not require mechanical indexing to the blend door linkage, as they are electronically calibrated by the heater-A/C control module.

OPERATION

The blend door actuators are connected to the A/C-heater control through the vehicle electrical system by a dedicated two-wire lead and connector of the HVAC wire harness. The blend door actuator(s) can move the blend-air door(s) in two directions. When the A/C-heater control pulls the voltage on one side of the motor connection high and the other connection low, the blend-air door will move in one direction. When the A/C-heater control reverses the polarity of the voltage to the motor, the blend-air door moves in the opposite direction.

When the A/C-heater control makes the voltage to both connections high or both connections low, the blend-air door stops and will not move. The A/C-heater control uses a feedback signal positioning system to monitor the operation and relative position of the blend door actuator(s) and the blend-air door(s). The A/C-heater control learns the blend-air door stop positions during the calibration procedure and will store a diagnostic trouble code (DTC) for any problems it detects in the blend door actuator circuits.

The blend door actuators are diagnosed using a scan tool (Refer to 24 - HEATING & AIR CONDITIONING - DIAGNOSIS AND TESTING and to 24 - HVAC Electrical Diagnostics for more information).

The blend door actuators cannot be adjusted or repaired and, if faulty or damaged, they must be replaced.

REMOVAL

WARNING: ON VEHICLES EQUIPPED WITH AIRBAGS, DISABLE THE AIRBAG SYSTEM BEFORE ATTEMPTING ANY STEERING WHEEL, STEERING COLUMN, OR INSTRUMENT PANEL COMPONENT DIAGNOSIS OR SERVICE. DISCONNECT AND ISOLATE THE BATTERY NEGATIVE (GROUND) CABLE, THEN WAIT TWO MINUTES FOR THE AIRBAG SYSTEM CAPACITOR TO DISCHARGE BEFORE PERFORMING FURTHER DIAGNOSIS OR SERVICE. THIS IS THE ONLY SURE WAY TO DISABLE THE AIRBAG SYSTEM. FAILURE TO TAKE THE PROPER PRECAUTIONS COULD RESULT IN ACCIDENTAL AIRBAG DEPLOYMENT AND POSSIBLE PERSONAL INJURY.

NOTE: The single zone heating and air conditioning system is equipped with a single blend door actuator. The dual zone system has two blend door actuators, one for the driver side blend air door and one for the passenger side blend air door. The same service procedures can be used for each of these actuators.

(1) Disconnect and isolate the battery negative cable.

(2) Remove the silencer from beneath the driver side end of the instrument panel. (Refer to 23 - BODY/INSTRUMENT PANEL/INSTRUMENT PANEL SILENCER - REMOVAL).

(3) Disconnect the wire harness connector from the blend door actuator(s) (Fig. 11).

(4) Remove the two screws that secure the blend door actuator to the distribution housing.

(5) Remove the blend door actuator.

INSTALLATION

(1) Position the blend door actuator onto the distribution housing. If necessary, rotate the actuator slightly to align the splines on the actuator output shaft with those in the blend air door linkage.

(2) Install the two screws that secure the blend door actuator to the housing. Tighten the screws to 2 N·m (17 in. lbs.).

BLEND DOOR ACTUATOR (Continued)

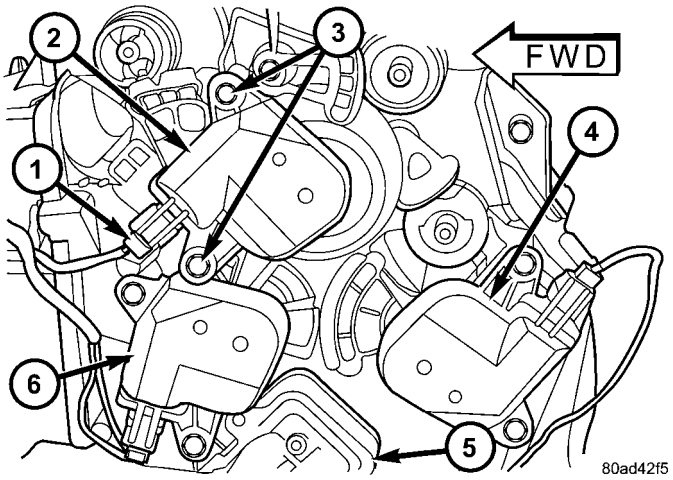

Fig. 11 Blend Door Actuator - LHD Shown, RHD Typical

1 - WIRE HARNESS CONNECTOR
2 - MODE DOOR ACTUATOR
3 - SCREW (2)
4 - DRIVER BLEND DOOR ACTUATOR (DUAL-ZONE)
5 - HEATER CORE
6 - BLEND DOOR ACTUATOR (SINGLE ZONE) OR PASSENGER BLEND DOOR ACTUATOR (DUAL-ZONE)

(3) Connect the HVAC wire harness connector to the blend door actuator.

(4) Install the silencer under the driver side end of the instrument panel (Refer to 23 - BODY/INSTRUMENT PANEL/INSTRUMENT PANEL SILENCER - INSTALLATION).

(5) Reconnect the battery negative cable.

(6) Perform the heater-A/C control calibration procedure (Refer to 24 - HEATING & AIR CONDITIONING/CONTROLS - FRONT/A/C-HEATER CONTROL - STANDARD PROCEDURE - HEATER-A/C CONTROL CALIBRATION).

BLOWER MOTOR RELAY

DESCRIPTION

The front blower motor relay is an International Standards Organization (ISO)-type relay (Fig. 12). Relays conforming to the ISO specifications have common physical dimensions, current capacities, terminal patterns, and terminal functions. The front blower motor relay is located in the integrated power module (IPM) in the engine compartment. See the fuse and relay map on the inner surface of the cover of the IPM for front blower motor relay identification and location.

The black, molded plastic case is the most visible component of the front blower motor relay. Five male spade-type terminals extend from the bottom of the base to connect the relay to the vehicle electrical system, and the ISO designation for each terminal is

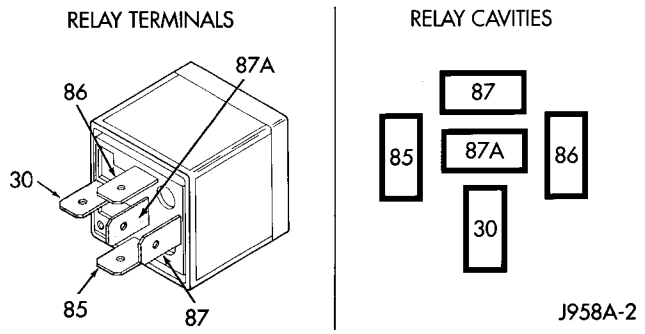

Fig. 12 Front Blower Motor Relay

molded into the base adjacent to each terminal. The ISO terminal designations are as follows:

- **30 (Common Feed)** - This terminal is connected to the movable contact point of the relay.
- **85 (Coil Ground)** - This terminal is connected to the ground feed side of the relay control coil.
- **86 (Coil Battery)** - This terminal is connected to the battery feed side of the relay control coil.
- **87 (Normally Open)** - This terminal is connected to the normally open fixed contact point of the relay.
- **87A (Normally Closed)** - This terminal is connected to the normally closed fixed contact point of the relay.

The front blower motor relay cannot be adjusted or repaired. If the relay is damaged or faulty, it must be replaced.

OPERATION

The blower motor relay is an electromechanical switch that uses a low current input from the Front Control Module (FCM) to control the high current output to the blower motor resistor (manual heater-A/C control) or blower power module (ATC control). The movable common feed contact point is held against the fixed normally closed contact point by spring pressure. When the relay coil is energized, an electromagnetic field is produced by the coil windings. This electromagnetic field draws the movable relay contact point away from the fixed normally closed contact point, and holds it against the fixed normally open contact point. When the relay coil is de-energized, spring pressure returns the movable contact point back against the fixed normally closed contact point. The resistor or diode is connected in parallel with the relay coil in the relay, and helps to dissipate voltage spikes and electromagnetic interference that can be generated as the electromagnetic field of the relay coil collapses.

BLOWER MOTOR RELAY (Continued)

The blower motor relay terminals are connected to the vehicle electrical system through a receptacle in the Integrated Power Module (IPM). The inputs and outputs of the blower motor relay include:

- The common feed terminal (30) receives a battery current input from the battery through a B(+) circuit at all times.
- The coil ground terminal (85) receives a ground input through the front/rear blower motor relay control circuit only when the FCM electronically pulls the control circuit to ground.
- The coil battery terminal (86) receives a battery current input from the battery through a B(+) circuit at all times.
- The normally open terminal (87) provides a battery current output to the blower motor resistor (manual heater-A/C control) or blower power module (automatic heater-A/C control) through a fuse in the IPM on the fused front blower motor relay output circuit only when the blower motor relay coil is energized.
- The normally closed terminal (87A) is not connected to any circuit in this application, but provides a battery current output only when the blower motor relay coil is de-energized.

Refer to the appropriate wiring information for diagnosis and testing of the micro-relay and for complete HVAC wiring diagrams.

REMOVAL

(1) Disconnect and isolate the negative battery cable.

(2) Remove the cover from the integrated power module (IPM) (Fig. 13).

NOTE: Refer to the fuse and relay map on the inner surface of the cover of the IPM for front blower motor relay identification and location.

(3) Remove the front blower motor relay from the IPM

INSTALLATION

NOTE: Refer to the fuse and relay map on the inner surface of the cover of the integrated power module (IPM) for front blower motor relay identification and location.

(1) Position the front blower motor relay to the proper receptacle in the IPM.

(2) Align the front blower motor relay terminals with the terminal cavities in the IPM receptacle.

(3) Push down firmly on the front blower motor relay until the terminals are fully seated in the terminal cavities.

(4) Install the cover onto the IPM.

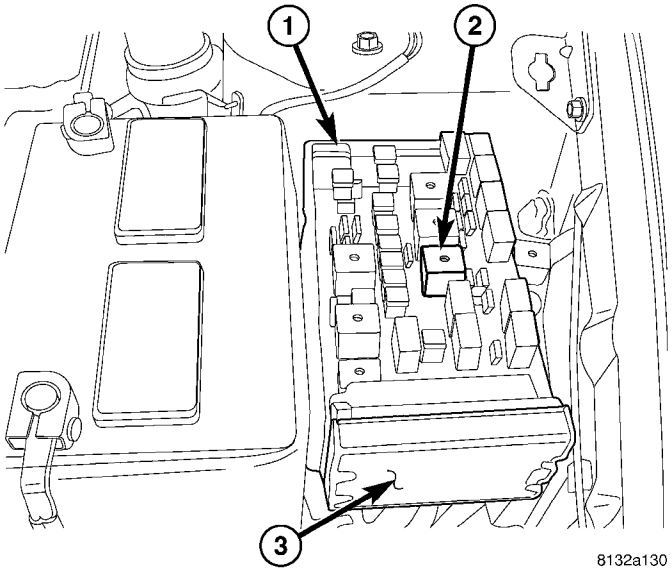

Fig. 13 Front Blower Motor Relay

1 - INTEGRATED POWER MODULE (IPM)
2 - FRONT BLOWER MOTOR RELAY
2 - FRONT CONTROL MODULE (FCM)

(5) Reconnect the negative battery cable.

BLOWER MOTOR RESISTOR BLOCK

DESCRIPTION

A blower motor resistor is used on this model when it is equipped with the manual heater-A/C system. Models equipped with the optional Automatic Temperature Control (ATC) system use a blower power module, instead of the blower motor resistor block (Refer to 24 - HEATING & AIR CONDITIONING/ CONTROLS/POWER MODULE - DESCRIPTION).

The blower motor resistor block is mounted to the rear of the HVAC housing, directly behind the glove box opening in the instrument panel. The resistor block consists of a molded plastic mounting plate with two integral connector receptacles. Concealed behind the mounting plate are four coiled resistor wires contained within a protective stamped steel cage. The blower motor resistor block is accessed for service by removing the glove box from the instrument panel.

OPERATION

The blower motor resistor block is connected to the vehicle electrical system through a dedicated take out and connector of the instrument panel wire harness. A second connector receptacle receives the pigtail wire connector from the blower motor. The blower motor resistor has multiple resistor wires,

each of which will reduce the current flow through the blower motor to change the blower motor speed. The blower motor switch in the manual heater-A/C system directs the ground path for the blower motor through the correct resistor wire to obtain the selected speed.

With the blower motor switch in the lowest speed position, the ground path for the motor is applied through all of the resistor wires. Each higher speed selected with the blower motor switch applies the blower motor ground path through fewer of the resistor wires, increasing the blower motor speed.

The blower motor resistor cannot be adjusted or repaired and, if faulty or damaged, it must be replaced.

DIAGNOSIS AND TESTING

FRONT BLOWER MOTOR RESISTOR BLOCK

WARNING: ON VEHICLES EQUIPPED WITH AIRBAGS, DISABLE THE AIRBAG SYSTEM BEFORE ATTEMPTING ANY STEERING WHEEL, STEERING COLUMN, OR INSTRUMENT PANEL COMPONENT DIAGNOSIS OR SERVICE. DISCONNECT AND ISOLATE THE BATTERY NEGATIVE (GROUND) CABLE, THEN WAIT TWO MINUTES FOR THE AIRBAG SYSTEM CAPACITOR TO DISCHARGE BEFORE PERFORMING FURTHER DIAGNOSIS OR SERVICE. THIS IS THE ONLY SURE WAY TO DISABLE THE AIRBAG SYSTEM. FAILURE TO TAKE THE PROPER PRECAUTIONS COULD RESULT IN ACCIDENTAL AIRBAG DEPLOYMENT AND POSSIBLE PERSONAL INJURY.

For circuit descriptions and diagrams, refer to the appropriate wiring information. The wiring information includes wiring diagrams, proper wire and connector repair procedures, further details on wire harness routing and retention, as well as pin-out and location views for the various wire harness connectors, splices and grounds.

(1) Disconnect and isolate the battery negative cable.

(2) Remove the glove box from the instrument panel (Refer to 23 - BODY/INSTRUMENT PANEL/ GLOVE BOX - REMOVAL).

(3) Disconnect the two wire harness connectors from the blower motor resistor block.

(4) Check for continuity between each of the blower motor switch input terminals of the resistor and the resistor output terminal. In each case there should be continuity. If OK, repair the wire harness circuits between the blower motor switch and the blower motor resistor, blower motor or blower motor relay as required. If not OK, replace the faulty blower motor resistor block.

REMOVAL

WARNING: ON VEHICLES EQUIPPED WITH AIRBAGS, DISABLE THE AIRBAG SYSTEM BEFORE ATTEMPTING ANY STEERING WHEEL, STEERING COLUMN, OR INSTRUMENT PANEL COMPONENT DIAGNOSIS OR SERVICE. DISCONNECT AND ISOLATE THE BATTERY NEGATIVE (GROUND) CABLE, THEN WAIT TWO MINUTES FOR THE AIRBAG SYSTEM CAPACITOR TO DISCHARGE BEFORE PERFORMING FURTHER DIAGNOSIS OR SERVICE. THIS IS THE ONLY SURE WAY TO DISABLE THE AIRBAG SYSTEM. FAILURE TO TAKE THE PROPER PRECAUTIONS COULD RESULT IN ACCIDENTAL AIRBAG DEPLOYMENT AND POSSIBLE PERSONAL INJURY.

WARNING: THE BLOWER MOTOR RESISTOR BLOCK MAY GET VERY HOT DURING NORMAL OPERATION. IF THE BLOWER MOTOR WAS TURNED ON PRIOR TO SERVICING THE BLOWER MOTOR RESISTOR BLOCK, WAIT FIVE MINUTES TO ALLOW THE BLOWER MOTOR RESISTORS TO COOL BEFORE PERFORMING DIAGNOSIS OR SERVICE. FAILURE TO TAKE THIS PRECAUTION CAN RESULT IN PERSONAL INJURY.

CAUTION: Do not operate the blower motor with the blower motor resistor removed from the circuit. Failure to take this precaution can result in vehicle damage.

(1) Disconnect and isolate the battery negative cable.

(2) Remove the glove box from the instrument panel (Refer to 23 - BODY/INSTRUMENT PANEL/ GLOVE BOX - REMOVAL).

(3) Disconnect the two wire harness connectors from the blower motor resistor block (Fig. 14).

(4) Remove the two screws that secure the blower motor resistor block to the HVAC housing.

(5) Remove the resistor block from the HVAC housing.

INSTALLATION

(1) Position the blower motor resistor block into the HVAC housing.

(2) Install the two screws that secure the blower motor resistor block to the HVAC housing. Tighten the screws to 2 N·m (17 in. lbs.).

(3) Connect the two wire connectors to the resistor block.

BLOWER MOTOR RESISTOR BLOCK (Continued)

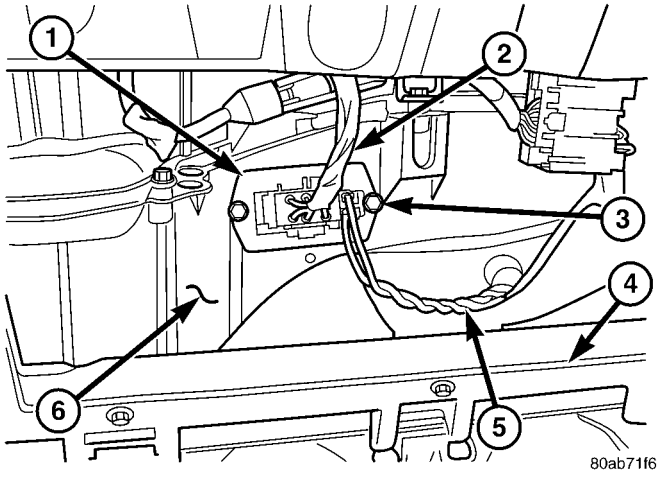

Fig. 14 Blower Motor Resistor Block - Typical

1 - BLOWER MOTOR RESISTOR
2 - INSTRUMENT PANEL WIRE HARNESS
3 - SCREW (2)
4 - GLOVE BOX OPENING REINFORCEMENT
5 - BLOWER MOTOR PIGTAIL WIRE HARNESS
6 - HVAC HOUSING

(4) Install the glove box (Refer to 23 - BODY/INSTRUMENT PANEL/GLOVE BOX - INSTALLATION).

(5) Reconnect the battery negative cable.

EVAPORATOR TEMPERATURE SENSOR

DESCRIPTION

The evaporator temperature sensor used for the manual and automatic temperature control systems on RS models is installed on the top of the HVAC housing behind the instrument panel and measures the air temperature downstream of the evaporator (Fig. 15). The sensor is an electrical thermistor in a plastic housing that is inserted into the HVAC housing. Two terminals within the molded plastic connector receptacle on the sensor connect it to the vehicle electrical system through a take out and connector of the HVAC wire harness.

The evaporator temperature sensor used for the manual and automatic temperature control systems on RG models is installed on the top of the expansion valve in the right rear corner of the engine compartment and measures the temperature of the evaporator coils (Fig. 16). The sensor has a small probe that is inserted in a small well in the body of the expansion valve that is filled with a special silicone-based thermal grease. A small molded plastic push-in retainer secures the sensor to a threaded hole in the top surface of the expansion valve. Two terminals within a molded plastic connector receptacle on the

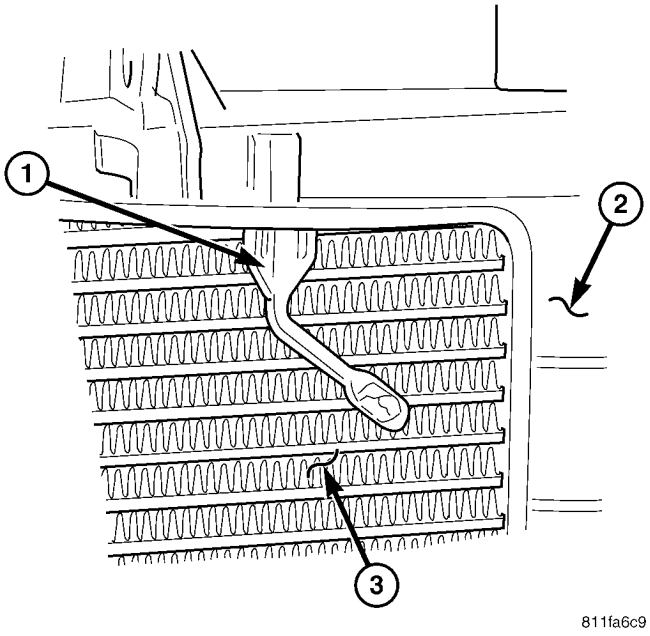

Fig. 15 Evaporator Temperature Sensor - RS Models

1 - EVAPORATOR TEMPERATURE SENSOR
2 - HVAC HOUSING
3 - A/C EVAPORATOR

sensor connect it to the vehicle electrical system through a take out and connector of the HVAC wire harness.

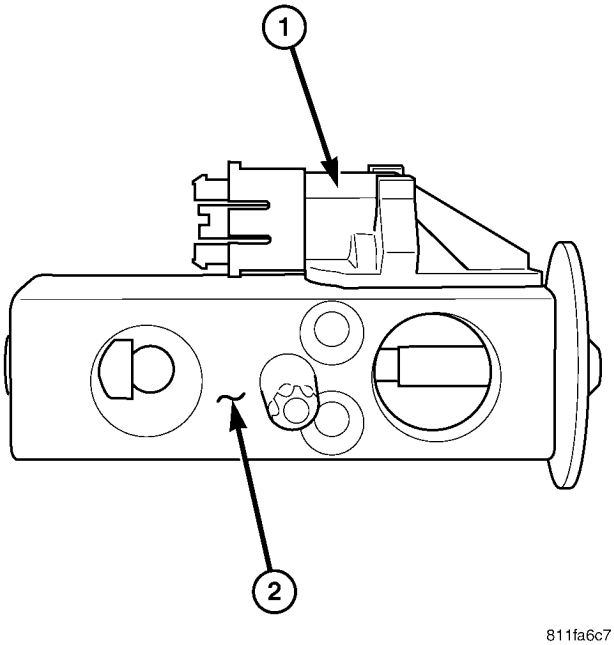

Fig. 16 Evaporator Temperature Sensor - RG Models

1 - EVAPORATOR TEMPERATURE SENSOR
2 - A/C EXPANSION VALVE

EVAPORATOR TEMPERATURE SENSOR (Continued)

The evaporator temperature sensor cannot be adjusted or repaired and, if faulty or damaged, it must be replaced.

OPERATION

The evaporator temperature sensor monitors the temperature of the conditioned air once it passes through the A/C evaporator. The evaporator temperature sensor will change its internal resistance in response to the air temperatures it monitors and is connected to the A/C-heater control through sensor ground and signal circuits. As the conditioned air temperature increases, the resistance of the evaporator temperature sensor decreases and the voltage monitored by the A/C-heater control decreases. The external location of the evaporator temperature sensor allows the sensor to be removed or installed without disturbing the refrigerant in the A/C system.

The A/C-heater control uses this monitored voltage reading as an indication of the evaporator temperature. The A/C-heater control is programmed to respond to this input by sending electronic messages to the powertrain control module (PCM) over the controller area network (CAN) data bus. The PCM then cycles the A/C compressor clutch as necessary to optimize A/C system performance and to protect the A/C system from evaporator freezing.

The evaporator temperature sensor cannot be adjusted or repaired and, if faulty or damaged, it must be replaced.

The evaporator temperature sensor is diagnosed using the DRBIII® scan tool. Refer to Body Diagnostic Procedures.

REMOVAL

RG MODELS

(1) Disconnect and isolate the battery negative cable.

(2) Remove the air cleaner housing from the right side of the engine compartment.

(3) Remove the windshield wiper assembly from the vehicle (Refer to 8 - ELECTRICAL/WIPERS/WASHERS/WIPER MODULE - REMOVAL).

(4) Remove the temperature sensor retainer from the expansion valve (Fig. 17).

(5) Pull the evaporator temperature sensor away from the expansion valve far enough to access the red release ring on the wiring connector. Push the red ring toward the connector to release the lock and disconnect the wire harness connector from the temperature sensor.

(6) Remove the evaporator temperature sensor from the engine compartment.

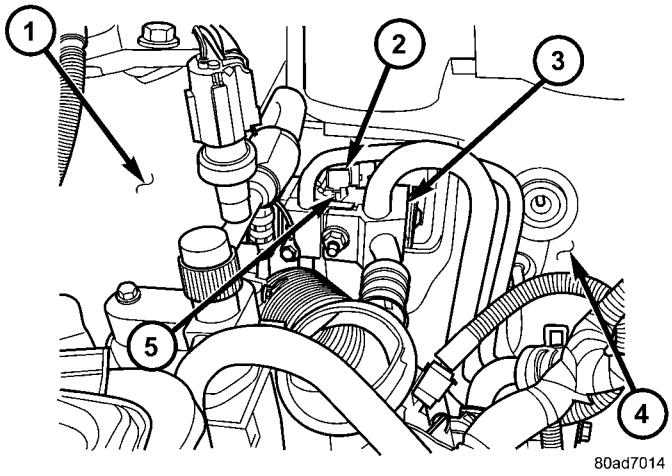

Fig. 17 Evaporator Temperature Sensor - RG Models

1 - RIGHT FRONT STRUT TOWER
2 - EVAPORATOR TEMPERATURE SENSOR
3 - EXPANSION VALVE
4 - DASH PANEL
5 - RETAINER

RS MODELS

(1) Disconnect and isolate the negative battery cable.

(2) Remove the instrument panel from the vehicle (Refer to 23 - BODY/INSTRUMENT PANEL/INSTRUMENT PANEL ASSEMBLY - REMOVAL).

(3) Disconnect the wire harness connector from the evaporator temperature sensor located on the top of the HVAC housing (Fig. 18).

(4) Remove the evaporator temperature sensor from the HVAC housing.

INSTALLATION

RG MODELS

NOTE: Any grease removed with the evaporator temperature sensor must be replaced. Failure to do so could result in poor A/C performance.

(1) Position the evaporator temperature sensor into the right rear corner of the engine compartment.

(2) Reconnect the wire harness connector to the evaporator temperature sensor.

(3) Position the evaporator temperature sensor onto the top of the expansion valve with the sensor probe inserted into the well in the expansion valve.

(4) Install the temperature sensor retainer.

(5) Install the window wiper module (Refer to 8 - ELECTRICAL/WIPERS/WASHERS/WIPER MODULE - INSTALLATION).

(6) Reinstall the air cleaner housing into the right side of the engine compartment.

(7) Reconnect the battery negative cable.

EVAPORATOR TEMPERATURE SENSOR (Continued)

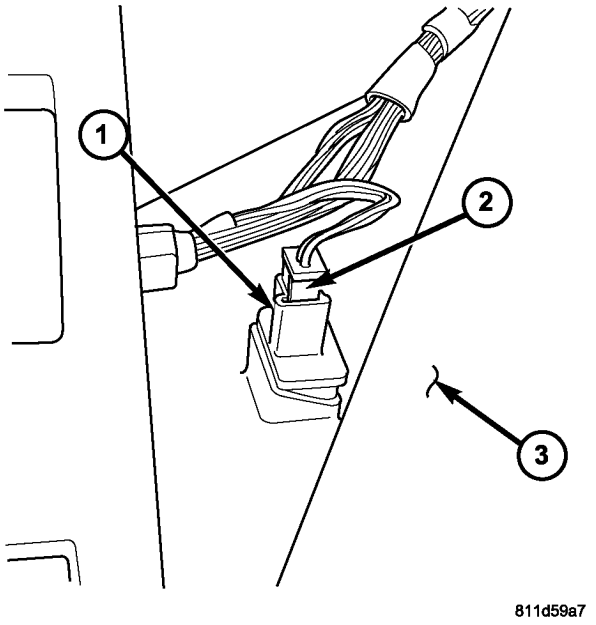

Fig. 18 Evaporator Temperature Sensor - RS Models

1 - EVAPORATOR TEMPERATURE SENSOR
2 - WIRE HARNESS CONNECTOR
3 - HVAC HOUSING

(8) Run the HVAC Cool Down test to verify system is operating properly (Refer to 24 - HEATING & AIR CONDITIONING - DIAGNOSIS AND TESTING).

RS MODELS

(1) Install the evaporator temperature sensor into the top of the HVAC housing.

(2) Connect the wire harness connector to the evaporator temperature sensor.

(3) Install the instrument panel (Refer to 23 - BODY/INSTRUMENT PANEL/INSTRUMENT PANEL ASSEMBLY - INSTALLATION).

(4) Reconnect the negative battery cable.

INFRARED TEMPERATURE SENSOR

DESCRIPTION

The infrared temperature sensor consists of two infrared transducers that are concealed behind a clear lens located near the bottom of the center panel outlet near the top of the instrument panel center bezel (Fig. 19). These sensors are used only on models equipped with the optional automatic temperature control (ATC) heating-A/C system. A molded plastic connector receptacle on the bottom of the panel outlet unit is concealed behind the center bezel. A short, dedicated jumper wire harness routed behind the center bezel connects the sensors directly to the ATC A/C-heater control module near the bottom of the center bezel. The infrared temperature sensor is integral to the center bezel panel outlet unit. The infrared sensors cannot be adjusted or repaired and, if faulty or damaged, the center bezel must be replaced.

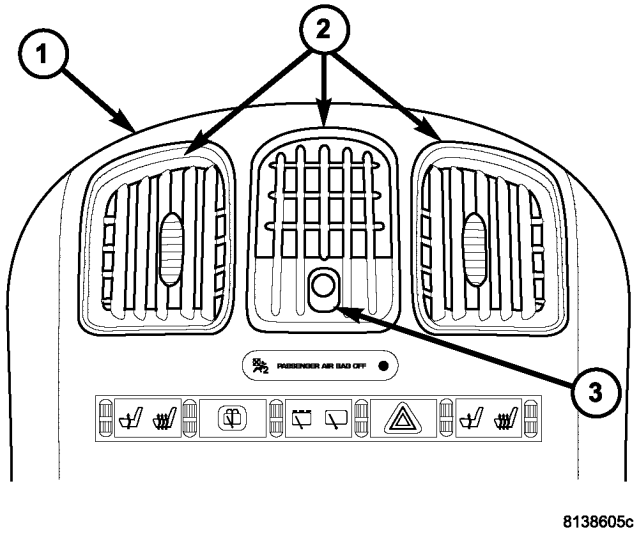

Fig. 19 Infrared Temperature Sensor – RS shown, RG typical

1 - INSTRUMENT PANEL CENTER BEZEL
2 - CENTER IP AIR OUTLETS
3 - INFRARED TEMPERATURE SENSOR

OPERATION

The dual infrared temperature sensors provide independent measurement inputs to the Automatic Temperature Control (ATC) heater-A/C control module that indicates the surface temperature of the driver seat and front seat passenger seat occupants. By using a surface temperature measurement, rather than an air temperature measurement, the ATC system is able to adjust itself to the comfort level as perceived by the occupant. This allows the system to detect and compensate for other ambient conditions affecting comfort levels, such as solar heat gain or evaporative heat loss. The ATC system logic responds to the infrared sensor inputs by calculating and adjusting the air flow temperature and air flow rate needed to properly obtain and maintain the individually selected comfort level temperatures of both the driver and passenger seat occupants. The ATC heater-A/C control module continually monitors the infrared sensor circuits, and will store a Diagnostic Trouble Code (DTC) for any problem it detects. This DTC information can be retrieved and the infrared temperature sensor diagnosed using a DRBIII® scan tool. Refer to Body Diagnostic Procedures.

MODE DOOR ACTUATOR

DESCRIPTION

The mode door actuator is a reversible, 12-volt Direct Current (DC), servo motor. The single mode door actuator is located on the driver's side end of the HVAC housing, close to the top of the distribution housing. The mode door actuator is mechanically connected to the mode door.

The mode door actuator is interchangeable with the actuators for the blend air door(s) and the recirculation air door. Each actuator is contained within an identical black molded plastic housing with an integral wire connector receptacle. Two integral mounting tabs allow the actuator to be secured with two screws to the distribution housing. Each actuator also has an identical output shaft with splines that connects it to the linkage that drives the mode door. The mode door actuator does not require mechanical indexing to the mode door linkage, as it is electronically calibrated by the heater-A/C control module.

OPERATION

The mode door actuator is connected to the A/C-heater control through the vehicle electrical system by a dedicated two-wire lead and connector from the HVAC wire harness. The mode door actuator can move the mode door in two directions. When the A/C-heater control pulls the voltage on one side of the motor connection high and the other connection low, the mode door will move in one direction. When the A/C-heater control reverses the polarity of the voltage to the motor, the mode door moves in the opposite direction. When the A/C-heater control makes the voltage to both connections high or both connections low, the mode door stops and will not move. These same motor connections also provide a feedback signal to the A/C-heater control. This feedback signal allows the A/C-heater control to monitor the operation and relative position of the mode door actuator and the mode door. The A/C-heater control learns the mode door stop positions during the calibration procedure and will store a diagnostic trouble code (DTC) for any problems it detects in the mode door actuator circuits.

The mode door actuator can be diagnosed using a DRBIII® scan tool. Refer to Body Diagnostic Procedures for more information. The mode door actuator cannot be adjusted or repaired and, if damaged or faulty, it must be replaced.

REMOVAL

WARNING: ON VEHICLES EQUIPPED WITH AIRBAGS, DISABLE THE AIRBAG SYSTEM BEFORE ATTEMPTING ANY STEERING WHEEL, STEERING COLUMN, OR INSTRUMENT PANEL COMPONENT DIAGNOSIS OR SERVICE. DISCONNECT AND ISOLATE THE BATTERY NEGATIVE (GROUND) CABLE, THEN WAIT TWO MINUTES FOR THE AIRBAG SYSTEM CAPACITOR TO DISCHARGE BEFORE PERFORMING FURTHER DIAGNOSIS OR SERVICE. THIS IS THE ONLY SURE WAY TO DISABLE THE AIRBAG SYSTEM. FAILURE TO TAKE THE PROPER PRECAUTIONS COULD RESULT IN ACCIDENTAL AIRBAG DEPLOYMENT AND POSSIBLE PERSONAL INJURY.

(1) Disconnect and isolate the battery negative cable.

(2) Remove the silencer from beneath the driver side end of the instrument panel (Refer to 23 - BODY/INSTRUMENT PANEL/INSTRUMENT PANEL SILENCER - REMOVAL).

(3) Disconnect the wire harness connector from the mode door actuator (Fig. 20).

(4) Remove the two screws that secure the mode door actuator to the HVAC distribution housing.

(5) Remove the mode door actuator from the distribution housing.

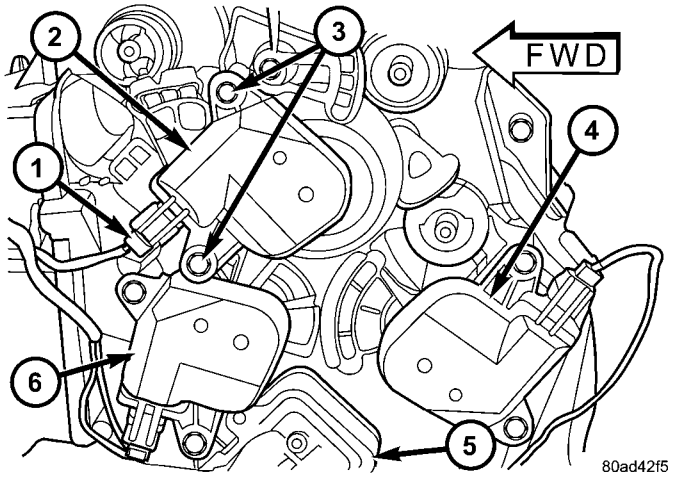

Fig. 20 Mode Door Actuator - LHD Shown, RHD Typical

1 - WIRE HARNESS CONNECTOR
2 - MODE DOOR ACTUATOR
3 - SCREW (2)
4 - DRIVER BLEND DOOR ACTUATOR (DUAL-ZONE)
5 - HEATER CORE
6 - BLEND DOOR ACTUATOR (SINGLE ZONE) OR PASSENGER BLEND DOOR ACTUATOR (DUAL-ZONE)

MODE DOOR ACTUATOR (Continued)

INSTALLATION

(1) Position the mode door actuator onto the HVAC distribution housing. If necessary, rotate the actuator slightly to align the splines on the actuator output shaft with those in the mode door linkage.

(2) Install the two screws that secure the mode door actuator to the distribution housing. Tighten the screws to 2 N·m (17 in. lbs.).

(3) Connect the wire harness connector to the mode door actuator.

(4) Install the silencer under the driver side end of the instrument panel (Refer to 23 - BODY/INSTRUMENT PANEL/INSTRUMENT PANEL SILENCER - INSTALLATION).

(5) Reconnect the negative battery cable.

(6) Perform the A/C-heater control calibration procedure (Refer to 24 - HEATING & AIR CONDITIONING/CONTROLS - FRONT/A/C-HEATER CONTROL - STANDARD PROCEDURE - HEATER-A/C CONTROL CALIBRATION).

POWER MODULE - BLOWER MOTOR

DESCRIPTION

A blower motor power module is used on this model when it is equipped with the optional Automatic Temperature Control (ATC) system. Models equipped with the standard manual heater-A/C system use a blower motor resistor block, instead of the blower motor power module (Refer to 24 - HEATING & AIR CONDITIONING/CONTROLS/BLOWER MOTOR RESISTOR BLOCK - DESCRIPTION).

The blower motor power module is mounted to the rear of the HVAC housing, directly behind the glove box opening in the instrument panel. The module consists of a molded plastic mounting plate with two integral connector receptacles. Concealed behind the mounting plate is the power module electronic circuitry and a large finned, heat sink. The blower motor power module is accessed for service by removing the glove box from the instrument panel.

OPERATION

The blower motor power module is connected to the vehicle electrical system through a dedicated lead and connector from the instrument panel wire harness. A second connector receptacle receives a wire lead connector from the blower motor. The blower motor power module allows the microprocessor-based Automatic Temperature Control (ATC) heater-A/C control module to calculate and provide infinitely variable blower motor speeds based upon either manual blower switch input or the ATC programming using a Pulse Width Modulated (PWM) circuit strategy. The PWM voltage is applied to a comparator circuit which compares the PWM signal voltage to the blower motor feedback voltage. The resulting output drives the power module circuitry, which adjusts the voltage output received from the blower motor relay to change or maintain the desired blower speed. The blower motor power module is diagnosed using a DRBIII® scan tool. Refer to Body Diagnostic Procedures.

REMOVAL

WARNING: ON VEHICLES EQUIPPED WITH AIRBAGS, DISABLE THE AIRBAG SYSTEM BEFORE ATTEMPTING ANY STEERING WHEEL, STEERING COLUMN, OR INSTRUMENT PANEL COMPONENT DIAGNOSIS OR SERVICE. DISCONNECT AND ISOLATE THE BATTERY NEGATIVE (GROUND) CABLE, THEN WAIT TWO MINUTES FOR THE AIRBAG SYSTEM CAPACITOR TO DISCHARGE BEFORE PERFORMING FURTHER DIAGNOSIS OR SERVICE. THIS IS THE ONLY SURE WAY TO DISABLE THE AIRBAG SYSTEM. FAILURE TO TAKE THE PROPER PRECAUTIONS COULD RESULT IN ACCIDENTAL AIRBAG DEPLOYMENT AND POSSIBLE PERSONAL INJURY.

WARNING: THE HEAT SINK FOR THE BLOWER MOTOR POWER MODULE MAY GET VERY HOT DURING NORMAL OPERATION. IF THE BLOWER MOTOR WAS TURNED ON PRIOR TO SERVICING THE BLOWER MOTOR POWER MODULE, WAIT FIVE MINUTES TO ALLOW THE HEAT SINK TO COOL BEFORE PERFORMING DIAGNOSIS OR SERVICE. FAILURE TO TAKE THIS PRECAUTION CAN RESULT IN PERSONAL INJURY.

POWER MODULE - BLOWER MOTOR (Continued)

(1) Disconnect and isolate the negative battery cable.

(2) Remove the glove box from the instrument panel (Refer to 23 - BODY/INSTRUMENT PANEL/GLOVE BOX - REMOVAL).

(3) Disconnect the two wire harness connectors from the blower motor power module (Fig. 21).

(4) Remove the two screws that secure the blower motor power module to the HVAC housing.

(5) Remove the blower motor power module from the HVAC housing.

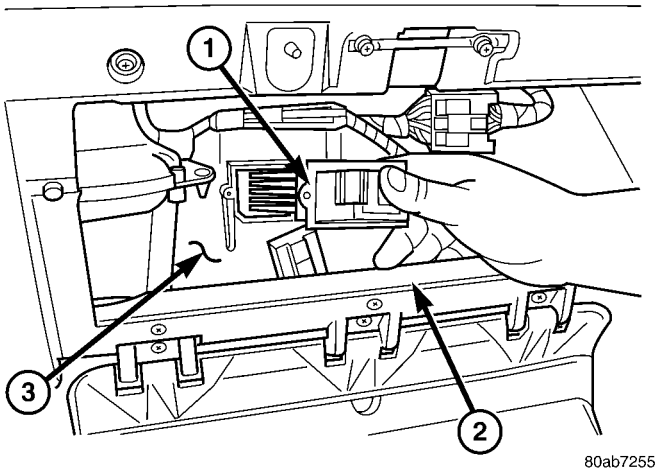

Fig. 21 Blower Motor Power Module - Typical

1 - POWER MODULE
2 - LOWER GLOVE BOX OPENING REINFORCEMENT
3 - HVAC HOUSING

INSTALLATION

(1) Position the blower motor power module into the HVAC housing.

(2) Install the two screws that secure the blower motor power module to the HVAC housing. Tighten the screws to 2 N·m (17 in. lbs.).

(3) Connect the two wire connectors to the blower motor power module.

(4) Install the glove box (Refer to 23 - BODY/INSTRUMENT PANEL/GLOVE BOX - INSTALLATION).

(5) Reconnect the negative battery cable.

RECIRCULATION DOOR ACTUATOR

DESCRIPTION

The recirculation door actuator is a reversible, 12-volt direct current (DC), servo motor. The single recirculation door actuator is located on the passenger side end of the HVAC housing, on the air inlet housing. The recirculation door actuator is mechanically connected to the recirculation-air door. The recirculation door actuator is interchangeable with the actuators for the blend-air door(s) and the mode door. Each actuator is contained within an identical black molded plastic housing with an integral wire connector receptacle. Two integral mounting tabs allow the actuator to be secured with two screws to the air inlet housing. Each actuator also has an identical output shaft with splines that connects it to the linkage that drives the recirculation-air door. The recirculation door actuator does not require mechanical indexing to the recirculation-air door, as it is electronically calibrated by the A/C-heater control.

OPERATION

The recirculation door actuator is connected to the heater-A/C control module through the vehicle electrical system by a dedicated two-wire lead and connector of the HVAC wire harness. The recirculation door actuator can move the recirculation-air door in two directions. When the A/C-heater control pulls the voltage on one side of the motor connection high and the other connection low, the recirculation-air door will move in one direction.

When the A/C-heater control makes the voltage to both connections high or both connections low, the recirculation-air door stops and will not move. The A/C-heater control uses a feedback signal positioning system to monitor the operation and relative position of the recirculation door actuator and the recirculation-air door. The A/C-heater control learns the recirculation-air door stop positions during the calibration procedure and will store a diagnostic trouble code (DTC) for any problems it detects in the recirculation door actuator circuits.

The recirculation door actuator is diagnosed using a scan tool (Refer to 24 - HEATING & AIR CONDITIONING - DIAGNOSIS AND TESTING and to 24 - HVAC Electrical Diagnostics for more information).

The recirculation door actuator cannot be adjusted or repaired and, if faulty or damaged, it must be replaced.

RECIRCULATION DOOR ACTUATOR (Continued)

REMOVAL

WARNING: ON VEHICLES EQUIPPED WITH AIRBAGS, DISABLE THE AIRBAG SYSTEM BEFORE ATTEMPTING ANY STEERING WHEEL, STEERING COLUMN, OR INSTRUMENT PANEL COMPONENT DIAGNOSIS OR SERVICE. DISCONNECT AND ISOLATE THE BATTERY NEGATIVE (GROUND) CABLE, THEN WAIT TWO MINUTES FOR THE AIRBAG SYSTEM CAPACITOR TO DISCHARGE BEFORE PERFORMING FURTHER DIAGNOSIS OR SERVICE. THIS IS THE ONLY SURE WAY TO DISABLE THE AIRBAG SYSTEM. FAILURE TO TAKE THE PROPER PRECAUTIONS COULD RESULT IN ACCIDENTAL AIRBAG DEPLOYMENT AND POSSIBLE PERSONAL INJURY.

(1) Disconnect and isolate the battery negative cable.

(2) Pull the carpet on the passenger side front floor away from the dash panel far enough to access the recirculation door actuator.

(3) Disconnect the HVAC wire harness connector from the recirculation door actuator (Fig. 22).

(4) Remove the two screws that secure the recirculation door actuator to the air inlet housing.

(5) Remove the recirculation door actuator from the air inlet housing.

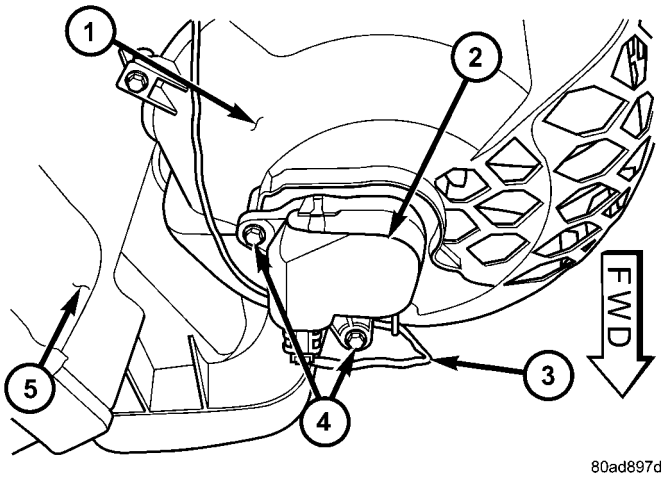

Fig. 22 Recirculation Door Actuator - LHD Shown, RHD Typical

1 - AIR INLET HOUSING
2 - RECIRCULATION DOOR ACTUATOR
3 - HVAC WIRE HARNESS
4 - SCREW (2)
5 - LOWER HVAC HOUSING

INSTALLATION

(1) Position the recirculation door actuator onto the air intake housing. If necessary, rotate the actuator slightly to align the splines on the actuator output shaft with those in the recirculation air door.

(2) Install the two screws that secure the recirculation door actuator to the air intake housing. Tighten the screws to 2 N·m (17 in. lbs.).

(3) Connect the HVAC wire harness connector to the recirculation door actuator.

(4) Reposition the carpet on the passenger side front floor back up to the dash panel.

(5) Reconnect the battery negative cable.

(6) Perform the heater-A/C control calibration procedure (Refer to 24 - HEATING & AIR CONDITIONING/CONTROLS - FRONT/A/C-HEATER CONTROL - STANDARD PROCEDURE - HEATER-A/C CONTROL CALIBRATION).

CONTROLS - REAR

TABLE OF CONTENTS

page

A/C-HEATER CONTROL
DESCRIPTION 33
OPERATION 33
REMOVAL 33
INSTALLATION 34
BLEND DOOR ACTUATOR
DESCRIPTION 34
OPERATION 35
REMOVAL 35
INSTALLATION 35
BLOWER MOTOR RELAY
DESCRIPTION 36
OPERATION 36
REMOVAL 37
INSTALLATION 37
BLOWER MOTOR RESISTOR BLOCK
DESCRIPTION 37
OPERATION 37
DIAGNOSIS AND TESTING
REAR BLOWER MOTOR RESISTOR BLOCK 38
REMOVAL 38
INSTALLATION 39
MODE DOOR ACTUATOR - REAR
DESCRIPTION 39
OPERATION 39
REMOVAL 39
INSTALLATION 40
POWER MODULE - REAR BLOWER MOTOR
DESCRIPTION 40
OPERATION 40
REMOVAL 41
INSTALLATION 41

A/C-HEATER CONTROL

DESCRIPTION

The rear heating-A/C system is controlled by rotary-type blower motor and temperature controls, centrally mounted directly into the headliner, or if equipped with the available DVD player, located in the player housing. The rear A/C-heater control allows selection of three blower motor speeds and an Off position when the center knob on the front A/C-heater control is set to the Rear position, otherwise the front unit controls both front and rear heater-A/C operation.

OPERATION

With the rear A/C-heater control active, temperature selection dictates the air distribution mode (floor or overhead air) of the rear unit. A cool temperature setting directs flow to the overhead outlets and a warm temperature setting to the floor. Refer to Body Diagnostic Procedures for further diagnostic information.

REMOVAL

(1) Disconnect and isolate the negative battery cable.

(2) If the rear A/C-heater control is mounted in the headliner, use a trim stick or another suitable wide flat bladed tool and gently pry the top edge of the control bezel away from the headliner far enough to release the two snap clip retainers (Fig. 1).

(3) Pull the rear A/C-heater control and bezel assembly rearward far enough to access the wire harness connector on the back of the control.

(4) Disconnect the wire harness connector from the rear A/C-heater control.

(5) Remove the rear A/C-heater control and bezel assembly from the headliner.

(6) If the rear A/C-heater control is mounted in the video screen housing, remove the housing from the headliner (Refer to 8 - ELECTRICAL/AUDIO/VIDEO SCREEN - REMOVAL).

(7) Remove the three screws that secure the rear A/C-heater control to the bezel or video screen housing, depending on application and remove the control (Fig. 2).

A/C-HEATER CONTROL (Continued)

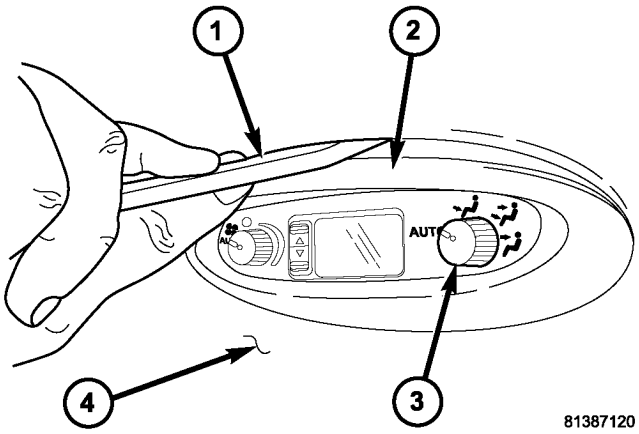

Fig. 1 A/C-Heater Control - Rear

1 - TRIM STICK
2 - BEZEL
3 - REAR A/C-HEATER CONTROL
4 - HEADLINER

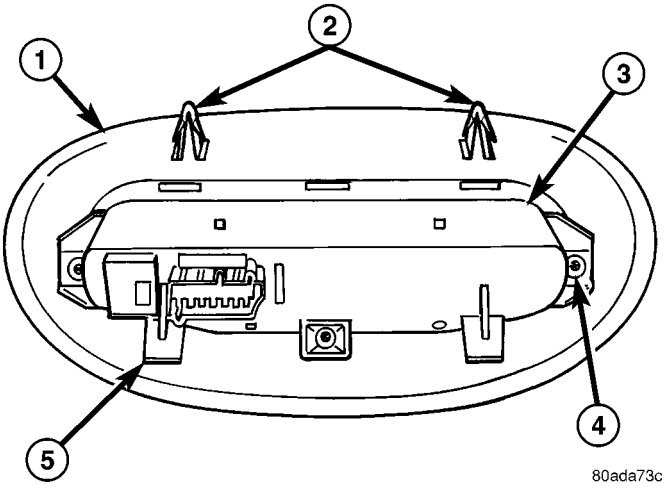

Fig. 2 Heater-A/C Control Bezel

1 - BEZEL/VIDEO SCREEN HOUSING (AS EQUIPPED)
2 - SNAP CLIP (2)
3 - REAR A/C-HEATER CONTROL
4 - SCREW (3)
5 - BEZEL LOCATOR TAB (2)

INSTALLATION

(1) Position the rear A/C-heater control onto the bezel or video screen housing, depending on application.

(2) Install the three screws that secure the rear A/C-heater control to the bezel or video screen housing. Tighten the screws to 2 N·m (17 in. lbs.).

(3) If the rear A/C-heater control is to be mounted into the headliner, position the rear A/C-heater control near the headliner and connect the wire harness connector to the rear of the control.

(4) Insert the locator tabs on the back of the rear control bezel over the forward edge of the headliner opening.

(5) Slide the rear A/C-heater control bezel forward far enough to align the snap clips on the bezel with the receptacles on the headliner and by using hand pressure, press the top edge of the bezel upward until the two snap clips fully seat into their receptacles.

(6) If the rear A/C-heater control is mounted to the video screen housing, install the video screen to the headliner (Refer to 8 - ELECTRICAL/AUDIO/VIDEO SCREEN - INSTALLATION).

(7) Reconnect the negative battery cable.

(8) Using the DRB-III® scan tool, reset the Rear Temperature Selector calibration values.

(9) Verify that the Actuator Calibration of the Front Control has passed. If an Actuator Calibration has not passed correct any errors before proceeding further.

(10) Rotate the Rear Temperature Selector counter clockwise to the Cold Position, allow the Selector to remain in the Cold Position for 5 seconds.

(11) Rotate the Rear Temperature Selector Clockwise to the Hot Position, allow the Selector to remain in the Cold Position for 5 seconds.

(12) Calibration is now complete.

BLEND DOOR ACTUATOR

DESCRIPTION

The rear blend door actuator is a reversible, 12-volt Direct Current (DC), servo motor. The single blend door actuator is located on the outboard side of the rear HVAC housing, below the mode door actuator. The blend door actuator is mechanically connected to the blend air door.

The rear blend door actuator is interchangeable with the actuator for the mode door. Each actuator is contained within an identical black molded plastic housing with an integral wire connector receptacle. Two integral mounting tabs allow the actuator to be secured with two screws to the rear HVAC housing. Each actuator also has an identical output shaft with splines that connects it to the pivot or linkage of the proper door. The rear blend door actuator does not require mechanical indexing to the blend air door pivot, as it is electronically calibrated by the front heater-A/C control module.

BLEND DOOR ACTUATOR (Continued)

OPERATION

The rear blend door actuator is connected to the front heater-A/C control module through the vehicle electrical system by a dedicated two-wire take out and connector of the rear HVAC wire harness. The blend door actuator can move the blend air door in two directions. When the front heater-A/C control module pulls the voltage on one side of the motor connection high and the other connection low, the blend air door will move in one direction. When the module reverses the polarity of the voltage to the motor, the blend air door moves in the opposite direction. When the module makes the voltage to both connections high or both connections low, the blend air door stops and will not move. These same motor connections also provide a feedback signal to the front heater-A/C control module. This feedback signal allows the module to monitor the operation and relative positions of the blend door actuator and the blend air door. The front heater-A/C control module learns the blend air door stop positions during the calibration procedure and will store a Diagnostic Trouble Code (DTC) for any problems it detects in the blend door actuator circuits.

The rear blend door actuator can be diagnosed using a DRBIII® scan tool. Refer to Body Diagnostic Procedures for more information. The rear blend door actuator cannot be adjusted or repaired and, if damaged or faulty, it must be replaced.

REMOVAL

(1) Disconnect and isolate the battery negative cable.

(2) Remove the right quarter trim panel and right D-pillar trim panel from the quarter inner panel (Refer to 23 - BODY/INTERIOR/QUARTER TRIM PANEL - REMOVAL).

(3) Remove the two screws that secure the top of the quarter trim panel attaching bracket to the quarter inner panel.

(4) Remove the screw that secures the back of the rear HVAC housing to the right D-pillar.

(5) Remove the screw that secures the front of the rear HVAC housing to the right quarter inner panel.

(6) Carefully pull the top of the rear HVAC housing away from the right quarter inner panel far enough to reach between the rear HVAC housing and the quarter inner panel to access the blend door actuator (Fig. 3).

(7) Remove the two screws that secure the blend door actuator to the rear HVAC housing.

(8) Pull the blend door actuator away from the rear HVAC housing far enough to disengage the actuator output shaft from the rear blend door pivot.

(9) Raise the blend door actuator far enough to access and disconnect the rear HVAC wire harness connector from the actuator.

(10) Remove the rear blend door actuator from between the rear HVAC housing and the quarter inner panel.

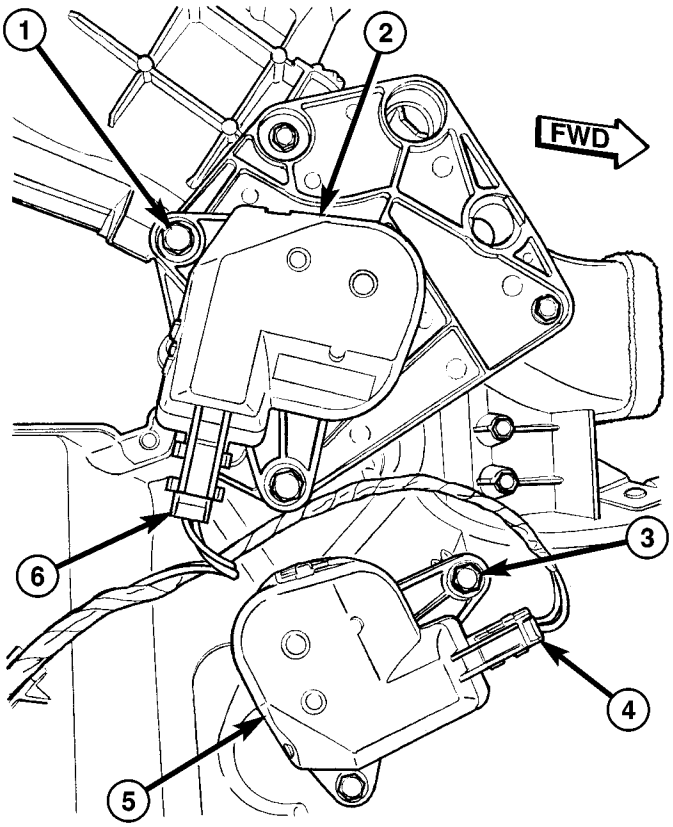

Fig. 3 Rear HVAC Mode Door Actuator

1 - SCREW (2)
2 - MODE DOOR ACTUATOR
3 - SCREW (2)
4 - CONNECTOR
5 - BLEND DOOR ACTUATOR
6 - WIRE HARNESS CONNECTOR

INSTALLATION

(1) Position the blend door actuator between the rear HVAC housing and the quarter inner panel.

(2) Connect the rear HVAC wire harness connector to the rear blend door actuator.

(3) Position the rear blend door actuator onto the rear HVAC housing. If necessary, rotate the actuator slightly to align the splines on the actuator output shaft with those in the blend air door pivot.

(4) Install the two screws that secure the rear blend door actuator to the rear HVAC housing. Tighten the screws to 2 N·m (17 in. lbs.).

(5) Push the top of the rear HVAC housing back into position against the right quarter inner panel.

BLEND DOOR ACTUATOR (Continued)

(6) Install the screw that secures the front of the rear HVAC housing to the right quarter inner panel. Tighten the screw to 11 N·m (97 in. lbs.).

(7) Install the screw that secures the back of the rear HVAC housing to the right D-pillar. Tighten the screw to 11 N·m (97 in. lbs.).

(8) Install the two screws that secure the top of the quarter trim panel attaching bracket to the quarter inner panel. Tighten the screws to 2 N·m (17 in. lbs.).

(9) Reinstall the right quarter trim panel and right D-pillar trim panel onto the quarter inner panel (Refer to 23 - BODY/INTERIOR/QUARTER TRIM PANEL - INSTALLATION).

(10) Reconnect the battery negative cable.

(11) Perform the heater-A/C control calibration procedure (Refer to 24 - HEATING & AIR CONDITIONING/CONTROLS - FRONT/A/C-HEATER CONTROL - STANDARD PROCEDURE - HEATER-A/C CONTROL CALIBRATION).

BLOWER MOTOR RELAY

DESCRIPTION

The rear blower motor relay is a International Standards Organization (ISO)-type relay (Fig. 4). Relays conforming to the ISO specifications have common physical dimensions, current capacities, terminal patterns, and terminal functions. The rear blower motor relay is located in the integrated power module (IPM) in the engine compartment. See the fuse and relay map on the inner surface of the cover of the IPM for rear blower motor relay identification and location.

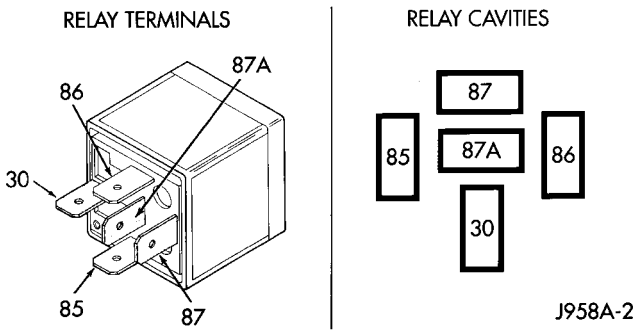

Fig. 4 Rear Blower Motor Relay

The black, molded plastic case is the most visible component of the rear blower motor relay. Five male spade-type terminals extend from the bottom of the base to connect the relay to the vehicle electrical system, and the ISO designation for each terminal is molded into the base adjacent to each terminal. The ISO terminal designations are as follows:

- **30 (Common Feed)** - This terminal is connected to the movable contact point of the relay.
- **85 (Coil Ground)** - This terminal is connected to the ground feed side of the relay control coil.
- **86 (Coil Battery)** - This terminal is connected to the battery feed side of the relay control coil.
- **87 (Normally Open)** - This terminal is connected to the normally open fixed contact point of the relay.
- **87A (Normally Closed)** - This terminal is connected to the normally closed fixed contact point of the relay.

The rear blower motor relay cannot be adjusted or repaired. If the relay is damaged or faulty, it must be replaced.

OPERATION

The rear blower motor relay is an electromechanical switch that uses a low current input from the Front Control Module (FCM) to control the high current output to the rear blower motor resistor (manual heater-A/C control) or rear blower motor power module (ATC heater-A/C control). The movable common feed contact point is held against the fixed normally closed contact point by spring pressure. When the relay coil is energized, an electromagnetic field is produced by the coil windings. This electromagnetic field draws the movable relay contact point away from the fixed normally closed contact point, and holds it against the fixed normally open contact point. When the relay coil is de-energized, spring pressure returns the movable contact point back against the fixed normally closed contact point. The resistor or diode is connected in parallel with the relay coil in the relay, and helps to dissipate voltage spikes and electromagnetic interference that can be generated as the electromagnetic field of the relay coil collapses.

The rear blower motor relay terminals are connected to the vehicle electrical system through a receptacle in the Integrated Power Module (IPM). The inputs and outputs of the rear blower motor relay include:

- The common feed terminal (30) receives a battery current input from the battery through a B(+) circuit at all times.
- The coil ground terminal (85) receives a ground input through the front/rear blower motor relay control circuit only when the FCM electronically pulls the control circuit to ground.
- The coil battery terminal (86) receives a battery current input from the battery through a B(+) circuit at all times.

BLOWER MOTOR RELAY (Continued)

- The normally open terminal (87) provides a battery current output to the blower motor resistor (manual heater-A/C control) or blower power module (ATC heater-A/C control) through a fuse in the IPM on the fused rear blower motor relay output circuit only when the blower motor relay coil is energized.
- The normally closed terminal (87A) is not connected to any circuit in this application, but provides a battery current output only when the rear blower motor relay coil is de-energized.

Refer to the appropriate wiring information for diagnosis and testing of the micro-relay and for complete HVAC wiring diagrams.

REMOVAL

(1) Disconnect and isolate the negative battery cable.

(2) Remove the cover from the integrated power module (IPM) (Fig. 5).

NOTE: Refer to the fuse and relay map on the inner surface of the cover of the IPM for rear blower motor relay identification and location.

(3) Remove the rear blower motor relay from the IPM.

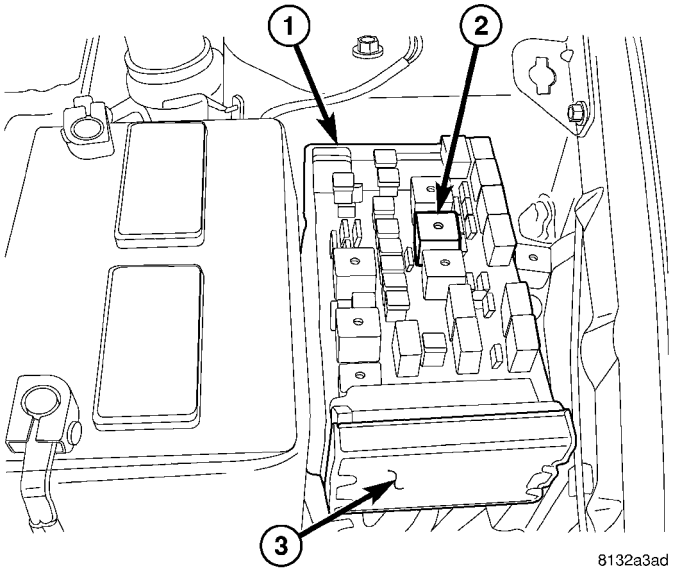

Fig. 5 Rear Blower Motor Relay

1 - INTEGRATED POWER MODULE (IPM)
2 - REAR BLOWER MOTOR RELAY
3 - FRONT CONTROL MODULE (FCM)

INSTALLATION

NOTE: Refer to the fuse and relay map on the inner surface of the cover of the integrated power module (IPM) for rear blower motor relay identification and location.

(1) Position the rear blower motor relay to the proper receptacle in the IPM.

(2) Align the rear blower motor relay terminals with the terminal cavities in the IPM receptacle.

(3) Push down firmly on the rear blower motor relay until the terminals are fully seated in the terminal cavities.

(4) Install the cover onto the IPM.

(5) Reconnect the negative battery cable.

BLOWER MOTOR RESISTOR BLOCK

DESCRIPTION

A rear blower motor resistor is used on this model when it is equipped with the manual heater-A/C system. Models equipped with the optional Automatic Temperature Control (ATC) system use a rear blower motor power module, instead of the blower motor resistor block (Refer to 24 - HEATING & AIR CONDITIONING/CONTROLS/POWER MODULE - DESCRIPTION). The rear blower motor resistor block is mounted to the rear HVAC housing, directly above the expansion valve. The resistor block consists of a molded plastic mounting plate with an integral connector receptacle. Concealed behind the mounting plate is an electrical circuit board with two resistors and a thermal fuse. The rear blower motor resistor block is accessed for service by removing the right quarter and D-pillar trim panels.

OPERATION

The rear blower motor resistor block is connected to the vehicle electrical system through a dedicated take out and connector of the rear HVAC wire harness. The blower motor resistor has an electrical circuit board with two resistors, each of which will reduce the current flow through the blower motor to change the blower motor speed. The blower motor switch in the manual heater-A/C system directs the ground path for the rear blower motor through the correct resistor to obtain the selected speed.

BLOWER MOTOR RESISTOR BLOCK (Continued)

With the blower motor switch in the lowest speed position, the ground path for the motor is applied through both resistors. Each higher speed selected with the blower motor switch applies the blower motor ground path through fewer of the resistors, increasing the blower motor speed. When the blower motor switch is in the highest speed position, the blower motor resistors are bypassed and the blower motor receives a direct path to ground through the blower motor switch.

The rear blower motor resistor block cannot be adjusted or repaired and, if faulty or damaged, it must be replaced.

DIAGNOSIS AND TESTING

REAR BLOWER MOTOR RESISTOR BLOCK

For circuit descriptions and diagrams, refer to the appropriate wiring information. The wiring information includes wiring diagrams, proper wire and connector repair procedures, further details on wire harness routing and retention, as well as pin-out and location views for the various wire harness connectors, splices and grounds.

(1) Disconnect and isolate the battery negative cable.

(2) Disconnect the rear HVAC wire harness connector from the rear blower motor resistor.

(3) Check for continuity between each of the blower motor switch input terminals of the blower motor resistor and the resistor output terminal. In each case there should be continuity. If OK, repair the wire harness circuits between the blower motor switch and the blower motor resistor, blower motor or blower motor relay as required. If not OK, replace the faulty blower motor resistor block.

REMOVAL

WARNING: THE REAR BLOWER MOTOR RESISTOR BLOCK MAY GET VERY HOT DURING NORMAL OPERATION. IF THE BLOWER MOTOR WAS TURNED ON PRIOR TO SERVICING THE BLOWER MOTOR RESISTOR BLOCK, WAIT FIVE MINUTES TO ALLOW THE BLOWER MOTOR RESISTORS TO COOL BEFORE PERFORMING DIAGNOSIS OR SERVICE. FAILURE TO TAKE THIS PRECAUTION CAN RESULT IN PERSONAL INJURY.

CAUTION: Do not operate the blower motor with the blower motor resistor block removed from the circuit. Failure to take this precaution can result in vehicle damage.

(1) Disconnect and isolate the battery negative cable.

(2) Remove the right quarter trim panel and right D-pillar trim panel from the quarter inner panel (Refer to 23 - BODY/INTERIOR/QUARTER TRIM PANEL - REMOVAL).

(3) Disconnect the rear HVAC wire harness connector from the blower motor resistor block (Fig. 6).

(4) Remove the two screws that secure the blower motor resistor block to the rear HVAC housing.

(5) Remove the rear blower motor resistor block from the rear HVAC housing.

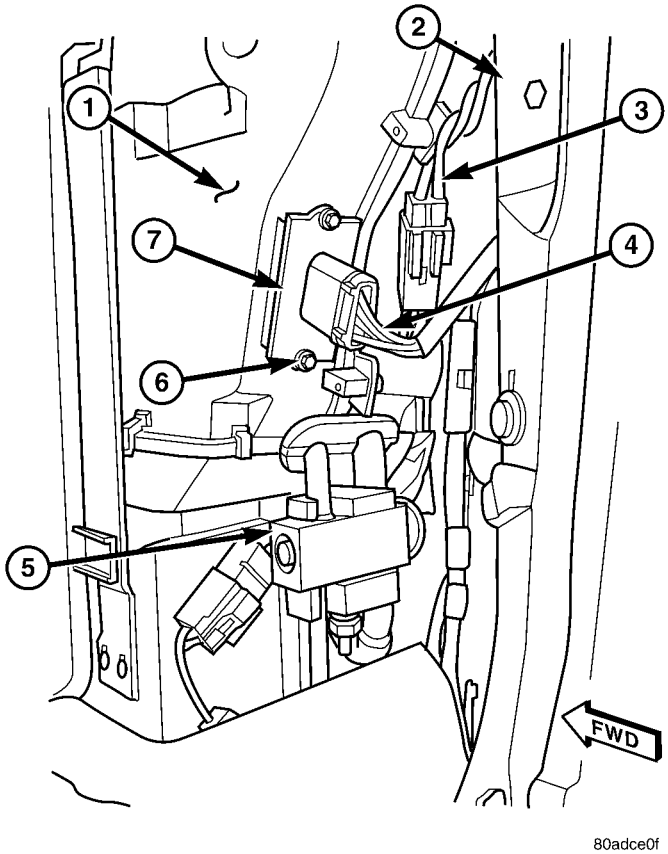

Fig. 6 Rear Blower Motor Resistor Block

1 - REAR HVAC HOUSING
2 - D-PILLAR
3 - BLOWER PIGTAIL WIRE
4 - CONNECTOR
5 - EXPANSION VALVE
6 - SCREW (2)
7 - BLOWER MOTOR RESISTOR BLOCK

INSTALLATION

(1) Position the rear blower motor resistor block into the rear HVAC housing.

(2) Install the two screws that secure the rear blower motor resistor block to the rear HVAC housing. Tighten the screws to 2 N·m (17 in. lbs.).

(3) Connect the rear HVAC wire harness connector to the rear blower motor resistor block.

(4) Reinstall the right quarter trim panel and right D-pillar trim panel onto the quarter inner panel (Refer to 23 - BODY/INTERIOR/QUARTER TRIM PANEL - INSTALLATION).

(5) Reconnect the battery negative cable.

MODE DOOR ACTUATOR - REAR

DESCRIPTION

The rear mode door actuator is a reversible, 12-volt Direct Current (DC), servo motor. The mode door actuator is located on the outboard side of the rear HVAC housing, above the blend door actuator. The mode door actuator is mechanically connected to the mode door.

The rear mode door actuator is interchangeable with the actuator for the blend door. Each actuator is contained within an identical black molded plastic housing with an integral wire connector receptacle. Two integral mounting tabs allow the actuator to be secured with two screws to the rear HVAC housing. Each actuator also has an identical output shaft with splines that connects it to the pivot or linkage of the proper door. The rear mode door actuator does not require mechanical indexing to the mode door pivot, as it is electronically calibrated by the front heater-A/C control module.

OPERATION

The rear mode door actuator is connected to the front heater-A/C control module through the vehicle electrical system by a dedicated two-wire take out and connector of the rear HVAC wire harness. The rear mode door actuator can move the mode door in two directions. When the front heater-A/C control module pulls the voltage on one side of the motor connection high and the other connection low, the rear mode door will move in one direction. When the module reverses the polarity of the voltage to the motor, the rear mode door moves in the opposite direction. When the module makes the voltage to both connections high or both connections low, the mode door stops and will not move. These same motor connections also provide a feedback signal to the front heater-A/C control module. This feedback signal allows the module to monitor the operation and relative positions of the rear mode door actuator and the mode door. The front heater-A/C control module learns the rear mode door stop positions during the calibration procedure and will store a Diagnostic Trouble Code (DTC) for any problems it detects in the mode door actuator circuits.

The rear mode door actuator can be diagnosed using a DRBIII® scan tool. Refer to Body Diagnostic Procedures for more information. The rear mode door actuator cannot be adjusted or repaired and, if damaged or faulty, it must be replaced.

REMOVAL

(1) Disconnect and isolate the battery negative cable.

(2) Remove the right quarter trim panel and right D-pillar trim panel from the quarter inner panel (Refer to 23 - BODY/INTERIOR/QUARTER TRIM PANEL - REMOVAL).

(3) Remove the two screws that secure the top of the quarter trim panel attaching bracket to the quarter inner panel.

(4) Remove the screw that secures the back of the rear HVAC housing to the right D-pillar.

(5) Remove the screw that secures the front of the rear HVAC housing to the right quarter inner panel.

(6) Carefully pull the top of the rear HVAC housing away from the right quarter inner panel far enough to reach between the rear HVAC housing and the quarter inner panel to access the rear mode door actuator (Fig. 7).

(7) Remove the two screws that secure the mode door actuator to the rear HVAC housing.

(8) Pull the mode door actuator away from the rear HVAC housing far enough to disengage the actuator output shaft from the mode door linkage.

(9) Raise the mode door actuator far enough to access and disconnect the rear HVAC wire harness connector from the actuator

MODE DOOR ACTUATOR - REAR (Continued)

(10) Remove the rear mode door actuator from between the rear HVAC housing and the quarter inner panel.

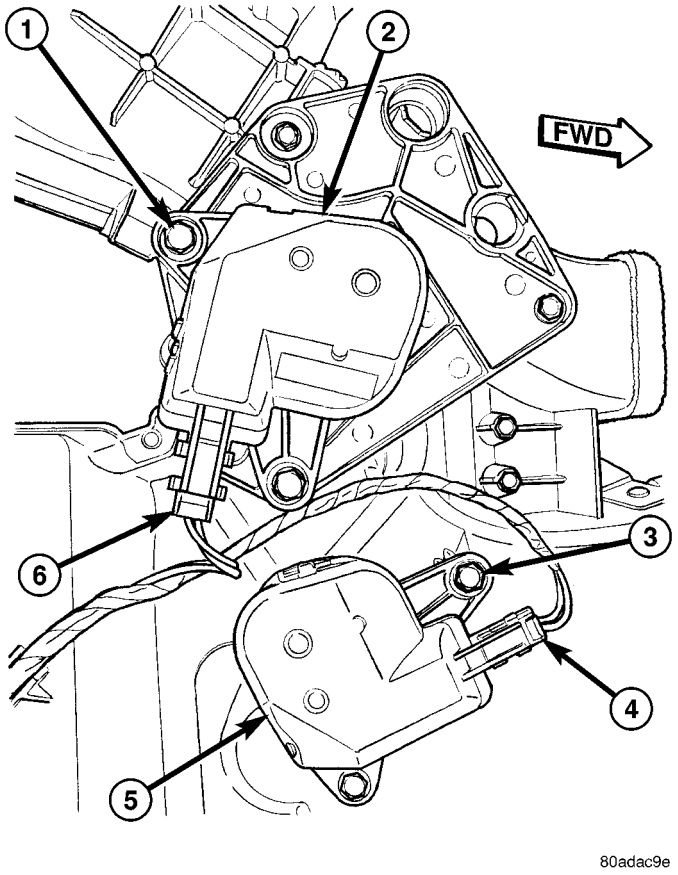

Fig. 7 Rear HVAC Blend Door Actuator

1 - SCREW (2)
2 - MODE DOOR ACTUATOR
3 - SCREW (2)
4 - CONNECTOR
5 - BLEND DOOR ACTUATOR
6 - WIRE HARNESS CONNECTOR

INSTALLATION

(1) Position the mode door actuator between the rear HVAC housing and the quarter inner panel.

(2) Reconnect the rear HVAC wire harness connector to the rear mode door actuator.

(3) Position the rear mode door actuator onto the rear HVAC housing. If necessary, rotate the actuator slightly to align the splines on the actuator output shaft with those in the mode door linkage.

(4) Install the two screws that secure the rear mode door actuator to the rear HVAC housing. Tighten the screws to 2 N·m (17 in. lbs.).

(5) Push the top of the rear HVAC housing back into position against the right quarter inner panel.

(6) Install the screw that secures the front of the rear HVAC housing to the right quarter inner panel. Tighten the screw to 11 N·m (97 in. lbs.).

(7) Install the screw that secures the back of the rear HVAC housing to the right D-pillar. Tighten the screw to 11 N·m (97 in. lbs.).

(8) Install the two screws that secure the top of the quarter trim panel attaching bracket to the quarter inner panel. Tighten the screws to 2 N·m (17 in. lbs.).

(9) Reinstall the right quarter trim panel and right D-pillar trim panel onto the quarter inner panel (Refer to 23 - BODY/INTERIOR/QUARTER TRIM PANEL - INSTALLATION).

(10) Reconnect the battery negative cable.

(11) Perform the heater-A/C control calibration procedure (Refer to 24 - HEATING & AIR CONDITIONING/CONTROLS - FRONT/A/C-HEATER CONTROL - STANDARD PROCEDURE - HEATER-A/C CONTROL CALIBRATION).

POWER MODULE - REAR BLOWER MOTOR

DESCRIPTION

A rear blower motor power module is used on this model when it is equipped with the optional Automatic Temperature Control (ATC) system. Models equipped with the standard manual heater-A/C system use a blower motor resistor block , instead of the blower motor power module (Refer to 24 - HEATING & AIR CONDITIONING/CONTROLS/BLOWER MOTOR RESISTOR BLOCK - DESCRIPTION).

The rear blower motor power module is installed in the back of the rear HVAC housing, directly above the expansion valve. The module consists of a molded plastic mounting plate with two integral connector receptacles. Concealed behind the mounting plate within the evaporator housing is the power module electronic circuitry and a large finned, heat sink. The power module is accessed for service by removing the right quarter and D-pillar trim panels.

OPERATION

The rear blower motor power module is connected to the vehicle electrical system through a dedicated take out and connector of the rear HVAC wire harness. A second connector receptacle receives the pigtail wire connector from the rear blower motor. The rear blower motor power module allows the microprocessor-based Automatic Temperature Control (ATC) heater-A/C control module to calculate and provide infinitely variable blower motor speeds based upon either manual blower switch input or the ATC programming using a Pulse Width Modulated (PWM) circuit strategy. The PWM voltage is applied to a comparator circuit which compares the PWM signal voltage to the blower motor feedback voltage. The

resulting output drives the power module circuitry, which adjusts the voltage output received from the rear blower motor relay to change or maintain the desired blower speed. The rear blower motor power module is diagnosed using a DRBIII® scan tool. Refer to Body Diagnostic Procedures.

REMOVAL

(1) Disconnect and isolate the battery negative cable.

(2) Remove the right quarter trim panel and right D-pillar trim panel from the quarter inner panel (Refer to 23 - BODY/INTERIOR/QUARTER TRIM PANEL - REMOVAL).

(3) Disconnect the rear HVAC wire harness connector from the rear blower motor power module (Fig. 8).

(4) Disconnect the rear blower motor pigtail wire connector from the rear blower motor power module.

(5) Remove the two screws that secure the rear blower motor power module to the rear HVAC housing.

(6) Remove the rear blower motor power module from the rear HVAC housing.

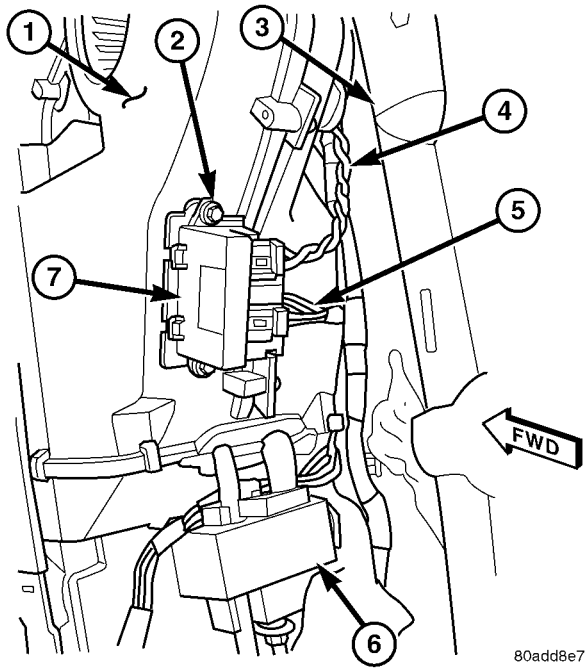

Fig. 8 Rear Blower Motor Power Module

1 - REAR HVAC HOUSING
2 - SCREW (2)
3 - D-PILLAR
4 - REAR BLOWER MOTOR PIGTAIL WIRE
5 - REAR HVAC WIRE HARNESS
6 - EXPANSION VALVE
7 - REAR BLOWER MOTOR POWER MODULE

INSTALLATION

(1) Position the rear blower motor power module into the rear HVAC housing.

(2) Install the two screws that secure the rear blower motor power module to the rear HVAC housing. Tighten the screws to 2 N·m (17 in. lbs.).

(3) Connect the rear blower motor pigtail wire to the rear blower motor power module.

(4) Connect the rear HVAC wire harness connector to the rear blower motor power module.

(5) Reinstall the right quarter trim panel and right D-pillar trim panel onto the quarter inner panel (Refer to 23 - BODY/INTERIOR/QUARTER TRIM PANEL - INSTALLATION).

(6) Reconnect the battery negative cable.

DISTRIBUTION - FRONT

TABLE OF CONTENTS

page

AIR FILTER
DESCRIPTION 42
REMOVAL 42
INSTALLATION 43
AIR OUTLETS
DESCRIPTION 43
REMOVAL
FRONT CENTER BEZEL OUTLETS 44
FRONT DEMISTER OUTLETS 44
INSTRUMENT PANEL OUTLETS 45
INSTALLATION
FRONT CENTER BEZEL OUTLETS 45
FRONT DEMISTER OUTLETS 45
INSTRUMENT PANEL OUTLETS 45
BLOWER MOTOR
DESCRIPTION 45
OPERATION 45
DIAGNOSIS AND TESTING
FRONT BLOWER MOTOR 46
REMOVAL 48
INSTALLATION 49
DEFROSTER DUCT
REMOVAL 49
INSTALLATION 50
FLOOR DISTRIBUTION DUCTS
REMOVAL 50
INSTALLATION 50
HVAC HOUSING
REMOVAL
REMOVAL 50
DISSASEMBLY 51
INSTALLATION
ASSEMBLY 53
INSTALLATION 53
INSTRUMENT PANEL DEMISTER DUCTS
REMOVAL 54
INSTALLATION 54
INSTRUMENT PANEL DUCTS
REMOVAL 55
INSTALLATION 55

AIR FILTER

DESCRIPTION

A dust and odor air filter is standard equipment on models equipped with the three zone temperature control systems (Fig. 1). The filter element is the same size as the front air conditioner evaporator to ensure ample filtering capacity. A removable door on the bottom of the front HVAC housing below the glove box provides easy access to the filter element for replacement. The filter should be checked and replaced at least once every 24,000 km (15,000 miles) and checked if heater-A/C system performance seems lower than expected.

REMOVAL

(1) Locate the air filter door on the bottom of the lower HVAC housing just outboard of the passenger side of the instrument panel center stack (Fig. 2).

(2) Slide the air filter door latch toward the rear of the vehicle until it engages the opened stop on the door.

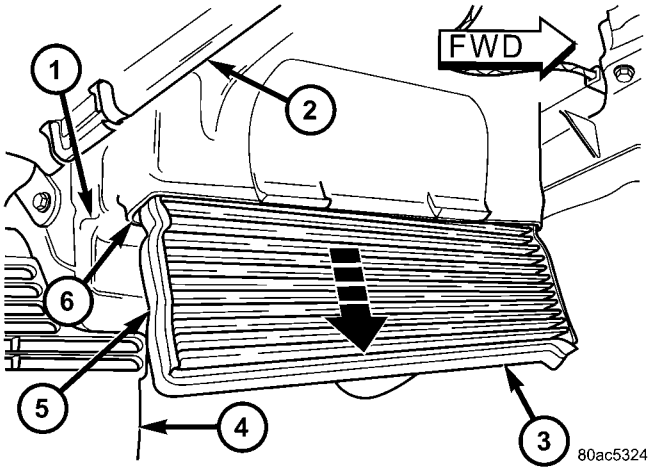

Fig. 1 Air Filter - LHD Shown, RHD Typical

1 - LOWER HVAC HOUSING
2 - LOWER EDGE OF INSTRUMENT PANEL
3 - AIR FILTER (IF EQUIPPED)
4 - CENTER FLOOR BRACKET COVER
5 - FILTER SEALING EDGES (IF EQUIPPED)
6 - AIR FILTER OPENING (IF EQUIPPED)

AIR FILTER (Continued)

(3) Pull the air filter door straight downward to disengage it from the air filter opening of the lower HVAC housing.

(4) Use your fingers to reach through the air filter opening of the lower HVAC housing far enough to grasp the air filter.

(5) Pull the air filter straight down and out of the HVAC housing.

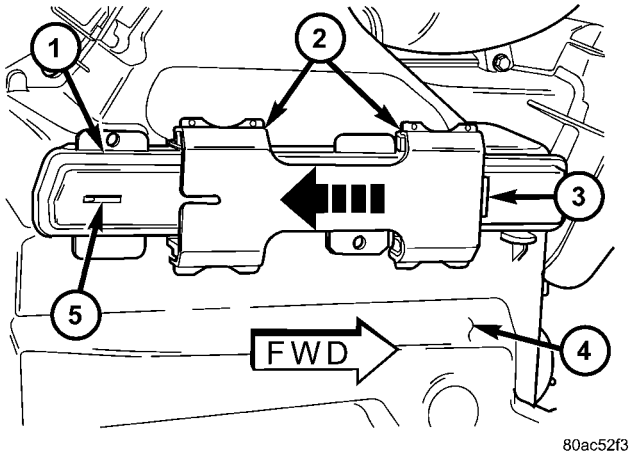

Fig. 2 Air Filter Door - Typical

1 - AIR FILTER DOOR
2 - LATCH
3 - CLOSED STOP
4 - LOWER HVAC HOUSING
5 - OPENED STOP

INSTALLATION

(1) Note the “Airflow” directional arrow imprinted on the foam seal around the frame of the air filter. This arrow should always be oriented towards the center of the vehicle.

(2) With the air filter “Airflow” arrow properly oriented, carefully slide the filter fully upward into the HVAC housing through the air filter opening.

(3) With the latch still positioned against its opened stop, reinstall the air filter door onto the lower HVAC housing air filter opening.

(4) Slide the air filter door latch toward the front of the vehicle until it hits the closed stop on the door.

AIR OUTLETS

DESCRIPTION

Based upon the system mode selected, conditioned air can exit the front HVAC housing through one or a combination of the four main housing outlets: defrost, demist, panel, or floor. Once the conditioned air exits the unit housing, it is directed through molded plastic ducts to the various outlets in the vehicle interior. These outlets and their locations are as follows:

- **Defroster Outlet** - A single, centrally mounted outlet delivers air for defrosting the large windshield. Because outlet vanes are not needed to direct flow, a simple, integral grid is molded into the center of the instrument panel top cover to prevent objects from falling into the duct. If the defroster outlet is faulty or damaged, the instrument panel top cover must be replaced.
- **Demister Outlets** - There are two side window demisters that aid in defogging and defrosting the front door windows. One demister outlet is located at each outboard end of the instrument panel top pad, near the belt line at the A-pillars. The demister outlets can be removed from the top pad individually for service replacement.
- **Instrument Panel Outlets** - There are five panel outlets in the instrument panel, one located near each outboard end of the instrument panel facing the rear of the vehicle, and three located near the top of the instrument panel center bezel. On models with manual temperature control, all five of these outlets are fully adjustable. On models with Automatic Temperature Control (ATC) system, the center outlet in the center bezel has fixed vanes because it also houses the remote infrared temperature sensors for the front seat positions. The outboard outlets can be removed individually for service replacement. The center bezel outlets are serviced as a gang of three outlets and, on models with ATC, also includes the infrared sensors.
- **Front Door Rear Outlets** - A fully adjustable outlet located at the rear of each front door trim panel supplies only cooled air to the intermediate seat passengers. Air is supplied to these outlets from the instrument panel through ducts in the doors that use molded seals at the instrument panel to prevent air leakage. The door ducts are integral to the front door trim panels. These outlets also incorporate a red reflector to improve the safety and visibility of an opened front door to traffic approaching the vehicle from the rear at night. These outlets can be removed from the door trim panels for service replacement.
- **Front Floor Outlets** - There are two front floor outlets, one located above each side of the floor panel center tunnel below the instrument panel. These outlets are integral to the front HVAC distribution housing.
- **Rear Floor Outlets** - Wide rear floor outlets located under each front seat have integral, fixed directional dividers to distribute heated air across the floor for intermediate seat passengers. These outlets are integral to the floor distribution ducts routed under the front floor carpet from an outlet nozzle on the bottom of the front HVAC distribution housing.

AIR OUTLETS (Continued)

REMOVAL

FRONT CENTER BEZEL OUTLETS

The three outlets located near the top of the instrument panel center bezel are serviced only as a set of all three outlets. If the vehicle is equipped with the optional automatic temperature control (ATC) system, the center outlet of the three has fixed vanes and also houses the remote front infrared temperature sensors.

WARNING: ON VEHICLES EQUIPPED WITH AIRBAGS, DISABLE THE AIRBAG SYSTEM BEFORE ATTEMPTING ANY STEERING WHEEL, STEERING COLUMN, OR INSTRUMENT PANEL COMPONENT DIAGNOSIS OR SERVICE. DISCONNECT AND ISOLATE THE BATTERY NEGATIVE (GROUND) CABLE, THEN WAIT TWO MINUTES FOR THE AIRBAG SYSTEM CAPACITOR TO DISCHARGE BEFORE PERFORMING FURTHER DIAGNOSIS OR SERVICE. THIS IS THE ONLY SURE WAY TO DISABLE THE AIRBAG SYSTEM. FAILURE TO TAKE THE PROPER PRECAUTIONS COULD RESULT IN ACCIDENTAL AIRBAG DEPLOYMENT AND POSSIBLE PERSONAL INJURY.

(1) Disconnect and isolate the negative battery cable.

(2) Remove the center bezel from the instrument panel (Refer to 23 - BODY/INSTRUMENT PANEL/ INSTRUMENT PANEL CENTER BEZEL - REMOVAL).

(3) Place the center bezel face down on a suitable work surface. Be certain to take the proper precautions to protect the face of the center bezel from cosmetic damage.

(4) If the vehicle is equipped with the optional ATC system, disconnect the ATC remote infrared temperature sensor jumper harness from the sensor connector receptacle located on the bottom of the center outlet housing (Fig. 3).

(5) Remove the three screws that secure the bottom of the outlet housing to the center bezel.

(6) Roll the bottom of the outlet housing upwards towards the top of the center bezel far enough to disengage the retainer features on the top of the outlet housing from their receptacles at the top of the center bezel.

(7) Remove the center bezel outlets and housing from the center bezel as a unit.

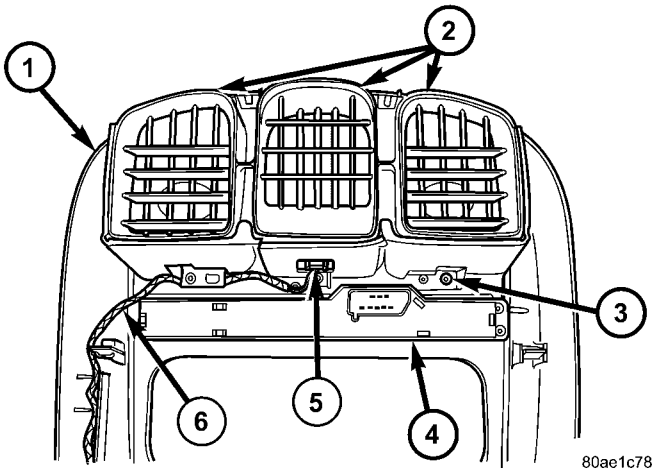

Fig. 3 Center Air Outlets

1 - CENTER BEZEL
2 - CENTER BEZEL OUTLETS
3 - SCREW (3)
4 - INSTRUMENT PANEL SWITCH BANK
5 - CONNECTOR (ATC ONLY)
6 - JUMPER HARHESS (ATC ONLY)

FRONT DEMISTER OUTLETS

(1) Using a trim stick or another suitable wide flat-bladed tool, gently pry the outer perimeter of the demister outlet away from the instrument panel top pad until the snap features on the outlet are released (Fig. 4).

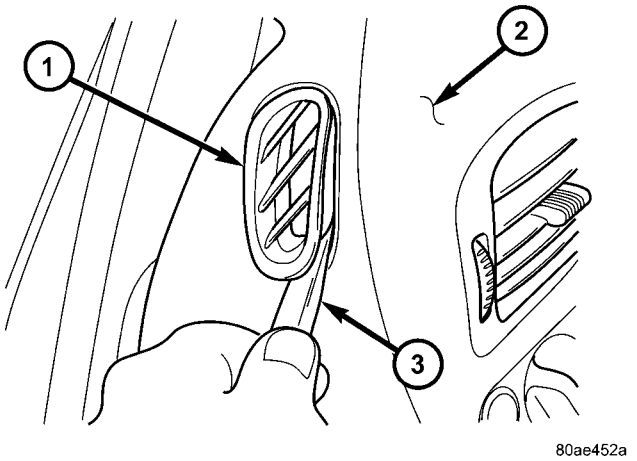

Fig. 4 Demister Outlet

1 - DEMISTER OUTLET
2 - INSTRUMENT PANEL TOP PAD
3 - TRIM STICK

(2) Remove the demister outlet from the demister duct opening in the instrument panel top pad.

AIR OUTLETS (Continued)

INSTRUMENT PANEL OUTLETS

(1) Using a trim stick or another suitable wide flat-bladed tool, gently pry the outer perimeter of the instrument panel outlet away from the instrument panel top pad until the snap features on the outlet are released (Fig. 5).

(2) Remove the instrument panel outlet from the panel duct opening in the instrument panel top pad.

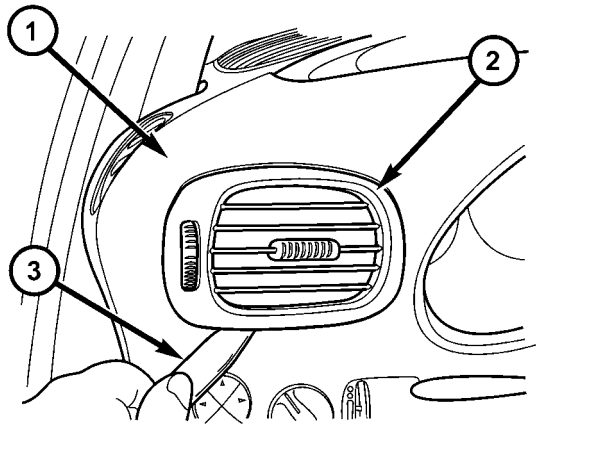

Fig. 5 Instrument Panel Outlet - Left Side Shown

1 - INSTRUMENT PANEL TOP PAD
2 - INSTRUMENT PANEL OUTLET
3 - TRIM STICK

INSTALLATION

FRONT CENTER BEZEL OUTLETS

(1) Position the center bezel outlets and housing onto the center bezel as a unit.

(2) Engage the retainer features on the top of the outlet housing with their receptacles at the top of the center bezel, then roll the bottom of the outlet housing downwards towards the center bezel.

(3) Install the three screws that secure the bottom of the outlet housing to the center bezel. Tighten the screws to 2 N·m (17 in. lbs.).

(4) If the vehicle is equipped with the optional ATC system, reconnect the ATC remote infrared temperature sensor jumper harness to the sensor connector receptacle located on the bottom of the center outlet housing.

(5) Reinstall the center bezel onto the instrument panel (Refer to 23 - BODY/INSTRUMENT PANEL/ INSTRUMENT PANEL CENTER BEZEL - INSTALLATION).

(6) Reconnect the battery negative cable.

FRONT DEMISTER OUTLETS

(1) Position the demister outlet over the demister duct opening in the instrument panel top pad.

(2) Using hand pressure, press the demister outlet firmly and evenly into the instrument panel top pad opening until the snap features on the outlet are fully engaged.

INSTRUMENT PANEL OUTLETS

(1) Position the instrument panel outlet into the panel duct opening in the instrument panel top pad.

(2) Using hand pressure, press the instrument panel outlet firmly and evenly into the instrument panel top pad opening until the snap features on the outlet are fully engaged.

BLOWER MOTOR

DESCRIPTION

The blower motor is a 12-volt, Direct Current (DC) motor with a squirrel cage-type blower wheel that is secured to the blower motor shaft (Fig. 6). The blower motor and wheel are located near the passenger side end of the HVAC housing in the passenger compartment below the instrument panel. The blower motor and blower motor wheel are factory balanced and cannot be adjusted or repaired. If faulty or damaged, the blower motor and blower wheel must be replaced as an assembly.

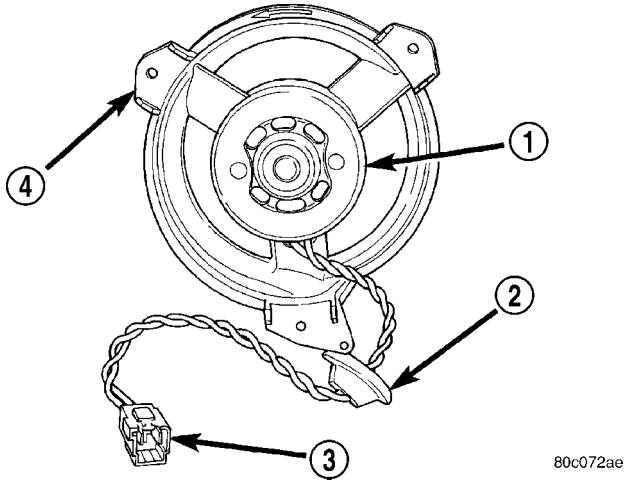

Fig. 6 Blower Motor

1 - BLOWER MOTOR
2 - RUBBER GROMMET
3 - BLOWER MOTOR CONNECTOR
4 - MOUNTING TABS

OPERATION

On models equipped with the manual heater-A/C system, the blower motor will operate whenever the ignition switch is in the On position and the blower control switch is in any position except Off. On models equipped with the Automatic Temperature Control (ATC) system, the blower motor will operate

whenever the ignition switch is in the On position and the A/C-heater control power is turned on.

The blower motor receives battery current whenever the front blower motor relay is energized. The front blower motor relay output circuit is protected by a fuse in the Integrated Power Module (IPM) located in the engine compartment near the battery. In the manual heater-A/C system, the blower motor speed is controlled by regulating the path to ground through the blower control switch and the blower motor resistor. In the ATC system, the blower motor speed is controlled by an electronic blower motor power module, which uses a pulse width modulated input from the ATC module and feedback from the blower motor to regulate the blower motor ground path it provides. The blower motor and wheel are used to control the velocity of air moving through the HVAC housing by spinning the blower wheel within the housing at the selected speed or, in the ATC system, at the selected or programmed speed.

DIAGNOSIS AND TESTING

FRONT BLOWER MOTOR

BLOWER MOTOR INOPERATIVE

WARNING: ON VEHICLES EQUIPPED WITH AIRBAGS, DISABLE THE AIRBAG SYSTEM BEFORE ATTEMPTING ANY STEERING WHEEL, STEERING COLUMN, OR INSTRUMENT PANEL COMPONENT DIAGNOSIS OR SERVICE. DISCONNECT AND ISOLATE THE BATTERY NEGATIVE (GROUND) CABLE, THEN WAIT TWO MINUTES FOR THE AIRBAG SYSTEM CAPACITOR TO DISCHARGE BEFORE PERFORMING FURTHER DIAGNOSIS OR SERVICE. THIS IS THE ONLY SURE WAY TO DISABLE THE AIRBAG SYSTEM. FAILURE TO TAKE THE PROPER PRECAUTIONS COULD RESULT IN ACCIDENTAL AIRBAG DEPLOYMENT AND POSSIBLE PERSONAL INJURY.

For circuit descriptions and diagrams, refer to the appropriate wiring information. The wiring information includes wiring, diagrams, proper wire and connector repair procedures, further details on wire harness routing and retention, as well as pin-out and location views for the various wire harness connectors, splices and grounds.

BLOWER MOTOR ELECTRICAL DIAGNOSIS

(1) Check the fuse (Fuse 10 - 40 ampere) in the Integrated Power Module (IPM). If OK, go to Step 2. If not OK, repair the shorted circuit or component as required and replace the faulty fuse.

(2) Turn the ignition switch to the On position. Be certain that the A/C-heater control power is turned on. Check for battery voltage at the fuse (Fuse 10 - 40 ampere) in the IPM. If OK, go to Step 3. If not OK, check the front blower motor relay.

(3) Turn the ignition switch to the Off position. Disconnect and isolate the battery negative cable. Disconnect the front HVAC wire harness connector for the front blower motor resistor block (Manual Temperature Control) or the front blower motor power module (Automatic Temperature Control) from the resistor or module connector receptacle. Reconnect the battery negative cable. Turn the ignition switch to the On position. Be certain that the A/C-heater control power is turned on. Check for battery voltage at the fused front blower motor relay output circuit cavity of the front HVAC wire harness connector for the front blower motor resistor block (MTC) or the front blower motor power module (ATC). If OK, go to Step 4. If not OK, repair the open fused front blower motor relay output circuit to the IPM as required.

(4) Turn the ignition switch to the Off position. Disconnect and isolate the battery negative cable. Disconnect the front blower motor pigtail wire connector from the connector receptacle of the front blower motor resistor block (MTC) or the front blower motor power module (ATC). Use jumper wires to connect a battery and ground feeds to the blower motor pigtail wire connector. The blower motor should operate. If OK with MTC, proceed to diagnosis of the front blower motor resistor block (Refer to 24 - HEATING & AIR CONDITIONING/CONTROLS - FRONT/BLOWER MOTOR RESISTOR - DIAGNOSIS AND TESTING). If OK with ATC, use a DRBIII scan tool to diagnose the front blower motor power module. Refer to Body Diagnostic information. If not OK with MTC or ATC, replace the faulty front blower motor.

BLOWER MOTOR NOISE OR VIBRATION

Refer to the Blower Motor Noise/Vibration Diagnosis chart for basic checks of the blower motor when a vibration or noise is present (Fig. 7).

BLOWER MOTOR (Continued)

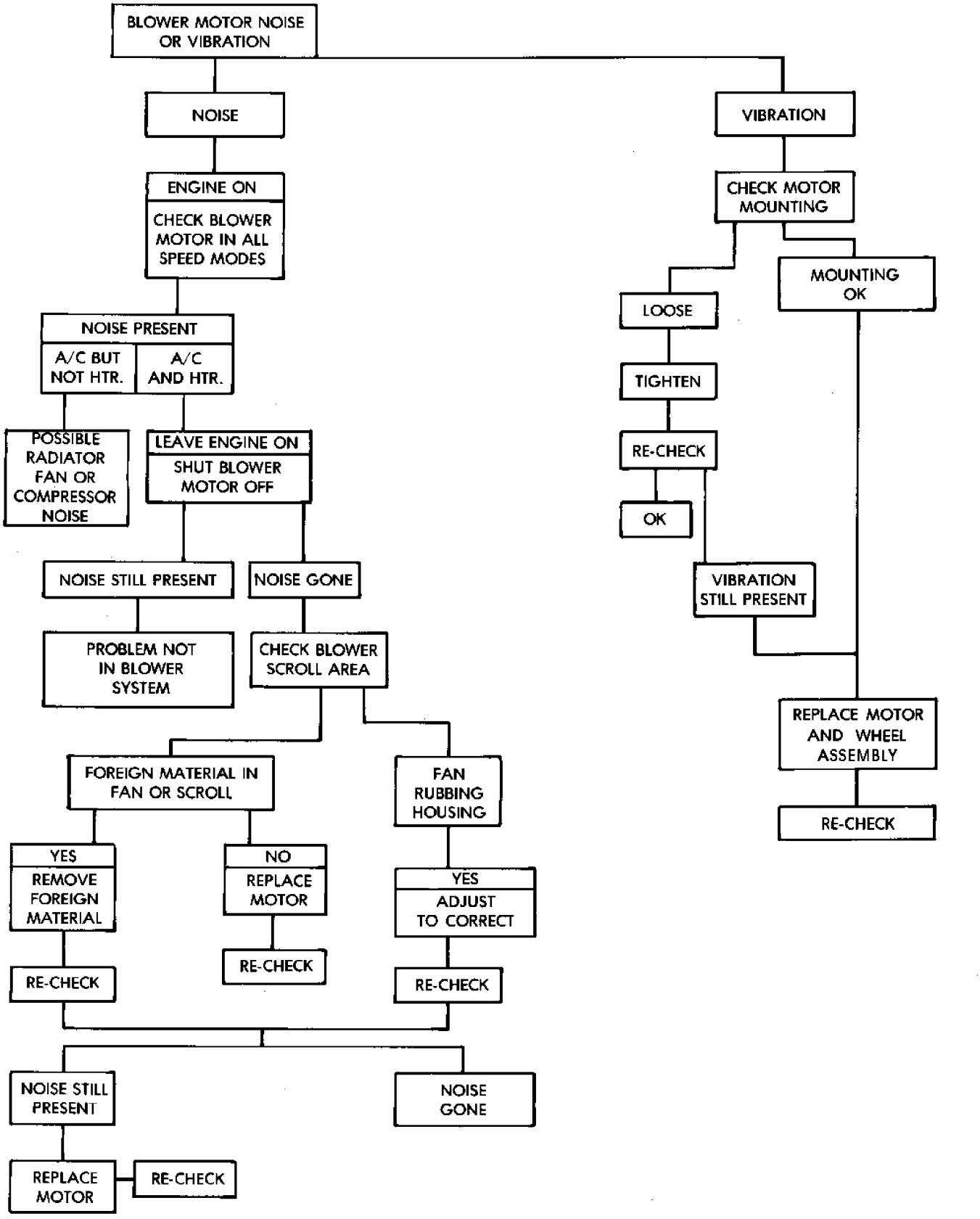

Fig. 7 Blower Motor Noise/Vibration Diagnosis

BLOWER MOTOR (Continued)

REMOVAL

WARNING: ON VEHICLES EQUIPPED WITH AIRBAGS, DISABLE THE AIRBAG SYSTEM BEFORE ATTEMPTING ANY STEERING WHEEL, STEERING COLUMN, OR INSTRUMENT PANEL COMPONENT DIAGNOSIS OR SERVICE. DISCONNECT AND ISOLATE THE BATTERY NEGATIVE (GROUND) CABLE, THEN WAIT TWO MINUTES FOR THE AIRBAG SYSTEM CAPACITOR TO DISCHARGE BEFORE PERFORMING FURTHER DIAGNOSIS OR SERVICE. THIS IS THE ONLY SURE WAY TO DISABLE THE AIRBAG SYSTEM. FAILURE TO TAKE THE PROPER PRECAUTIONS COULD RESULT IN AN ACCIDENTAL AIRBAG DEPLOYMENT AND POSSIBLE PERSONAL INJURY OR DEATH.

NOTE: The blower motor is located on the passenger side of the vehicle under the instrument panel. The blower motor can be removed from the vehicle without having to remove the HVAC housing.

(1) Disconnect and isolate the negative battery cable.

(2) Remove the passenger side cowl trim panel (Refer to 23 - BODY/INTERIOR/COWL TRIM - REMOVAL).

(3) Pull back the carpet to access the front upper screw that secures the air inlet housing.

(4) Remove the recirculation door actuator (Refer to 24 - HEATING & AIR CONDITIONING/CONTROLS - FRONT/RECIRCULATION DOOR ACTUATOR - REMOVAL).

(5) Remove the recirculation door actuator wire lead from the routing clip located on the lower air inlet housing and position the wire lead aside.

(6) Disconnect the blower motor wire lead connector from the blower motor resistor block or power module, depending on application.

(7) Remove the one screw (from the top) that secures the lower air inlet housing to the upper air inlet housing (Fig. 8).

(8) Remove the four screws (from the bottom) that secure the lower air inlet housing to the upper air inlet housing and the lower HVAC housing.

(9) Push the rubber blower motor wire lead grommet through the opening in the lower air inlet housing (Fig. 9).

(10) Feed the blower motor wire lead through the opening in the lower air inlet housing and remove the lower air inlet housing from the vehicle.

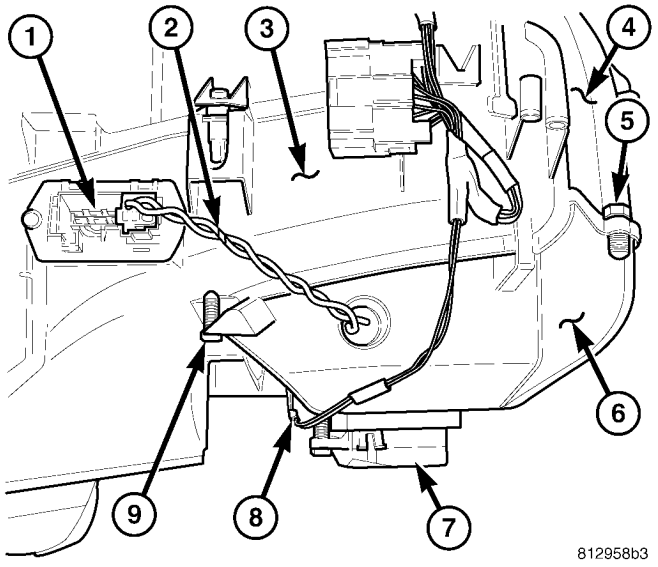

Fig. 8 Lower Air Inlet Housing

1 - BLOWER MOTOR RESISTOR BLOCK/POWER MODULE
2 - BLOWER MOTOR WIRE LEAD
3 - LOWER HVAC HOUSING
4 - UPPER AIR INLET HOUSING
5 - UPPER SCREW (1)
6 - LOWER AIR INLET HOUSING
7 - RECIRCULATION DOOR ACTUATOR
8 - ACTUATOR WIRE LEAD
9 - LOWER SCREW (4)

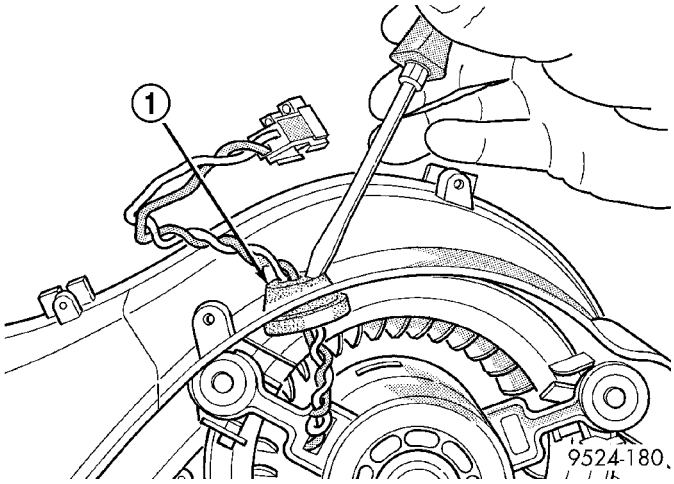

Fig. 9 Blower Motor Wire Lead Grommet

1 - BLOWER MOTOR WIRE LEAD GROMMET

(11) Position the recirculation-air door as necessary to access and remove the three screws that secure the blower motor to the lower half of the HVAC housing.

BLOWER MOTOR (Continued)

(12) Gently flex the recirculation air door far down enough to remove the blower motor and wheel from the HVAC housing.

(13) Remove the blower motor and wheel from the HVAC housing. Note the position of the blower motor mounting tabs (Fig. 10).

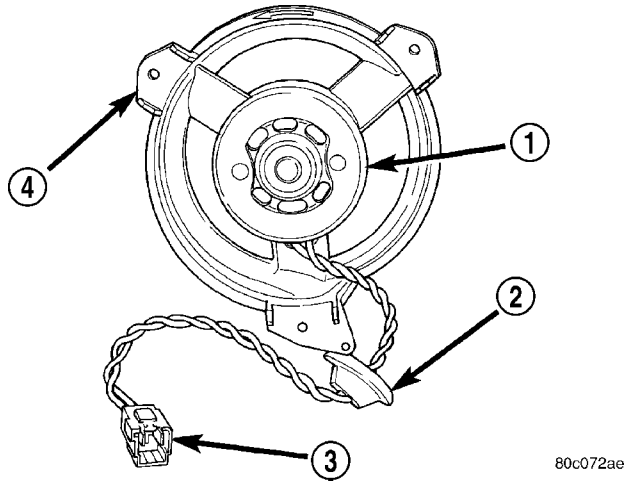

Fig. 10 Blower Motor Mounting Tabs

1 - BLOWER MOTOR
2 - RUBBER GROMMET
3 - BLOWER MOTOR CONNECTOR
4 - MOUNTING TABS

INSTALLATION

(1) Position the blower motor and wheel to the lower half of the HVAC housing. Align the blower motor mounting tabs to the correct location on the HVAC housing.

(2) Gently flex the recirculation-air door far down enough to install the blower motor and wheel into the HVAC housing.

(3) Position the recirculation-air door as necessary to install the three screws that secure the blower motor to the HVAC housing. Tighten the screws to 2 N·m (17 in. lbs.).

(4) Feed the blower motor wire lead through the opening in the lower air inlet housing and seat the rubber grommet into the lower air inlet housing.

(5) Position the recirculation-air door pivot into the lower air inlet housing.

(6) Install the four screws (from the bottom) that secure the lower air inlet housing to the upper air inlet housing and the lower HVAC housing. Tighten the screws to 2 N·m (17 in. lbs.).

(7) Install the one screw (from the top) that secures the lower air inlet housing to the upper air inlet housing. Tighten the screws to 2 N·m (17 in. lbs.).

(8) Connect the blower motor wire lead connector to the blower motor resistor block or power module, depending on application.

(9) Install the recirculation door actuator (Refer to 24 - HEATING & AIR CONDITIONING/CONTROLS - FRONT/RECIRCULATION DOOR ACTUATOR - INSTALLATION).

(10) Install the recirculation door actuator wire lead into the routing clip located on the lower air inlet housing.

(11) Reinstall the carpet.

(12) Install the passenger side cowl trim panel (Refer to 23 - BODY/INTERIOR/COWL TRIM - INSTALLATION).

(13) Reconnect the negative battery cable.

(14) Perform the heater-A/C control calibration procedure (Refer to 24 - HEATING & AIR CONDITIONING/CONTROLS - FRONT/A/C-HEATER CONTROL - STANDARD PROCEDURE - HEATER-A/C CONTROL CALIBRATION).

DEFROSTER DUCT

REMOVAL

WARNING: ON VEHICLES EQUIPPED WITH AIRBAGS, DISABLE THE AIRBAG SYSTEM BEFORE ATTEMPTING ANY STEERING WHEEL, STEERING COLUMN, OR INSTRUMENT PANEL COMPONENT DIAGNOSIS OR SERVICE. DISCONNECT AND ISOLATE THE BATTERY NEGATIVE (GROUND) CABLE, THEN WAIT TWO MINUTES FOR THE AIRBAG SYSTEM CAPACITOR TO DISCHARGE BEFORE PERFORMING FURTHER DIAGNOSIS OR SERVICE. THIS IS THE ONLY SURE WAY TO DISABLE THE AIRBAG SYSTEM. FAILURE TO TAKE THE PROPER PRECAUTIONS COULD RESULT IN ACCIDENTAL AIRBAG DEPLOYMENT AND POSSIBLE PERSONAL INJURY.

(1) Disconnect and isolate the battery negative cable.

(2) Remove the instrument panel from the vehicle. (Refer to 23 - BODY/INSTRUMENT PANEL/INSTRUMENT PANEL ASSEMBLY - REMOVAL).

(3) Place the instrument panel face down on a suitable work surface. Be certain to take the proper precautions to protect the face of the instrument panel from cosmetic damage.

(4) Remove the fasteners that secure the defroster duct to the instrument panel armature.

(5) Remove the defroster duct from the instrument panel.

DEFROSTER DUCT (Continued)

INSTALLATION

WARNING: ON VEHICLES EQUIPPED WITH AIRBAGS, DISABLE THE AIRBAG SYSTEM BEFORE ATTEMPTING ANY STEERING WHEEL, STEERING COLUMN, OR INSTRUMENT PANEL COMPONENT DIAGNOSIS OR SERVICE. DISCONNECT AND ISOLATE THE BATTERY NEGATIVE (GROUND) CABLE, THEN WAIT TWO MINUTES FOR THE AIRBAG SYSTEM CAPACITOR TO DISCHARGE BEFORE PERFORMING FURTHER DIAGNOSIS OR SERVICE. THIS IS THE ONLY SURE WAY TO DISABLE THE AIRBAG SYSTEM. FAILURE TO TAKE THE PROPER PRECAUTIONS COULD RESULT IN ACCIDENTAL AIRBAG DEPLOYMENT AND POSSIBLE PERSONAL INJURY.

(1) Position the defroster duct to the instrument panel.

(2) Install the fasteners that secure the defroster duct to the instrument panel armature.

(3) Reinstall the instrument panel in the vehicle. (Refer to 23 - BODY/INSTRUMENT PANEL/INSTRUMENT PANEL ASSEMBLY - INSTALLATION).

(4) Reconnect the battery negative cable.

FLOOR DISTRIBUTION DUCTS

REMOVAL

(1) Roll back the carpet on the front floor from under the instrument panel toward the rear of the vehicle (Refer to 23 - BODY/INTERIOR/CARPETS AND FLOOR MATS - REMOVAL).

(2) Lift the center floor distribution duct upward far enough to disengage its locator hole from the weld stud on the front floor panel (Fig. 11).

(3) Pull the center floor distribution duct rearward far enough to disengage it from the floor outlet of the HVAC housing.

(4) Disassemble the right and/or left floor distribution ducts from the center floor distribution duct as required.

INSTALLATION

(1) Assemble the right and/or left floor distribution ducts onto the center floor distribution duct as required.

(2) Slide the center floor distribution duct under the instrument panel center stack far enough to engage it to the floor outlet of the HVAC housing.

(3) Align the locator hole on the center floor distribution duct with the weld stud on the front floor panel.

(4) Using hand pressure, push the locator hole of the center floor distribution duct down over the weld stud on the front floor panel.

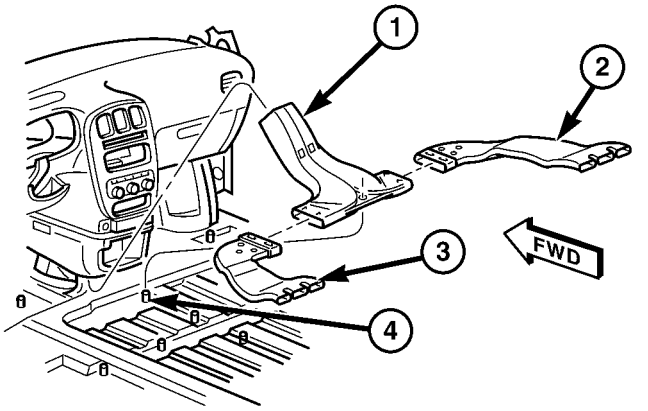

80a9054d

Fig. 11 Floor Distribution Ducts - LHD Shown, RHD Typical

1 - CENTER FLOOR DISTRIBUTION DUCT
2 - RIGHT FLOOR DISTRIBUTION DUCT
3 - LEFT FLOOR DISTRIBUTION DUCT
4 - WELD STUD

(5) Reinstall the carpet onto the front floor panel and under the instrument panel (Refer to 23 - BODY/INTERIOR/CARPETS AND FLOOR MATS - INSTALLATION).

HVAC HOUSING

REMOVAL

REMOVAL

WARNING: REFER TO THE APPLICABLE WARNINGS AND CAUTIONS FOR THIS SYSTEM BEFORE PERFORMING THE FOLLOWING OPERATION (Refer to 24 - HEATING & AIR CONDITIONING/PLUMBING - WARNING) AND (Refer to 24 - HEATING & AIR CONDITIONING/PLUMBING - CAUTION).

WARNING: ON VEHICLES EQUIPPED WITH AIRBAGS, DISABLE THE AIRBAG SYSTEM BEFORE ATTEMPTING ANY STEERING WHEEL, STEERING COLUMN, OR INSTRUMENT PANEL COMPONENT DIAGNOSIS OR SERVICE. DISCONNECT AND ISOLATE THE BATTERY NEGATIVE (GROUND) CABLE, THEN WAIT TWO MINUTES FOR THE AIRBAG SYSTEM CAPACITOR TO DISCHARGE BEFORE PERFORMING FURTHER DIAGNOSIS OR SERVICE. THIS IS THE ONLY SURE WAY TO DISABLE THE AIRBAG SYSTEM. FAILURE TO TAKE THE PROPER PRECAUTIONS COULD RESULT IN ACCIDENTAL AIRBAG DEPLOYMENT AND POSSIBLE PERSONAL INJURY.

HVAC HOUSING (Continued)

(1) Recover the refrigerant from the refrigerant system (Refer to 24 - HEATING & AIR CONDITIONING/PLUMBING - FRONT/REFRIGERANT - STANDARD PROCEDURE - REFRIGERANT RECOVERY).

(2) Drain the engine cooling system (Refer to 7 - COOLING - STANDARD PROCEDURE - COOLING SYSTEM DRAIN).

(3) Disconnect and isolate the negative battery cable.

(4) Remove the windshield wiper module from the vehicle (Refer to 8 - ELECTRICAL/WIPERS/WASHERS/WIPER MODULE - REMOVAL).

(5) Disconnect the liquid line and suction line from the expansion valve (Refer to 24 - HEATING & AIR CONDITIONING/PLUMBING - FRONT/LIQUID LINE - REMOVAL) and (Refer to 24 - HEATING & AIR CONDITIONING/PLUMBING - FRONT/SUCTION LINE - REMOVAL).

(6) Disconnect the heater hoses from the heater core tubes (Refer to 24 - HEATING & AIR CONDITIONING/PLUMBING - FRONT/HEATER HOSE - REMOVAL).

(7) On LHD models, remove the one bolt that secures the HVAC housing to the dash panel (Fig. 12).

(8) Remove the nuts that secure the HVAC housing to the dash panel in the engine compartment.

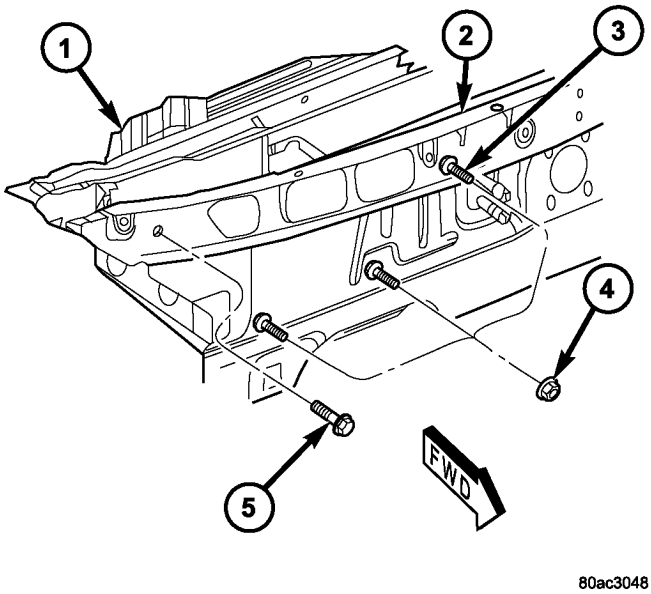

Fig. 12 HVAC Housing Retainers - RS Shown

1 - HVAC HOUSING
2 - DASH PANEL
3 - STUD (3 RS models, 4 RG models)
4 - NUT (3 RS models, 4 RG models)
5 - BOLT (RS only)

(9) Remove the instrument panel from the passenger compartment (Refer to 23 - BODY/INSTRUMENT PANEL/INSTRUMENT PANEL ASSEMBLY - REMOVAL).

(10) Remove the floor distribution duct (Refer to 24 - HEATING & AIR CONDITIONING/DISTRIBUTION - FRONT/FLOOR DISTRIBUTION DUCTS - REMOVAL).

(11) Remove the bolt or bolts (depending on application) that secure the HVAC housing to the passenger compartment side of the dash panel (Fig. 13) or (Fig. 14).

(12) Pull the HVAC housing rearward far enough for the mounting studs to clear the dash panel and remove the housing from the passenger compartment.

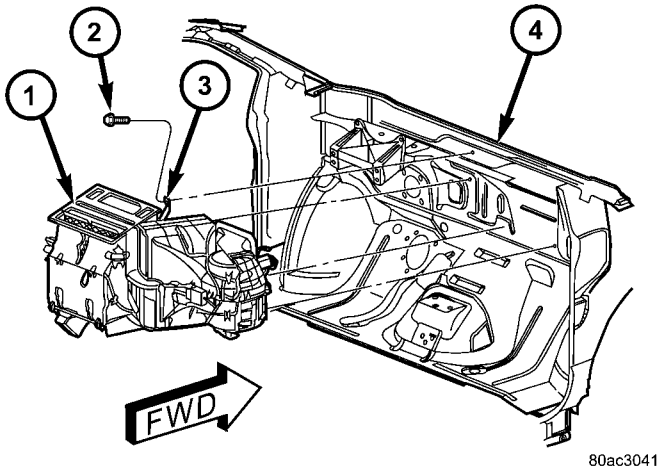

Fig. 13 HVAC Housing - LHD Models

1 - HVAC HOUSING
2 - BOLT
3 - BRACKET
4 - DASH PANEL

DISSASEMBLY

(1) Remove the HVAC housing from the vehicle and place it on a workbench (Refer to 24 - HEATING & AIR CONDITIONING/DISTRIBUTION - FRONT/HVAC HOUSING - REMOVAL).

(2) Remove the heater core tubes from the heater core (Refer to 24 - HEATING & AIR CONDITIONING/PLUMBING - FRONT/HEATER CORE - REMOVAL - HEATER CORE TUBES).

(3) Remove and discard the foam seal from the HVAC housing seal flange around the fresh air inlet opening and the expansion valve/evaporator tube opening.

(4) Remove the expansion valve from the evaporator inlet and outlet tube fittings (Refer to 24 - HEATING & AIR CONDITIONING/PLUMBING - FRONT/EXPANSION VALVE - REMOVAL).

HVAC HOUSING (Continued)

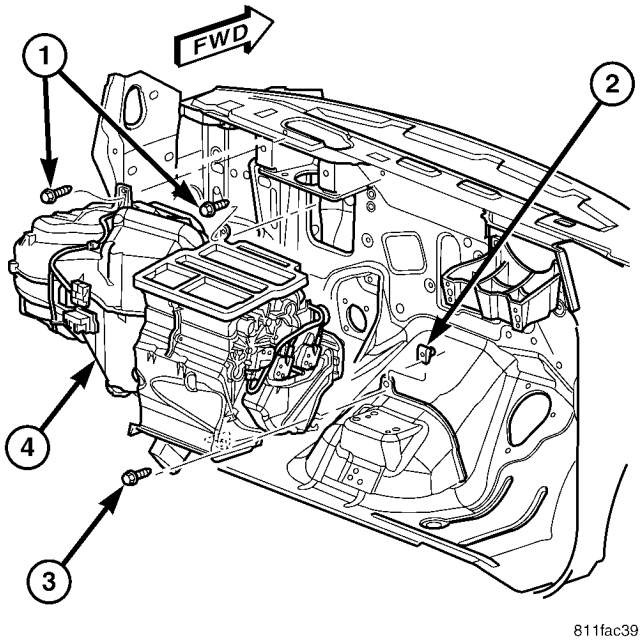

Fig. 14 HVAC Housing - RHD Models

1 - BOLT (2)
2 - RETAINER CLIP
3 - BOLT
4 - HVAC HOUSING

(5) Disconnect the HVAC wire harness connector from the blower motor.

(6) Disengage the HVAC wire harness from the routing clips molded into the outside of the HVAC housing.

(7) Remove the four screws that secure the top of the distribution housing to the HVAC housing (Fig. 15).

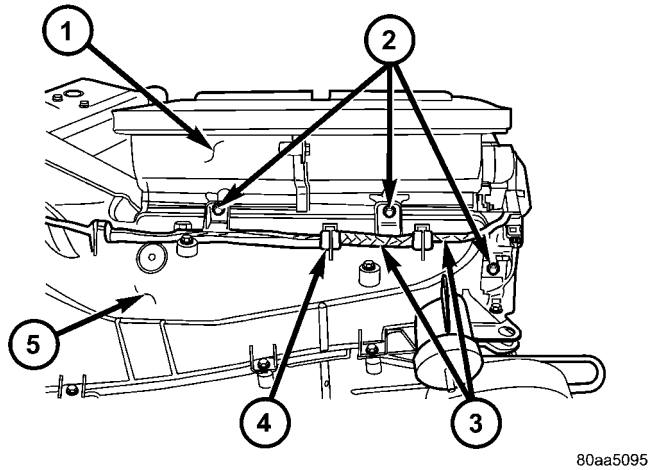

Fig. 15 Distribution Housing - LHD Shown, RHD Typical

1 - DISTRIBUTION HOUSING
2 - SCREWS (3)
3 - HVAC WIRING HARNESS
4 - ROUTING CLIP
5 - HVAC HOUSING

(8) Pull the top of the distribution housing away from the HVAC housing far enough to disengage the two hook retainers on the bottom of the distribution housing from the two receptacles on the HVAC housing (Fig. 16).

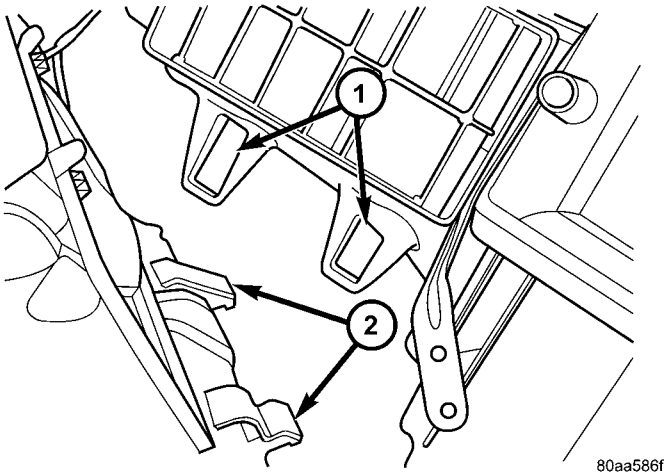

Fig. 16 Distribution Housing Retainers - Typical

1 - HVAC HOUSING RECEPTACLES
2 - DISTRIBUTION HOUSING RETAINERS

(9) Remove the two screws that secure the upper air inlet housing to the lower air inlet housing.

(10) Remove the three screws that secure the upper air inlet housing to the top of the HVAC housing. Be certain to remove the screw located just inside the inboard side of the fresh air intake opening.

(11) Remove the upper air inlet housing from the top of the HVAC housing to expose the recirculation air door and the blower motor and wheel (Fig. 17).

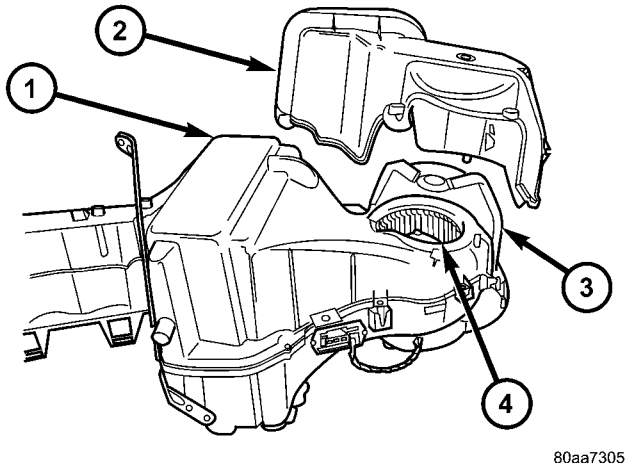

Fig. 17 Upper Intake Air Housing - LHD Shown, RHD Typical

1 - HVAC HOUSING
2 - UPPER AIR INLET HOUSING
3 - RECIRCULATION AIR DOOR
4 - BLOWER MOTOR AND WHEEL

HVAC HOUSING (Continued)

(12) Remove the screw and washer from the upper pivot of the recirculation door.

(13) Remove the twelve screws that secure the upper HVAC housing half to the lower half.

(14) Carefully separate and remove the upper half of the HVAC housing from the lower half. Be certain not to lose the rubber grommet for the HVAC wire harness evaporator temperature sensor take out. This grommet is located on the inboard side of the flange around the expansion valve/evaporator tube opening, where it is captured in a notched area between the upper and lower HVAC housing halves (Fig. 18).

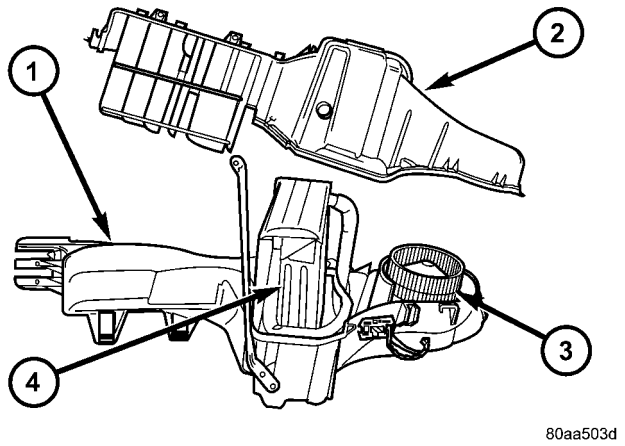

Fig. 18 HVAC Housing - LHD Shown, RHD Typical

1 - LOWER HVAC HOUSING
2 - UPPER HVAC HOUSING
3 - BLOWER MOTOR AND WHEEL
4 - A/C EVAPORATOR

INSTALLATION

ASSEMBLY

(1) Position the upper half of the HVAC housing onto the lower half. Be certain that the rubber grommet and the HVAC wire harness take out for the evaporator temperature sensor are captured in the notched area between the upper and lower HVAC housing halves.

(2) Install the twelve screws around the perimeter of the HVAC housing that secure the upper HVAC housing half to the lower half. Tighten the screws to 2 N·m (17 in. lbs.).

(3) Position the upper air inlet housing onto the top of the HVAC housing over the recirculation air door and the blower motor and wheel. Be certain that the upper pivot of the recirculation air door is captured in the pivot receptacle of the upper air inlet housing.

(4) Install the three screws that secure the upper air inlet housing to the top of the HVAC housing. Be certain to install the screw located just inside the inboard side of the fresh air intake opening. Tighten the screws to 2 N·m (17 in. lbs.).

(5) Install the two screws that secure the upper air inlet housing to the lower air inlet housing. Tighten the screws to 2 N·m (17 in. lbs.).

(6) Engage the two hook retainers on the bottom of the distribution housing to the two receptacles on the HVAC housing.

(7) Roll the top of the distribution housing up into position against the HVAC housing.

(8) Install the three screws that secure the top of the distribution housing to HVAC housing. Tighten the screws to 2 N·m (17 in. lbs.).

(9) Engage the HVAC wire harness in the routing clips molded into the outside of the HVAC housing.

(10) Reconnect the HVAC wire harness connector to the blower motor.

(11) Install the expansion valve onto the evaporator inlet and outlet tube fittings (Refer to 24 - HEATING & AIR CONDITIONING/PLUMBING - FRONT/EXPANSION VALVE - INSTALLATION).

(12) Install a new foam seal onto the HVAC housing seal flange around the fresh air inlet opening and the expansion valve/evaporator tube opening.

(13) Install the heater core tubes into the heater core (Refer to 24 - HEATING & AIR CONDITIONING/PLUMBING - FRONT/HEATER CORE - INSTALLATION - HEATER CORE TUBES).

(14) Install the HVAC housing into the vehicle (Refer to 24 - HEATING & AIR CONDITIONING/DISTRIBUTION - FRONT/HVAC HOUSING - INSTALLATION).

INSTALLATION

(1) Position the HVAC housing into the passenger compartment with the mounting studs located in their proper mounting holes in the dash panel.

(2) Install the bolt or bolts (depending on application) that secure the HVAC housing to the passenger compartment side of the dash panel. Tighten the bolt(s) to 3 N·m (26 in. lbs.).

(3) Install the nuts that secure the HVAC housing to the engine compartment side of the dash panel. Tighten the nuts to 7 N·m (62 in. lbs.).

(4) On LHD models, install the one bolt that secures the HVAC housing to the engine compartment side of the dash panel. Tighten the bolt to 4 N·m (35 in. lbs.).

(5) Reinstall the floor distribution duct (Refer to 24 - HEATING & AIR CONDITIONING/DISTRIBUTION - FRONT/FLOOR DISTRIBUTION DUCTS - INSTALLATION).

(6) Install the instrument panel (Refer to 23 - BODY/INSTRUMENT PANEL/INSTRUMENT PANEL ASSEMBLY - INSTALLATION).

HVAC HOUSING (Continued)

(7) Reconnect the heater hoses to the heater core tubes (Refer to 24 - HEATING & AIR CONDITIONING/PLUMBING - FRONT/HEATER HOSE - INSTALLATION).

(8) Reconnect the suction line and liquid line to the expansion valve (Refer to 24 - HEATING & AIR CONDITIONING/PLUMBING - FRONT/SUCTION LINE - INSTALLATION) and (Refer to 24 - HEATING & AIR CONDITIONING/PLUMBING - FRONT/LIQUID LINE - INSTALLATION).

(9) Install the windshield wiper module (Refer to 8 - ELECTRICAL/WIPERS/WASHERS/WIPER MODULE - INSTALLATION).

(10) Reconnect the negative battery cable.

(11) Refill the engine cooling system (Refer to 7 - COOLING - STANDARD PROCEDURE - COOLING SYSTEM REFILL).

(12) Evacuate the refrigerant system (Refer to 24 - HEATING & AIR CONDITIONING/PLUMBING - FRONT/REFRIGERANT - STANDARD PROCEDURE - REFRIGERANT SYSTEM EVACUATE).

(13) Charge the refrigerant system (Refer to 24 - HEATING & AIR CONDITIONING/PLUMBING - FRONT/REFRIGERANT - STANDARD PROCEDURE - REFRIGERANT SYSTEM CHARGE).

INSTRUMENT PANEL DEMISTER DUCTS

REMOVAL

WARNING: ON VEHICLES EQUIPPED WITH AIRBAGS, DISABLE THE AIRBAG SYSTEM BEFORE ATTEMPTING ANY STEERING WHEEL, STEERING COLUMN, OR INSTRUMENT PANEL COMPONENT DIAGNOSIS OR SERVICE. DISCONNECT AND ISOLATE THE BATTERY NEGATIVE (GROUND) CABLE, THEN WAIT TWO MINUTES FOR THE AIRBAG SYSTEM CAPACITOR TO DISCHARGE BEFORE PERFORMING FURTHER DIAGNOSIS OR SERVICE. THIS IS THE ONLY SURE WAY TO DISABLE THE AIRBAG SYSTEM. FAILURE TO TAKE THE PROPER PRECAUTIONS COULD RESULT IN ACCIDENTAL AIRBAG DEPLOYMENT AND POSSIBLE PERSONAL INJURY.

(1) Disconnect and isolate the battery negative cable.

(2) Remove the instrument panel from the vehicle. (Refer to 23 - BODY/INSTRUMENT PANEL/INSTRUMENT PANEL ASSEMBLY - REMOVAL).

(3) Place the instrument panel face down on a suitable work surface. Be certain to take the proper precautions to protect the face of the instrument panel from cosmetic damage.

(4) Remove the fasteners that secure the demister ducts to the instrument panel armature.

(5) Disengage the demister ducts from the demister outlets.

(6) Remove the demister ducts from the instrument panel.

INSTALLATION

WARNING: ON VEHICLES EQUIPPED WITH AIRBAGS, DISABLE THE AIRBAG SYSTEM BEFORE ATTEMPTING ANY STEERING WHEEL, STEERING COLUMN, OR INSTRUMENT PANEL COMPONENT DIAGNOSIS OR SERVICE. DISCONNECT AND ISOLATE THE BATTERY NEGATIVE (GROUND) CABLE, THEN WAIT TWO MINUTES FOR THE AIRBAG SYSTEM CAPACITOR TO DISCHARGE BEFORE PERFORMING FURTHER DIAGNOSIS OR SERVICE. THIS IS THE ONLY SURE WAY TO DISABLE THE AIRBAG SYSTEM. FAILURE TO TAKE THE PROPER PRECAUTIONS COULD RESULT IN ACCIDENTAL AIRBAG DEPLOYMENT AND POSSIBLE PERSONAL INJURY.

(1) Position the demister ducts to the instrument panel.

(2) Engage the demister ducts to the demister outlets.

(3) Install the fasteners that secure the demister ducts to the instrument panel armature.

(4) Reinstall the instrument panel into the vehicle. (Refer to 23 - BODY/INSTRUMENT PANEL/INSTRUMENT PANEL ASSEMBLY - INSTALLATION).

(5) Reconnect the battery negative cable.

INSTRUMENT PANEL DUCTS

REMOVAL

WARNING: ON VEHICLES EQUIPPED WITH AIRBAGS, DISABLE THE AIRBAG SYSTEM BEFORE ATTEMPTING ANY STEERING WHEEL, STEERING COLUMN, OR INSTRUMENT PANEL COMPONENT DIAGNOSIS OR SERVICE. DISCONNECT AND ISOLATE THE BATTERY NEGATIVE (GROUND) CABLE, THEN WAIT TWO MINUTES FOR THE AIRBAG SYSTEM CAPACITOR TO DISCHARGE BEFORE PERFORMING FURTHER DIAGNOSIS OR SERVICE. THIS IS THE ONLY SURE WAY TO DISABLE THE AIRBAG SYSTEM. FAILURE TO TAKE THE PROPER PRECAUTIONS COULD RESULT IN ACCIDENTAL AIRBAG DEPLOYMENT AND POSSIBLE PERSONAL INJURY.

(1) Disconnect and isolate the battery negative cable.

(2) Remove the instrument panel from the vehicle (Refer to 23 - BODY/INSTRUMENT PANEL/INSTRUMENT PANEL ASSEMBLY - REMOVAL).

(3) Place the instrument panel face down on a suitable work surface. Be certain to take the proper precautions to protect the face of the instrument panel from cosmetic damage.

(4) Remove the screws that secure the panel ducts to the instrument panel armature.

(5) Disengage the panel ducts from the panel outlets.

(6) Remove the panel ducts from the instrument panel.

INSTALLATION

(1) Position the panel ducts to the instrument panel.

(2) Engage the panel ducts to the panel outlets.

(3) Install the screws that secure the panel ducts to the instrument panel armature.

(4) Reinstall the instrument panel into the vehicle (Refer to 23 - BODY/INSTRUMENT PANEL/INSTRUMENT PANEL ASSEMBLY - INSTALLATION).

(5) Reconnect the battery negative cable.

DISTRIBUTION - REAR

TABLE OF CONTENTS

	page
AIR OUTLETS	
DESCRIPTION	56
REMOVAL	56
INSTALLATION	56
DISTRIBUTION DUCT	
REMOVAL	57
INSTALLATION	57
BLOWER MOTOR	
DESCRIPTION	57
OPERATION	57
DIAGNOSIS AND TESTING	
REAR BLOWER MOTOR	58
REMOVAL	58
INSTALLATION	60
HVAC HOUSING	
REMOVAL	60
INSTALLATION	62
REAR FLOOR HEAT DUCT	
REMOVAL	63
INSTALLATION	63

AIR OUTLETS

DESCRIPTION

Based upon the system mode selected, conditioned air can exit the rear HVAC housing through one or a combination of the two main housing outlets: air conditioner, or heater. Once the conditioned air exits the unit housing, it is directed through molded plastic ducts to the various outlets in the vehicle interior. These outlets and their locations are as follows:

- **Floor Outlets** - Three floor outlets with fixed vanes are located in the right quarter trim panel, near the floor. These outlets distribute air from the rear floor heat duct to the intermediate and rear seat occupants. The floor outlets are integral to the right quarter trim panel and, if faulty or damaged, the quarter trim panel must be replaced.
- **Overhead Outlets** - Four (two right side and two left side) fully adjustable outlets along the roof rails distribute air from the rear distribution duct and the headliner ducts to the intermediate and rear seat occupants. The headliner ducts are integral to the headliner panel. Each overhead outlet is housed in a headliner bezel. The two forward headliner bezels also feature a courtesy lamp, a fold-away coat hook, and a fold-away assist handle. The overhead outlets can be removed from the headliner bezels individually for service replacement.

REMOVAL

(1) Using a trim stick or another suitable wide flat-bladed tool, gently pry the thumb wheel end of the overhead outlet away from the pivot pin in the headliner bezel until one end of the outlet is released (Fig. 1).

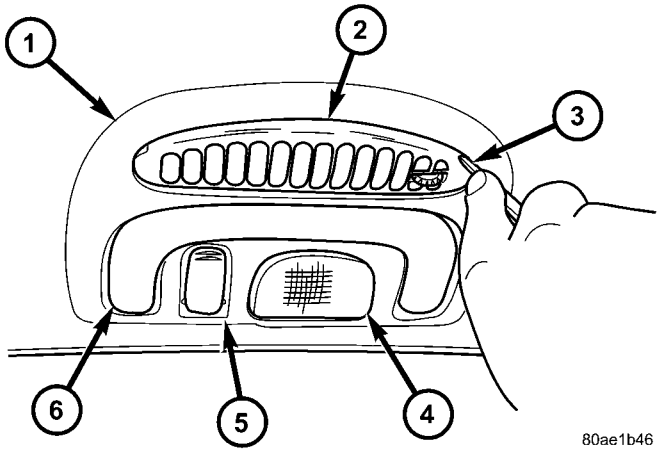

Fig. 1 Overhead Outlet

1 - HEADLINER BEZEL
2 - OVERHEAD OUTLET
3 - TRIM STICK
4 - COURTESY LAMP
5 - COAT HOOK
6 - ASSIST HANDLE

(2) Pull the opposite end of the overhead outlet away from its pivot pin in the headliner bezel until that end of the outlet is released.

(3) Remove the overhead outlet from the opening in the headliner bezel.

INSTALLATION

(1) Position the overhead outlet into the opening in the headliner bezel.

(2) Slide the non-thumb wheel end of the outlet onto the pivot pin in the headliner bezel. Using hand pressure, push the thumb wheel end outboard onto the pivot pin until it fully seats.

DISTRIBUTION DUCT

REMOVAL

(1) Remove the trim from the right quarter inner panel and the right D pillaR (Refer to 23 - BODY/INTERIOR/RIGHT QUARTER TRIM PANEL - REMOVAL).

(2) Slide the rear distribution duct upwards far enough to disengage it from the outlet at the top of the rear HVAC housing (Fig. 2).

(3) While pulling the lower end of the rear distribution duct away from the rear HVAC housing outlet, disengage the upper end of the distribution duct from the headliner duct.

(4) Remove the rea distribution duct from the vehicle.

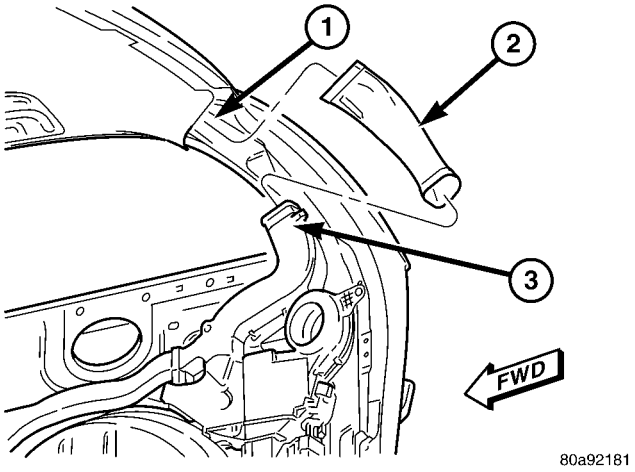

Fig. 2 Rear Distribution Duct

1 - HEADLINER DUCT
2 - REAR DISTRIBUTION DUCT
3 - REAR HVAC HOUSING OUTLET

INSTALLATION

(1) Align the upper end of the rear distribution duct to the headliner duct.

(2) Slide the upper end of the rear distribution duct onto the headliner duct far enough to align the lower end of the duct with the outlet at the top of the rear HVAC housing.

(3) Slide the rear distribution duct downwards far enough to engage it onto the outlet at the top of the rear HVAC housing.

(4) Reinstall the trim onto the right quarter inner panel and the right D pillar (Refer to 23 - BODY/INTERIOR/RIGHT QUARTER TRIM PANEL - INSTALLATION).

BLOWER MOTOR

DESCRIPTION

The blower motor is a 12-volt, Direct Current (DC) motor with a squirrel cage-type blower wheel that is secured to the blower motor shaft. The blower motor and wheel are located near the top of the rear HVAC housing in the passenger compartment behind the right rear wheel house. The rear HVAC housing must be removed from the vehicle to access the blower motor for service. The blower motor and blower motor wheel are a factory balanced unit and cannot be adjusted or repaired. If faulty or damaged, the blower motor and blower wheel must be replaced as a unit.

OPERATION

On models equipped with the Manual Temperature Control (MTC) system, the rear blower motor will operate only whenever the ignition switch is in the On position, the front blower control switch is in any position except Off and the rear blower control switch on the front A/C-heater control is in any position except Off. On models equipped with the Automatic Temperature Control (ATC) system, the blower motor will operate whenever the ignition switch is in the On position, the A/C-heater control power is turned on and the rear blower control switch on the front A/C-heater control is in any position except Off. The rear blower motor can only be turned off by turning off the rear system at the front A/C-heater control.

The rear blower motor receives battery current whenever the rear blower motor relay is energized. The rear blower motor relay output circuit is protected by a fuse in the Integrated Power Module (IPM) located in the engine compartment near the battery. In the MTC system, the rear blower motor speed is controlled by regulating the path to ground through the blower control switch and the blower motor resistor. In the ATC system, the rear blower motor speed is controlled by an electronic blower motor power module, which uses a pulse width modulated input from the ATC control module and feedback from the rear blower motor to regulate the blower motor ground path it provides. The rear blower motor and wheel are used to control the velocity of air moving through the rear HVAC housing. The rear blower motor controls the velocity of the air flowing through the rear HVAC housing by spinning the blower wheel within the housing at the selected speed or, in the ATC system, at the selected or programmed speed.

BLOWER MOTOR (Continued)

DIAGNOSIS AND TESTING

REAR BLOWER MOTOR

BLOWER MOTOR INOPERATIVE

For circuit descriptions and diagrams, refer to the appropriate wiring information. The wiring information includes wiring, diagrams, proper wire and connector repair procedures, further details on wire harness routing and retention, as well as pin-out and location views for the various wire harness connectors, splices and grounds.

BLOWER MOTOR ELECTRICAL DIAGNOSIS

(1) Check the fuse (Fuse 12 - 25 ampere) in the Integrated Power Module (IPM). If OK, go to Step 2. If not OK, repair the shorted circuit or component as required and replace the faulty fuse.

(2) Turn the ignition switch to the On position. Be certain that the rear A/C-heater control power is turned on. Check for battery voltage at the fuse (Fuse 12 - 25 ampere) in the IPM. If OK, go to Step 3. If not OK, check the rear blower motor relay.

(3) Turn the ignition switch to the Off position. Disconnect and isolate the battery negative cable. Disconnect the rear HVAC wire harness connector from the rear blower motor resistor block (Manual Temperature Control) or the rear blower motor power module (Automatic Temperature Control). Reconnect the battery negative cable. Turn the ignition switch to the On position. Be certain that the rear A/C-heater control power is turned on. Check for battery voltage at the fused rear blower motor relay output circuit cavity of the rear HVAC wire harness connector for the rear blower motor resistor block (MTC) or the rear blower motor power module (ATC). If OK, go to Step 4. If not OK, repair the open fused front blower motor relay output circuit to the IPM as required.

(4) Turn the ignition switch to the Off position. Disconnect and isolate the battery negative cable. Disconnect the rear blower motor pigtail wire connector from the rear HVAC wire harness (MTC) or the rear blower power module (ATC). Use jumper wires to connect a battery and ground feeds to the blower motor pigtail wire connector. The rear blower motor should operate. If OK with MTC, proceed to diagnosis of the rear blower motor resistor block (Refer to 24 - HEATING & AIR CONDITIONING/CONTROLS - REAR/BLOWER MOTOR RESISTOR - DIAGNOSIS AND TESTING). If OK with ATC, use a DRBIII scan tool to diagnose the rear blower motor power module. Refer to the appropriate diagnostic information. If not OK with MTC or ATC, replace the faulty rear blower motor.

BLOWER MOTOR NOISE OR VIBRATION

Refer to the Blower Motor Noise/Vibration Diagnosis chart for basic checks of the blower motor when a vibration or noise is present (Fig. 3).

REMOVAL

WARNING: REFER TO THE APPLICABLE WARNINGS AND CAUTIONS FOR THIS SYSTEM BEFORE PERFORMING THE FOLLOWING OPERATION (Refer to 24 - HEATING & AIR CONDITIONING/PLUMBING - WARNING) and (Refer to 24 - HEATING & AIR CONDITIONING/PLUMBING - CAUTION).

(1) Remove the rear HVAC housing from the vehicle (Refer to 24 - HEATING & AIR CONDITIONING/DISTRIBUTION/HVAC HOUSING - REMOVAL).

(2) Disconnect the rear blower motor pigtail wire connector.

NOTE: With the Manual Temperature Control system, the blower motor pigtail wire is connected to a take out and connector of the rear HVAC wire harness. With the Automatic Temperature Control system , the blower pigtail wire is connected to a receptacle on the blower motor power module.

BLOWER MOTOR (Continued)

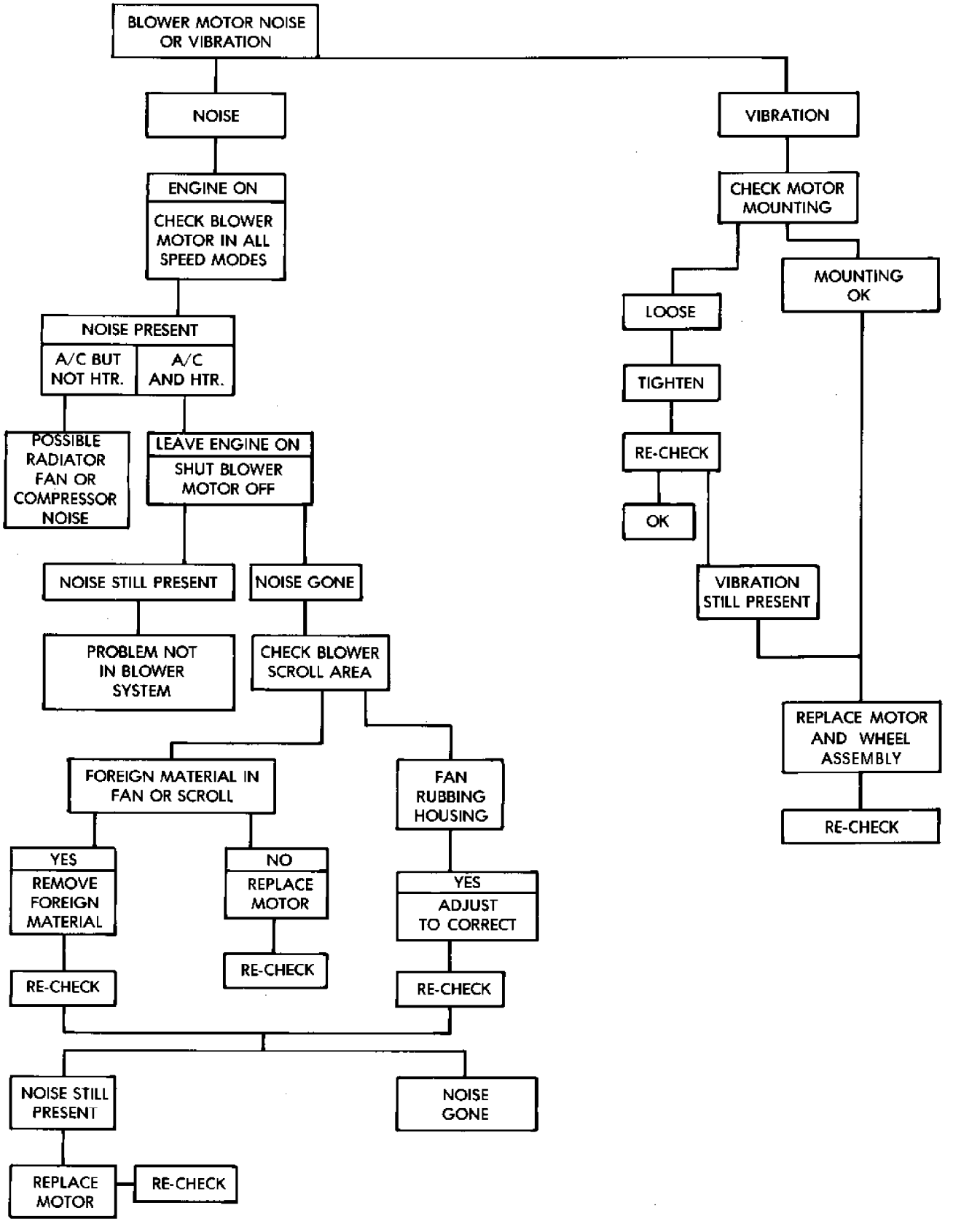

9124-6

Fig. 3 Blower Motor Noise/Vibration Diagnosis

BLOWER MOTOR (Continued)

(3) Remove the three screws that secure the rear blower motor to the outboard side of the rear HVAC housing (Fig. 4).

(4) Remove the rear blower motor from the rear HVAC housing.

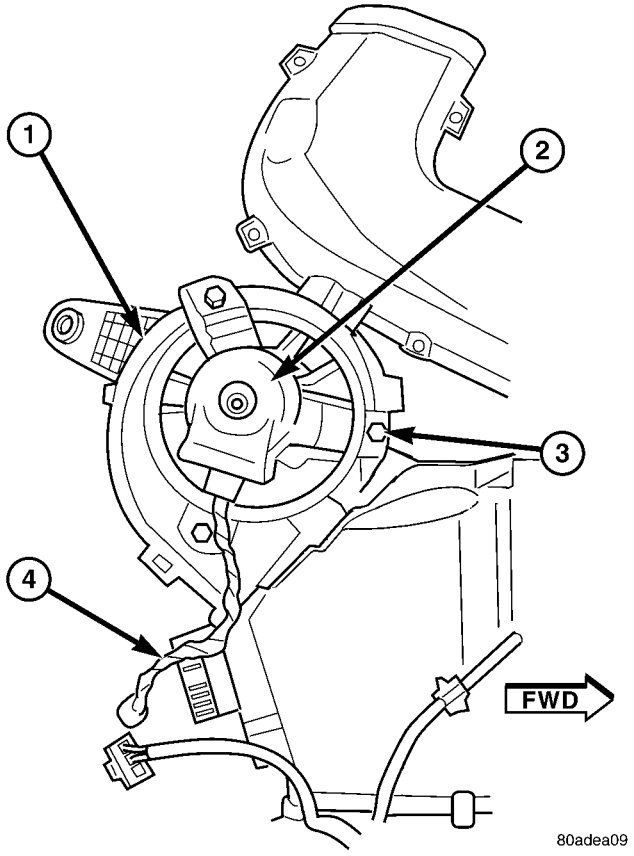

Fig. 4 Rear Blower Motor

1 - REAR HVAC HOUSING
2 - REAR BLOWER MOTOR
3 - SCREW (3)
4 - BLOWER MOTOR PIGTAIL WIRE

INSTALLATION

(1) Position the rear blower motor into the rear HVAC housing.

(2) Install the three screws that secure the blower motor to the rear HVAC housing. Tighten the screws to 2 N·m (17 in. lbs.).

(3) Reconnect the rear blower motor pigtail wire connector.

NOTE: With the Manual Temperature Control system , the blower pigtail wire is connected to a take out and connector of the rear HVAC wire harness. With the Automatic Temperature Control system, the blower pigtail wire is connected to a receptacle on the blower motor power module.

(4) Install the rear HVAC housing (Refer to 24 - HEATING & AIR CONDITIONING/DISTRIBUTION/ HVAC HOUSING - INSTALLATION).

HVAC HOUSING

REMOVAL

WARNING: REFER TO THE APPLICABLE WARNINGS AND CAUTIONS FOR THIS SYSTEM BEFORE PERFORMING THE FOLLOWING OPERATION (Refer to 24 - HEATING & AIR CONDITIONING/PLUMBING - FRONT - WARNING - A/C PLUMBING) and (Refer to 24 - HEATING & AIR CONDITIONING/PLUMBING - FRONT - CAUTION - A/C PLUMBING).

(1) Recover the refrigerant from the refrigerant system (Refer to 24 - HEATING & AIR CONDITIONING/PLUMBING - FRONT/REFRIGERANT - STANDARD PROCEDURE - REFRIGERANT RECOVERY).

(2) Drain the engine cooling system (Refer to 7 - COOLING - STANDARD PROCEDURE - COOLING SYSTEM DRAIN).

(3) Disconnect and isolate the negative battery cable.

(4) Raise and support the vehicle.

(5) Remove the nut that secures the underbody refrigerant line sealing plate to the rear evaporator extension line tapping plate that extends through the rear floor panel behind the right rear wheel housing (Fig. 5) and (Fig. 6).

(6) Disconnect the underbody refrigerant lines from the rear evaporator extension line tapping plate and remove and discard the O-ring seals.

(7) Install plugs in, or tape over the opened underbody refrigerant line fittings and the evaporator extension line sealing plate ports.

(8) Remove the nuts from the mounting studs that secure the rear HVAC housing to the rear floor panel behind the right rear wheel housing (Fig. 7).

(9) Lower the vehicle.

(10) Remove the right quarter trim panel and right D-pillar trim panel from the quarter inner panel (Refer to 23 - BODY/INTERIOR/QUARTER TRIM PANEL - REMOVAL).

(11) Remove the rear distribution duct from the rear HVAC housing and the rear roof duct (Refer to 24 - HEATING & AIR CONDITIONING/DISTRIBUTION/AIR OUTLETS - REMOVAL).

(12) Disconnect the body wire harness connector for the rear HVAC housing from the rear HVAC wire harness connector located near the expansion valve at the back of the housing.

HVAC HOUSING (Continued)

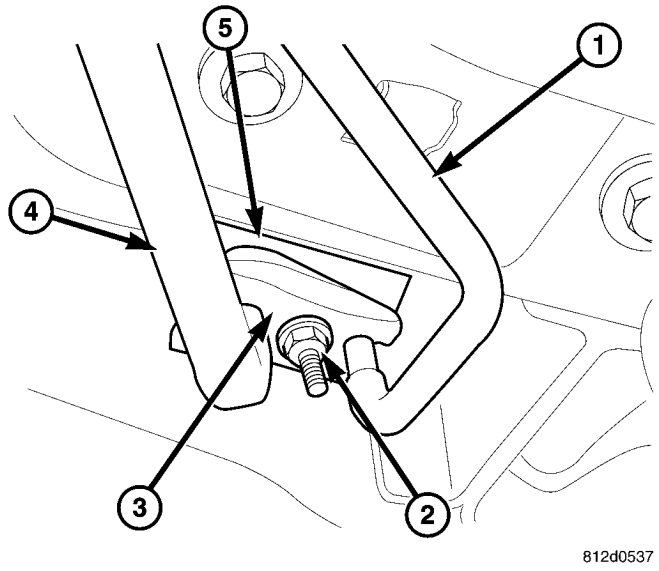

Fig. 5 Underbody A/C Line Rear Connections – with New Seating Element (NSE)

1 - UNDERBODY LIQUID LINE
2 - NUT
3 - SEALING PLATE
4 - UNDERBODY SUCTION LINE
5 - EXTENSION LINE TAPPING PLATE

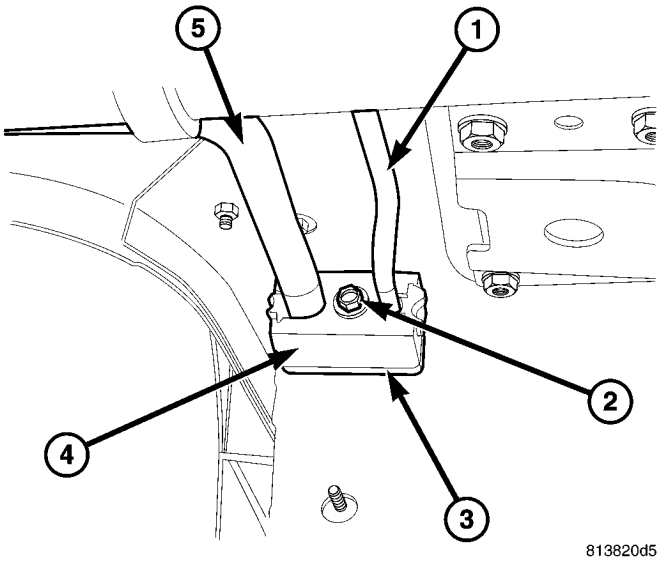

Fig. 6 Underbody A/C Line Rear Connections – without New Seating Element (NSE)

1 - UNDERBODY LIQUID LINE
2 - BOLT
3 - EXTENSION LINE TAPPING PLATE
4 - UNDERBODY SUCTION LINE
5 - SEALING PLATE

(13) Remove the two screws that secure the top of the quarter trim panel attaching bracket to the quarter inner panel.

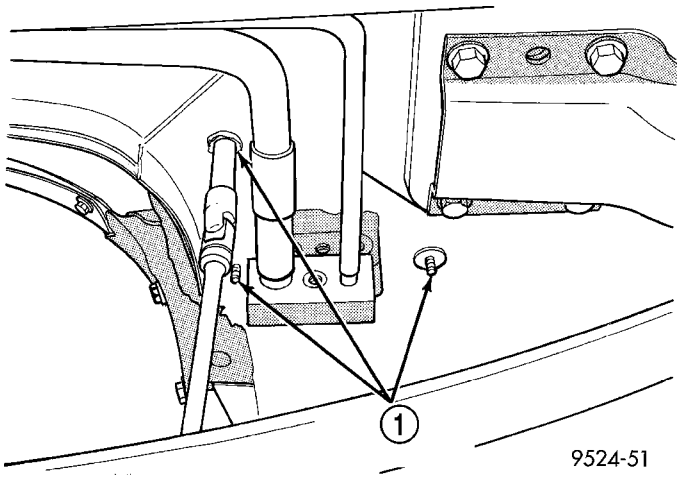

Fig. 7 Rear HVAC Housing Mounting Studs – Typical

1 - REAR HVAC HOUSING MOUNTING STUDS

(14) Remove the two screws that secure the bottom of the quarter trim panel attaching bracket to the rear HVAC housing.

(15) Remove the rear floor heat duct from the right quarter inner panel (Refer to 24 - HEATING & AIR CONDITIONING/DISTRIBUTION/REAR FLOOR HEAT DUCT - REMOVAL).

(16) Take the proper precautions to protect the carpeting below the rear heater core from spilled engine coolant and have absorbent toweling readily available to clean up any spills.

(17) Disconnect the heater hoses at the rear heater core (Refer to 24 - HEATING & AIR CONDITIONING/PLUMBING - REAR/HEATER HOSE - REMOVAL).

(18) Install plugs in, or tape over the opened heater core fittings and both heater hoses.

(19) Use absorbent toweling to mop up any engine coolant spills from the preceding operation.

(20) Remove the screw that secures the back of the rear HVAC housing to the right D-pillar (Fig. 8).

(21) Remove the screw that secures the front of the rear HVAC housing to the right quarter inner panel.

(22) Lift the rear HVAC housing up far enough for the lower mounting studs and the evaporator extension lines to clear the mounting holes in the rear floor panel.

(23) Remove the rear HVAC housing from the vehicle.

(24) Use absorbent toweling to mop up any engine coolant spills from the preceding operation.

HVAC HOUSING (Continued)

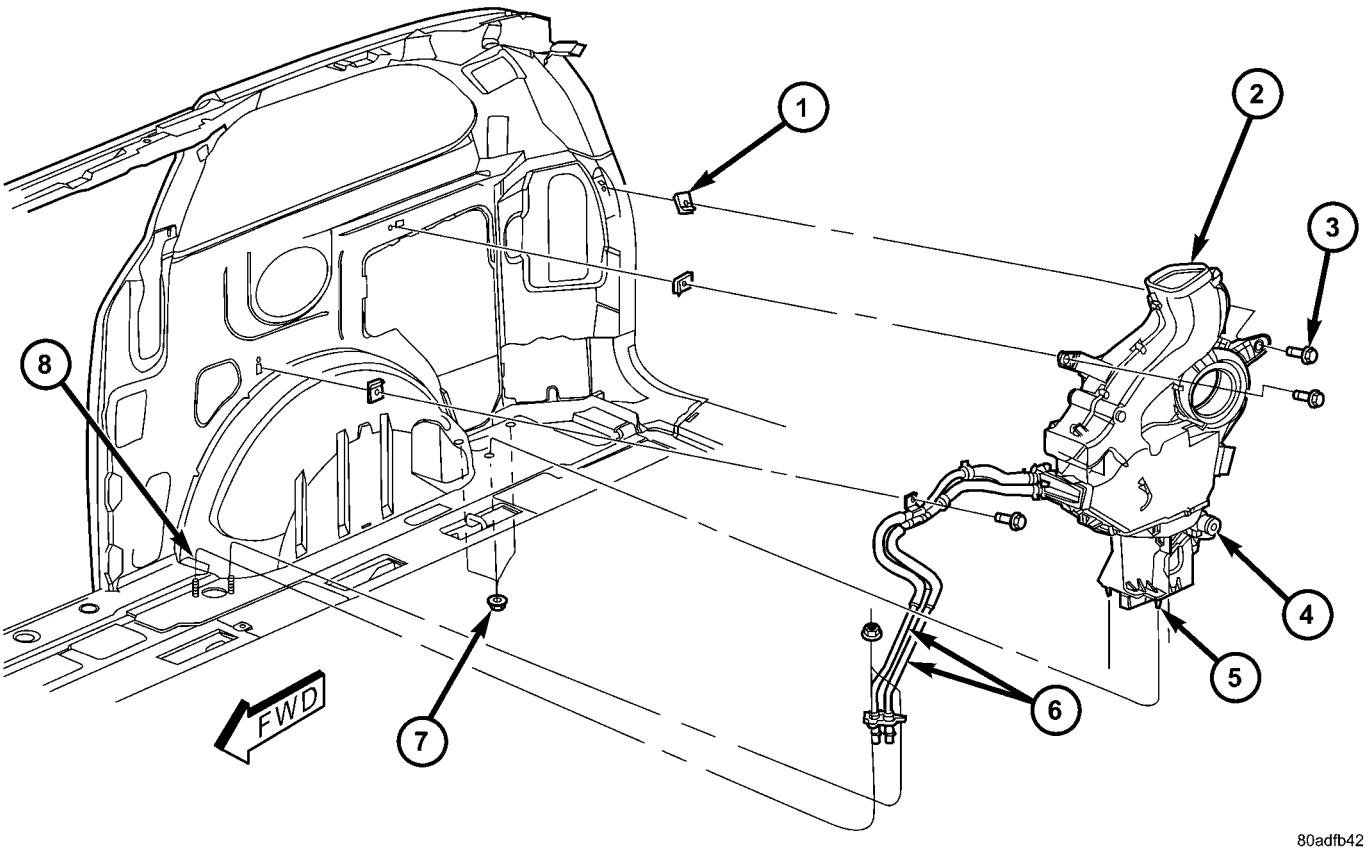

Fig. 8 Rear HVAC Housing – Typical

1 - U-NUT (3)
2 - REAR HVAC HOUSING
3 - SCREW (3)
4 - EXPANSION VALVE
5 - STUD (2 w/NSE, 3 wo/NSE)
6 - HEATER LINES
7 - NUT (5)
8 - STUD (2)

INSTALLATION

NOTE: If the rear heater core or the rear HVAC housing have been removed from the vehicle for service, the rear heater core may be pre-filled with the proper engine coolant mixture prior to reconnecting the heater hoses to the heater core hose fittings (Refer to 24 - HEATING & AIR CONDITIONING/ PLUMBING - REAR/HEATER CORE - STANDARD PROCEDURE - HEATER CORE FILLING).

(1) Position the rear HVAC housing into the vehicle with the evaporator extension line sealing plate inserted into the rectangular hole in the rear floor panel behind the right rear wheel house.

(2) Align the rear HVAC housing lower mounting studs with the holes in the rear floor panel and lower the rear HVAC housing to the floor.

(3) Install the screw that secures the front of the rear HVAC housing to the right quarter inner panel. Tighten the screw to 11 N·m (97 in. lbs.).

(4) Install the screw that secures the back of the rear HVAC housing to the right D-pillar. Tighten the screw to 11 N·m (97 in. lbs.).

(5) Remove the plugs or tape from both heater core fittings and both heater hoses.

(6) Reconnect the heater hoses to the rear heater core (Refer to 24 - HEATING & AIR CONDITIONING/PLUMBING - REAR/HEATER HOSE - INSTALLATION).

(7) Reinstall the rear floor heat duct onto the right quarter inner panel (Refer to 24 - HEATING & AIR CONDITIONING/DISTRIBUTION/REAR FLOOR HEAT DUCT - INSTALLATION).

(8) Install the two screws that secure the bottom of the quarter trim panel attaching bracket to the rear HVAC housing. Tighten the screws to 2 N·m (17 in. lbs.).

(9) Install and tighten the two screws that secure the top of the quarter trim panel attaching bracket to the quarter inner panel.

HVAC HOUSING (Continued)

(10) Reconnect the body wire harness connector for the rear HVAC housing to the rear HVAC wire harness connector located near the expansion valve at the back of the housing.

(11) Reinstall the rear distribution duct onto the rear HVAC housing and the rear roof duct (Refer to 24 - HEATING & AIR CONDITIONING/DISTRIBUTION/AIR OUTLETS - INSTALLATION).

(12) Reinstall the right quarter trim panel and right D-pillar trim panel onto the quarter inner panel (Refer to 23 - BODY/INTERIOR/QUARTER TRIM PANEL - INSTALLATION).

(13) Raise and support the vehicle.

(14) Install the three nuts that secure the rear HVAC housing mounting studs to the rear floor panel behind the right rear wheel housing. Tighten the nuts to 9 N·m (80 in. lbs.).

(15) Remove the tape or plugs from the underbody refrigerant line fittings and both ports in the rear evaporator extension line sealing plate.

(16) Lubricate new rubber O-ring seals with clean refrigerant oil and install them on the underbody refrigerant line fittings.

(17) Reconnect the underbody refrigerant line sealing plate to the evaporator extension line tapping plate.

(18) Install the nut that secures the underbody refrigerant line sealing plate to the evaporator extension line tapping plate. Tighten the nut to 23 N·m (17 ft. lbs.).

(19) Lower the vehicle.

(20) Reconnect the battery negative cable.

(21) Refill the engine cooling system (Refer to 7 - COOLING - STANDARD PROCEDURE - COOLING SYSTEM REFILL).

(22) Evacuate the refrigerant system (Refer to 24 - HEATING & AIR CONDITIONING/PLUMBING - FRONT/REFRIGERANT - STANDARD PROCEDURE - REFRIGERANT SYSTEM EVACUATE).

(23) Charge the refrigerant system (Refer to 24 - HEATING & AIR CONDITIONING/PLUMBING - FRONT/REFRIGERANT - STANDARD PROCEDURE - REFRIGERANT SYSTEM CHARGE).

(24) Run the HVAC Cooldown test to verify proper operation (Refer to 24 - HEATING & AIR CONDITIONING - DIAGNOSIS AND TESTING).

REAR FLOOR HEAT DUCT

REMOVAL

(1) Remove the trim from the right quarter inner panel (Refer to 23 - BODY/INTERIOR/RIGHT QUARTER TRIM PANEL - REMOVAL).

(2) Remove the two screws that secure the rear floor heat duct to the right quarter inner panel (Fig. 9).

(3) Slide the rear floor heat duct forward far enough to disengage it from the outlet on the front of the rear HVAC housing.

(4) Remove the rear floor heat duct from the vehicle.

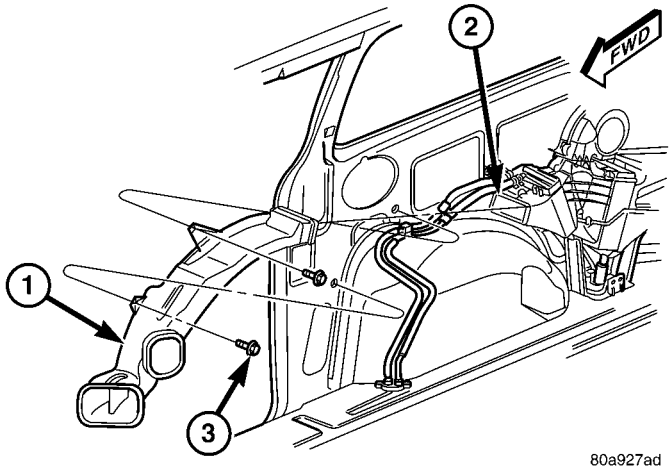

Fig. 9 Rear Floor Heat Duct

1 - REAR FLOOR HEAT DUCT
2 - REAR HVAC HOUSING OUTLET
3 - SCREW (2)

INSTALLATION

(1) Align the inlet end of rear floor heat duct with the outlet on the front of the rear HVAC housing.

(2) Slide the rear floor heat duct rearward far enough to fully engage the inlet end of the duct with the outlet on the rear HVAC housing.

(3) Install the two screws that secure the rear floor heat duct to the right quarter inner panel. Tighten the screws to 2 N·m (17 in. lbs.).

(4) Reinstall the trim onto the right quarter inner panel (Refer to 23 - BODY/INTERIOR/RIGHT QUARTER TRIM PANEL - INSTALLATION).

PLUMBING - FRONT

TABLE OF CONTENTS

page

PLUMBING - FRONT
DESCRIPTION 65
OPERATION 65
WARNING
ENGINE COOLING SYSTEM 65
A/C SYSTEM 66
CAUTION - A/C SYSTEM 66
DIAGNOSIS AND TESTING
REFRIGERANT SYSTEM LEAKS 67
SYSTEM CHARGE LEVEL TEST 67
STANDARD PROCEDURE
HANDLING TUBING AND FITTINGS 69
REFRIGERANT SYSTEM SERVICE EQUIPMENT 69
REFRIGERANT SYSTEM RECOVERY 70
REFRIGERANT SYSTEM EVACUATE 70
REFRIGERANT SYSTEM CHARGE 71
A/C COMPRESSOR
DESCRIPTION
A/C COMPRESSOR 72
HIGH PRESSURE RELIEF VALVE 72
OPERATION
A/C COMPRESSOR 72
HIGH PRESSURE RELIEF VALVE 72
DIAGNOSIS AND TESTING
A/C COMPRESSOR NOISE DIAGNOSIS 72
REMOVAL
A/C COMPRESSOR 73
A/C COMPRESSOR MOUNTING BRACKET - 2.4L ENGINE 74
INSTALLATION
A/C COMPRESSOR 74
A/C COMPRESSOR MOUNTING BRACKET - 2.4L ENGINE 75
A/C CONDENSER
DESCRIPTION 75
OPERATION 75
REMOVAL
2.4L/3.3L/3.8L ENGINES 76
2.5L/2.8L DIESEL ENGINES 77
INSTALLATION
2.4L/3.3L/3.8L ENGINES 77
2.5L/2.8L DIESEL ENGINES 78
A/C DISCHARGE LINE
REMOVAL 79
INSTALLATION 80
A/C EVAPORATOR
DESCRIPTION 80

page

OPERATION 80
REMOVAL 81
INSTALLATION 81
EXPANSION VALVE
DESCRIPTION 81
OPERATION 81
DIAGNOSIS AND TESTING
FRONT A/C EXPANSION VALVE 82
REMOVAL 82
INSTALLATION 83
HEATER CORE
DESCRIPTION 83
OPERATION 84
REMOVAL
FRONT HEATER CORE TUBES 84
FRONT HEATER CORE 85
INSTALLATION
FRONT HEATER CORE TUBES 85
FRONT HEATER CORE 86
HEATER INLET HOSE
REMOVAL 86
INSTALLATION 87
HEATER RETURN HOSE
REMOVAL 88
INSTALLATION 89
LIQUID LINE
REMOVAL 89
INSTALLATION 91
RECEIVER / DRIER
DESCRIPTION 92
OPERATION 92
REMOVAL 92
INSTALLATION 93
REFRIGERANT
DESCRIPTION 93
OPERATION 94
REFRIGERANT OIL
DESCRIPTION 94
OPERATION 94
STANDARD PROCEDURE
REFRIGERANT OIL LEVEL 94
SERVICE PORT VALVE CORE
DESCRIPTION 95
REMOVAL 95
INSTALLATION 95
SUCTION LINE
REMOVAL 96
INSTALLATION 97

PLUMBING - FRONT

DESCRIPTION

CAUTION: The system must be completely empty before opening any fitting or connection in the refrigeration system. Open fittings with caution even after the system has been emptied. If any pressure is noticed as a fitting is loosened, retighten fitting and evacuate the system again.
The use of correct wrenches when making connections is very important. Improper wrenches or improper use of wrenches can damage the fittings.
The internal parts of the A/C system will remain stable as long as moisture-free refrigerant and refrigerant oil is used. Abnormal amounts of dirt, moisture or air can upset the chemical stability. This may cause operational troubles or even serious damage if present in more than very small quantities. Before disconnecting a refrigerant line or hose, clean the outside of the fittings thoroughly to prevent contamination from entering the refrigerant system.
When opening a refrigeration system, have everything you will need to repair the system ready to minimize the amount of time the system is opened. Cap or plug all refrigerant line fittings as soon as they are opened. This will help prevent the entrance of dirt and moisture. All new lines and components should be capped or sealed until they are ready to be used. Before connecting a refrigerant line or hose, clean the outside of the fittings thoroughly to prevent contamination from entering the refrigerant system.
All tools, including the refrigerant dispensing manifold, manifold gauge set and test hoses should be kept clean and dry.

The A/C refrigerant lines and hoses are used to carry the refrigerant between the various A/C system components. The refrigerant lines and hoses for the R-134a system on this vehicle consist of a barrier-hose design with a nylon tube sandwiched between rubber layers. The nylon tube helps to contain the R-134a refrigerant, which has a smaller molecular structure than R-12 refrigerant. The ends of the refrigerant lines are made from lightweight aluminum or steel, and commonly use braze-less fittings.

Any kinks or sharp bends in the refrigerant lines and hoses will reduce the capacity of the entire A/C system and can reduce the flow of refrigerant in the system. The radius of all bends in the flexible hose refrigerant lines should be at least ten times the diameter of the hose and the refrigerant lines should be routed so they are at least 80 millimeters (3 inches) away from the exhaust manifold(s) and exhaust pipe(s).

OPERATION

High pressures are produced in the refrigerant system when the A/C compressor is operating. Extreme care must be exercised to make sure that each of the refrigerant system connections is pressure-tight and leak free. It is a good practice to inspect all flexible hose refrigerant lines at least once a year to make sure they are in good condition and properly routed.

The refrigerant lines and hoses are coupled to other A/C system components with block-type fittings. An O-ring seal, or a flat steel gasket with an integral O-ring (dual plane seal), is used to mate the refrigerant line fittings with A/C system components to ensure the integrity of the refrigerant system.

The refrigerant lines and hoses cannot be repaired and, if faulty or damaged, they must be replaced.

WARNING

ENGINE COOLING SYSTEM

WARNING: THE ENGINE COOLING SYSTEM IS DESIGNED TO DEVELOP INTERNAL PRESSURES OF 97 TO 123 KILOPASCALS (14 TO 18 POUNDS PER SQUARE INCH). DO NOT REMOVE OR LOOSEN THE COOLANT PRESSURE CAP, CYLINDER BLOCK DRAIN PLUGS, RADIATOR DRAIN, RADIATOR HOSES, HEATER HOSES, OR HOSE CLAMPS WHILE THE ENGINE COOLING SYSTEM IS HOT AND UNDER PRESSURE. FAILURE TO OBSERVE THIS WARNING CAN RESULT IN SERIOUS BURNS FROM THE HEATED ENGINE COOLANT. ALLOW THE VEHICLE TO COOL FOR A MINIMUM OF 15 MINUTES BEFORE OPENING THE COOLING SYSTEM FOR SERVICE.

PLUMBING - FRONT (Continued)

A/C SYSTEM

WARNING: THE AIR CONDITIONING SYSTEM CONTAINS REFRIGERANT UNDER HIGH PRESSURE. SEVERE PERSONAL INJURY MAY RESULT FROM IMPROPER SERVICE PROCEDURES. REPAIRS SHOULD ONLY BE PERFORMED BY QUALIFIED SERVICE PERSONNEL.

AVOID BREATHING THE REFRIGERANT AND REFRIGERANT OIL VAPOR OR MIST. EXPOSURE MAY IRRITATE THE EYES, NOSE, AND/OR THROAT. WEAR EYE PROTECTION WHEN SERVICING THE AIR CONDITIONING REFRIGERANT SYSTEM. SERIOUS EYE INJURY CAN RESULT FROM DIRECT CONTACT WITH THE REFRIGERANT. IF EYE CONTACT OCCURS, SEEK MEDICAL ATTENTION IMMEDIATELY.

DO NOT EXPOSE THE REFRIGERANT TO OPEN FLAME. POISONOUS GAS IS CREATED WHEN REFRIGERANT IS BURNED. AN ELECTRONIC LEAK DETECTOR IS RECOMMENDED.

IF ACCIDENTAL SYSTEM DISCHARGE OCCURS, VENTILATE THE WORK AREA BEFORE RESUMING SERVICE. LARGE AMOUNTS OF REFRIGERANT RELEASED IN A CLOSED WORK AREA WILL DISPLACE THE OXYGEN AND CAUSE SUFFOCATION.

THE EVAPORATION RATE OF R-134a REFRIGERANT AT AVERAGE TEMPERATURE AND ALTITUDE IS EXTREMELY HIGH. AS A RESULT, ANYTHING THAT COMES IN CONTACT WITH THE REFRIGERANT WILL FREEZE. ALWAYS PROTECT THE SKIN OR DELICATE OBJECTS FROM DIRECT CONTACT WITH THE REFRIGERANT.

THE R-134a SERVICE EQUIPMENT OR THE VEHICLE REFRIGERANT SYSTEM SHOULD NOT BE PRESSURE TESTED OR LEAK TESTED WITH COMPRESSED AIR. SOME MIXTURES OF AIR AND R-134a HAVE BEEN SHOWN TO BE COMBUSTIBLE AT ELEVATED PRESSURES. THESE MIXTURES ARE POTENTIALLY DANGEROUS, AND MAY RESULT IN FIRE OR EXPLOSION CAUSING INJURY OR PROPERTY DAMAGE.

CAUTION - A/C SYSTEM

CAUTION: Liquid refrigerant is corrosive to metal surfaces. Follow the operating instructions supplied with the service equipment being used.

Never add R-12 to a refrigerant system designed to use R-134a and do not use R-12 equipment or parts on the R-134a system. Damage to the system will result.

R-12 refrigerant oil must not be mixed with R-134a refrigerant oil. They are not compatible and damage to the system will result.

Do not overcharge the refrigerant system. Overcharging will cause excessive compressor head pressure and can cause noise and system failure.

Recover the refrigerant before opening any fitting or connection. Open the fittings with caution, even after the system has been discharged. Never open or loosen a connection before recovering the refrigerant.

If equipped, do not remove the secondary retention clip from any spring-lock coupler connection while the refrigerant system is under pressure. Recover the refrigerant before removing the secondary retention clip. Open the fittings with caution, even after the system has been discharged. Never open or loosen a connection before recovering the refrigerant.

Do not open the refrigerant system or uncap a replacement component until you are ready to service the system. This will prevent contamination in the system. Before disconnecting a component, clean the outside of the fittings thoroughly to prevent contamination from entering the refrigerant system. Immediately after disconnecting a component from the refrigerant system, seal the open fittings with a cap or plug.

Refrigerant oil will absorb moisture from the atmosphere if left uncapped. Do not open a container of refrigerant oil until you are ready to use it. Replace the cap on the oil container immediately after using. Store refrigerant oil only in a clean, airtight, and moisture-free container.

Keep service tools and the work area clean. Contamination of the refrigerant system must be avoided.

CAUTION: The use of A/C system sealers may result in damage to A/C refrigerant recovery/evacuation/recharging equipment and/or A/C systems.

Many federal, state/provincial and local regulations prohibit the recharge of A/C systems with known leaks. DaimlerChrysler recommends the detection of A/C system leaks through the use of approved leak detectors and fluorescent leak detection dyes. Vehicles found with A/C system sealers should be treated as contaminated and replacement of the entire A/C refrigerant system is recommended. A/C systems found to be contaminated with A/C system sealers, A/C stop-leak products or seal conditioners voids the warranty for the A/C system.

PLUMBING - FRONT (Continued)

DIAGNOSIS AND TESTING

REFRIGERANT SYSTEM LEAKS

WARNING: R-134a SERVICE EQUIPMENT OR VEHICLE A/C SYSTEM SHOULD NOT BE PRESSURE TESTED OR LEAK TESTED WITH COMPRESSED AIR. MIXTURE OF AIR and R-134a CAN BE COMBUSTIBLE AT ELEVATED PRESSURES. THESE MIXTURES ARE POTENTIALLY DANGEROUS AND MAY RESULT IN FIRE OR EXPLOSION CAUSING INJURY OR PROPERTY DAMAGE.
AVOID BREATHING A/C REFRIGERANT AND LUBRICANT VAPOR OR MIST. EXPOSURE MAY IRRITATE EYES, NOSE AND THROAT. USE ONLY APPROVED SERVICE EQUIPMENT MEETING SAE REQUIREMENTS TO DISCHARGE R-134a SYSTEM. IF ACCIDENTAL SYSTEM DISCHARGE OCCURS, VENTILATE WORK AREA BEFORE RESUMING SERVICE.

If the A/C system is not cooling properly, determine if the refrigerant system is fully charged with R-134a (Refer to 24 - HEATING & AIR CONDITIONING/PLUMBING - FRONT/REFRIGERANT - DIAGNOSIS AND TESTING - REFRIGERANT SYSTEM CHARGE LEVEL). If while performing this test A/C liquid line pressure is less than 345 kPa (50 psi) proceed to System Empty procedure. If liquid line pressure is greater than 345 kPa (50 psi) proceed to System Low procedure. If the refrigerant system is empty or low in refrigerant charge, a leak at any line fitting or component seal is likely. A review of the fittings, lines and components for oily residue is an indication of the leak location.

To detect a leak in the refrigerant system, perform one of the following procedures as indicated by the results of the refrigerant system charge level test.

SYSTEM EMPTY

(1) Evacuate the refrigerant system to the lowest degree of vacuum possible (approx. 28 in Hg.) (Refer to 24 - HEATING & AIR CONDITIONING/PLUMBING - FRONT/REFRIGERANT - STANDARD PROCEDURE - REFRIGERANT SYSTEM EVACUATE). Determine if the system holds a vacuum for 15 minutes. If vacuum is held, a leak is probably not present. If system will not maintain vacuum level, proceed with this procedure.

(2) Prepare a 0.284 Kg. (10 oz.) refrigerant charge to be injected into the system.

(3) Connect and dispense 0.284 Kg. (10 oz.) of refrigerant into the evacuated refrigerant system (Refer to 24 - HEATING & AIR CONDITIONING/PLUMBING - FRONT/REFRIGERANT - STANDARD PROCEDURE - REFRIGERANT SYSTEM CHARGE).

(4) Proceed to the SYSTEM LOW procedures.

SYSTEM LOW

(1) Position the vehicle in a wind-free work area. This will aid in detecting small leaks.

(2) Bring the refrigerant system up to operating temperature and pressure. This is done by allowing the engine to run for five minutes with the system set to the following:

- Transaxle in Park
- Engine idling
- Rear A/C Off (if equipped)
- A/C controls set to 100 percent outside air
- Blower switch in the highest speed position
- A/C in the ON position
- Front windows open

CAUTION: A leak detector designed for R-12 refrigerant (only) will not detect leaks in a R-134a refrigerant system.

(3) Shut off the vehicle and wait 2 to 7 minutes. Then use an Electronic Leak Detector that is designed to detect R-134a type refrigerant and search for leaks. Fittings, lines, or components that appear to be oily usually indicates a refrigerant leak. To inspect the evaporator core for leaks, insert the leak detector probe into the drain tube opening or a heat duct. A R-134a dye is available to aid in leak detection, use only DaimlerChrysler approved refrigerant dye.

SYSTEM CHARGE LEVEL TEST

WARNING: REFER TO THE APPLICABLE WARNINGS AND CAUTIONS FOR THIS SYSTEM BEFORE PERFORMING THE FOLLOWING OPERATION (Refer to 24 - HEATING & AIR CONDITIONING/PLUMBING - FRONT - WARNING - A/C PLUMBING) and (Refer to 24 - HEATING & AIR CONDITIONING/PLUMBING - FRONT - CAUTION - A/C PLUMBING).

NOTE: Always refer to the underhood HVAC Specification Label for the refrigerant fill specification of the vehicle being serviced.

The procedure that follows should be used to determine whether the refrigerant system contains the proper refrigerant charge. Symptoms of an improper refrigerant charge (low) include: poor air conditioner performance, fog emitted from the air conditioner outlets, a hissing sound from the expansion valve/evaporator area. There are two different methods with which the refrigerant charge level may be tested:

1. Using a DRBIII® scan tool, a thermocouple and the Charge Determination Chart (Fig. 1). Refer to the appropriate diagnostic information.

PLUMBING - FRONT (Continued)

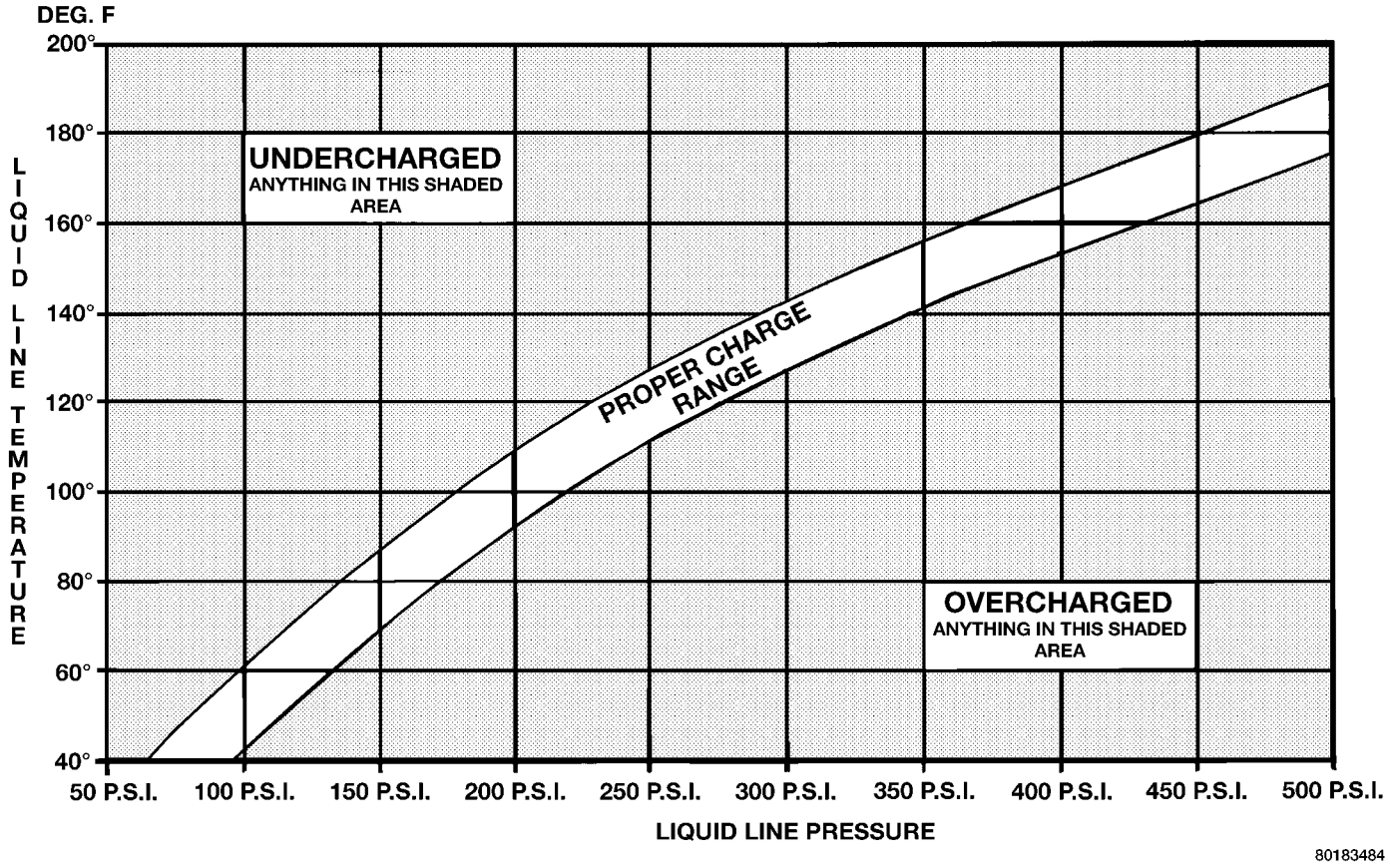

Fig. 1 Charge Determination Chart, Ambient Test Condition 85°F

2. Using a manifold gauge set, a thermocouple and the Charge Determination Chart (Fig. 1).

A temperature probe is required to measure liquid line temperature. The clamp-on, Type K thermocouple temperature probe used in this procedure is available through the DaimlerChrysler Professional Service Equipment (PSE) program. This probe (PSE #66-324-0014 or #80PK-1A) is compatible with temperature-measuring instruments that accept Type K thermocouples, and have a miniature connector input. Other temperature probes are available through aftermarket sources; however, all references in this procedure will reflect the use of the probe made available through the PSE program.

In order to use the temperature probe, a digital thermometer will also be required. If a digital thermometer is not available, an adapter is available through the PSE program that will convert any standard digital multimeter into a digital thermometer. This adapter is designed to accept any standard Type K thermocouple. If a digital multimeter is not available, this tool is also available through the PSE program.

NOTE: When connecting the service equipment couplings to the refrigerant system service ports, be certain that the valve of each coupling is fully closed. This will reduce the amount of effort required to make the connection.

(1) Remove the caps from the refrigerant system service ports and attach a manifold gauge set or a R-134a refrigerant recovery/recycling/charging station that meets SAE Standard J2210 to the refrigerant system.

(2) Attach a clamp-on thermocouple to the liquid line. The thermocouple must be placed as close to the A/C pressure transducer as possible to accurately observe liquid line temperature.

(3) Bring the refrigerant system up to operating temperature and pressure. This is done by allowing the engine to run at idle under the following conditions for five minutes.

(a) Front windows are open.

(b) Transaxle in Park.

(c) Front heater-A/C controls set to outside air, full cool, panel mode, blower high, and compressor engaged.

(d) If the vehicle is so equipped, the rear heater-A/C controls must be set to full cool and blower high.

PLUMBING - FRONT (Continued)

(4) Raise the liquid line (discharge) pressure to about 1793 kPa (260 psi) by placing a piece of cardboard over part of the front side of the condenser. To place the cardboard properly, remove the upper radiator sight shield from the front fascia. Cover only enough of the condenser to raise and maintain the liquid line pressure at the specified level.

(5) Observe the liquid line (discharge) pressure and liquid line temperature. Using the Charge Determination Chart (Fig. 1), determine whether the refrigerant system is operating within the Proper Charge Range.

(a) If the refrigerant system is operating in the Undercharged area of the chart, add 0.057 kilogram (0.125 pound or 2 ounces) of refrigerant to the system.

(b) If the refrigerant system is operating in the Overcharged area of the chart, reclaim 0.057 kilogram (0.125 pound or 2 ounces) of refrigerant from the system.

(6) Recheck the system charge level following each refrigerant adjustment. Continue this process until the system readings are in the Proper Charge Range area on the Charge Determination Chart.

STANDARD PROCEDURE

HANDLING TUBING AND FITTINGS

CAUTION: The system must be completely empty before opening any fitting or connection in the refrigeration system. Open fittings with caution even after the system has been emptied. If any pressure is noticed as a fitting is loosened, retighten fitting and evacuate the system again.

A good rule for the flexible hose lines is to keep the radius of all bends at least 10 times the diameter of the hose. Sharper bends will reduce the flow of refrigerant. The flexible hose lines should be routed so they are at least 3 inches (80 mm) from the exhaust manifold. Inspect all flexible hose lines to make sure they are in good condition and properly routed.

The use of correct wrenches when making connections is very important. Improper wrenches or improper use of wrenches can damage the fittings. The internal parts of the A/C system will remain stable as long as moisture-free refrigerant and refrigerant oil is used. Abnormal amounts of dirt, moisture or air can upset the chemical stability. This may cause operational troubles or even serious damage if present in more than very small quantities. Before disconnecting a component, clean the outside of the fittings thoroughly to prevent contamination from entering the refrigerant system.

When opening a refrigeration system, have everything you will need to repair the system ready. This will minimize the amount of time the system must be opened. Cap or plug all lines and fittings as soon as they are opened. This will help prevent the entrance of dirt and moisture. All new lines and components should be capped or sealed until they are ready to be used. Before connecting a component, clean the outside of the fittings thoroughly to prevent contamination from entering the refrigerant system.

All tools, including the refrigerant dispensing manifold, the manifold gauge set, and test hoses should be kept clean and dry.

Kinks in the refrigerant tubing or sharp bends in the refrigerant hose lines will greatly reduce the capacity of the entire system. High pressures are produced in the system when it is operating. Extreme care must be exercised to make sure that all connections are pressure tight. Dirt and moisture can enter the system when it is opened for repair or replacement of lines or components. The refrigerant oil will absorb moisture readily out of the air. This moisture will convert into acids within a closed system.

REFRIGERANT SYSTEM SERVICE EQUIPMENT

WARNING: EYE PROTECTION MUST BE WORN WHEN SERVICING AN AIR CONDITIONING REFRIGERANT SYSTEM. TURN OFF (ROTATE CLOCKWISE) ALL VALVES ON THE EQUIPMENT BEING USED BEFORE CONNECTING TO, OR DISCONNECTING FROM THE REFRIGERANT SYSTEM. FAILURE TO OBSERVE THESE WARNINGS MAY RESULT IN PERSONAL INJURY.

WARNING: REVIEW THE WARNINGS AND CAUTIONS IN THE FRONT OF THIS SECTION BEFORE PERFORMING THE FOLLOWING OPERATION (Refer to 24 - HEATING & AIR CONDITIONING/PLUMBING - WARNING) and (Refer to 24 - HEATING & AIR CONDITIONING/PLUMBING - CAUTION).

RECOVERY/RECYCLING STATION

When servicing the air conditioning system, a R-134a refrigerant recovery/recycling/charging station that meets SEA Standard J2210 must be used (Fig. 2). Contact an automotive service equipment supplier for refrigerant recovery/recycling/charging equipment. See the operating instructions supplied by the equipment manufacturer for proper care and use of this equipment.

PLUMBING - FRONT (Continued)

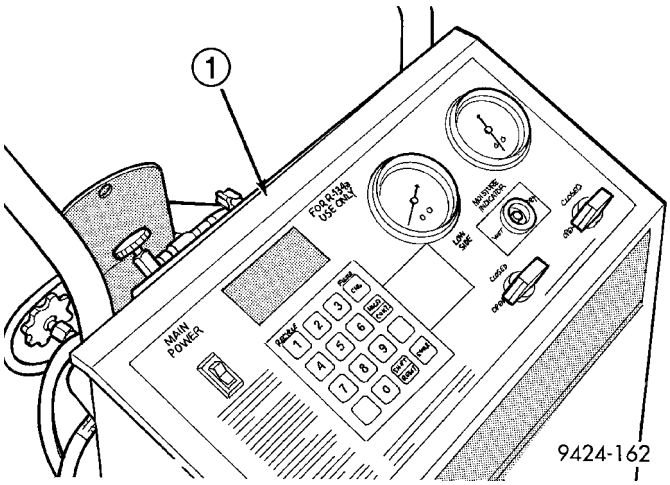

Fig. 2 Refrigerant Recovery/Recycling Station - Typical

1 - R-134a REFRIGERANT STATION

MANIFOLD GAUGE SET

CAUTION: Do not use an R-12 manifold gauge set on an R-134a system. The refrigerants are not compatible and system damage will result.

A manifold gauge set may be needed with some recovery/recycling/charging equipment (Fig. 3). The service hoses on the gauge set being used should have manual (turn wheel), or automatic back-flow valves at the service port connector ends. This will prevent refrigerant from being released into the atmosphere.

MANIFOLD GAUGE SET CONNECTIONS

CAUTION: Do not use an R-12 manifold gauge set on an R-134a system. The refrigerants are not compatible and system damage will result.

- **LOW PRESSURE GAUGE HOSE** - The low pressure hose (Blue with Black stripe) attaches to the low side service port. This service port is located on the suction line near the A/C compressor.
- **HIGH PRESSURE GAUGE HOSE** - The high pressure hose (Red with Black stripe) attaches to the high side service port. This service port is located on the liquid line fitting at the reciever/drier.
- **RECOVERY/RECYCLING/EVACUATION/ CHARGING HOSE** - The center manifold hose (Yellow, or White, with Black stripe) is used to recover, evacuate, and charge the refrigerant system. When the low or high pressure valves on the manifold gauge set are opened, the refrigerant in the system will escape through this hose.

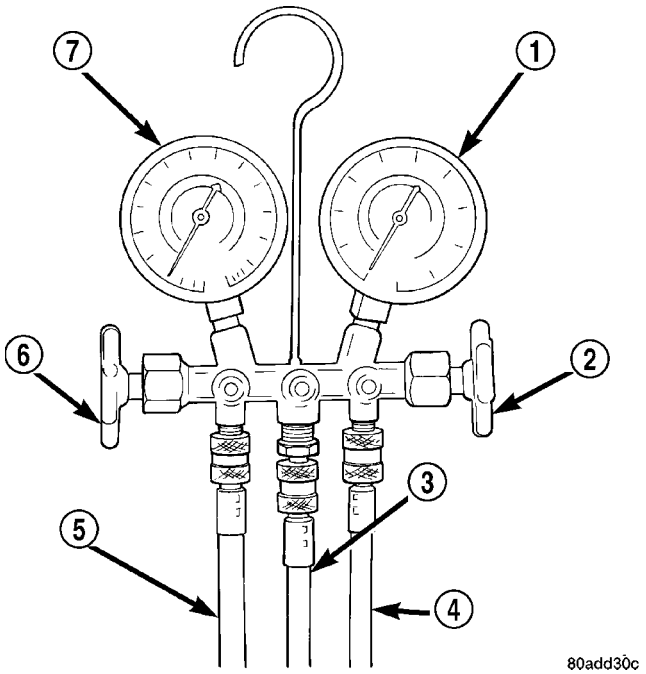

Fig. 3 Manifold Gauge Set - Typical

1 - HIGH PRESSURE GAUGE
2 - VALVE
3 - VACUUM/REFRIGERANT HOSE (YELLOW W/BLACK STRIPE)
4 - HIGH PRESSURE HOSE (RED W/BLACK STRIPE)
5 - LOW PRESSURE HOSE (BLUE W/BLACK STRIPE)
6 - VALVE
7 - LOW PRESSURE GAUGE

REFRIGERANT SYSTEM RECOVERY

WARNING: REFER TO THE APPLICABLE WARNINGS AND CAUTIONS FOR THIS SYSTEM BEFORE PERFORMING THE FOLLOWING OPERATION (Refer to 24 - HEATING & AIR CONDITIONING/PLUMBING - FRONT - WARNING - A/C PLUMBING) and (Refer to 24 - HEATING & AIR CONDITIONING/PLUMBING - FRONT - CAUTION - A/C PLUMBING).

A R-134a refrigerant recovery/recycling/charging station that meets SAE Standard J2210 must be used to recover the refrigerant from an R-134a refrigerant system. Refer to the operating instructions supplied by the equipment manufacturer for the proper care and use of this equipment.

REFRIGERANT SYSTEM EVACUATE

NOTE: Special effort must be used to prevent moisture from entering the A/C system oil. Moisture in the oil is very difficult to remove and will cause a reliability problem with the compressor.

PLUMBING - FRONT (Continued)

If a compressor designed to use R-134a refrigerant is left open to the atmosphere for an extended period of time. It is recommended that the refrigerant oil be drained and replaced with new oil or a new compressor be used. This will eliminate the possibility of contaminating the refrigerant system.

If the refrigerant system has been open to the atmosphere, it must be evacuated before the system can be filled. Moisture and air mixed with the refrigerant will raise the compressor head pressure above acceptable operating levels. This will reduce the performance of the air conditioner and damage the compressor. Moisture will boil at near room temperature when exposed to vacuum. A R-134a refrigerant recovery/recycling/charging station that meets SAE Standard J2210 must be used to evacuate the refrigerant system. See the operating instructions supplied by the equipment manufacturer for proper care and use of this equipment. To evacuate the refrigerant system, use the following procedure:

NOTE: When connecting the service equipment couplings to the refrigerant system service ports, be certain that the valve of each coupling is fully closed. This will reduce the amount of effort required to make the connection.

(1) Recover the refrigerant system (Refer to 24 - HEATING & AIR CONDITIONING/PLUMBING - STANDARD PROCEDURE).

(2) Connect a suitable charging station, refrigerant recovery machine or a manifold gauge set with vacuum pump and refrigerant recovery equipment.

(3) Open the suction and discharge valves and start the vacuum pump. The vacuum pump should run a minimum of 45 minutes prior to charge to eliminate all moisture in system. When the suction gauge reads -88 kPa (-26 in. Hg) vacuum or greater for 30 minutes, close all valves and turn off vacuum pump. If the system fails to reach specified vacuum, the refrigerant system likely has a leak that must be corrected. If the refrigerant system maintains specified vacuum for at least 30 minutes, start the vacuum pump, open the suction and discharge valves. Then allow the system to evacuate an additional 10 minutes.

(4) Close all valves. Turn off and disconnect the vacuum pump.

(5) Charge the refrigerant system (Refer to 24 - HEATING & AIR CONDITIONING/PLUMBING - STANDARD PROCEDURE).

REFRIGERANT SYSTEM CHARGE

WARNING: REFER TO THE APPLICABLE WARNINGS AND CAUTIONS FOR THIS SYSTEM BEFORE PERFORMING THE FOLLOWING OPERATION (Refer to 24 - HEATING & AIR CONDITIONING/PLUMBING - FRONT - WARNING - A/C PLUMBING) and (Refer to 24 - HEATING & AIR CONDITIONING/PLUMBING - FRONT - CAUTION - A/C PLUMBING).

After all refrigerant system leaks have been repaired and the refrigerant system has been evacuated, a refrigerant charge can be injected into the system. For the proper amount of the refrigerant charge, refer to REFRIGERANT CHARGE CAPACITY. A R-134a refrigerant recovery/recycling/charging station that meets SAE Standard J2210 must be used to charge the refrigerant system with R-134a refrigerant. See the operating instructions supplied by the equipment manufacturer for proper care and use of this equipment.

REFRIGERANT CHARGE CAPACITY

NOTE: Always refer to the underhood HVAC Specification Label for the refrigerant fill specification of the vehicle being serviced.

CHARGING PROCEDURE

CAUTION: A small amount of refrigerant oil is removed from the A/C system each time the refrigerant system is recovered and evacuated. Before charging the A/C system, you MUST replenish any oil lost during the recovery process. Refer the equipment manufacturer instructions for more information.

(1) Evacuate the refrigerant system. (Refer to 24 - HEATING & AIR CONDITIONING/PLUMBING - FRONT/REFRIGERANT - STANDARD PROCEDURE - REFRIGERANT SYSTEM EVACUATE).

(2) A manifold gauge set and a R-134a refrigerant recovery/recycling/charging station that meets SAE Standard J2210 should still be connected to the refrigerant system.

(3) Measure the proper amount of refrigerant and heat it to 52° C (125° F) with the charging station. See the operating instructions supplied by the equipment manufacturer for proper use of this equipment.

PLUMBING - FRONT (Continued)

(4) Open both the suction and discharge valves, then open the charge valve to allow the heated refrigerant to flow into the system.

(5) When the transfer of refrigerant has stopped, close both the suction and discharge valves.

(6) If all of the refrigerant charge did not transfer from the dispensing device, open all of the windows in the vehicle and set the heater-air conditioner controls so that the compressor is engaged and the blower motor is operating at its lowest speed setting. Run the engine at a steady high idle (about 1400 rpm). If the compressor will not engage, test the compressor clutch control circuit and repair as required.

(7) Open the suction valve to allow the remaining refrigerant to transfer to the refrigerant system.

WARNING: TAKE CARE NOT TO OPEN THE DISCHARGE (HIGH PRESSURE) VALVE AT THIS TIME.

(8) Close the suction valve and test the system performance. (Refer to 24 - HEATING & AIR CONDITIONING - STANDARD PROCEDURE - A/C PERFORMANCE TEST).

(9) Disconnect the charging station and manifold gauge set from the refrigerant system service ports.

(10) Reinstall the caps onto the refrigerant system service ports.

(11) Run the HVAC Control Cooldown test to verify proper operation(Refer to 24 - HEATING & AIR CONDITIONING - DIAGNOSIS AND TESTING).

A/C COMPRESSOR

DESCRIPTION

A/C COMPRESSOR

Vehicles equipped with the 2.4L gasoline, 2.5L diesel, 2.8L diesel and 3.3L gasoline engines with the front heating-A/C system only, use the Denso 10S17 A/C compressor. Vehicles equipped with the 3.3L and the 3.8L gasoline engines with the optional rear heating-A/C system use the Denso 10S20 A/C compressor. Both A/C compressors include an integral high pressure relief valve. The A/C compressor is secured to a mounting bracket on the 2.4L gasoline engine and directly to the cylinder block on the 2.5L diesel, 2.8L diesel, 3.3L gasoline and 3.8L gasoline engines.

HIGH PRESSURE RELIEF VALVE

A high pressure relief valve is located on the rear of the A/C compressor. This mechanical valve is designed to vent refrigerant from the A/C system to protect against damage to the compressor and other system components, caused by condenser air flow restriction or an overcharge of refrigerant.

OPERATION

A/C COMPRESSOR

The A/C compressor is driven by the engine through an electric clutch, drive pulley and belt arrangement. The compressor is lubricated by refrigerant oil that is circulated throughout the refrigerant system with the refrigerant.

The compressor draws in low-pressure refrigerant vapor from the evaporator through its suction port. It then compresses the refrigerant into a high-pressure, high-temperature refrigerant vapor. The compressor pumps the high-pressure refrigerant vapor to the condenser through the compressor discharge port.

The compressor cannot be repaired. If faulty or damaged, the entire compressor assembly must be replaced. The compressor clutch, pulley and clutch coil are available for service.

HIGH PRESSURE RELIEF VALVE

The high pressure relief valve vents the system when a discharge pressure of 3445 to 4135 kPa (500 to 600 psi) or above is reached. The valve closes when a minimum discharge pressure of 2756 kPa (400 psi) is reached.

The high pressure relief valve vents only enough refrigerant to reduce the system pressure, and then re-seats itself. The majority of the refrigerant is conserved in the system. If the valve vents refrigerant, it does not mean that the valve is faulty.

The high pressure relief valve is a factory-calibrated unit. The valve cannot be adjusted or repaired, and must not be removed or otherwise disturbed. The valve is only serviced as a part of the compressor assembly.

DIAGNOSIS AND TESTING

A/C COMPRESSOR NOISE DIAGNOSIS

Excessive noise while the air conditioning compressor is operating can be caused by loose compressor mounts, a loose compressor clutch, or high operating pressures in the refrigerant system. Verify compressor drive belt condition, proper compressor mounting, correct refrigerant charge level, and compressor head pressure before compressor repair is performed.

With the close tolerances within the compressor, it is possible to experience a temporary lockup. The longer the compressor is inactive, the more likely the condition is to occur. This condition is the result of normal refrigerant migration within the refrigerant system caused by ambient temperature changes. The refrigerant migration may wash the refrigerant oil out of the compressor.

A/C COMPRESSOR (Continued)

NOTE: Prior to a vehicle being removed from service or stored for more than two weeks, the compressor should be operated to ensure adequate refrigerant oil distribution throughout the system components. Turn on the air conditioner for a minimum of five minutes with outside air and the highest blower speed selected.

BELT NOISE

If the compressor drive belt slips at initial start-up, it does not necessarily mean the compressor has failed. The following procedure can be used to identify a compressor drive belt noise problem.

A. Start the vehicle and run at idle.

B. Turn the air conditioner On and listen for belt squeal.

C. If belt squeal is heard, turn the air conditioner Off immediately.

If the belt squeal stops when the air conditioner is turned Off, perform the following repair procedures.

(1) Using an appropriate sized oil filter wrench or a strap wrench, grasp the outer diameter of the compressor clutch hub. While facing the compressor, rotate the hub clockwise, then counterclockwise. If the hub rotates, proceed to the next step. If the hub will not rotate, the compressor is internally damaged, and must be replaced.

(2) Turn the hub clockwise five complete revolutions and remove the tool.

(3) Start the vehicle and run at idle.

(4) Turn the air conditioner On. Observe the compressor and the system for normal operation, noting cooling performance and noise levels. Operate for five minutes before turning the air conditioner Off. If acceptable cooling performance is observed during compressor operation, the compressor does not need to be replaced.

(5) Inspect the drive belt for wear, damage, and proper tension. (Refer to 7 - COOLING/ACCESSORY DRIVE/DRIVE BELTS - DIAGNOSIS AND TESTING).

REMOVAL

A/C COMPRESSOR

WARNING: REFER TO THE APPLICABLE WARNINGS AND CAUTIONS FOR THIS SYSTEM BEFORE PERFORMING THE FOLLOWING OPERATION (Refer to 24 - HEATING & AIR CONDITIONING/PLUMBING - FRONT - WARNING - A/C PLUMBING) and (Refer to 24 - HEATING & AIR CONDITIONING/PLUMBING - FRONT - CAUTION - A/C PLUMBING).

(1) Recover the refrigerant from the refrigerant system (Refer to 24 - HEATING & AIR CONDITIONING/PLUMBING - FRONT/REFRIGERANT - STANDARD PROCEDURE - REFRIGERANT SYSTEM RECOVERY).

(2) Disconnect and isolate the negative battery cable.

(3) Remove the nuts that secure the A/C suction line and the A/C discharge line to the A/C compressor.

(4) Disconnect the A/C suction line and the A/C discharge line from the A/C compressor.

(5) Remove the O-ring seal and gasket from the suction and discharge line fittings and discard.

(6) Install plugs in, or tape over the opened suction and discharge fittings and the compressor ports.

(7) Raise and support the vehicle.

(8) Remove the accessory drive belt (Refer to 7 - COOLING/ACCESSORY DRIVE/DRIVE BELTS - REMOVAL).

(9) Disconnect the wire harness connector from the compressor clutch coil wire connector located on the top of the A/C compressor (Fig. 4) or (Fig. 5).

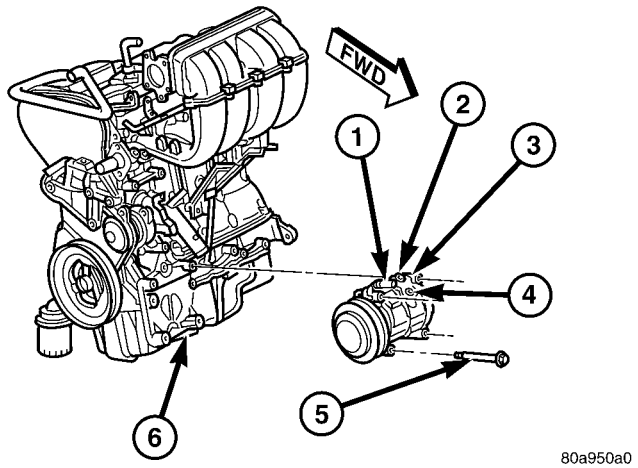

Fig. 4 A/C Compressor - 2.4L Shown, 2.5L/2.8L Typical

1 - CLUTCH COIL WIRE CONNECTOR
2 - DISCHARGE PORT
3 - A/C COMPRESSOR
4 - SUCTION PORT
5 - BOLT (4)
6 - A/C COMPRESSOR MOUNTING BRACKET

(10) On models with the 2.4L, 2.5L and 2.8L engine, remove the four bolts that secure the A/C compressor to the mounting bracket on the engine (2.4L), or the cylinder block (2.5L/2.8L).

A/C COMPRESSOR (Continued)

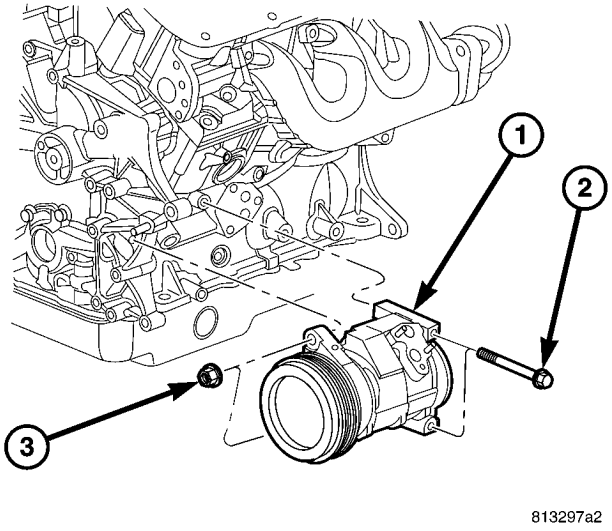

Fig. 5 A/C Compressor - 3.8L Shown, 3.3L Typical

1 - A/C COMPRESSOR
2 - BOLT (2)
3 - NUT (2)

(11) On models with the 3.3L and 3.8L engines, disengage the retainer on the engine wire harness compressor clutch coil take out from the bracket on the top of the A/C compressor and remove the two bolts and the two nuts that secure the A/C compressor to the engine.

NOTE: If a replacement A/C compressor is being installed, be certain to drain and measure the refrigerant oil contained in the removed compressor. This will determine how much oil the replacement A/C compressor must contain before it is installed (Refer to 24 - HEATING & AIR CONDITIONING/ PLUMBING - FRONT/REFRIGERANT OIL - STANDARD PROCEDURE - REFRIGERANT OIL LEVEL).

NOTE: The receiver/drier should always be replaced when the A/C compressor is replaced. This will help remove any contaminants including moisture from the system.

(12) Remove the A/C compressor from the engine compartment.

A/C COMPRESSOR MOUNTING BRACKET - 2.4L ENGINE

(1) Remove the A/C compressor from the mounting bracket (Refer to 24 - HEATING & AIR CONDITIONING/PLUMBING/COMPRESSOR - REMOVAL).

(2) Remove the four bolts that secure the compressor mounting bracket to the engine (Fig. 6).

(3) Remove the compressor mounting bracket from the engine.

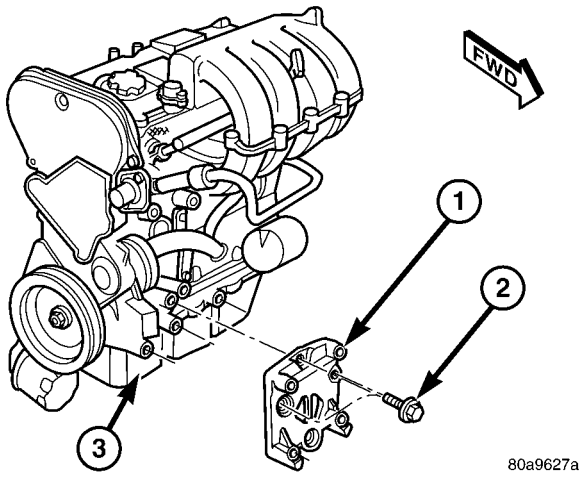

Fig. 6 Compressor Mounting Bracket - 2.4L Engine

1 - MOUNTING BRACKET
2 - BOLTS (4)
3 - ENGINE

INSTALLATION

A/C COMPRESSOR

NOTE: If a replacement A/C compressor is being installed, be certain to check the refrigerant oil level (Refer to 24 - HEATING & AIR CONDITIONING/ PLUMBING - FRONT/REFRIGERANT OIL - STANDARD PROCEDURE - REFRIGERANT OIL LEVEL). Use only refrigerant oil of the type recommended for the A/C compressor in the vehicle.

NOTE: The receiver/drier should always be replaced when the A/C compressor is replaced. This help will remove any contaminants including moisture from the refrigerant system.

(1) Position the A/C compressor into the engine compartment.

(2) On models with the 2.4L, 2.5L and 2.8L engine, loosely install the four bolts that secure the A/C compressor to the mounting bracket on the engine (2.4L), or the cylinder block (2.5L/2.8L). Tighten the bolts to 28 N·m (21 ft. lbs.).

(3) On models with the 3.3L and 3.8L engines, loosely install the two bolts and the two nuts that secure the A/C compressor to the engine and engage the retainer on the engine wire harness compressor clutch coil take out to the bracket on the top of the A/C compressor. Tighten each of the fasteners using the following sequence to 54 N·m (40 ft. lbs.).

- The upper nut at the front of the compressor.
- The lower nut at the front of the compressor.

A/C COMPRESSOR (Continued)

- The upper bolt at the rear of the compressor.
- The lower bolt at the rear of the compressor.

(4) Connect the wire harness connector to the compressor clutch coil wire connector.

(5) Install the accessory drive belt (Refer to 7 - COOLING/ACCESSORY DRIVE/DRIVE BELTS - INSTALLATION).

(6) Lower the vehicle.

(7) Remove the tape or plugs from the suction and discharge line fittings and the compressor ports.

(8) Lubricate new rubber O-ring seals with clean refrigerant oil and install them and a new gasket onto the suction and discharge line fittings.

(9) Connect the A/C suction line and the A/C discharge line to the A/C compressor.

(10) Install the nut that secures the A/C suction line and the A/C discharge line to the A/C compressor. Tighten the nuts to 23 N·m (17 ft. lbs.).

(11) Reconnect the negative battery cable.

(12) Evacuate the refrigerant system (Refer to 24 - HEATING & AIR CONDITIONING/PLUMBING - FRONT/REFRIGERANT - STANDARD PROCEDURE - REFRIGERANT SYSTEM EVACUATE).

(13) Charge the refrigerant system (Refer to 24 - HEATING & AIR CONDITIONING/PLUMBING - FRONT/REFRIGERANT - STANDARD PROCEDURE - REFRIGERANT SYSTEM CHARGE).

A/C COMPRESSOR MOUNTING BRACKET - 2.4L ENGINE

(1) Position the compressor mounting bracket onto the engine.

(2) Install the four bolts that secure the compressor mounting bracket to the engine. Tighten the bolts to 54 N·m (40 ft. lbs.).

(3) Reinstall the A/C compressor onto the mounting bracket (Refer to 24 - HEATING & AIR CONDITIONING/PLUMBING/COMPRESSOR - INSTALLATION).

A/C CONDENSER

DESCRIPTION

The A/C condenser is located in the front of the engine compartment behind the front fascia. The A/C condenser is a heat exchanger that allows the high-pressure refrigerant gas being discharged by the A/C compressor to give up its heat to the air passing over the condenser fins, which causes the refrigerant to cool and change to a liquid state.

The A/C condenser may be removed for service without removing the radiator and cooling fan from the vehicle.

The A/C condenser for vehicles equipped with the 2.4L/3.3L/3.8L engines are equipped with an integral automatic transmission cooler and mounting provisions.

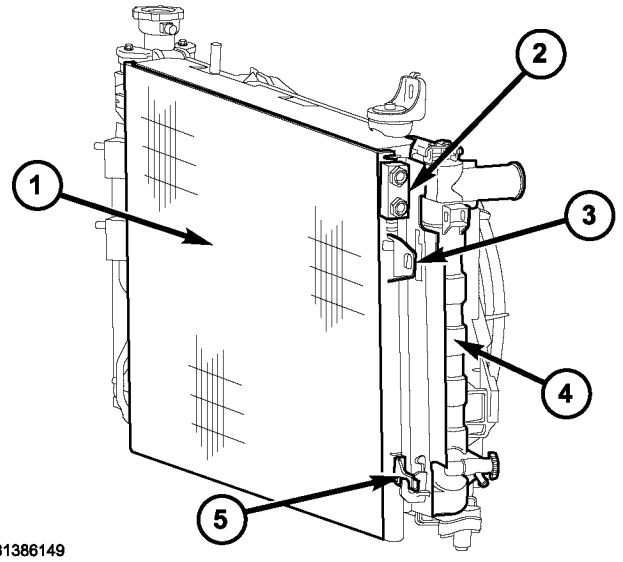

Fig. 7 A/C Condenser – 2.4L/3.3L/3.8L Engines

1 - A/C CONDENSER
2 - AUTO TRANS COOLER TAPPING BLOCK
3 - UPPER CONDENSER MOUNTING BRACKET (2)
4 - RADIATOR
5 - LOWER CONDENSER MOUNTING BRACKET (2)

OPERATION

When air passes through the fins of the A/C condenser, the high-pressure refrigerant gas within the A/C condenser gives up its heat. The refrigerant then condenses as it leaves the A/C condenser and becomes a high-pressure liquid. The volume of air flowing over the condenser fins is critical to the proper cooling performance of the A/C system. Therefore, it is important that there are no objects placed in front of the radiator grille openings at the front of the vehicle or foreign material on the condenser fins that might obstruct proper air flow. Also, any factory-installed air seals or shrouds must be properly reinstalled following radiator or A/C condenser service.

The A/C condenser cannot be repaired and, if faulty or damaged, it must be replaced.

A/C CONDENSER (Continued)

REMOVAL

2.4L/3.3L/3.8L ENGINES

WARNING: REFER TO THE APPLICABLE WARNINGS AND CAUTIONS FOR THIS SYSTEM BEFORE PERFORMING THE FOLLOWING OPERATION (Refer to 24 - HEATING & AIR CONDITIONING/PLUMBING - FRONT - WARNING - A/C PLUMBING) and (Refer to 24 - HEATING & AIR CONDITIONING/PLUMBING - FRONT - CAUTION - A/C PLUMBING).

NOTE: Before removing the A/C condenser, note the location of each of the radiator and condenser air seals. These air seals are used to direct air through the A/C condenser and radiator. The air seals must be reinstalled in their proper locations in order for the A/C and engine cooling systems to perform as designed.

(1) Recover the refrigerant from the refrigerant system (Refer to 24 - HEATING & AIR CONDITIONING/PLUMBING - FRONT/REFRIGERANT - STANDARD PROCEDURE - REFRIGERANT SYSTEM RECOVERY).

(2) Remove the two large screws that secure the front fascia and the outboard ends of the radiator sight shield to the radiator closure panel crossmember (Fig. 8).

(3) Remove the five small screws that secure the front fascia grille inserts to the radiator sight shield.

(4) Remove the radiator sight shield from the radiator closure panel crossmember.

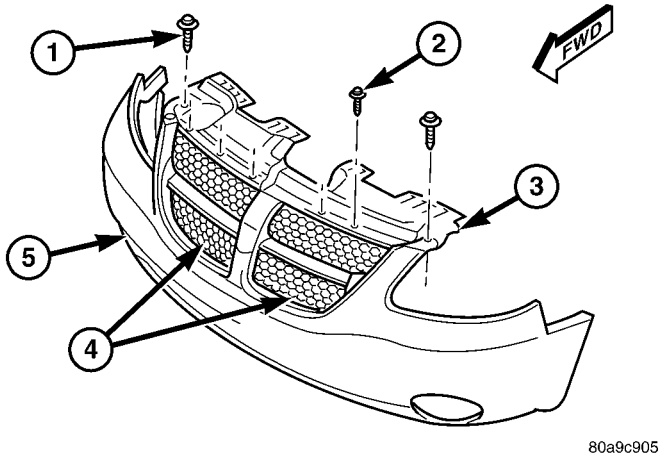

Fig. 8 Radiator Sight Shield – Typical

1 - LARGE SCREWS (2)
2 - SMALL SCREWS (5)
3 - RADIATOR SIGHT SHIELD
4 - GRILLE INSERTS
5 - FRONT FASCIA

(5) Remove the two bolts that secure the hood latch to the front of the radiator closure panel crossmember and move the latch out of the way over the top of the crossmember. Mark the location of latch for reinstallation.

(6) Disconnect the transmission oil cooler line quick-connect fittings located on the driver side of the A/C condenser from the transmission oil cooler (Refer to 7 - COOLING/TRANSMISSION - STANDARD PROCEDURE - TRANSMISSION COOLING).

(7) Disconnect the A/C discharge line and the A/C liquid line from the A/C condenser (Refer to 24 - HEATING & AIR CONDITIONING/PLUMBING/A/C DISCHARGE LINE - REMOVAL) and (Refer to 24 - HEATING & AIR CONDITIONING/PLUMBING/A/C LIQUID LINE - REMOVAL).

(8) Install plugs in, or tape over the opened refrigerant line fittings and the condenser ports.

(9) Disengage the retaining clips that secure the upper A/C condenser mounting brackets to the radiator.

(10) Lift the A/C condenser straight up to disengage the lower A/C condenser mounting brackets from the radiator.

(11) Carefully remove the A/C condenser from the engine compartment.

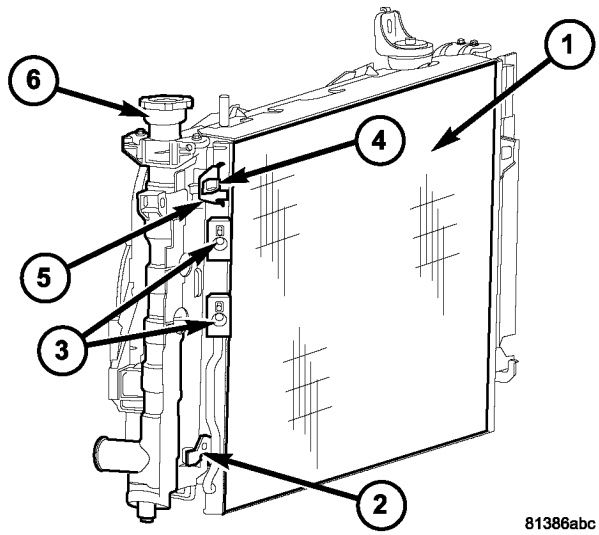

Fig. 9 A/C Condenser

1 - A/C CONDENSER
2 - LOWER CONDENSER MOUNTING BRACKET (2)
3 - REFRIGERANT LINE PORTS
4 - RETAINING CLIP (2)
5 - UPPER CONDENSER MOUNTING BRACKET (2)
6 - RADIATOR

A/C CONDENSER (Continued)

2.5L/2.8L DIESEL ENGINES

WARNING: REFER TO THE APPLICABLE WARNINGS AND CAUTIONS FOR THIS SYSTEM BEFORE PERFORMING THE FOLLOWING OPERATION (Refer to 24 - HEATING & AIR CONDITIONING/PLUMBING - FRONT - WARNING - A/C PLUMBING) and (Refer to 24 - HEATING & AIR CONDITIONING/PLUMBING - FRONT - CAUTION - A/C PLUMBING).

NOTE: Before removing the A/C condenser, note the location of each of the radiator and condenser air seals. These air seals are used to direct air through the A/C condenser and radiator. The air seals must be reinstalled in their proper locations in order for the A/C and engine cooling systems to perform as designed.

(1) Recover the refrigerant from the refrigerant system (Refer to 24 - HEATING & AIR CONDITIONING/PLUMBING - FRONT/REFRIGERANT - STANDARD PROCEDURE - REFRIGERANT SYSTEM RECOVERY).

(2) Remove the two large screws that secure the front fascia and the outboard ends of the radiator sight shield to the radiator closure panel crossmember (Fig. 8).

(3) Remove the five small screws that secure the front fascia grille inserts to the radiator sight shield.

(4) Remove the radiator sight shield from the radiator closure panel crossmember.

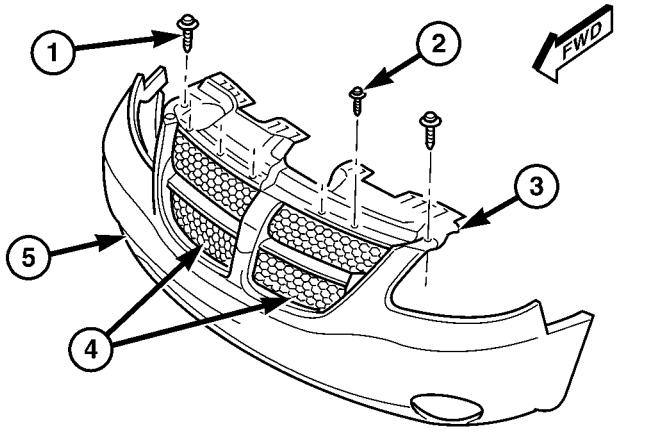

Fig. 10 Radiator Sight Shield – Typical

1 - LARGE SCREWS (2)
2 - SMALL SCREWS (5)
3 - RADIATOR SIGHT SHIELD
4 - GRILLE INSERTS
5 - FRONT FASCIA

(5) Remove the two bolts that secure the hood latch to the front of the radiator closure panel crossmember and move the latch out of the way over the top of the crossmember. Mark the location of latch for reinstallation.

(6) Disconnect the transmission oil cooler hoses from the left side of the cooling module (Refer to 7 - COOLING/TRANSMISSION/TRANS COOLER LINES - REMOVAL).

(7) Disconnect the A/C discharge line and the A/C liquid line from the A/C condenser (Refer to 24 - HEATING & AIR CONDITIONING/PLUMBING/A/C DISCHARGE LINE - REMOVAL) and (Refer to 24 - HEATING & AIR CONDITIONING/PLUMBING/A/C LIQUID LINE - REMOVAL).

(8) Install plugs in, or tape over the opened refrigerant line fittings and the condenser ports.

(9) Remove the two screws that secure the top of the mounting bracket on each side of the A/C condenser to the cooling module.

(10) Lift the A/C condenser, transmission oil cooler, and mounting brackets as an assembly far enough to disengage the lower mounting brackets from the rubber isolators located on each side of the cooling module.

(11) Remove the A/C condenser, transmission oil cooler, and mounting brackets from the vehicle as an assembly.

(12) Place the assembly on a workbench and remove the two screws that secure each mounting bracket to the A/C condenser.

(13) Remove the one screw that secures the left mounting bracket to the side of the transmission oil cooler.

(14) Remove the left mounting bracket from the side of the A/C condenser and transmission oil cooler.

(15) Remove the A/C condenser from the right mounting bracket and transmission oil cooler.

INSTALLATION

2.4L/3.3L/3.8L ENGINES

NOTE: If the A/C condenser is being replaced, add 50 milliliters (1.7 fluid ounce) of refrigerant oil to the refrigerant system. Use only refrigerant oil of the type recommended for the A/C compressor in the vehicle.

NOTE: Be certain that each of the radiator and condenser air seals are reinstalled in their proper locations. These air seals are required for proper A/C and engine cooling system operation.

A/C CONDENSER (Continued)

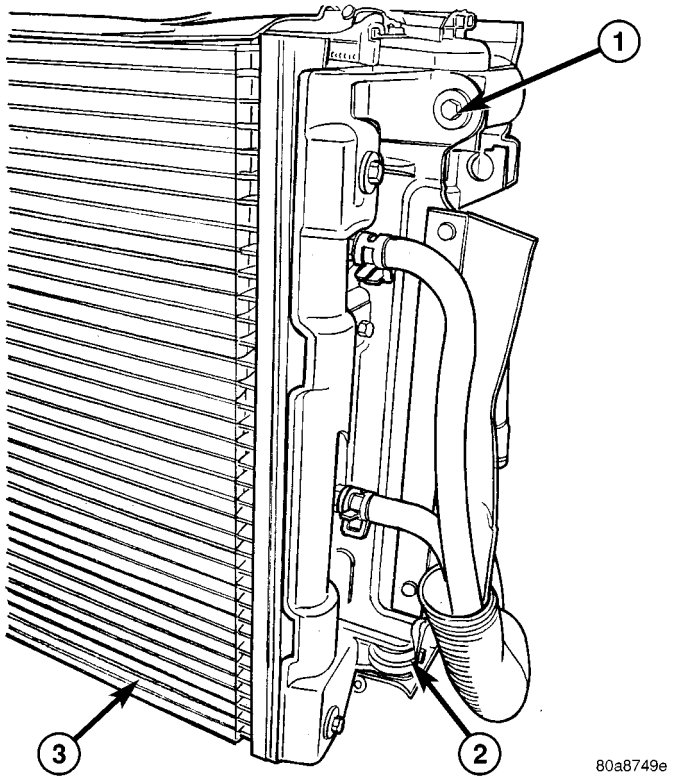

Fig. 11 A/C Condenser – 2.5L/2.8L Diesel Engines

1 - BOLT (2)
2 - LOWER MOUNT ISOLATOR (2)
3 - A/C CONDENSER

(1) Position the A/C condenser into the engine compartment.

(2) Carefully lower the A/C condenser straight down to engage the lower mounting brackets to the radiator.

(3) Engage the upper A/C condenser mounting brackets to the radiator. Be sure that the upper retaining clips are fully engaged to the upper mounting brackets.

(4) Remove the tape or plugs from the opened refrigerant line fittings and the condenser ports.

(5) Connect the A/C discharge line and the A/C liquid line to the A/C condenser (Refer to 24 - HEATING & AIR CONDITIONING/PLUMBING/A/C DISCHARGE LINE - INSTALLATION) and (Refer to 24 - HEATING & AIR CONDITIONING/PLUMBING/A/C LIQUID LINE - INSTALLATION).

(6) Connect the transmission oil cooler lines to the A/C Condenser. Be sure that the quick-connect fittings are fully engaged to the cooler tapping block (Refer to 7 - COOLING/TRANSMISSION - STANDARD PROCEDURE - TRANSMISSION COOLING).

(7) Position the hood latch onto the front of the radiator closure panel crossmember.

(8) Install the two screws that secure the hood latch to the crossmember. Check and adjust the hood latch as required. Tighten the bolts to 14 N·m (123 in. lbs.).

(9) Position the radiator sight shield onto the radiator closure panel crossmember.

(10) Install the five small screws that secure the front fascia grille inserts to the radiator sight shield. Tighten the screws to 2 N·m (17 in. lbs.).

(11) Install the two large screws that secure the front fascia and the outboard ends of the radiator sight shield to the radiator closure panel crossmember. Tighten the screws to 6 N·m (53 in. lbs.).

(12) Evacuate the refrigerant system (Refer to 24 - HEATING & AIR CONDITIONING/PLUMBING - FRONT/REFRIGERANT - STANDARD PROCEDURE - REFRIGERANT SYSTEM EVACUATE).

(13) Charge the refrigerant system (Refer to 24 - HEATING & AIR CONDITIONING/PLUMBING - FRONT/REFRIGERANT - STANDARD PROCEDURE - REFRIGERANT SYSTEM CHARGE).

2.5L/2.8L DIESEL ENGINES

NOTE: If the A/C condenser is being replaced, add 50 milliliters (1.7 fluid ounce) of refrigerant oil to the refrigerant system. Use only refrigerant oil of the type recommended for the A/C compressor in the vehicle.

NOTE: Be certain that each of the radiator and condenser air seals are reinstalled in their proper locations. These air seals are required for proper A/C and engine cooling system operation.

(1) Position the A/C condenser onto the right mounting bracket and transmission oil cooler unit.

(2) Position the left mounting bracket onto the side of the A/C condenser and transmission oil cooler.

(3) Install the screw that secures the left mounting bracket to the side of the transmission oil cooler. Tighten the screw to 5 N·m (45 in. lbs.).

(4) Install the two screws that secure each mounting bracket to the sides of the A/C condenser. Tighten the screws to 5 N·m (45 in. lbs.).

NOTE: Verify that the A/C condenser isolators are all installed and positioned correctly.

(5) Position the A/C condenser, transmission oil cooler, and mounting brackets into the vehicle as an assembly. Be certain that the lower mounting brackets are engaged into the rubber isolators located on each side of the cooling module.

(6) Install the two screws that secure the top of the mounting bracket on each side of the A/C condenser to the cooling module. Tighten the screws to 5 N·m (45 in. lbs.).

A/C CONDENSER (Continued)

(7) Remove the tape or plugs from the opened refrigerant line fittings and the condenser ports.

(8) Connect the A/C discharge line and the A/C liquid line to the A/C condenser (Refer to 24 - HEATING & AIR CONDITIONING/PLUMBING/A/C DISCHARGE LINE - INSTALLATION) and (Refer to 24 - HEATING & AIR CONDITIONING/PLUMBING/A/C LIQUID LINE - INSTALLATION).

(9) Reconnect the hoses to the transmission oil cooler fittings on the left side of the cooling module (Refer to 7 - COOLING/TRANSMISSION/TRANS COOLER LINES - INSTALLATION).

(10) Reposition the hood latch to the front of the radiator closure panel crossmember.

(11) Install the two screws that secure the hood latch to the front of the radiator closure panel crossmember. Check and adjust the hood latch as needed. Tighten the screws to 14 N·m (123 in. lbs.).

(12) Position the radiator sight shield onto the radiator closure panel crossmember.

(13) Install the five small screws that secure the front fascia grille inserts to the radiator sight shield. Tighten the screws to 2 N·m (17 in. lbs.).

(14) Install the two large screws that secure the front fascia and the outboard ends of the radiator sight shield to the radiator closure panel crossmember. Tighten the screws to 6 N·m (53 in. lbs.).

(15) Evacuate the refrigerant system (Refer to 24 - HEATING & AIR CONDITIONING/PLUMBING - FRONT/REFRIGERANT - STANDARD PROCEDURE - REFRIGERANT SYSTEM EVACUATE).

(16) Charge the refrigerant system (Refer to 24 - HEATING & AIR CONDITIONING/PLUMBING - FRONT/REFRIGERANT - STANDARD PROCEDURE - REFRIGERANT SYSTEM CHARGE).

A/C DISCHARGE LINE

REMOVAL

WARNING: REFER TO THE APPLICABLE WARNINGS AND CAUTIONS FOR THIS SYSTEM BEFORE PERFORMING THE FOLLOWING OPERATION (Refer to 24 - HEATING & AIR CONDITIONING/PLUMBING - FRONT - WARNING - A/C PLUMBING) and (Refer to 24 - HEATING & AIR CONDITIONING/PLUMBING - FRONT - CAUTION - A/C PLUMBING).

(1) Recover the refrigerant from the refrigerant system (Refer to 24 - HEATING & AIR CONDITIONING/PLUMBING - FRONT/REFRIGERANT - STANDARD PROCEDURE - REFRIGERANT SYSTEM RECOVERY).

(2) Remove the two large screws that secure the front fascia and the outboard ends of the radiator sight shield to the radiator closure panel crossmember (Fig. 12).

(3) Remove the five small screws that secure the front fascia grille inserts to the radiator sight shield.

(4) Remove the radiator sight shield from the radiator closure panel crossmember.

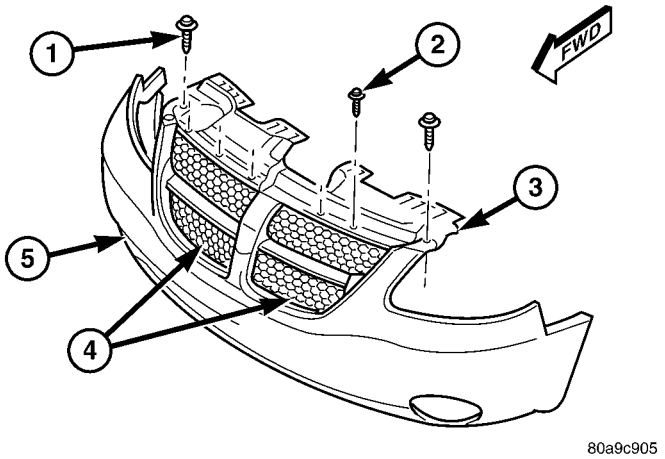

Fig. 12 Radiator Sight Shield - Typical

1 - LARGE SCREWS (2)
2 - SMALL SCREWS (5)
3 - RADIATOR SIGHT SHIELD
4 - GRILLE INSERTS
5 - FRONT FASCIA

(5) Remove the nut that secures the A/C discharge line to the right side of the A/C condenser (Fig. 13).

(6) Disconnect the A/C discharge line from the A/C condenser and remove and discard the O-ring seal and gasket.

(7) Install plugs in, or tape over the opened discharge line fitting and the condenser inlet port.

(8) Remove the nut that secures the A/C discharge line to the A/C compressor (Fig. 14).

(9) Disconnect the A/C discharge line from the A/C compressor and remove and discard the O-ring seal and gasket.

(10) Install plugs in, or tape over the opened discharge line fitting and the compressor discharge port.

(11) Remove the A/C discharge line from the engine compartment.

A/C DISCHARGE LINE (Continued)

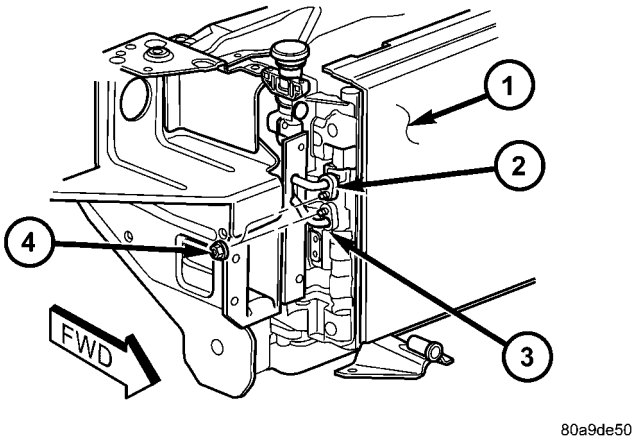

Fig. 13 A/C Discharge Line to A/C Condenser - Typical

1 - A/C CONDENSER
2 - A/C DISCHARGE LINE
3 - A/C LIQUID LINE
4 - NUT (2)

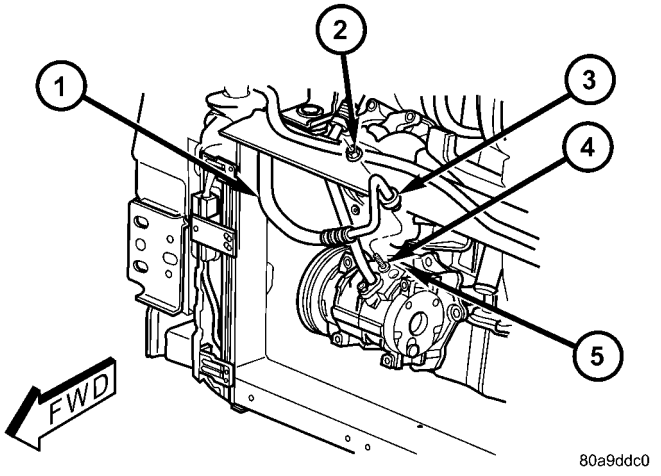

Fig. 14 A/C Discharge Line to Compressor - Typical

1 - DISCHARGE LINE
2 - NUT
3 - DISCHARGE LINE FITTING
4 - STUD
5 - DISCHARGE PORT

INSTALLATION

(1) Position the A/C discharge line into the engine compartment.

(2) Remove the tape or plugs from the compressor discharge port and the discharge line fitting.

(3) Lubricate a new rubber O-ring seal with clean refrigerant oil and install it and a new gasket onto the discharge line fitting.

(4) Install the A/C discharge line to the A/C compressor.

(5) Install the nut that secures the A/C discharge line to the A/C compressor. Tighten the nut to 23 N·m (17 ft. lbs.).

(6) Remove the tape or plugs from the condenser inlet port and the discharge line fitting.

(7) Lubricate a new rubber O-ring seal with clean refrigerant oil and install it and a new gasket onto the discharge line fitting.

(8) Install the A/C discharge line to the A/C condenser.

(9) Install the nut that secures the A/C discharge line to the A/C condenser. Tighten the nut to 23 N·m (17 ft. lbs.).

(10) Position the radiator sight shield onto the radiator closure panel crossmember.

(11) Install the five small screws that secure the front fascia grille inserts to the radiator sight shield. Tighten the screws to 2 N·m (17 in. lbs.).

(12) Install the two large screws that secure the front fascia and the outboard ends of the radiator sight shield to the radiator closure panel crossmember. Tighten the screws to 6 N·m (53 in. lbs.).

(13) Evacuate the refrigerant system (Refer to 24 - HEATING & AIR CONDITIONING/PLUMBING - FRONT/REFRIGERANT - STANDARD PROCEDURE - REFRIGERANT SYSTEM EVACUATE).

(14) Charge the refrigerant system (Refer to 24 - HEATING & AIR CONDITIONING/PLUMBING - FRONT/REFRIGERANT - STANDARD PROCEDURE - REFRIGERANT SYSTEM CHARGE).

A/C EVAPORATOR

DESCRIPTION

The A/C evaporator is located in the HVAC housing, behind the instrument panel. The evaporator is positioned in the housing so that all air that enters the housing must pass over the fins of the evaporator coils before it is distributed through the system ducts and outlets. However, air passing over the evaporator fins will only be conditioned when the compressor is engaged and circulating refrigerant through the evaporator tubes.

OPERATION

Refrigerant enters the A/C evaporator from the expansion valve as a low-temperature, low-pressure liquid. As air flows over the fins of the evaporator, the humidity in the air condenses on the fins, and the heat from the air is absorbed by the refrigerant. Heat absorption causes the refrigerant to boil and vaporize. The refrigerant becomes a low-pressure gas when it leaves the evaporator.

The A/C evaporator cannot be repaired and, if faulty or damaged, it must be replaced.

A/C EVAPORATOR (Continued)

REMOVAL

WARNING: ON VEHICLES EQUIPPED WITH AIRBAGS, DISABLE THE AIRBAG SYSTEM BEFORE ATTEMPTING ANY STEERING WHEEL, STEERING COLUMN, OR INSTRUMENT PANEL COMPONENT DIAGNOSIS OR SERVICE. DISCONNECT AND ISOLATE THE BATTERY NEGATIVE (GROUND) CABLE, THEN WAIT TWO MINUTES FOR THE AIRBAG SYSTEM CAPACITOR TO DISCHARGE BEFORE PERFORMING FURTHER DIAGNOSIS OR SERVICE. THIS IS THE ONLY SURE WAY TO DISABLE THE AIRBAG SYSTEM. FAILURE TO TAKE THE PROPER PRECAUTIONS COULD RESULT IN ACCIDENTAL AIRBAG DEPLOYMENT AND POSSIBLE PERSONAL INJURY.

(1) Remove the HVAC housing (Refer to 24 - HEATING & AIR CONDITIONING/DISTRIBUTION/HVAC HOUSING - REMOVAL).

(2) Disassemble the HVAC housing to access the evaporator (Refer to 24 - HEATING & AIR CONDITIONING/DISTRIBUTION/HVAC HOUSING - DISASSEMBLY).

(3) Carefully lift the evaporator and its foam wrap out of the lower half of the HVAC housing as a unit (Fig. 15). Be certain not to lose the clam shell type rubber seal that is fitted to the evaporator inlet and outlet tubes where they exit the HVAC housing.

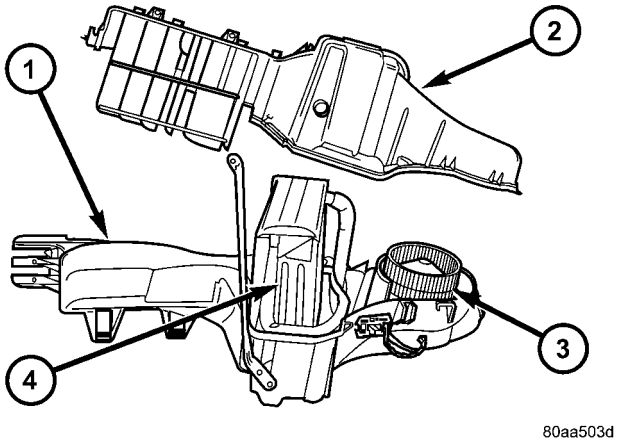

Fig. 15 HVAC Housing - LHD Shown, RHD Typical

1 - LOWER HVAC HOUSING
2 - UPPER HVAC HOUSING
3 - BLOWER MOTOR AND WHEEL
4 - A/C EVAPORATOR

INSTALLATION

NOTE: If the evaporator is being replaced, add 50 milliliters (1.7 fluid ounces) of refrigerant oil to the refrigerant system. Use only refrigerant oil of the type recommended for the A/C compressor in the vehicle.

(1) Carefully lower the evaporator and its foam wrap into the lower half of the HVAC housing as a unit. Be certain that the clam shell type rubber seal is fitted to the evaporator inlet and outlet tubes where they exit the HVAC housing.

(2) Assemble the HVAC housing (Refer to 24 - HEATING & AIR CONDITIONING/DISTRIBUTION/HVAC HOUSING - ASSEMBLY).

(3) Install the HVAC housing (Refer to 24 - HEATING & AIR CONDITIONING/DISTRIBUTION/HVAC HOUSING - INSTALLATION).

EXPANSION VALVE

DESCRIPTION

The front “H” valve-type thermal expansion valve (TXV) is located at the dash panel between the liquid and suction lines, and the A/C evaporator. The assembly consists of an aluminum H-valve body and a thermal sensor. On RG models, the evaporator temperature sensor is installed on the top of the expansion valve.

OPERATION

High-pressure, low temperature liquid refrigerant from the liquid line passes through the expansion valve orifice, converting it into a low-pressure, low-temperature mixture of liquid and gas before it enters the evaporator coil. A mechanical sensor in the expansion valve control head monitors the temperature and pressure of the refrigerant leaving the evaporator coil through the suction line, and adjusts the orifice size at the liquid line to let the proper amount of refrigerant into the evaporator coil to meet the vehicle cooling requirements. Controlling the refrigerant flow through the A/C evaporator ensures that none of the refrigerant leaving the evaporator is still in a liquid state, which could damage the compressor.

The A/C expansion valve is a factory calibrated unit and cannot be adjusted or repaired and, if faulty or damaged, it must be replaced.

EXPANSION VALVE (Continued)

DIAGNOSIS AND TESTING

FRONT A/C EXPANSION VALVE

WARNING: REFER TO THE APPLICABLE WARNINGS AND CAUTIONS FOR THIS SYSTEM BEFORE PERFORMING THE FOLLOWING OPERATION (Refer to 24 - HEATING & AIR CONDITIONING/PLUMBING - FRONT - WARNING - A/C PLUMBING) and (Refer to 24 - HEATING & AIR CONDITIONING/PLUMBING - FRONT - CAUTION - A/C PLUMBING).

NOTE: The A/C expansion valve should only be tested following testing of the A/C compressor.

NOTE: Liquid CO^2 is required to test the A/C expansion valve. This material is available from most welding supply facilities. Liquid CO^2 is also available from companies which service and sell fire extinguishers.

When testing the A/C expansion valve, the work area and the vehicle temperature must be 21° to 27° C (70° to 85° F). To test the expansion valve:

(1) Connect a charging station or manifold gauge set to the refrigerant system service ports. Verify the refrigerant charge level.

(2) Close all doors, windows and vents to the passenger compartment.

(3) Set the A/C-heater controls so that the A/C compressor is operating, the temperature control is in the highest temperature position, the mode door is directing the output to the floor outlets, and the blower motor is operating at the highest speed setting.

(4) Start the engine and allow it to idle. After the engine has reached normal operating temperature, allow the passenger compartment to heat up. This will create the need for maximum refrigerant flow into the A/C evaporator.

(5) If the refrigerant charge is sufficient, the discharge (high pressure) gauge should read 965 kPa to 1655 kPa (140 psi to 240 psi). The suction (low pressure) gauge should read 138 kPa to 207 kPa (20 psi to 30 psi). If OK, go to Step 6. If not OK, replace the faulty A/C expansion valve.

WARNING:
PROTECT THE SKIN AND EYES FROM EXPOSURE TO LIQUID CO^2 OR PERSONAL INJURY CAN RESULT.

(6) If the suction (low pressure) gauge reads within the specified range, freeze the A/C expansion valve for 30 seconds using liquid CO^2 or another suitable super-cold material.**Do not spray R-134a or R-12 refrigerant on the A/C expansion valve for this test.** The suction (low pressure) gauge reading should drop by 69 kPa (10 psi). If OK, go to Step 7 If not OK, replace the faulty A/C expansion valve.

(7) Allow the expansion valve control head to thaw. The suction (low pressure) gauge reading should stabilize at 138 kPa to 207 kPa (20 psi to 30 psi). If not OK, replace the faulty A/C expansion valve.

(8) When expansion valve testing is complete, test the overall A/C system performance (Refer to 24 - HEATING & AIR CONDITIONING - DIAGNOSIS AND TESTING - A/C PERFORMANCE TEST).

REMOVAL

WARNING: REFER TO THE APPLICABLE WARNINGS AND CAUTIONS FOR THIS SYSTEM BEFORE PERFORMING THE FOLLOWING OPERATION (Refer to 24 - HEATING & AIR CONDITIONING/PLUMBING - FRONT - WARNING - A/C PLUMBING) and (Refer to 24 - HEATING & AIR CONDITIONING/PLUMBING - FRONT - CAUTION - A/C PLUMBING).

(1) Recover the refrigerant from the refrigerant system (Refer to 24 - HEATING & AIR CONDITIONING/PLUMBING - FRONT/REFRIGERANT - STANDARD PROCEDURE - REFRIGERANT RECOVERY).

(2) Disconnect and isolate the battery negative cable.

(3) Remove the air cleaner housing from the right side of the engine compartment.

(4) Disconnect the drain tube from the wiper module drain on the right side of the engine compartment.

(5) Disconnect the wire harness connector from the A/C pressure transducer (Fig. 16).

(6) Remove the screw that secures the front liquid line rear section fitting to the top of the receiver/drier.

(7) Disconnect the liquid line fitting from the receiver/drier outlet port.

(8) Remove the seal from the liquid line fitting and discard.

(9) Install plugs in, or tape over the opened liquid line fitting and the receiver/drier outlet port.

(10) Remove the nut that secures the suction line and liquid line fittings to the stud on the A/C expansion valve.

(11) Disconnect the suction line and liquid line fittings from the A/C expansion valve and move the lines out of the way.

(12) Remove the seals from the suction line and liquid line fittings and discard.

EXPANSION VALVE (Continued)

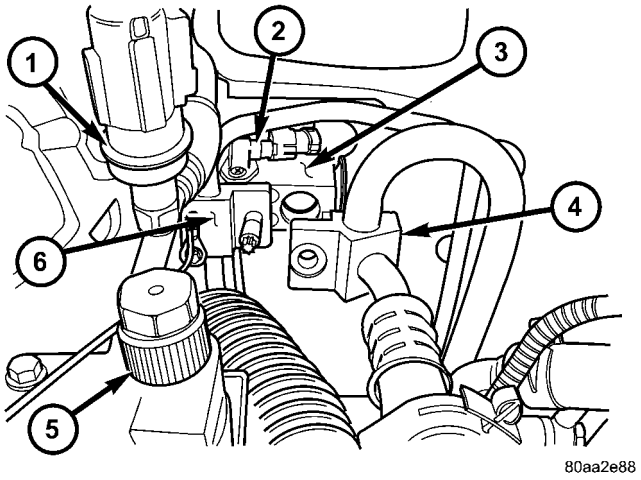

Fig. 16 A/C Expansion Valve - LHD Shown, RHD Typical

1 - A/C PRESSURE TRANSDUCER
2 - EVAPORATOR TEMPERATURE SENSOR (RG ONLY)
3 - A/C EXPANSION VALVE
4 - SUCTION LINE
5 - HIGH SIDE SERVICE PORT
6 - LIQUID LINE

(13) Install plugs in, or tape over the opened suction line and liquid line fittings and both expansion valve ports.

(14) Remove the two screws that secure the A/C expansion valve to the evaporator tube tapping plate.

(15) On RG models, disconnect the HVAC wire harness connector from the evaporator temperature sensor.

(16) Remove the A/C expansion valve from the evaporator inlet and outlet tube fittings.

(17) Remove the seals from the evaporator inlet and outlet tube fittings and discard.

(18) Install plugs in, or tape over the opened evaporator inlet and outlet tube fittings and both expansion valve ports.

(19) On RG models, remove the evaporator temperature sensor retainer and evaporator temperature sensor from the A/C expansion valve, if required.

INSTALLATION

NOTE: Any grease removed with the evaporator temperature sensor must be replaced. Failure to do so could result in poor A/C performance.

(1) On RG models, install the evaporator temperature sensor and retainer onto the A/C expansion valve, if removed.

(2) Remove the tape or plugs from the evaporator inlet and outlet tube fittings and both ports on the back of the A/C expansion valve.

(3) Lubricate new rubber O-ring seals with clean refrigerant oil and install them on the evaporator inlet and outlet tube fittings.

(4) Position the A/C expansion valve onto the evaporator inlet and outlet tube fittings.

(5) Install the two screws that secure the A/C expansion valve to the evaporator tube tapping plate plate. Tighten the screws to 11 N·m (97 in. lbs.).

(6) On RG models, connect the HVAC wire harness connector to the evaporator temperature sensor.

(7) Remove the tape or plugs from the front liquid line rear section and suction line fittings for the expansion valve and both ports on the front of the expansion valve.

(8) Lubricate new rubber O-ring seals with clean refrigerant oil and install them on the front liquid line rear section and suction line fittings for the expansion valve.

(9) Connect the liquid line and suction line fittings to the expansion valve.

(10) Install the nut that secures the suction line and liquid line fittings to the stud on the expansion valve. Tighten the nut to 23 N·m (17 ft. lbs.).

(11) Remove the tape or plugs from the liquid line rear section fitting and the receiver/drier outlet port.

(12) Lubricate a new rubber O-ring seal with clean refrigerant oil and install it on the liquid line fitting.

(13) Connect the liquid line fitting to the receiver/drier outlet port.

(14) Install the screw that secures the liquid line fitting to the receiver/drier. Tighten the screw to 11 N·m (97 in. lbs.).

(15) Connect the wire harness connector to the A/C pressure transducer.

(16) Connect the drain tube to the wiper module drain on the right side of the engine compartment.

(17) Install the air cleaner housing.

(18) Reconnect the battery negative cable.

(19) Evacuate the refrigerant system (Refer to 24 - HEATING & AIR CONDITIONING/PLUMBING - FRONT/REFRIGERANT - STANDARD PROCEDURE - REFRIGERANT SYSTEM EVACUATE).

(20) Charge the refrigerant system (Refer to 24 - HEATING & AIR CONDITIONING/PLUMBING - FRONT/REFRIGERANT - STANDARD PROCEDURE - REFRIGERANT SYSTEM CHARGE).

HEATER CORE

DESCRIPTION

The heater core is located in the distribution housing, which is attached to the HVAC housing, behind the instrument panel. It is a heat exchanger made of rows of tubes and fins. One end of the core is fitted with a molded plastic tank, which includes integral

HEATER CORE (Continued)

heater core inlet and outlet ports. Removable heater core tubes attach to the ports by use of a sealing plate secured with a screw to the heater core tank. This removable heater core tube arrangement allows the heater core to be serviced without removing the HVAC housing from the vehicle.

OPERATION

Engine coolant is circulated through heater hoses to the heater core at all times. As the coolant flows through the heater core, heat removed from the engine is transferred to the heater core fins and tubes. Air directed through the heater core picks up the heat from the heater core fins. The blend door allows control of the heater output air temperature by regulating the amount of air that is flowing through the heater core within the HVAC housing.

The heater core cannot be repaired and, if faulty or damaged, it must be replaced.

REMOVAL

FRONT HEATER CORE TUBES

WARNING: ON VEHICLES EQUIPPED WITH AIRBAGS, DISABLE THE AIRBAG SYSTEM BEFORE ATTEMPTING ANY STEERING WHEEL, STEERING COLUMN, OR INSTRUMENT PANEL COMPONENT DIAGNOSIS OR SERVICE. DISCONNECT AND ISOLATE THE BATTERY NEGATIVE (GROUND) CABLE, THEN WAIT TWO MINUTES FOR THE AIRBAG SYSTEM CAPACITOR TO DISCHARGE BEFORE PERFORMING FURTHER DIAGNOSIS OR SERVICE. THIS IS THE ONLY SURE WAY TO DISABLE THE AIRBAG SYSTEM. FAILURE TO TAKE THE PROPER PRECAUTIONS COULD RESULT IN ACCIDENTAL AIRBAG DEPLOYMENT AND POSSIBLE PERSONAL INJURY.

(1) Drain the engine cooling system (Refer to 7 - COOLING - STANDARD PROCEDURE - COOLING SYSTEM DRAIN).

(2) Disconnect and isolate the battery negative cable.

(3) Disconnect the heater hoses from the heater core tubes (Refer to 24 - HEATING & AIR CONDITIONING/PLUMBING/HEATER INLET HOSE - REMOVAL) and (Refer to 24 - HEATING & AIR CONDITIONING/PLUMBING/HEATER RETURN HOSE - REMOVAL).

(4) Remove the silencer from beneath the driver side end of the instrument panel.

NOTE: Take the proper precautions to protect the carpeting below the heater core from spilled engine coolant and have absorbent toweling readily available to clean up any spills.

(5) Remove the screw that secures the heater core tube sealing plate to the heater core supply and return ports (Fig. 17).

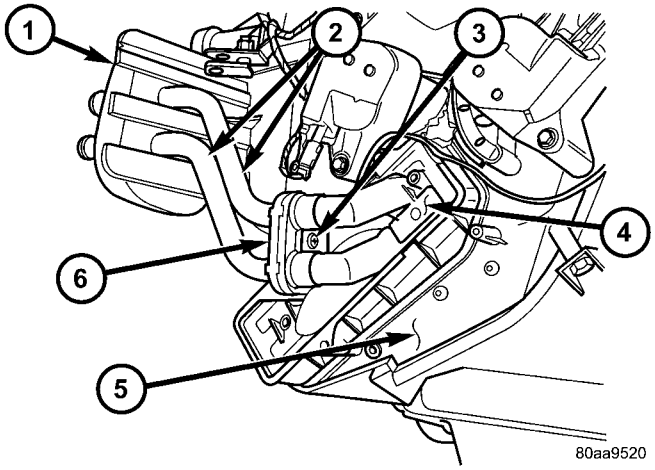

Fig. 17 Heater Core Tubes - LHD Shown, RHD Typical

1 - SEAL
2 - HEATER CORE TUBES
3 - SCREW
4 - HEATER CORE
5 - DISTRIBUTION HOUSING
6 - SEALING PLATE

(6) Push both heater core tubes simultaneously toward the dash panel far enough to disengage their fittings from the heater core supply and return ports.

(7) Install plugs in, or tape over the opened heater core tube fittings and both heater core ports.

(8) Pull both heater core tubes simultaneously slightly away from the distribution housing and rearward far enough to disengage the engine compartment ends of the tubes from the dash panel seal.

(9) Remove the heater core tubes and sealing plate as a unit from beneath the instrument panel.

(10) Use absorbent toweling to clean up any engine coolant spills from the preceding operation.

HEATER CORE (Continued)

FRONT HEATER CORE

WARNING: ON VEHICLES EQUIPPED WITH AIRBAGS, DISABLE THE AIRBAG SYSTEM BEFORE ATTEMPTING ANY STEERING WHEEL, STEERING COLUMN, OR INSTRUMENT PANEL COMPONENT DIAGNOSIS OR SERVICE. DISCONNECT AND ISOLATE THE BATTERY NEGATIVE (GROUND) CABLE, THEN WAIT TWO MINUTES FOR THE AIRBAG SYSTEM CAPACITOR TO DISCHARGE BEFORE PERFORMING FURTHER DIAGNOSIS OR SERVICE. THIS IS THE ONLY SURE WAY TO DISABLE THE AIRBAG SYSTEM. FAILURE TO TAKE THE PROPER PRECAUTIONS COULD RESULT IN ACCIDENTAL AIRBAG DEPLOYMENT AND POSSIBLE PERSONAL INJURY.

(1) Remove the silencer boot fasteners located around the base of the lower steering shaft from the dash panel so that it may be pushed aside.

(2) Remove the brake lamp switch from its mounting bracket (Refer to 8 - ELECTRICAL/LAMPS/LIGHTING - EXTERIOR/BRAKE LAMP SWITCH - REMOVAL).

(3) Disconnect the power brake booster input rod (push rod) from the pin on the brake pedal arm (Refer to 5 - BRAKES - ABS/HYDRAULIC/MECHANICAL/POWER BRAKE BOOSTER - REMOVAL).

(4) Remove the heater core tubes (Refer to 24 - HEATING & AIR CONDITIONING/PLUMBING/HEATER CORE - REMOVAL).

(5) Remove the two screws that secure the heater core mounting plate to the distribution housing.

(6) While pulling the accelerator pedal upward (Fig. 18) and pushing the brake pedal downward (Fig. 19) far enough for clearance, pull the heater core out of the distribution housing.

(7) Use absorbent toweling to mop up any engine coolant spills from the preceding operation. Also, if the heater core was leaking, use absorbent toweling and reach into the heater core opening to mop up any residual engine coolant within the distribution housing.

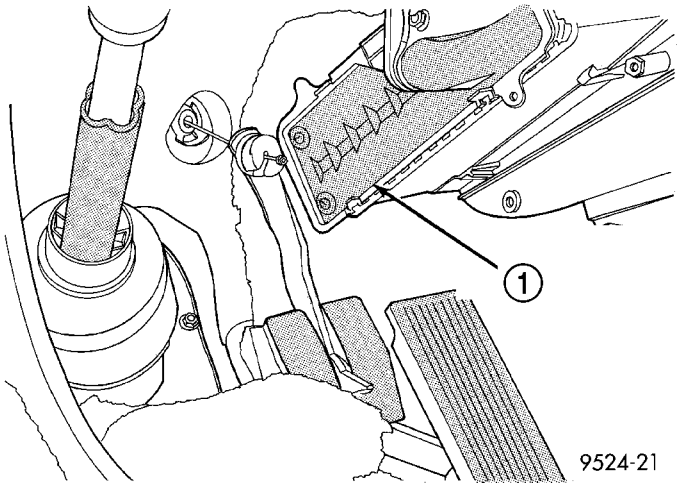

Fig. 18 Accelerator Pedal - LHD Shown, RHD Typical

1 - HEATER CORE

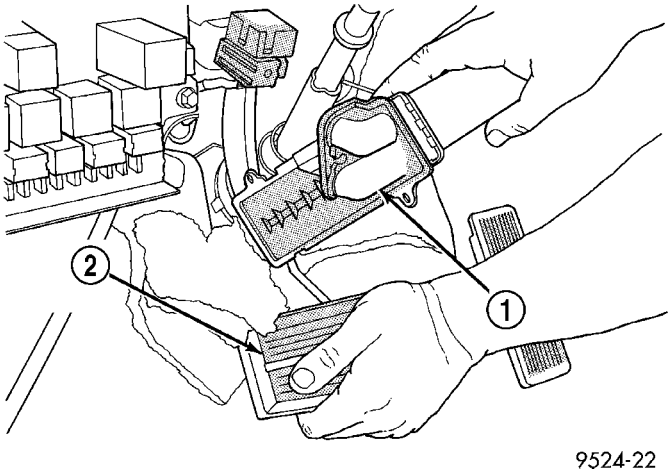

Fig. 19 Brake Pedal - LHD Shown, RHD Typical

1 - HEATER CORE
2 - BRAKE PEDAL

INSTALLATION

FRONT HEATER CORE TUBES

(1) Remove the plugs or tape from both heater core tube fittings and both heater core ports.

(2) Position the heater core tubes and sealing plate as a unit beneath the instrument panel.

HEATER CORE (Continued)

(3) Align the engine compartment ends of both heater core tubes with the openings in the dash panel seal and push them simultaneously forward through the seal far enough to engage the heater core ends of the tubes with the heater core supply and return ports.

(4) Position both heater core tubes and the sealing plate simultaneously to the heater core supply and return ports.

NOTE: The heater core tubes each have a slot that must be indexed to a location tab within each of the heater core ports. Adjust the position of the tubes as required so that the sealing plate fits flush against the heater core supply and return ports, which indicates that the tubes are properly indexed.

(5) Index both heater core tubes to the heater core ports.

(6) Install the screw that secures the heater core tube sealing plate to the heater core supply and return ports. Tighten the screw to 3 N·m (27 in. lbs.).

(7) Install the silencer under the driver side end of the instrument panel.

(8) Connect the heater hoses to the heater hose tubes (Refer to 24 - HEATING & AIR CONDITIONING/PLUMBING/HEATER INLET HOSE - INSTALLATION) and(Refer to 24 - HEATING & AIR CONDITIONING/PLUMBING/HEATER RETURN HOSE - INSTALLATION).

(9) Reconnect the battery negative cable.

(10) Refill the engine cooling system (Refer to 7 - COOLING - STANDARD PROCEDURE - COOLING SYSTEM REFILL).

FRONT HEATER CORE

(1) While pushing the brake pedal downward and pulling the accelerator pedal upward far enough for clearance, slide the heater core into the distribution housing.

(2) Install the two screws that secure the heater core mounting plate to the distribution housing. Tighten the screws to 2 N·m (17 in. lbs.).

(3) Install the heater core tubes (Refer to 24 - HEATING & AIR CONDITIONING/PLUMBING/HEATER CORE - INSTALLATION).

(4) Reconnect the power brake booster input rod (push rod) to the pin on the brake pedal arm (Refer to 5 - BRAKES/HYDRAULIC/MECHANICAL/POWER BRAKE BOOSTER - INSTALLATION).

(5) Reinstall the brake lamp switch into its mounting bracket (Refer to 8 - ELECTRICAL/LAMPS/LIGHTING - EXTERIOR/BRAKE LAMP SWITCH - INSTALLATION).

(6) Reinstall the silencer boot around the base of the lower steering shaft on the dash panel.

(7) Reconnect the battery negative cable.

(8) Refill the engine cooling system (Refer to 7 - COOLING - STANDARD PROCEDURE - COOLING SYSTEM REFILL).

(9) Operate system for two thermostat cycles to assure the elimination of any air that may be trapped within the cooling system.

HEATER INLET HOSE

REMOVAL

WARNING: REFER TO THE APPLICABLE WARNINGS AND CAUTIONS FOR THIS SYSTEM BEFORE PERFORMING THE FOLLOWING OPERATION (Refer to 24 - HEATING & AIR CONDITIONING/PLUMBING - WARNING).

NOTE: The heater inlet hose is constructed from formed steel tubing and rubber hoses. Depending on application, the ends are secured to the heater core, engine oil cooler or the engine by spring tension clamps.

(1) Drain the engine cooling system (Refer to 7 - COOLING - STANDARD PROCEDURE - COOLING SYSTEM DRAIN).

HEATER INLET HOSE (Continued)

(2) Using spring tension clamp pliers, compress and slide the clamps off of each end of the hose being removed (Fig. 20), (Fig. 21) or (Fig. 22).

CAUTION:
DO NOT apply excessive pressure on heater tubes or connections when removing heater hoses. Excessive pressure may damage or deform the tubes/heater core, causing an engine coolant leak.

(3) Disconnect each hose end by carefully twisting the hose back and forth on the tube or nipple, while gently pulling it away from the end of the tube or nipple.

NOTE:
Replacement of the heater inlet hoses will be required if the hose ends are cut for removal.

(4) If necessary, carefully cut the hose end and peel the hose off of the tube or nipple.

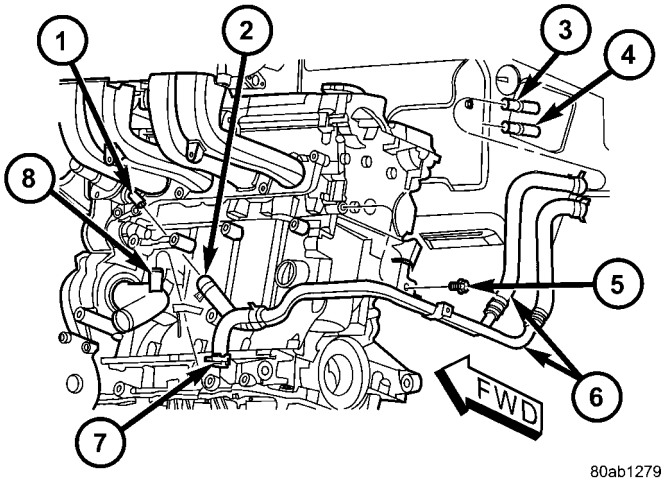

Fig. 20 Heater Inlet Hose - 2.4L Shown, 2.5L Typical

1 - ENGINE OUTLET NIPPLE
2 - HEATER INLET HOSE
3 - HEATER CORE OUTLET
4 - HEATER CORE INLET
5 - SCREW
6 - HEATER TUBE
7 - HEATER RETURN HOSE
8 - ENGINE INLET NIPPLE

INSTALLATION

WARNING: REFER TO THE APPLICABLE WARNINGS AND CAUTIONS FOR THIS SYSTEM BEFORE PERFORMING THE FOLLOWING OPERATION (Refer to 24 - HEATING & AIR CONDITIONING/PLUMBING - WARNING).

(1) Using spring tension clamp pliers, compress and slide each clamp away from the end of the hose being installed.

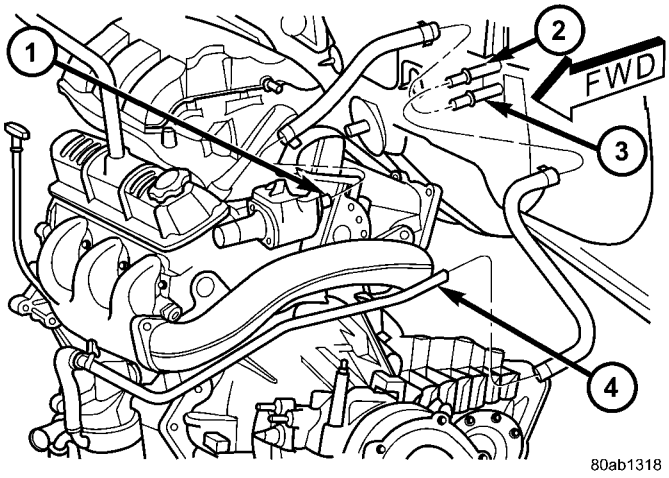

Fig. 21 Heater Inlet Hose - 3.3L/3.8L W/O Rear Heater

1 - ENGINE OUTLET NIPPLE
2 - HEATER CORE OUTLET
3 - HEATER CORE INLET
4 - HEATER RETURN TUBE (TYPICAL)

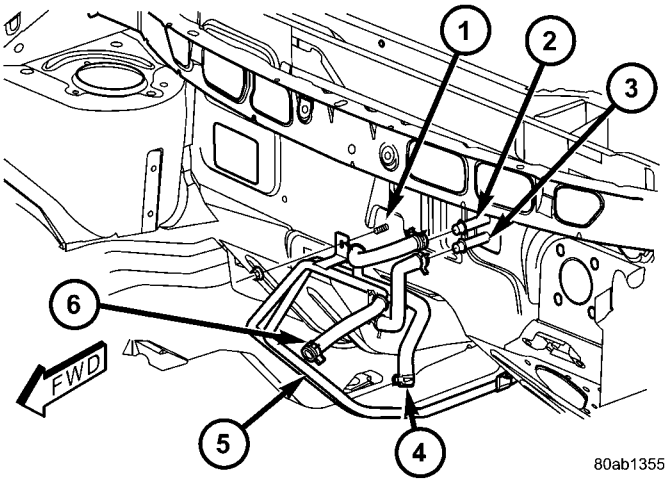

Fig. 22 Heater Inlet Hose - 3.3L/3.8L With Rear Heater

1 - STUD
2 - HEATER CORE OUTLET
3 - HEATER CORE INLET
4 - TO ENGINE OUTLET NIPPLE
5 - TO UNDERBODY PLUMBING
6 - TO HEATER RETURN TUBE & HOSE

(2) Install each hose by carefully twisting the hose back and forth while gently pushing it onto the tube or nipple end.

(3) Using spring tension clamp pliers, compress and slide the clamps onto each end of the hose being installed.

(4) Refill the engine cooling system (Refer to 7 - COOLING - STANDARD PROCEDURE - COOLING SYSTEM REFILL).

HEATER RETURN HOSE

REMOVAL

WARNING: REFER TO THE APPLICABLE WARNINGS AND CAUTIONS FOR THIS SYSTEM BEFORE PERFORMING THE FOLLOWING OPERATION (Refer to 24 - HEATING & AIR CONDITIONING/PLUMBING - WARNING).

NOTE: The heater return tube is constructed from formed steel tubing and rubber hoses. Depending on application, the ends are secured to the heater core, engine oil cooler or the engine by spring tension clamps.

(1) Drain the engine cooling system (Refer to 7 - COOLING - STANDARD PROCEDURE - COOLING SYSTEM DRAIN).

(2) Using spring tension clamp pliers, compress and slide the clamps off of each end of the hose being removed (Fig. 23), (Fig. 24) or (Fig. 25).

CAUTION:
DO NOT apply excessive pressure on heater tubes or connections when removing heater hoses. Excessive pressure may damage or deform the tubes/heater core, causing an engine coolant leak.

(3) Disconnect each hose end by carefully twisting the hose back and forth on the tube or nipple, while gently pulling it away from the end of the tube or nipple.

NOTE:
Replacement of the heater return hoses will be required if the hose ends are cut for removal.

(4) If necessary, carefully cut the hose end and peel the hose off of the tube or nipple.

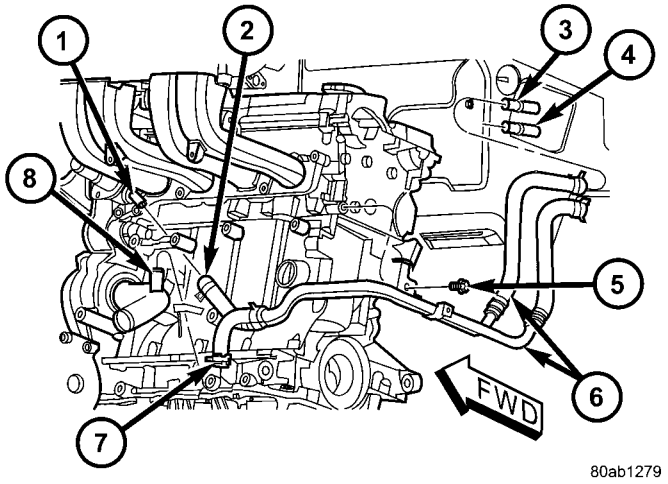

Fig. 23 Heater Return Hose - 2.4L Shown, 2.5L Typical

1 - ENGINE OUTLET NIPPLE
2 - HEATER INLET HOSE
3 - HEATER CORE OUTLET
4 - HEATER CORE INLET
5 - SCREW
6 - HEATER TUBE
7 - HEATER RETURN HOSE
8 - ENGINE INLET NIPPLE

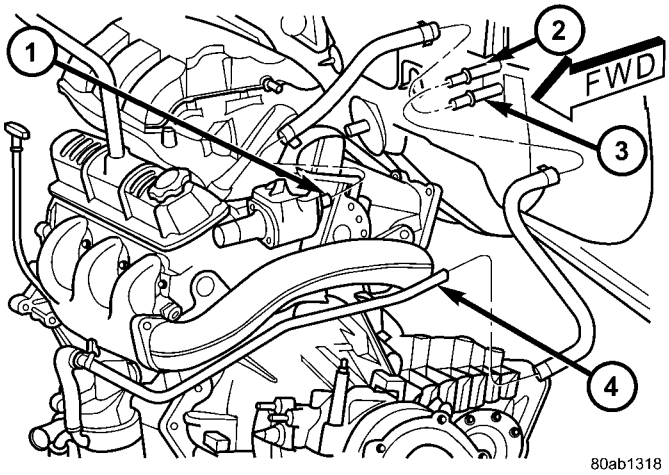

Fig. 24 Heater Return Hose - 3.3L/3.8L W/O Rear Heater

1 - ENGINE OUTLET NIPPLE
2 - HEATER CORE OUTLET
3 - HEATER CORE INLET
4 - HEATER RETURN TUBE (TYPICAL)

HEATER RETURN HOSE (Continued)

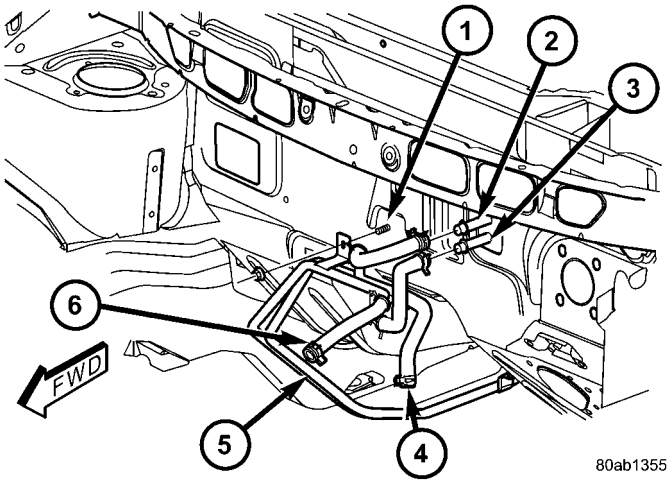

Fig. 25 HEATER HOSES - 3.3/3.8L With Rear Heater

1 - STUD
2 - HEATER CORE OUTLET
3 - HEATER CORE INLET
4 - TO ENGINE OUTLET NIPPLE
5 - TO UNDERBODY PLUMBING
6 - TO HEATER RETURN TUBE & HOSE

INSTALLATION

WARNING: REFER TO THE APPLICABLE WARNINGS AND CAUTIONS FOR THIS SYSTEM BEFORE PERFORMING THE FOLLOWING OPERATION (Refer to 24 - HEATING & AIR CONDITIONING/PLUMBING - WARNING).

(1) Using spring tension clamp pliers, compress and slide the clamp away from the end of the heater return hose.

(2) Install each hose end by carefully twisting the hose back and forth while gently pushing it onto the tube.

(3) Using spring tension clamp pliers, compress and slide the clamps onto each end of the heater return hose.

(4) Refill the engine cooling system (Refer to 7 - COOLING - STANDARD PROCEDURE).

LIQUID LINE

REMOVAL

WARNING: REFER TO THE APPLICABLE WARNINGS AND CAUTIONS FOR THIS SYSTEM BEFORE PERFORMING THE FOLLOWING OPERATION (Refer to 24 - HEATING & AIR CONDITIONING/PLUMBING - FRONT - WARNING - A/C PLUMBING) and (Refer to 24 - HEATING & AIR CONDITIONING/PLUMBING - FRONT - CAUTION - A/C PLUMBING).

NOTE: The front A/C liquid line is serviced in two sections. The front section connects between the A/C condenser and the receiver/drier and includes the high side service port. The rear section connects between the receiver/drier and the expansion valve and includes the fitting for the A/C pressure transducer. On models equipped with the optional rear heating-A/C system, the rear section of the front A/C liquid line also includes a hose and tube extension that connects the front liquid line to the liquid line for the rear A/C system.

FRONT SECTION

(1) Recover the refrigerant from the refrigerant system (Refer to 24 - HEATING & AIR CONDITIONING/PLUMBING - FRONT/REFRIGERANT - STANDARD PROCEDURE - REFRIGERANT SYSTEM RECOVERY).

(2) Disconnect and isolate the negative battery cable.

(3) Remove the air cleaner housing from the right side of the engine compartment.

(4) Remove the two large screws that secure the front fascia and the outboard ends of the radiator sight shield to the radiator closure panel crossmember (Fig. 26).

(5) Remove the five small screws that secure the front fascia grille inserts to the radiator sight shield.

(6) Remove the radiator sight shield from the radiator closure panel crossmember.

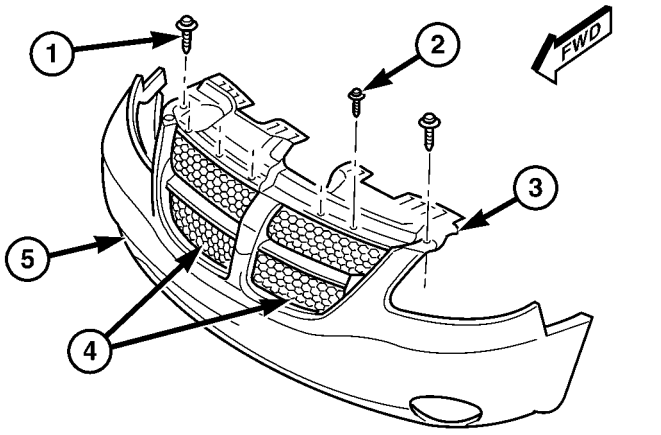

Fig. 26 Radiator Sight Shield - Typical

1 - LARGE SCREWS (2)
2 - SMALL SCREWS (5)
3 - RADIATOR SIGHT SHIELD
4 - GRILLE INSERTS
5 - FRONT FASCIA

(7) Remove the nut that secures the A/C liquid line to the right side of the A/C condenser (Fig. 27).

LIQUID LINE (Continued)

(8) Disconnect the A/C liquid line from the A/C condenser and remove and discard the O-ring seal and gasket.

(9) Install plugs in, or tape over the opened liquid line fitting and the condenser outlet port.

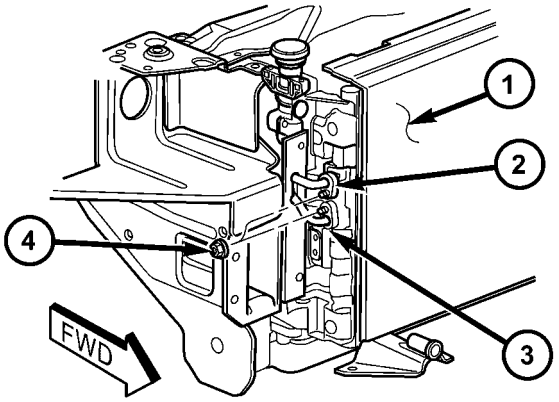

Fig. 27 A/C Condenser Connections

1 - A/C CONDENSER
2 - A/C DISCHARGE LINE
3 - A/C LIQUID LINE
4 - NUT (2)

(10) Disengage the retainer that secures the liquid line routing clip to the top of the right frame rail ahead of the front strut tower in the engine compartment (Fig. 28).

(11) Remove the bolt that secures the front section of the A/C liquid line to the receiver/drier.

(12) Disconnect the A/C liquid line from the receiver/drier and remove and discard the O-ring seal.

(13) Install plugs in, or tape over the opened liquid line fitting and the receiver/drier inlet port.

(14) Remove the front section of the A/C liquid line from the engine compartment.

REAR SECTION

(1) Recover the refrigerant from the refrigerant system (Refer to 24 - HEATING & AIR CONDITIONING/PLUMBING - FRONT/REFRIGERANT - STANDARD PROCEDURE - REFRIGERANT RECOVERY).

(2) Disconnect and isolate the negative battery cable.

(3) Remove the air cleaner housing from the right side of the engine compartment.

(4) Disconnect the drain tube from the wiper module drain on the right side of the engine compartment.

(5) Remove the A/C pressure transducer (Refer to 24 - HEATING & AIR CONDITIONING/CONTROLS - FRONT/A/C PRESSURE TRANSDUCER - REMOVAL).

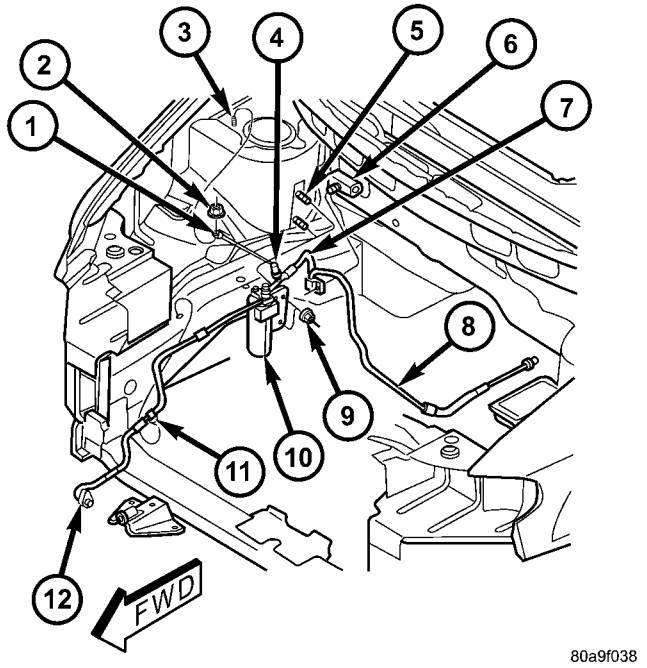

Fig. 28 A/C Liquid Line - LHD Shown, RHD Typical

1 - A/C GROUND STRAP (IF EQUIPPED)
2 - NUT (IF EQUIPPED)
3 - WELD STUD (IF EQUIPPED)
4 - A/C PRESSURE TRANSDUCER
5 - WELD STUD (2)
6 - A/C EXPANSION VALVE
7 - A/C LIQUID LINE (REAR SECTION)
8 - LIQUID LINE EXTENSION (REAR A/C ONLY)
9 - NUT (2)
10 - RECEIVER/DRIER
11 - ROUTING CLIP
12 - A/C LIQUID LINE (FRONT SECTION)

(6) If equipped, remove the nut that secures the A/C ground strap to the weld stud on the top of the right front strut tower (Fig. 28).

(7) If equipped, remove the A/C ground strap eyelet terminal connector from the weld stud.

(8) Remove the bolt that secures the rear section of the A/C liquid line to the receiver/drier.

(9) Disconnect the A/C liquid line from the receiver/drier and remove and discard the O-ring seal.

(10) Install plugs in, or tape over the opened liquid line fitting and the receiver/drier outlet port.

(11) Remove the nut that secures the A/C suction line and the A/C liquid line to the A/C expansion valve.

(12) Disconnect the A/C suction line and the A/C liquid line from the A/C expansion valve and remove and discard the O-ring seals.

(13) Install plugs in, or tape over the opened suction line and liquid line fittings and both expansion valve ports.

(14) On RHD models, remove the rear section of the A/C liquid line from the retaining bracket located at the top of the dash panel

LIQUID LINE (Continued)

(15) If the vehicle is equipped with the optional rear heating-A/C system, go to Step 16. If the vehicle is not equipped with the optional rear heating-A/C system, go to Step 22.

(16) Raise and support the vehicle.

(17) Cut the tie strap located just forward of the connections between the underbody plumbing and the engine compartment plumbing for the rear heating-A/C system (Fig. 29).

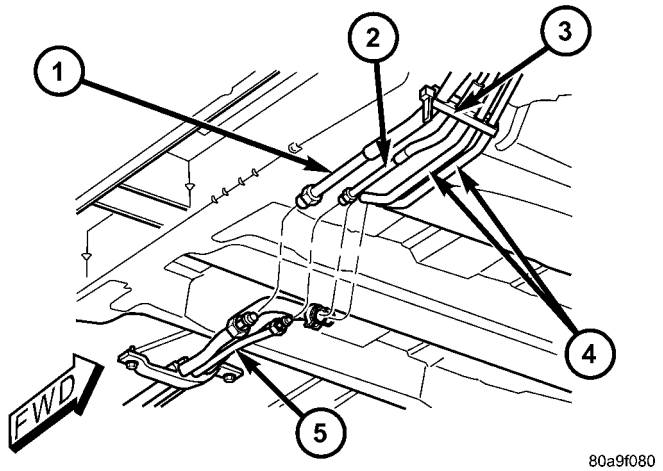

Fig. 29 Underbody A/C Line Connections

1 - SUCTION LINE EXTENSION TUBE
2 - LIQUID LINE EXTENSION TUBE
3 - RETAINING STRAP
4 - REAR HEATER EXTENSION TUBES
5 - UNDERBODY REFRIGERANT LINES

(18) Disconnect the A/C liquid line extension fitting from the underbody liquid line fitting for the rear A/C system.

(19) Remove the O-ring seal from the underbody liquid line fitting and discard.

(20) Install plugs in, or tape over the opened liquid line fittings.

(21) Lower the vehicle.

(22) Remove the rear section of the A/C liquid line from the engine compartment.

INSTALLATION

FRONT SECTION

(1) Position the front section of the A/C liquid line into the engine compartment.

(2) Remove the tape or plugs from the liquid line fitting and the receiver/drier inlet port.

(3) Lubricate a new rubber O-ring seal with clean refrigerant oil and install it onto the liquid line fitting.

(4) Connect the A/C liquid line to the receiver/drier.

(5) Install the bolt that secures the A/C liquid line to the receiver/drier. Tighten the bolt to 11 N·m (97 in. lbs.).

(6) Engage the retainer that secures the liquid line routing clip to the top of the right frame rail ahead of the front strut tower in the engine compartment.

(7) Remove the tape or plugs from the condenser outlet port and the liquid line fitting.

(8) Lubricate a new rubber O-ring seal with clean refrigerant oil and install it and a new gasket onto the liquid line fitting.

(9) Connect the A/C liquid line to the A/C condenser.

(10) Install the nut that secures the A/C liquid line to the A/C condenser. Tighten the nut to 23 N·m (17 ft. lbs.).

(11) Position the radiator sight shield onto the radiator closure panel crossmember.

(12) Install the five small screws that secure the front fascia grille inserts to the radiator sight shield. Tighten the screws to 2 N·m (17 in. lbs.).

(13) Install the two large screws that secure the front fascia and the outboard ends of the radiator sight shield to the radiator closure panel crossmember. Tighten the screws to 6 N·m (53 in. lbs.).

(14) Reinstall the air cleaner housing into the right side of the engine compartment.

(15) Reconnect the negative battery cable.

(16) Evacuate the refrigerant system (Refer to 24 - HEATING & AIR CONDITIONING/PLUMBING - FRONT/REFRIGERANT - STANDARD PROCEDURE - REFRIGERANT SYSTEM EVACUATE).

(17) Charge the refrigerant system (Refer to 24 - HEATING & AIR CONDITIONING/PLUMBING - FRONT/REFRIGERANT - STANDARD PROCEDURE - REFRIGERANT SYSTEM CHARGE).

REAR SECTION

(1) Position the rear section of the A/C liquid line into the engine compartment.

(2) Remove the tape or plugs from the suction line and liquid line fittings and both expansion valve ports.

(3) Lubricate new rubber O-ring seals with clean refrigerant oil and install them onto the suction line and liquid line fittings.

(4) Reconnect the A/C liquid line and the A/C suction line to the A/C expansion valve.

(5) Install the nut that secures the rear section of the A/C liquid line and the A/C suction line to the A/C expansion valve. Tighten the nut to 23 N·m (17 ft. lbs.).

(6) Remove the tape or plugs from the liquid line fitting and the receiver/drier outlet port.

LIQUID LINE (Continued)

(7) Lubricate a new rubber O-ring seal with clean refrigerant oil and install it on the liquid line fitting.

(8) Reconnect the A/C liquid line to the receiver/drier.

(9) Install the bolt that secures the A/C liquid line to the receiver/drier. Tighten the bolt to 11 N·m (97 in. lbs.).

(10) If equipped, reinstall the A/C ground strap eyelet terminal connector onto the weld stud on the top of the right front strut tower (if equipped).

(11) If equipped, install the nut that secures the A/C ground strap to the weld stud. Tighten the nut to 12 N·m (106 in. lbs.)

(12) Install the A/C pressure transducer (Refer to 24 - HEATING & AIR CONDITIONING/CONTROLS - FRONT/A/C PRESSURE TRANSDUCER - INSTALLATION).

(13) Connect the drain tube to the wiper module drain on the right side of the engine compartment.

(14) Install the air cleaner housing into the right side of the engine compartment.

(15) On RHD models, install the liquid line into the retaining bracket located at the top of the dash panel.

(16) If the vehicle is equipped with the optional rear heating-A/C system, go to Step 17. If the vehicle does not have the optional rear heating-A/C system, go to Step 23.

(17) Raise and support the vehicle.

(18) Remove the tape or plugs from the A/C liquid line extension fitting and the underbody liquid line fitting.

(19) Lubricate a new rubber O-ring seal with clean refrigerant oil and install it on the underbody liquid line fitting.

(20) Connect the A/C liquid line extension fitting to the underbody liquid line fitting. Tighten the fittings to 23 N·m (17 ft. lbs.).

(21) Install a new tie strap just forward of the connections between the underbody plumbing and the engine compartment plumbing for the rear heating-A/C system.

(22) Lower the vehicle.

(23) Reconnect the negative battery cable.

(24) Evacuate the refrigerant system (Refer to 24 - HEATING & AIR CONDITIONING/PLUMBING - FRONT/REFRIGERANT - STANDARD PROCEDURE - REFRIGERANT SYSTEM EVACUATE).

(25) Charge the refrigerant system (Refer to 24 - HEATING & AIR CONDITIONING/PLUMBING - FRONT/REFRIGERANT - STANDARD PROCEDURE - REFRIGERANT SYSTEM CHARGE).

RECEIVER / DRIER

DESCRIPTION

The receiver/drier is mounted in a bracket secured to the right front strut tower in the engine compartment. The receiver/drier is connected between the front and rear sections of the liquid line between the condenser outlet and the evaporator inlet. The receiver/drier cannot be repaired. If the receiver/drier is faulty or damaged, or if the refrigerant system has been contaminated or left open to the atmosphere for an indeterminable period or if the A/C compressor has failed, it must be replaced.

OPERATION

The receiver/drier performs a filtering action to prevent foreign material in the refrigerant from contaminating the expansion valve. Desiccant inside the receiver/drier canister absorbs any moisture which may have entered and become trapped within the refrigerant system. In addition, during periods of high demand air conditioner operation, the receiver/drier acts as a reservoir to store surplus refrigerant. Refrigerant enters the receiver/drier as a high-pressure, low temperature liquid.

REMOVAL

WARNING: REFER TO THE APPLICABLE WARNINGS AND CAUTIONS FOR THIS SYSTEM BEFORE PERFORMING THE FOLLOWING OPERATION (Refer to 24 - HEATING & AIR CONDITIONING/PLUMBING - FRONT - WARNING - A/C PLUMBING) and (Refer to 24 - HEATING & AIR CONDITIONING/PLUMBING - FRONT - CAUTION - A/C PLUMBING).

(1) Recover the refrigerant from the refrigerant system (Refer to 24 - HEATING & AIR CONDITIONING/PLUMBING - FRONT/REFRIGERANT - STANDARD PROCEDURE - REFRIGERANT RECOVERY).

(2) Remove the air cleaner housing from the right side of the engine compartment.

(3) Remove the bolt that secures the liquid line front section fitting to the top of the receiver/drier (Fig. 30).

(4) Disconnect the liquid line fitting from the receiver/drier inlet port.

(5) Remove the O-ring seal from the liquid line fitting and discard.

(6) Install plugs in, or tape over the opened liquid line fitting and the receiver/drier inlet port.

RECEIVER / DRIER (Continued)

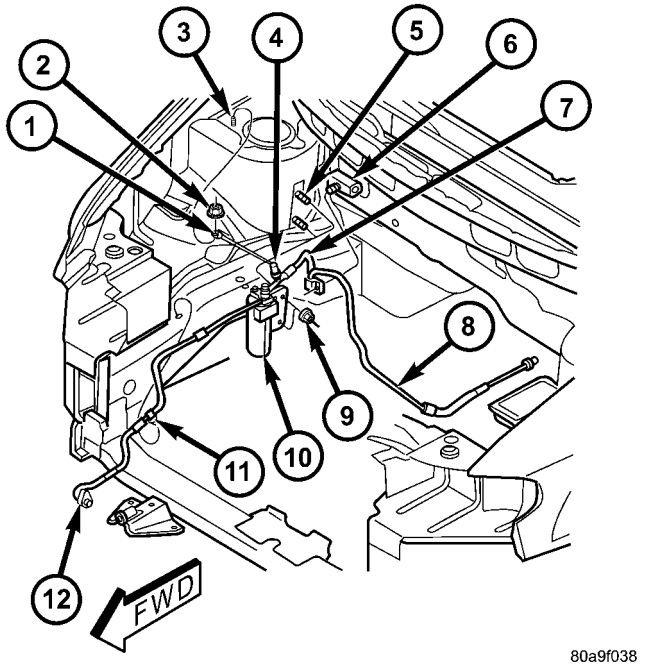

Fig. 30 Reciever/Drier - LHD Shown, RHD Typical

1 - A/C GROUND STRAP (IF EQUIPPED)
2 - NUT (IF EQUIPPED)
3 - WELD STUD (IF EQUIPPED)
4 - A/C PRESSURE TRANSDUCER
5 - WELD STUD (2)
6 - A/C EXPANSION VALVE
7 - A/C LIQUID LINE (REAR SECTION)
8 - LIQUID LINE EXTENSION (REAR A/C ONLY)
9 - NUT (2)
10 - RECEIVER/DRIER
11 - ROUTING CLIP
12 - A/C LIQUID LINE (FRONT SECTION)

(7) Remove the bolt that secures the liquid line rear section fitting to the top of the receiver/drier.

(8) Disconnect the liquid line fitting from the receiver/drier outlet port.

(9) Remove the seal from the liquid line fitting and discard.

(10) Install plugs in, or tape over the opened liquid line fitting and the receiver/drier outlet port.

(11) Remove the two nuts that secure the receiver/drier mounting bracket to the weld studs on the side of the right front strut tower.

(12) Remove the receiver/drier and mounting bracket unit from the studs.

INSTALLATION

NOTE: If the receiver/drier is being replaced, add 25 milliliters (0.8 fluid ounce) of refrigerant oil to the refrigerant system. Use only refrigerant oil of the type recommended for the A/C compressor in the vehicle.

(1) Position the receiver/drier and mounting bracket unit onto the weld studs on the side of the right front strut tower.

(2) Install the two nuts that secure the receiver/drier mounting bracket to the studs. Tighten the nuts to 10 N·m (89 in. lbs.).

(3) Remove the tape or plugs from the liquid line rear section fitting for the receiver/drier and the receiver/drier outlet port.

(4) Lubricate a new rubber O-ring seal with clean refrigerant oil and install it on the liquid line fitting.

(5) Reconnect the liquid line fitting to the receiver/drier outlet port on the top of the receiver/drier.

(6) Install the bolt that secures the liquid line fitting to the receiver/drier. Tighten the bolt to 11 N·m (97 in. lbs.).

(7) Remove the tape or plugs from the liquid line front section fitting for the receiver/drier and the receiver/drier inlet port.

(8) Lubricate a new rubber O-ring seal with clean refrigerant oil and install it on the liquid line fitting.

(9) Reconnect the liquid line fitting to the receiver/drier inlet port on the top of the receiver/drier.

(10) Install the bolt that secures the liquid line fitting to the receiver/drier. Tighten the bolt to 11 N·m (97 in. lbs.).

(11) Reinstall the air cleaner housing into the right side of the engine compartment.

(12) Evacuate the refrigerant system (Refer to 24 - HEATING & AIR CONDITIONING/PLUMBING - FRONT/REFRIGERANT - STANDARD PROCEDURE - REFRIGERANT SYSTEM EVACUATE).

(13) Charge the refrigerant system (Refer to 24 - HEATING & AIR CONDITIONING/PLUMBING - FRONT/REFRIGERANT - STANDARD PROCEDURE - REFRIGERANT SYSTEM CHARGE).

REFRIGERANT

DESCRIPTION

The refrigerant used in this air conditioning system is a HydroFluoroCarbon (HFC), type R-134a. Unlike R-12, which is a ChloroFluoroCarbon (CFC), R-134a refrigerant does not contain ozone-depleting chlorine. R-134a refrigerant is a non-toxic, non-flammable, clear, and colorless liquefied gas. Even though R-134a does not contain chlorine, it must be reclaimed and recycled just like CFC-type refrigerants. This is because R-134a is a greenhouse gas and can contribute to global warming.

REFRIGERANT (Continued)

OPERATION

R-134a refrigerant is not compatible with R-12 refrigerant in an air conditioning system. Even a small amount of R-12 added to an R-134a refrigerant system will cause compressor failure, refrigerant oil sludge or poor air conditioning system performance. In addition, the PolyAlkylene Glycol (PAG) synthetic refrigerant oils used in an R-134a refrigerant system are not compatible with the mineral-based refrigerant oils used in an R-12 refrigerant system. R-134a refrigerant system service ports, service tool couplers and refrigerant dispensing bottles have all been designed with unique fittings to ensure that an R-134a system is not accidentally contaminated with the wrong refrigerant (R-12). There are also labels posted in the engine compartment of the vehicle and on the compressor identifying to service technicians that the air conditioning system is equipped with R-134a.

REFRIGERANT OIL

DESCRIPTION

The refrigerant oil used in R-134a refrigerant systems is a synthetic-based, PolyAlkylene Glycol (PAG), wax-free lubricant. Mineral-based R-12 refrigerant oils are not compatible with PAG oils, and should never be introduced to an R-134a refrigerant system. There are different PAG oils available, and each contains a different additive package. The compressor used in this vehicle is designed to use an ND-8 PAG refrigerant oil. Use only refrigerant oil of this same type to service the refrigerant system.

OPERATION

After performing any refrigerant recovery or recycling operation, always replenish the refrigerant system with the same amount of the recommended refrigerant oil as was removed. Too little refrigerant oil can cause compressor damage, and too much can reduce air conditioning system performance. PAG refrigerant oil is much more hygroscopic than mineral oil, and will absorb any moisture it comes into contact with, even moisture in the air. The PAG oil container should always be kept tightly capped until it is ready to be used. After use, recap the oil container immediately to prevent moisture contamination.

STANDARD PROCEDURE

REFRIGERANT OIL LEVEL

WARNING: REFER TO THE APPLICABLE WARNINGS AND CAUTIONS FOR THIS SYSTEM BEFORE PERFORMING THE FOLLOWING OPERATION (Refer to 24 - HEATING & AIR CONDITIONING/PLUMBING - FRONT - WARNING - A/C PLUMBING) and (Refer to 24 - HEATING & AIR CONDITIONING/PLUMBING - FRONT - CAUTION - A/C PLUMBING).

CAUTION: Use only PAG oils that are designed to work with R-134a refrigerant and the A/C compressor in the vehicle. Refer to the underhood A/C System Specification Label.

It is important to have the correct amount of lubricant in the A/C refrigerant system to ensure proper lubrication of the A/C compressor. Too little lubricant will result in damage to the compressor. Too much lubricant will reduce the cooling capacity of the A/C system and consequently result in higher discharge air temperatures.

The lubricant used in the compressor is polyalkalene glycol PAG lubricant. Only the refrigerant lubricant approved for use with this vehicle should be used to service the system. Do not use any other lubricant. The lubricant container should be kept tightly capped until it is ready for use. Refrigerant lubricant will quickly absorb any moisture it comes in contact with.

It will not be necessary to check the oil level in the A/C compressor or to add oil, unless there has been an oil loss. An oil loss may occur due to a rupture or leak from a refrigerant line, connector fitting, component or component seal. If a leak occurs, add 30 milliliters (1 fluid ounce) of the recommended refrigerant oil to the refrigerant system after the repair has been made. Refrigerant oil loss will be evident at the leak point by the presence of a wet, shiny surface around the leak.

REFRIGERANT OIL LEVEL CHECK

When an air conditioning system is first assembled at the factory, all components (except the A/C compressor) are refrigerant oil free. After the refrigerant system has been charged with (R-134a) refrigerant and operated, the oil in the A/C compressor is dispersed through the lines and components. The A/C evaporator, A/C condenser, and receiver/drier will retain a significant amount of oil. Refer to the A/C Component Refrigerant Oil Capacities table. When a component is replaced, the specified amount of refrigerant oil must be added. When the compressor is replaced, the amount of oil that is retained in the

REFRIGERANT OIL (Continued)

rest of the system must be drained from the replacement A/C compressor. The oil capacity of the system, minus the amount of oil still in the remaining components (refer to the oil capacity chart below) can be measured and poured into the suction port of the A/C compressor. When a line or component has ruptured and oil has escaped, the receiver/drier must be replaced along with the ruptured component.

Example: On this A/C system the front A/C evaporator retains 50 ml. (1.7 oz.). The A/C condenser retains 50 ml. (1.7 oz.) of oil, and front A/C system oil capacity is 180 ml. (6.1 oz.).

180 ml. – 100 ml. = 80 ml. (2.7 oz.).

A/C COMPONENT REFRIGERANT OIL CAPACITIES

	Front A/C		Front & Rear A/C	
COMPONENT	ml	fl oz	ml	fl oz
Total System Fill	180	6.1	230	7.8
Receiver/Drier	25	0.8	25	0.8
A/C Condenser	50	1.7	50	1.7
Front Evaporator	50	1.7	50	1.7
Rear Evap. (including underbody lines)	N/A	N/A	50	1.7
A/C Compressor	Drain and measure the oil from the old A/C compressor - See text above.			

VERIFY REFRIGERANT LUBRICANT LEVEL

(1) Recover the refrigerant from the system.

(2) Disconnect the refrigerant lines from the A/C compressor. Cap open lines to prevent moisture from entering the system.

(3) Remove A/C compressor from the vehicle.

(4) From the suction and discharge ports on the A/C compressor, drain the lubricant from the compressor.

(5) Add the system capacity minus the capacity of the components that have not been replaced. Refer to the A/C Component Refrigerant Oil Capacities chart. Add lubricant through the suction and discharge ports on the A/C compressor.

(6) Install the A/C compressor and connect the refrigerant lines. Then evacuate and charge refrigerant system.

(7) Most reclaim/recycling equipment will measure the lubricant being removed. This amount of lubricant should be added back to the system. If a new A/C compressor is being installed, drain the lubricant from the used compressor, measure the amount drained and discard the used lubricant. Drain the lubricant from the new A/C compressor into a clean container. Return the amount of lubricant measured from the used compressor, plus the amount reclaimed from the system back into the new A/C compressor. Refer to the reclaim/recycling equipment manufacturers instructions.

SERVICE PORT VALVE CORE

DESCRIPTION

A/C SERVICE PORT VALVE CORES

The low side valve is located on the suction line near the A/C compressor. The low side A/C service port valve core is a serviceable item. The high side A/C service port valve core is located on the liquid line fitting attached to the top of the receiver/drier. The high side A/C service port valve core is not a separate serviceable item. If the high side service port valve core is faulty or damaged, the front section of the liquid line will require replacement.

REMOVAL

WARNING: REFER TO THE APPLICABLE WARNINGS AND CAUTIONS FOR THIS SYSTEM BEFORE PERFORMING THE FOLLOWING OPERATION (Refer to 24 - HEATING & AIR CONDITIONING/PLUMBING - FRONT - WARNING - A/C PLUMBING) and (Refer to 24 - HEATING & AIR CONDITIONING/PLUMBING - FRONT - CAUTION - A/C PLUMBING).

(1) Recover the refrigerant from the refrigerant system (Refer to 24 - HEATING & AIR CONDITIONING/PLUMBING - FRONT/REFRIGERANT - STANDARD PROCEDURE - REFRIGERANT RECOVERY).

(2) Using a standard Schrader-type valve core tool, remove the valve core from the low side A/C service port located on the suction line.

(3) Install a plug in or tape over the opened low side A/C service port.

INSTALLATION

(1) Lubricate the low side A/C service port valve core with clean refrigerant oil prior to installation. Use only refrigerant oil of the type recommended for the compressor in the vehicle.

(2) Remove the tape or plug from the A/C service port located on the suction line near the A/C compressor.

(3) Using a standard Schrader-type valve core tool, install and tighten the replacement valve core into the low side A/C service port.

SERVICE PORT VALVE CORE (Continued)

CAUTION: A valve core that is not fully seated in the A/C service port can result in damage to the valve during refrigerant system evacuation and charge. Such damage may result in a loss of system refrigerant while uncoupling the charge adapters.

(4) Evacuate the refrigerant system (Refer to 24 - HEATING & AIR CONDITIONING/PLUMBING - FRONT/REFRIGERANT - STANDARD PROCEDURE - REFRIGERANT SYSTEM EVACUATE).

(5) Charge the refrigerant system (Refer to 24 - HEATING & AIR CONDITIONING/PLUMBING - FRONT/REFRIGERANT - STANDARD PROCEDURE - REFRIGERANT SYSTEM CHARGE).

(6) Reinstall the protective cap onto the A/C service port.

SUCTION LINE

REMOVAL

WARNING: REFER TO THE APPLICABLE WARNINGS AND CAUTIONS FOR THIS SYSTEM BEFORE PERFORMING THE FOLLOWING OPERATION (Refer to 24 - HEATING & AIR CONDITIONING/PLUMBING - FRONT - WARNING - A/C PLUMBING) and (Refer to 24 - HEATING & AIR CONDITIONING/PLUMBING - FRONT - CAUTION - A/C PLUMBING).

NOTE: The front suction line includes the low side service port on a section of tubing located near the A/C compressor. On models equipped with the optional rear A/C system, the front suction line also includes a suction line hose and tube extension that connects the front suction line to the suction line for the rear A/C system.

(1) Recover the refrigerant from the refrigerant system (Refer to 24 - HEATING & AIR CONDITIONING/PLUMBING - FRONT/REFRIGERANT - STANDARD PROCEDURE - REFRIGERANT RECOVERY).

(2) Disconnect and isolate the battery negative cable.

(3) Remove the air cleaner top cover and snorkel from the air cleaner housing located on the right side of the engine compartment.

(4) Disconnect the drain tube from the wiper module drain on the right side of the engine compartment.

(5) Remove the nut that secures the suction line fitting to the top of the A/C compressor.

(6) Disconnect the suction line fitting from the compressor suction port.

(7) Remove the O-ring seal from the suction line fitting and discard.

(8) Install plugs in, or tape over the opened suction line fitting and the compressor suction port.

(9) Remove the retainer that secures the suction line routing clip to the receiver/drier mounting bracket on the side of the right front strut tower in the engine compartment (Fig. 31).

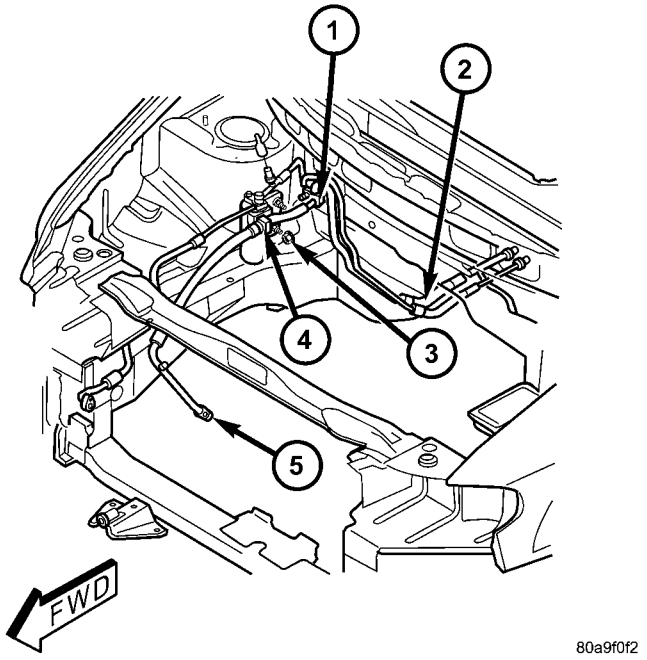

Fig. 31 Suction Line - LHD Shown, RHD Typical

1 - A/C EXPANSION VALVE
2 - SUCTION LINE EXTENSION (REAR A/C ONLY)
3 - NUT
4 - RETAINING CLIP
5 - SUCTION LINE

(10) Remove the nut that secures the suction line and liquid line fittings to the expansion valve.

(11) Disconnect the suction line and liquid line fittings from the expansion valve.

(12) Remove the seals from the suction line and liquid line fittings and discard.

(13) Install plugs in, or tape over the opened suction line and liquid line fittings and both expansion valve ports.

(14) Remove the suction line from the retaining bracket located at the top of the dash panel.

(15) If the vehicle is equipped with the optional rear air conditioner, go to Step 16. If the vehicle does not have the optional rear air conditioner, go to Step 22.

(16) Raise and support the vehicle.

(17) Cut the tie strap located just forward of the connections between the underbody plumbing and the engine compartment plumbing for the rear heater and air conditioner (Fig. 32).

SUCTION LINE (Continued)

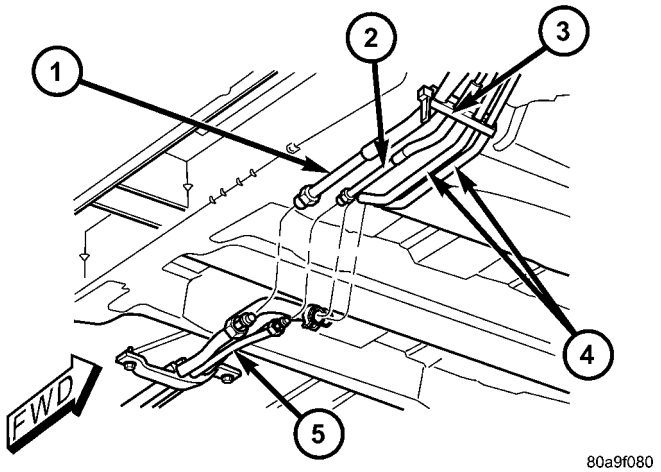

Fig. 32 Underbody A/C Line Connections

1 - SUCTION LINE EXTENSION TUBE
2 - LIQUID LINE EXTENSION TUBE
3 - RETAINING STRAP
4 - REAR HEATER EXTENSION TUBES
5 - UNDERBODY REFRIGERANT LINES

(18) Disconnect the suction line extension fitting from the underbody suction line fitting for the rear air conditioner.

(19) Remove the O-ring seal from the underbody suction line fitting and discard.

(20) Install plugs in, or tape over the opened suction line fittings.

(21) Lower the vehicle.

(22) Remove the suction line from the engine compartment.

INSTALLATION

(1) Position the suction line into the engine compartment.

(2) Remove the tape or plugs from the suction line and liquid line fittings and both expansion valve ports.

(3) Lubricate new rubber O-ring seals with clean refrigerant oil and install them on the suction line and liquid line fittings.

(4) Reconnect the liquid line and suction line fittings to the expansion valve.

(5) Install the nut that secures the suction line and liquid line fittings to the expansion valve. Tighten the nut to 23 N·m (17 ft. lbs.).

(6) Install the retainer that secures the suction line routing clip to the receiver/drier mounting bracket on the side of the right front strut tower in the engine compartment.

(7) Remove the tape or plugs from the compressor suction port and the suction line fitting.

(8) Lubricate a new rubber O-ring seal with clean refrigerant oil and install it on the suction line fitting.

(9) Install a new dual plan seal and reconnect the suction line fitting to the compressor suction port.

(10) Install the nut that secures the suction line fitting to the A/C compressor. Tighten the nut to 23 N·m (17 ft. lbs.).

(11) Reconnect the drain tube to the wiper module drain on the right side of the engine compartment.

(12) Install the air cleaner top cover and snorkel onto the air cleaner housing located on the right side of the engine compartment.

(13) On RHD models, install the suction line into the retaining bracket located at the top of the dash panel.

(14) If the vehicle is equipped with the optional rear air conditioner, go to Step 15. If the vehicle does not have the optional rear air conditioner, go to Step 21.

(15) Raise and support the vehicle.

(16) Remove the tape or plugs from the suction line extension fitting and the underbody suction line fitting.

(17) Lubricate a new rubber O-ring seal with clean refrigerant oil and install it on the underbody suction line fitting.

(18) Reconnect the suction line extension fitting to the underbody suction line fitting. Tighten the fittings to 23 N·m (17 ft. lbs.).

(19) Install a new tie strap just forward of the connections between the underbody plumbing and the engine compartment plumbing for the rear heater and air conditioner.

(20) Lower the vehicle.

(21) Reconnect the battery negative cable.

(22) Evacuate the refrigerant system (Refer to 24 - HEATING & AIR CONDITIONING/PLUMBING - FRONT/REFRIGERANT - STANDARD PROCEDURE - REFRIGERANT SYSTEM EVACUATE).

(23) Charge the refrigerant system (Refer to 24 - HEATING & AIR CONDITIONING/PLUMBING - FRONT/REFRIGERANT - STANDARD PROCEDURE - REFRIGERANT SYSTEM CHARGE).

PLUMBING - REAR

TABLE OF CONTENTS

page

A/C EVAPORATOR
DESCRIPTION 98
OPERATION 98
REMOVAL
REAR A/C EVAPORATOR 98
REAR A/C EVAPORATOR LINE EXTENSION 99
INSTALLATION
REAR A/C EVAPORATOR 100
REAR A/C EVAPORATOR LINE EXTENSION 100
A/C EXPANSION VALVE
DESCRIPTION 100
OPERATION 100
DIAGNOSIS AND TESTING
REAR A/C EXPANSION VALVE 101
REMOVAL 101
INSTALLATION 101
HEATER CORE
DESCRIPTION 102
OPERATION 102
STANDARD PROCEDURE
REAR HEATER CORE FILLING 102
REMOVAL 103
INSTALLATION 104
HEATER HOSES
REMOVAL 104
INSTALLATION 105
LIQUID LINE
REMOVAL 105
INSTALLATION 106
SUCTION LINE
REMOVAL 106
INSTALLATION 107
UNDERBODY LINES
DESCRIPTION 108
OPERATION 108
REMOVAL
UNDERBODY HEATER TUBES 109
UNDERBODY REFRIGERANT LINES 110
INSTALLATION
UNDERBODY HEATER TUBES 112
UNDERBODY REFRIGERANT LINES 112

A/C EVAPORATOR

DESCRIPTION

The rear A/C evaporator is located in the rear HVAC housing, behind the right rear wheel house. The evaporator is positioned in the rear housing so that all air that enters the housing must pass over the fins of the evaporator coils before it is distributed through the system ducts and outlets. However, air passing over the evaporator fins will only be conditioned when the compressor is engaged and circulating refrigerant through the evaporator tubes. The rear HVAC housing must be removed from the vehicle to access the A/C evaporator for service.

OPERATION

Refrigerant enters the rear evaporator from the rear expansion valve as a low-temperature, low-pressure liquid. As air flows over the fins of the evaporator, the humidity in the air condenses on the fins, and the heat from the air is absorbed by the refrigerant. Heat absorption causes the refrigerant to boil and vaporize. The refrigerant becomes a low-pressure gas when it leaves the evaporator.

REMOVAL

REAR A/C EVAPORATOR

WARNING: REFER TO THE APPLICABLE WARNINGS AND CAUTIONS FOR THIS SYSTEM BEFORE PERFORMING THE FOLLOWING OPERATION (Refer to 24 - HEATING & AIR CONDITIONING/PLUMBING - FRONT - WARNING - A/C PLUMBING), (Refer to 24 - HEATING & AIR CONDITIONING/PLUMBING - FRONT - CAUTION - A/C PLUMBING), and (Refer to 24 - HEATING & AIR CONDITIONING/PLUMBING - FRONT - WARNING - HEATER PLUMBING).

(1) Remove the rear HVAC housing from the vehicle (Refer to 24 - HEATING & AIR CONDITIONING/DISTRIBUTION/HVAC HOUSING - REMOVAL).
(2) Remove the rear evaporator line extension from the expansion valve (Refer to 24 - HEATING & AIR CONDITIONING/PLUMBING - REAR/EVAPORATOR - REMOVAL - EVAPORATOR LINE EXTENSION).
(3) Remove the rear expansion valve from the rear evaporator (Refer to 24 - HEATING & AIR CONDI-

A/C EVAPORATOR (Continued)

TIONING/PLUMBING - REAR/EXPANSION VALVE - REMOVAL).

(4) Remove the rubber grommet that seals the evaporator inlet and outlet tubes to the rear HVAC housing near the expansion valve.

(5) Remove the three screws that secure the upper half of the rear HVAC housing to the lower half (Fig. 1).

(6) Remove the three metal spring clips that secure the upper half of the rear HVAC housing to the lower half.

(7) Carefully separate and remove the upper half of the rear HVAC housing from the lower half.

(8) Remove the A/C evaporator from the lower half of the rear HVAC housing.

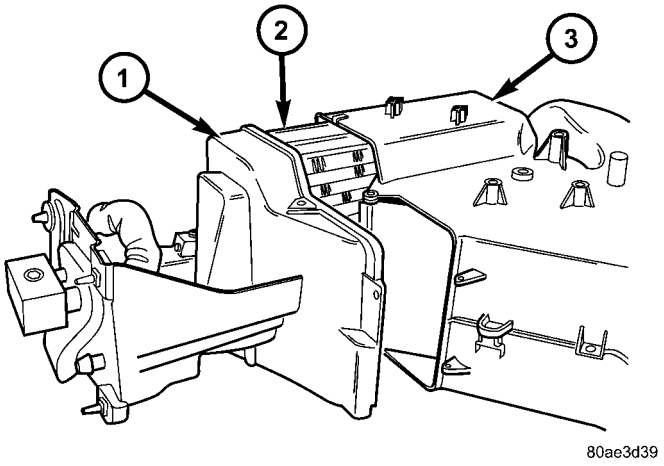

Fig. 1 Rear A/C Evaporator

1 - UPPER REAR HVAC HOUSING
2 - REAR A/C EVAPORATOR
3 - LOWER REAR HVAC HOUSING

REAR A/C EVAPORATOR LINE EXTENSION

WARNING: REFER TO THE APPLICABLE WARNINGS AND CAUTIONS FOR THIS SYSTEM BEFORE PERFORMING THE FOLLOWING OPERATION (Refer to 24 - HEATING & AIR CONDITIONING/PLUMBING - FRONT - WARNING - A/C PLUMBING), (Refer to 24 - HEATING & AIR CONDITIONING/PLUMBING - FRONT - CAUTION - A/C PLUMBING), and (Refer to 24 - HEATING & AIR CONDITIONING/PLUMBING - FRONT - WARNING - HEATER PLUMBING).

(1) Remove the rear HVAC housing from the vehicle (Refer to 24 - HEATING & AIR CONDITIONING/DISTRIBUTION/HVAC HOUSING - REMOVAL).

(2) Remove the screw that secures the plate that captures and seals the evaporator line extension within the base of the rear HVAC housing (Fig. 2).

(3) Remove the capture plate from the rear HVAC housing base.

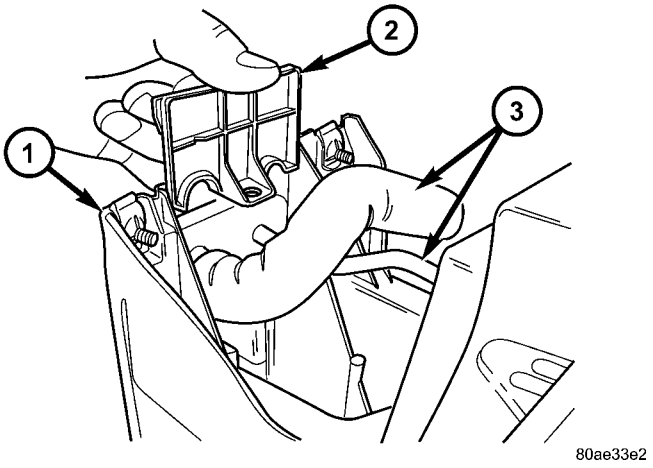

Fig. 2 Evaporator Line Extension Plate

1 - REAR HVAC HOUSING BASE
2 - PLATE
3 - EVAPORATOR LINE EXTENSION

(4) Carefully peel back the expansion valve foam insulator wrap far enough to access the evaporator line extension sealing plate on the bottom of the expansion valve (Fig. 3).

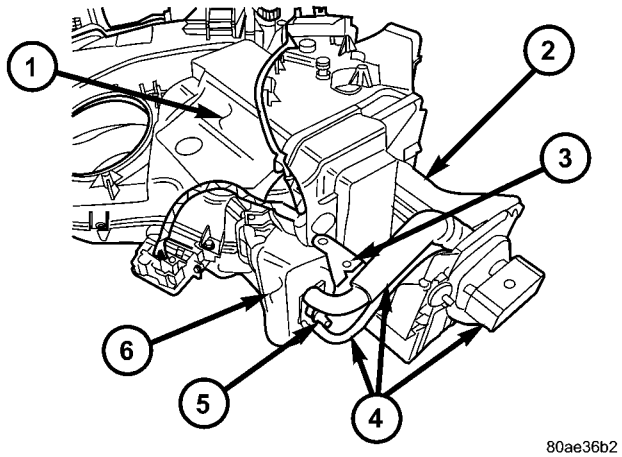

Fig. 3 Rear A/C Evaporator Line Extension

1 - UPPER REAR HVAC HOUSING
2 - LOWER REAR HVAC HOUSING
3 - EXPANSION VALVE BRACKET
4 - EVAPORATOR LINE EXTENSION
5 - EXPANSION VALVE STUD
6 - INSULATOR WRAP

(5) Remove the two screws that secure the expansion valve bracket to the lower rear HVAC housing.

(6) Remove the nut that secures the expansion valve bracket to the expansion valve stud.

(7) Remove the expansion valve bracket from the expansion valve stud.

(8) Remove the nut that secures the evaporator line extension seal plate to the expansion valve stud.

A/C EVAPORATOR (Continued)

(9) Remove the evaporator line extension seal plate from the expansion valve stud.

(10) Remove the evaporator line extension from the expansion valve and the rear HVAC housing base.

(11) Remove the seals from the evaporator line extension fittings and discard.

(12) Install plugs in, or tape over the opened evaporator line extension fittings and both expansion valve ports.

INSTALLATION

REAR A/C EVAPORATOR

NOTE: If the rear A/C evaporator is being replaced, add 50 milliliters (1.7 fluid ounces) of refrigerant oil to the refrigerant system. Use only refrigerant oil of the type recommended for the A/C compressor in the vehicle.

(1) Carefully lower the rear A/C evaporator and its foam wrap into the lower half of the rear HVAC housing.

(2) Position the upper half of the rear HVAC housing onto the lower half.

(3) Install the three metal spring clips that secure the upper half of the rear HVAC housing to the lower half.

(4) Install the three screws that secure the upper half of the rear HVAC housing to the lower half. Tighten the screws to 2 N·m (17 in. lbs.).

(5) Install the rubber grommet that seals the evaporator inlet and outlet tubes to the rear HVAC housing near the expansion valve.

(6) Reinstall the rear expansion valve onto the rear A/C evaporator (Refer to 24 - HEATING & AIR CONDITIONING/PLUMBING - REAR/EXPANSION VALVE - INSTALLATION).

(7) Reinstall the rear evaporator extension line onto the expansion valve (Refer to 24 - HEATING & AIR CONDITIONING/PLUMBING - REAR/EVAPORATOR - INSTALLATION - EVAPORATOR EXTENSION LINE).

(8) Reinstall the rear HVAC housing into the vehicle (Refer to 24 - HEATING & AIR CONDITIONING/DISTRIBUTION - REAR/REAR HEATER-A/C HOUSING - INSTALLATION).

REAR A/C EVAPORATOR LINE EXTENSION

(1) Remove the tape or plugs from the evaporator line extension fittings and both expansion valve ports.

(2) Lubricate new rubber O-ring seals with clean refrigerant oil and install them on the evaporator line extension fittings.

(3) Position the evaporator line extension to the expansion valve and the rear HVAC housing base.

(4) Position the evaporator line extension seal plate over the expansion valve stud.

(5) Install the nut that secures the evaporator line extension seal plate to the expansion valve stud. Tighten the nut to 23 N·m (17 ft. lbs.).

(6) Position the expansion valve bracket over the expansion valve stud.

(7) Install the two screws that secure the expansion valve bracket to the lower rear HVAC housing. Tighten the screws to 2 N·m (17 in. lbs.).

(8) Install the nut that secures the expansion valve bracket to the expansion valve stud. Tighten the nut to 23 N·m (17 ft. lbs.).

(9) Carefully restore the expansion valve foam insulator wrap back around the expansion valve.

(10) Position the plate that captures and seals the evaporator line extension onto the rear HVAC housing base.

(11) Install the screw that secures the capture plate to the base of the rear HVAC housing. Tighten the screw to 2 N·m (17 in. lbs.).

(12) Install the rear HVAC housing into the vehicle (Refer to 24 - HEATING & AIR CONDITIONING/DISTRIBUTION/HVAC HOUSING - INSTALLATION).

A/C EXPANSION VALVE

DESCRIPTION

The rear “H” valve-type thermal expansion valve (TXV) is located at the rear of the rear HVAC housing between the evaporator line extension and the evaporator coil. High-pressure, low temperature liquid refrigerant from the liquid line passes through the expansion valve orifice, converting it into a low-pressure, low-temperature mixture of liquid and gas before it enters the evaporator coil.

OPERATION

A mechanical sensor in the expansion valve control head monitors the temperature and pressure of the refrigerant leaving the evaporator coil through the suction line, and adjusts the orifice size at the liquid line to let the proper amount of refrigerant into the evaporator coil to meet the vehicle cooling requirements. Controlling the refrigerant flow through the evaporator ensures that none of the refrigerant leaving the evaporator is still in a liquid state, which could damage the compressor.

The rear A/C expansion valve cannot be adjusted or repaired and, if faulty or damaged, it must be replaced.

A/C EXPANSION VALVE (Continued)

DIAGNOSIS AND TESTING

REAR A/C EXPANSION VALVE

WARNING: REFER TO THE APPLICABLE WARNINGS AND CAUTIONS FOR THIS SYSTEM BEFORE PERFORMING THE FOLLOWING OPERATION. (Refer to 24 - HEATING & AIR CONDITIONING/ PLUMBING - FRONT - WARNING - A/C PLUMBING) and (Refer to 24 - HEATING & AIR CONDITIONING/ PLUMBING - FRONT - CAUTION - A/C PLUMBING).

NOTE: The expansion valve should only be tested following testing of the compressor.

NOTE: Liquid CO^2 is required to test the expansion valve. This material is available from most welding supply facilities. Liquid CO^2 is also available from companies which service and sell fire extinguishers.

When testing the expansion valve, the work area and the vehicle temperature must be 21° to 27° C (70° to 85° F). To test the expansion valve:

(1) Connect a charging station or manifold gauge set to the refrigerant system service ports. Verify the refrigerant charge level.

(2) Close all doors, windows and vents to the passenger compartment.

(3) Set the heater-air conditioner controls so that the compressor is operating, the temperature control is in the highest temperature position, the mode door is directing the output to the floor outlets, and the blower is operating at the highest speed setting.

(4) Start the engine and allow it to idle at 1000 rpm. After the engine has reached normal operating temperature, allow the passenger compartment to heat up. This will create the need for maximum refrigerant flow into the evaporator.

(5) If the refrigerant charge is sufficient, the discharge (high pressure) gauge should read 965 to 1655 kPa (140 to 240 psi). The suction (low pressure) gauge should read 140 kPa to 207 kPa (20 psi to 30 psi). If OK, go to Step 6. If not OK, replace the faulty expansion valve.

WARNING: PROTECT THE SKIN AND EYES FROM EXPOSURE TO LIQUID CO^2. PERSONAL INJURY CAN RESULT.

(6) If the suction (low pressure) gauge reads within the specified range, freeze the expansion valve control head for 30 seconds using liquid CO^2 or another suitable super-cold material.**Do not spray R-134a or R-12 refrigerant on the expansion valve control head for this test.** The suction (low pressure) gauge reading should drop by 10 psi. If OK, go to Step 7 If not OK, replace the faulty expansion valve.

(7) Allow the expansion valve control head to thaw. The suction (low pressure) gauge reading should stabilize at 140 kPa to 240 kPa (20 psi to 30 psi). If not OK, replace the faulty expansion valve.

(8) When expansion valve testing is complete, test the overall air conditioner performance (Refer to 24 - HEATING & AIR CONDITIONING - DIAGNOSIS AND TESTING - A/C PERFORMANCE TEST). Remove all test equipment before returning the vehicle to service.

REMOVAL

WARNING: REFER TO THE APPLICABLE WARNINGS AND CAUTIONS FOR THIS SYSTEM BEFORE PERFORMING THE FOLLOWING OPERATION (Refer to 24 - HEATING & AIR CONDITIONING/PLUMBING - FRONT - WARNING - A/C PLUMBING), (Refer to 24 - HEATING & AIR CONDITIONING/PLUMBING - FRONT - CAUTION - A/C PLUMBING), and (Refer to 24 - HEATING & AIR CONDITIONING/PLUMBING - FRONT - WARNING - HEATER PLUMBING).

(1) Remove the rear HVAC housing from the vehicle (Refer to 24 - HEATING & AIR CONDITIONING/ DISTRIBUTION/HVAC HOUSING - REMOVAL).

(2) Carefully remove the foam insulator wrap from the rear expansion valve.

(3) Remove the rear evaporator line extension from the expansion valve (Refer to 24 - HEATING & AIR CONDITIONING/PLUMBING - REAR/EVAPORATOR - REMOVAL - EVAPORATOR LINE EXTENSION).

(4) Remove the two screws that secure the expansion valve to the evaporator tube sealing plate.

(5) Remove the expansion valve from the evaporator tubes.

(6) Remove the seals from the evaporator tube fittings and discard.

(7) Install plugs in, or tape over the opened evaporator tube fittings and both expansion valve ports.

INSTALLATION

(1) Remove the tape or plugs from the rear A/C evaporator tube fittings and both expansion valve ports.

(2) Lubricate new rubber O-ring seals with clean refrigerant oil and install them on the rear evaporator tube fittings.

(3) Position the expansion valve onto the evaporator tubes.

(4) Install the two screws that secure the rear A/C expansion valve to the evaporator tube sealing plate. Tighten the screws to 11 N·m (97 in. lbs.).

A/C EXPANSION VALVE (Continued)

(5) Install the rear evaporator line extension onto the expansion valve (Refer to 24 - HEATING & AIR CONDITIONING/PLUMBING - REAR/EVAPORATOR - INSTALLATION - EVAPORATOR LINE EXTENSION).

(6) Install the foam insulator wrap over the rear expansion valve.

(7) Install the rear HVAC housing (Refer to 24 - HEATING & AIR CONDITIONING/DISTRIBUTION/HVAC HOUSING - INSTALLATION).

(8) Run the HVAC Cooldown Test to verify proper operation.

HEATER CORE

DESCRIPTION

The rear heater core is located near the front of the rear HVAC housing, behind the right rear wheel house. It is a heat exchanger made of rows of tubes and fins. One end of the core is fitted with a molded plastic tank that includes integral heater core inlet and outlet nipples. The rear heater core can be serviced without removing the rear HVAC housing from the vehicle.

OPERATION

Engine coolant is circulated through underbody heater hoses to the rear heater core at all times. As the coolant flows through the rear heater core, heat removed from the engine is transferred to the heater core fins and tubes. Air directed through the heater core picks up the heat from the heater core fins. The rear blend door allows control of the rear heater output air temperature by controlling how much of the air flowing through the rear HVAC housing is directed through the heater core.

The rear heater core cannot be repaired and, if faulty or damaged, it must be replaced.

STANDARD PROCEDURE

REAR HEATER CORE FILLING

In its final installed position, the rear heater core is positioned higher than the radiator fill cap. Therefore, when the cooling system is drained and refilled, gravity will not refill the heater core with coolant to the proper level. This may result in two problems: **1.** Insufficient coolant level in the engine cooling system, which may result in engine overheating. **2.** Air entrapped within the rear heater core, which may result in insufficient rear heater performance. There are two methods that may be employed to prevent these problems: **1.** Pre-filling of the rear heater core. **2.** Thermal cycling of the engine cooling system. Following are descriptions of both prevention methods, as well as a method to verify rear heater performance.

WARNING: REFER TO THE APPLICABLE WARNINGS AND CAUTIONS FOR THIS SYSTEM BEFORE PERFORMING THE FOLLOWING OPERATION (Refer to 24 - HEATING & AIR CONDITIONING/PLUMBING FRONT - WARNING - HEATER PLUMBING).

PRE-FILLING

If the rear heater core or the rear HVAC housing have been removed from the vehicle for service, the rear heater core may be pre-filled with the proper engine coolant mixture prior to reconnecting the heater hoses to the heater core hose fittings.

(1) The heater core should be installed in the rear HVAC housing, and the rear HVAC housing should be installed in the vehicle.

(2) Take the proper precautions to protect the carpeting below the rear heater core from spilled engine coolant and have absorbent toweling readily available to mop up any spills.

(3) Insert the small end of an appropriate funnel into the upper hose fitting of the heater core (Fig. 4).

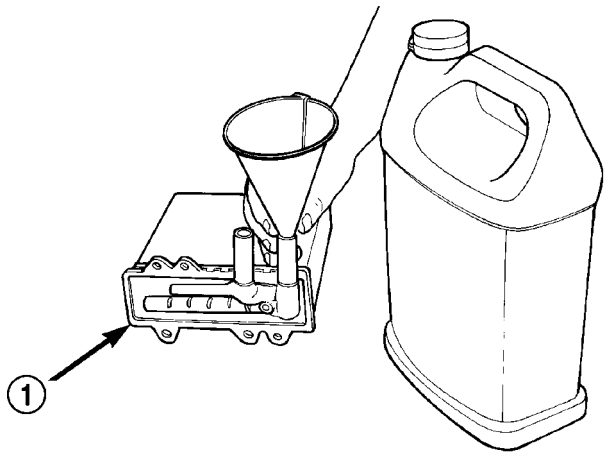

800ced5c

Fig. 4 Pre-Filling Heater Core - Typical

1 - REAR HEATER CORE

(4) Carefully pour the proper pre-mixed engine coolant solution into the rear heater core through a funnel until coolant begins to appear at the lower hose fitting of the heater core.

(5) Use absorbent toweling to clean up any engine coolant spills from the preceding operation.

(6) Reconnect the heater hoses to the rear heater core (Refer to 24 - HEATING & AIR CONDITIONING/PLUMBING - REAR/HEATER HOSE - INSTALLATION).

HEATER CORE (Continued)

(7) Refill the engine cooling system (Refer to 7 - COOLING - STANDARD PROCEDURE - COOLING SYSTEM REFILL).

THERMAL CYCLING

If the rear heater core was emptied and was not pre-filled, it will be necessary to thermal cycle the vehicle at least two times to ensure that the rear heater core is properly filled.

(1) Refill the engine cooling system (Refer to 7 - COOLING - STANDARD PROCEDURE - COOLING SYSTEM REFILL).

(2) Start the engine and allow it to operate until the thermostat opens.

(3) Turn the engine off and allow it to cool.

(4) With the engine cold and not running, check and top off the engine coolant level as necessary (Refer to 7 - COOLING - STANDARD PROCEDURE - COOLANT LEVEL CHECK) and (Refer to 7 - COOLING - STANDARD PROCEDURE - COOLANT - ADDING).

(5) Start the engine and allow it to operate until the thermostat opens again.

(6) Turn the engine off and allow it to cool down again.

(7) With the engine cold and not running, check and top off the engine coolant level as necessary (Refer to 7 - COOLING - STANDARD PROCEDURE - COOLANT LEVEL CHECK) and (Refer to 7 - COOLING - STANDARD PROCEDURE - COOLANT - ADDING).

(8) Check the performance of the rear heater. Refer to REAR HEATER PERFORMANCE CHECK.

REAR HEATER PERFORMANCE CHECK

Successful completion of the rear heater performance check will confirm that the rear heater core is properly filled with engine coolant. If the check is not successful, either there is still air trapped in the rear heater core or the rear heater plumbing is restricted. This check should be performed with the vehicle in a shop where the ambient temperature is about 21° C (70° F).

(1) Start the engine and allow it to idle until it warms up to normal operating temperature.

(2) Adjust the heater-A/C controls so that the front heater is turned Off, the rear heater is set for full Heat, and the rear blower motor is at its highest speed setting.

(3) Use an accurate test thermometer to measure the temperature of the air being discharged from the rear heater outlet located at the base of the right C-pillar.

(4) Proper discharge air temperature readings should be from 57° to 63° C (135° to 145° F).

REMOVAL

WARNING: REFER TO THE APPLICABLE WARNINGS AND CAUTIONS FOR THIS SYSTEM BEFORE PERFORMING THE FOLLOWING OPERATION (Refer to 24 - HEATING & AIR CONDITIONING/PLUMBING FRONT - WARNING - HEATER PLUMBING).

(1) Drain the engine cooling system (Refer to 7 - COOLING - STANDARD PROCEDURE - COOLING SYSTEM DRAIN).

(2) Remove the right quarter trim panel and right D-pillar trim panel from the quarter inner panel (Refer to 23 - BODY/INTERIOR/QUARTER TRIM PANEL - REMOVAL).

(3) Remove the rear heater distribution duct from the right quarter inner panel (Refer to 24 - HEATING & AIR CONDITIONING/DISTRIBUTION - REAR/REAR HEATER DISTRIBUTION DUCT - REMOVAL).

(4) Remove the screw that secures the back of the rear HVAC housing to the right D-pillar.

(5) Remove the screw that secures the front of the rear HVAC housing to the right quarter inner panel.

(6) Take the proper precautions to protect the carpeting below the rear heater core from spilled engine coolant and have absorbent toweling readily available to mop up any spills.

(7) Disconnect the heater hoses at the rear heater core (Refer to 24 - HEATING & AIR CONDITIONING/PLUMBING - REAR/HEATER HOSE - REMOVAL).

(8) Install plugs in, or tape over the opened heater core fittings and both heater hoses (Fig. 5).

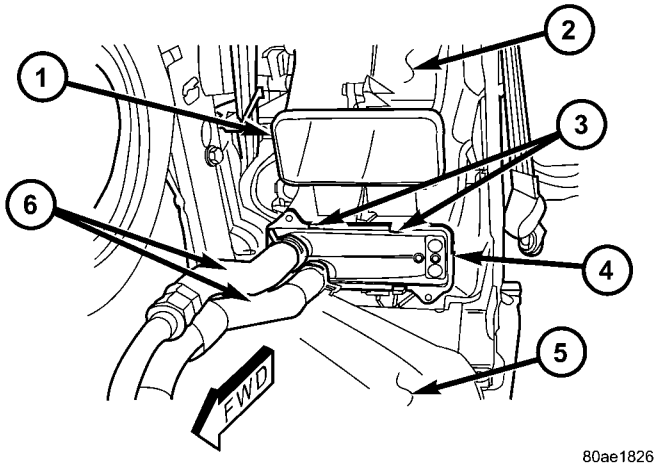

Fig. 5 Rear Heater Core

1 - REAR HVAC HOUSING OUTLET
2 - REAR HVAC UNIT HOUSING
3 - LATCH (4)
4 - REAR HEATER CORE
5 - RIGHT REAR WHEEL HOUSE
6 - REAR HEATER HOSES

HEATER CORE (Continued)

(9) Use absorbent toweling to clean up any engine coolant spills from the preceding operation.

(10) Release the four latch tabs that secure the heater core into the rear HVAC housing.

(11) Carefully pull the heater core straight out of the rear HVAC housing.

(12) Use absorbent toweling to clean up any engine coolant spills from the preceding operation.

INSTALLATION

NOTE: If the rear heater core or the rear HVAC housing have been removed from the vehicle for service, the rear heater core may be pre-filled with the proper engine coolant mixture prior to reconnecting the heater hoses to the heater core hose fittings (Refer to 24 - HEATING & AIR CONDITIONING/PLUMBING - REAR/HEATER CORE - STANDARD PROCEDURE - HEATER CORE FILLING).

(1) Carefully slide the heater core into the rear HVAC housing.

(2) Using hand pressure, press firmly and evenly on the heater core end plate until the four latch tabs that secure the heater core in the rear HVAC housing are fully engaged.

(3) Remove the plugs or tape from the heater core fittings and both heater hoses.

(4) Reconnect the heater hoses to the rear heater core (Refer to 24 - HEATING & AIR CONDITIONING/PLUMBING - REAR/HEATER HOSE - INSTALLATION).

(5) Install the screw that secures the front of the rear HVAC housing to the right quarter inner panel. Tighten the screw to 11 N·m (97 in. lbs.).

(6) Install the screw that secures the back of the rear HVAC housing to the right D-pillar. Tighten the screw to 11 N·m (97 in. lbs.).

(7) Install the rear heater distribution duct (Refer to 24 - HEATING & AIR CONDITIONING/DISTRIBUTION - REAR/REAR HEATER DISTRIBUTION DUCT - INSTALLATION).

(8) Install the right quarter trim panel and right D-pillar trim panel (Refer to 23 - BODY/INTERIOR/QUARTER TRIM PANEL - INSTALLATION).

(9) Refill the engine cooling system (Refer to 7 - COOLING - STANDARD PROCEDURE - COOLING SYSTEM REFILL).

HEATER HOSES

REMOVAL

WARNING: REFER TO THE APPLICABLE WARNINGS AND CAUTIONS FOR THIS SYSTEM BEFORE PERFORMING THE FOLLOWING OPERATION (Refer to 24 - HEATING & AIR CONDITIONING/PLUMBING - WARNING).

(1) Drain the engine cooling system (Refer to 7 - COOLING - STANDARD PROCEDURE - COOLING SYSTEM DRAIN).

(2) Using spring tension clamp pliers, compress and slide the clamps off of each end of the hose being removed.

CAUTION:
DO NOT apply excessive pressure on heater tubes or connections when removing heater hoses. Excessive pressure may damage or deform the tubes, causing an engine coolant leak.

(3) Disconnect the front underbody heater inlet and return hose by carefully twisting the hoses back and forth on the underbody tubes, while gently pulling them away from the end of the tubes (Fig. 6).

(4) If necessary, carefully cut the hose ends and peel the hoses off of the tubes.

NOTE:
Replacement of the heater hoses will be required if the hose ends are cut for removal.

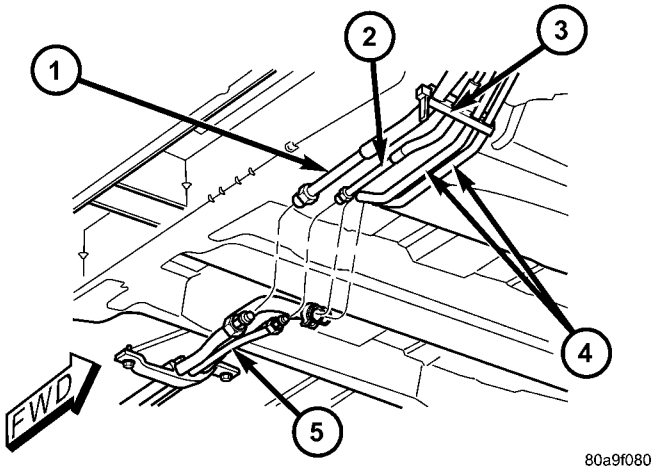

Fig. 6 Underbody Heater Hose Connections - Front

1 - SUCTION LINE EXTENSION
2 - LIQUID LINE EXTENSION
3 - RETAINER STRAP (3)
4 - HEATER TUBES
5 - UNDERBODY LINES

HEATER HOSES (Continued)

INSTALLATION

(1) Install the front underbody heater inlet and return hoses by carefully twisting the hoses back and forth on the underbody tubes, while gently pushing them onto the end of the tubes.

CAUTION:
DO NOT apply excessive pressure on heater tubes or connections when removing heater hoses. Excessive pressure may damage or deform the tubes, causing an engine coolant leak.

(2) Using spring tension clamp pliers, compress and slide the clamps that secure each end of the heater hose over the tubes. Release the clamp when it is over the tube.

(3) Refill the engine cooling system (Refer to 7 - COOLING - STANDARD PROCEDURE - COOLING SYSTEM REFILL).

LIQUID LINE

REMOVAL

WARNING: REFER TO THE APPLICABLE WARNINGS AND CAUTIONS FOR THIS SYSTEM BEFORE PERFORMING THE FOLLOWING OPERATION (Refer to 24 - HEATING & AIR CONDITIONING/PLUMBING - FRONT - WARNING - A/C PLUMBING) and (Refer to 24 - HEATING & AIR CONDITIONING/PLUMBING - FRONT - CAUTION - A/C PLUMBING).

NOTE: On models equipped with the optional rear A/C system, the rear section of the front air conditioner liquid line also includes a liquid line hose and tube extension that connects the front liquid line to the underbody liquid line for the rear A/C system.

(1) Recover the refrigerant from the refrigerant system (Refer to 24 - HEATING & AIR CONDITIONING/PLUMBING - FRONT/REFRIGERANT - STANDARD PROCEDURE - REFRIGERANT RECOVERY).

(2) Disconnect and isolate the battery negative cable.

(3) Remove the air cleaner housing from the right side of the engine compartment.

(4) Disconnect the drain tube from the wiper module drain on the right side of the engine compartment.

(5) Remove the A/C pressure transducer (Refer to 24 - HEATING & AIR CONDITIONING/CONTROLS - FRONT/A/C PRESSURE TRANSDUCER - REMOVAL).

(6) If equipped, remove the nut that secures the A/C ground strap to the weld stud on the top of the right front strut tower (Fig. 7).

(7) If equipped, remove the A/C ground strap eyelet terminal connector from the weld stud.

(8) Remove the bolt that secures the liquid line rear section fitting to the top of the receiver/drier.

(9) Disconnect the liquid line fitting from the receiver/drier outlet port.

(10) Remove the O-ring seal from the liquid line fitting and discard.

(11) Install plugs in, or tape over the opened liquid line fitting and the receiver/drier outlet port.

(12) Remove the nut that secures the suction line and liquid line fittings to the expansion valve.

(13) Disconnect the suction line and liquid line fittings from the expansion valve.

(14) Remove the seals from the suction line and liquid line fittings and discard.

(15) Install plugs in, or tape over the opened suction line and liquid line fittings and both expansion valve ports.

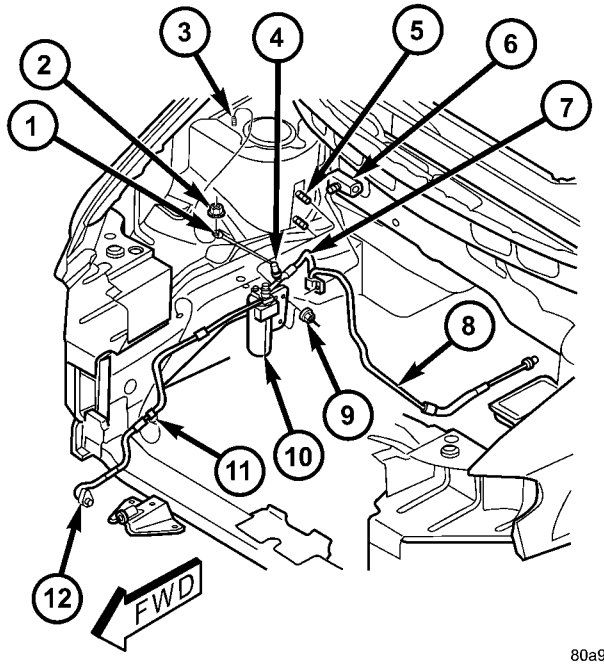

Fig. 7 Liquid Line

1 - A/C GROUND STRAP (IF EQUIPPED)
2 - NUT (IF EQUIPPED)
3 - WELD STUD (IF EQUIPPED)
4 - A/C PRESSURE TRANSDUCER
5 - WELD STUD (2)
6 - A/C EXPANSION VALVE
7 - A/C LIQUID LINE (REAR SECTION)
8 - LIQUID LINE EXTENSION (REAR A/C ONLY)
9 - NUT (2)
10 - RECEIVER/DRIER
11 - ROUTING CLIP
12 - A/C LIQUID LINE (FRONT SECTION)

(16) Raise and support the vehicle.

LIQUID LINE (Continued)

(17) Cut the tie strap located just forward of the connections between the underbody plumbing and the engine compartment plumbing for the rear heater-A/C system (Fig. 8).

(18) Disconnect the front liquid line extension fitting from the underbody liquid line fitting for the rear air conditioner.

(19) Remove the O-ring seal from the underbody liquid line fitting and discard.

(20) Install plugs in, or tape over the opened liquid line fittings.

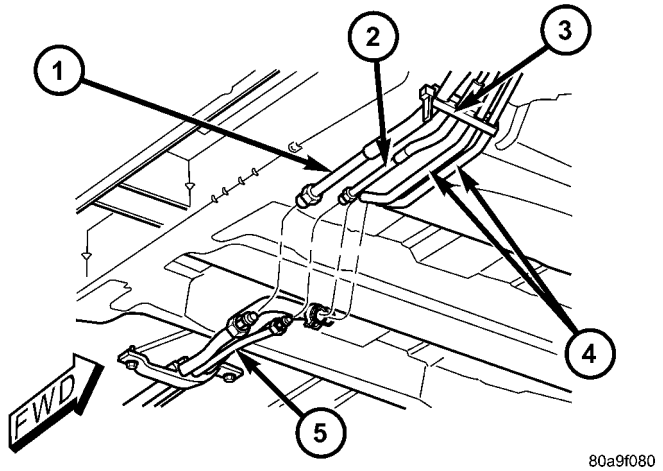

Fig. 8 Underbody A/C Line Front Connections – Typical

1 - SUCTION LINE EXTENSION TUBE
2 - LIQUID LINE EXTENSION TUBE
3 - RETAINING STRAP
4 - REAR HEATER EXTENSION TUBES
5 - UNDERBODY REFRIGERANT LINES

(21) Lower the vehicle.

(22) Remove the liquid line from the engine compartment.

INSTALLATION

(1) Position the rear section of the front liquid line into the engine compartment.

(2) Remove the tape or plugs from the suction line and liquid line fittings and both expansion valve ports.

(3) Lubricate new rubber O-ring seals with clean refrigerant oil and install them on the suction line and liquid line fittings.

(4) Reconnect the liquid line and suction line fittings to the expansion valve.

(5) Install the nut that secures the suction line and liquid line fittings to the expansion valve. Tighten the nut to 23 N·m (17 ft. lbs.).

(6) Remove the tape or plugs from the liquid line rear section fitting for the receiver/drier and the receiver/drier outlet port.

(7) Lubricate a new rubber O-ring seal with clean refrigerant oil and install it on the liquid line fitting.

(8) Reconnect the liquid line fitting to the receiver/drier outlet port on the top of the receiver/drier.

(9) Install the bolt that secures the liquid line fitting to the receiver/drier. Tighten the bolt to 11 N·m (97 in. lbs.).

(10) If equipped, reinstall the A/C ground strap eyelet terminal connector onto the weld stud on the top of the right front strut tower (if equipped).

(11) If equipped, install the nut that secures the A/C ground strap to the weld stud. Tighten the nut to 12 N·m (106 in. lbs.)

(12) Install the A/C pressure transducer (Refer to 24 - HEATING & AIR CONDITIONING/CONTROLS/A/C PRESSURE TRANSDUCER - INSTALLATION).

(13) Reconnect the drain tube to the wiper module drain on the right side of the engine compartment.

(14) Reinstall the air cleaner housing into the right side of the engine compartment.

(15) Raise and support the vehicle.

(16) Remove the tape or plugs from the liquid line rear section extension fitting and the underbody liquid line fitting.

(17) Lubricate a new rubber O-ring seal with clean refrigerant oil and install it on the underbody liquid line fitting.

(18) Reconnect the liquid line rear section extension fitting to the underbody liquid line fitting. Tighten the fittings to 23 N·m (17 ft. lbs.).

(19) Install a new tie strap just forward of the connections between the underbody plumbing and the engine compartment plumbing for the rear heater-A/C system.

(20) Lower the vehicle.

(21) Reconnect the battery negative cable.

(22) Evacuate the refrigerant system (Refer to 24 - HEATING & AIR CONDITIONING/PLUMBING - FRONT/REFRIGERANT - STANDARD PROCEDURE - REFRIGERANT SYSTEM EVACUATE).

(23) Charge the refrigerant system (Refer to 24 - HEATING & AIR CONDITIONING/PLUMBING - FRONT/REFRIGERANT - STANDARD PROCEDURE - REFRIGERANT SYSTEM CHARGE).

SUCTION LINE

REMOVAL

On models equipped with the optional rear A/C system, the front air conditioner suction line also includes a suction line hose and tube extension that connects the front suction line to the underbody suction line for the rear A/C system.

SUCTION LINE (Continued)

WARNING: REFER TO THE APPLICABLE WARNINGS AND CAUTIONS FOR THIS SYSTEM BEFORE PERFORMING THE FOLLOWING OPERATION (Refer to 24 - HEATING & AIR CONDITIONING/PLUMBING - FRONT - WARNING - A/C PLUMBING) and (Refer to 24 - HEATING & AIR CONDITIONING/PLUMBING - FRONT - CAUTION - A/C PLUMBING).

(1) Recover the refrigerant from the refrigerant system (Refer to 24 - HEATING & AIR CONDITIONING/PLUMBING - FRONT/REFRIGERANT - STANDARD PROCEDURE - REFRIGERANT RECOVERY).

(2) Disconnect and isolate the battery negative cable.

(3) Remove the air cleaner top cover and snorkel from the air cleaner housing located on the right side of the engine compartment.

(4) Disconnect the drain tube from the wiper module drain on the right side of the engine compartment.

(5) Remove the nut that secures the suction line fitting to the top of the compressor.

(6) Disconnect the suction line fitting from the compressor suction port.

(7) Remove the seal from the suction line fitting and discard.

(8) Install plugs in, or tape over the opened suction line fitting and the compressor suction port.

(9) Disengage the retainer that secures the suction line routing clip to the receiver/drier mounting bracket on the side of the right front strut tower in the engine compartment (Fig. 9).

(10) Remove the nut that secures the suction line and liquid line fittings to the front expansion valve.

(11) Disconnect the suction line and liquid line fittings from the front expansion valve.

(12) Remove the O-ring seals from the suction line and liquid line fittings and discard.

(13) Install plugs in, or tape over the opened suction line and liquid line fittings and both expansion valve ports.

(14) Raise and support the vehicle.

(15) Cut the tie strap located just forward of the connections between the underbody plumbing and the engine compartment plumbing for the rear heater and air conditioner (Fig. 10).

(16) Disconnect the suction line extension fitting from the underbody suction line fitting for the rear air conditioner.

(17) Remove the O-ring seal from the underbody suction line fitting and discard.

(18) Install plugs in, or tape over the opened suction line fittings.

(19) Lower the vehicle.

(20) Remove the suction line from the engine compartment.

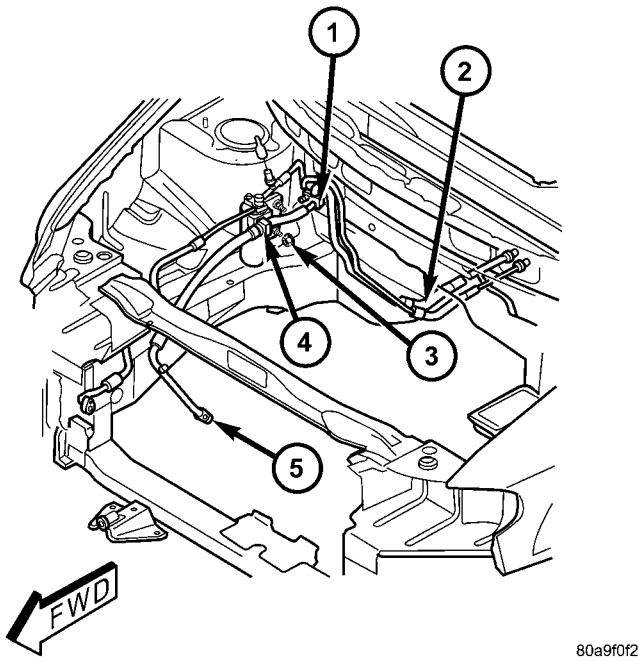

Fig. 9 Suction Line

1 - A/C EXPANSION VALVE
2 - SUCTION LINE EXTENSION (REAR A/C ONLY)
3 - NUT
4 - RETAINING CLIP
5 - SUCTION LINE

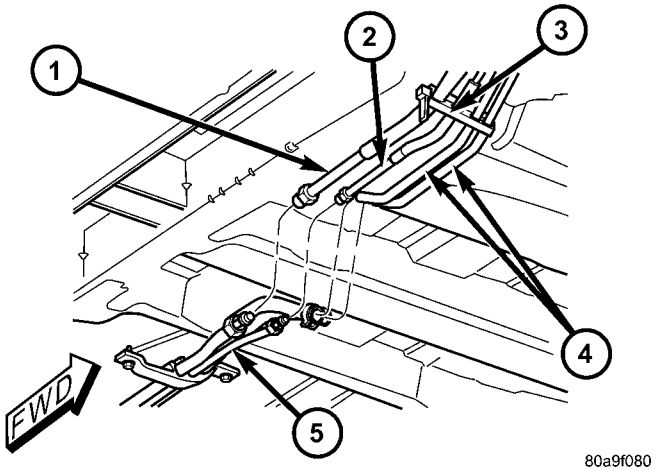

Fig. 10 Underbody Line Connections

1 - SUCTION LINE EXTENSION TUBE
2 - LIQUID LINE EXTENSION TUBE
3 - RETAINING STRAP
4 - REAR HEATER EXTENSION TUBES
5 - UNDERBODY REFRIGERANT LINES

INSTALLATION

(1) Position the suction line into the engine compartment.

(2) Remove the tape or plugs from the suction line and liquid line fittings and both expansion valve ports.

SUCTION LINE (Continued)

(3) Lubricate new rubber O-ring seals with clean refrigerant oil and install them on the suction line and liquid line fittings.

(4) Reconnect the liquid line and suction line fittings to the expansion valve.

(5) Install the nut that secures the suction line and liquid line fittings to the front expansion valve. Tighten the nut to 23 N·m (17 ft. lbs.).

(6) Engage the retainer that secures the suction line routing clip to the receiver/drier mounting bracket on the side of the right front strut tower in the engine compartment.

(7) Remove the tape or plugs from the compressor suction port and the suction line fitting.

(8) Lubricate a new rubber O-ring seal with clean refrigerant oil and install it on the suction line fitting.

(9) Reconnect the suction line fitting to the compressor suction port.

(10) Install the nut that secures the suction line fitting to the A/C compressor. Tighten the nut to 23 N·m (17 ft. lbs.).

(11) Reconnect the drain tube to the wiper module drain on the right side of the engine compartment.

(12) Reinstall the air cleaner top cover and snorkel onto the air cleaner housing located on the right side of the engine compartment.

(13) Reconnect the battery negative cable.

(14) Raise and support the vehicle.

(15) Remove the tape or plugs from the suction line extension fitting and the underbody suction line fitting.

(16) Lubricate a new rubber O-ring seal with clean refrigerant oil and install it on the underbody suction line fitting.

(17) Reconnect the suction line extension fitting to the underbody suction line fitting. Tighten the fitting to 23 N·m (17 ft. lbs.).

(18) Install a new tie strap just forward of the connections between the underbody plumbing and the engine compartment plumbing for the rear heater and air conditioner.

(19) Lower the vehicle.

(20) Evacuate the refrigerant system (Refer to 24 - HEATING & AIR CONDITIONING/PLUMBING - FRONT/REFRIGERANT - STANDARD PROCEDURE - REFRIGERANT SYSTEM EVACUATE).

(21) Charge the refrigerant system (Refer to 24 - HEATING & AIR CONDITIONING/PLUMBING - FRONT/REFRIGERANT - STANDARD PROCEDURE - REFRIGERANT SYSTEM CHARGE).

UNDERBODY LINES

DESCRIPTION

The underbody heater-A/C plumbing is used only on models with the optional rear heater-A/C system (Fig. 11). The underbody suction line, liquid line, and heater tubes can each be serviced separately.

OPERATION

The rear heater and A/C lines are all serviced as individual components. When disconnecting any lines or connections, make sure that the area around the line or connection is clean of any dirt or residue that may enter and contaminate the rear heating-A/C system (Fig. 12) and (Fig. 13).

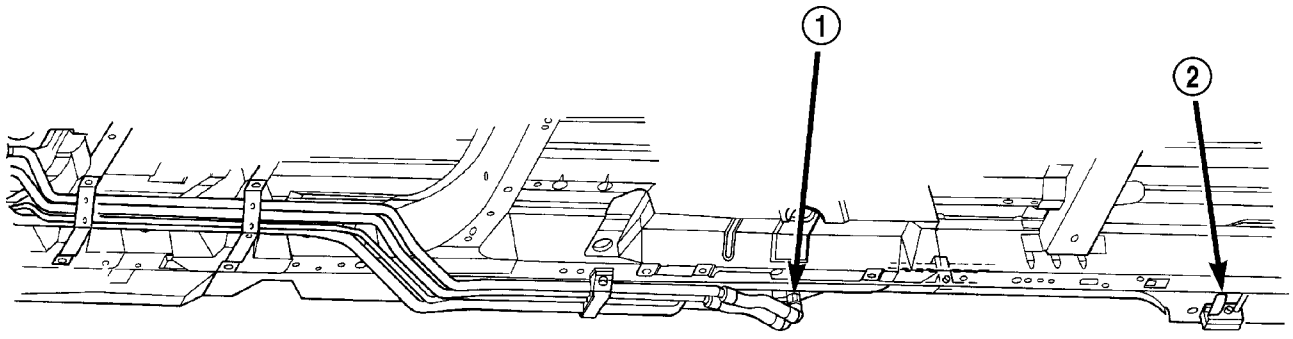

Fig. 11 Rear Heater and A/C Lines – Typical

1 - REAR HEATER TUBE CONNECTIONS
2 - REAR A/C LINE CONNECTIONS

UNDERBODY LINES (Continued)

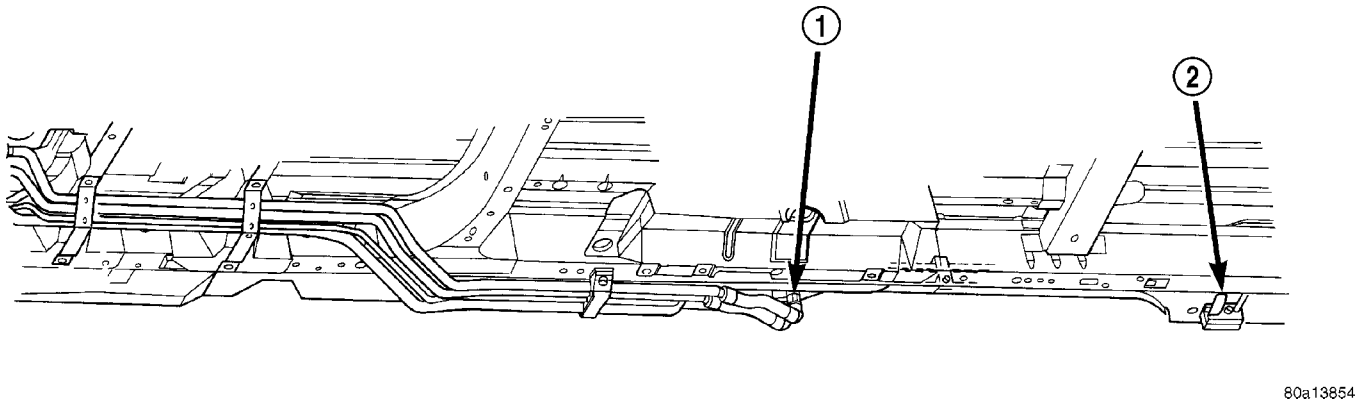

Fig. 12 Rear Heater and A/C Lines – Typical

1 - REAR HEATER TUBE CONNECTIONS
2 - REAR A/C LINE CONNECTIONS

WARNING: HIGH PRESSURES ARE PRODUCED IN THE REFRIGERANT SYSTEM WHEN THE A/C COMPRESSOR IS OPERATING. HIGH TEMPERATURE COOLANT IS PRESENT IN THE HEATER PLUMBING WHEN THE ENGINE IS OPERATING. EXTREME CARE MUST BE EXERCISED WHEN SERVICING THE REAR HEATER AND A/C LINES TO PREVENT POSSIBLE PERSONAL INJURY.

Any kinks or sharp bends in the rear heater-A/C plumbing will reduce the capacity of the entire heating-A/C system. Kinks and sharp bends reduce the system flow. High pressures are produced in the refrigerant system when the A/C compressor is operating. High temperature coolant is present in the heater plumbing when the engine is operating. Extreme care must be exercised to make sure that each of the connections is pressure-tight and leak free.

REMOVAL

UNDERBODY HEATER TUBES

WARNING: REFER TO THE APPLICABLE WARNINGS AND CAUTIONS FOR THIS SYSTEM BEFORE PERFORMING THE FOLLOWING OPERATION (Refer to 24 - HEATING & AIR CONDITIONING/PLUMBING - WARNING).

(1) Drain the engine cooling system (Refer to 7 - COOLING - STANDARD PROCEDURE - COOLING SYSTEM DRAIN).

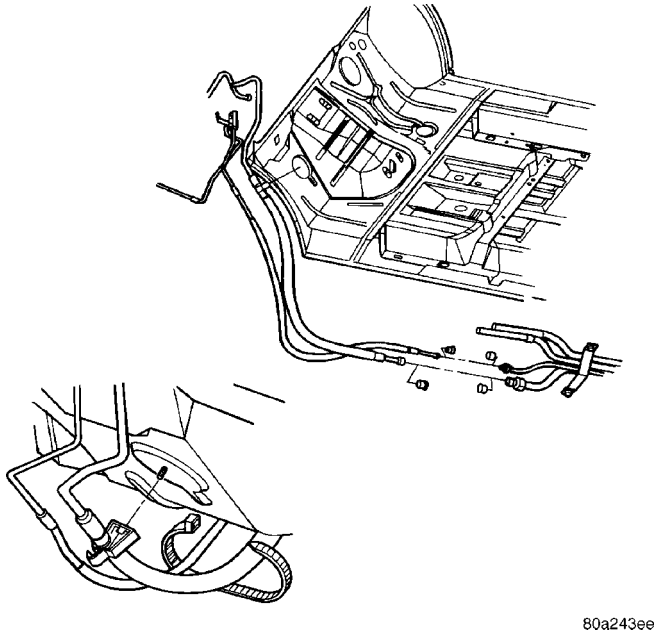

Fig. 13 Front Extension Lines to Underbody Lines – Typical

(2) Raise and support vehicle.

(3) Disconnect the underbody heater tubes at the rear of the vehicle by releasing the insert in the underbody heater tube quick connect fittings and carefully pulling downward on the heater tube fittings (Fig. 14).

(4) Lower the underbody heater tubes and drain any residual coolant from the tubes into a suitable container.

UNDERBODY LINES (Continued)

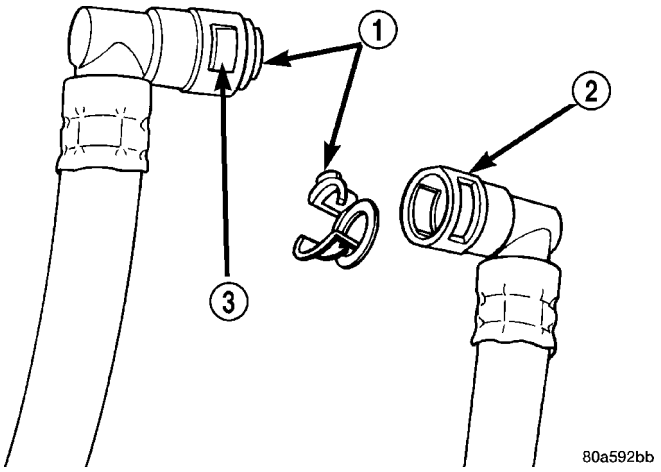

Fig. 14 Underbody Heater Tube Quick Connect Fittings

1 - INSERT
2 - QUICK CONNECT FITTING
3 - COMPRESS INSERT FOR REMOVAL

(5) Using spring tension clamp pliers, compress and slide the clamps off of the rubber hoses at the front of the underbody heater tubes (Fig. 15).

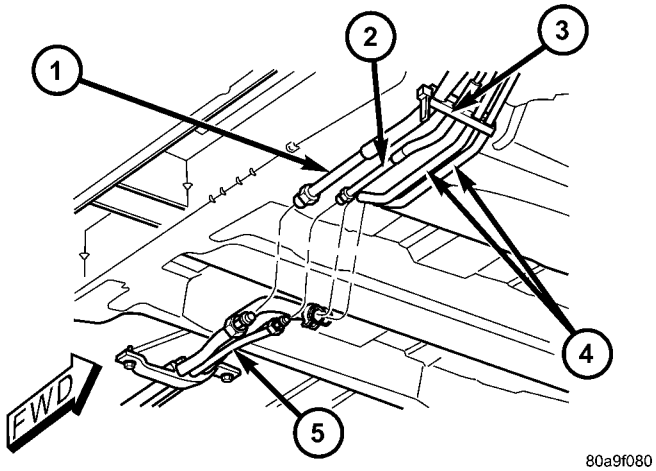

Fig. 15 Underbody Connections

1 - SUCTION LINE EXTENSION TUBE
2 - LIQUID LINE EXTENSION TUBE
3 - RETAINING STRAP
4 - REAR HEATER EXTENSION TUBES
5 - UNDERBODY REFRIGERANT LINES

CAUTION:
DO NOT apply excessive pressure on heater tubes or connections when removing heater hoses. Excessive pressure may damage or deform the tubes, causing an engine coolant leak.

(6) Disconnect the heater hoses by carefully twisting the hoses back and forth on the rear heater extension tubes, while gently pulling them away from the end of the tubes.

(7) If necessary, carefully cut the hose ends and peel the hoses off of the tubes.

NOTE:
Replacement of the heater hoses will be required if the hose ends are cut for removal.

(8) Remove the screws that secure the underbody line retaining straps to the vehicle underbody.

(9) Remove the underbody heater tubes from the retaining straps.

(10) Remove the underbody heater tubes from the vehicle.

UNDERBODY REFRIGERANT LINES

WARNING: REFER TO THE APPLICABLE WARNINGS AND CAUTIONS FOR THIS SYSTEM BEFORE PERFORMING THE FOLLOWING OPERATION (Refer to 24 - HEATING & AIR CONDITIONING/PLUMBING - FRONT - WARNING - A/C PLUMBING) and (Refer to 24 - HEATING & AIR CONDITIONING/PLUMBING - FRONT - CAUTION - A/C PLUMBING).

(1) Recover the refrigerant from the refrigerant system (Refer to 24 - HEATING & AIR CONDITIONING/PLUMBING - FRONT - STANDARD PROCEDURE - REFRIGERANT RECOVERY).

(2) Raise and support vehicle.

(3) Disconnect the exhaust system from the exhaust hanger rubber isolators and position the exhaust system out of the way (Refer to 11 - EXHAUST SYSTEM - DESCRIPTION).

(4) Disconnect the underbody refrigerant lines from the front liquid and suction line extension tubes and remove and discard the O-ring seals. (Fig. 16).

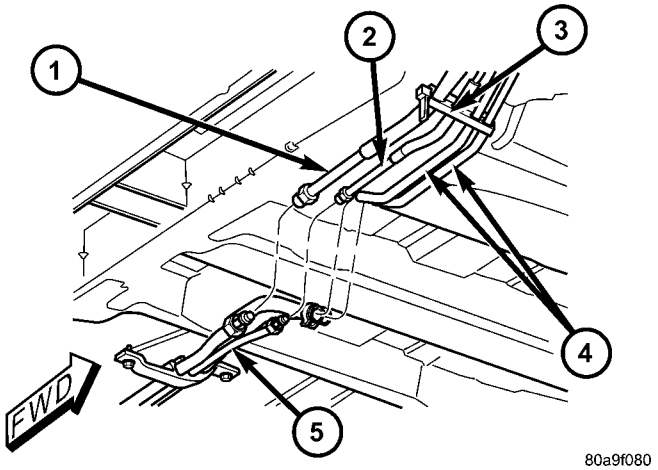

Fig. 16 Underbody A/C Line Front Connections – Typical

1 - SUCTION LINE EXTENSION TUBE
2 - LIQUID LINE EXTENSION TUBE
3 - RETAINING STRAP
4 - REAR HEATER EXTENSION TUBES
5 - UNDERBODY REFRIGERANT LINES

UNDERBODY LINES (Continued)

(5) Install plugs in, or tape over the opened refrigerant line fittings.

(6) Remove the screws that secure the underbody line retaining straps to the vehicle underbody.

(7) Remove the underbody refrigerant lines from the retaining straps.

(8) Remove the bolt or nut (depending on application) that secures the underbody refrigerant lines to the rear evaporator extension line tapping plate, located behind the right rear wheel housing (Fig. 17) and (Fig. 18).

(9) Disconnect the underbody refrigerant lines from the rear evaporator extension line tapping plate and remove and discard the O-ring seals.

(10) Install plugs in, or tape over the opened underbody refrigerant line fittings and the rear evaporator extension line ports.

(11) Remove the underbody refrigerant lines from the vehicle.

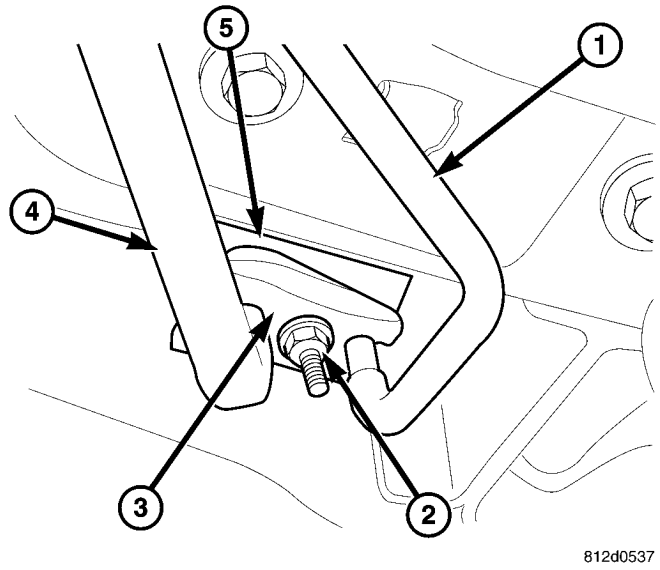

Fig. 17 Underbody A/C Line Rear Connections – with New Seating Element

1 - UNDERBODY LIQUID LINE
2 - NUT
3 - SEALING PLATE
4 - UNDERBODY SUCTION LINE
5 - EXTENSION LINE TAPPING PLATE

(12) If required, place the underbody refrigerant lines on a workbench, remove the nylon wedges that secure the underbody refrigerant lines to the underbody refrigerant line sealing plate and remove the lines from the sealing plate. (Fig. 19).

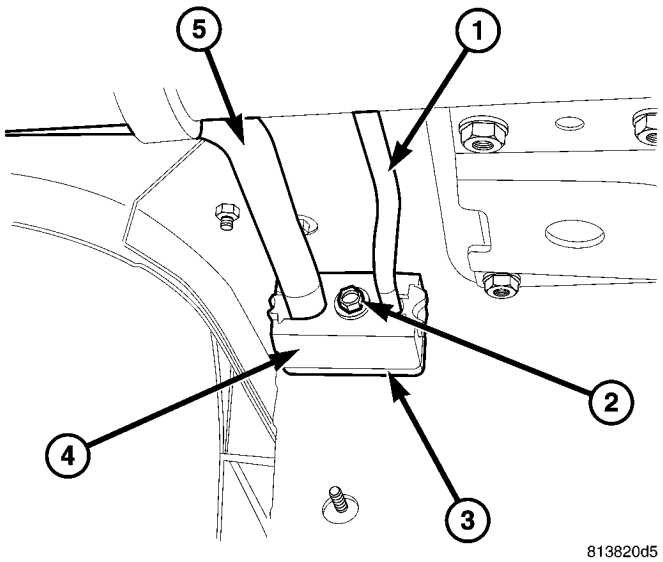

Fig. 18 Underbody A/C Line Rear Connections – without New Seating Element

1 - UNDERBODY LIQUID LINE
2 - BOLT
3 - EXTENSION LINE TAPPING PLATE
4 - UNDERBODY SUCTION LINE
5 - SEALING PLATE

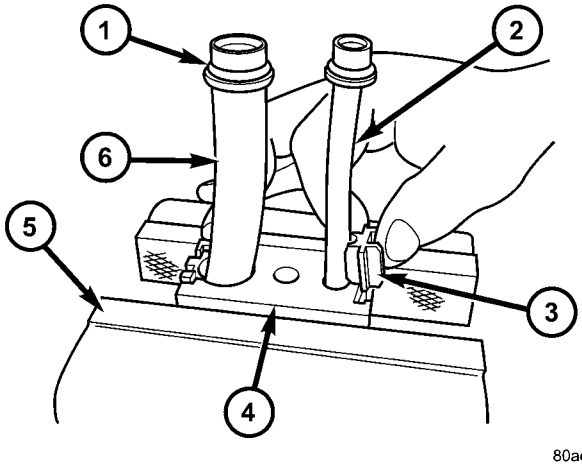

Fig. 19 Underbody A/C Line Sealing Plate – Typical

1 - O-RING (2)
2 - UNDERBODY LIQUID LINE
3 - NYLON WEDGE (2)
4 - SEALING PLATE
5 - VISE
6 - UNDERBODY SUCTION LINE

UNDERBODY LINES (Continued)

INSTALLATION

UNDERBODY HEATER TUBES

(1) Position the underbody heater tubes onto the vehicle underbody.

(2) Install the underbody heater tubes into the underbody line retaining straps.

(3) Install the bolts that secure the retaining straps to the vehicle underbody. Tighten the screws securely.

(4) Connect the rubber hoses at the front of the underbody heater tubes to the rear heater extension tubes.

(5) Using spring tension clamp pliers, compress and slide the clamps that secure the heater hoses over the extension tubes. Release the clamp when it is correctly positioned over the tube.

(6) Connect the rear underbody heater tube quick connections to the rear heater core extension tubes.

(7) Lower the vehicle.

(8) Refill the engine cooling system (Refer to 7 - COOLING - STANDARD PROCEDURE - COOLING SYSTEM REFILL).

UNDERBODY REFRIGERANT LINES

(1) If removed, install the underbody refigerant lines into the underbody refrigerant line sealing plate and install the nylon wedges that secure the refrigerant lines to the sealing plate.

(2) Position the underbody refrigerant lines onto the vehicle underbody.

(3) Install the underbody refrigerant lines into the underbody line retaining straps.

(4) Install the bolts that secure the retaining straps to the vehicle underbody. Tighten the screws securely.

(5) Remove the tape or plugs from the rear underbody refrigerant line fittings and the rear evaporator extension line ports.

(6) Lubricate new rubber O-ring seals with clean refrigerant oil and install them onto the underbody refrigerant line fittings.

(7) Connect the underbody refrigerant lines to the rear evaporator extension line tapping plate.

(8) Install the bolt or nut (depending on application) that secures the underbody refrigerant line sealing plate to the rear evaporator extension line tapping plate. Tighten the bolt or nut to 23 N·m (17 ft. lbs.).

(9) Remove the tape or plugs from the front liquid and suction line extension tubes and the underbody refrigerant line fittings.

(10) Lubricate new rubber O-ring seals with clean refrigerant oil and install them onto the underbody refrigerant line fittings.

(11) Connect the underbody refrigerant line fittings to the front liquid and suction line extension tubes. Tighten the fittings to 23 N·m (17 ft. lbs.).

(12) Position the exhaust system and install it to the exhaust hanger rubber isolators (Refer to 11 - EXHAUST SYSTEM - DESCRIPTION).

(13) Lower the vehicle.

(14) Evacuate the refrigerant system (Refer to 24 - HEATING & AIR CONDITIONING/PLUMBING - FRONT - STANDARD PROCEDURE - REFRIGERANT SYSTEM EVACUATE).

(15) Charge the refrigerant system (Refer to 24 - HEATING & AIR CONDITIONING/PLUMBING - FRONT - STANDARD PROCEDURE - REFRIGERANT SYSTEM CHARGE).

CABIN HEATER

TABLE OF CONTENTS

page

CABIN HEATER
DESCRIPTION 113
OPERATION
MANUAL TEMPERATURE CONTROL SYSTEM 113
AUTOMATIC TEMPERATURE CONTROL SYSTEM 114
WARNING 114
DIAGNOSIS AND TESTING
SUPPLEMENTAL CABIN HEATER 114
AIR INTAKE PIPE
REMOVAL 115
INSTALLATION 115
EXHAUST TUBE
REMOVAL 116
INSTALLATION 116
FUEL DOSING PUMP
DESCRIPTION 117
OPERATION 117
REMOVAL 117
INSTALLATION 117
FUEL LINE
STANDARD PROCEDURE
CLEANING 118
REMOVAL 118
INSTALLATION 118
HEATER HOSES
REMOVAL 119
INSTALLATION 119
HEATER PIPES
REMOVAL 119
INSTALLATION 120
HEATER UNIT
REMOVAL 121
INSTALLATION 122
HEATER WIRING
REMOVAL 122
INSTALLATION 122

CABIN HEATER

DESCRIPTION

Vehicles equipped with the diesel engine are also equipped with a supplemental cabin heater. This cabin heater is mounted under the vehicle and operates similar to an oil fired furnace. The heater burns small amounts of fuel to provide additional heat to the coolant. Coolant is routed from the engine, to the supplemental cabin heater and then to the front heater core. This provides additional heat to the passenger compartment. The supplemental cabin heater system is interfaced to the vehicles on-board computer systems and DRBIII® diagnostics.

The supplemental cabin heater has an electronic control module that monitors the heat output of the heater. The cabin heater operates at full load (5 kW), half load or idle mode (no additional heat) depending on engine coolant temperature.

When ambient temperatures are lower than 15° C (60° F), the supplemental cabin heater automatically operates once each ignition cycle for five minutes. This assures a good fuel supply is always present for the supplemental cabin heater.

OPERATION

MANUAL TEMPERATURE CONTROL SYSTEM

The supplemental cabin heater is activated via the temperature slide control or knob on the A/C-heater control when equipped with the manual temperature control (MTC) system. If the slide control or knob is moved to or above the upper set point the cabin heater is activated. The cabin heater can operate in a full or partial load range as well as an idle mode all dependent on the engine coolant temperature. The cabin heater will also turn off if the A/C-heater temperature control is lowered to less than the lower set point. The cabin heater can take up to three minutes to completely shut down when either the heater temperature is set below the lower set point or the vehicle ignition is shut down.

NOTE: Do not apply a strong vacuum source such as a garage ventilation system directly on the supplemental cabin heater exhaust line. Too strong of a vacuum can prevent the supplemental cabin heater from starting. If required, place the vacuum source at least 75 mm (3 in.) away from the exhaust line.

CABIN HEATER (Continued)

The supplemental cabin heater only operates when the engine is running, the mileage exceeds 8 kilometer (5 mph) and the fuel tank volume exceeds 1/8 of a tank. The supplemental heater control module monitors blower speed and combustion during its start-up. The cabin heater should operate if the coolant temperature is below 40° C (104° F).

AUTOMATIC TEMPERATURE CONTROL SYSTEM

The automatic temperature control (ATC) system will activate the supplemental cabin heater based on engine coolant temperature and interior component settings. The cabin heater can operate in a full or partial load range as well as an idle mode all dependent on the engine coolant temperature. The cabin heater will also turn off if the A/C-heater temperature control is lowered to less than the lower set point. The cabin heater can take up to three minutes to completely shut down when either the heater temperature is set below the lower set point or the vehicle ignition is shut down.

NOTE: Do not apply a strong vacuum source such as a garage ventilation system directly on the supplemental cabin heater exhaust line. Too strong of a vacuum can prevent the supplemental cabin heater from starting. If required, place the vacuum source at least 75 mm (3 in.) away from the exhaust line.

The supplemental cabin heater only operates when the engine is running, the mileage exceeds 8 kilometer (5 mph) and the fuel tank volume exceeds 1/8 of a tank. The supplemental heater control module monitors blower speed and combustion during its start-up. The cabin heater should operate if the coolant temperature is below 40° C (104° F).

WARNING

WARNING: DO NOT OPERATE THE DIESEL SUPPLEMENTAL CABIN HEATER IN AN ENCLOSED AREA SUCH AS A GARAGE THAT DOES NOT HAVE EXHAUST VENTILATION FACILITIES. ALWAYS VENT THE CABIN HEATER EXHAUST WHEN OPERATING THE CABIN HEATER. ALLOW THE DIESEL SUPPLEMENTAL CABIN HEATER TO COOL BEFORE PERFORMING ANY SERVICE PROCEDURES TO THE CABIN HEATER. VERIFY THAT ALL DIESEL SUPPLEMENTAL CABIN HEATER FUEL LINES ARE SECURELY FASTENED TO THEIR RESPECTIVE COMPONENTS BEFORE PERFORMING ANY SERVICE PROCEDURES TO THE CABIN HEATER. FAILURE TO FOLLOW THESE INSTRUCTION MAY RESULT IN PERSONAL INJURY OR DEATH.

DIAGNOSIS AND TESTING

SUPPLEMENTAL CABIN HEATER

Refer to the Symptoms Diagnosis table for basic checks of the diesel fueled supplemental cabin heater.

SYMPTOMS DIAGNOSIS

Symptom	Possible Causes
Smell of diesel fuel.	Check cabin heater system integration in vehicle's fuel system. Check fuel lines for leakage, kinks or obstructions. If OK, Inspect the inlet muffler, drain as necessary. Re-test the cabin heater and re-inspect. Inspect the exhaust tube and cabin heater for the presence of external fuel. If presence of external fuel is observed on the heater unit or in the exhaust tube or after draining and testing. Remove the cabin heater from vehicle and repair or replace components as required.
Heater does not achieve full load operation.	Check cabin heater operation with DRBIII® scan tool and replace components as required.
Continuous white smoke from heater exhaust during combustion operation.	Check cabin heater operation with DRBIII® scan tool and replace components as required. White smoke is typical in extreme weather conditions.
Heater can not be switched off.	Check cabin heater operation with DRBIII® scan tool and replace components as required.
Heater does not operate.	Diagnosis cabin heater control module using the DRBIII® scan tool and the procedures listed in Vehicle Performance under Cabin Heater Diagnosis in Group 18.

CABIN HEATER (Continued)

Symptom	Possible Causes
Loss of coolant (Leakage) or heater develops smoke during combustion operation and exhaust has an extremely sweet smell.	Inspect coolant hoses for leakage, kinks or loose hose connection. Inspect the exhaust tube assembly for continuous flow, if OK there is an internal heater leak and cabin heater should be inspected and components should be replaced as required.
Loss of fuel (dripping).	Check cabin heater system integration in vehicles fuel system. Check fuel line connection for leakage. If OK there is an internal leak and cabin heater should be inspected and replaced as required.

AIR INTAKE PIPE

REMOVAL

NOTE: The air intake tube for the supplemental cabin heater is part of an assembly that includes the heater cooling intake and return pipes. If the cabin heater air intake tube requires removal or replacement the entire cabin heater assembly will require removal or replacement.

(1) Drain the engine cooling system (Refer to 7 - COOLING - STANDARD PROCEDURE).

(2) Remove clamps from the cabin heater tubes at the lower heater port and the lower EGR connector which are located under the hood.

(3) Remove the retaining clamp at the cabin heater air intake muffler connection (Refer to 24 - HEATING & AIR CONDITIONING/CABIN HEATER/INLET MUFFLER - REMOVAL).

(4) Remove the clamp at the flexible tube to steel tube connection (Fig. 1).

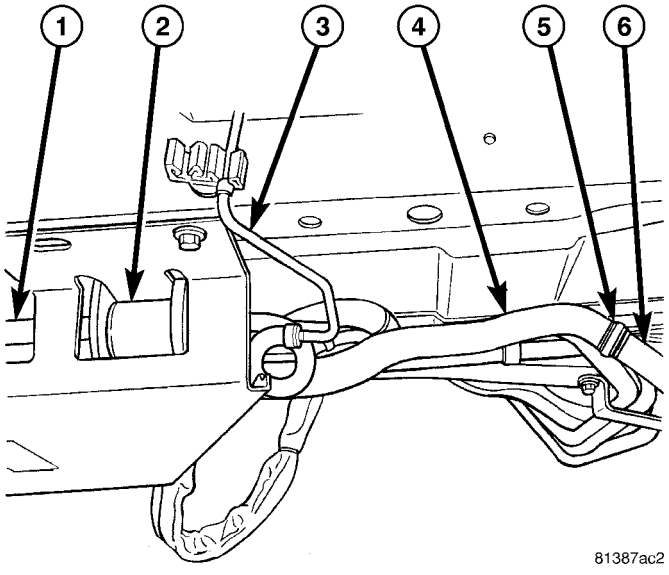

Fig. 1 Flexible Air Intake Line

1 - CABIN HEATER AND SPLASH SHIELD
2 - DOSING PUMP
3 - DOSING PUMP FUEL LINE
4 - FLEXIBLE AIR INTAKE LINE
5 - CLAMP
6 - STEEL INTAKE PIPE

(5) Remove the two retaining screws and remove pipe assembly (Fig. 2).

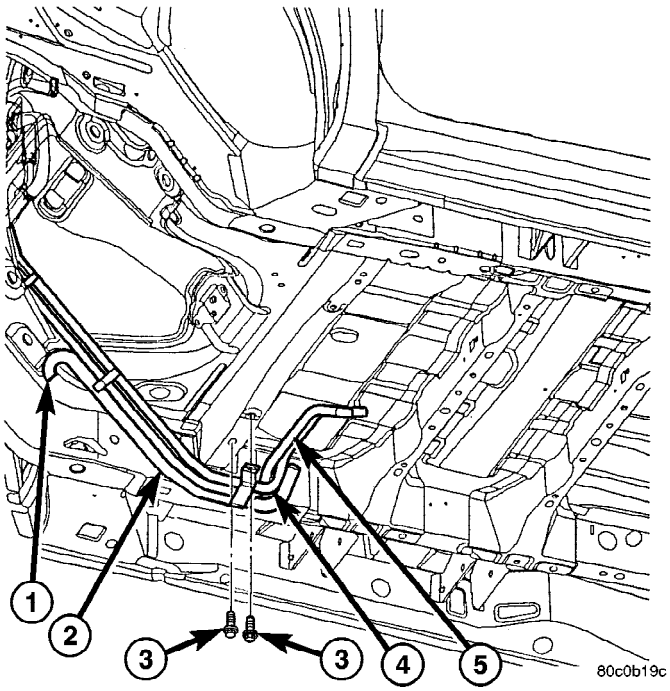

Fig. 2 Cabin Heater Air Intake And Heater Pipe Assembly

1 - INTAKE TUBE AIR INTAKE
2 - INTAKE PIPE
3 - RETAINING SCREWS
4 - INTAKE HEATER LINE
5 - RETURN HEATER LINE

INSTALLATION

(1) Install the air intake pipe assembly and install the two retaining screws. Tighten the screws to 7 N·m (62 in. lbs.).

(2) Attach the steel tube to the flexible tube and position and then tighten the retaining clamp securely.

(3) Install the flexible tube to the cabin heater air intake muffler and install and tighten the retaining clamp securely.

(4) Install the cabin heater tubes to the lower heater connection and the lower EGR cooler connection and tighten the retaining clamps.

(5) Lower the vehicle.

AIR INTAKE PIPE (Continued)

(6) Refill the engine cooling system (Refer to 7 - COOLING - STANDARD PROCEDURE).

(7) Verify function of the cabin heater.

EXHAUST TUBE

REMOVAL

WARNING: THERE IS A POTENTIAL DANGER OF SKIN BURNS AS THE SUPPLEMENTAL CABIN HEATER AND ITS COMPONENTS MAY BE VERY HOT. MAKE SURE THE CABIN HEATER IS ALLOWED TO COOL DOWN BEFORE ANY SERVICE WORK ON THE CABIN HEATER SYSTEM IS ATTEMPTED.

(1) Raise and support the vehicle. Take note of the location of the flexible section of the cabin heater exhaust tube.

(2) Remove the exhaust clamp at the flexible pipe and steel pipe connection (Fig. 3).

(3) Remove the clamp at the flexible pipe connection and the cabin heater housing (if required).

(4) Remove the three screws holding the exhaust pipe to the body.

(5) Remove the steel exhaust pipe from the vehicle.

(6) Remove the flexible exhaust pipe from the vehicle (if required).

INSTALLATION

(1) Install the flexible exhaust pipe to the cabin heater. Tighten the mounting clamp securely.

(2) Position the steel exhaust pipe to the flexible exhaust. Tighten the mounting clamp securely.

(3) Loosely install the three exhaust pipe screws and adjust pipe placement as required. Tighten the screws securely.

(4) Install the clamp that secures the steel exhaust pipe to the flexible exhaust pipe. Tighten the clamp securely.

(5) Check exhaust end placement of the exhaust pipe and make any final adjustments.

(6) Lower the vehicle.

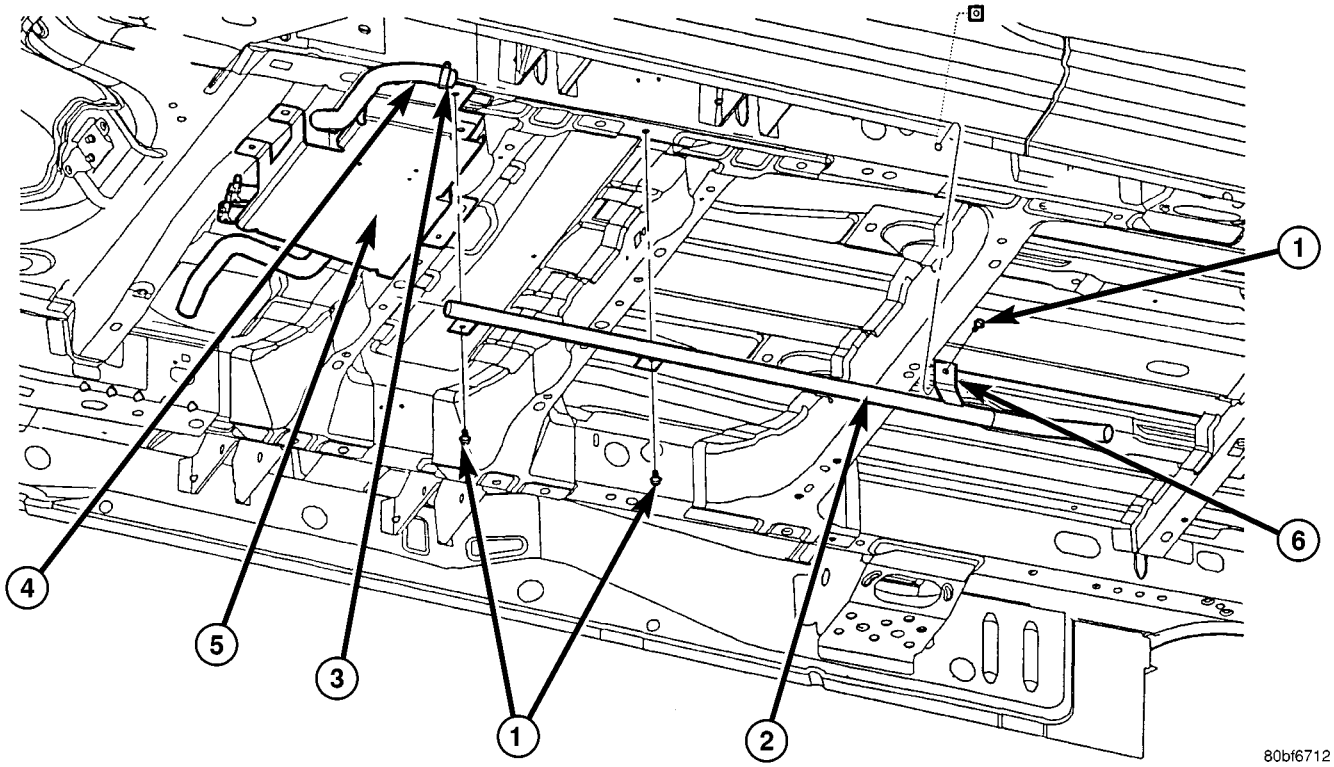

Fig. 3 Cabin Heater Exhaust System

1 - MOUNTING SCREWS (3)
2 - STEEL HEATER EXHAUST PIPE
3 - EXHAUST CLAMP (2)
4 - FLEXIBLE HEATER EXHAUST PIPE
5 - CABIN HEATER AND SHIELD
6 - EXHAUST PIPE MOUNTING CLIPS (3) (IF EQUIPPED)

FUEL DOSING PUMP

DESCRIPTION

The dosing pump is a combined delivery, dosing and shut-off system for the fuel supply to the supplemental cabin heater from the vehicle fuel tank.

OPERATION

The dosing pump is an electrically operated pump that receives its operation instructions from the supplemental cabin heater control module. The pump supplies diesel fuel from the vehicle fuel tank to the cabin heater.

REMOVAL

NOTE: The dosing pump is serviceable without removing the supplemental cabin heater from the vehicle.

(1) Disconnect and isolate the negative battery cable.

CAUTION: Make sure that the hoist is properly positioned under the vehicle to prevent damage to the flexible section of the cabin heater exhaust tube.

(2) Raise and support the vehicle.
(3) Disconnect the wiring harness connector to the dosing pump by depressing the integral spring and pulling the connector away from the pump.

NOTE: Utilize an approved fuel storage container to catch any residual fuel that may drain from the heater fuel hose or the dosing pump.

(4) Remove the clamp that secures the heater fuel hose to the dosing pump (Fig. 4).
(5) Disconnect the heater fuel hose from the dosing pump.

NOTE: Position and retain the heater fuel line to prevent fuel leakage from the cabin heater unit while servicing the dosing pump.

(6) Disconnect the fuel line between the dosing pump and the cabin heater unit.

NOTE: Have an approved fuel storage container ready to catch any residual fuel that may drain from the fuel line or the cabin heater unit.

(7) Remove the dosing pump from the rubber isolator and the vehicle.

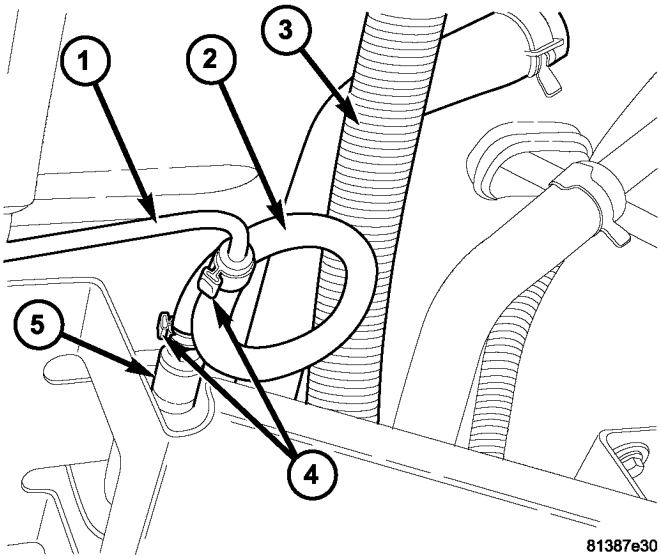

Fig. 4 Dosing Pump Fuel Line

1 - HEATER FUEL LINE
2 - HEATER FUEL HOSE
3 - HEATER AIR INTAKE PIPE
4 - RETAINING CLAMP (2)
5 - DOSING PUMP

INSTALLATION

(1) Position the dosing pump to the vehicle and onto the rubber isolator.
(2) Connect the fuel line between the dosing pump and the cabin heater unit.

NOTE: The connectors should point towards the cabin heater fuel line.

(3) Connect the heater fuel hose to the dosing pump.
(4) Install the clamp that secures the heater fuel hose to the dosing pump. Tighten the clamp securely.
(5) Connect the wire harness connector to the dosing pump by depressing the integral spring and pushing the connector toward the pump. Verify connector installation.
(6) Lower the vehicle
(7) Reconnect the negative battery cable.
(8) Verify function of the supplemental cabin heater.

FUEL LINE

STANDARD PROCEDURE

CLEANING

(1) Remove the cabin heater fuel line (Refer to 24 - HEATING & AIR CONDITIONING/CABIN HEATER/FUEL LINE - REMOVAL).

(2) With the cabin heater fuel line removed from the vehicle, place a shop cloth on the fuel tank end of the fuel line to catch any residue, then apply a small amount of air pressure to the other end of the fuel line.

(3) Check to see if air pressure is coming from the tank end of the line. If pressure is flowing unrestricted the line is clean.

(4) If the fuel line shows any signs of being restricted after air pressure is applied, the fuel line should be replaced.

(5) Install the cabin heater fuel line (Refer to 24 - HEATING & AIR CONDITIONING/CABIN HEATER/FUEL LINE - INSTALLATION).

(6) Verify function of the cabin heater.

REMOVAL

CAUTION: Make sure that the hoist is properly positioned under the vehicle to prevent damage to the flexible section of the cabin heater exhaust tube.

(1) Raise and support the vehicle.

NOTE: Utilize an approved fuel storage container to catch any residual fuel that may drain from the heater fuel hose or the dosing pump.

(2) Remove the two clamps that secure the heater fuel hose to the dosing pump and the heater fuel line (Fig. 5).

(3) Disconnect the heater fuel hose from the dosing pump and the heater fuel line.

(4) Remove the clamp that secures the heater fuel line to the fuel tank.

(5) Disconnect the heater fuel line from the fuel tank.

(6) Disconnect the fuel line from the body retaining clips and remove the fuel line from vehicle.

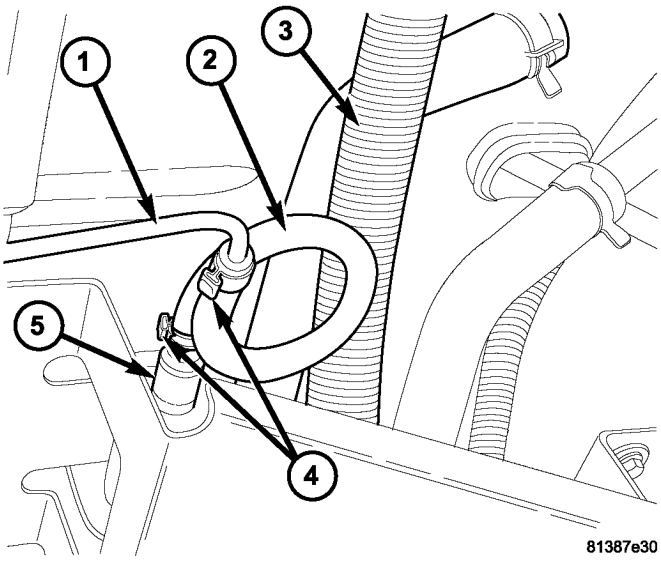

Fig. 5 Dosing Pump Fuel Line

1 - HEATER FUEL LINE
2 - HEATER FUEL HOSE
3 - HEATER AIR INTAKE PIPE
4 - RETAINING CLAMP (2)
5 - DOSING PUMP

INSTALLATION

WARNING: DO NOT OPERATE THE DIESEL SUPPLEMENTAL CABIN HEATER IN AN ENCLOSED AREA SUCH AS A GARAGE THAT DOES NOT HAVE EXHAUST VENTILATION FACILITIES. ALWAYS VENT THE CABIN HEATER EXHAUST WHEN OPERATING THE CABIN HEATER. ALLOW THE DIESEL SUPPLEMENTAL CABIN HEATER TO COOL BEFORE PERFORMING ANY SERVICE PROCEDURES TO THE CABIN HEATER. VERIFY THAT ALL DIESEL SUPPLEMENTAL CABIN HEATER FUEL LINES ARE SECURELY FASTENED TO THEIR RESPECTIVE COMPONENTS BEFORE PERFORMING ANY SERVICE PROCEDURES TO THE CABIN HEATER. FAILURE TO FOLLOW THESE INSTRUCTIONS MAY RESULT IN PERSONAL INJURY OR DEATH.

(1) Position the cabin heater fuel line to the vehicle and connect the body retaining clips.

(2) Connect the heater fuel line to the fuel tank.

(3) Install the clamp that secure the heater fuel line to the fuel tank. Tighten the clamp securely.

(4) Connect the heater fuel hose to the dosing pump and the heater fuel line.

(5) Install the clamps that secure the heater fuel hose to the dosing pump and the heater fuel line. Tighten the clamps securely.

(6) Lower the vehicle.

FUEL LINE (Continued)

NOTE: Verify that there is more than 1/8 of a tank of fuel in the vehicle's fuel tank before performing this procedure. Add fuel, if necessary.

NOTE: Failure to prime the dosing pump after draining the supplemental cabin fuel line will prevent cabin heater activation during the first attempt to start the cabin heater. This will also set a diagnostic trouble code (DTC) in the cabin heater control's memory. Do not perform the Dosing Pump Priming procedure if an attempt was made to start the cabin heater without priming the dosing pump first. This will put excess fuel in the cabin heater and cause smoke to emit from the cabin heater exhaust pipe when cabin heater activation occurs.

(7) Connect the DRBIII® scan tool to the diagnostic link connector.
(8) Turn the ignition to the ON position.

NOTE: Do not activate the dosing pump prime more than one time. This will put excess fuel in the supplemental cabin heater and cause smoke to emit from the cabin heater exhaust pipe when cabin heater activation occurs.

NOTE: A clicking noise heard coming from the dosing pump indicates that the pump is operational.

(9) With the DRBIII® scan tool in Cabin Heater, select System Tests and Dosing Pump Prime. Allow the dosing pump to run for the full 45 second cycle time. When the 45 second cycle is complete, press Page Back on the DRBIII® scan tool key pad to exit the Dosing Pump Prime. The Dosing Pump Priming procedure is now complete.

HEATER HOSES

REMOVAL

(1) Raise and support the vehicle. Take note of the location of the flexible section of the cabin heater exhaust tube.
(2) Drain the engine cooling system (Refer to 7 - COOLING - STANDARD PROCEDURE).

NOTE: Complete removal of the supplemental cabin heater from vehicle is not required, lowering the cabin heater allows easier access to coolant line clamps.

(3) Lower the supplemental cabin heater from the vehicle (Refer to 24 - HEATING & AIR CONDITIONING/CABIN HEATER/HEATER UNIT - REMOVAL).
(4) Remove the clamps from both flexible coolant line ends.

NOTE: It is recommended that both flexible cabin heater coolant lines be replaced if either cabin heater coolant line is damaged.

(5) Remove both coolant lines from vehicle.

INSTALLATION

(1) Install both flexible coolant lines to the supplemental cabin heater and install the clamps.
(2) Install the flexible coolant lines to the coolant pipes and install the clamps.
(3) Install the supplemental cabin heater into the vehicle (Refer to 24 - HEATING & AIR CONDITIONING/CABIN HEATER/HEATER UNIT - INSTALLATION).
(4) Lower the vehicle.
(5) Fill the engine cooling system (Refer to 7 - COOLING - STANDARD PROCEDURE).
(6) Verify operation of the supplemental cabin heater.

HEATER PIPES

REMOVAL

WARNING: ALLOW THE ENGINE COOLING SYSTEM TO COOL COMPLETELY BEFORE REMOVING RADIATOR CAP OR DRAINING THE ENGINE COOLING SYSTEM. PERSONAL INJURY MAY RESULT IF THE ENGINE COOLING SYSTEM IS OPENED WHILE ENGINE COOLANT IS HOT AND UNDER PRESSURE.

NOTE: Steel heater lines from engine compartment to the supplemental cabin heater are part of an assembly that includes the air intake pipe. If the cabin heater lines or air intake pipe require removal or replacement the entire cabin heater assembly will require removal or replacement.

(1) Drain the engine cooling system (Refer to 7 - COOLING - STANDARD PROCEDURE).
(2) Remove clamps from both the EGR cooler and the lower heater port. Separate hoses from the mating plumbing port (Fig. 6).

HEATER PIPES (Continued)

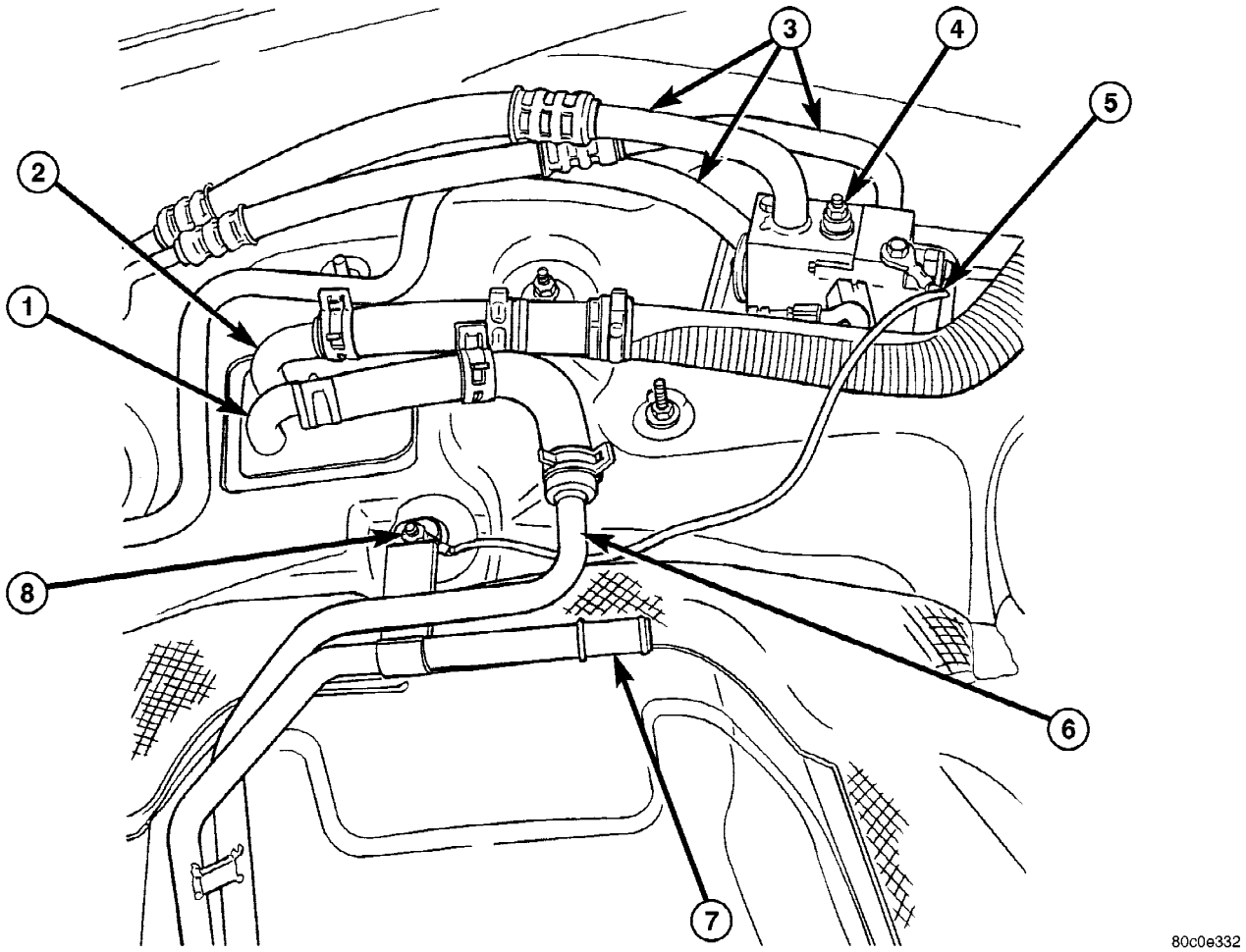

Fig. 6 Cabin Heater Pipes

1 - HEATER CORE INTAKE PIPE
2 - HEATER CORE RETURN PIPE
3 - A/C LINES
4 - A/C EXPANSION VALVE
5 - A/C EXPANSION VALVE GROUND WIRE
6 - CABIN HEATER RETURN PIPE
7 - CABIN HEATER INTAKE PIPE
8 - CABIN HEATER PIPES RETAINING NUT

(3) Remove retaining nut from heater line under hood bracket.

(4) Raise and support the vehicle. Take note of the location of the flexible section of the cabin heater exhaust tube.

(5) Remove the clamps from cabin heater lines to the rubber connection nearest the tubes. Separate the hoses from the tube assembly leaving the rubber hose attached to the cabin heater.

(6) Remove the cabin heater intake pipe from the heater unit (Refer to 24 - HEATING & AIR CONDITIONING/CABIN HEATER/INLET HOSE - REMOVAL) (Fig. 7).

(7) Remove heater pipe assembly retaining screws and remove assembly from vehicle.

INSTALLATION

(1) Position the heater pipe assembly and install the retaining screws.

(2) Install the heater unit intake pipe to the heater unit (Refer to 24 - HEATING & AIR CONDITIONING/CABIN HEATER/INLET HOSE - INSTALLATION).

(3) Connect heater hoses to the heater unit and tighten the clamps.

(4) Install heater unit intake pipe to heater unit (Refer to 24 - HEATING & AIR CONDITIONING/CABIN HEATER/INLET HOSE - INSTALLATION).

(5) Lower the vehicle.

(6) Install and tighten the retaining nut to the heater line under the hood bracket.

HEATER PIPES (Continued)

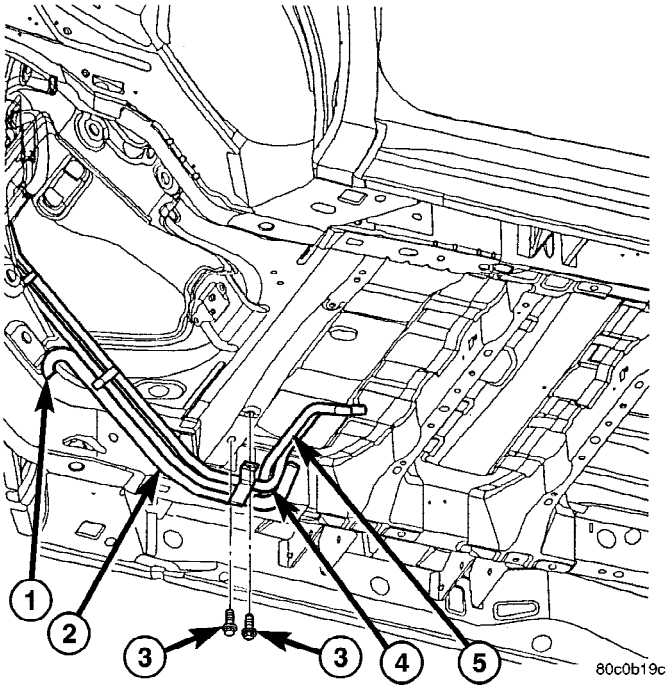

Fig. 7 Cabin Heater Air Intake And Heater Pipe Assembly

1 - INTAKE TUBE AIR INTAKE
2 - INTAKE PIPE
3 - RETAINING SCREWS
4 - INTAKE HEATER LINE
5 - RETURN HEATER LINE

(7) Connect the heater lines to the heater hoses at the heater core and EGR port. Position spring clamps onto the hoses.

(8) Fill the engine cooling system (Refer to 7 - COOLING - STANDARD PROCEDURE).

HEATER UNIT

REMOVAL

WARNING: DO NOT OPERATE THE DIESEL SUPPLEMENTAL CABIN HEATER IN AN ENCLOSED AREA SUCH AS A GARAGE THAT DOES NOT HAVE EXHAUST VENTILATION FACILITIES. ALWAYS VENT THE CABIN HEATER EXHAUST WHEN OPERATING THE CABIN HEATER. ALLOW THE DIESEL SUPPLEMENTAL CABIN HEATER TO COOL BEFORE PERFORMING ANY SERVICE PROCEDURES TO THE CABIN HEATER. VERIFY THAT ALL DIESEL SUPPLEMENTAL CABIN HEATER FUEL LINES ARE SECURELY FASTENED TO THEIR RESPECTIVE COMPONENTS BEFORE PERFORMING ANY SERVICE PROCEDURES TO THE CABIN HEATER. FAILURE TO FOLLOW THESE INSTRUCTION MAY RESULT IN PERSONAL INJURY OR DEATH.

(1) Raise and support the vehicle. Take note of the location of the flexible section of the cabin heater exhaust tube.

(2) Drain the engine cooling system (Refer to 7 - COOLING - STANDARD PROCEDURE).

(3) Carefully open one hose to the underbody tube assembly and drain the remaining coolant. A salvage hose is a good idea to control the residual coolant, as flow will occur from both the cabin heater and the hose and tube assemblies.

(4) Remove the second hose from the underbody hose and tube assembly.

(5) Loosen the hose and tube assembly from the toe-board crossmember at two locations.

(6) Disconnect the electrical connector from the body harness near the toe-board crossmember and rail.

(7) Remove the wiring harness from the toe-board crossmember (Refer to 24 - HEATING & AIR CONDITIONING/CABIN HEATER/HEATER UNIT - REMOVAL).

(8) Open the fuel filler cap. Disconnect the rubber fuel hose between the body tube assembly and the fuel pump nipple at the body tube joint. A minimal amount of fuel may flow from the open port.

NOTE: Utilize an approved fuel storage container to catch any residual fuel.

(9) Loosen the two fasteners at the rail. Take care to notice that the exhaust tube bracket tab is on top of the heater bracket and that there are two spacer washers installed between the rubber grommets.

(10) Remove the flexible section of the cabin heater exhaust tube from the exhaust tube by loosening the clamp. Remove the hose from the exhaust tube. Removal of the rail tube assembly may aid in this service operation (Refer to 24 - HEATING & AIR CONDITIONING/CABIN HEATER/EXHAUST TUBE - REMOVAL).

(11) Remove seat hex nut at the heater mounting flange to crossmember.

(12) Loosen the remaining fasteners which mount the exhaust tube assembly to the vehicle.

(a) Install a suitable support device under the cabin heater and secure the cabin heater to the support.

(13) Loosen the remaining three fasteners to the crossmembers.

(14) Remove the loosened fasteners that support the cabin heater while supporting the weight of the heater.

(15) Swing the cabin heater mounting bracket from between the exhaust bracket and rail mounting location. Drain any residual coolant from the cabin heater.

HEATER UNIT (Continued)

(16) Remove the cabin heater from the vehicle.

INSTALLATION

(1) Install the cabin heater mounting bracket between the exhaust bracket and the rail mounting location.

(2) Support the cabin heater and install the fasteners that secure the cabin heater to the mounting bracket.

(3) Install the three fasteners to the crossmembers. Tighten the M6 fasteners to 7 N·m (62 in. lbs.).

(4) Position the two spacer washers between the body and the rubber grommets for the two mounting points on the rail.

(5) Tighten the remaining M6 fasteners to 7 N·m (62 in. lbs.) and the M8 fasteners to 23 N·m (17 ft. lbs.) which mount the exhaust tube assembly to the vehicle.

(6) Install the seat hex nut at the heater mounting flange to the crossmembers. Tighten the nut to 60 N·m (44 ft. lbs.)

(7) Install the flexible section of the cabin heater exhaust tube to the exhaust tube. Tighten the M6 bolt of the clamp securley. Install the hose to the exhaust tube.

(8) Tighten the two M8 fasteners at the rail to 23 N·m (17 ft. lbs.). Taking care so that the exhaust tube bracket tab is on the top of the heater bracket.

(9) Install the wiring harness (Refer to 24 - HEATING & AIR CONDITIONING/CABIN HEATER/ HEATER UNIT - INSTALLATION).

(10) Tighten the hose and tube assembly to the toe-board crossmember at two locations.

(11) Install the second hose to the underbody hose and tube assembly.

(12) Connect the rubber fuel hose between the body tube assembly and the fuel pump nipple at the body tube joint. Close the fuel fill cap.

(13) Remove the cabin heater support device from under the vehicle.

(14) Lower the vehicle.

(15) Fill the engine cooling system (Refer to 7 - COOLING - STANDARD PROCEDURE).

(16) Verify function of the cabin heater.

HEATER WIRING

REMOVAL

(1) Elevate vehicle on a lift taking note of the exhaust tube flexible section.

(2) Unplug connector from vehicle wiring harness to cabin heater harness.

(3) Unplug connector from cabin heater harness to dosing pump connector.

(4) Unplug two connectors from cabin heater harness to cabin heater controller connectors.

(5) Remove two wiring harness connectors from underbody.

(6) Remove two wiring harness connectors from cabin heater shield.

(7) Carefully route the cabin heater harness to the left side between the cabin heater unit and the cabin heater shield.

INSTALLATION

(1) Carefully route the cabin heater harness from the left side of the cabin heater between the cabin heater unit and the cabin heater shield.

(2) Install the two wiring harness retaining connectors to the cabin heater shield.

(3) Route the wiring harness along the underside of the vehicle and install the two wiring harness retaining connectors.

(4) Plug the two connectors from the cabin heater harness to the cabin heater controller.

(5) Plug the connector to the cabin heater harness to the dosing pump connector.

(6) Plug the connector from the vehicle wiring harness to the cabin heater harness.

(7) Lower the vehicle.

(8) Verify function of the cabin heater.

EMISSIONS CONTROL

TABLE OF CONTENTS

page

EMISSIONS CONTROL
DESCRIPTION
VEHICLE EMISSION CONTROL INFORMATION LABEL 1
TRIP DEFINITION 1
DESCRIPTION - MONITORED COMPONENT . 1
NON-MONITORED CIRCUITS 5
DESCRIPTION - MONITORED SYSTEMS 6
HIGH AND LOW LIMITS 9
OPERATION
SYSTEM 9
DRB III® STATE DISPLAY TEST MODE 10
EVAPORATIVE EMISSIONS 11
EXHAUST GAS RECIRCULATION 22
ON-BOARD DIAGNOSTICS 25

EMISSIONS CONTROL

DESCRIPTION

VEHICLE EMISSION CONTROL INFORMATION LABEL

All models have a Vehicle Emission Control Information (VECI) Label. Chrysler permanently attaches the label in the engine compartment. It cannot be removed without defacing information and destroying the label.

The label contains the vehicle's emission specifications and vacuum hose routings. All hoses must be connected and routed according to the label.

TRIP DEFINITION

A "Trip" means vehicle operation (following an engine-off period) of duration and driving mode such that all components and systems are monitored at least once by the diagnostic system. The monitors must successfully pass before the PCM can verify that a previously malfunctioning component is meeting the normal operating conditions of that component. For misfire or fuel system malfunction, the MIL may be extinguished if the fault does not recur when monitored during three subsequent sequential driving cycles in which conditions are similar to those under which the malfunction was first determined.

Anytime the MIL is illuminated, a DTC is stored. The DTC can self erase only after the MIL has been extinguished. Once the MIL is extinguished, the PCM must pass the diagnostic test for the most recent DTC for 40 warm-up cycles (80 warm-up cycles for the Fuel System Monitor and the Misfire Monitor). A warm-up cycle can best be described by the following:

- The engine must be running
- A rise of 40°F in engine temperature must occur from the time when the engine was started
- Engine coolant temperature must crossover 160°F
- A "driving cycle" that consists of engine start up and engine shut off.

Once the above conditions occur, the PCM is considered to have passed a warm-up cycle. Due to the conditions required to extinguish the MIL and erase the DTC, it is most important that after a repair has been made, all DTC's be erased and the repair verified by running 1–good trip.

DESCRIPTION - MONITORED COMPONENT

There are several components that will affect vehicle emissions if they malfunction. If one of these components malfunctions the Malfunction Indicator Lamp (Check Engine) will illuminate.

Some of the component monitors are checking for proper operation of the part. Electrically operated components now have input (rationality) and output (functionality) checks as well as continuity tests (opens/shorts). Previously, a component like the Throttle Position sensor (TPS) was checked by the PCM for an open or shorted circuit. If one of these conditions occurred, a DTC was set. Now there is a check to ensure that the component is working. This is done by watching for a TPS indication of a greater or lesser throttle opening than MAP and engine rpm indicate. In the case of the TPS, if engine vacuum is high and engine rpm is 1600 or greater and the TPS indicates a large throttle opening, a DTC will be set. The same applies to low vacuum and 1600 rpm.

Any component that has an associated limp in will set a fault after 1 trip with the malfunction present.

Refer to the Diagnostic Trouble Codes Description Charts in this section and the appropriate Powertrain Diagnostic Procedure Manual for diagnostic procedures.

EMISSIONS CONTROL (Continued)

The following is a list of the monitored components:

- Catalyst Monitor
- Comprehensive Components
- EGR (if equipped)
- Fuel Control (rich/lean)
- Oxygen Sensor Monitor
- Oxygen Sensor Heater Monitor
- Purge
- Misfire
- Natural Vacuum Leak Detection (NVLD)

COMPREHENSIVE COMPONENTS

Along with the major monitors, OBD II requires that the diagnostic system monitor any component that could affect emissions levels. In many cases, these components were being tested under OBD I. The OBD I requirements focused mainly on testing emissions-related components for electrical opens and shorts.

However, OBD II also requires that inputs from powertrain components to the PCM be tested for **rationality**, and that outputs to powertrain components from the PCM be tested for **functionality**. Methods for monitoring the various Comprehensive Component monitoring include:

(1) Circuit Continuity
- Open
- Shorted high
- Shorted to ground

(2) Rationality or Proper Functioning
- Inputs tested for rationality
- Outputs tested for functionality

NOTE: Comprehensive component monitors are continuous. Therefore, enabling conditions do not apply. All will set a DTC and illuminate the MIL in 1-trip.

Input Rationality—While input signals to the PCM are constantly being monitored for electrical opens and shorts, they are also tested for rationality. This means that the input signal is compared against other inputs and information to see if it makes sense under the current conditions.

PCM sensor inputs that are checked for rationality include:

- Manifold Absolute Pressure (MAP) Sensor
- Oxygen Sensor (O2S) (slow response)
- Engine Coolant Temperature (ECT) Sensor
- Camshaft Position (CMP) Sensor
- Vehicle Speed Sensor
- Crankshaft Position (CKP) Sensor
- Intake Air Temperature (IAT) Sensor
- Throttle Position (TPS) Sensor
- Ambient/Battery Temperature Sensors
- Power Steering Switch
- Oxygen Sensor Heater
- Engine Controller
- Brake Switch
- Natural Vacuum Leak Detection (NVLD)
- P/N Switch
- Trans Controls

Output Functionality—PCM outputs are tested for functionality in addition to testing for opens and shorts. When the PCM provides a voltage to an output component, it can verify that the command was carried out by monitoring specific input signals for expected changes. For example, when the PCM commands the Idle Air Control (IAC) Motor to a specific position under certain operating conditions, it expects to see a specific (target) idle speed (RPM). If it does not, it stores a DTC.

PCM outputs monitored for functionality include:

- Fuel Injectors
- Ignition Coils
- Torque Converter Clutch Solenoid
- Idle Air Control
- Purge Solenoid
- EGR Solenoid
- Radiator Fan Control
- Trans Controls

OXYGEN SENSOR (O2S) MONITOR

DESCRIPTION—Effective control of exhaust emissions is achieved by an oxygen feedback system. The most important element of the feedback system is the O2S. The O2S is located in the exhaust path. Once it reaches operating temperature 300° to 350°C (572° to 662°F), the sensor generates a voltage that is inversely proportional to the amount of oxygen in the exhaust. When there is a large amount of oxygen in the exhaust caused by a lean condition, misfire or exhaust leak, the sensor produces a low voltage, below 450 mV. When the oxygen content is lower, caused by a rich condition, the sensor produces a higher voltage, above 450mV.

The information obtained by the sensor is used to calculate the fuel injector pulse width. The PCM is programmed to maintain the optimum air/fuel ratio. At this mixture ratio, the catalyst works best to remove hydrocarbons (HC), carbon monoxide (CO) and nitrous oxide (NOx) from the exhaust.

The O2S is also the main sensing element for the EGR, Catalyst and Fuel Monitors, and purge.

The O2S may fail in any or all of the following manners:

- Slow response rate (Big Slope)
- Reduced output voltage (Half Cycle)
- Heater Performance

Slow Response Rate (Big Slope)—Response rate is the time required for the sensor to switch from lean to rich signal output once it is exposed to a

EMISSIONS CONTROL (Continued)

richer than optimum A/F mixture or vice versa. As the PCM adjusts the air/fuel ratio, the sensor must be able to rapidly detect the change. As the sensor ages, it could take longer to detect the changes in the oxygen content of the exhaust gas. The rate of change that an oxygen sensor experiences is called 'Big Slope'. The PCM checks the oxygen sensor voltage in increments of a few milliseconds.

Reduced Output Voltage (Half Cycle)—The output voltage of the O2S ranges from 0 to 1 volt. A good sensor can easily generate any output voltage in this range as it is exposed to different concentrations of oxygen. To detect a shift in the A/F mixture (lean or rich), the output voltage has to change beyond a threshold value. A malfunctioning sensor could have difficulty changing beyond the threshold value. Many times the condition is only temporey and the sensor will recover. Under normal conditions the voltage signal surpasses the threshold, and a counter is incremented by one. This is called the Half Cycle Counter.

Heater Performance—The heater is tested by a separate monitor. Refer to the Oxygen Sensor Heater Monitor.

OPERATION—As the Oxygen Sensor signal switches, the PCM monitors the half cycle and big slope signals from the oxygen sensor. If during the test neither counter reaches a predetermined value, a malfunction is entered and a Freeze Frame is stored. Only one counter reaching its predetermined value is needed for the monitor to pass.

The Oxygen Sensor Signal Monitor is a two trip monitor that is tested only once per trip. When the Oxygen Sensor fails the test in two consecutive trips, the MIL is illuminated and a DTC is set. The MIL is extinguished when the Oxygen Sensor monitor passes in three consecutive trips. The DTC is erased from memory after 40 consecutive warm-up cycles without test failure.

Enabling Conditions—The following conditions must typically be met for the PCM to run the oxygen sensor monitor:

- Battery voltage
- Engine temperature
- Engine run time
- Engine run time at a predetermined speed
- Engine run time at a predetermined speed and throttle opening
- Transmission in gear (automatic only)
- Fuel system in Closed Loop
- Long Term Adaptive (within parameters)
- Power Steering Switch in low PSI (no load)
- Engine at idle
- Fuel level above 15%
- Ambient air temperature
- Barometric pressure
- Engine RPM within acceptable range of desired idle
- Closed throttle speed

Pending Conditions—The Task Manager typically does not run the Oxygen Sensor Signal Monitor if overlapping monitors are running or the MIL is illuminated for any of the following:

- Misfire Monitor
- Front Oxygen Sensor and Heater Monitor
- MAP Sensor
- Vehicle Speed Sensor
- Engine Coolant Temperature Sensor
- Throttle Position Sensor
- Engine Controller Self Test Faults
- Cam or Crank Sensor
- Injector and Coil
- Idle Air Control Motor
- EVAP Electrical
- EGR Solenoid Electrical
- Intake Air Temperature
- 5 Volt Feed

Conflict—The Task Manager does not run the Oxygen Sensor Monitor if any of the following conditions are present:

- A/C ON (A/C clutch cycling temporarily suspends monitor)
- Purge flow in progress
- Ethenal content learn is taking place and the ethenal used once flag is set

Suspend—The Task Manager suspends maturing a fault for the Oxygen Sensor Monitor if an of the following are present:

- Oxygen Sensor Heater Monitor, Priority 1
- Misfire Monitor, Priority 2

OXYGEN SENSOR HEATER MONITOR (NGC)

DESCRIPTION—If the Oxygen sensor (O2S) DTC as well as a O2S heater DTC is present, the O2S Heater DTC MUST be repaired first. After the O2S Heater is repaired, verify that the sensor circuit is operating correctly.

The voltage reading taken from the O2S are very temperature sensitive. The readings taken from the O2S are not accurate below 300 degrees C. Heating the O2S is done to allow the engine controller to shift to closed loop control as soon as possible. The heating element used to heat the O2S must be tested to ensure that it is heating the sensor properly. Starting with the introduction on the NGC module the strategy for checking the heater circuit has changed. The heater resistance is checked by the NGC almost immediately after the engine is started. The same O2S heater return pin used to read the heater resistance is capable of detecting an open circuit, a shorted high or shorted low condition.

EMISSIONS CONTROL (Continued)

OXYGEN SENSOR HEATER MONITOR (SBEC)

DESCRIPTION—If there is an oxygen sensor (O2S) DTC as well as a O2S heater DTC, the O2S heater fault MUST be repaired first. After the O2S fault is repaired, verify that the heater circuit is operating correctly.

The voltage readings taken from the O2S are very temperature sensitive. The readings are not accurate below 300°C. Heating of the O2S is done to allow the engine controller to shift to closed loop control as soon as possible. The heating element used to heat the O2S must be tested to ensure that it is heating the sensor properly.

The heater element itself is not tested directly. The sensor output is used to test the heater by isolating the effect of the heater element on the O2S output voltage from the other effects. The resistance is normally between 100 ohms and 4.5 megaohms. When oxygen sensor temperature increases, the resistance in the internal circuit decreases. The PCM sends a 5 volts biased signal through the oxygen sensors to ground this monitoring circuit. As the temperature increases, resistance decreases and the PCM detects a lower voltage at the reference signal. Inversely, as the temperature decreases, the resistance increases and the PCM detects a higher voltage at the reference signal. The O2S circuit is monitored for a drop in voltage.

OPERATION—The Oxygen Sensor Heater Monitor begins after the ignition has been turned OFF and the O2 sensors have cooled. The PCM sends a 5 volt bias to the oxygen sensor every 1.6 seconds. The PCM keeps it biased for 35 ms each time. As the sensor cools down, the resistance increases and the PCM reads the increase in voltage. Once voltage has increased to a predetermined amount, higher than when the test started, the oxygen sensor is cool enough to test heater operation.

When the oxygen sensor is cool enough, the PCM energizes the ASD relay. Voltage to the O2 sensor begins to increase the temperature. As the sensor temperature increases, the internal resistance decreases. The PCM continues biasing the 5 volt signal to the sensor. Each time the signal is biased, the PCM reads a voltage decrease. When the PCM detects a voltage decrease of a predetermined value for several biased pulses, the test passes.

The heater elements are tested each time the engine is turned OFF if all the enabling conditions are met. If the monitor fails, the PCM stores a maturing fault and a Freeze Frame is entered. If two consecutive tests fail, a DTC is stored. Because the ignition is OFF, the MIL is illuminated at the beginning of the next key cycle, after the 2nd failure.

Enabling Conditions—The following conditions must be met for the PCM to run the oxygen sensor heater test:

- Engine run time of at least 5.1 minutes
- Key OFF power down
- Battery voltage of at least 10 volts
- Sufficient Oxygen Sensor cool down

Pending Conditions—There are not conditions or situations that prompt conflict or suspension of testing. The oxygen sensor heater test is not run pending resolution of MIL illumination due to oxygen sensor failure.

Suspend—There are no conditions which exist for suspending the Heater Monitor.

CATALYST MONITOR

To comply with clean air regulations, vehicles are equipped with catalytic converters. These converters reduce the emission of hydrocarbons, oxides of nitrogen and carbon monoxide.

Normal vehicle miles or engine misfire can cause a catalyst to decay. A meltdown of the ceramic core can cause a reduction of the exhaust passage. This can increase vehicle emissions and deteriorate engine performance, driveability and fuel economy.

The catalyst monitor uses dual oxygen sensors (O2S's) to monitor the efficiency of the converter. The dual O2S strategy is based on the fact that as a catalyst deteriorates, its oxygen storage capacity and its efficiency are both reduced. By monitoring the oxygen storage capacity of a catalyst, its efficiency can be indirectly calculated. The upstream O2S is used to detect the amount of oxygen in the exhaust gas before the gas enters the catalytic converter. The PCM calculates the A/F mixture from the output of the O2S. A low voltage indicates high oxygen content (lean mixture). A high voltage indicates a low content of oxygen (rich mixture).

When the upstream O2S detects a high oxygen condition, there is an abundance of oxygen in the exhaust gas. A functioning converter would store this oxygen so it can use it for the oxidation of HC and CO. As the converter absorbs the oxygen, there will be a lack of oxygen downstream of the converter. The output of the downstream O2S will indicate limited activity in this condition.

As the converter loses the ability to store oxygen, the condition can be detected from the behavior of the downstream O2S. When the efficiency drops, no chemical reaction takes place. This means the concentration of oxygen will be the same downstream as upstream. The output voltage of the downstream O2S copies the voltage of the upstream sensor. The only difference is a time lag (seen by the PCM) between the switching of the O2S's.

EMISSIONS CONTROL (Continued)

To monitor the system, the number of lean-to-rich switches of upstream and downstream O2S's is counted. The ratio of downstream switches to upstream switches is used to determine whether the catalyst is operating properly. An effective catalyst will have fewer downstream switches than it has upstream switches i.e., a ratio closer to zero. For a totally ineffective catalyst, this ratio will be one-to-one, indicating that no oxidation occurs in the device.

The system must be monitored so that when catalyst efficiency deteriorates and exhaust emissions increase to over the legal limit, the MIL (check engine lamp) will be illuminated.

Monitor Operation—To monitor catalyst efficiency, the PCM expands the rich and lean switch points of the heated oxygen sensor. With extended switch points, the air/fuel mixture runs richer and leaner to overburden the catalytic converter. Once the test is started, the air/fuel mixture runs rich and lean and the O2 switches are counted. A switch is counted when an oxygen sensor signal goes from below the lean threshold to above the rich threshold. The number of Rear O2 sensor switches is divided by the number of Front O2 sensor switches to determine the switching ratio.

The test runs for 20 seconds. As catalyst efficiency deteriorated over the life of the vehicle, the switch rate at the downstream sensor approaches that of the upstream sensor. If at any point during the test period the switch ratio reaches a predetermined value, a counter is incremented by one. The monitor is enabled to run another test during that trip. When the test fails three times, the counter increments to three, a malfunction is entered, and a Freeze Frame is stored. When the counter increments to three during the next trip, the code is matured and the MIL is illuminated. If the test passes the first, no further testing is conducted during that trip.

The MIL is extinguished after three consecutive good trips. The good trip criteria for the catalyst monitor is more stringent than the failure criteria. In order to pass the test and increment one good trip, the downstream sensor switch rate must be less than 80% of the upstream rate (60% for manual transmissions). The failure percentages are 90% and 70% respectively.

Enabling Conditions—The following conditions must typically be met before the PCM runs the catalyst monitor. Specific times for each parameter may be different from engine to engine.

- Accumulated drive time
- Enable time
- Ambient air temperature
- Barometric pressure
- Catalyst warm-up counter
- Engine coolant temperature
- Accumulated throttle position sensor
- Vehicle speed
- MAP
- RPM
- Engine in closed loop
- Fuel level

Pending Conditions—

- Misfire DTC
- Front Oxygen Sensor Response
- Front Oxygen Sensor Heater Monitor
- Front Oxygen Sensor Electrical
- Rear Oxygen Sensor Rationality (middle check)
- Rear Oxygen Sensor Heater Monitor
- Rear Oxygen Sensor Electrical
- Fuel System Monitor
- All TPS faults
- All MAP faults
- All ECT sensor faults
- Purge flow solenoid functionality
- Purge flow solenoid electrical
- All PCM self test faults
- All CMP and CKP sensor faults
- All injector and ignition electrical faults
- Idle Air Control (IAC) motor functionality
- Vehicle Speed Sensor
- Brake switch
- Intake air temperature

Conflict—The catalyst monitor does not run if any of the following are conditions are present:

- EGR Monitor in progress
- Fuel system rich intrusive test in progress
- EVAP Monitor in progress
- Time since start is less than 60 seconds
- Low fuel level
- Low ambient air temperature
- Ethanel content learn is taking place and the ethenal used once flag is set

Suspend—The Task Manager does not mature a catalyst fault if any of the following are present:

- Oxygen Sensor Monitor, Priority 1
- Upstream Oxygen Sensor Heater, Priority 1
- EGR Monitor, Priority 1
- EVAP Monitor, Priority 1
- Fuel System Monitor, Priority 2
- Misfire Monitor, Priority 2

NON-MONITORED CIRCUITS

The PCM does not monitor all circuits, systems and conditions that could have malfunctions causing driveability problems. However, problems with these systems may cause the PCM to store diagnostic trouble codes for other systems or components. For example, a fuel pressure problem will not register a fault directly, but could cause a rich/lean condition or misfire. This could cause the PCM to store an oxygen sensor or misfire diagnostic trouble code.

EMISSIONS CONTROL (Continued)

The major non-monitored circuits are listed below along with examples of failures modes that do not directly cause the PCM to set a DTC, but for a system that is monitored.

FUEL PRESSURE

The fuel pressure regulator controls fuel system pressure. The PCM cannot detect a clogged fuel pump inlet filter, clogged in-line fuel filter, or a pinched fuel supply or return line. However, these could result in a rich or lean condition causing the PCM to store an oxygen sensor, fuel system, or misfire diagnostic trouble code.

SECONDARY IGNITION CIRCUIT

The PCM cannot detect an inoperative ignition coil, fouled or worn spark plugs, ignition cross firing, or open spark plug cables. The misfire will however, increase the oxygen content in the exhaust, deceiving the PCM in to thinking the fuel system is too lean. Also see misfire detection. There are DTC's that can detect misfire and Ionization shorts in the secondary ignition circuit, refer to the Powertrain Diagnostic manual for more information

CYLINDER COMPRESSION

The PCM cannot detect uneven, low, or high engine cylinder compression. Low compression lowers O2 content in the exhaust. Leading to fuel system, oxygen sensor, or misfire detection fault.

EXHAUST SYSTEM

The PCM cannot detect a plugged, restricted or leaking exhaust system. It may set a EGR (if equipped) or Fuel system or O2S fault.

FUEL INJECTOR MECHANICAL MALFUNCTIONS

The PCM cannot determine if a fuel injector is clogged, the needle is sticking or if the wrong injector is installed. However, these could result in a rich or lean condition causing the PCM to store a diagnostic trouble code for either misfire, an oxygen sensor, or the fuel system.

EXCESSIVE OIL CONSUMPTION

Although the PCM monitors engine exhaust oxygen content when the system is in closed loop, it cannot determine excessive oil consumption.

THROTTLE BODY AIR FLOW

The PCM cannot detect a clogged or restricted air cleaner inlet or filter element.

VACUUM ASSIST

The PCM cannot detect leaks or restrictions in the vacuum circuits of vacuum assisted engine control system devices. However, these could cause the PCM to store a MAP sensor diagnostic trouble code and cause a high idle condition.

PCM SYSTEM GROUND

The PCM cannot determine a poor system ground. However, one or more diagnostic trouble codes may be generated as a result of this condition. The module should be mounted to the body at all times, including when diagnostics are performed.

PCM CONNECTOR ENGAGEMENT

The PCM may not be able to determine spread or damaged connector pins. However, it might store diagnostic trouble codes as a result of spread connector pins.

DESCRIPTION - MONITORED SYSTEMS

There are new electronic circuit monitors that check fuel, emission, engine and ignition performance. These monitors use information from various sensor circuits to indicate the overall operation of the fuel, engine, ignition and emission systems and thus the emissions performance of the vehicle.

The fuel, engine, ignition and emission systems monitors do not indicate a specific component problem. They do indicate that there is an implied problem within one of the systems and that a specific problem must be diagnosed.

If any of these monitors detect a problem affecting vehicle emissions, the Malfunction Indicator (Check Engine) Lamp will be illuminated. These monitors generate Diagnostic Trouble Codes that can be displayed with the a scan tool.

The following is a list of the system monitors:

- EGR Monitor (if equipped)
- Misfire Monitor
- Fuel System Monitor
- Oxygen Sensor Monitor
- Oxygen Sensor Heater Monitor
- Catalyst Monitor
- Evaporative System Leak Detection Monitor (if equipped)

Following is a description of each system monitor, and its DTC.

Refer to the appropriate Powertrain Diagnostics Procedures manual for diagnostic procedures.

OXYGEN SENSOR (O2S) MONITOR

Effective control of exhaust emissions is achieved by an oxygen feedback system. The most important element of the feedback system is the O2S. The O2S is located in the exhaust path. Once it reaches operating temperatures of 300° to 350°C (572° to 662°F), the sensor generates a voltage that is inversely proportional to the amount of oxygen in the exhaust.

EMISSIONS CONTROL (Continued)

The information obtained by the sensor is used to calculate the fuel injector pulse width. The PCM is programmed to maintain the optimum air/fuel ratio. At this mixture ratio, the catalyst works best to remove hydrocarbons (HC), carbon monoxide (CO) and nitrous oxide (NOx) from the exhaust.

The O2S is also the main sensing element for the EGR (if equipped), Catalyst and Fuel Monitors.

The O2S may fail in any or all of the following manners:

- Slow response rate
- Reduced output voltage
- Dynamic shift
- Shorted or open circuits

Response rate is the time required for the sensor to switch from lean to rich once it is exposed to a richer than optimum A/F mixture or vice versa. As the sensor starts malfunctioning, it could take longer to detect the changes in the oxygen content of the exhaust gas.

The output voltage of the O2S ranges from 0 to 1 volt (voltages are offset by 2.5 volts on NGC vehicles). A good sensor can easily generate any output voltage in this range as it is exposed to different concentrations of oxygen. To detect a shift in the A/F mixture (lean or rich), the output voltage has to change beyond a threshold value. A malfunctioning sensor could have difficulty changing beyond the threshold value.

OXYGEN SENSOR HEATER MONITOR

If there is an oxygen sensor (O2S) DTC as well as a O2S heater DTC, the O2S heater fault MUST be repaired first. After the O2S fault is repaired, verify that the heater circuit is operating correctly.

Effective control of exhaust emissions is achieved by an oxygen feedback system. The most important element of the feedback system is the O2S. The O2S is located in the exhaust path. Once it reaches operating temperatures of 300° to 350°C (572 ° to 662°F), the sensor generates a voltage that is inversely proportional to the amount of oxygen in the exhaust. The information obtained by the sensor is used to calculate the fuel injector pulse width. This maintains a 14.7 to 1 Air Fuel (A/F) ratio. At this mixture ratio, the catalyst works best to remove hydrocarbons (HC), carbon monoxide (CO) and nitrogen oxide (NOx) from the exhaust.

The voltage readings taken from the O2S are very temperature sensitive. The readings are not accurate below 300°C. Heating of the O2S is done to allow the engine controller to shift to closed loop control as soon as possible. The heating element used to heat the O2S must be tested to ensure that it is heating the sensor properly.

The O2S circuit is monitored for a drop in voltage. The sensor output is used to test the heater by isolating the effect of the heater element on the O2S output voltage from the other effects.

EGR MONITOR (if equipped)

The Powertrain Control Module (PCM) performs an on-board diagnostic check of the EGR system.

The EGR monitor is used to test whether the EGR system is operating within specifications. The diagnostic check activates only during selected engine/driving conditions. When the conditions are met, the EGR is turned off (solenoid energized) and the O2S compensation control is monitored. Turning off the EGR shifts the air fuel (A/F) ratio in the lean direction. The O2S data should indicate an increase in the O2 concentration in the combustion chamber when the exhaust gases are no longer recirculated. While this test does not directly measure the operation of the EGR system, it can be inferred from the shift in the O2S data whether the EGR system is operating correctly. Because the O2S is being used, the O2S test must pass its test before the EGR test. Also looks at EGR linear potentiometer for feedback.

MISFIRE MONITOR

Excessive engine misfire results in increased catalyst temperature and causes an increase in HC emissions. Severe misfires could cause catalyst damage. To prevent catalytic convertor damage, the PCM monitors engine misfire.

The Powertrain Control Module (PCM) monitors for misfire during most engine operating conditions (positive torque) by looking at changes in the crankshaft speed. If a misfire occurs the speed of the crankshaft will vary more than normal.

FUEL SYSTEM MONITOR

To comply with clean air regulations, vehicles are equipped with catalytic converters. These converters reduce the emission of hydrocarbons, oxides of nitrogen and carbon monoxide. The catalyst works best when the air fuel (A/F) ratio is at or near the optimum of 14.7 to 1.

The PCM is programmed to maintain the optimum air/fuel ratio. This is done by making short term corrections in the fuel injector pulse width based on the O2S output. The programmed memory acts as a self calibration tool that the engine controller uses to compensate for variations in engine specifications, sensor tolerances and engine fatigue over the life span of the engine. By monitoring the actual air-fuel ratio with the O2S (short term) and multiplying that with the program long-term (adaptive) memory and comparing that to the limit, it can be determined whether it will pass an emissions test. If a malfunc-

tion occurs such that the PCM cannot maintain the optimum A/F ratio, then the MIL will be illuminated.

CATALYST MONITOR

To comply with clean air regulations, vehicles are equipped with catalytic converters. These converters reduce the emission of hydrocarbons, oxides of nitrogen and carbon monoxide.

Normal vehicle miles or engine misfire can cause a catalyst to decay. A meltdown of the ceramic core can cause a reduction of the exhaust passage. This can increase vehicle emissions and deteriorate engine performance, driveability and fuel economy.

The catalyst monitor uses dual oxygen sensors (O2S's) to monitor the efficiency of the converter. The dual O2S's strategy is based on the fact that as a catalyst deteriorates, its oxygen storage capacity and its efficiency are both reduced. By monitoring the oxygen storage capacity of a catalyst, its efficiency can be indirectly calculated. The upstream O2S is used to detect the amount of oxygen in the exhaust gas before the gas enters the catalytic converter. The PCM calculates the A/F mixture from the output of the O2S. A low voltage indicates high oxygen content (lean mixture). A high voltage indicates a low content of oxygen (rich mixture).

When the upstream O2S detects a lean condition, there is an abundance of oxygen in the exhaust gas. A functioning converter would store this oxygen so it can use it for the oxidation of HC and CO. As the converter absorbs the oxygen, there will be a lack of oxygen downstream of the converter. The output of the downstream O2S will indicate limited activity in this condition.

As the converter loses the ability to store oxygen, the condition can be detected from the behavior of the downstream O2S. When the efficiency drops, no chemical reaction takes place. This means the concentration of oxygen will be the same downstream as upstream. The output voltage of the downstream O2S copies the voltage of the upstream sensor. The only difference is a time lag (seen by the PCM) between the switching of the O2S's.

To monitor the system, the number of lean-to-rich switches of upstream and downstream O2S's is counted. The ratio of downstream switches to upstream switches is used to determine whether the catalyst is operating properly. An effective catalyst will have fewer downstream switches than it has upstream switches i.e., a ratio closer to zero. For a totally ineffective catalyst, this ratio will be one-to-one, indicating that no oxidation occurs in the device.

The system must be monitored so that when catalyst efficiency deteriorates and exhaust emissions increase to over the legal limit, the MIL (Check Engine lamp) will be illuminated.

NATURAL VACUUM LEAK DETECTION (NVLD) (if equipped)

The Natural Vacuum Leak Detection (NVLD) system is the next generation evaporative leak detection system that will first be used on vehicles equipped with the Next Generation Controller (NGC). This new system replaces the leak detection pump as the method of evaporative system leak detection. This is to detect a leak equivalent to a 0.020″ (0.5 mm) hole. This system has the capability to detect holes of this size very dependably.

The basic leak detection theory employed with NVLD is the ″Gas Law″. This is to say that the pressure in a sealed vessel will change if the temperature of the gas in the vessel changes. The vessel will only see this effect if it is indeed sealed. Even small leaks will allow the pressure in the vessel to come to equilibrium with the ambient pressure. In addition to the detection of very small leaks, this system has the capability of detecting medium as well as large evaporative system leaks.

The NVLD seals the canister vent during engine off conditions. If the EVAP system has a leak of less than the failure threshold, the evaporative system will be pulled into a vacuum, either due to the cool down from operating temperature or diurnal ambient temperature cycling. The diurnal effect is considered one of the primary contributors to the leak determination by this diagnostic. When the vacuum in the system exceeds about 1″ H2O (0.25 KPA), a vacuum switch closes. The switch closure sends a signal to the NGC. The NGC, via appropriate logic strategies (described below), utilizes the switch signal, or lack thereof, to make a determination of whether a leak is present.

The NVLD device is designed with a normally open vacuum switch, a normally closed solenoid, and a seal, which is actuated by both the solenoid and a diaphragm. The NVLD is located on the atmospheric vent side of the canister. The NVLD assembly may be mounted on top of the canister outlet, or in-line between the canister and atmospheric vent filter. The normally open vacuum switch will close with about 1″ H2O (0.25 KPA) vacuum in the evaporative system. The diaphragm actuates the switch. This is above the opening point of the fuel inlet check valve in the fill tube so cap off leaks can be detected. Submerged fill systems must have recirculation lines that do not have the in-line normally closed check valve that protects the system from failed nozzle liquid ingestion, in order to detect cap off conditions.

The normally closed valve in the NVLD is intended to maintain the seal on the evaporative system during the engine off condition. If vacuum in the evaporative system exceeds 3″ to 6″ H2O (0.75 to 1.5 KPA), the valve will be pulled off the seat, opening the seal. This will protect the system from excessive vacuum

as well as allowing sufficient purge flow in the event that the solenoid was to become inoperative.

The solenoid actuates the valve to unseal the canister vent while the engine is running. It also will be used to close the vent during the medium and large leak tests and during the purge flow check. This solenoid requires initial 1.5 amps of current to pull the valve open but after 100 ms. will be duty cycled down to an average of about 150 mA for the remainder of the drive cycle.

Another feature in the device is a diaphragm that will open the seal in the NVLD with pressure in the evaporative system. The device will ″blow off″ at about 0.5″ H2O (0.12 KPA) pressure to permit the venting of vapors during refueling. An added benefit to this is that it will also allow the tank to ″breathe″ during increasing temperatures, thus limiting the pressure in the tank to this low level. This is beneficial because the induced vacuum during a subsequent declining temperature will achieve the switch closed (pass threshold) sooner than if the tank had to decay from a built up pressure.

The device itself has 3 wires: Switch sense, solenoid driver and ground. It also includes a resistor to protect the switch from a short to battery or a short to ground. The NGC utilizes a high-side driver to energize and duty-cycle the solenoid.

HIGH AND LOW LIMITS

The PCM compares input signal voltages from each input device with established high and low limits for the device. If the input voltage is not within limits and other criteria are met, the PCM stores a diagnostic trouble code in memory. Other diagnostic trouble code criteria might include engine RPM limits or input voltages from other sensors or switches that must be present before verifying a diagnostic trouble code condition.

OPERATION

SYSTEM

The Powertrain Control Module (PCM) monitors many different circuits in the fuel injection, ignition, emission and engine systems. If the PCM senses a problem with a monitored circuit often enough to indicate an actual problem, it stores a Diagnostic Trouble Code (DTC) in the PCM's memory. If the code applies to a non-emissions related component or system, and the problem is repaired or ceases to exist, the PCM cancels the code after 40 warmup cycles. Diagnostic trouble codes that affect vehicle emissions illuminate the Malfunction Indicator Lamp (MIL). Refer to Malfunction Indicator Lamp in this section.

Certain criteria must be met before the PCM stores a DTC in memory. The criteria may be a specific range of engine RPM, engine temperature, and/or input voltage to the PCM.

The PCM might not store a DTC for a monitored circuit even though a malfunction has occurred. This may happen because one of the DTC criteria for the circuit has not been met. **For example** , assume the diagnostic trouble code criteria requires the PCM to monitor the circuit only when the engine operates between 750 and 2000 RPM. Suppose the sensor's output circuit shorts to ground when engine operates above 2400 RPM (resulting in 0 volt input to the PCM). Because the condition happens at an engine speed above the maximum threshold (2000 rpm), the PCM will not store a DTC.

There are several operating conditions for which the PCM monitors and sets DTC's. Refer to Monitored Systems, Components, and Non-Monitored Circuits in this section.

NOTE: Various diagnostic procedures may actually cause a diagnostic monitor to set a DTC. For instance, pulling a spark plug wire to perform a spark test may set the misfire code. When a repair is completed and verified, use the scan tool to erase all DTC's and extinguish the MIL.

Technicians can display stored DTC's. For obtaining the DTC information, use the Data Link Connector with the scan tool (Fig. 1).

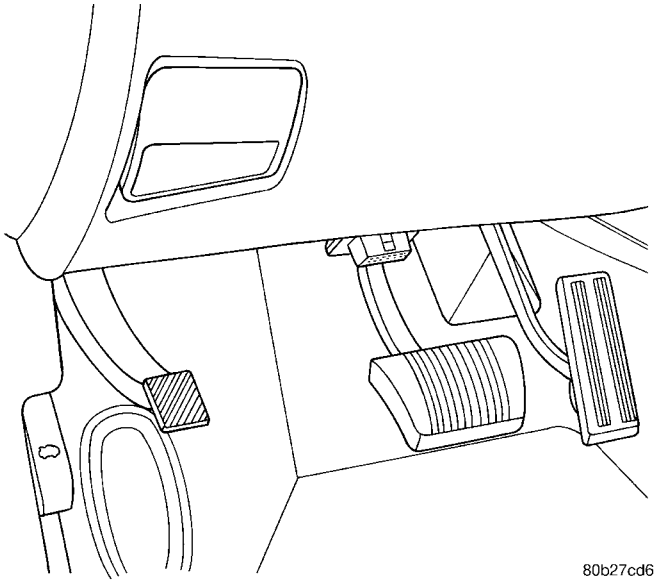

Fig. 1 Data Link Connector

DRB III® STATE DISPLAY TEST MODE

OPERATION

The switch inputs to the Powertrain Control Module (PCM) have two recognized states; HIGH and LOW. For this reason, the PCM cannot recognize the difference between a selected switch position versus an open circuit, a short circuit, or a defective switch. If the State Display screen shows the change from HIGH to LOW or LOW to HIGH, assume the entire switch circuit to the PCM functions properly. From the state display screen, access either State Display Inputs and Outputs or State Display Sensors.

EVAPORATIVE EMISSIONS

TABLE OF CONTENTS

page

EVAPORATIVE EMISSIONS
OPERATION - EVAPORATION CONTROL SYSTEM . . . 11
SPECIFICATIONS
TORQUE . . . 12
EVAP/PURGE SOLENOID
DESCRIPTION . . . 13
OPERATION . . . 13
REMOVAL . . . 13
INSTALLATION . . . 13
FUEL FILLER CAP
DESCRIPTION . . . 13
OPERATION . . . 13
NATURAL VAC LEAK DETECTION ASSY
REMOVAL . . . 14
INSTALLATION . . . 14
LEAK DETECTION PUMP
REMOVAL . . . 15
INSTALLATION . . . 15
ORVR
OPERATION . . . 15

page

DIAGNOSIS AND TESTING - VEHICLE DOES NOT FILL . . . 17
PCV VALVE
DESCRIPTION . . . 18
OPERATION . . . 18
DIAGNOSIS AND TESTING - PCV SYSTEM . . . 18
VAPOR CANISTER
DESCRIPTION . . . 19
OPERATION . . . 19
REMOVAL
REMOVAL . . . 19
REMOVAL - WITH NVLD - FOLD-IN-FLOOR . 20
REMOVAL - REAR EVAP CANISTER . . . 20
INSTALLATION
INSTALLATION . . . 20
INSTALLATION - WITH NVLD - FOLD-IN-FLOOR . . . 20
INSTALLATION - REAR EVAP CANISTER . . . 21

EVAPORATIVE EMISSIONS

OPERATION - EVAPORATION CONTROL SYSTEM

The evaporation control system prevents the emission of fuel tank vapors into the atmosphere. When fuel evaporates in the fuel tank, the vapors pass through vent hoses or tubes to an activated carbon filled evaporative canister. The canister temporarily holds the vapors. The Powertrain Control Module (PCM) allows intake manifold vacuum to draw vapors into the combustion chambers during certain operating conditions (Fig. 1).

All engines use a proportional purge solenoid system. The PCM controls vapor flow by operating the purge solenoid. Refer to Proportional Purge Solenoid in this section.

NOTE: The evaporative system uses specially manufactured hoses. If they need replacement, only use fuel resistant hose. Also the hoses must be able to pass an Ozone compliance test.

NOTE: For more information on Onboard Refueling Vapor Recovery (ORVR), refer to the Fuel Delivery section.

EVAPORATIVE EMISSIONS (Continued)

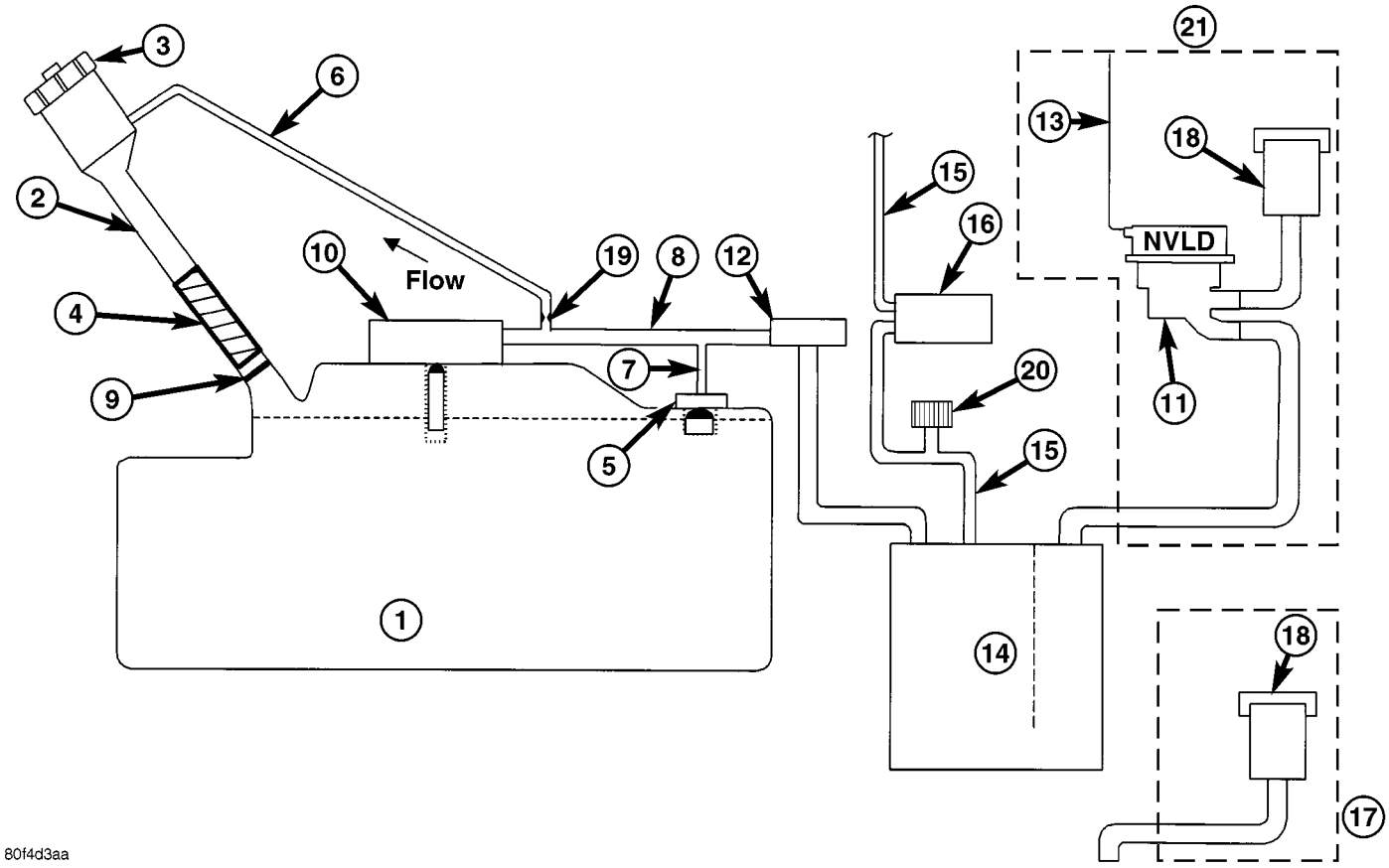

Fig. 1 ORVR System Schematic (PZEV)

1 - FUEL TANK (PLASTIC)
2 - FUEL FILLER TUBE
3 - FUEL CAP (PRESSURE/RELIEF)
4 - FILL TUBE TO FUEL TANK CONNECTOR (ELASTOMERIC)
5 - TANK VENT/ROLLOVER VALVE(S)
6 - VAPOR RECIRCULATION LINE
7 - TANK VAPOR LINE
8 - VAPOR LINE TO CANISTER
9 - CHECK VALVE (N/C)
10 - CONTROL VALVE
11 - NATURAL VACUUM LEAD DETECTION (NVLD)
12 - LIQUID SEPARATOR (IF EQUIPPED)
13 - ENGINE WIRING HARNESS TO NVLD
14 - VAPOR CANISTER
15 - PURGE LINE
16 - PURGE DEVICE
17 - WITHOUT NVLD
18 - BREATHER ELEMENT
19 - FLOW CONTROL ORIFICE
20 - SERVICE PORT
21 - WITH NVLD

SPECIFICATIONS

TORQUE

DESCRIPTION	N·m	Ft. Lbs.	In. Lbs.
PCV VAlve 3.3/3.8L	6.3		55

EVAP/PURGE SOLENOID

DESCRIPTION

All vehicles use a proportional purge solenoid (Fig. 2). The solenoid regulates the rate of vapor flow from the EVAP canister to the throttle body. The PCM operates the solenoid.

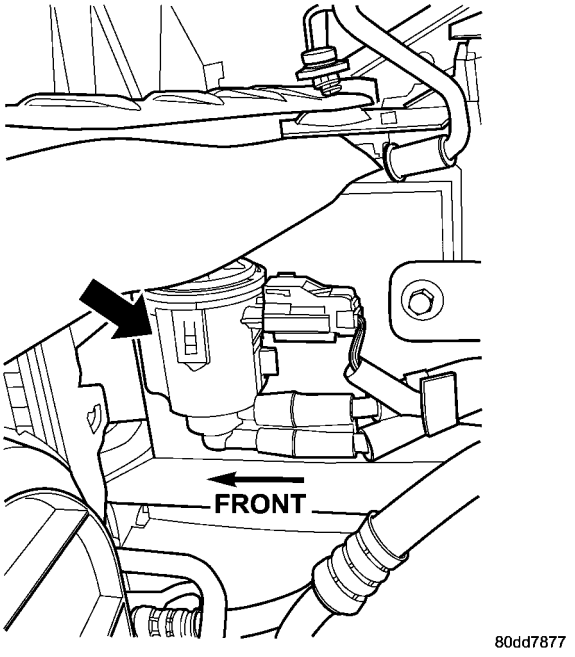

Fig. 2 Proportional Purge Solenoid

OPERATION

During the cold start warm-up period and the hot start time delay, the PCM does not energize the solenoid. When de-energized, no vapors are purged.

The proportional purge solenoid operates at a frequency of 200 hz and is controlled by an engine controller circuit that senses the current being applied to the proportional purge solenoid and then adjusts that current to achieve the desired purge flow. The proportional purge solenoid controls the purge rate of fuel vapors from the vapor canister and fuel tank to the engine intake manifold.

REMOVAL

The solenoid attaches to a bracket near the radiator on the passenger side of vehicle (Fig. 3). The solenoid will not operate unless it is installed correctly.

(1) Disconnect electrical connector from solenoid.
(2) Disconnect vacuum tubes from solenoid.
(3) Remove solenoid from bracket.

INSTALLATION

The solenoid attaches to a bracket near the radiator on the passenger side of vehicle. The solenoid will not operate unless it is installed correctly.

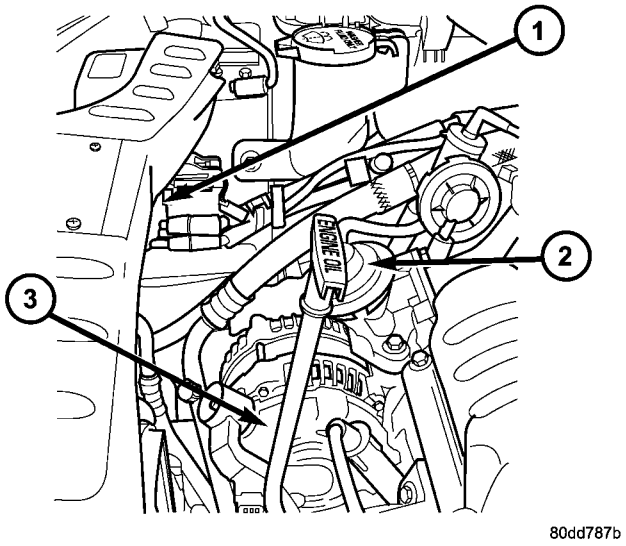

Fig. 3 EVAP PURGE SOLENOID

1 - EVAP Purge Solenoid
2 - EGR VAlve
3 - Generator

The top of the solenoid has TOP printed on it. The solenoid will not operate unless it is installed correctly.

(1) Install solenoid on bracket.
(2) Connect vacuum tube to solenoid.
(3) Connect electrical connector to solenoid.

FUEL FILLER CAP

DESCRIPTION

The plastic fuel fill cap is threaded/quarter turn onto the end of the fuel filler tube. It's purpose is to retain vapors and fuel in the fuel tank.

OPERATION

The fuel filler cap incorporates a two-way relief valve that is closed to atmosphere during normal operating conditions. The relief valve is calibrated to open when a pressure of 17 kPa (2.5 psi) or vacuum of 2 kPa (0.6 in. Hg) occurs in the fuel tank. When the pressure or vacuum is relieved, the valve returns to the normally closed position.

CAUTION: Remove the fuel filler cap to release fuel tank pressure before disconnecting any fuel system component.

NATURAL VAC LEAK DETECTION ASSY

REMOVAL

(1) Disconnect thew negative battery cable.
(2) Raise vehicle and support (Fig. 4).

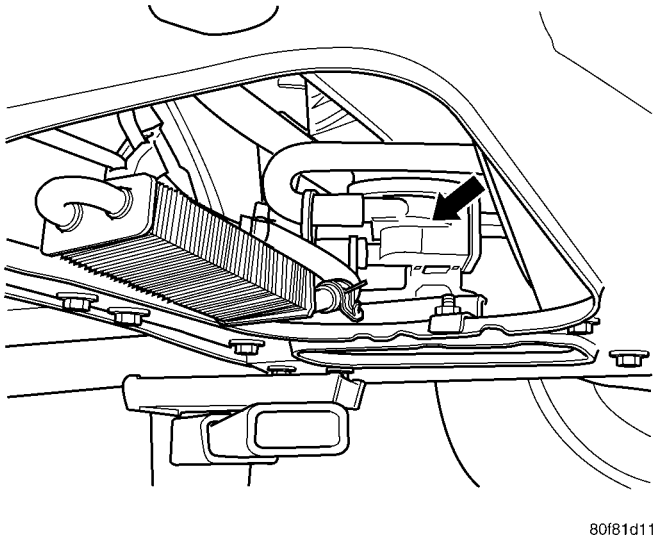

Fig. 4 NVLD LOCATION

(3) Unlock and disconnect the electrical connector.
(4) Remove the hoses from the NVLD valve.
(5) Remove the 2 fasteners.
(6) Remove the valve and bracket from vehicle (Fig. 5).
(7) Remove valve from bracket (Fig. 6).

INSTALLATION

(1) Install NVLD valve to the bracket (Fig. 6).
(2) Install valve and bracket to the vehicle (Fig. 5).
(3) Install the 2 mounting bolts and tighten.
(4) Install the electrical connector and lock.
(5) Install the 2 hoses and lock the clamps.
(6) Lower vehicle.

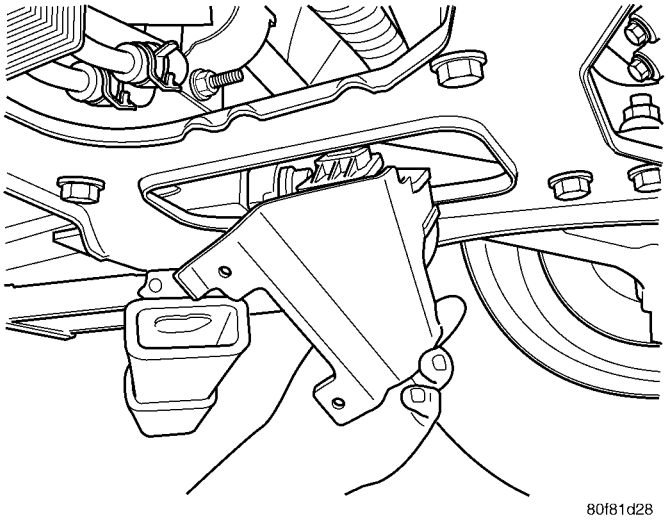

Fig. 5 NVLD REMOVAL/INSTALLATION

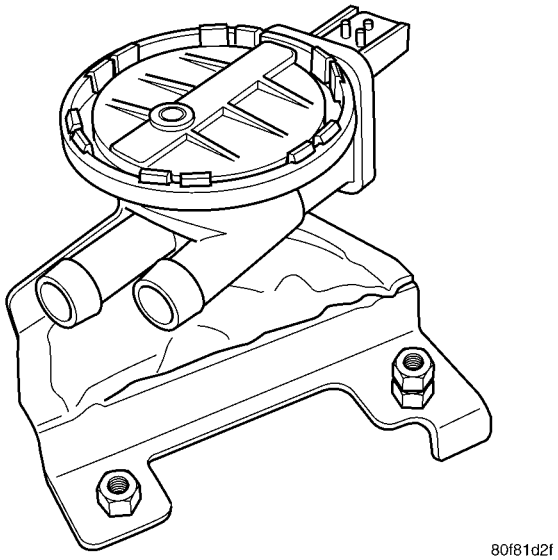

Fig. 6 NVLD VALVE AND BRACKET

LEAK DETECTION PUMP

REMOVAL

(1) Disconnect the negative battery cable.
(2) Raise and support the vehicle.

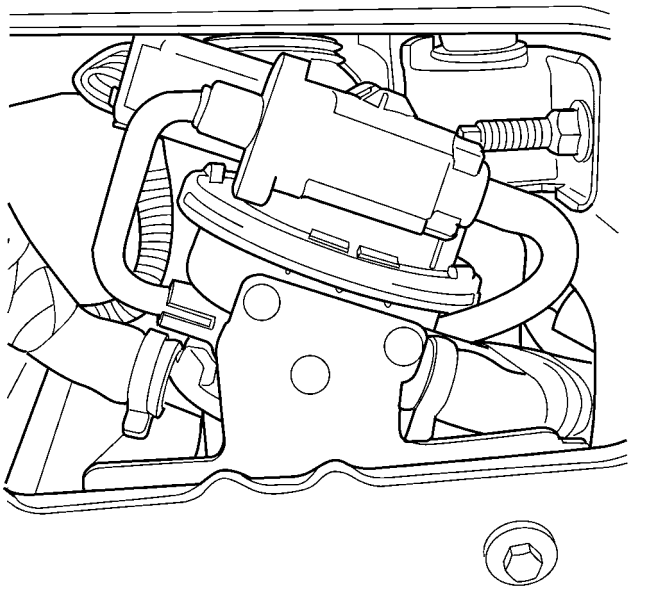

Fig. 7 LDP LOCATION

(3) Remove 3 hoses (Fig. 7).
(4) Remove the electrical connector (Fig. 8).

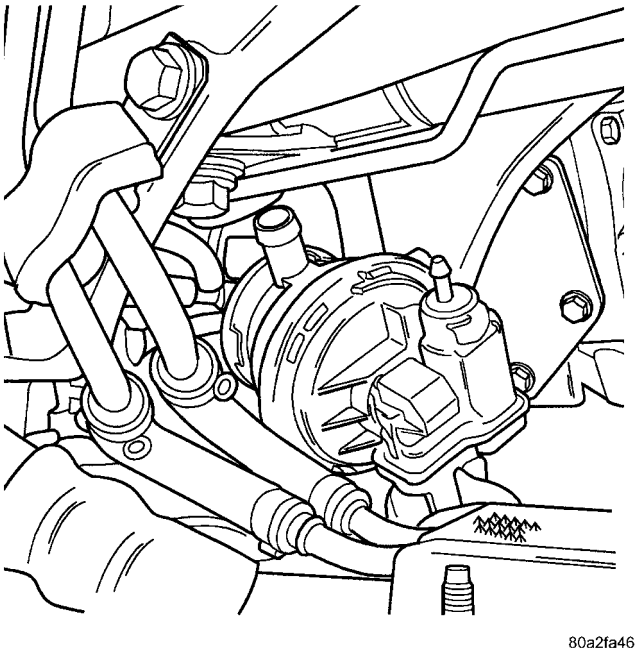

Fig. 8 LDP REMOVAL/INSTALLATION

(5) Remove the 3 screws and remove LDP pump.

INSTALLATION

(1) Install LDP.
(2) Install the 3 screws and tighten (Fig. 8).
(3) Install the electrical connector.
(4) Install the 3 hoses (Fig. 7).
(5) Lower vehicle.
(6) Connect the negative battery cable.

ORVR

OPERATION

The emission control principle used in the ORVR system is that the fuel flowing into the filler tube (appx. 1" I.D.) creates an aspiration effect which draws air into the fill tube (Fig. 9). During refueling, the fuel tank is vented to the vapor canister to capture escaping vapors. With air flowing into the filler tube, there are no fuel vapors escaping to the atmosphere. Once the refueling vapors are captured by the canister, the vehicle's computer controlled purge system draws vapor out of the canister for the engine to burn. The vapors flow is metered by the purge solenoid so that there is no or minimal impact on driveability or tailpipe emissions.

As fuel starts to flow through the fill tube, it opens the normally closed check valve and enters the fuel tank. Vapor or air is expelled from the tank through the control valve to the vapor canister. Vapor is absorbed in the canister until vapor flow in the lines stops, either following shut-off or by having the fuel level in the tank rise high enough to close the control valve. The control valve(Refer to 14 - FUEL SYSTEM/FUEL DELIVERY/FUEL TANK - OPERATION) contains a float that rises to seal the large diameter vent path to the canister. At this point in the fueling of the vehicle, the tank pressure increases, the check valve closes (preventing tank fuel from spitting back at the operator), and fuel then rises up the filler tube to shut-off the dispensing nozzle.

If the engine is shut-off while the On-Board diagnostics test is running, low level tank pressure can be trapped in the fuel tank and fuel can not be added to the tank until the pressure is relieved. This is due to the leak detection pump closing the vapor outlet from the top of the tank and the one-way check valve not allowing the tank to vent through the fill tube to atmosphere. Therefore, when fuel is added, it will back-up in the fill tube and shut off the dispensing nozzle. The pressure can be eliminated in two ways: 1. Vehicle purge must be activated and for a long enough period to eliminate the pressure. 2. Removing the fuel cap and allowing enough time for the system to vent thru the recirulation tube.

ORVR (Continued)

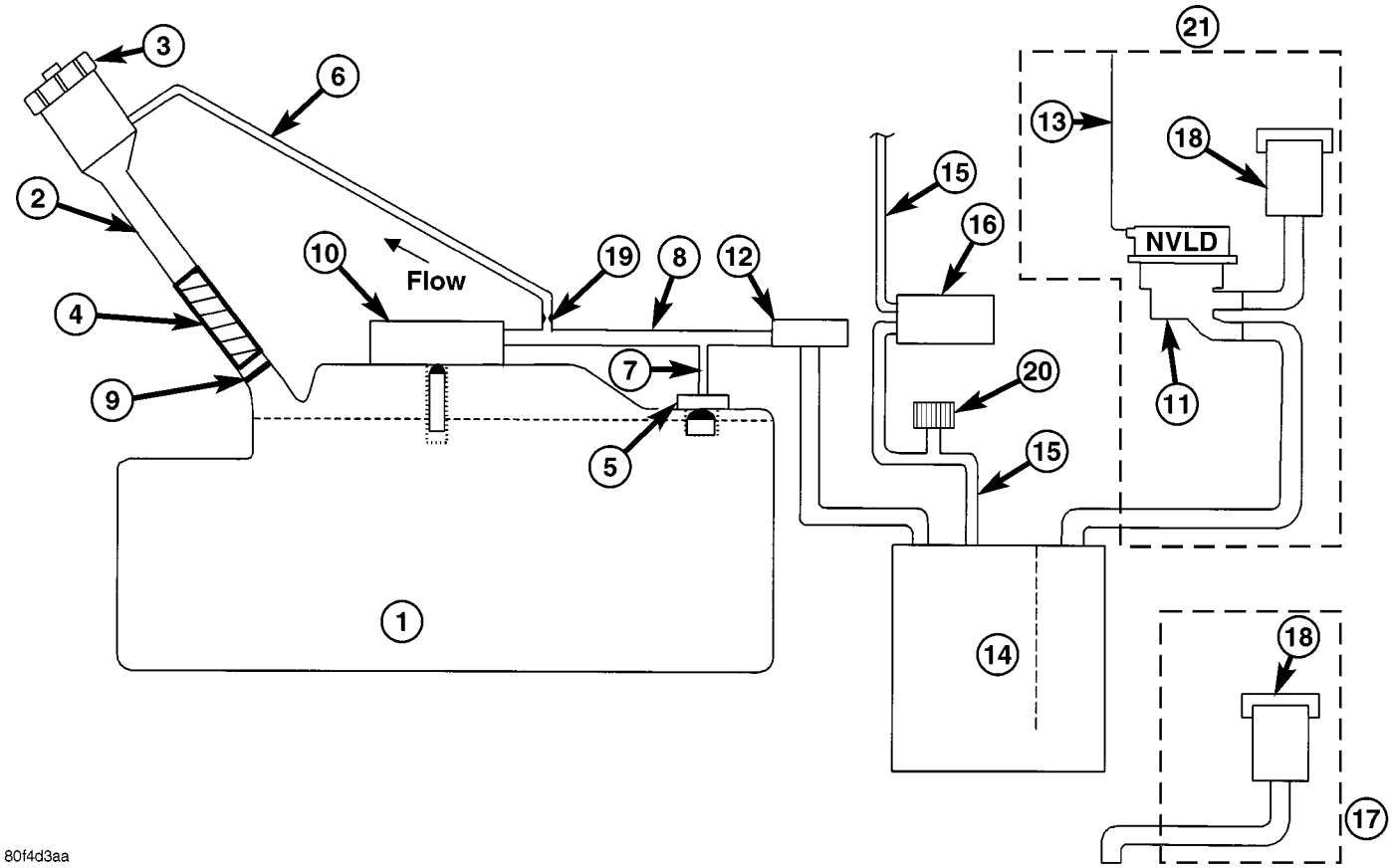

Fig. 9 ORVR System Schematic

1 - FUEL TANK (PLASTIC)
2 - FUEL FILLER TUBE
3 - FUEL CAP (PRESSURE/RELIEF)
4 - FILL TUBE TO FUEL TANK CONNECTOR (ELASTOMERIC)
5 - TANK VENT/ROLLOVER VALVE(S)
6 - VAPOR RECIRCULATION LINE
7 - TANK VAPOR LINE
8 - VAPOR LINE TO CANISTER
9 - CHECK VALVE (N/C)
10 - CONTROL VALVE
11 - NATURAL VACUUM LEAD DETECTION (NVLD)
12 - LIQUID SEPARATOR (IF EQUIPPED)
13 - ENGINE WIRING HARNESS TO NVLD
14 - VAPOR CANISTER
15 - PURGE LINE
16 - PURGE DEVICE
17 - WITHOUT NVLD
18 - BREATHER ELEMENT
19 - FLOW CONTROL ORIFICE
20 - SERVICE PORT
21 - WITH NVLD

ORVR (Continued)

DIAGNOSIS AND TESTING - VEHICLE DOES NOT FILL

CONDITION	POSSIBLE CAUSES	CORRECTION
Pre-Mature Nozzle Shut-Off	Defective fuel tank assembly components.	Fill tube improperly installed (sump) Fill tube hose pinched. Check valve stuck shut. Control valve stuck shut.
	Defective vapor/vent components.	Vent line from control valve to canister pinched. Vent line from canister to vent filter pinched. Canister vent valve failure (requires double failure, plugged to NVLD and atmosphere). Leak detection pump failed closed. Leak detection pump filter plugged.
	On-Board diagnostics evaporative system leak test just conducted.	Canister vent valve vent plugged to atmosphere. Engine still running when attempting to fill (System designed not to fill).
	Defective fill nozzle.	Try another nozzle.
Fuel Spits Out Of Filler Tube.	During fill.	See Pre-Mature Shut-Off.
	At conclusion of fill.	Defective fuel handling component. (Check valve stuck open).
		Defective vapor/vent handling component.
		Defective fill nozzle.

PCV VALVE

DESCRIPTION

The PCV valve contains a spring loaded plunger. The plunger meters the amount of crankcase vapors routed into the combustion chamber based on intake manifold vacuum (Fig. 10) or (Fig. 11).

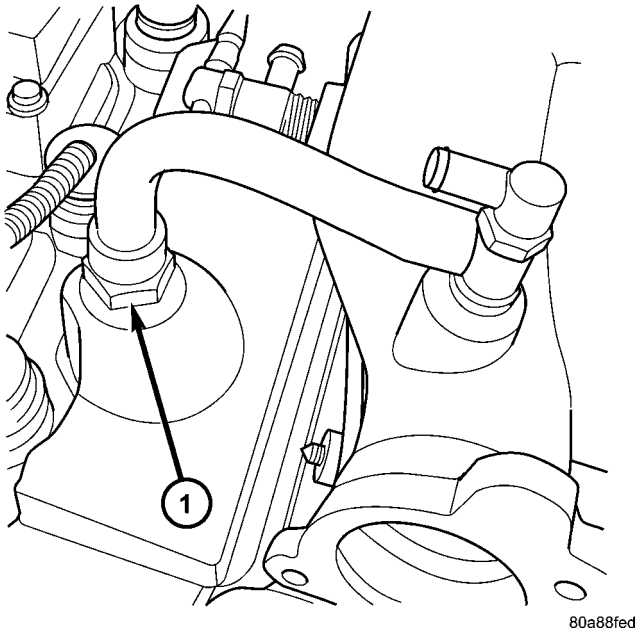

Fig. 10 PCV VALVE 2.4L

1 - PCV Valve

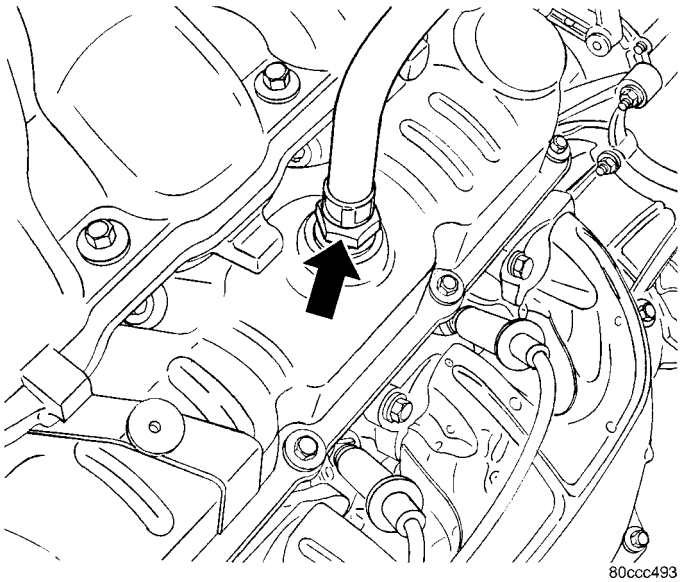

Fig. 11 PCV VALVE 3.3/3.8L

OPERATION

When the engine is not operating or during an engine backfire, the spring forces the plunger back against the seat. This prevents vapors from flowing through the valve (Fig. 12).

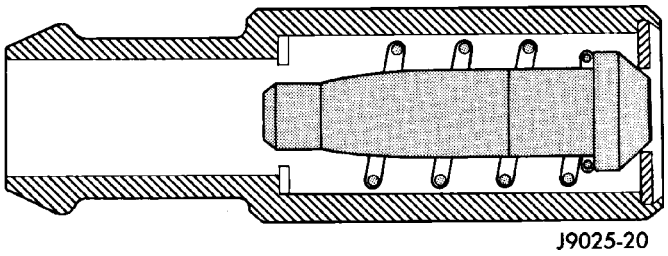

Fig. 12 Engine Off or Engine Backfire No Vapor Flow

When the engine is at idle or cruising, high manifold vacuum is present. At these times manifold vacuum is able to completely compress the spring and pull the plunger to the top of the valve (Fig. 13). In this position there is minimal vapor flow through the valve.

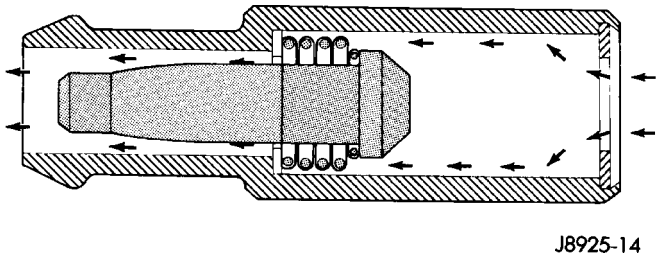

Fig. 13 High Intake Manifold Vacuum Minimal Vapor Flow

During periods of moderate intake manifold vacuum the plunger is only pulled part way back from the inlet. This results in maximum vapor flow through the valve (Fig. 14).

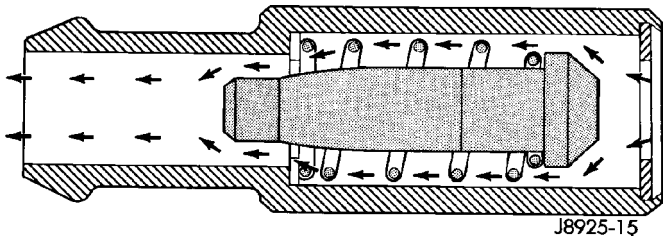

Fig. 14 Moderate Intake Manifold Vacuum Maximum Vapor Flow

DIAGNOSIS AND TESTING - PCV SYSTEM

WARNING: APPLY PARKING BRAKE AND/OR BLOCK WHEELS BEFORE PERFORMING ANY TEST OR ADJUSTMENT WITH THE ENGINE OPERATING.

(1) With engine idling, remove the hose from the PCV valve. If the valve is not plugged, a hissing noise will be heard as air passes through the valve. A strong vacuum should also be felt when a finger is placed over the valve inlet.

PCV VALVE (Continued)

(2) Install hose on PCV valve. Remove the make-up air hose from the air plenum at the rear of the engine. Hold a piece of stiff paper (parts tag) loosely over the end of the make-up air hose.

(3) After allowing approximately one minute for crankcase pressure to reduce, the paper should draw up against the hose with noticeable force. If the engine does not draw the paper against the grommet after installing a new valve, replace the PCV valve hose.

(4) Turn the engine off. Remove the PCV valve from intake manifold. The valve should rattle when shaken.

(5) Replace the PCV valve and retest the system if it does not operate as described in the preceding tests. **Do not attempt to clean the old PCV valve.** If the valve rattles, apply a light coating of Loctite® Pipe Sealant With Teflon to the threads. Thread the PCV valve into the manifold plenum and tighten to 7 N·m (60 in. lbs.) torque.

VAPOR CANISTER

DESCRIPTION

There are 2 EVAP canisters on the vehicle. The vacuum and vapor tubes connect to the top of the canister. It is a charcoal canister (Fig. 15) or (Fig. 16).

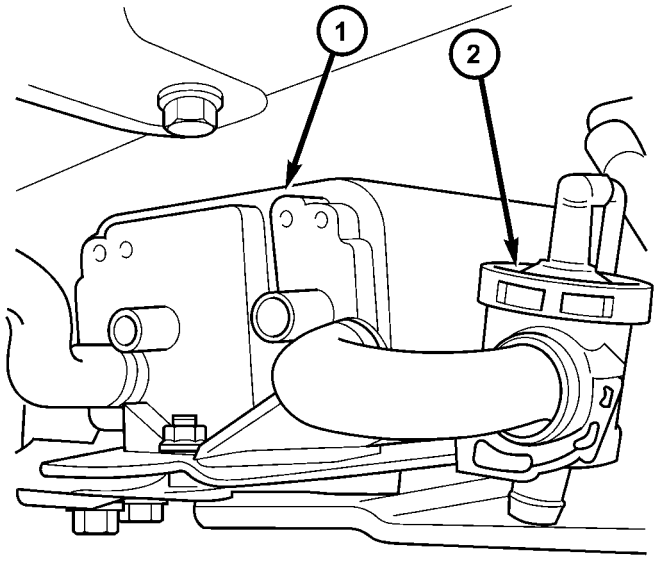

Fig. 15 FRONT EVAP CANISTER

1 - Front EVAP Canister
2 - Vent Valve

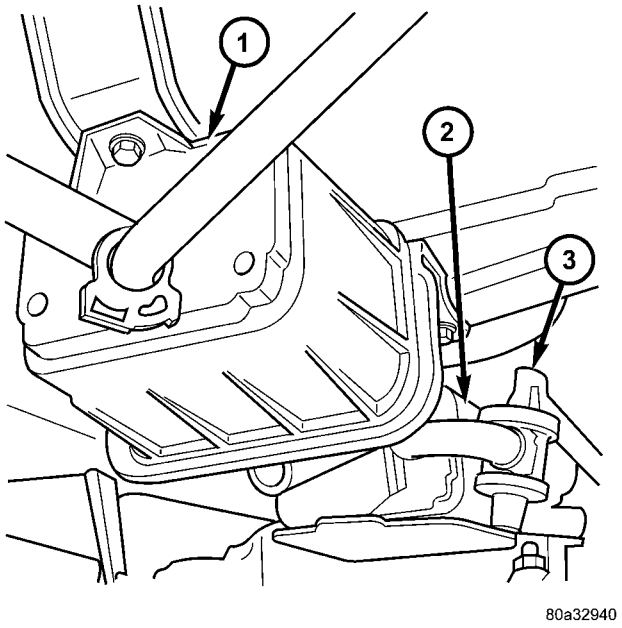

Fig. 16 REAR EVAP CANISTER

1 - Rear EVAP Canister
2 - Front EVAP Canister
3 - Vent Valve

OPERATION

All vehicles use a maintenance free, evaporative (EVAP) canister. Fuel tank vapors vent into the canister. The canister temporarily holds the fuel vapors until intake manifold vacuum draws them into the combustion chamber. The Powertrain Control Module (PCM) purges the canister through the proportional purge solenoid. The PCM purges the canister at predetermined intervals and engine conditions.

Purge Free Cells

Purge-free memory cells are used to identify the fuel vapor content of the evaporative canister. Since the evaporative canister is not purged 100% of the time, the PCM stores information about the evaporative canister's vapor content in a memory cell.

The purge-free cells are constructed similar to certain purge-normal cells. The purge-free cells can be monitored by the DRB III® Scan Tool. The only difference between the purge-free cells and normal adaptive cells is that in purge-free, the purge is completely turned off. This gives the PCM the ability to compare purge and purge-free operation.

REMOVAL

REMOVAL

(1) Raise and support the vehicle.
(2) Remove the 2 hoses (Fig. 15).
(3) Remove bolt.
(4) Pull canister rearward to remove.

VAPOR CANISTER (Continued)

REMOVAL - WITH NVLD - FOLD-IN-FLOOR

(1) Raise and support the vehicle.

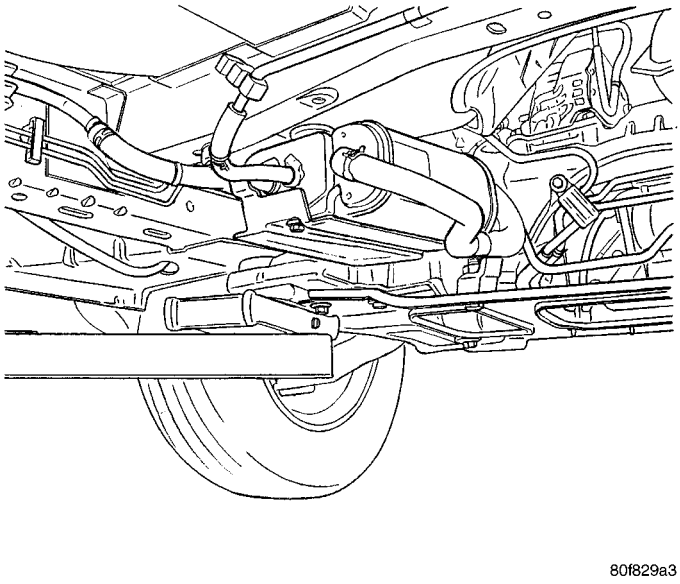

VAPOR CANISTER LOCATION

(2) Remove the 3 hoses.
(3) Remove bolt (Fig. 17).

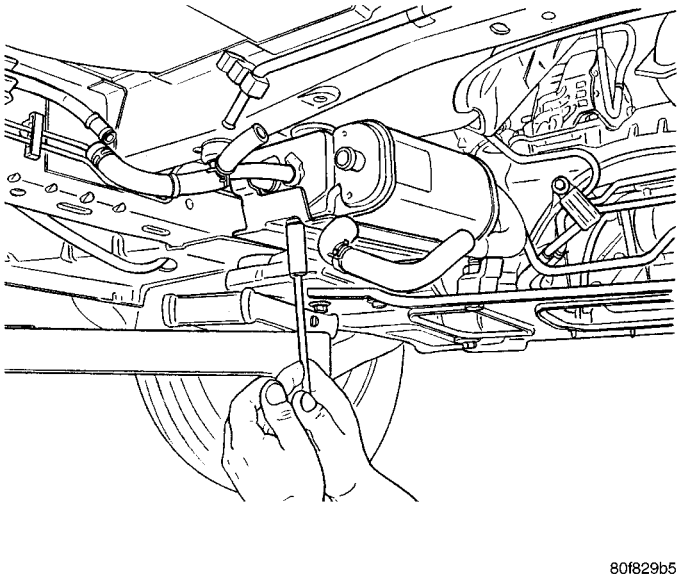

Fig. 17 MOUNTING BOLT

(4) Pull canister rearward to remove.

REMOVAL - REAR EVAP CANISTER

(1) Raise and support the vehicle.
(2) Remove 3 hoses (Fig. 16).
(3) Remove the bolt.
(4) Pull rearward to remove canister.

INSTALLATION

INSTALLATION

(1) Install canister arrow heads into the rubber gromments (Fig. 18)

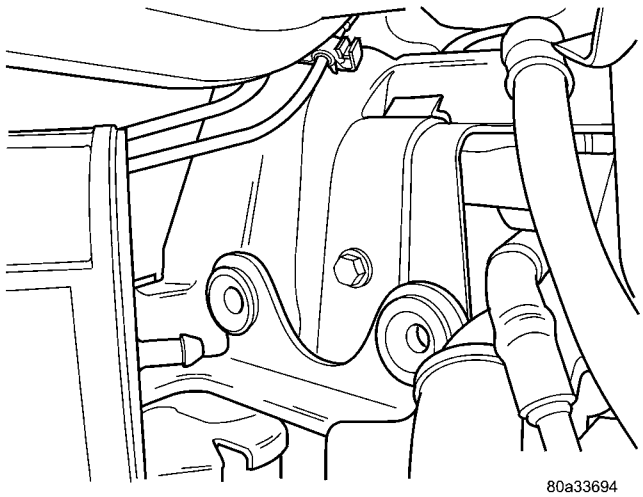

Fig. 18 FRONT EVAP CANISTER BRACKET

(2) Install bolt and tighten.
(3) Install hoses.
(4) Lower vehicle.

INSTALLATION - WITH NVLD - FOLD-IN-FLOOR

(1) Install canister arrow heads into the rubber gromments (Fig. 19).

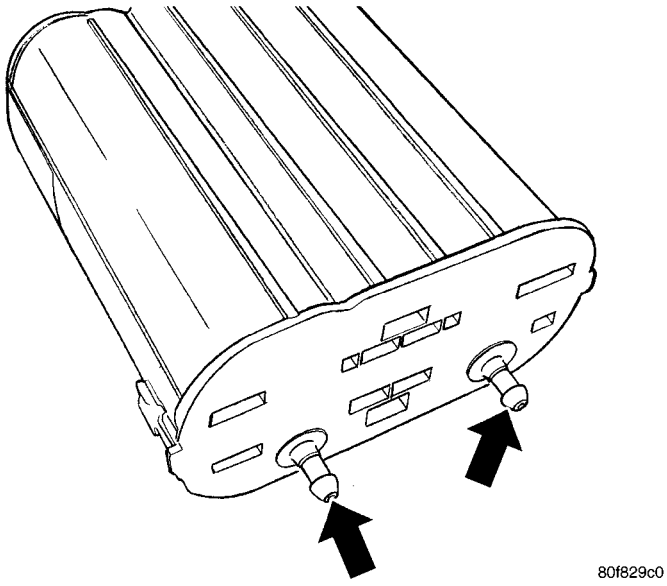

Fig. 19 CANISTER MOUNTING STUDS

(2) Install bolt and tighten.
(3) Install hoses.
(4) Lower vehicle.

VAPOR CANISTER (Continued)

INSTALLATION - REAR EVAP CANISTER

(1) Install canister arrow heads into the rubber grommets (Fig. 20).
(2) Install bolt and tighten.
(3) Install hoses.
(4) Lower vehicle.

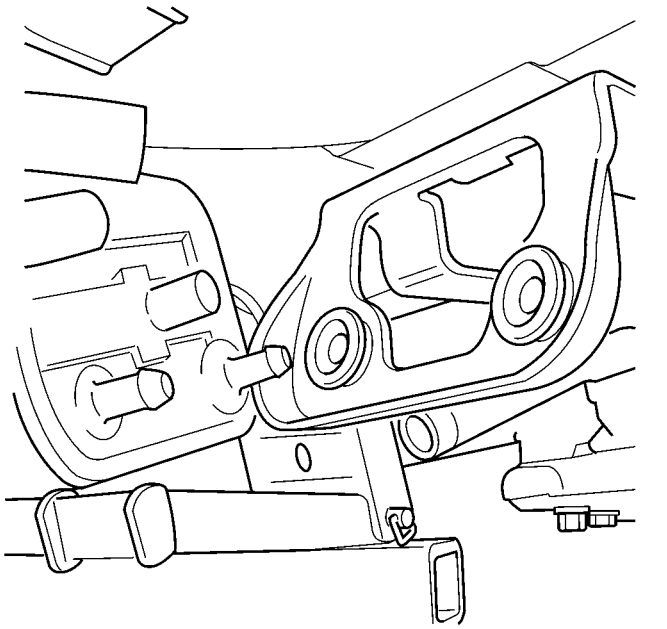

Fig. 20 REAR EVAP CANISTER BRACKET

EXHAUST GAS RECIRCULATION

TABLE OF CONTENTS

page

EXHAUST GAS RECIRCULATION
SPECIFICATIONS
TORQUE 22
TUBE
REMOVAL - 2.4L 22
INSTALLATION - 2.4L 22

page

VALVE
DESCRIPTION 23
OPERATION 23
REMOVAL - 2.4L 24
INSTALLATION - 2.4L 24

EXHAUST GAS RECIRCULATION

SPECIFICATIONS

TORQUE

DESCRIPTION	N·m	Ft. Lbs.	In. Lbs.
EGR valve to cyl. head 2.4L	22	-	200 ±25
EGR tube to EGR valve 2.4L	11.9	-	105 ±20
EGR tube to intake manifold 2.4L	11.9	-	105 ±20
EGR valve to adaptor 3.3/3.8L	22	-	200 ±25
EGR tube to EGR valve 3.3/3.8L	11.9	-	105 ±20
EGR tube to intake manifold 3.3L	5.6	-	50 ±10
EGR tube to intake manifold 3.8L	11.9	-	105 ±20

TUBE

REMOVAL - 2.4L

(1) Remove EGR tube attaching bolts at intake manifold.

(2) Remove EGR tube attaching bolts at EGR valve.

(3) Check for signs of leakage or cracked surfaces on either the manifold or tube. Repair or replace as necessary.

INSTALLATION - 2.4L

(1) Loose install EGR tube and gasket with attaching bolts at intake manifold.

(2) Loose install EGR tube and gasket with attaching bolts at EGR valve.

(3) Tighten bolts to EGR valve to 11.9 N·m (105 ±20 ins. lbs.).

(4) Tighten bolts to Intake manifold to 11.9 N·m (105 ±20 ins. lbs.).

VALVE

DESCRIPTION

The EGR system consists of:

- EGR tube (connects a passage in the intake manifold to the exhaust port in the cylinder head)
- EGR valve
- Electronic EGR Transducer
- Connecting hoses

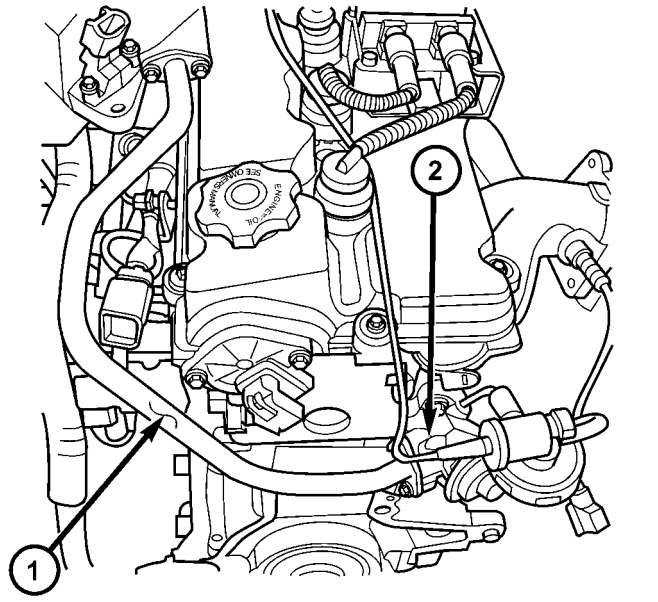

Fig. 1 EGR VALVE AND TUBE 2.4L

1 - EGR Tube
2 - EGR Valve

OPERATION

Refer to Monitored Systems - EGR Monitor in this group for more information.

The engines use Exhaust Gas Recirculation (EGR) systems. The EGR system reduces oxides of nitrogen (NOx) in engine exhaust and helps prevent detonation (engine knock). Under normal operating conditions, engine cylinder temperature can reach more than 3000°F. Formation of NOx increases proportionally with combustion temperature. To reduce the emission of these oxides, the cylinder temperature must be lowered. The system allows a predetermined amount of hot exhaust gas to recirculate and dilute the incoming air/fuel mixture. The diluted air/fuel mixture reduces peak flame temperature during combustion.

The electric EGR transducer contains an electrically operated solenoid and a back-pressure transducer (Fig. 2). The Powertrain Control Module (PCM) operates the solenoid. The PCM determines when to energize the solenoid. Exhaust system back-pressure controls the transducer.

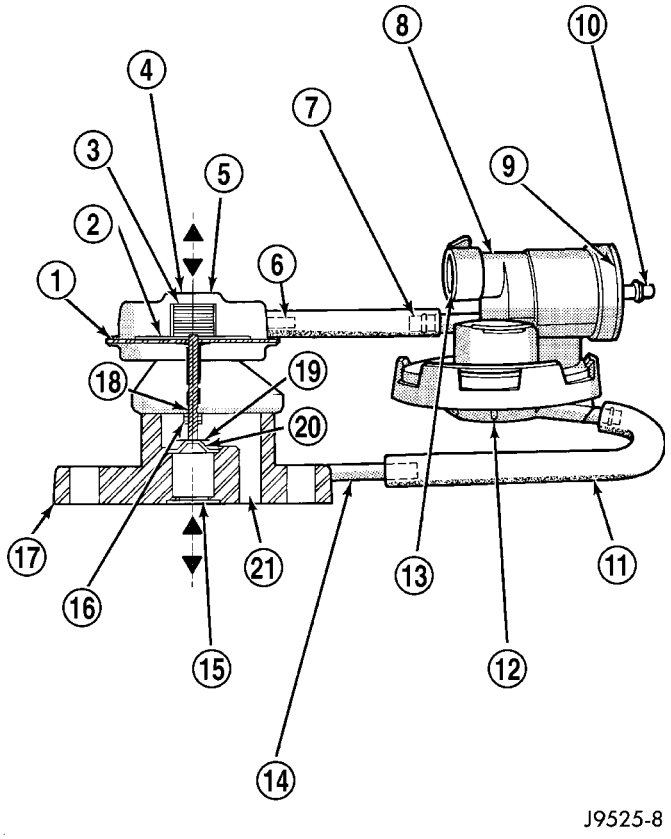

Fig. 2 EGR Valve and Transducer - Typical

1 - DIAPHRAGM
2 - PISTON
3 - SPRING
4 - EGR VALVE ASSEMBLY
5 - VACUUM MOTOR
6 - VACUUM MOTOR FITTING
7 - VACUUM OUTLET FITTING TO EGR VALVE
8 - EGR VALVE CONTROL ASSEMBLY
9 - ELECTRIC SOLENOID PORTION OF VALVE CONTROL
10 - VACUUM INLET FITTING FROM ENGINE
11 - BACK-PRESSURE HOSE
12 - TRANSDUCER PORTION OF VALVE CONTROL
13 - ELECTRICAL CONNECTION POINT
14 - EGR VALVE BACK-PRESSURE FITTING
15 - EXHAUST GAS INLET
16 - STEM PROTECTOR AND BUSHING
17 - BASE
18 - MOVEMENT INDICATOR
19 - POPPET VALVE
20 - SEAT
21 - EXHAUST GAS OUTLET

When the PCM energizes the solenoid, vacuum does not reach the transducer. Vacuum flows to the transducer when the PCM de-energizes the solenoid.

When exhaust system back-pressure becomes high enough, it fully closes a bleed valve in the transducer. When the PCM de-energizes the solenoid and back-pressure closes the transducer bleed valve, vacuum flows through the transducer to operate the EGR valve.

VALVE (Continued)

De-energizing the solenoid, but not fully closing the transducer bleed hole (because of low back-pressure), varies the strength of vacuum applied to the EGR valve. Varying the strength of the vacuum changes the amount of EGR supplied to the engine. This provides the correct amount of exhaust gas recirculation for different operating conditions.

This system does not allow EGR at idle.

A failed or malfunctioning EGR system can cause engine spark knock, sags or hesitation, rough idle, engine stalling and increased emissions.

REMOVAL - 2.4L

The EGR valve and Electrical EGR Transducer are serviced as an assembly (Fig. 1).

(1) Disconnect vacuum tube from electric EGR transducer. Inspect vacuum tube for damage.

(2) Remove electrical connector from solenoid.

(3) Remove EGR tube bolts from EGR valve.

(4) Remove EGR valve from cylinder head adaptor.

(5) Clean gasket surface and discard old gasket. Check for any signs of leakage or cracked surfaces. Repair or replace as necessary.

INSTALLATION - 2.4L

The EGR valve and Electrical EGR Transducer are serviced as an assembly (Fig. 1).

(1) Assemble EGR valve with new gasket onto the cylinder head adaptor.

(2) Loose assemble the bolts from EGR valve to EGR tube.

(3) Loose assemble the bolts from EGR valve to cylinder head.

(4) Tighten bolts from EGR valve to cylinder head to 22.8 N·m (200 ±25 in. lbs.) torque.

(5) Tighten bolts from EGR valve to EGR tube to 11.9 N·m (105 ±20 in. lbs.) torque.

(6) Reconnect vacuum hose and electrical connector to electrical EGR transducer.

ON-BOARD DIAGNOSTICS

TABLE OF CONTENTS

page

TASK MANAGER
DESCRIPTION 25
OPERATION 25

TASK MANAGER

DESCRIPTION

The PCM is responsible for efficiently coordinating the operation of all the emissions-related components. The PCM is also responsible for determining if the diagnostic systems are operating properly. The software designed to carry out these responsibilities is call the “Task Manager”.

OPERATION

The Task Manager determines when tests happen and when functions occur. Many of the diagnostic steps required by OBD II must be performed under specific operating conditions. The Task Manager software organizes and prioritizes the diagnostic procedures. The job of the Task Manager is to determine if conditions are appropriate for tests to be run, monitor the parameters for a trip for each test, and record the results of the test. Following are the responsibilities of the Task Manager software:

- Test Sequence
- MIL Illumination
- Diagnostic Trouble Codes (DTCs)
- Trip Indicator
- Freeze Frame Data Storage
- Similar Conditions Window

Test Sequence

In many instances, emissions systems must fail diagnostic tests more than once before the PCM illuminates the MIL. These tests are known as 'two trip monitors.' Other tests that turn the MIL lamp on after a single failure are known as 'one trip monitors.' A trip is defined as 'start the vehicle and operate it to meet the criteria necessary to run the given monitor.'

Many of the diagnostic tests must be performed under certain operating conditions. However, there are times when tests cannot be run because another test is in progress (conflict), another test has failed (pending) or the Task Manager has set a fault that may cause a failure of the test (suspend).

- **Pending**

Under some situations the Task Manager will not run a monitor if the MIL is illuminated and a fault is stored from another monitor. In these situations, the Task Manager postpones monitors **pending** resolution of the original fault. The Task Manager does not run the test until the problem is remedied.

For example, when the MIL is illuminated for an Oxygen Sensor fault, the Task Manager does not run the Catalyst Monitor until the Oxygen Sensor fault is remedied. Since the Catalyst Monitor is based on signals from the Oxygen Sensor, running the test would produce inaccurate results.

- **Conflict**

There are situations when the Task Manager does not run a test if another monitor is in progress. In these situations, the effects of another monitor running could result in an erroneous failure. If this **conflict** is present, the monitor is not run until the conflicting condition passes. Most likely the monitor will run later after the conflicting monitor has passed.

For example, if the Fuel System Monitor is in progress, the Task Manager does not run the catalyst Monitor. Since both tests monitor changes in air/fuel ratio and adaptive fuel compensation, the monitors will conflict with each other.

- **Suspend**

Occasionally the Task Manager may not allow a two trip fault to mature. The Task Manager will **suspend** the maturing of a fault if a condition exists that may induce an erroneous failure. This prevents illuminating the MIL for the wrong fault and allows more precise diagnosis.

For example, if the PCM is storing a one trip fault for the Oxygen Sensor and the catalyst monitor, the Task Manager may still run the catalyst Monitor but will suspend the results until the Oxygen Sensor Monitor either passes or fails. At that point the Task Manager can determine if the catalyst system is actually failing or if an Oxygen Sensor is failing.

MIL Illumination

The PCM Task Manager carries out the illumination of the MIL. The Task Manager triggers MIL illumination upon test failure, depending on monitor failure criteria.

TASK MANAGER (Continued)

The Task Manager Screen shows both a Requested MIL state and an Actual MIL state. When the MIL is illuminated upon completion of a test for a good trip, the Requested MIL state changes to OFF. However, the MIL remains illuminated until the next key cycle. (On some vehicles, the MIL will actually turn OFF during the thirdgood trip) During the key cycle for the third good trip, the Requested MIL state is OFF, while the Actual MIL state is ON. After the next key cycle, the MIL is not illuminated and both MIL states read OFF.

Diagnostic Trouble Codes (DTCs)

With OBD II, different DTC faults have different priorities according to regulations. As a result, the priorities determine MIL illumination and DTC erasure. DTCs are entered according to individual priority. DTCs with a higher priority overwrite lower priority DTCs.

Priorities

- Priority 0 —Non-emissions related trouble codes.
- Priority 1 — One trip failure of a two trip fault for non-fuel system and non-misfire. (MIL Off)
- Priority 2 — One trip failure of a two trip fault for fuel system (rich/lean) or misfire. (MIL Off)
- Priority 3 — Two trip failure for a non-fuel system and non-misfire or matured one trip comprehensive component fault. (MIL On)
- Priority 4 — Two trip failure or matured fault for fuel system (rich/lean) and misfire or one trip catalyst damaging misfire. Catalyst damage misfire is a 2 trip MIL. The MIL flashes on the first trip when catalyst damage misfire levels are present. (MIL On)

Non-emissions related failures have no priority. One trip failures of two trip faults have low priority. Two trip failures or matured faults have higher priority. One and two trip failures of fuel system and misfire monitor take precedence over non-fuel system and non-misfire failures.

DTC Self Erasure

With one trip components or systems, the MIL is illuminated upon test failure and DTCs are stored.

Two trip monitors are components requiring failure in two consecutive trips for MIL illumination. Upon failure of the first test, the Task Manager enters a maturing code. If the component fails the test for a second time the code matures and a DTC is set.

After three good trips the MIL is extinguished and the Task Manager automatically switches the trip counter to a warm-up cycle counter. DTCs are automatically erased following 40 warm-up cycles if the component does not fail again.

For misfire and fuel system monitors, the component must pass the test under a Similar Conditions Window in order to record a good trip. A Similar Conditions Window is when engine RPM is within ±375 RPM and load is within ±20% of when the fault occurred.

NOTE: It is important to understand that a component does not have to fail under a similar window of operation to mature. It must pass the test under a Similar Conditions Window when it failed to record a Good Trip for DTC erasure for misfire and fuel system monitors.

DTCs can be erased anytime with a scan tool. Erasing the DTC with the scan tool erases all OBD II information. The scan tool automatically displays a warning that erasing the DTC will also erase all OBD II monitor data. This includes all counter information for warm-up cycles, trips and Freeze Frame.

Trip Indicator

The **Trip** is essential for running monitors and extinguishing the MIL. In OBD II terms, a trip is a set of vehicle operating conditions that must be met for a specific monitor to run. All trips begin with a key cycle.

Good Trip

The Good Trip counters are as follows:

- Global Good Trip
- Fuel System Good Trip
- Misfire Good Trip
- Alternate Good Trip (appears as a Global Good Trip on scan tool)
  - Comprehensive Components
  - Major Monitor
- Warm-Up Cycles

Global Good Trip

To increment a Global Good Trip, the Oxygen sensor and Catalyst efficiency monitors must have run and passed, and 2 minutes of engine run time.

Fuel System Good Trip

To count a good trip (three required) and turn off the MIL, the following conditions must occur:

- Engine in closed loop
- Operating in Similar Conditions Window
- Short Term multiplied by Long Term less than threshold
- Less than threshold for a predetermined time

If all of the previous criteria are met, the PCM will count a good trip (three required) and turn off the MIL.

Misfire Good Trip

If the following conditions are met the PCM will count one good trip (three required) in order to turn off the MIL:

- Operating in Similar Condition Window
- 1000 engine revolutions with no misfire

TASK MANAGER (Continued)

Alternate Good Trip

Alternate Good Trips are used in place of Global Good Trips for Comprehensive Components and Major Monitors. If the Task Manager cannot run a Global Good Trip because a component fault is stopping the monitor from running, it will attempt to count an Alternate Good Trip.

The Task Manager counts an Alternate Good Trip for Comprehensive components when the following conditions are met:

- Two minutes of engine run time, idle or driving
- No other faults occur

The Task Manager counts an Alternate Good Trip for a Major Monitor when the monitor runs and passes. Only the Major Monitor that failed needs to pass to count an Alternate Good Trip.

Warm-Up Cycles

Once the MIL has been extinguished by the Good Trip Counter, the PCM automatically switches to a Warm-Up Cycle Counter that can be viewed on the scan tool. Warm-Up Cycles are used to erase DTCs and Freeze Frames. Forty Warm-Up cycles must occur in order for the PCM to self-erase a DTC and Freeze Frame. A Warm-Up Cycle is defined as follows:

- Engine coolant temperature must start below and rise above 160° F
- Engine coolant temperature must rise by 40° F
- No further faults occur

Freeze Frame Data Storage

Once a failure occurs, the Task Manager records several engine operating conditions and stores it in a Freeze Frame. The Freeze Frame is considered one frame of information taken by an on-board data recorder. When a fault occurs, the PCM stores the input data from various sensors so that technicians can determine under what vehicle operating conditions the failure occurred.

The data stored in Freeze Frame is usually recorded when a system fails the first time for two trip faults. Freeze Frame data will only be overwritten by a different fault with a higher priority.

CAUTION: Erasing DTCs, either with the scan tool; or by disconnecting the battery, also clears all Freeze Frame data.

Similar Conditions Window

The Similar Conditions Window displays information about engine operation during a monitor. Absolute MAP (engine load) and Engine RPM are stored in this window when a failure occurs. There are two different Similar conditions Windows: Fuel System and Misfire.

FUEL SYSTEM

- **Fuel System Similar Conditions Window** — An indicator that 'Absolute MAP When Fuel Sys Fail' and 'RPM When Fuel Sys Failed' are all in the same range when the failure occurred. Indicated by switching from 'NO' to 'YES'.
- **Absolute MAP When Fuel Sys Fail** — The stored MAP reading at the time of failure. Informs the user at what engine load the failure occurred.
- **Absolute MAP** — A live reading of engine load to aid the user in accessing the Similar Conditions Window.
- **RPM When Fuel Sys Fail** — The stored RPM reading at the time of failure. Informs the user at what engine RPM the failure occurred.
- **Engine RPM** — A live reading of engine RPM to aid the user in accessing the Similar Conditions Window.
- **Adaptive Memory Factor** — The PCM utilizes both Short Term Compensation and Long Term Adaptive to calculate the Adaptive Memory Factor for total fuel correction.
- **Upstream O2S Volts** — A live reading of the Oxygen Sensor to indicate its performance. For example, stuck lean, stuck rich, etc.
- **SCW Time in Window (Similar Conditions Window Time in Window)** — A timer used by the PCM that indicates that, after all Similar Conditions have been met, if there has been enough good engine running time in the SCW without failure detected. This timer is used to increment a Good Trip.
- **Fuel System Good Trip Counter** — A Trip Counter used to turn OFF the MIL for Fuel System DTCs. To increment a Fuel System Good Trip, the engine must be in the Similar Conditions Window, Adaptive Memory Factor must be less than calibrated threshold and the Adaptive Memory Factor must stay below that threshold for a calibrated amount of time.
- **Test Done This Trip** — Indicates that the monitor has already been run and completed during the current trip.

MISFIRE

- **Same Misfire Warm-Up State** — Indicates if the misfire occurred when the engine was warmed up (above 160° F).
- **In Similar Misfire Window** — An indicator that 'Absolute MAP When Misfire Occurred' and 'RPM When Misfire Occurred' are all in the same range when the failure occurred. Indicated by switching from 'NO' to 'YES'.
- **Absolute MAP When Misfire Occurred** — The stored MAP reading at the time of failure. Informs the user at what engine load the failure occurred.

TASK MANAGER (Continued)

- **Absolute MAP** — A live reading of engine load to aid the user in accessing the Similar Conditions Window.
- **RPM When Misfire Occurred** — The stored RPM reading at the time of failure. Informs the user at what engine RPM the failure occurred.
- **Engine RPM** — A live reading of engine RPM to aid the user in accessing the Similar Conditions Window.
- **Adaptive Memory Factor** — The PCM utilizes both Short Term Compensation and Long Term Adaptive to calculate the Adaptive Memory Factor for total fuel correction.
- **200 Rev Counter** — Counts 0–100 720 degree cycles.
- **SCW Cat 200 Rev Counter** — Counts when in similar conditions.
- **SCW FTP 1000 Rev Counter** — Counts 0–4 when in similar conditions.
- **Misfire Good Trip Counter** — Counts up to three to turn OFF the MIL.

Description	Group-Page
ABS FASTENER TORQUE, SPECIFICATIONS	5-91
ABSORBER - DESCRIPTION, SHOCK	2-36
ABSORBER - INSTALLATION, SHOCK	2-38
ABSORBER - OPERATION, SHOCK	2-36
ABSORBER - REMOVAL, SHOCK	2-36
ABSORBER (UPPER BUSHING) - ASSEMBLY, SHOCK	2-37
ABSORBER (UPPER BUSHING) - DISASSEMBLY, SHOCK	2-37
A/C CLUTCH BREAK-IN, STANDARD PROCEDURE	24-15
A/C COMPRESSOR CLUTCH COIL, DIAGNOSIS AND TESTING	24-14
A/C COMPRESSOR CLUTCH RELAY - DESCRIPTION	24-18
A/C COMPRESSOR CLUTCH RELAY - INSTALLATION	24-19
A/C COMPRESSOR CLUTCH RELAY - OPERATION	24-18
A/C COMPRESSOR CLUTCH RELAY - REMOVAL	24-19
A/C COMPRESSOR CLUTCH/COIL - DESCRIPTION	24-13
A/C COMPRESSOR CLUTCH/COIL - OPERATION	24-13
A/C COMPRESSOR, DESCRIPTION	24-72
A/C COMPRESSOR, INSTALLATION	24-74
A/C COMPRESSOR MOUNTING BRACKET, 2.4L ENGINE	24-74,24-75
A/C COMPRESSOR NOISE DIAGNOSIS, DIAGNOSIS AND TESTING	24-72
A/C COMPRESSOR, OPERATION	24-72
A/C COMPRESSOR, REMOVAL	24-73
A/C CONDENSER - DESCRIPTION	24-75
A/C CONDENSER - OPERATION	24-75
A/C COOL DOWN TEST, DIAGNOSIS AND TESTING	24-6
A/C DISCHARGE LINE - INSTALLATION	24-80
A/C DISCHARGE LINE - REMOVAL	24-79
A/C EVAPORATOR - DESCRIPTION	24-80,24-98
A/C EVAPORATOR - INSTALLATION	24-81
A/C EVAPORATOR - OPERATION	24-80,24-98
A/C EVAPORATOR - REMOVAL	24-81
A/C EVAPORATOR, INSTALLATION - REAR	24-100
A/C EVAPORATOR LINE EXTENSION, INSTALLATION - REAR	24-100
A/C EVAPORATOR LINE EXTENSION, REMOVAL - REAR	24-99
A/C EVAPORATOR, REMOVAL - REAR	24-98
A/C EXPANSION VALVE - DESCRIPTION	24-100
A/C EXPANSION VALVE - OPERATION	24-100
A/C EXPANSION VALVE, DIAGNOSIS AND TESTING - FRONT	24-82
A/C EXPANSION VALVE, DIAGNOSIS AND TESTING - REAR	24-101
A/C HEATER CONTROL - DESCRIPTION	24-19
A/C PERFORMANCE TEST, DIAGNOSIS AND TESTING	24-7
A/C PRESSURE TRANSDUCER - DESCRIPTION	24-20
A/C PRESSURE TRANSDUCER - OPERATION	24-20
A/C PRESSURE TRANSDUCER, DIAGNOSIS AND TESTING	24-21
A/C SYSTEM - CAUTION	24-66
A/C SYSTEM, SPECIFICATIONS	24-11
A/C SYSTEM, WARNING	24-66
ACCELERATOR PEDAL - INSTALLATION	14-28
ACCELERATOR PEDAL - REMOVAL	14-28
ACCESSORY DRIVE BELT - DIAGNOSIS AND TESTING	7-7
ACCESSORY DRIVE BELT TENSION, SPECIFICATIONS	7-5
ACCUMULATOR - DESCRIPTION	21-218,21-73
ACCUMULATOR - OPERATION	21-218,21-73
A/C-HEATER CONTROL - DESCRIPTION	24-33
A/C-HEATER CONTROL - INSTALLATION	24-34
A/C-HEATER CONTROL - OPERATION	24-33
A/C-HEATER CONTROL - REMOVAL	24-33
A/C-HEATER CONTROL CALIBRATION, STANDARD PROCEDURE	24-19
ACTUATOR - DESCRIPTION, BLEND DOOR	24-22,24-34
ACTUATOR - DESCRIPTION, ENGAGE	8N-9
ACTUATOR - DESCRIPTION, LATCH	8N-13
ACTUATOR - DESCRIPTION, MODE DOOR	24-29
ACTUATOR - DESCRIPTION, RECIRCULATION DOOR	24-31
ACTUATOR - INSTALLATION, BLEND DOOR	24-22,24-35
ACTUATOR - INSTALLATION, ENGAGE	8N-10
ACTUATOR - INSTALLATION, INSIDE HANDLE	23-27
ACTUATOR - INSTALLATION, LATCH	8N-14
ACTUATOR - INSTALLATION, MODE DOOR	24-30
ACTUATOR - INSTALLATION, RECIRCULATION DOOR	24-32
ACTUATOR - OPERATION, BLEND DOOR	24-22, 24-35
ACTUATOR - OPERATION, ENGAGE	8N-9
ACTUATOR - OPERATION, LATCH	8N-13
ACTUATOR - OPERATION, MODE DOOR	24-29
ACTUATOR - OPERATION, RECIRCULATION DOOR	24-31
ACTUATOR - REAR - DESCRIPTION, MODE DOOR	24-39
ACTUATOR - REAR - INSTALLATION, MODE DOOR	24-40
ACTUATOR - REAR - OPERATION, MODE DOOR	24-39
ACTUATOR - REAR - REMOVAL, MODE DOOR	24-39
ACTUATOR - REMOVAL, BLEND DOOR	24-22, 24-35
ACTUATOR - REMOVAL, ENGAGE	8N-9
ACTUATOR - REMOVAL, INSIDE HANDLE	23-27
ACTUATOR - REMOVAL, LATCH	8N-13
ACTUATOR - REMOVAL, MODE DOOR	24-29
ACTUATOR - REMOVAL, RECIRCULATION DOOR	24-32
ADAPTER - INSTALLATION, FRONT DISC BRAKE CALIPER	5-31
ADAPTER - INSTALLATION, OIL FILTER	9-142
ADAPTER - REMOVAL, FRONT DISC BRAKE CALIPER	5-31
ADAPTER - REMOVAL, OIL FILTER	9-142
ADAPTIVE MEMORIES, OPERATION - FUEL CORRECTION OR	14-24
ADDING ADDITIONAL COOLANT - STANDARD PROCEDURE	7-4
ADDITIONAL COOLANT - STANDARD PROCEDURE, ADDING	7-4
ADHESIVE ATTACHED - INSTALLATION, EXTERIOR NAME PLATES	23-51
ADHESIVE ATTACHED - REMOVAL, EXTERIOR NAME PLATES	23-51
ADHESIVE LOCATIONS - FOLD-IN-FLOOR ONLY - SPECIFICATIONS, STRUCTURAL	23-228
ADHESIVE LOCATIONS - SPECIFICATIONS, STRUCTURAL	23-218
ADJUSTABLE - INSTALLATION, PEDALS	5-43
ADJUSTABLE - REMOVAL, PEDALS	5-40
ADJUSTABLE PEDALS SWITCH - INSTALLATION	5-11
ADJUSTABLE PEDALS SWITCH - REMOVAL	5-11
ADJUSTER - B OR C-PILLAR - INSTALLATION, SEAT BELT HEIGHT	8O-38
ADJUSTER - B OR C-PILLAR - REMOVAL, SEAT BELT HEIGHT	8O-38
ADJUSTER - DIAGNOSIS AND TESTING, DRUM BRAKE AUTOMATIC	5-14
ADJUSTER - INSTALLATION, FRONT SEAT TRACK MANUAL	23-126
ADJUSTER - INSTALLATION, FRONT SEAT TRACK POWER	23-124
ADJUSTER - REMOVAL, FRONT SEAT TRACK MANUAL	23-125
ADJUSTER - REMOVAL, FRONT SEAT TRACK POWER	23-124
ADJUSTER KNOB - INSTALLATION, SEAT BELT HEIGHT	8O-38
ADJUSTER KNOB - REMOVAL, SEAT BELT HEIGHT	8O-38
ADJUSTER NOISE DIAGNOSIS - DIAGNOSIS AND TESTING, HYDRAULIC LASH	9-34
ADJUSTER TENSION RELEASE - STANDARD PROCEDURE, PARKING BRAKE AUTOMATIC	5-63
ADJUSTER TENSION RESET - STANDARD PROCEDURE, PARKING BRAKE AUTOMATIC	5-64
ADJUSTER/MANUAL - OCS - INSTALLATION, FRONT SEAT TRACK	23-128
ADJUSTER/MANUAL - OCS - REMOVAL, FRONT SEAT TRACK	23-126
ADJUSTER/POWER - OCS - INSTALLATION, FRONT SEAT TRACK	23-125
ADJUSTER/POWER - OCS - REMOVAL, FRONT SEAT TRACK	23-124
ADJUSTERS - INSTALLATION, HYDRAULIC LASH	9-35
ADJUSTERS - REMOVAL, HYDRAULIC LASH	9-35
AERATION - DIAGNOSIS AND TESTING, COOLING SYSTEM	7-4
AFTER AN AIRBAG DEPLOYMENT - STANDARD PROCEDURE, SERVICE	8O-7
AIR CLEANER ELEMENT - INSTALLATION	9-101, 9-24
AIR CLEANER ELEMENT - REMOVAL	9-101,9-24
AIR CLEANER HOUSING - INSTALLATION	9-102, 9-25
AIR CLEANER HOUSING - REMOVAL	9-101,9-25
AIR CONDITIONER, DESCRIPTION - HEATER	24-1
AIR CONDITIONER, OPERATION - HEATER	24-4
AIR CONTROL MOTOR - DESCRIPTION, IDLE	14-33
AIR CONTROL MOTOR - INSTALLATION, IDLE	14-33
AIR CONTROL MOTOR - OPERATION, IDLE	14-33
AIR CONTROL MOTOR - REMOVAL, IDLE	14-33
AIR EXHAUSTER - DESCRIPTION, REAR QUARTER PANEL/FENDER	23-59
AIR EXHAUSTER - INSTALLATION, REAR QUARTER PANEL/FENDER	23-60
AIR EXHAUSTER - REMOVAL, REAR QUARTER PANEL/FENDER	23-59
AIR FILTER - DESCRIPTION	24-42
AIR FILTER - INSTALLATION	24-43
AIR FILTER - REMOVAL	24-42
AIR GAP, SPECIFICATIONS - WHEEL SPEED SENSOR	5-91
AIR INTAKE PIPE - INSTALLATION	24-115
AIR INTAKE PIPE - REMOVAL	24-115
AIR OUTLETS - DESCRIPTION	24-43,24-56
AIR OUTLETS - INSTALLATION	24-56
AIR OUTLETS - REMOVAL	24-56
AIR PRESSURE TESTS - DIAGNOSIS AND TESTING, CLUTCH	21-153,21-8
AIR TEMPERATURE SENSOR - DESCRIPTION, INLET	14-34
AIRBAG - DESCRIPTION, CURTAIN	8O-12
AIRBAG - DESCRIPTION, DRIVER	8O-16
AIRBAG - DESCRIPTION, KNEE BLOCKER	8O-22
AIRBAG - DESCRIPTION, PASSENGER	8O-30
AIRBAG - INSTALLATION, CURTAIN	8O-16
AIRBAG - INSTALLATION, DRIVER	8O-18
AIRBAG - INSTALLATION, KNEE BLOCKER	8O-23
AIRBAG - INSTALLATION, PASSENGER	8O-32
AIRBAG - OPERATION, CURTAIN	8O-13
AIRBAG - OPERATION, DRIVER	8O-16
AIRBAG - OPERATION, KNEE BLOCKER	8O-22
AIRBAG - OPERATION, PASSENGER	8O-30
AIRBAG - REMOVAL, CURTAIN	8O-14
AIRBAG - REMOVAL, DRIVER	8O-17
AIRBAG - REMOVAL, KNEE BLOCKER	8O-23
AIRBAG - REMOVAL, PASSENGER	8O-30
AIRBAG DEPLOYMENT - STANDARD PROCEDURE, SERVICE AFTER AN	8O-7
AIRBAG DISABLED INDICATOR - DESCRIPTION, PASSENGER	8O-33
AIRBAG DISABLED INDICATOR - INSTALLATION, PASSENGER	8O-34
AIRBAG DISABLED INDICATOR - OPERATION, PASSENGER	8O-33
AIRBAG DISABLED INDICATOR - REMOVAL, PASSENGER	8O-34
AIRBAG SYSTEM - DIAGNOSIS AND TESTING	8O-6
AIRBAGS - STANDARD PROCEDURE, HANDLING	8O-6

Description	Group-Page
AJAR SWITCH - EXPORT - INSTALLATION, HOOD	8Q-3
AJAR SWITCH - EXPORT - REMOVAL, HOOD	8Q-3
ALIGNMENT - DESCRIPTION, WHEEL	2-47
ALIGNMENT - EXPORT - STANDARD PROCEDURE, FRONT FOG LAMP UNIT	8L-9
ALIGNMENT - EXPORT - STANDARD PROCEDURE, HEADLAMP UNIT	8L-15
ALIGNMENT - STANDARD PROCEDURE, FRONT FOG LAMP UNIT	8L-9
ALIGNMENT - STANDARD PROCEDURE, FRONT WIPER ARM	8R-9
ALIGNMENT - STANDARD PROCEDURE, HEADLAMP UNIT	8L-14
ALIGNMENT - STANDARD PROCEDURE, WHEEL	2-52
ALIGNMENT, SPECIFICATIONS - WHEEL	2-56
AMBIENT TEMP SENSOR - DESCRIPTION	8M-12
AMBIENT TEMP SENSOR - OPERATION	8M-12
AMBIENT TEMPERATURE SENSOR CIRCUIT, DIAGNOSIS AND TESTING	8M-12
AMBIENT TEMPERATURE SENSOR, DIAGNOSIS AND TESTING	8M-12
AMPLIFIER - INSTALLATION	8A-7
AMPLIFIER - REMOVAL	8A-7
AN AIRBAG DEPLOYMENT - STANDARD PROCEDURE, SERVICE AFTER	8O-7
ANCHOR - DESCRIPTION, CHILD RESTRAINT	8O-9
ANCHOR - OPERATION, CHILD RESTRAINT	8O-10
ANTENNA - EXPORT - DESCRIPTION, QUARTER GLASS INTEGRAL	8A-13
ANTENNA - EXPORT - OPERATION, QUARTER GLASS INTEGRAL	8A-13
ANTENNA - NAVIGATION RADIO - INSTALLATION	8A-11
ANTENNA - NAVIGATION RADIO - REMOVAL	8A-11
ANTENNA BODY AND CABLE - DESCRIPTION	8A-7
ANTENNA BODY AND CABLE - OPERATION	8A-7
ANTENNA BODY AND CABLE, DIAGNOSIS AND TESTING	8A-8
ANTENNA CABLE - INSTALLATION, INSTRUMENT PANEL	8A-12
ANTENNA CABLE - REMOVAL, INSTRUMENT PANEL	8A-12
ANTENNA, EXPORT - QUARTER GLASS INTEGRAL	8A-13
ANTENNA MODULE - EXPORT - DESCRIPTION	8A-10
ANTENNA MODULE - EXPORT - OPERATION	8A-10
ANTENNA MODULE, EXPORT	8A-10
ANTILOCK BRAKE - DESCRIPTION, CONTROLLER	8E-4
ANTILOCK BRAKE - INSTALLATION, CONTROLLER	8E-6
ANTILOCK BRAKE - OPERATION, CONTROLLER	8E-5
ANTILOCK BRAKE - REMOVAL, CONTROLLER	8E-5
ANTILOCK BRAKE SYSTEM - DESCRIPTION	5-87
ANTILOCK BRAKE SYSTEM - OPERATION	5-88
ANTILOCK BRAKE SYSTEM BLEEDING - STANDARD PROCEDURE	5-90
ANTILOCK BRAKE SYSTEM (EXPORT) - DESCRIPTION	5-87
A-PILLAR LOWER EXTENSION TRIM - INSTALLATION	23-79
A-PILLAR LOWER EXTENSION TRIM - REMOVAL	23-79
A-PILLAR TRIM - INSTALLATION	23-79
A-PILLAR TRIM - REMOVAL	23-79
A-PILLAR-HEADER, OR B-PILLAR - INSTALLATION	23-17
A-PILLAR-HEADER, OR B-PILLAR - REMOVAL	23-17
APPLIQUE - INSTALLATION	23-14
APPLIQUE - REMOVAL	23-14
ARM - DESCRIPTION, LOWER CONTROL	2-12
ARM - INSPECTION, LOWER CONTROL	2-14
ARM - INSTALLATION, LOWER CONTROL	2-15
ARM - INSTALLATION, REAR WIPER	8R-10
ARM - OPERATION, LOWER CONTROL	2-12
ARM - REMOVAL, LOWER CONTROL	2-12
ARM - REMOVAL, REAR WIPER	8R-10
ARM ALIGNMENT - STANDARD PROCEDURE, FRONT WIPER	8R-9
ARM (REAR BUSHING - HYDRO) - ASSEMBLY, LOWER CONTROL	2-15
ARM (REAR BUSHING - HYDRO) - DISASSEMBLY, LOWER CONTROL	2-13
ARM (REAR BUSHING - STANDARD) - ASSEMBLY, LOWER CONTROL	2-14
ARM (REAR BUSHING - STANDARD) - DISASSEMBLY, LOWER CONTROL	2-13
ARMREST - INSTALLATION	23-108
ARMREST - REMOVAL	23-108
ARMREST - SECOND ROW - FOLD-IN-FLOOR - INSTALLATION	23-130
ARMREST - SECOND ROW - FOLD-IN-FLOOR - REMOVAL	23-130
ARMREST ROTATING ASSEMBLY - SECOND ROW - FOLD-IN-FLOOR - INSTALLATION	23-130
ARMREST ROTATING ASSEMBLY - SECOND ROW - FOLD-IN-FLOOR - REMOVAL	23-130
ARMS - DESCRIPTION, ROCKER	9-112
ARMS - INSPECTION, ROCKER	9-35
ARMS - INSTALLATION, FRONT WIPER	8R-9
ARMS - INSTALLATION, ROCKER	9-35
ARMS - OPERATION, ROCKER	9-112
ARMS - REMOVAL, FRONT WIPER	8R-9
ARMS - REMOVAL, ROCKER	9-35
ARMS AND SHAFT - ASSEMBLY, ROCKER	9-113
ARMS AND SHAFT - DISASSEMBLY, ROCKER	9-113
ARMS AND SHAFT - INSTALLATION, ROCKER	9-113
ARMS AND SHAFT - REMOVAL, ROCKER	9-112
ASSIST DISPLAY - DESCRIPTION, PARK	8B-3
ASSIST DISPLAY - INSTALLATION, PARK	8B-4
ASSIST DISPLAY - OPERATION, PARK	8B-3
ASSIST DISPLAY - REMOVAL, PARK	8B-4
ASSIST HANDLE - INSTALLATION	23-79
ASSIST HANDLE - REMOVAL	23-79
ASSIST MODULE - DESCRIPTION, PARK	8B-4
ASSIST MODULE - INSTALLATION, PARK	8B-6
ASSIST MODULE - OPERATION, PARK	8B-5
ASSIST MODULE - REMOVAL, PARK	8B-5
ASSIST SENSOR - DESCRIPTION, PARK	8B-6
ASSIST SENSOR - INSTALLATION, PARK	8B-6
ASSIST SENSOR - OPERATION, PARK	8B-6
ASSIST SENSOR - REMOVAL, PARK	8B-6
ASSIST STRAP - INSTALLATION, FRONT SEAT BACK	23-112
ASSIST STRAP - REMOVAL, FRONT SEAT BACK	23-112
ATTACHED - INSTALLATION, EXTERIOR NAME PLATES - ADHESIVE	23-51
ATTACHED - INSTALLATION, EXTERIOR NAME PLATES - TAPE	23-51
ATTACHED - REMOVAL, EXTERIOR NAME PLATES - ADHESIVE	23-51
ATTACHED - REMOVAL, EXTERIOR NAME PLATES - TAPE	23-51
AUDIO/VIDEO - DESCRIPTION	8A-1
AUDIO/VIDEO, DIAGNOSIS AND TESTING	8A-2
AUTO SHUT DOWN RELAY - DESCRIPTION	8I-3
AUTO SHUT DOWN RELAY - OPERATION	8I-3
AUTOMATIC ADJUSTER - DIAGNOSIS AND TESTING, DRUM BRAKE	5-14
AUTOMATIC ADJUSTER TENSION RELEASE - STANDARD PROCEDURE, PARKING BRAKE	5-63
AUTOMATIC ADJUSTER TENSION RESET - STANDARD PROCEDURE, PARKING BRAKE	5-64
AUTOMATIC DAY / NIGHT MIRROR - DESCRIPTION	8N-28
AUTOMATIC DAY / NIGHT MIRROR - OPERATION	8N-28
AUTOMATIC DAY / NIGHT MIRROR, DIAGNOSIS AND TESTING	8N-28
AUTOMATIC TEMPERATURE CONTROL, DESCRIPTION	24-3
AUTOMATIC TEMPERATURE CONTROL, OPERATION	24-5
AUTOMATIC TEMPERATURE CONTROL SYSTEM, OPERATION	24-114
AUTOMATIC TRANSAXLE - DESCRIPTION, 40TE	21-2
AUTOMATIC TRANSAXLE - DESCRIPTION, 41TE	21-147
AUTOMATIC TRANSAXLE - OPERATION, 40TE	21-4
AUTOMATIC TRANSAXLE - OPERATION, 41TE	21-149
AUTOMATIC TRANSAXLE, SPECIAL TOOLS - 41TE	21-213
AUTOMATIC/MANUAL TRANSAXLE FLUID - DESCRIPTION	0-4
AWD - INSTALLATION	2-45
AWD - INSTALLATION, REAR WHEEL SPEED SENSOR	5-92
AWD - INSTALLATION, SPRING	2-39
AWD - REMOVAL	2-44
AWD - REMOVAL, REAR WHEEL SPEED SENSOR	5-92
AWD - REMOVAL, SPRING	2-38
AWD, HEAVY DUTY, CARGO - INSTALLATION	2-36
AWD, HEAVY DUTY, CARGO - REMOVAL	2-36
AWD POWER TRANSFER UNIT FLUID - DESCRIPTION	0-6
AWD REAR DRIVELINE MODULE FLUIDS - DESCRIPTION	0-6
B OR C-PILLAR - INSTALLATION, SEAT BELT HEIGHT ADJUSTER	8O-38
B OR C-PILLAR - REMOVAL, SEAT BELT HEIGHT ADJUSTER	8O-38
BACK - INSTALLATION, BENCH SEAT	23-147
BACK - INSTALLATION, FRONT SEAT	23-111
BACK - QUAD BUCKET - INSTALLATION, BUCKET SEAT	23-141
BACK - QUAD BUCKET - REMOVAL, BUCKET SEAT	23-140
BACK - REMOVAL, BENCH SEAT	23-147
BACK - REMOVAL, FRONT SEAT	23-111
BACK ASSIST STRAP - INSTALLATION, FRONT SEAT	23-112
BACK ASSIST STRAP - REMOVAL, FRONT SEAT	23-112
BACK COVER - INSTALLATION, BENCH SEAT	23-148
BACK COVER - INSTALLATION, FRONT SEAT	23-116
BACK COVER - REMOVAL, BENCH SEAT	23-148
BACK COVER - REMOVAL, FRONT SEAT	23-113
BACK COVER/FOAM - SECOND ROW - FOLD-IN-FLOOR - INSTALLATION, SEAT	23-133
BACK COVER/FOAM - SECOND ROW - FOLD-IN-FLOOR - REMOVAL, SEAT	23-133
BACK COVER/FOAM - THIRD ROW - FOLD-IN-FLOOR - INSTALLATION, SEAT	23-156
BACK COVER/FOAM - THIRD ROW - FOLD-IN-FLOOR - REMOVAL, SEAT	23-155
BACK FRAME - SECOND ROW - FOLD-IN-FLOOR - INSTALLATION, SEAT	23-134
BACK FRAME - SECOND ROW - FOLD-IN-FLOOR - REMOVAL, SEAT	23-134
BACK FRAME - THIRD ROW - FOLD-IN-FLOOR - INSTALLATION, SEAT	23-157
BACK FRAME - THIRD ROW - FOLD-IN-FLOOR - REMOVAL, SEAT	23-156
BACK HINGE - REMOVAL, BENCH SEAT	23-146
BACK HINGE COVERS - QUAD BUCKET, 50/50 SPLIT, BENCH - INSTALLATION, SEAT	23-146
BACK HINGE COVERS - QUAD BUCKET, 50/50 SPLIT, BENCH - REMOVAL, SEAT	23-146
BACK PANEL - INSTALLATION, BENCH SEAT	23-144
BACK PANEL - INSTALLATION, FRONT SEAT	23-113
BACK PANEL - REMOVAL, BENCH SEAT	23-143
BACK PANEL - REMOVAL, FRONT SEAT	23-112
BACK PANEL - SECOND ROW -FOLD-IN-FLOOR - INSTALLATION, SEAT	23-134
BACK PANEL - SECOND ROW -FOLD-IN-FLOOR - REMOVAL, SEAT	23-134
BACK PANEL - THIRD ROW -FOLD-IN-FLOOR - INSTALLATION, SEAT	23-158
BACK PANEL - THIRD ROW -FOLD-IN-FLOOR - REMOVAL, SEAT	23-158

Description	Group-Page
BACKLIGHT (EBL) SYSTEM, DIAGNOSIS AND TESTING - ELECTRIC	8G-2
BACKSTOW STRAP - THIRD ROW - FOLD-IN-FLOOR - INSTALLATION, SEAT	23-158
BACKSTOW STRAP - THIRD ROW - FOLD-IN-FLOOR - REMOVAL, SEAT	23-158
BAG RETAINER - INSTALLATION, PLASTIC GROCERY	23-149
BAG RETAINER - REMOVAL, PLASTIC GROCERY	23-149
BALANCE - STANDARD PROCEDURE, TIRE AND WHEEL	22-5
BALANCE SHAFTS AND CARRIER ASSEMBLY - DESCRIPTION	9-71
BALANCE SHAFTS AND CARRIER ASSEMBLY - INSTALLATION	9-73
BALANCE SHAFTS AND CARRIER ASSEMBLY - OPERATION	9-71
BALANCE SHAFTS AND CARRIER ASSEMBLY - REMOVAL	9-71
BALL JOINT - DESCRIPTION, LOWER	2-10
BALL JOINT - DIAGNOSIS AND TESTING, LOWER	2-10
BALL JOINT - OPERATION, LOWER	2-10
BAR - DESCRIPTION, STABILIZER	2-16,2-44
BAR - DESCRIPTION, TRACK	2-45
BAR - INSPECTION, STABILIZER	2-17
BAR - INSTALLATION, STABILIZER	2-17
BAR - INSTALLATION, TRACK	2-46
BAR - OPERATION, STABILIZER	2-16,2-44
BAR - OPERATION, TRACK	2-46
BAR - REMOVAL, STABILIZER	2-17
BAR - REMOVAL, TRACK	2-46
BAR CUSHION - INSTALLATION, STABILIZER	2-4
BAR CUSHION - REMOVAL, STABILIZER	2-4
BASE BRAKE BLEEDING - STANDARD PROCEDURE	5-8
BASE BRAKE SYSTEM - DIAGNOSIS AND TESTING	5-4
BASE BRAKE SYSTEM, SPECIAL TOOLS	5-10
BASE BRAKES - DESCRIPTION	5-3
BASE BRAKES - OPERATION	5-3
BASE BRAKES (EXPORT) - DESCRIPTION	5-3
BASE COAT/CLEARCOAT FINISH - DESCRIPTION	23-101
BASE RISER - SECOND ROW - FOLD-IN-FLOOR - INSTALLATION, SEAT	23-135
BASE RISER - SECOND ROW - FOLD-IN-FLOOR - REMOVAL, SEAT	23-134
BASE TRAY - INSTALLATION, FLOOR CONSOLE	23-89
BASE TRAY - REMOVAL, FLOOR CONSOLE	23-89
BATTERY - DESCRIPTION	8F-7
BATTERY - OPERATION	8F-9
BATTERY - REMOVAL	8F-16
BATTERY - SPECIFICATIONS	8N-24
BATTERY CABLES - DESCRIPTION	8F-16
BATTERY CABLES - OPERATION	8F-17
BATTERY CABLES, DIAGNOSIS AND TESTING	8F-17
BATTERY CHARGING, STANDARD PROCEDURE - CONVENTIONAL	8F-11
BATTERY CHARGING, STANDARD PROCEDURE - SPIRAL PLATE	8F-10
BATTERY, DIAGNOSIS AND TESTING	8F-9
BATTERY ELECTROLYTE LEVEL, STANDARD PROCEDURE - CHECKING	8F-14
BATTERY HOLDDOWN - INSTALLATION	8F-16
BATTERY HOLDDOWN - REMOVAL	8F-16
BATTERY REPLACEMENT - STANDARD PROCEDURE	8N-24
BATTERY, SPECIFICATIONS	8F-6
BATTERY SYSTEM - DESCRIPTION	8F-1
BATTERY SYSTEM - OPERATION	8F-2
BATTERY SYSTEM, DIAGNOSIS AND TESTING	8F-2
BATTERY SYSTEM SPECIAL TOOLS, SPECIAL TOOLS	8F-7
BATTERY TEMPERATURE SENSOR - DESCRIPTION	8F-24
BATTERY TEMPERATURE SENSOR - OPERATION	8F-24
BATTERY TEMPERATURE SENSOR - REMOVAL	8F-24
BATTERY TEMPERATURE SENSOR - SPECIFICATIONS	8F-23
BATTERY TESTER, STANDARD PROCEDURE - MICRO 420	8F-15
BATTERY TRAY - DESCRIPTION	8F-19
BATTERY TRAY - INSTALLATION	8F-20
BATTERY TRAY - REMOVAL	8F-19
BEARING - DESCRIPTION, HUB	2-30,2-5
BEARING - DIAGNOSIS AND TESTING, HUB	2-31,2-5
BEARING - INSTALLATION, HUB	2-33,2-5
BEARING - OPERATION, HUB	2-30,2-5
BEARING - REMOVAL, HUB	2-31,2-5
BEARING CLEARANCE - STANDARD PROCEDURE, MEASURING CONNECTING ROD	9-123
BEARING CLEARANCE USING PLASTIGAGE - STANDARD PROCEDURE, MEASURING	9-12,9-86
BEARING FITTING - STANDARD PROCEDURE, MAIN	9-125
BEARING PRELOAD - ADJUSTMENT, DIFFERENTIAL	21-228
BEARING PRELOAD MEASUREMENT AND ADJUSTMENT, ADJUSTMENTS - DIFFERENTIAL	21-79
BEARINGS - INSTALLATION, CRANKSHAFT MAIN	9-127
BEARINGS - REMOVAL, CRANKSHAFT MAIN	9-127
BEARINGS (IN BLOCK) - DESCRIPTION, CAMSHAFT	9-118
BEARINGS (IN BLOCK) - INSPECTION, CAMSHAFT	9-118
BEARINGS (IN BLOCK) - INSTALLATION, CAMSHAFT	9-118
BEARINGS (IN BLOCK) - OPERATION, CAMSHAFT	9-118
BEARINGS (IN BLOCK) - REMOVAL, CAMSHAFT	9-118
BELLCRANK - INSTALLATION	23-35
BELLCRANK - REMOVAL	23-35
BELT - DIAGNOSIS AND TESTING, ACCESSORY DRIVE	7-7
BELT - FOLD-IN-FLOOR - INSTALLATION, SEAT BELT CENTER LAP	23-157
BELT - FOLD-IN-FLOOR - REMOVAL, SEAT BELT CENTER LAP	23-157
BELT - INSTALLATION, TIMING	9-67
BELT - REMOVAL, TIMING	9-65
BELT & RETRACTOR - FIRST ROW - OUTBOARD - INSTALLATION, SEAT	8O-40
BELT & RETRACTOR - FIRST ROW - OUTBOARD - REMOVAL, SEAT	8O-39
BELT & RETRACTOR - OUTBOARD - FRONT - INSTALLATION, SEAT	8O-39
BELT & RETRACTOR - OUTBOARD - FRONT - REMOVAL, SEAT	8O-38
BELT & RETRACTOR - SECOND ROW - LEFT OUTBOARD - INSTALLATION, SEAT	8O-42
BELT & RETRACTOR - SECOND ROW - LEFT OUTBOARD - REMOVAL, SEAT	8O-42
BELT & RETRACTOR - SECOND ROW - RIGHT OUTBOARD - INSTALLATION, SEAT	8O-40
BELT & RETRACTOR - SECOND ROW - RIGHT OUTBOARD - REMOVAL, SEAT	8O-40
BELT & RETRACTOR - SECOND ROW - RIGHT OUTBOARD WITH REAR HVAC - LWB - INSTALLATION, SEAT	8O-41
BELT & RETRACTOR - SECOND ROW - RIGHT OUTBOARD WITH REAR HVAC - LWB - REMOVAL, SEAT	8O-41
BELT BUCKLE - FIRST ROW - BENCH - INSTALLATION, SEAT	8O-37
BELT BUCKLE - FIRST ROW - BENCH - REMOVAL, SEAT	8O-36
BELT BUCKLE - FIRST ROW INBOARD - QUAD BUCKET - INSTALLATION, SEAT	8O-36
BELT BUCKLE - FIRST ROW INBOARD - QUAD BUCKET - REMOVAL, SEAT	8O-35
BELT BUCKLE - FRONT INBOARD - INSTALLATION, SEAT	8O-35
BELT BUCKLE - FRONT INBOARD - REMOVAL, SEAT	8O-35
BELT BUCKLE - SECOND ROW - THREE PASSENGER BENCH - INSTALLATION, SEAT	8O-40
BELT BUCKLE - SECOND ROW - THREE PASSENGER BENCH - REMOVAL, SEAT	8O-40
BELT BUCKLE - SECOND ROW INBOARD - 50/50 BENCH - INSTALLATION, SEAT	8O-38
BELT BUCKLE - SECOND ROW INBOARD - 50/50 BENCH - REMOVAL, SEAT	8O-37
BELT CENTER LAP BELT - FOLD-IN-FLOOR - INSTALLATION, SEAT	23-157
BELT CENTER LAP BELT - FOLD-IN-FLOOR - REMOVAL, SEAT	23-157
BELT COVER(S) - INSTALLATION, TIMING	9-64
BELT COVER(S) - REMOVAL, TIMING	9-63
BELT HEIGHT ADJUSTER - B OR C-PILLAR - INSTALLATION, SEAT	8O-38
BELT HEIGHT ADJUSTER - B OR C-PILLAR - REMOVAL, SEAT	8O-38
BELT HEIGHT ADJUSTER KNOB - INSTALLATION, SEAT	8O-38
BELT HEIGHT ADJUSTER KNOB - REMOVAL, SEAT	8O-38
BELT MOLDING - INSTALLATION, FRONT DOOR INNER	23-168
BELT MOLDING - INSTALLATION, FRONT DOOR OUTER	23-167
BELT MOLDING - REMOVAL, FRONT DOOR INNER	23-168
BELT MOLDING - REMOVAL, FRONT DOOR OUTER	23-167
BELT TENSION - STANDARD PROCEDURE, CHECKING POWER STEERING	7-8
BELT TENSION SENSOR - DESCRIPTION	8O-8
BELT TENSION SENSOR - OPERATION	8O-9
BELT TENSION, SPECIFICATIONS - ACCESSORY DRIVE	7-5
BELT TENSIONER - 2.4L - INSTALLATION	7-11
BELT TENSIONER - 2.4L - REMOVAL	7-11
BELT TENSIONER - 3.3/3.8L - INSTALLATION	7-12
BELT TENSIONER - 3.3/3.8L - REMOVAL	7-12
BELT TENSIONER - DESCRIPTION, SEAT	8O-43
BELT TENSIONER - OPERATION, SEAT	8O-43
BELT TENSIONER & PULLEY - INSTALLATION, TIMING	9-70
BELT TENSIONER & PULLEY - REMOVAL, TIMING	9-69
BELTS - 2.4L - ADJUSTMENTS, DRIVE	7-10
BELTS - 2.4L - INSTALLATION, DRIVE	7-9
BELTS - 2.4L - REMOVAL, DRIVE	7-9
BELTS - 3.3/3.8L - INSTALLATION, DRIVE	7-12
BELTS - 3.3/3.8L - REMOVAL, DRIVE	7-11
BELTS - CLEANING, DRIVE	7-8
BELTS - INSPECTION, DRIVE	7-8
BENCH - INSTALLATION, SEAT BACK HINGE COVERS - QUAD BUCKET, 50/50 SPLIT	23-146
BENCH - INSTALLATION, SEAT BELT BUCKLE - FIRST ROW	8O-37
BENCH - INSTALLATION, SEAT BELT BUCKLE - SECOND ROW - THREE PASSENGER	8O-40
BENCH - INSTALLATION, SEAT BELT BUCKLE - SECOND ROW INBOARD - 50/50	8O-38
BENCH - INSTALLATION, SEAT CUSHION COVER - QUAD BUCKET, 50/50 SPLIT	23-144
BENCH - REMOVAL, SEAT BACK HINGE COVERS - QUAD BUCKET, 50/50 SPLIT	23-146
BENCH - REMOVAL, SEAT BELT BUCKLE - FIRST ROW	8O-36
BENCH - REMOVAL, SEAT BELT BUCKLE - SECOND ROW - THREE PASSENGER	8O-40
BENCH - REMOVAL, SEAT BELT BUCKLE - SECOND ROW INBOARD - 50/50	8O-37
BENCH - REMOVAL, SEAT CUSHION COVER - QUAD BUCKET, 50/50 SPLIT	23-144
BENCH SEAT - REMOVAL, CHILD SEAT MODULE	23-104
BENCH SEAT BACK - INSTALLATION	23-147
BENCH SEAT BACK - REMOVAL	23-147
BENCH SEAT BACK COVER - INSTALLATION	23-148
BENCH SEAT BACK COVER - REMOVAL	23-148
BENCH SEAT BACK HINGE - REMOVAL	23-146
BENCH SEAT BACK PANEL - INSTALLATION	23-144
BENCH SEAT BACK PANEL - REMOVAL	23-143

Description	Group-Page
BENCH SEAT RISER - 50/50 SPLIT - INSTALLATION	23-145
BENCH SEAT RISER - 50/50 SPLIT - REMOVAL	23-145
BENCH SEAT RISER - SECOND ROW - INSTALLATION	23-145
BENCH SEAT RISER - SECOND ROW - REMOVAL	23-145
BENCH SEAT RISER - THIRD ROW - INSTALLATION	23-145
BENCH SEAT RISER - THIRD ROW - REMOVAL	23-145
BENCH SEAT TRACK - INSTALLATION	23-148
BENCH SEAT TRACK - REMOVAL	23-148
BEZEL - INSTALLATION, CLUSTER	23-65
BEZEL - INSTALLATION, INSTRUMENT PANEL CENTER	23-72
BEZEL - INSTALLATION, SLIDING DOOR STOP BUMPER	23-25
BEZEL - REMOVAL, CLUSTER	23-65
BEZEL - REMOVAL, INSTRUMENT PANEL CENTER	23-71
BEZEL - REMOVAL, SLIDING DOOR STOP BUMPER	23-25
BEZEL OUTLETS, INSTALLATION - FRONT CENTER	24-45
BEZEL OUTLETS, REMOVAL - FRONT CENTER	24-44
BIN - INSTALLATION, UNDER SEAT STORAGE	23-149
BIN - REMOVAL, UNDER SEAT STORAGE	23-149
BIN GUIDE - INSTALLATION, UNDER SEAT STORAGE	23-150
BIN GUIDE - REMOVAL, UNDER SEAT STORAGE	23-150
BIN LOCK/LATCH - INSTALLATION, UNDER SEAT STORAGE	23-150
BIN LOCK/LATCH - REMOVAL, UNDER SEAT STORAGE	23-150
BLADDER & PRESSURE SENSOR - DESCRIPTION, SEAT WEIGHT	8O-43
BLADDER & PRESSURE SENSOR - OPERATION, SEAT WEIGHT	8O-44
BLADES - CLEANING, WIPER	8R-13
BLADES - INSTALLATION, WIPER	8R-13
BLADES - REMOVAL, WIPER	8R-13
BLEEDING - STANDARD PROCEDURE, ANTILOCK BRAKE SYSTEM	5-90
BLEEDING - STANDARD PROCEDURE, BASE BRAKE	5-8
BLEEDING - STANDARD PROCEDURE, MASTER CYLINDER	5-36
BLEND DOOR ACTUATOR - DESCRIPTION	24-22,24-34
BLEND DOOR ACTUATOR - INSTALLATION	24-22,24-35
BLEND DOOR ACTUATOR - OPERATION	24-22, 24-35
BLEND DOOR ACTUATOR - REMOVAL	24-22, 24-35
BLOCK - CLEANING, ENGINE	9-115,9-37
BLOCK - DESCRIPTION, BLOWER MOTOR RESISTOR	24-24,24-37
BLOCK - DESCRIPTION, ENGINE	9-115,9-36
BLOCK - DESCRIPTION, NON-ABS JUNCTION	5-33
BLOCK - INSPECTION, ENGINE	9-115,9-37
BLOCK - INSTALLATION, NON-ABS JUNCTION	5-34
BLOCK - OPERATION, BLOWER MOTOR RESISTOR	24-24,24-37
BLOCK - OPERATION, NON-ABS JUNCTION	5-33
BLOCK - REMOVAL, NON-ABS JUNCTION	5-34
BLOCK, DIAGNOSIS AND TESTING - FRONT BLOWER MOTOR RESISTOR	24-25
BLOCK, DIAGNOSIS AND TESTING - REAR BLOWER MOTOR RESISTOR	24-38
BLOCK HEATER - DESCRIPTION, ENGINE	7-20
BLOCK HEATER - INSTALLATION, ENGINE	7-21
BLOCK HEATER - OPERATION, ENGINE	7-20
BLOCK HEATER - REMOVAL, ENGINE	7-21
BLOCK HEATER TESTING - DIAGNOSIS AND TESTING, ENGINE	7-21
BLOCKER AIRBAG - DESCRIPTION, KNEE	8O-22
BLOCKER AIRBAG - INSTALLATION, KNEE	8O-23
BLOCKER AIRBAG - OPERATION, KNEE	8O-22
BLOCKER AIRBAG - REMOVAL, KNEE	8O-23
BLOCKER- INFLATABLE KNEE - INSTALLATION	23-75
BLOCKER- INFLATABLE KNEE - REMOVAL	23-75
BLOCKER LATCH - INSTALLATION, FUEL FILL DOOR	23-53
BLOCKER LATCH - REMOVAL, FUEL FILL DOOR	23-53
BLOCKER LATCH STRIKER - INSTALLATION, FUEL FILL DOOR	23-53
BLOCKER LATCH STRIKER - REMOVAL, FUEL FILL DOOR	23-53
BLOCKER LOCKOUT LINK - INSTALLATION, FUEL FILL DOOR	23-54
BLOCKER LOCKOUT LINK - REMOVAL, FUEL FILL DOOR	23-54
BLOWER MOTOR - DESCRIPTION	24-45,24-57
BLOWER MOTOR - DESCRIPTION, POWER MODULE	24-30
BLOWER MOTOR - DESCRIPTION, POWER MODULE - REAR	24-40
BLOWER MOTOR - INSTALLATION, POWER MODULE	24-31
BLOWER MOTOR - INSTALLATION, POWER MODULE - REAR	24-41
BLOWER MOTOR - OPERATION	24-45,24-57
BLOWER MOTOR - OPERATION, POWER MODULE	24-30
BLOWER MOTOR - OPERATION, POWER MODULE - REAR	24-40
BLOWER MOTOR - REMOVAL, POWER MODULE	24-30
BLOWER MOTOR - REMOVAL, POWER MODULE - REAR	24-41
BLOWER MOTOR, DIAGNOSIS AND TESTING - FRONT	24-46
BLOWER MOTOR, DIAGNOSIS AND TESTING - REAR	24-58
BLOWER MOTOR RELAY - DESCRIPTION	24-23, 24-36
BLOWER MOTOR RELAY - INSTALLATION	24-24,24-37
BLOWER MOTOR RELAY - OPERATION	24-23, 24-36
BLOWER MOTOR RELAY - REMOVAL	24-24, 24-37
BLOWER MOTOR RESISTOR BLOCK - DESCRIPTION	24-24,24-37
BLOWER MOTOR RESISTOR BLOCK - OPERATION	24-24,24-37
BLOWER MOTOR RESISTOR BLOCK, DIAGNOSIS AND TESTING - FRONT	24-25
BLOWER MOTOR RESISTOR BLOCK, DIAGNOSIS AND TESTING - REAR	24-38
BODY - ASSEMBLY, VALVE	21-139,21-291
BODY - DESCRIPTION, THROTTLE	14-39
BODY - DESCRIPTION, VALVE	21-132,21-283
BODY - DISASSEMBLY, VALVE	21-135,21-286
BODY - INSTALLATION, THROTTLE	14-40
BODY - INSTALLATION, VALVE	21-144,21-295
BODY - OPERATION, THROTTLE	14-39
BODY - OPERATION, VALVE	21-132,21-283
BODY - REMOVAL, THROTTLE	14-40
BODY - REMOVAL, VALVE	21-133,21-284
BODY AND CABLE - DESCRIPTION, ANTENNA	8A-7
BODY AND CABLE - OPERATION, ANTENNA	8A-7
BODY AND CABLE, DIAGNOSIS AND TESTING - ANTENNA	8A-8
BODY CONTROL MODULE - DESCRIPTION	8E-2
BODY CONTROL MODULE - INSTALLATION	8E-4
BODY CONTROL MODULE - OPERATION	8E-3
BODY CONTROL MODULE - REMOVAL	8E-4
BODY LUBRICATION, SPECIFICATIONS	23-12
BODY OPENING DIMENSIONS - SPECIFICATIONS	23-180
BODY PANEL REPAIR - STANDARD PROCEDURE, PLASTIC	23-3
BODY SEALING LOCATIONS - FOLD-IN-FLOOR ONLY - SPECIFICATIONS	23-209
BODY SEALING LOCATIONS - SPECIFICATIONS	23-183
BODY SIDE - INSTALLATION	23-44
BODY SIDE - REMOVAL	23-44
BODY SIDE MOLDINGS - INSTALLATION	23-46
BODY SIDE MOLDINGS - REMOVAL	23-45
BODY, SPECIAL TOOLS	23-13
BOLSTER - INSTALLATION, QUARTER TRIM	23-95
BOLSTER - REMOVAL, QUARTER TRIM	23-95
BOOSTER - DESCRIPTION, POWER BRAKE	5-45
BOOSTER - DIAGNOSIS AND TESTING, POWER BRAKE	5-46
BOOSTER - OPERATION, POWER BRAKE	5-46
BOOT - INNER - INSTALLATION, CV	3-7
BOOT - INNER - REMOVAL, CV	3-6
BOOT - OUTER - INSTALLATION, CV	3-11
BOOT - OUTER - REMOVAL, CV	3-10
BORE FITTING - STANDARD PROCEDURE, PISTON TO CYLINDER	9-44
BORE HONING - STANDARD PROCEDURE, CYLINDER	9-115,9-36
BOTTOM OF SEAT CUSHION PAN PANEL-THIRD ROW - FOLD-IN-FLOOR - INSTALLATION	23-152
BOTTOM OF SEAT CUSHION PAN PANEL-THIRD ROW - FOLD-IN-FLOOR - REMOVAL	23-152
BOX - INSTALLATION, GLOVE	23-66
BOX - REMOVAL, GLOVE	23-66
BOX LAMP SWITCH - INSTALLATION, GLOVE	8L-22
BOX LAMP SWITCH - REMOVAL, GLOVE	8L-22
BOX LATCH - INSTALLATION, GLOVE	23-66
BOX LATCH - REMOVAL, GLOVE	23-66
BOX LATCH STRIKER - INSTALLATION, GLOVE	23-66
BOX LATCH STRIKER - REMOVAL, GLOVE	23-66
B-PILLAR - INSTALLATION, A-PILLAR-HEADER, OR	23-17
B-PILLAR - REMOVAL, A-PILLAR-HEADER, OR	23-17
B-PILLAR LOWER TRIM - INSTALLATION	23-80
B-PILLAR LOWER TRIM - REMOVAL	23-79
B-PILLAR SWITCH - DESCRIPTION	8N-52
B-PILLAR SWITCH - INSTALLATION	8N-52
B-PILLAR SWITCH - OPERATION	8N-52
B-PILLAR SWITCH - REMOVAL	8N-52
B-PILLAR UPPER TRIM - INSTALLATION	23-80
B-PILLAR UPPER TRIM - REMOVAL	23-80
BRACKET - DESCRIPTION, TRANSVERSE	8N-19
BRACKET - INSTALLATION, TRANSVERSE	8N-19
BRACKET - OPERATION, TRANSVERSE	8N-19
BRACKET - REMOVAL, TRANSVERSE	8N-19
BRACKET, 2.4L ENGINE - A/C COMPRESSOR MOUNTING	24-74,24-75
BRAKE - DESCRIPTION, CONTROLLER ANTILOCK	8E-4
BRAKE - INSTALLATION, CONTROLLER ANTILOCK	8E-6
BRAKE - INSTALLATION, LEVER - PARKING	5-76
BRAKE - INSTALLATION, SHOES - PARKING	5-84
BRAKE - INSTALLATION, SUPPORT PLATE - DRUM	5-61
BRAKE - OPERATION, CONTROLLER ANTILOCK	8E-5
BRAKE - REMOVAL, CONTROLLER ANTILOCK	8E-5
BRAKE - REMOVAL, LEVER - PARKING	5-75
BRAKE - REMOVAL, SHOES - PARKING	5-78
BRAKE - REMOVAL, SUPPORT PLATE - DRUM	5-61
BRAKE AUTOMATIC ADJUSTER - DIAGNOSIS AND TESTING, DRUM	5-14
BRAKE AUTOMATIC ADJUSTER TENSION RELEASE - STANDARD PROCEDURE, PARKING	5-63
BRAKE AUTOMATIC ADJUSTER TENSION RESET - STANDARD PROCEDURE, PARKING	5-64
BRAKE BLEEDING - STANDARD PROCEDURE, BASE	5-8
BRAKE BOOSTER - DESCRIPTION, POWER	5-45
BRAKE BOOSTER - DIAGNOSIS AND TESTING, POWER	5-46
BRAKE BOOSTER - OPERATION, POWER	5-46

Description	Group-Page
BRAKE CABLES - ADJUSTMENT, PARKING	5-65
BRAKE CALIPER - INSTALLATION, REAR DISC	5-30
BRAKE CALIPER - REMOVAL, REAR DISC	5-28
BRAKE CALIPER ADAPTER - INSTALLATION, FRONT DISC	5-31
BRAKE CALIPER ADAPTER - REMOVAL, FRONT DISC	5-31
BRAKE CALIPER (CONTINENTAL TEVES BRAKES) - INSTALLATION, FRONT DISC	5-27
BRAKE CALIPER (CONTINENTAL TEVES BRAKES) - REMOVAL, FRONT DISC	5-24
BRAKE CALIPER GUIDE PINS (TRW BRAKES) - INSTALLATION, DISC	5-32
BRAKE CALIPER GUIDE PINS (TRW BRAKES) - REMOVAL, DISC	5-31
BRAKE CALIPER (TRW BRAKES) - INSTALLATION, FRONT DISC	5-27
BRAKE CALIPER (TRW BRAKES) - REMOVAL, FRONT DISC	5-24
BRAKE FASTENER TORQUE, SPECIFICATIONS	5-9
BRAKE FLUID CONTAMINATION - DIAGNOSIS AND TESTING	5-33
BRAKE FLUID LEVEL CHECKING - STANDARD PROCEDURE	5-33
BRAKE FLUID LEVEL SWITCH - DESCRIPTION	5-10
BRAKE FLUID LEVEL SWITCH - INSTALLATION	5-11
BRAKE FLUID LEVEL SWITCH - OPERATION	5-10
BRAKE FLUID LEVEL SWITCH - REMOVAL	5-11
BRAKE FLUID, SPECIFICATIONS	5-33
BRAKE INTERMEDIATE - INSTALLATION, CABLE - PARKING	5-69
BRAKE INTERMEDIATE - REMOVAL, CABLE - PARKING	5-69
BRAKE LAMP SWITCH - DESCRIPTION	8L-4
BRAKE LAMP SWITCH - DIAGNOSIS AND TESTING	8L-4
BRAKE LAMP SWITCH - INSTALLATION	8L-5
BRAKE LAMP SWITCH - OPERATION	8L-4
BRAKE LAMP SWITCH - REMOVAL	8L-5
BRAKE LEVER AND FRONT CABLE - INSTALLATION, PARKING	5-77
BRAKE LEVER AND FRONT CABLE - REMOVAL, PARKING	5-77
BRAKE PROPORTIONING - DESCRIPTION, ELECTRONIC VARIABLE	5-88
BRAKE PROPORTIONING - OPERATION, ELECTRONIC VARIABLE	5-89
BRAKE ROTOR - DIAGNOSIS AND TESTING	5-55
BRAKE ROTOR - INSTALLATION, FRONT	5-59
BRAKE ROTOR - REMOVAL, FRONT	5-59
BRAKE ROTOR, EXPORT	5-60
BRAKE ROTOR MACHINING - STANDARD PROCEDURE	5-58
BRAKE ROTOR, SPECIFICATIONS	5-60
BRAKE SHOE LINING - INSPECTION, REAR DRUM	5-22
BRAKE SHOES - ADJUSTMENT, PARKING	5-85
BRAKE SHOES - ADJUSTMENT, REAR DRUM	5-23
BRAKE SHOES - CLEANING, DISC	5-16,5-18
BRAKE SHOES - INSPECTION, DISC	5-16,5-18
BRAKE SHOES - INSTALLATION, REAR DISC	5-19
BRAKE SHOES - INSTALLATION, REAR DRUM	5-22
BRAKE SHOES - REMOVAL, REAR DISC	5-17
BRAKE SHOES - REMOVAL, REAR DRUM	5-19
BRAKE SHOES (CONTINENTAL TEVES BRAKES) - INSTALLATION, FRONT DISC	5-16
BRAKE SHOES (CONTINENTAL TEVES BRAKES) - REMOVAL, FRONT DISC	5-15
BRAKE SHOES (TRW BRAKES) - INSTALLATION, FRONT DISC	5-17
BRAKE SHOES (TRW BRAKES) - REMOVAL, FRONT DISC	5-15
BRAKE SYSTEM - DESCRIPTION, ANTILOCK	5-87
BRAKE SYSTEM - DIAGNOSIS AND TESTING, BASE	5-4
BRAKE SYSTEM - OPERATION, ANTILOCK	5-88
BRAKE SYSTEM BLEEDING - STANDARD PROCEDURE, ANTILOCK	5-90
BRAKE SYSTEM (EXPORT) - DESCRIPTION, ANTILOCK	5-87
BRAKE SYSTEM, SPECIAL TOOLS - BASE	5-10
BRAKE TUBES AND HOSES - DESCRIPTION	5-14
BRAKE TUBES AND HOSES - INSPECTION	5-14
BRAKE TUBES AND HOSES - OPERATION	5-14
BRAKES - DESCRIPTION, BASE	5-3
BRAKES - OPERATION, BASE	5-3
BRAKES (EXPORT) - DESCRIPTION, BASE	5-3
BRAKES (EXPORT) - DESCRIPTION, DISC	5-13
BRAKES (FRONT) - DESCRIPTION, DISC	5-11
BRAKES (FRONT) - OPERATION, DISC	5-13
BRAKES (REAR) - DESCRIPTION, DISC	5-13
BRAKES (REAR) - DESCRIPTION, DRUM	5-13
BRAKES (REAR) - OPERATION, DISC	5-14
BRAKE/TRANSMISSION SHIFT INTERLOCK SOLENOID - DIAGNOSIS AND TESTING	21-115,21-266
BREAK-IN, STANDARD PROCEDURE - A/C CLUTCH	24-15
BUCKET - INSTALLATION, BUCKET SEAT BACK - QUAD	23-141
BUCKET - INSTALLATION, SEAT BELT BUCKLE - FIRST ROW INBOARD - QUAD	8O-36
BUCKET - REMOVAL, BUCKET SEAT BACK - QUAD	23-140
BUCKET - REMOVAL, SEAT BELT BUCKLE - FIRST ROW INBOARD - QUAD	8O-35
BUCKET, 50/50 SPLIT, BENCH - INSTALLATION, SEAT BACK HINGE COVERS - QUAD	23-146
BUCKET, 50/50 SPLIT, BENCH - INSTALLATION, SEAT CUSHION COVER - QUAD	23-144
BUCKET, 50/50 SPLIT, BENCH - REMOVAL, SEAT BACK HINGE COVERS - QUAD	23-146
BUCKET, 50/50 SPLIT, BENCH - REMOVAL, SEAT CUSHION COVER - QUAD	23-144
BUCKET SEAT BACK - QUAD BUCKET - INSTALLATION	23-141
BUCKET SEAT BACK - QUAD BUCKET - REMOVAL	23-140
BUCKET SEAT RISER - INSTALLATION, QUAD	23-143
BUCKET SEAT RISER - REMOVAL, QUAD	23-143
BUCKET SEAT SIDE SHIELD - NO CUP HOLDER - INSTALLATION, QUAD	23-143
BUCKET SEAT SIDE SHIELD - NO CUP HOLDER - REMOVAL, QUAD	23-143
BUCKET SEAT SIDE SHIELD/CUP HOLDER - FLAP AND SPRING ASSEMBLY - INSTALLATION, QUAD	23-151
BUCKET SEAT SIDE SHIELD/CUP HOLDER - FLAP AND SPRING ASSEMBLY - REMOVAL, QUAD	23-151
BUCKET SEAT SIDE SHIELD/CUP HOLDER - INSTALLATION, QUAD	23-142
BUCKET SEAT SIDE SHIELD/CUP HOLDER - REMOVAL, QUAD	23-141
BUCKLE - FIRST ROW - BENCH - INSTALLATION, SEAT BELT	8O-37
BUCKLE - FIRST ROW - BENCH - REMOVAL, SEAT BELT	8O-36
BUCKLE - FIRST ROW INBOARD - QUAD BUCKET - INSTALLATION, SEAT BELT	8O-36
BUCKLE - FIRST ROW INBOARD - QUAD BUCKET - REMOVAL, SEAT BELT	8O-35
BUCKLE - FRONT INBOARD - INSTALLATION, SEAT BELT	8O-35
BUCKLE - FRONT INBOARD - REMOVAL, SEAT BELT	8O-35
BUCKLE - SECOND ROW - THREE PASSENGER BENCH - INSTALLATION, SEAT BELT	8O-40
BUCKLE - SECOND ROW - THREE PASSENGER BENCH - REMOVAL, SEAT BELT	8O-40
BUCKLE - SECOND ROW INBOARD - 50/50 BENCH - INSTALLATION, SEAT BELT	8O-38
BUCKLE - SECOND ROW INBOARD - 50/50 BENCH - REMOVAL, SEAT BELT	8O-37
BUMPER - DESCRIPTION, JOUNCE	2-35
BUMPER - INSTALLATION, STOP	23-25
BUMPER - OPERATION, JOUNCE	2-35
BUMPER - REMOVAL, STOP	23-25
BUMPER BEZEL - INSTALLATION, SLIDING DOOR STOP	23-25
BUMPER BEZEL - REMOVAL, SLIDING DOOR STOP	23-25
BUMPER REINFORCEMENT - INSTALLATION, FRONT	13-3
BUMPER REINFORCEMENT - INSTALLATION, REAR	13-5
BUMPER REINFORCEMENT - REMOVAL, FRONT	13-3
BUMPER REINFORCEMENT - REMOVAL, REAR	13-5
BUS COMMUNICATION RECEIVE - PCM INPUT - OPERATION, DATA	8E-14
BUS, OPERATION - PROGRAMMABLE COMMUNICATIONS INTERFACE (PCI)	14-25
BUSHING - LEAF SPRING FRONT - INSTALLATION	2-30
BUSHING - LEAF SPRING FRONT - REMOVAL	2-29
BUSHINGS - INSTALLATION, FRONT CROSSMEMBER MOUNT	13-17
BUSHINGS - REMOVAL, FRONT CROSSMEMBER MOUNT	13-17
BUSHINGS (CONTINENTAL TEVES BRAKES) - ASSEMBLY, CALIPER GUIDE PIN	5-25
BUSHINGS (CONTINENTAL TEVES BRAKES) - DISASSEMBLY, CALIPER GUIDE PIN	5-24
CABIN HEATER - DESCRIPTION	24-113
CABIN HEATER, DIAGNOSIS AND TESTING - SUPPLEMENTAL	24-114
CABLE - DESCRIPTION	8P-4
CABLE - DESCRIPTION, ANTENNA BODY	8A-7
CABLE - DESCRIPTION, SPARK PLUG	8I-10
CABLE - INSTALLATION	8P-4
CABLE - INSTALLATION, GEAR SHIFT	21-234
CABLE - INSTALLATION, HOLD OPEN LATCH	23-38
CABLE - INSTALLATION, INSIDE HANDLE	23-38
CABLE - INSTALLATION, INSTRUMENT PANEL ANTENNA	8A-12
CABLE - INSTALLATION, LATCH RELEASE	23-64
CABLE - INSTALLATION, OUTSIDE HANDLE	23-37
CABLE - INSTALLATION, PARKING BRAKE LEVER AND FRONT	5-77
CABLE - INSTALLATION, THROTTLE CONTROL	14-40
CABLE - OPERATION	8P-4
CABLE - OPERATION, ANTENNA BODY	8A-7
CABLE - PARKING BRAKE INTERMEDIATE - INSTALLATION	5-69
CABLE - PARKING BRAKE INTERMEDIATE - REMOVAL	5-69
CABLE - REMOVAL	8P-4
CABLE - REMOVAL, GEAR SHIFT	21-233,21-84
CABLE - REMOVAL, HOLD OPEN LATCH	23-38
CABLE - REMOVAL, INSIDE HANDLE	23-37
CABLE - REMOVAL, INSTRUMENT PANEL ANTENNA	8A-12
CABLE - REMOVAL, LATCH RELEASE	23-63
CABLE - REMOVAL, OUTSIDE HANDLE	23-37
CABLE - REMOVAL, PARKING BRAKE LEVER AND FRONT	5-77
CABLE - REMOVAL, THROTTLE CONTROL	14-40
CABLE ADJUSTMENT, ADJUSTMENTS - GEARSHIFT	21-235
CABLE ADJUSTMENT, INSTALLATION - SYNCHRONIZING	23-105,23-147
CABLE, DIAGNOSIS AND TESTING - ANTENNA BODY	8A-8

Description	Group-Page
CABLE END CLEANING AND LUBRICATION - STANDARD PROCEDURE	5-65
CABLE RESISTANCE, SPECIFICATIONS - SPARK PLUG	8I-2
CABLES - ADJUSTMENT, PARKING BRAKE	5-65
CABLES - DESCRIPTION, BATTERY	8F-16
CABLES - OPERATION, BATTERY	8F-17
CABLES, DIAGNOSIS AND TESTING - BATTERY	8F-17
CALIBRATION, STANDARD PROCEDURE - A/C-HEATER CONTROL	24-19
CALIBRATION, STANDARD PROCEDURE - COMPASS	8M-4
CALIPER - CLEANING	5-25,5-29
CALIPER - INSPECTION	5-25,5-29
CALIPER - INSTALLATION, REAR DISC BRAKE	5-30
CALIPER - REMOVAL, REAR DISC BRAKE	5-28
CALIPER ADAPTER - INSTALLATION, FRONT DISC BRAKE	5-31
CALIPER ADAPTER - REMOVAL, FRONT DISC BRAKE	5-31
CALIPER (CONTINENTAL TEVES BRAKES) - INSTALLATION, FRONT DISC BRAKE	5-27
CALIPER (CONTINENTAL TEVES BRAKES) - REMOVAL, FRONT DISC BRAKE	5-24
CALIPER GUIDE PIN BUSHINGS (CONTINENTAL TEVES BRAKES) - ASSEMBLY	5-25
CALIPER GUIDE PIN BUSHINGS (CONTINENTAL TEVES BRAKES) - DISASSEMBLY	5-24
CALIPER GUIDE PINS (TRW BRAKES) - INSTALLATION, DISC BRAKE	5-32
CALIPER GUIDE PINS (TRW BRAKES) - REMOVAL, DISC BRAKE	5-31
CALIPER PISTON AND SEAL - ASSEMBLY	5-26,5-30
CALIPER PISTON AND SEAL - DISASSEMBLY	5-24,5-28
CALIPER (TRW BRAKES) - INSTALLATION, FRONT DISC BRAKE	5-27
CALIPER (TRW BRAKES) - REMOVAL, FRONT DISC BRAKE	5-24
CAMSHAFT & BEARINGS (IN BLOCK) - DESCRIPTION	9-118
CAMSHAFT & BEARINGS (IN BLOCK) - INSPECTION	9-118
CAMSHAFT & BEARINGS (IN BLOCK) - INSTALLATION	9-118
CAMSHAFT & BEARINGS (IN BLOCK) - OPERATION	9-118
CAMSHAFT & BEARINGS (IN BLOCK) - REMOVAL	9-118
CAMSHAFT END PLAY - STANDARD PROCEDURE, MEASURING	9-29
CAMSHAFT OIL SEAL(S) - INSTALLATION	9-29
CAMSHAFT OIL SEAL(S) - REMOVAL	9-28
CAMSHAFT POSITION SENSOR - DESCRIPTION	8I-4
CAMSHAFT POSITION SENSOR - OPERATION	8I-4
CAMSHAFT SPROCKET - INSTALLATION, TIMING CHAIN	9-160
CAMSHAFT SPROCKET - REMOVAL, TIMING CHAIN	9-159
CAMSHAFT SPROCKETS - INSTALLATION	9-67
CAMSHAFT SPROCKETS - REMOVAL	9-66
CAMSHAFT(S) - CLEANING	9-30
CAMSHAFT(S) - DESCRIPTION	9-29
CAMSHAFT(S) - INSPECTION	9-30
CAMSHAFT(S) - INSTALLATION	9-31
CAMSHAFT(S) - OPERATION	9-29
CAMSHAFT(S) - REMOVAL	9-30
CANISTER - DESCRIPTION, VAPOR	25-19
CANISTER - INSTALLATION, REAR EVAP	25-21
CANISTER - OPERATION, VAPOR	25-19
CANISTER - REMOVAL, REAR EVAP	25-20
CAP - DESCRIPTION, FUEL FILLER	25-13
CAP - DESCRIPTION, RADIATOR PRESSURE	7-27
CAP - INSTALLATION, INSTRUMENT PANEL RIGHT END	23-72
CAP - OPERATION, FUEL FILLER	25-13
CAP - OPERATION, RADIATOR PRESSURE	7-27
CAP - REMOVAL, INSTRUMENT PANEL RIGHT END	23-72
CAP TESTING - DIAGNOSIS AND TESTING, COOLING SYSTEM PRESSURE	7-28
CAP TO FILLER NECK SEAL - DIAGNOSIS AND TESTING, RADIATOR	7-28
CAPACITIES - SPECIFICATIONS, FLUID	0-6
CARE, CLEANING - WHEEL AND WHEEL TRIM	22-19
CARGO - INSTALLATION, AWD, HEAVY DUTY	2-36
CARGO - INSTALLATION, SPRING	2-40
CARGO - REMOVAL, AWD, HEAVY DUTY	2-36
CARGO - REMOVAL, SPRING	2-40
CARPET INSERT - FOLD-IN-FLOOR - INSTALLATION, SECOND ROW FLOOR TUB	23-98
CARPET INSERT - FOLD-IN-FLOOR - REMOVAL, SECOND ROW FLOOR TUB	23-98
CARPET TRIM RING AND COVER - FOLD-IN-FLOOR - INSTALLATION	23-84
CARPET TRIM RING AND COVER - FOLD-IN-FLOOR - REMOVAL	23-84
CARPETS - FOLD-IN-FLOOR - INSTALLATION	23-83
CARPETS - FOLD-IN-FLOOR - REMOVAL	23-82
CARPETS AND FLOOR MATS - INSTALLATION	23-81
CARPETS AND FLOOR MATS - REMOVAL	23-81
CARPETS INSERT - FOLD-IN-FLOOR - INSTALLATION, REAR FLOOR TUB	23-96
CARPETS INSERT - FOLD-IN-FLOOR - REMOVAL, REAR FLOOR TUB	23-95
CARRIER ASSEMBLY - DESCRIPTION, BALANCE SHAFTS	9-71
CARRIER ASSEMBLY - INSTALLATION, BALANCE SHAFTS	9-73
CARRIER ASSEMBLY - OPERATION, BALANCE SHAFTS	9-71
CARRIER ASSEMBLY - REMOVAL, BALANCE SHAFTS	9-71
CATALYTIC CONVERTER - DESCRIPTION	11-4
CATALYTIC CONVERTER - INSPECTION	11-6
CATALYTIC CONVERTER - INSTALLATION	11-6
CATALYTIC CONVERTER - OPERATION	11-4
CATALYTIC CONVERTER - REMOVAL	11-5
CAUTION, A/C SYSTEM	24-66
CAUTION, DESCRIPTION	5-4
CAUTION, DESCRIPTION	19-37
CAUTION, OPERATION	5-90
CAUTION, SENSOR - TPM	22-11
CAUTIONS, WARNING - WARNINGS	19-10,19-26
CD CHANGER - DESCRIPTION	8A-11
CD CHANGER - INSTALLATION	8A-11
CD CHANGER - OPERATION	8A-11
CD CHANGER - REMOVAL	8A-11
CENTER - DESCRIPTION, ELECTRONIC VEHICLE INFO	8M-7
CENTER - INSTALLATION, MESSAGE	8M-1
CENTER - OPERATION, ELECTRONIC VEHICLE INFO	8M-7
CENTER - REMOVAL, MESSAGE	8M-1
CENTER BEZEL - INSTALLATION, INSTRUMENT PANEL	23-72
CENTER BEZEL - REMOVAL, INSTRUMENT PANEL	23-71
CENTER BEZEL OUTLETS, INSTALLATION - FRONT	24-45
CENTER BEZEL OUTLETS, REMOVAL - FRONT	24-44
CENTER CONSOLE LAMP - INSTALLATION	8L-21
CENTER CONSOLE LAMP - REMOVAL	8L-21
CENTER CONSOLE LAMP SWITCH - INSTALLATION	8L-21
CENTER CONSOLE LAMP SWITCH - REMOVAL	8L-21
CENTER, DIAGNOSIS AND TESTING - ELECTRONIC VEHICLE INFORMATION	8M-8
CENTER HIGH MOUNTED STOP LAMP - INSTALLATION	8L-6
CENTER HIGH MOUNTED STOP LAMP - REMOVAL	8L-6
CENTER HIGH MOUNTED STOP LAMP UNIT - INSTALLATION	8L-6
CENTER HIGH MOUNTED STOP LAMP UNIT - REMOVAL	8L-6
CENTER HINGE - INSTALLATION	23-24
CENTER HINGE - REMOVAL	23-24
CENTER LAP BELT - FOLD-IN-FLOOR - INSTALLATION, SEAT BELT	23-157
CENTER LAP BELT - FOLD-IN-FLOOR - REMOVAL, SEAT BELT	23-157
CENTER PROGRAMMING, STANDARD PROCEDURE - ELECTRONIC VEHICLE INFORMATION	8M-8
CENTER STRIKER - INSTALLATION	23-28
CENTER STRIKER - REMOVAL	23-28
CENTERING - STANDARD PROCEDURE, CLOCKSPRING	8O-11
CHAIN AND CAMSHAFT SPROCKET - INSTALLATION, TIMING	9-160
CHAIN AND CAMSHAFT SPROCKET - REMOVAL, TIMING	9-159
CHAIN COVER - INSTALLATION, TIMING	9-157
CHAIN COVER - REMOVAL, TIMING	9-156
CHAIN WEAR - STANDARD PROCEDURE, MEASURING TIMING	9-155
CHANGE - STANDARD PROCEDURE, ENGINE OIL AND FILTER	9-139,9-54
CHANGER - DESCRIPTION, CD	8A-11
CHANGER - INSTALLATION, CD	8A-11
CHANGER - OPERATION, CD	8A-11
CHANGER - REMOVAL, CD	8A-11
CHANNEL - INSTALLATION, WATER	23-174
CHANNEL - REMOVAL, WATER	23-174
CHARGE LEVEL TEST, DIAGNOSIS AND TESTING - SYSTEM	24-67
CHARGE, STANDARD PROCEDURE - REFRIGERANT SYSTEM	24-71
CHARGING, STANDARD PROCEDURE - CONVENTIONAL BATTERY	8F-11
CHARGING, STANDARD PROCEDURE - SPIRAL PLATE BATTERY	8F-10
CHARGING SYSTEM - DESCRIPTION	8F-21
CHARGING SYSTEM - OPERATION	8F-21
CHARTS - DIAGNOSIS AND TESTING, STEERING SYSTEM DIAGNOSIS	19-3
CHARTS - SPECIFICATIONS, COLOR CODE	23-100
CHECK - DIAGNOSIS AND TESTING, COOLING SYSTEM FLOW	7-3
CHECK - DIAGNOSIS AND TESTING, EXHAUST SYSTEM RESTRICTION	11-2
CHECK - STANDARD PROCEDURE, COOLANT LEVEL	7-4
CHECK - STANDARD PROCEDURE, ENGINE OIL LEVEL	9-140
CHECK, STANDARD PROCEDURE - ENGINE OIL LEVEL	9-54
CHECK, STANDARD PROCEDURE - FLUID LEVEL AND CONDITION	21-230,21-82
CHECK STRAP - INSTALLATION	23-15
CHECK STRAP - REMOVAL	23-15
CHECKING - STANDARD PROCEDURE, BRAKE FLUID LEVEL	5-33
CHECKING - STANDARD PROCEDURE, POWER STEERING FLUID LEVEL	19-44
CHECKING BATTERY ELECTROLYTE LEVEL, STANDARD PROCEDURE	8F-14
CHECKING ENGINE OIL PRESSURE - DIAGNOSIS AND TESTING	9-53
CHECKING POWER STEERING BELT TENSION - STANDARD PROCEDURE	7-8
CHILD RESTRAINT ANCHOR - DESCRIPTION	8O-9
CHILD RESTRAINT ANCHOR - OPERATION	8O-10
CHILD SEAT - INSTALLATION, QUAD	23-106
CHILD SEAT - REMOVAL, QUAD	23-106
CHILD SEAT MODULE, BENCH SEAT - REMOVAL	23-104
CHIME SYSTEM - DIAGNOSIS AND TESTING	8B-2
CHIME/BUZZER - DESCRIPTION	8B-1
CHIME/BUZZER - OPERATION	8B-1
CHIME/BUZZER - WARNING	8B-2
CHIME/THERMISTOR - DESCRIPTION	8N-8
CHIME/THERMISTOR - INSTALLATION	8N-9
CHIME/THERMISTOR - OPERATION	8N-8
CHIME/THERMISTOR - REMOVAL	8N-8

Description	Group-Page
CHIRP PREFERENCE - STANDARD PROCEDURE, HORN	8N-24
CIRCUIT, DIAGNOSIS AND TESTING - AMBIENT TEMPERATURE SENSOR	8M-12
CIRCUIT FUNCTIONS - DESCRIPTION	8W-01-6
CIRCUIT INFORMATION - DESCRIPTION	8W-01-5
CIRCUIT RESISTANCE TEST - DIAGNOSIS AND TESTING, FEED	8F-35
CIRCUIT TEST - DIAGNOSIS AND TESTING, CONTROL	8F-33
CIRCUIT TEST - DIAGNOSIS AND TESTING, FEED	8F-36
CIRCUITS AND VALVES - OPERATION, HYDRAULIC	5-95
CIRCUITS, DESCRIPTION - NON-MONITORED	25-5
CLAMP - STANDARD PROCEDURE, HOSES	14-7
CLAMPS - DESCRIPTION, FUEL LINES/HOSES	14-7
CLAMPS - DESCRIPTION, HOSE	7-1
CLAMPS - OPERATION, HOSE	7-2
CLASSIFICATION MODULE - DESCRIPTION, OCCUPANT	8O-25
CLASSIFICATION MODULE - INSTALLATION, OCCUPANT	8O-26
CLASSIFICATION MODULE - OPERATION, OCCUPANT	8O-25
CLASSIFICATION MODULE - REMOVAL, OCCUPANT	8O-26
CLEARANCE - STANDARD PROCEDURE, MEASURING CONNECTING ROD BEARING	9-123
CLEARANCE USING PLASTIGAGE - STANDARD PROCEDURE, MEASURING BEARING	9-12,9-86
CLOCKSPRING - DESCRIPTION	8O-10
CLOCKSPRING - INSTALLATION	8O-12
CLOCKSPRING - OPERATION	8O-11
CLOCKSPRING - REMOVAL	8O-12
CLOCKSPRING CENTERING - STANDARD PROCEDURE	8O-11
CLUSTER - DESCRIPTION, INSTRUMENT	8J-1
CLUSTER - OPERATION, INSTRUMENT	8J-1
CLUSTER BEZEL - INSTALLATION	23-65
CLUSTER BEZEL - REMOVAL	23-65
CLUSTER DIAGNOSIS - DIAGNOSIS AND TESTING	8J-3
CLUSTER ILLUMINATION LAMPS - INSTALLATION	8L-21
CLUSTER ILLUMINATION LAMPS - REMOVAL	8L-21
CLUSTER LENS - INSTALLATION	8J-11
CLUSTER LENS - REMOVAL	8J-11
CLUTCH AIR PRESSURE TESTS - DIAGNOSIS AND TESTING	21-153,21-8
CLUTCH ASSEMBLY - ASSEMBLY, INPUT	21-246,21-95
CLUTCH ASSEMBLY - DISASSEMBLY, INPUT	21-237,21-86
CLUTCH BREAK-IN, STANDARD PROCEDURE - A/C	24-15
CLUTCH COIL, DIAGNOSIS AND TESTING - A/C COMPRESSOR	24-14
CLUTCH INSPECTION, STANDARD PROCEDURE	24-15
CLUTCH RELAY - DESCRIPTION, A/C COMPRESSOR	24-18
CLUTCH RELAY - INSTALLATION, A/C COMPRESSOR	24-19
CLUTCH RELAY - OPERATION, A/C COMPRESSOR	24-18
CLUTCH RELAY - REMOVAL, A/C COMPRESSOR	24-19
CLUTCH/COIL - DESCRIPTION, A/C COMPRESSOR	24-13
CLUTCH/COIL - OPERATION, A/C COMPRESSOR	24-13
CLUTCHES - DESCRIPTION, DRIVING	21-219, 21-74
CLUTCHES - DESCRIPTION, HOLDING	21-236, 21-86
CLUTCHES - OPERATION, DRIVING	21-219, 21-74
CLUTCHES - OPERATION, HOLDING	21-236, 21-86
COAT/CLEARCOAT FINISH - DESCRIPTION, BASE	23-101
CODE - DESCRIPTION, PAINT	23-101
CODE CHARTS - SPECIFICATIONS, COLOR	23-100
CODES - STANDARD PROCEDURE, OBTAINING DIAGNOSTIC TROUBLE	8E-15
CODES, STANDARD PROCEDURE - ERASING TRANSMITTER	8M-12
CODES, STANDARD PROCEDURE - SETTING TRANSMITTER	8M-12
COIL - DESCRIPTION, IGNITION	8I-6
COIL - OPERATION, IGNITION	8I-6
COIL, DIAGNOSIS AND TESTING - A/C COMPRESSOR CLUTCH	24-14
COLLAR - INSTALLATION, STRUCTURAL	9-49
COLLAR - REMOVAL, STRUCTURAL	9-49
COLOR CODE CHARTS - SPECIFICATIONS	23-100
COLUMN - DESCRIPTION, STEERING	19-10
COLUMN - DIAGNOSIS AND TESTING, STEERING	19-11
COLUMN COVER - INSTALLATION, LOWER STEERING	23-74
COLUMN COVER - INSTALLATION, OVER STEERING	23-76
COLUMN COVER - REMOVAL, LOWER STEERING	23-74
COLUMN COVER - REMOVAL, OVER STEERING	23-76
COLUMN FASTENER TORQUE, SPECIFICATIONS	19-17
COMBUSTION PRESSURE LEAKAGE TEST - DIAGNOSIS AND TESTING, CYLINDER	9-85,9-9
COMMUNICATION RECEIVE - PCM INPUT - OPERATION, DATA BUS	8E-14
COMMUNICATIONS INTERFACE (PCI) BUS, OPERATION - PROGRAMMABLE	14-25
COMPASS CALIBRATION, STANDARD PROCEDURE	8M-4
COMPASS DEMAGNETIZING, STANDARD PROCEDURE	8M-5
COMPASS MINI-TRIP COMPUTER, DIAGNOSIS AND TESTING	8M-10
COMPASS VARIATION ADJUSTMENT, STANDARD PROCEDURE	8M-5
COMPASS/MINI-TRIP COMPUTER - DESCRIPTION	8M-10
COMPASS/MINI-TRIP COMPUTER - OPERATION	8M-10
COMPRESSION PRESSURE TEST - DIAGNOSIS AND TESTING, CYLINDER	9-85,9-9
COMPRESSOR CLUTCH COIL, DIAGNOSIS AND TESTING - A/C	24-14
COMPRESSOR CLUTCH RELAY - DESCRIPTION, A/C	24-18
COMPRESSOR CLUTCH RELAY - INSTALLATION, A/C	24-19
COMPRESSOR CLUTCH RELAY - OPERATION, A/C	24-18
COMPRESSOR CLUTCH RELAY - REMOVAL, A/C	24-19
COMPRESSOR CLUTCH/COIL - DESCRIPTION, A/C	24-13
COMPRESSOR CLUTCH/COIL - OPERATION, A/C	24-13
COMPRESSOR, DESCRIPTION - A/C	24-72
COMPRESSOR, INSTALLATION - A/C	24-74
COMPRESSOR MOUNTING BRACKET, 2.4L ENGINE - A/C	24-74,24-75
COMPRESSOR NOISE DIAGNOSIS, DIAGNOSIS AND TESTING - A/C	24-72
COMPRESSOR, OPERATION - A/C	24-72
COMPRESSOR, REMOVAL - A/C	24-73
COMPUTER - DESCRIPTION, COMPASS/ MINI-TRIP	8M-10
COMPUTER - OPERATION, COMPASS/ MINI-TRIP	8M-10
COMPUTER, DIAGNOSIS AND TESTING - COMPASS MINI-TRIP	8M-10
CONCENTRATION TESTING - DIAGNOSIS AND TESTING, COOLANT	7-19
CONDENSER - DESCRIPTION, A/C	24-75
CONDENSER - OPERATION, A/C	24-75
CONDITION CHECK, STANDARD PROCEDURE - FLUID LEVEL	21-230,21-82
CONDITIONER, DESCRIPTION - HEATER AND AIR	24-1
CONDITIONER, OPERATION - HEATER AND AIR	24-4
CONNECT FITTING DISASSEMBLY/ ASSEMBLY - STANDARD PROCEDURE, TRANSMISSION COOLER LINE QUICK	7-38
CONNECTING ROD - DESCRIPTION, PISTON	9-119,9-44
CONNECTING ROD - INSTALLATION, PISTON	9-45
CONNECTING ROD - REMOVAL, PISTON	9-44
CONNECTING ROD BEARING CLEARANCE - STANDARD PROCEDURE, MEASURING	9-123
CONNECTING ROD, FITTING	9-46
CONNECTING RODS - STANDARD PROCEDURE, FITTING	9-119
CONNECTOR - DESCRIPTION, DATA LINK	8E-6
CONNECTOR - INSTALLATION	8W-01-11
CONNECTOR - OPERATION, DATA LINK	8E-6
CONNECTOR - REMOVAL	8W-01-11
CONNECTOR, GROUND AND SPLICE INFORMATION - DESCRIPTION	8W-01-7
CONNECTOR/GROUND/SPLICE LOCATION - DESCRIPTION	8W-91-1
CONSOLE - DESCRIPTION, OVERHEAD	8M-2
CONSOLE - FOLD-IN-FLOOR - INSTALLATION, FLOOR	23-89
CONSOLE - FOLD-IN-FLOOR - REMOVAL, FLOOR	23-89
CONSOLE - INSTALLATION, LOWER	23-73
CONSOLE - REMOVAL, LOWER	23-73
CONSOLE BASE TRAY - INSTALLATION, FLOOR	23-89
CONSOLE BASE TRAY - REMOVAL, FLOOR	23-89
CONSOLE, DIAGNOSIS AND TESTING - OVERHEAD	8M-3
CONSOLE KEY LOCK TUMBLER - FOLD-IN-FLOOR - INSTALLATION, FLOOR	23-90
CONSOLE KEY LOCK TUMBLER - FOLD-IN-FLOOR - REMOVAL, FLOOR	23-90
CONSOLE LAMP - INSTALLATION, CENTER	8L-21
CONSOLE LAMP - REMOVAL, CENTER	8L-21
CONSOLE LAMP SWITCH - INSTALLATION, CENTER	8L-21
CONSOLE LAMP SWITCH - REMOVAL, CENTER	8L-21
CONSOLE LID LATCH - FOLD-IN-FLOOR - INSTALLATION, FLOOR	23-90
CONSOLE LID LATCH - FOLD-IN-FLOOR - REMOVAL, FLOOR	23-90
CONSOLE, SPECIAL TOOLS - OVERHEAD	8M-7
CONTAINER - DESCRIPTION, COOLANT RECOVERY	7-20
CONTAINER - INSTALLATION, COOLANT RECOVERY	7-20
CONTAINER - OPERATION, COOLANT RECOVERY	7-20
CONTAINER - REMOVAL, COOLANT RECOVERY	7-20
CONTAMINATION - DIAGNOSIS AND TESTING, BRAKE FLUID	5-33
CONTINUITY - STANDARD PROCEDURE, TESTING	8W-01-9
CONTROL (4 SPEED EATX ONLY) - OPERATION, INTERACTIVE SPEED	8P-2
CONTROL ARM - DESCRIPTION, LOWER	2-12
CONTROL ARM - INSPECTION, LOWER	2-14
CONTROL ARM - INSTALLATION, LOWER	2-15
CONTROL ARM - OPERATION, LOWER	2-12
CONTROL ARM - REMOVAL, LOWER	2-12
CONTROL ARM (REAR BUSHING - HYDRO) - ASSEMBLY, LOWER	2-15
CONTROL ARM (REAR BUSHING - HYDRO) - DISASSEMBLY, LOWER	2-13
CONTROL ARM (REAR BUSHING - STANDARD) - ASSEMBLY, LOWER	2-14
CONTROL ARM (REAR BUSHING - STANDARD) - DISASSEMBLY, LOWER	2-13
CONTROL CABLE - INSTALLATION, THROTTLE	14-40
CONTROL CABLE - REMOVAL, THROTTLE	14-40
CONTROL CALIBRATION, STANDARD PROCEDURE - A/C-HEATER	24-19

Description	Group-Page
CONTROL CIRCUIT TEST - DIAGNOSIS AND TESTING	8F-33
CONTROL, DESCRIPTION - AUTOMATIC TEMPERATURE	24-3
CONTROL INFORMATION LABEL, DESCRIPTION - VEHICLE EMISSION	25-1
CONTROL MODULE - DESCRIPTION, BODY	8E-2
CONTROL MODULE - DESCRIPTION, FRONT	8E-7
CONTROL MODULE - DESCRIPTION, POWER LIFTGATE	8E-10
CONTROL MODULE - DESCRIPTION, SLIDING DOOR	8E-18
CONTROL MODULE - INSTALLATION, BODY	8E-4
CONTROL MODULE - OPERATION, BODY	8E-3
CONTROL MODULE - OPERATION, FRONT	8E-7
CONTROL MODULE - OPERATION, POWER LIFTGATE	8E-10
CONTROL MODULE - OPERATION, SLIDING DOOR	8E-18
CONTROL MODULE - REMOVAL, BODY	8E-4
CONTROL MODULE, DIAGNOSIS AND TESTING - FRONT	8E-7
CONTROL MODULE, DIAGNOSIS AND TESTING - POWER LIFTGATE	8E-10
CONTROL MODULE, DIAGNOSIS AND TESTING - SLIDING DOOR	8E-18
CONTROL MOTOR - DESCRIPTION, IDLE AIR	14-33
CONTROL MOTOR - INSTALLATION, IDLE AIR	14-33
CONTROL MOTOR - OPERATION, IDLE AIR	14-33
CONTROL MOTOR - REMOVAL, IDLE AIR	14-33
CONTROL, OPERATION - AUTOMATIC TEMPERATURE	24-5
CONTROL RELAY - DESCRIPTION, TRANSMISSION	21-130,21-281
CONTROL RELAY - OPERATION, TRANSMISSION	21-130,21-281
CONTROL SWITCH - DIAGNOSIS AND TESTING, TRACTION	5-94
CONTROL SWITCH - INSTALLATION, TRACTION	5-95
CONTROL SWITCH - REMOVAL, TRACTION	5-95
CONTROL SYSTEM - DESCRIPTION, TRACTION	5-88
CONTROL SYSTEM - OPERATION, EVAPORATION	25-11
CONTROL SYSTEM - OPERATION, TRACTION	5-89
CONTROL SYSTEM, OPERATION - AUTOMATIC TEMPERATURE	24-114
CONTROL SYSTEM, OPERATION - MANUAL TEMPERATURE	24-113
CONTROLLER - DESCRIPTION, OCCUPANT RESTRAINT	8O-27
CONTROLLER - INSTALLATION, OCCUPANT RESTRAINT	8O-29
CONTROLLER - INSTALLATION, SBEC	8E-17
CONTROLLER - OPERATION, OCCUPANT RESTRAINT	8O-28
CONTROLLER - REMOVAL, NGC	8E-16
CONTROLLER - REMOVAL, OCCUPANT RESTRAINT	8O-29
CONTROLLER - REMOVAL, SBEC	8E-16
CONTROLLER ANTILOCK BRAKE - DESCRIPTION	8E-4
CONTROLLER ANTILOCK BRAKE - INSTALLATION	8E-6
CONTROLLER ANTILOCK BRAKE - OPERATION	8E-5
CONTROLLER ANTILOCK BRAKE - REMOVAL	8E-5
CONVENTIONAL BATTERY CHARGING, STANDARD PROCEDURE	8F-11
CONVERTER - DESCRIPTION, CATALYTIC	11-4
CONVERTER - DESCRIPTION, TORQUE	21-124, 21-275
CONVERTER - INSPECTION, CATALYTIC	11-6
CONVERTER - INSTALLATION, CATALYTIC	11-6
CONVERTER - INSTALLATION, TORQUE	21-129, 21-280
CONVERTER - OPERATION, CATALYTIC	11-4
CONVERTER - OPERATION, TORQUE	21-128, 21-278
CONVERTER - REMOVAL, CATALYTIC	11-5
CONVERTER - REMOVAL, TORQUE	21-129, 21-280
CONVERTER HOUSING FLUID LEAKAGE - DIAGNOSIS AND TESTING, TORQUE	21-154,21-9
COOL DOWN TEST, DIAGNOSIS AND TESTING - A/C	24-6
COOLANT - DESCRIPTION, ENGINE	7-19
COOLANT - DESCRIPTION, ENGINE	0-3
COOLANT - STANDARD PROCEDURE, ADDING ADDITIONAL	7-4
COOLANT CONCENTRATION TESTING - DIAGNOSIS AND TESTING	7-19
COOLANT LEVEL CHECK - STANDARD PROCEDURE	7-4
COOLANT RECOVERY CONTAINER - DESCRIPTION	7-20
COOLANT RECOVERY CONTAINER - INSTALLATION	7-20
COOLANT RECOVERY CONTAINER - OPERATION	7-20
COOLANT RECOVERY CONTAINER - REMOVAL	7-20
COOLANT RECOVERY SYSTEM - DIAGNOSIS AND TESTING	7-20
COOLANT SERVICE - STANDARD PROCEDURE	7-19
COOLANT TEMPERATURE SENSOR - 2.4L - DESCRIPTION, ENGINE	7-21
COOLANT TEMPERATURE SENSOR - 2.4L - INSTALLATION, ENGINE	7-21
COOLANT TEMPERATURE SENSOR - 2.4L - REMOVAL, ENGINE	7-21
COOLANT TEMPERATURE SENSOR - 3.3/3.8L - DESCRIPTION, ENGINE	7-21
COOLANT TEMPERATURE SENSOR - 3.3/3.8L - INSTALLATION, ENGINE	7-23
COOLANT TEMPERATURE SENSOR - 3.3/3.8L - REMOVAL, ENGINE	7-21
COOLANT THERMOSTAT - 2.4L - INSTALLATION, ENGINE	7-24
COOLANT THERMOSTAT - 2.4L - REMOVAL, ENGINE	7-24
COOLANT THERMOSTAT - 3.3/3.8L - INSTALLATION, ENGINE	7-25
COOLANT THERMOSTAT - 3.3/3.8L - REMOVAL, ENGINE	7-24
COOLANT THERMOSTAT - DESCRIPTION, ENGINE	7-23
COOLANT THERMOSTAT - DIAGNOSIS AND TESTING, ENGINE	7-23
COOLANT THERMOSTAT - OPERATION, ENGINE	7-23
COOLER - DESCRIPTION, FLUID	19-45
COOLER - DESCRIPTION, TRANSMISSION OIL	7-39
COOLER - INSPECTION, TRANSMISSION OIL	7-39
COOLER - INSTALLATION, FLUID	19-45
COOLER & LINES - DESCRIPTION, OIL	9-141
COOLER & LINES - INSTALLATION, OIL	9-141
COOLER & LINES - OPERATION, OIL	9-141
COOLER & LINES - REMOVAL, OIL	9-141
COOLER - OPERATION, FLUID	19-45
COOLER - REMOVAL, FLUID	19-45
COOLER LINE QUICK CONNECT FITTING DISASSEMBLY/ASSEMBLY - STANDARD PROCEDURE, TRANSMISSION	7-38
COOLER LINES - INSTALLATION, TRANSMISSION OIL	7-40
COOLER LINES - REMOVAL, TRANSMISSION OIL	7-39
COOLING SYSTEM - DESCRIPTION	7-1
COOLING SYSTEM - DIAGNOSIS AND TESTING, ENGINE	7-14
COOLING SYSTEM - OPERATION	7-2
COOLING SYSTEM AERATION - DIAGNOSIS AND TESTING	7-4
COOLING SYSTEM DEAERATION - DIAGNOSIS AND TESTING	7-4
COOLING SYSTEM DRAINING - STANDARD PROCEDURE	7-4
COOLING SYSTEM FILLING - STANDARD PROCEDURE	7-4
COOLING SYSTEM FLOW CHECK - DIAGNOSIS AND TESTING	7-3
COOLING SYSTEM LEAK TEST - DIAGNOSIS AND TESTING	7-2
COOLING SYSTEM PRESSURE CAP TESTING - DIAGNOSIS AND TESTING	7-28
COOLING SYSTEM REQUIREMENTS, DESCRIPTION - ENGINE	24-1
COOLING SYSTEM, SPECIAL TOOLS	7-6
COOLING SYSTEM, WARNING - ENGINE	24-65
CORE - DESCRIPTION, HEATER	24-102,24-83
CORE - DESCRIPTION, SERVICE PORT VALVE	24-95
CORE - INSTALLATION, SERVICE PORT VALVE	24-95
CORE - OPERATION, HEATER	24-102,24-84
CORE - REMOVAL, SERVICE PORT VALVE	24-95
CORE AND OIL GALLERY PLUGS - STANDARD PROCEDURE, ENGINE	9-10,9-88
CORE FILLING, STANDARD PROCEDURE - REAR HEATER	24-102
CORE, INSTALLATION - FRONT HEATER	24-86
CORE, REMOVAL - FRONT HEATER	24-85
CORE TUBES, INSTALLATION - FRONT HEATER	24-85
CORE TUBES, REMOVAL - FRONT HEATER	24-84
COURTESY LAMP - INSTALLATION	8L-21
COURTESY LAMP - REMOVAL	8L-21
COVER - CLEANING, CYLINDER HEAD	9-31
COVER - DESCRIPTION, WHEEL	22-19
COVER - FOLD-IN-FLOOR - INSTALLATION, CARPET TRIM RING	23-84
COVER - FOLD-IN-FLOOR - REMOVAL, CARPET TRIM RING	23-84
COVER - INSPECTION, CYLINDER HEAD	9-31
COVER - INSTALLATION, BENCH SEAT BACK	23-148
COVER - INSTALLATION, CYLINDER HEAD	9-32
COVER - INSTALLATION, FRONT SEAT BACK	23-116
COVER - INSTALLATION, FRONT SEAT CUSHION SIDE	23-121
COVER - INSTALLATION, FRONT SEAT TRACK - REAR	23-128
COVER - INSTALLATION, INSTRUMENT PANEL TOP	23-72
COVER - INSTALLATION, LOWER STEERING COLUMN	23-74
COVER - INSTALLATION, OVER STEERING COLUMN	23-76
COVER - INSTALLATION, TIMING CHAIN	9-157
COVER - INSTALLATION, WHEEL	22-20
COVER - LEFT - INSTALLATION, CYLINDER HEAD	9-107
COVER - LEFT - REMOVAL, CYLINDER HEAD	9-107
COVER - OCS - INSTALLATION, FRONT SEAT CUSHION SIDE	23-122
COVER - OCS - INSTALLATION, FRONT SEAT TRACK REAR	23-129
COVER - OCS - REMOVAL, FRONT SEAT CUSHION SIDE	23-121
COVER - OCS - REMOVAL, FRONT SEAT TRACK REAR	23-129
COVER - QUAD BUCKET, 50/50 SPLIT, BENCH - INSTALLATION, SEAT CUSHION	23-144
COVER - QUAD BUCKET, 50/50 SPLIT, BENCH - REMOVAL, SEAT CUSHION	23-144
COVER - REMOVAL, BENCH SEAT BACK	23-148
COVER - REMOVAL, CYLINDER HEAD	9-31
COVER - REMOVAL, FRONT SEAT BACK	23-113
COVER - REMOVAL, FRONT SEAT CUSHION SIDE	23-120
COVER - REMOVAL, FRONT SEAT TRACK - REAR	23-128
COVER - REMOVAL, INSTRUMENT PANEL TOP	23-72
COVER - REMOVAL, LOWER STEERING COLUMN	23-74
COVER - REMOVAL, OVER STEERING COLUMN	23-76
COVER - REMOVAL, TIMING CHAIN	9-156
COVER - REMOVAL, WHEEL	22-19

Description	Group-Page
COVER - RIGHT - INSTALLATION, CYLINDER HEAD	9-106
COVER - RIGHT - REMOVAL, CYLINDER HEAD	9-106
COVER/FOAM - SECOND ROW - FOLD-IN-FLOOR - INSTALLATION, SEAT BACK	23-133
COVER/FOAM - SECOND ROW - FOLD-IN-FLOOR - REMOVAL, SEAT BACK	23-133
COVER/FOAM - THIRD ROW - FOLD-IN-FLOOR - INSTALLATION, SEAT BACK	23-156
COVER/FOAM - THIRD ROW - FOLD-IN-FLOOR - INSTALLATION, SEAT CUSHION	23-159
COVER/FOAM - THIRD ROW - FOLD-IN-FLOOR - REMOVAL, SEAT BACK	23-155
COVER/FOAM - THIRD ROW - FOLD-IN-FLOOR - REMOVAL, SEAT CUSHION	23-159
COVER/FOAM -SECOND ROW - FOLD-IN-FLOOR - INSTALLATION, SEAT CUSHION	23-136
COVER/FOAM -SECOND ROW - FOLD-IN-FLOOR - REMOVAL, SEAT CUSHION	23-136
COVER(S) - DESCRIPTION, CYLINDER HEAD	9-105
COVER(S) - INSTALLATION, TIMING BELT	9-64
COVERS - QUAD BUCKET, 50/50 SPLIT, BENCH - INSTALLATION, SEAT BACK HINGE	23-146
COVERS - QUAD BUCKET, 50/50 SPLIT, BENCH - REMOVAL, SEAT BACK HINGE	23-146
COVER(S) - REMOVAL, TIMING BELT	9-63
COWL GRILLE - INSTALLATION	23-50
COWL GRILLE - REMOVAL	23-50
COWL TRIM - INSTALLATION	23-88
COWL TRIM - REMOVAL	23-88
C-PILLAR - INSTALLATION, SEAT BELT HEIGHT ADJUSTER - B OR	8O-38
C-PILLAR - REMOVAL, SEAT BELT HEIGHT ADJUSTER - B OR	8O-38
C-PILLAR TRIM - INSTALLATION	23-88
C-PILLAR TRIM - REMOVAL	23-88
CRADLE CROSSMEMBER - DESCRIPTION, FRONT	13-14
CRADLE CROSSMEMBER THREAD REPAIR - DESCRIPTION, FRONT	13-14
CRANK - INSTALLATION, WINDOW	23-21
CRANK - REMOVAL, WINDOW	23-21
CRANKSHAFT - INSPECTION	9-38
CRANKSHAFT - INSTALLATION	9-39
CRANKSHAFT - REMOVAL	9-37
CRANKSHAFT END PLAY - STANDARD PROCEDURE	9-37
CRANKSHAFT END PLAY - STANDARD PROCEDURE, MEASURING	9-128
CRANKSHAFT MAIN BEARINGS - INSTALLATION	9-127
CRANKSHAFT MAIN BEARINGS - REMOVAL	9-127
CRANKSHAFT OIL SEAL - FRONT - INSTALLATION	9-130,9-42
CRANKSHAFT OIL SEAL - FRONT - REMOVAL	9-130,9-41
CRANKSHAFT OIL SEAL - REAR - INSTALLATION	9-131,9-42
CRANKSHAFT OIL SEAL - REAR - REMOVAL	9-131,9-42
CRANKSHAFT POSITION SENSOR - DESCRIPTION	14-29
CRANKSHAFT POSITION SENSOR - OPERATION	14-29
CRANKSHAFT POSITION SENSOR - REMOVAL	14-30
CRANKSHAFT REAR OIL SEAL RETAINER - INSTALLATION	9-132
CRANKSHAFT REAR OIL SEAL RETAINER - REMOVAL	9-132
CRANKSHAFT SPROCKET - INSTALLATION	9-160,9-67
CRANKSHAFT SPROCKET - REMOVAL	9-159, 9-66
CROSSBAR - INSTALLATION, LUGGAGE RACK	23-59
CROSSBAR - REMOVAL, LUGGAGE RACK	23-58
CROSSMEMBER - DESCRIPTION, FRONT CRADLE	13-14
CROSSMEMBER - INSTALLATION, UPPER RADIATOR	23-56
CROSSMEMBER - REMOVAL, UPPER RADIATOR	23-56
CROSSMEMBER MOUNT BUSHINGS - INSTALLATION, FRONT	13-17
CROSSMEMBER MOUNT BUSHINGS - REMOVAL, FRONT	13-17
CROSSMEMBER THREAD REPAIR - DESCRIPTION, FRONT CRADLE	13-14
CROSS-OVER PIPE - 3.3/3.8L - INSTALLATION	11-6
CROSS-OVER PIPE - 3.3/3.8L - REMOVAL	11-6
CUP HOLDER - FOLD-IN-FLOOR - INSTALLATION, SIDE SHIELD	23-160
CUP HOLDER - FOLD-IN-FLOOR - REMOVAL, SIDE SHIELD	23-160
CUP HOLDER - INSTALLATION	23-65
CUP HOLDER - INSTALLATION, QUAD BUCKET SEAT SIDE SHIELD - NO	23-143
CUP HOLDER - REMOVAL	23-65
CUP HOLDER - REMOVAL, QUAD BUCKET SEAT SIDE SHIELD - NO	23-143
CURB HEIGHT MEASUREMENT - STANDARD PROCEDURE	2-55
CURTAIN AIRBAG - DESCRIPTION	8O-12
CURTAIN AIRBAG - INSTALLATION	8O-16
CURTAIN AIRBAG - OPERATION	8O-13
CURTAIN AIRBAG - REMOVAL	8O-14
CUSHION - INSTALLATION, FRONT SEAT	23-118
CUSHION - INSTALLATION, QUAD SEAT	23-141
CUSHION - INSTALLATION, STABILIZER BAR	2-4
CUSHION - OCS - INSTALLATION, FRONT SEAT	23-120
CUSHION - OCS - REMOVAL, FRONT SEAT	23-119
CUSHION - REMOVAL, FRONT SEAT	23-117
CUSHION - REMOVAL, QUAD SEAT	23-141
CUSHION - REMOVAL, STABILIZER BAR	2-4
CUSHION COVER - QUAD BUCKET, 50/50 SPLIT, BENCH - INSTALLATION, SEAT	23-144
CUSHION COVER - QUAD BUCKET, 50/50 SPLIT, BENCH - REMOVAL, SEAT	23-144
CUSHION COVER/FOAM - THIRD ROW - FOLD-IN-FLOOR - INSTALLATION, SEAT	23-159
CUSHION COVER/FOAM - THIRD ROW - FOLD-IN-FLOOR - REMOVAL, SEAT	23-159
CUSHION COVER/FOAM -SECOND ROW - FOLD-IN-FLOOR - INSTALLATION, SEAT	23-136
CUSHION COVER/FOAM -SECOND ROW - FOLD-IN-FLOOR - REMOVAL, SEAT	23-136
CUSHION PAN PANEL-THIRD ROW - FOLD-IN-FLOOR - INSTALLATION, BOTTOM OF SEAT	23-152
CUSHION PAN PANEL-THIRD ROW - FOLD-IN-FLOOR - REMOVAL, BOTTOM OF SEAT	23-152
CUSHION SIDE COVER - INSTALLATION, FRONT SEAT	23-121
CUSHION SIDE COVER - OCS - INSTALLATION, FRONT SEAT	23-122
CUSHION SIDE COVER - OCS - REMOVAL, FRONT SEAT	23-121
CUSHION SIDE COVER - REMOVAL, FRONT SEAT	23-120
CUSHION SIDE SHIELD - SECOND ROW - FOLD-IN-FLOOR - INSTALLATION, SEAT	23-138
CUSHION SIDE SHIELD - SECOND ROW - FOLD-IN-FLOOR - REMOVAL, SEAT	23-138
CV BOOT - INNER - INSTALLATION	3-7
CV BOOT - INNER - REMOVAL	3-6
CV BOOT - OUTER - INSTALLATION	3-11
CV BOOT - OUTER - REMOVAL	3-10
CYCLE, STANDARD PROCEDURE - POWER LIFTGATE LEARN	8N-8
CYCLE, STANDARD PROCEDURE - POWER SLIDING DOOR LEARN	8N-48
CYLINDER - DESCRIPTION, KEY/LOCK	19-20
CYLINDER - DESCRIPTION, STANDARD 4	8I-9
CYLINDER - INSTALLATION, KEY/LOCK	19-20
CYLINDER - INSTALLATION, LOCK	23-19,23-42
CYLINDER - INSTALLATION, SUPPORT	23-43
CYLINDER - OPERATION, KEY/LOCK	19-20
CYLINDER - REMOVAL, KEY/LOCK	19-20
CYLINDER - REMOVAL, LOCK	23-19,23-42
CYLINDER - REMOVAL, SUPPORT	23-42
CYLINDER BLEEDING - STANDARD PROCEDURE, MASTER	5-36
CYLINDER BORE FITTING - STANDARD PROCEDURE, PISTON TO	9-44
CYLINDER BORE HONING - STANDARD PROCEDURE	9-115,9-36
CYLINDER COMBUSTION PRESSURE LEAKAGE TEST - DIAGNOSIS AND TESTING	9-85,9-9
CYLINDER COMPRESSION PRESSURE TEST - DIAGNOSIS AND TESTING	9-85,9-9
CYLINDER (FLUID RESERVOIR) - ASSEMBLY, MASTER	5-39
CYLINDER (FLUID RESERVOIR) - DISASSEMBLY, MASTER	5-38
CYLINDER HEAD - CLEANING	9-103,9-26
CYLINDER HEAD - DESCRIPTION	9-102,9-25
CYLINDER HEAD - INSPECTION	9-104,9-27
CYLINDER HEAD - INSTALLATION	9-104,9-27
CYLINDER HEAD - REMOVAL	9-103,9-26
CYLINDER HEAD COVER - CLEANING	9-31
CYLINDER HEAD COVER - INSPECTION	9-31
CYLINDER HEAD COVER - INSTALLATION	9-32
CYLINDER HEAD COVER - LEFT - INSTALLATION	9-107
CYLINDER HEAD COVER - LEFT - REMOVAL	9-107
CYLINDER HEAD COVER - REMOVAL	9-31
CYLINDER HEAD COVER - RIGHT - INSTALLATION	9-106
CYLINDER HEAD COVER - RIGHT - REMOVAL	9-106
CYLINDER HEAD COVER(S) - DESCRIPTION	9-105
CYLINDER HEAD GASKET - DIAGNOSIS AND TESTING	9-102,9-25
CYLINDER HEAD OFF - INSTALLATION	9-111, 9-33
CYLINDER HEAD OFF - REMOVAL	9-109,9-33
CYLINDER HEAD ON - INSTALLATION	9-111, 9-33
CYLINDER HEAD ON - REMOVAL	9-111,9-33
CYLINDER LOCK SWITCH - EXPORT - DESCRIPTION, DOOR	8N-22
CYLINDER LOCK SWITCH - EXPORT - OPERATION, DOOR	8N-22
CYLINDER LOCK SWITCH, EXPORT - DOOR	8N-22
CYLINDERS - INSPECTION, WHEEL	5-62
CYLINDERS - INSTALLATION, WHEEL	5-62
CYLINDERS - REMOVAL, WHEEL	5-62
DAMAGED OR WORN THREADS - STANDARD PROCEDURE, REPAIR OF	9-10,9-88
DAMPER - INSTALLATION, VIBRATION	9-132, 9-49
DAMPER - REMOVAL, VIBRATION	9-132,9-48
DATA BUS COMMUNICATION RECEIVE - PCM INPUT - OPERATION	8E-14
DATA LINK CONNECTOR - DESCRIPTION	8E-6
DATA LINK CONNECTOR - OPERATION	8E-6
DAY / NIGHT MIRROR - DESCRIPTION, AUTOMATIC	8N-28
DAY / NIGHT MIRROR - OPERATION, AUTOMATIC	8N-28
DAY / NIGHT MIRROR, DIAGNOSIS AND TESTING - AUTOMATIC	8N-28
DEAERATION - DIAGNOSIS AND TESTING, COOLING SYSTEM	7-4
DECOUPLER PULLEY - DESCRIPTION, GENERATOR	8F-28
DECOUPLER PULLEY - DIAGNOSIS AND TESTING, GENERATOR	8F-28
DECOUPLER PULLEY - INSTALLATION, GENERATOR	8F-29
DECOUPLER PULLEY - OPERATION, GENERATOR	8F-28
DECOUPLER PULLEY - REMOVAL, GENERATOR	8F-29
DEFINITION, DESCRIPTION - TRIP	25-1
DEFLECTOR - INSTALLATION, WIND	23-174
DEFLECTOR - REMOVAL, WIND	23-174

Description	Group-Page
DEFOGGER RELAY - DESCRIPTION, REAR WINDOW	8G-3
DEFOGGER RELAY - INSTALLATION, REAR WINDOW	8G-4
DEFOGGER RELAY - OPERATION, REAR WINDOW	8G-3
DEFOGGER RELAY - REMOVAL, REAR WINDOW	8G-4
DEFOGGER SWITCH - DESCRIPTION, REAR WINDOW	8G-4
DEFOGGER SWITCH - OPERATION, REAR WINDOW	8G-4
DEFROSTER DUCT - INSTALLATION	24-50
DEFROSTER DUCT - REMOVAL	24-49
DEMAGNETIZING, STANDARD PROCEDURE - COMPASS	8M-5
DEMISTER DUCTS - INSTALLATION, INSTRUMENT PANEL	24-54
DEMISTER DUCTS - REMOVAL, INSTRUMENT PANEL	24-54
DEMISTER OUTLETS, INSTALLATION - FRONT	24-45
DEMISTER OUTLETS, REMOVAL - FRONT	24-44
DEPLOYMENT - STANDARD PROCEDURE, SERVICE AFTER AN AIRBAG	8O-7
DETECTION ASSY - INSTALLATION, NATURAL VAC LEAK	25-14
DETECTION ASSY - REMOVAL, NATURAL VAC LEAK	25-14
DETECTION PUMP - INSTALLATION, LEAK	25-15
DETECTION PUMP - REMOVAL, LEAK	25-15
DEVICES - STANDARD PROCEDURE, ELECTROSTATIC DISCHARGE (ESD) SENSITIVE	8W-01-8
DIAGNOSTIC SYSTEM, DIAGNOSIS AND TESTING - ON-BOARD	8F-22
DIAGNOSTIC TROUBLE CODES - STANDARD PROCEDURE, OBTAINING	8E-15
DIAGRAMS - 4XTE TRANSAXLE HYDRAULIC SCHEMATICS, SCHEMATICS	21-199,21-54
DIAGRAMS - DESCRIPTION, HOW TO USE WIRING	8W-01-1
DIAGRAMS - SPECIAL TOOLS, SCHEMATICS	21-68
DIESEL - DESCRIPTION	19-52
DIESEL - INSTALLATION	19-53
DIESEL - REMOVAL	19-52
DIESEL ENGINE - DESCRIPTION, FUEL REQUIREMENTS	0-6
DIESEL ENGINES - DESCRIPTION, ENGINE OIL	0-6
DIESEL ENGINES - EXPORT - DESCRIPTION	0-21
DIESEL ENGINES, INSTALLATION - 2.5L/2.8L	24-78
DIESEL ENGINES, REMOVAL - 2.5L/2.8L	24-77
DIFFERENTIAL BEARING PRELOAD - ADJUSTMENT	21-228
DIFFERENTIAL BEARING PRELOAD MEASUREMENT AND ADJUSTMENT, ADJUSTMENTS	21-79
DIMENSIONS - FOLD-IN-FLOOR SEATS ONLY - SPECIFICATIONS, FRAME	13-11
DIMENSIONS - SPECIFICATIONS, BODY OPENING	23-180
DIMENSIONS - SPECIFICATIONS, FRAME	13-6
DIODE - INSTALLATION	8W-01-14
DIODE - REMOVAL	8W-01-14
DISABLED INDICATOR - DESCRIPTION, PASSENGER AIRBAG	8O-33
DISABLED INDICATOR - INSTALLATION, PASSENGER AIRBAG	8O-34
DISABLED INDICATOR - OPERATION, PASSENGER AIRBAG	8O-33
DISABLED INDICATOR - REMOVAL, PASSENGER AIRBAG	8O-34
DISASSEMBLY/ASSEMBLY - STANDARD PROCEDURE, TRANSMISSION COOLER LINE QUICK CONNECT FITTING	7-38
DISC BRAKE CALIPER - INSTALLATION, REAR	5-30
DISC BRAKE CALIPER - REMOVAL, REAR	5-28
DISC BRAKE CALIPER ADAPTER - INSTALLATION, FRONT	5-31
DISC BRAKE CALIPER ADAPTER - REMOVAL, FRONT	5-31
DISC BRAKE CALIPER (CONTINENTAL TEVES BRAKES) - INSTALLATION, FRONT	5-27
DISC BRAKE CALIPER (CONTINENTAL TEVES BRAKES) - REMOVAL, FRONT	5-24
DISC BRAKE CALIPER GUIDE PINS (TRW BRAKES) - INSTALLATION	5-32
DISC BRAKE CALIPER GUIDE PINS (TRW BRAKES) - REMOVAL	5-31
DISC BRAKE CALIPER (TRW BRAKES) - INSTALLATION, FRONT	5-27
DISC BRAKE CALIPER (TRW BRAKES) - REMOVAL, FRONT	5-24
DISC BRAKE SHOES - CLEANING	5-16,5-18
DISC BRAKE SHOES - INSPECTION	5-16,5-18
DISC BRAKE SHOES - INSTALLATION, REAR	5-19
DISC BRAKE SHOES - REMOVAL, REAR	5-17
DISC BRAKE SHOES (CONTINENTAL TEVES BRAKES) - INSTALLATION, FRONT	5-16
DISC BRAKE SHOES (CONTINENTAL TEVES BRAKES) - REMOVAL, FRONT	5-15
DISC BRAKE SHOES (TRW BRAKES) - INSTALLATION, FRONT	5-17
DISC BRAKE SHOES (TRW BRAKES) - REMOVAL, FRONT	5-15
DISC BRAKES (EXPORT) - DESCRIPTION	5-13
DISC BRAKES (FRONT) - DESCRIPTION	5-11
DISC BRAKES (FRONT) - OPERATION	5-13
DISC BRAKES (REAR) - DESCRIPTION	5-13
DISC BRAKES (REAR) - OPERATION	5-14
DISCHARGE (ESD) SENSITIVE DEVICES - STANDARD PROCEDURE, ELECTROSTATIC	8W-01-8
DISCHARGE LINE - INSTALLATION, A/C	24-80
DISCHARGE LINE - REMOVAL, A/C	24-79
DISPLAY - DESCRIPTION, PARK ASSIST	8B-3
DISPLAY - INSTALLATION, PARK ASSIST	8B-4
DISPLAY - OPERATION, PARK ASSIST	8B-3
DISPLAY - REMOVAL, PARK ASSIST	8B-4
DISPLAY TEST MODE, OPERATION - DRB III® STATE	25-10
DISSASEMBLY, REMOVAL	24-51
DISTRIBUTION DUCT - INSTALLATION	24-57
DISTRIBUTION DUCT - REMOVAL	24-57
DISTRIBUTION DUCTS - INSTALLATION, FLOOR	24-50
DISTRIBUTION DUCTS - REMOVAL, FLOOR	24-50
DISTRIBUTION SYSTEM - DESCRIPTION, POWER	8W-97-1
DISTRIBUTION SYSTEM - OPERATION, POWER	8W-97-1
DISTRIBUTION SYSTEMS, SPECIAL TOOLS - POWER	8W-97-1
DOES NOT FILL - DIAGNOSIS AND TESTING, VEHICLE	25-17
DOME/CARGO LAMP - INSTALLATION	8L-22
DOME/CARGO LAMP - REMOVAL	8L-22
DOOR - INSTALLATION	23-15
DOOR - INSTALLATION, FUEL FILL	23-52
DOOR - INSTALLATION, SLIDING	23-29
DOOR - REMOVAL	23-15
DOOR - REMOVAL, FUEL FILL	23-52
DOOR - REMOVAL, SLIDING	23-29
DOOR ACTUATOR - DESCRIPTION, BLEND	24-22,24-34
DOOR ACTUATOR - DESCRIPTION, MODE	24-29
DOOR ACTUATOR - DESCRIPTION, RECIRCULATION	24-31
DOOR ACTUATOR - INSTALLATION, BLEND	24-22,24-35
DOOR ACTUATOR - INSTALLATION, MODE	24-30
DOOR ACTUATOR - INSTALLATION, RECIRCULATION	24-32
DOOR ACTUATOR - OPERATION, BLEND	24-22, 24-35
DOOR ACTUATOR - OPERATION, MODE	24-29
DOOR ACTUATOR - OPERATION, RECIRCULATION	24-31
DOOR ACTUATOR - REAR - DESCRIPTION, MODE	24-39
DOOR ACTUATOR - REAR - INSTALLATION, MODE	24-40
DOOR ACTUATOR - REAR - OPERATION, MODE	24-39
DOOR ACTUATOR - REAR - REMOVAL, MODE	24-39
DOOR ACTUATOR - REMOVAL, BLEND	24-22, 24-35
DOOR ACTUATOR - REMOVAL, MODE	24-29
DOOR ACTUATOR - REMOVAL, RECIRCULATION	24-32
DOOR ADJUSTMENT, STANDARD PROCEDURE - POWER SLIDING	8N-49
DOOR ADJUSTMENTS, ADJUSTMENTS - SLIDING	23-30
DOOR BLOCKER LATCH - INSTALLATION, FUEL FILL	23-53
DOOR BLOCKER LATCH - REMOVAL, FUEL FILL	23-53
DOOR BLOCKER LATCH STRIKER - INSTALLATION, FUEL FILL	23-53
DOOR BLOCKER LATCH STRIKER - REMOVAL, FUEL FILL	23-53
DOOR BLOCKER LOCKOUT LINK - INSTALLATION, FUEL FILL	23-54
DOOR BLOCKER LOCKOUT LINK - REMOVAL, FUEL FILL	23-54
DOOR CONTROL MODULE - DESCRIPTION, SLIDING	8E-18
DOOR CONTROL MODULE - OPERATION, SLIDING	8E-18
DOOR CONTROL MODULE, DIAGNOSIS AND TESTING - SLIDING	8E-18
DOOR CYLINDER LOCK SWITCH - EXPORT - DESCRIPTION	8N-22
DOOR CYLINDER LOCK SWITCH - EXPORT - OPERATION	8N-22
DOOR CYLINDER LOCK SWITCH, EXPORT	8N-22
DOOR GLASS - INSTALLATION	23-17
DOOR GLASS - INSTALLATION, SLIDING	23-163
DOOR GLASS - REMOVAL	23-16
DOOR GLASS - REMOVAL, SLIDING	23-163
DOOR GLASS RUN WEATHERSTRIP - INSTALLATION, FRONT	23-166
DOOR GLASS RUN WEATHERSTRIP - REMOVAL, FRONT	23-166
DOOR INNER BELT MOLDING - INSTALLATION, FRONT	23-168
DOOR INNER BELT MOLDING - REMOVAL, FRONT	23-168
DOOR LEARN CYCLE, STANDARD PROCEDURE - POWER SLIDING	8N-48
DOOR LOCK MOTOR - INSTALLATION, SLIDING	8N-25
DOOR LOCK MOTOR - REMOVAL, SLIDING	8N-25
DOOR LOCK MOTOR, DIAGNOSIS AND TESTING	8N-23
DOOR LOCK SWITCH, DIAGNOSIS AND TESTING	8N-23
DOOR MOTOR - DESCRIPTION, SLIDING	8N-51
DOOR MOTOR - INSTALLATION, SLIDING	8N-51
DOOR MOTOR - OPERATION, SLIDING	8N-51
DOOR MOTOR - REMOVAL, SLIDING	8N-51
DOOR OUTER BELT MOLDING - INSTALLATION, FRONT	23-167
DOOR OUTER BELT MOLDING - REMOVAL, FRONT	23-167
DOOR SILL PLATE - INSTALLATION, SLIDING	23-99
DOOR SILL PLATE - REMOVAL, SLIDING	23-98
DOOR SILL TRIM PLATE - INSTALLATION	23-89
DOOR SILL TRIM PLATE - REMOVAL	23-89
DOOR STOP BUMPER BEZEL - INSTALLATION, SLIDING	23-25
DOOR STOP BUMPER BEZEL - REMOVAL, SLIDING	23-25
DOOR SYSTEM - DESCRIPTION, POWER SLIDING	8N-40
DOOR SYSTEM - OPERATION, POWER SLIDING	8N-41
DOOR SYSTEM, DIAGNOSIS AND TESTING - POWER SLIDING	8N-42
DOOR WEATHERSTRIP - INSTALLATION, FRONT	23-168

Description	Group-Page
DOOR WEATHERSTRIP - INSTALLATION, SLIDING	23-168
DOOR WEATHERSTRIP - REMOVAL, FRONT	23-168
DOOR WEATHERSTRIP - REMOVAL, SLIDING	23-168
DOSING PUMP - DESCRIPTION, FUEL	24-117
DOSING PUMP - INSTALLATION, FUEL	24-117
DOSING PUMP - OPERATION, FUEL	24-117
DOSING PUMP - REMOVAL, FUEL	24-117
DOWNSTREAM 1/2 - 2.4/3.3/3.8L - REMOVAL	14-38
DOWNSTREAM 2/1, 2.4/3.3/3.8L - INSTALLATION	14-39
D-PILLAR TRIM PANEL - INSTALLATION, LEFT	23-94
D-PILLAR TRIM PANEL - INSTALLATION, RIGHT	23-98
D-PILLAR TRIM PANEL - REMOVAL, LEFT	23-94
D-PILLAR TRIM PANEL - REMOVAL, RIGHT	23-97
DRAIN TUBE - INSTALLATION	23-172
DRAIN TUBE - REMOVAL	23-172
DRAINCOCK - INSTALLATION, RADIATOR	7-27
DRAINCOCK - REMOVAL, RADIATOR	7-27
DRAINING - STANDARD PROCEDURE, COOLING SYSTEM	7-4
DRAINING FUEL TANK - STANDARD PROCEDURE	14-2
DRAW TEST, STANDARD PROCEDURE - IGNITION-OFF	8F-13
DRB III® STATE DISPLAY TEST MODE, OPERATION	25-10
DRIER - DESCRIPTION, RECEIVER	24-92
DRIER - INSTALLATION, RECEIVER	24-93
DRIER - OPERATION, RECEIVER	24-92
DRIER - REMOVAL, RECEIVER	24-92
DRIVE - ASSEMBLY, FINAL	21-224,21-78
DRIVE - DESCRIPTION, FINAL	21-219,21-74
DRIVE - DESCRIPTION, FLEX	8N-55
DRIVE - DISASSEMBLY, FINAL	21-220,21-75
DRIVE - INSTALLATION, FLEX	8N-56
DRIVE - OPERATION, FINAL	21-220,21-75
DRIVE - OPERATION, FLEX	8N-55
DRIVE - REMOVAL, FLEX	8N-55
DRIVE BELT - DIAGNOSIS AND TESTING, ACCESSORY	7-7
DRIVE BELT TENSION, SPECIFICATIONS - ACCESSORY	7-5
DRIVE BELTS - 2.4L - ADJUSTMENTS	7-10
DRIVE BELTS - 2.4L - INSTALLATION	7-9
DRIVE BELTS - 2.4L - REMOVAL	7-9
DRIVE BELTS - 3.3/3.8L - INSTALLATION	7-12
DRIVE BELTS - 3.3/3.8L - REMOVAL	7-11
DRIVE BELTS - CLEANING	7-8
DRIVE BELTS - INSPECTION	7-8
DRIVE UNIT - DESCRIPTION, LOWER	8N-53
DRIVE UNIT - INSTALLATION, LOWER	8N-54
DRIVE UNIT - OPERATION, LOWER	8N-53
DRIVE UNIT - REMOVAL, LOWER	8N-53
DRIVE UNIT TRACK & RACK - DESCRIPTION, LOWER	8N-57
DRIVE UNIT TRACK & RACK - INSTALLATION, LOWER	8N-58
DRIVE UNIT TRACK & RACK - OPERATION, LOWER	8N-57
DRIVE UNIT TRACK & RACK - REMOVAL, LOWER	8N-57
DRIVELINE MODULE FLUIDS - DESCRIPTION, AWD REAR	0-6
DRIVER AIRBAG - DESCRIPTION	8O-16
DRIVER AIRBAG - INSTALLATION	8O-18
DRIVER AIRBAG - OPERATION	8O-16
DRIVER AIRBAG - REMOVAL	8O-17
DRIVER HEATED SEAT SWITCH, DIAGNOSIS AND TESTING	8G-9
DRIVER SEAT SWITCH, DIAGNOSIS AND TESTING	8N-34
DRIVING CLUTCHES - DESCRIPTION	21-219, 21-74
DRIVING CLUTCHES - OPERATION	21-219,21-74
DROP - STANDARD PROCEDURE, TESTING FOR A VOLTAGE	8W-01-10
DRUM - INSTALLATION	5-32
DRUM - REMOVAL	5-32
DRUM BRAKE - INSTALLATION, SUPPORT PLATE	5-61
DRUM BRAKE - REMOVAL, SUPPORT PLATE	5-61
DRUM BRAKE AUTOMATIC ADJUSTER - DIAGNOSIS AND TESTING	5-14
DRUM BRAKE SHOE LINING - INSPECTION, REAR	5-22
DRUM BRAKE SHOES - ADJUSTMENT, REAR	5-23
DRUM BRAKE SHOES - INSTALLATION, REAR	5-22
DRUM BRAKE SHOES - REMOVAL, REAR	5-19
DRUM BRAKES (REAR) - DESCRIPTION	5-13
DUAL ZONE, DESCRIPTION - MANUAL	24-2
DUAL ZONE, OPERATION - MANUAL	24-5
DUCT - INSTALLATION, DEFROSTER	24-50
DUCT - INSTALLATION, DISTRIBUTION	24-57
DUCT - INSTALLATION, REAR FLOOR HEAT	24-63
DUCT - REMOVAL, DEFROSTER	24-49
DUCT - REMOVAL, DISTRIBUTION	24-57
DUCT - REMOVAL, REAR FLOOR HEAT	24-63
DUCTS - INSTALLATION, FLOOR DISTRIBUTION	24-50
DUCTS - INSTALLATION, INSTRUMENT PANEL	24-55
DUCTS - INSTALLATION, INSTRUMENT PANEL DEMISTER	24-54
DUCTS - REMOVAL, FLOOR DISTRIBUTION	24-50
DUCTS - REMOVAL, INSTRUMENT PANEL	24-55
DUCTS - REMOVAL, INSTRUMENT PANEL DEMISTER	24-54
DUTY, CARGO - INSTALLATION, AWD, HEAVY	2-36
DUTY, CARGO - REMOVAL, AWD, HEAVY	2-36
DVD PLAYER - DESCRIPTION	8A-12
DVD PLAYER - INSTALLATION	8A-12
DVD PLAYER - REMOVAL	8A-12
ELECTRIC BACKLIGHT (EBL) SYSTEM, DIAGNOSIS AND TESTING	8G-2
ELECTROLYTE LEVEL, STANDARD PROCEDURE - CHECKING BATTERY	8F-14
ELECTRONIC VARIABLE BRAKE PROPORTIONING - DESCRIPTION	5-88
ELECTRONIC VARIABLE BRAKE PROPORTIONING - OPERATION	5-89
ELECTRONIC VEHICLE INFO CENTER - DESCRIPTION	8M-7
ELECTRONIC VEHICLE INFO CENTER - OPERATION	8M-7
ELECTRONIC VEHICLE INFORMATION CENTER, DIAGNOSIS AND TESTING	8M-8
ELECTRONIC VEHICLE INFORMATION CENTER PROGRAMMING, STANDARD PROCEDURE	8M-8
ELECTROSTATIC DISCHARGE (ESD) SENSITIVE DEVICES - STANDARD PROCEDURE	8W-01-8
ELEMENT - INSTALLATION, AIR CLEANER	9-101,9-24
ELEMENT - REMOVAL, AIR CLEANER	9-101,9-24
ELEMENTS - DESCRIPTION, HEATED SEAT	8G-11
ELEMENTS - OPERATION, HEATED SEAT	8G-11
ELEMENTS, DIAGNOSIS AND TESTING - HEATED SEAT	8G-11
EMISSION CONTROL INFORMATION LABEL, DESCRIPTION - VEHICLE	25-1
END CAP - INSTALLATION, INSTRUMENT PANEL RIGHT	23-72
END CAP - REMOVAL, INSTRUMENT PANEL RIGHT	23-72
END CLEANING AND LUBRICATION - STANDARD PROCEDURE, CABLE	5-65
END PLAY - STANDARD PROCEDURE, CRANKSHAFT	9-37
END PLAY - STANDARD PROCEDURE, MEASURING CAMSHAFT	9-29
END PLAY - STANDARD PROCEDURE, MEASURING CRANKSHAFT	9-128
ENGAGE ACTUATOR - DESCRIPTION	8N-9
ENGAGE ACTUATOR - INSTALLATION	8N-10
ENGAGE ACTUATOR - OPERATION	8N-9
ENGAGE ACTUATOR - REMOVAL	8N-9
ENGINE - A/C COMPRESSOR MOUNTING BRACKET, 2.4L	24-74,24-75
ENGINE - CLEANING	7-18
ENGINE - DESCRIPTION, 2.4L/3.3L/3.8L	19-52
ENGINE - DESCRIPTION, FUEL REQUIREMENTS - DIESEL	0-6
ENGINE - INSPECTION	7-18
ENGINE - INSTALLATION, 2.4L	19-47,19-50, 19-51,19-53
ENGINE - INSTALLATION, 3.3L/3.8L	19-48,19-50, 19-52,19-53
ENGINE - REMOVAL, 2.4L	19-46,19-49,19-51, 19-52
ENGINE - REMOVAL, 3.3L/3.8L	19-46,19-49, 19-51,19-52
ENGINE - SPECIFICATIONS, 2.4L	9-16
ENGINE 2.4L - DESCRIPTION	9-3
ENGINE 3.3/3.8L - DESCRIPTION	9-78
ENGINE ASSEMBLY - INSTALLATION	9-14,9-91
ENGINE ASSEMBLY - REMOVAL	9-12,9-88
ENGINE BLOCK - CLEANING	9-115,9-37
ENGINE BLOCK - DESCRIPTION	9-115,9-36
ENGINE BLOCK - INSPECTION	9-115,9-37
ENGINE BLOCK HEATER - DESCRIPTION	7-20
ENGINE BLOCK HEATER - INSTALLATION	7-21
ENGINE BLOCK HEATER - OPERATION	7-20
ENGINE BLOCK HEATER - REMOVAL	7-21
ENGINE BLOCK HEATER TESTING - DIAGNOSIS AND TESTING	7-21
ENGINE COOLANT - DESCRIPTION	7-19
ENGINE COOLANT - DESCRIPTION	0-3
ENGINE COOLANT TEMPERATURE SENSOR - 2.4L - DESCRIPTION	7-21
ENGINE COOLANT TEMPERATURE SENSOR - 2.4L - INSTALLATION	7-21
ENGINE COOLANT TEMPERATURE SENSOR - 2.4L - REMOVAL	7-21
ENGINE COOLANT TEMPERATURE SENSOR - 3.3/3.8L - DESCRIPTION	7-21
ENGINE COOLANT TEMPERATURE SENSOR - 3.3/3.8L - INSTALLATION	7-23
ENGINE COOLANT TEMPERATURE SENSOR - 3.3/3.8L - REMOVAL	7-21
ENGINE COOLANT THERMOSTAT - 2.4L - INSTALLATION	7-24
ENGINE COOLANT THERMOSTAT - 2.4L - REMOVAL	7-24
ENGINE COOLANT THERMOSTAT - 3.3/3.8L - INSTALLATION	7-25
ENGINE COOLANT THERMOSTAT - 3.3/3.8L - REMOVAL	7-24
ENGINE COOLANT THERMOSTAT - DESCRIPTION	7-23
ENGINE COOLANT THERMOSTAT - DIAGNOSIS AND TESTING	7-23
ENGINE COOLANT THERMOSTAT - OPERATION	7-23
ENGINE COOLING SYSTEM - DIAGNOSIS AND TESTING	7-14
ENGINE COOLING SYSTEM REQUIREMENTS, DESCRIPTION	24-1
ENGINE COOLING SYSTEM, WARNING	24-65
ENGINE CORE AND OIL GALLERY PLUGS - STANDARD PROCEDURE	9-10,9-88
ENGINE DIAGNOSIS - INTRODUCTION - DIAGNOSIS AND TESTING	9-3,9-78
ENGINE DIAGNOSIS - MECHANICAL - DIAGNOSIS AND TESTING	9-6,9-82
ENGINE DIAGNOSIS - PERFORMANCE - DIAGNOSIS AND TESTING	9-4,9-80
ENGINE GASKET SURFACE PREPARATION - STANDARD PROCEDURE	9-11,9-87
ENGINE MOUNTING - DESCRIPTION	9-134,9-50
ENGINE OIL - DESCRIPTION, FLEXIBLE FUEL	0-3
ENGINE OIL - DIESEL ENGINES - DESCRIPTION	0-6
ENGINE OIL AND FILTER CHANGE - STANDARD PROCEDURE	9-139,9-54
ENGINE OIL AND LUBRICANTS - DESCRIPTION	0-1
ENGINE OIL LEAK INSPECTION - DIAGNOSIS AND TESTING	9-8,9-84
ENGINE OIL LEVEL CHECK - STANDARD PROCEDURE	9-140
ENGINE OIL LEVEL CHECK, STANDARD PROCEDURE	9-54
ENGINE OIL PRESSURE - DIAGNOSIS AND TESTING	9-138

Description	Group-Page
ENGINE OIL PRESSURE - DIAGNOSIS AND TESTING, CHECKING	9-53
ENGINE, SPECIAL TOOLS - 2.4L	9-21
ENGINE, SPECIAL TOOLS - 3.3/3.8L	9-98
ENGINE, SPECIFICATIONS - 3.3/3.8L	9-93
ENGINE SPEED SENSOR - DESCRIPTION	14-30
ENGINE SPEED SENSOR - OPERATION	14-30
ENGINE, STANDARD PROCEDURE - HYDROSTATIC LOCKED	9-10,9-87
ENGINES - DESCRIPTION, ENGINE OIL - DIESEL	0-6
ENGINES - EXPORT - DESCRIPTION, DIESEL	0-21
ENGINES, INSTALLATION - 2.4L/3.3L/ 3.8L	24-77
ENGINES, INSTALLATION - 2.5L/2.8L DIESEL	24-78
ENGINES, REMOVAL - 2.4L/3.3L/3.8L	24-76
ENGINES, REMOVAL - 2.5L/2.8L DIESEL	24-77
ENTRY MODULE - DESCRIPTION, SENTRY KEY REMOTE	8Q-3
ENTRY MODULE - DIAGNOSIS AND TESTING, SENTRY KEY REMOTE	8Q-5
ENTRY MODULE - INSTALLATION, SENTRY KEY REMOTE	8Q-6
ENTRY MODULE - OPERATION, SENTRY KEY REMOTE	8Q-4
ENTRY MODULE - REMOVAL, SENTRY KEY REMOTE	8Q-6
ENTRY SYSTEM - DIAGNOSIS AND TESTING, SENTRY KEY REMOTE	8Q-3
ENTRY TRANSMITTER, DIAGNOSIS AND TESTING - KEYLESS	8N-24
ENTRY TRANSMITTER PROGRAMMING - STANDARD PROCEDURE, REMOTE KEYLESS	8N-24
EQUIPMENT, STANDARD PROCEDURE - REFRIGERANT SYSTEM SERVICE	24-69
ERASING TRANSMITTER CODES, STANDARD PROCEDURE	8M-12
EVACUATE, STANDARD PROCEDURE - REFRIGERANT SYSTEM	24-70
EVAP CANISTER - INSTALLATION, REAR	25-21
EVAP CANISTER - REMOVAL, REAR	25-20
EVAPORATION CONTROL SYSTEM - OPERATION	25-11
EVAPORATOR - DESCRIPTION, A/C	24-80,24-98
EVAPORATOR - INSTALLATION, A/C	24-81
EVAPORATOR - OPERATION, A/C	24-80,24-98
EVAPORATOR - REMOVAL, A/C	24-81
EVAPORATOR, INSTALLATION - REAR A/C	24-100
EVAPORATOR LINE EXTENSION, INSTALLATION - REAR A/C	24-100
EVAPORATOR LINE EXTENSION, REMOVAL - REAR A/C	24-99
EVAPORATOR, REMOVAL - REAR A/C	24-98
EVAPORATOR TEMPERATURE SENSOR - DESCRIPTION	24-26
EVAPORATOR TEMPERATURE SENSOR - OPERATION	24-27
EVAP/PURGE SOLENOID - DESCRIPTION	25-13
EVAP/PURGE SOLENOID - INSTALLATION	25-13
EVAP/PURGE SOLENOID - OPERATION	25-13
EVAP/PURGE SOLENOID - REMOVAL	25-13
EXCESSIVE EXHAUST SYSTEM NOISE - DIAGNOSIS AND TESTING	11-2
EXHAUST MANIFOLD - CLEANING	9-63
EXHAUST MANIFOLD - INSPECTION	9-63
EXHAUST MANIFOLD - INSTALLATION	9-63
EXHAUST MANIFOLD - LEFT - CLEANING	9-154
EXHAUST MANIFOLD - LEFT - INSPECTION	9-155
EXHAUST MANIFOLD - LEFT - INSTALLATION	9-155
EXHAUST MANIFOLD - LEFT - REMOVAL	9-154
EXHAUST MANIFOLD - REMOVAL	9-63
EXHAUST MANIFOLD - RIGHT - CLEANING	9-153
EXHAUST MANIFOLD - RIGHT - INSPECTION	9-153
EXHAUST MANIFOLD - RIGHT - INSTALLATION	9-153
EXHAUST MANIFOLD - RIGHT - REMOVAL	9-152
EXHAUST SYSTEM - DESCRIPTION	11-1
EXHAUST SYSTEM NOISE - DIAGNOSIS AND TESTING, EXCESSIVE	11-2
EXHAUST SYSTEM RESTRICTION CHECK - DIAGNOSIS AND TESTING	11-2
EXHAUST SYSTEM, SPECIAL TOOLS	11-4
EXHAUST TUBE - INSTALLATION	24-116
EXHAUST TUBE - REMOVAL	24-116
EXHAUSTER - DESCRIPTION, REAR QUARTER PANEL/FENDER AIR	23-59
EXHAUSTER - INSTALLATION, REAR QUARTER PANEL/FENDER AIR	23-60
EXHAUSTER - REMOVAL, REAR QUARTER PANEL/FENDER AIR	23-59
EXPANSION VALVE - DESCRIPTION	24-81
EXPANSION VALVE - DESCRIPTION, A/C	24-100
EXPANSION VALVE - OPERATION	24-81
EXPANSION VALVE - OPERATION, A/C	24-100
EXPANSION VALVE, DIAGNOSIS AND TESTING - FRONT A/C	24-82
EXPANSION VALVE, DIAGNOSIS AND TESTING - REAR A/C	24-101
EXPORT - ANTENNA MODULE	8A-10
EXPORT - BRAKE ROTOR	5-60
EXPORT - DESCRIPTION	5-63
EXPORT - DESCRIPTION	0-13
EXPORT - DESCRIPTION	2-10
EXPORT - DESCRIPTION, ANTENNA MODULE	8A-10
EXPORT - DESCRIPTION, DIESEL ENGINES	0-21
EXPORT - DESCRIPTION, DOOR CYLINDER LOCK SWITCH	8N-22
EXPORT - DESCRIPTION, POWER FOLDAWAY MIRROR SWITCH	8N-29
EXPORT - DESCRIPTION, QUARTER GLASS INTEGRAL ANTENNA	8A-13
EXPORT - DOOR CYLINDER LOCK SWITCH	8N-22
EXPORT - INSTALLATION	5-68
EXPORT - INSTALLATION	2-11
EXPORT - INSTALLATION, HEADLAMP UNIT	8L-17
EXPORT - INSTALLATION, HOOD AJAR SWITCH	8Q-3
EXPORT - INSTALLATION, POWER FOLDAWAY MIRROR SWITCH	8N-30
EXPORT - OPERATION, ANTENNA MODULE	8A-10
EXPORT - OPERATION, DOOR CYLINDER LOCK SWITCH	8N-22
EXPORT - OPERATION, POWER FOLDAWAY MIRROR SWITCH	8N-29
EXPORT - OPERATION, QUARTER GLASS INTEGRAL ANTENNA	8A-13
EXPORT - QUARTER GLASS INTEGRAL ANTENNA	8A-13
EXPORT - REMOVAL	5-67
EXPORT - REMOVAL	2-11
EXPORT - REMOVAL, HEADLAMP UNIT	8L-17
EXPORT - REMOVAL, HOOD AJAR SWITCH	8Q-3
EXPORT - REMOVAL, POWER FOLDAWAY MIRROR SWITCH	8N-29
EXPORT - STANDARD PROCEDURE, FRONT FOG LAMP UNIT ALIGNMENT	8L-9
EXPORT - STANDARD PROCEDURE, HEADLAMP UNIT ALIGNMENT	8L-15
EXTENSION, INSTALLATION - REAR A/C EVAPORATOR LINE	24-100
EXTENSION, REMOVAL - REAR A/C EVAPORATOR LINE	24-99
EXTENSION TRIM - INSTALLATION, A-PILLAR LOWER	23-79
EXTENSION TRIM - REMOVAL, A-PILLAR LOWER	23-79
EXTERIOR - DESCRIPTION, LAMPS/ LIGHTING	8L-2
EXTERIOR - OPERATION, LAMPS/ LIGHTING	8L-2
EXTERIOR - WARNING, LAMPS/ LIGHTING	8L-3
EXTERIOR HANDLE - INSTALLATION	23-22, 23-40
EXTERIOR HANDLE - REMOVAL	23-21,23-40
EXTERIOR HANDLE SWITCH - DESCRIPTION	8N-10
EXTERIOR HANDLE SWITCH - INSTALLATION	8N-10
EXTERIOR HANDLE SWITCH - OPERATION	8N-10
EXTERIOR HANDLE SWITCH - REMOVAL	8N-10
EXTERIOR LAMPS, SPECIFICATIONS	8L-3
EXTERIOR NAME PLATES - ADHESIVE ATTACHED - INSTALLATION	23-51
EXTERIOR NAME PLATES - ADHESIVE ATTACHED - REMOVAL	23-51
EXTERIOR NAME PLATES - TAPE ATTACHED - INSTALLATION	23-51
EXTERIOR NAME PLATES - TAPE ATTACHED - REMOVAL	23-51
FACTOR SETTING - STANDARD PROCEDURE, PINION	8E-15
FAILED PARK SWITCH - DIAGNOSIS AND TESTING	8R-2
FAN - DESCRIPTION, RADIATOR	7-29
FAN - INSTALLATION, RADIATOR	7-30
FAN - OPERATION, RADIATOR	7-29
FAN - REMOVAL, RADIATOR	7-30
FAN MOTOR - DIAGNOSIS AND TESTING, RADIATOR	7-30
FAN RELAY - DESCRIPTION, RADIATOR	7-31
FAN RELAY - INSTALLATION, RADIATOR	7-31
FAN RELAY - OPERATION, RADIATOR	7-31
FAN RELAY - REMOVAL, RADIATOR	7-31
FASCIA - INSTALLATION, FRONT	13-1
FASCIA - INSTALLATION, REAR	13-4
FASCIA - REMOVAL, FRONT	13-1
FASCIA - REMOVAL, REAR	13-4
FASCIA - SCUFF PAD - INSTALLATION, REAR	13-5
FASCIA - SCUFF PAD - REMOVAL, REAR	13-5
FASTENER TORQUE, SPECIFICATIONS - ABS	5-91
FASTENER TORQUE, SPECIFICATIONS - BRAKE	5-9
FASTENER TORQUE, SPECIFICATIONS - COLUMN	19-17
FASTENER TORQUE, SPECIFICATIONS - FRONT SUSPENSION	2-3
FASTENER TORQUE, SPECIFICATIONS - POWER STEERING	19-9
FASTENER TORQUE, SPECIFICATIONS - REAR SUSPENSION	2-28
FEED CIRCUIT RESISTANCE TEST - DIAGNOSIS AND TESTING	8F-35
FEED CIRCUIT TEST - DIAGNOSIS AND TESTING	8F-36
FENDER - INSTALLATION, FRONT	23-52
FENDER - REMOVAL, FRONT	23-51
FFV REPLACEMENT PARTS - DESCRIPTION	14-2
FILL - DIAGNOSIS AND TESTING, VEHICLE DOES NOT	25-17
FILL DOOR - INSTALLATION, FUEL	23-52
FILL DOOR - REMOVAL, FUEL	23-52
FILL DOOR BLOCKER LATCH - INSTALLATION, FUEL	23-53
FILL DOOR BLOCKER LATCH - REMOVAL, FUEL	23-53
FILL DOOR BLOCKER LATCH STRIKER - INSTALLATION, FUEL	23-53
FILL DOOR BLOCKER LATCH STRIKER - REMOVAL, FUEL	23-53
FILL DOOR BLOCKER LOCKOUT LINK - INSTALLATION, FUEL	23-54
FILL DOOR BLOCKER LOCKOUT LINK - REMOVAL, FUEL	23-54
FILL/CHECK LOCATIONS - DESCRIPTION, FLUID	0-7
FILLER CAP - DESCRIPTION, FUEL	25-13
FILLER CAP - OPERATION, FUEL	25-13
FILLER NECK SEAL - DIAGNOSIS AND TESTING, RADIATOR CAP TO	7-28
FILLER TUBE - INSTALLATION, FUEL TANK	14-17
FILLER TUBE - REMOVAL, FUEL TANK	14-16
FILLING - STANDARD PROCEDURE, COOLING SYSTEM	7-4
FILLING, STANDARD PROCEDURE - REAR HEATER CORE	24-102
FILTER - DESCRIPTION, AIR	24-42
FILTER - DESCRIPTION, OIL	9-54
FILTER - INSTALLATION, AIR	24-43
FILTER - INSTALLATION, INLET	14-17
FILTER - INSTALLATION, OIL	9-141,9-54
FILTER - REMOVAL, AIR	24-42
FILTER - REMOVAL, INLET	14-17
FILTER - REMOVAL, OIL	9-141,9-54

Description	Group-Page
FILTER ADAPTER - INSTALLATION, OIL	9-142
FILTER ADAPTER - REMOVAL, OIL	9-142
FILTER CHANGE - STANDARD PROCEDURE, ENGINE OIL	9-139,9-54
FILTER SERVICE - STANDARD PROCEDURE, FLUID	21-231,21-82
FINAL DRIVE - ASSEMBLY	21-224,21-78
FINAL DRIVE - DESCRIPTION	21-219,21-74
FINAL DRIVE - DISASSEMBLY	21-220,21-75
FINAL DRIVE - OPERATION	21-220,21-75
FINESSE SANDING/BUFFING & POLISHING - DESCRIPTION	23-101
FINISH - DESCRIPTION, BASE COAT/CLEARCOAT	23-101
FIRING ORDER, SPECIFICATIONS	8I-3
FIRST ROW - BENCH - INSTALLATION, SEAT BELT BUCKLE	8O-37
FIRST ROW - BENCH - REMOVAL, SEAT BELT BUCKLE	8O-36
FIRST ROW - OUTBOARD - INSTALLATION, SEAT BELT & RETRACTOR	8O-40
FIRST ROW - OUTBOARD - REMOVAL, SEAT BELT & RETRACTOR	8O-39
FIRST ROW INBOARD - QUAD BUCKET - INSTALLATION, SEAT BELT BUCKLE	8O-36
FIRST ROW INBOARD - QUAD BUCKET - REMOVAL, SEAT BELT BUCKLE	8O-35
FITTING - CONNECTING ROD	9-46
FITTING - PISTON RING	9-47
FITTING - STANDARD PROCEDURE, MAIN BEARING	9-125
FITTING - STANDARD PROCEDURE, PISTON RING	9-124
FITTING - STANDARD PROCEDURE, PISTON TO CYLINDER BORE	9-44
FITTING CONNECTING RODS - STANDARD PROCEDURE	9-119
FITTING DISASSEMBLY/ASSEMBLY - STANDARD PROCEDURE, TRANSMISSION COOLER LINE QUICK CONNECT	7-38
FITTING PISTONS - STANDARD PROCEDURE	9-120
FITTINGS - STANDARD PROCEDURE, QUICK-CONNECT	14-18
FITTINGS, STANDARD PROCEDURE - HANDLING TUBING	24-69
FLAP AND SPRING ASSEMBLY - INSTALLATION, QUAD BUCKET SEAT SIDE SHIELD/CUP HOLDER	23-151
FLAP AND SPRING ASSEMBLY - REMOVAL, QUAD BUCKET SEAT SIDE SHIELD/CUP HOLDER	23-151
FLEX DRIVE - DESCRIPTION	8N-55
FLEX DRIVE - INSTALLATION	8N-56
FLEX DRIVE - OPERATION	8N-55
FLEX DRIVE - REMOVAL	8N-55
FLEX PLATE - INSTALLATION	9-133
FLEX PLATE - REMOVAL	9-133
FLEXIBLE FUEL ENGINE OIL - DESCRIPTION	0-3
FLOOR CONSOLE - FOLD-IN-FLOOR - INSTALLATION	23-89
FLOOR CONSOLE - FOLD-IN-FLOOR - REMOVAL	23-89
FLOOR CONSOLE BASE TRAY - INSTALLATION	23-89
FLOOR CONSOLE BASE TRAY - REMOVAL	23-89
FLOOR CONSOLE KEY LOCK TUMBLER - FOLD-IN-FLOOR - INSTALLATION	23-90
FLOOR CONSOLE KEY LOCK TUMBLER - FOLD-IN-FLOOR - REMOVAL	23-90
FLOOR CONSOLE LID LATCH - FOLD-IN-FLOOR - INSTALLATION	23-90
FLOOR CONSOLE LID LATCH - FOLD-IN-FLOOR - REMOVAL	23-90
FLOOR DISTRIBUTION DUCTS - INSTALLATION	24-50
FLOOR DISTRIBUTION DUCTS - REMOVAL	24-50
FLOOR HEAT DUCT - INSTALLATION, REAR	24-63
FLOOR HEAT DUCT - REMOVAL, REAR	24-63
FLOOR MATS - INSTALLATION, CARPETS	23-81
FLOOR MATS - REMOVAL, CARPETS	23-81
FLOOR TUB CARPET INSERT - FOLD-IN-FLOOR - INSTALLATION, SECOND ROW	23-98
FLOOR TUB CARPET INSERT - FOLD-IN-FLOOR - REMOVAL, SECOND ROW	23-98
FLOOR TUB CARPETS INSERT - FOLD-IN-FLOOR - INSTALLATION, REAR	23-96
FLOOR TUB CARPETS INSERT - FOLD-IN-FLOOR - REMOVAL, REAR	23-95
FLOW AND PRESSURE TEST - DIAGNOSIS AND TESTING, POWER STEERING SYSTEM	19-1
FLOW CHECK - DIAGNOSIS AND TESTING, COOLING SYSTEM	7-3
FLUID - DESCRIPTION, AUTOMATIC/ MANUAL TRANSAXLE	0-4
FLUID - DESCRIPTION, AWD POWER TRANSFER UNIT	0-6
FLUID AND FILTER SERVICE - STANDARD PROCEDURE	21-231,21-82
FLUID CAPACITIES - SPECIFICATIONS	0-6
FLUID CONTAMINATION - DIAGNOSIS AND TESTING, BRAKE	5-33
FLUID COOLER - DESCRIPTION	19-45
FLUID COOLER - INSTALLATION	19-45
FLUID COOLER - OPERATION	19-45
FLUID COOLER - REMOVAL	19-45
FLUID FILL/CHECK LOCATIONS - DESCRIPTION	0-7
FLUID LEAKAGE - DIAGNOSIS AND TESTING, TORQUE CONVERTER HOUSING	21-154,21-9
FLUID LEVEL AND CONDITION CHECK, STANDARD PROCEDURE	21-230,21-82
FLUID LEVEL CHECKING - STANDARD PROCEDURE, BRAKE	5-33
FLUID LEVEL CHECKING - STANDARD PROCEDURE, POWER STEERING	19-44
FLUID LEVEL SWITCH - DESCRIPTION, BRAKE	5-10
FLUID LEVEL SWITCH - INSTALLATION, BRAKE	5-11
FLUID LEVEL SWITCH - INSTALLATION, WASHER	8R-11
FLUID LEVEL SWITCH - OPERATION, BRAKE	5-10
FLUID LEVEL SWITCH - REMOVAL, BRAKE	5-11
FLUID LEVEL SWITCH - REMOVAL, WASHER	8R-11
FLUID, SPECIFICATIONS - BRAKE	5-33
FLUIDS - DESCRIPTION, AWD REAR DRIVELINE MODULE	0-6
FLUSH MEASUREMENTS - SPECIFICATIONS, GAP	23-177
FOG LAMP - DIAGNOSIS AND TESTING, FRONT	8L-7
FOG LAMP - INSTALLATION, FRONT	8L-8
FOG LAMP - REMOVAL, FRONT	8L-8
FOG LAMP UNIT ALIGNMENT - EXPORT - STANDARD PROCEDURE, FRONT	8L-9
FOG LAMP UNIT ALIGNMENT - STANDARD PROCEDURE, FRONT	8L-9
FOLDAWAY MIRROR SWITCH - EXPORT - DESCRIPTION, POWER	8N-29
FOLDAWAY MIRROR SWITCH - EXPORT - INSTALLATION, POWER	8N-30
FOLDAWAY MIRROR SWITCH - EXPORT - OPERATION, POWER	8N-29
FOLDAWAY MIRROR SWITCH - EXPORT - REMOVAL, POWER	8N-29
FOLD-IN-FLOOR - INSTALLATION	14-10,14-16
FOLD-IN-FLOOR - INSTALLATION, ARMREST - SECOND ROW	23-130
FOLD-IN-FLOOR - INSTALLATION, ARMREST ROTATING ASSEMBLY - SECOND ROW	23-130
FOLD-IN-FLOOR - INSTALLATION, BOTTOM OF SEAT CUSHION PAN PANEL-THIRD ROW	23-152
FOLD-IN-FLOOR - INSTALLATION, CARPET TRIM RING AND COVER	23-84
FOLD-IN-FLOOR - INSTALLATION, CARPETS	23-83
FOLD-IN-FLOOR - INSTALLATION, FLOOR CONSOLE	23-89
FOLD-IN-FLOOR - INSTALLATION, FLOOR CONSOLE KEY LOCK TUMBLER	23-90
FOLD-IN-FLOOR - INSTALLATION, FLOOR CONSOLE LID LATCH	23-90
FOLD-IN-FLOOR - INSTALLATION, HEADREST SLEEVE - SECOND ROW	23-131
FOLD-IN-FLOOR - INSTALLATION, HEADREST SLEEVE - THIRD ROW	23-153
FOLD-IN-FLOOR - INSTALLATION, REAR FLOOR TUB CARPETS INSERT	23-96
FOLD-IN-FLOOR - INSTALLATION, SEAT - SECOND ROW	23-132
FOLD-IN-FLOOR - INSTALLATION, SEAT - THIRD ROW	23-154
FOLD-IN-FLOOR - INSTALLATION, SEAT BACK COVER/FOAM - SECOND ROW	23-133
FOLD-IN-FLOOR - INSTALLATION, SEAT BACK COVER/FOAM - THIRD ROW	23-156
FOLD-IN-FLOOR - INSTALLATION, SEAT BACK FRAME - SECOND ROW	23-134
FOLD-IN-FLOOR - INSTALLATION, SEAT BACK FRAME - THIRD ROW	23-157
FOLD-IN-FLOOR - INSTALLATION, SEAT BACKSTOW STRAP - THIRD ROW	23-158
FOLD-IN-FLOOR - INSTALLATION, SEAT BASE RISER - SECOND ROW	23-135
FOLD-IN-FLOOR - INSTALLATION, SEAT BELT CENTER LAP BELT	23-157
FOLD-IN-FLOOR - INSTALLATION, SEAT CUSHION COVER/FOAM - THIRD ROW	23-159
FOLD-IN-FLOOR - INSTALLATION, SEAT CUSHION COVER/FOAM -SECOND ROW	23-136
FOLD-IN-FLOOR - INSTALLATION, SEAT CUSHION SIDE SHIELD - SECOND ROW	23-138
FOLD-IN-FLOOR - INSTALLATION, SEAT GAS STRUT - SECOND ROW	23-139
FOLD-IN-FLOOR - INSTALLATION, SEAT PROP ROD - SECOND ROW	23-140
FOLD-IN-FLOOR - INSTALLATION, SECOND ROW FLOOR TUB CARPET INSERT	23-98
FOLD-IN-FLOOR - INSTALLATION, SIDE SHIELD CUP HOLDER	23-160
FOLD-IN-FLOOR - INSTALLATION, WITH NVLD	25-20
FOLD-IN-FLOOR - REMOVAL	14-10,14-13
FOLD-IN-FLOOR - REMOVAL, ARMREST - SECOND ROW	23-130
FOLD-IN-FLOOR - REMOVAL, ARMREST ROTATING ASSEMBLY - SECOND ROW	23-130
FOLD-IN-FLOOR - REMOVAL, BOTTOM OF SEAT CUSHION PAN PANEL-THIRD ROW	23-152
FOLD-IN-FLOOR - REMOVAL, CARPET TRIM RING AND COVER	23-84
FOLD-IN-FLOOR - REMOVAL, CARPETS	23-82
FOLD-IN-FLOOR - REMOVAL, FLOOR CONSOLE	23-89
FOLD-IN-FLOOR - REMOVAL, FLOOR CONSOLE KEY LOCK TUMBLER	23-90
FOLD-IN-FLOOR - REMOVAL, FLOOR CONSOLE LID LATCH	23-90
FOLD-IN-FLOOR - REMOVAL, HEADREST SLEEVE - SECOND ROW	23-131
FOLD-IN-FLOOR - REMOVAL, HEADREST SLEEVE - THIRD ROW	23-152
FOLD-IN-FLOOR - REMOVAL, REAR FLOOR TUB CARPETS INSERT	23-95
FOLD-IN-FLOOR - REMOVAL, SEAT - SECOND ROW	23-132
FOLD-IN-FLOOR - REMOVAL, SEAT - THIRD ROW	23-153
FOLD-IN-FLOOR - REMOVAL, SEAT BACK COVER/FOAM - SECOND ROW	23-133
FOLD-IN-FLOOR - REMOVAL, SEAT BACK COVER/FOAM - THIRD ROW	23-155
FOLD-IN-FLOOR - REMOVAL, SEAT BACK FRAME - SECOND ROW	23-134
FOLD-IN-FLOOR - REMOVAL, SEAT BACK FRAME - THIRD ROW	23-156
FOLD-IN-FLOOR - REMOVAL, SEAT BACKSTOW STRAP - THIRD ROW	23-158
FOLD-IN-FLOOR - REMOVAL, SEAT BASE RISER - SECOND ROW	23-134
FOLD-IN-FLOOR - REMOVAL, SEAT BELT CENTER LAP BELT	23-157

Description	Group-Page
FOLD-IN-FLOOR - REMOVAL, SEAT CUSHION COVER/FOAM - THIRD ROW	23-159
FOLD-IN-FLOOR - REMOVAL, SEAT CUSHION COVER/FOAM -SECOND ROW	23-136
FOLD-IN-FLOOR - REMOVAL, SEAT CUSHION SIDE SHIELD - SECOND ROW	23-138
FOLD-IN-FLOOR - REMOVAL, SEAT GAS STRUT - SECOND ROW	23-138
FOLD-IN-FLOOR - REMOVAL, SEAT PROP ROD - SECOND ROW	23-139
FOLD-IN-FLOOR - REMOVAL, SECOND ROW FLOOR TUB CARPET INSERT	23-98
FOLD-IN-FLOOR - REMOVAL, SIDE SHIELD CUP HOLDER	23-160
FOLD-IN-FLOOR - REMOVAL, WITH NVLD	25-20
FOLD-IN-FLOOR - SPECIFICATIONS, WELD LOCATIONS	23-350
FOLD-IN-FLOOR ONLY - SPECIFICATIONS, BODY SEALING LOCATIONS	23-209
FOLD-IN-FLOOR ONLY - SPECIFICATIONS, STRUCTURAL ADHESIVE LOCATIONS	23-228
FOLD-IN-FLOOR SEATING - INSTALLATION	5-68,5-75
FOLD-IN-FLOOR SEATING - INSTALLATION, FWD	2-45
FOLD-IN-FLOOR SEATING - REMOVAL	5-66,5-72
FOLD-IN-FLOOR SEATING - REMOVAL, FWD	2-45
FOLD-IN-FLOOR SEATS ONLY - SPECIFICATIONS, FRAME DIMENSIONS	13-11
FOLDING MECHANISM -SECOND ROW -FOLD-IN-FLOOR - INSTALLATION, SEAT RECLINER/FORWARD	23-137
FOLDING MECHANISM -SECOND ROW -FOLD-IN-FLOOR - REMOVAL, SEAT RECLINER/FORWARD	23-137
FORM-IN-PLACE GASKETS AND SEALERS, STANDARD PROCEDURE	9-11,9-86
FORWARD MECHANISM -THIRD ROW -FOLD-IN-FLOOR - INSTALLATION, SEAT RECLINER/FOLD	23-160
FORWARD MECHANISM -THIRD ROW -FOLD-IN-FLOOR - REMOVAL, SEAT RECLINER/FOLD	23-160
FRAME - SECOND ROW - FOLD-IN-FLOOR - INSTALLATION, SEAT BACK	23-134
FRAME - SECOND ROW - FOLD-IN-FLOOR - REMOVAL, SEAT BACK	23-134
FRAME - THIRD ROW - FOLD-IN-FLOOR - INSTALLATION, SEAT BACK	23-157
FRAME - THIRD ROW - FOLD-IN-FLOOR - REMOVAL, SEAT BACK	23-156
FRAME DIMENSIONS - FOLD-IN-FLOOR SEATS ONLY - SPECIFICATIONS	13-11
FRAME DIMENSIONS - SPECIFICATIONS	13-6
FREE MODULE - INSTALLATION, HANDS	8T-3
FREE MODULE - REMOVAL, HANDS	8T-3
FRONT - DESCRIPTION, HALF SHAFT	3-1
FRONT - DESCRIPTION, PLUMBING	24-65
FRONT - INSTALLATION, BUSHING - LEAF SPRING	2-30
FRONT - INSTALLATION, CRANKSHAFT OIL SEAL	9-130,9-42
FRONT - INSTALLATION, HALF SHAFT	3-4
FRONT - INSTALLATION, SEAT BELT & RETRACTOR - OUTBOARD	8O-39
FRONT - INSTALLATION, SPRING MOUNTS	2-43
FRONT - INSTALLATION, WHEEL MOUNTING STUDS	22-21
FRONT - OPERATION, PLUMBING	24-65
FRONT - REMOVAL, BUSHING - LEAF SPRING	2-29
FRONT - REMOVAL, CRANKSHAFT OIL SEAL	9-130,9-41
FRONT - REMOVAL, HALF SHAFT	3-2
FRONT - REMOVAL, SEAT BELT & RETRACTOR - OUTBOARD	8O-38
FRONT - REMOVAL, SPRING MOUNTS	2-42
FRONT - REMOVAL, WHEEL MOUNTING STUDS	22-21
FRONT - SPECIFICATIONS, HALF SHAFT	3-6
FRONT A/C EXPANSION VALVE, DIAGNOSIS AND TESTING	24-82
FRONT BLOWER MOTOR, DIAGNOSIS AND TESTING	24-46
FRONT BLOWER MOTOR RESISTOR BLOCK, DIAGNOSIS AND TESTING	24-25
FRONT BRAKE ROTOR - INSTALLATION	5-59
FRONT BRAKE ROTOR - REMOVAL	5-59
FRONT BUMPER REINFORCEMENT - INSTALLATION	13-3
FRONT BUMPER REINFORCEMENT - REMOVAL	13-3
FRONT CABLE - INSTALLATION, PARKING BRAKE LEVER	5-77
FRONT CABLE - REMOVAL, PARKING BRAKE LEVER	5-77
FRONT CENTER BEZEL OUTLETS, INSTALLATION	24-45
FRONT CENTER BEZEL OUTLETS, REMOVAL	24-44
FRONT CONTROL MODULE - DESCRIPTION	8E-7
FRONT CONTROL MODULE - OPERATION	8E-7
FRONT CONTROL MODULE, DIAGNOSIS AND TESTING	8E-7
FRONT CRADLE CROSSMEMBER - DESCRIPTION	13-14
FRONT CRADLE CROSSMEMBER THREAD REPAIR - DESCRIPTION	13-14
FRONT CROSSMEMBER MOUNT BUSHINGS - INSTALLATION	13-17
FRONT CROSSMEMBER MOUNT BUSHINGS - REMOVAL	13-17
FRONT DEMISTER OUTLETS, INSTALLATION	24-45
FRONT DEMISTER OUTLETS, REMOVAL	24-44
FRONT DISC BRAKE CALIPER ADAPTER - INSTALLATION	5-31
FRONT DISC BRAKE CALIPER ADAPTER - REMOVAL	5-31
FRONT DISC BRAKE CALIPER (CONTINENTAL TEVES BRAKES) - INSTALLATION	5-27
FRONT DISC BRAKE CALIPER (CONTINENTAL TEVES BRAKES) - REMOVAL	5-24
FRONT DISC BRAKE CALIPER (TRW BRAKES) - INSTALLATION	5-27
FRONT DISC BRAKE CALIPER (TRW BRAKES) - REMOVAL	5-24
FRONT DISC BRAKE SHOES (CONTINENTAL TEVES BRAKES) - INSTALLATION	5-16
FRONT DISC BRAKE SHOES (CONTINENTAL TEVES BRAKES) - REMOVAL	5-15
FRONT DISC BRAKE SHOES (TRW BRAKES) - INSTALLATION	5-17
FRONT DISC BRAKE SHOES (TRW BRAKES) - REMOVAL	5-15
FRONT DOOR GLASS RUN WEATHERSTRIP - INSTALLATION	23-166
FRONT DOOR GLASS RUN WEATHERSTRIP - REMOVAL	23-166
FRONT DOOR INNER BELT MOLDING - INSTALLATION	23-168
FRONT DOOR INNER BELT MOLDING - REMOVAL	23-168
FRONT DOOR OUTER BELT MOLDING - INSTALLATION	23-167
FRONT DOOR OUTER BELT MOLDING - REMOVAL	23-167
FRONT DOOR WEATHERSTRIP - INSTALLATION	23-168
FRONT DOOR WEATHERSTRIP - REMOVAL	23-168
FRONT FASCIA - INSTALLATION	13-1
FRONT FASCIA - REMOVAL	13-1
FRONT FENDER - INSTALLATION	23-52
FRONT FENDER - REMOVAL	23-51
FRONT FOG LAMP - DIAGNOSIS AND TESTING	8L-7
FRONT FOG LAMP - INSTALLATION	8L-8
FRONT FOG LAMP - REMOVAL	8L-8
FRONT FOG LAMP UNIT ALIGNMENT - EXPORT - STANDARD PROCEDURE	8L-9
FRONT FOG LAMP UNIT ALIGNMENT - STANDARD PROCEDURE	8L-9
FRONT HEATER CORE, INSTALLATION	24-86
FRONT HEATER CORE, REMOVAL	24-85
FRONT HEATER CORE TUBES, INSTALLATION	24-85
FRONT HEATER CORE TUBES, REMOVAL	24-84
FRONT INBOARD - INSTALLATION, SEAT BELT BUCKLE	8O-35
FRONT INBOARD - REMOVAL, SEAT BELT BUCKLE	8O-35
FRONT MOUNT - INSTALLATION	9-134,9-50
FRONT MOUNT - REMOVAL	9-134,9-50
FRONT SEAT - INSTALLATION	23-110
FRONT SEAT - REMOVAL	23-108
FRONT SEAT BACK - INSTALLATION	23-111
FRONT SEAT BACK - REMOVAL	23-111
FRONT SEAT BACK ASSIST STRAP - INSTALLATION	23-112
FRONT SEAT BACK ASSIST STRAP - REMOVAL	23-112
FRONT SEAT BACK COVER - INSTALLATION	23-116
FRONT SEAT BACK COVER - REMOVAL	23-113
FRONT SEAT BACK PANEL - INSTALLATION	23-113
FRONT SEAT BACK PANEL - REMOVAL	23-112
FRONT SEAT CUSHION - INSTALLATION	23-118
FRONT SEAT CUSHION - OCS - INSTALLATION	23-120
FRONT SEAT CUSHION - OCS - REMOVAL	23-119
FRONT SEAT CUSHION - REMOVAL	23-117
FRONT SEAT CUSHION SIDE COVER - INSTALLATION	23-121
FRONT SEAT CUSHION SIDE COVER - OCS - INSTALLATION	23-122
FRONT SEAT CUSHION SIDE COVER - OCS - REMOVAL	23-121
FRONT SEAT CUSHION SIDE COVER - REMOVAL	23-120
FRONT SEAT RISER - MANUAL - OCS - INSTALLATION	23-123
FRONT SEAT RISER - MANUAL - OCS - REMOVAL	23-123
FRONT SEAT TRACK - REAR COVER - INSTALLATION	23-128
FRONT SEAT TRACK - REAR COVER - REMOVAL	23-128
FRONT SEAT TRACK ADJUSTER/MANUAL - OCS - INSTALLATION	23-128
FRONT SEAT TRACK ADJUSTER/MANUAL - OCS - REMOVAL	23-126
FRONT SEAT TRACK ADJUSTER/POWER - OCS - INSTALLATION	23-125
FRONT SEAT TRACK ADJUSTER/POWER - OCS - REMOVAL	23-124
FRONT SEAT TRACK MANUAL ADJUSTER - INSTALLATION	23-126
FRONT SEAT TRACK MANUAL ADJUSTER - REMOVAL	23-125
FRONT SEAT TRACK POWER ADJUSTER - INSTALLATION	23-124
FRONT SEAT TRACK POWER ADJUSTER - REMOVAL	23-124
FRONT SEAT TRACK REAR COVER - OCS - INSTALLATION	23-129
FRONT SEAT TRACK REAR COVER - OCS - REMOVAL	23-129
FRONT SUSPENSION - DESCRIPTION	2-2
FRONT SUSPENSION - OPERATION	2-2
FRONT SUSPENSION FASTENER TORQUE, SPECIFICATIONS	2-3
FRONT SUSPENSION, SPECIAL TOOLS	2-3
FRONT WHEEL SPEED SENSOR - INSTALLATION	5-92
FRONT WHEEL SPEED SENSOR - REMOVAL	5-91
FRONT WHEELHOUSE SPLASH SHIELD - INSTALLATION	23-57
FRONT WHEELHOUSE SPLASH SHIELD - REMOVAL	23-57
FRONT WIPER ARM ALIGNMENT - STANDARD PROCEDURE	8R-9
FRONT WIPER ARMS - INSTALLATION	8R-9
FRONT WIPER ARMS - REMOVAL	8R-9
FRONT WIPER MOTOR - INSTALLATION	8R-10
FRONT WIPER MOTOR - REMOVAL	8R-9
FRONT WIPER SYSTEM - DIAGNOSIS AND TESTING	8R-2

Description	Group-Page
FRONT WIPER/WASHER SWITCH - DIAGNOSIS AND TESTING	8R-2
FRONT-WHEEL-DRIVE - INSTALLATION	2-36
FRONT-WHEEL-DRIVE - REMOVAL	2-36
FUEL CORRECTION OR ADAPTIVE MEMORIES, OPERATION	14-24
FUEL DELIVERY SYSTEM - DIAGNOSIS AND TESTING	14-2
FUEL DOSING PUMP - DESCRIPTION	24-117
FUEL DOSING PUMP - INSTALLATION	24-117
FUEL DOSING PUMP - OPERATION	24-117
FUEL DOSING PUMP - REMOVAL	24-117
FUEL ENGINE OIL - DESCRIPTION, FLEXIBLE	0-3
FUEL FILL DOOR - INSTALLATION	23-52
FUEL FILL DOOR - REMOVAL	23-52
FUEL FILL DOOR BLOCKER LATCH - INSTALLATION	23-53
FUEL FILL DOOR BLOCKER LATCH - REMOVAL	23-53
FUEL FILL DOOR BLOCKER LATCH STRIKER - INSTALLATION	23-53
FUEL FILL DOOR BLOCKER LATCH STRIKER - REMOVAL	23-53
FUEL FILL DOOR BLOCKER LOCKOUT LINK - INSTALLATION	23-54
FUEL FILL DOOR BLOCKER LOCKOUT LINK - REMOVAL	23-54
FUEL FILLER CAP - DESCRIPTION	25-13
FUEL FILLER CAP - OPERATION	25-13
FUEL INJECTOR - DESCRIPTION	14-30
FUEL INJECTOR - OPERATION	14-31
FUEL LEVEL SENDING UNIT / SENSOR - DESCRIPTION	14-5
FUEL LEVEL SENDING UNIT / SENSOR - INSTALLATION	14-6
FUEL LEVEL SENDING UNIT / SENSOR - OPERATION	14-5
FUEL LEVEL SENDING UNIT / SENSOR - REMOVAL	14-5
FUEL LINES/HOSES AND CLAMPS - DESCRIPTION	14-7
FUEL PRESSURE GAUGE - STANDARD PROCEDURE	14-3
FUEL PRESSURE REGULATOR - INSTALLATION	14-7
FUEL PRESSURE REGULATOR - OPERATION	14-7
FUEL PRESSURE REGULATOR - REMOVAL	14-7
FUEL PUMP - DESCRIPTION	14-8
FUEL PUMP - OPERATION	14-8
FUEL PUMP MODULE - DESCRIPTION	14-8
FUEL PUMP MODULE - OPERATION	14-9
FUEL PUMP RELAY - DESCRIPTION	14-32
FUEL PUMP RELAY - OPERATION	14-32
FUEL REQUIREMENTS - DESCRIPTION	0-4
FUEL REQUIREMENTS - DIESEL ENGINE - DESCRIPTION	0-6
FUEL, SPECIAL TOOLS	14-27,14-4
FUEL SYSTEM PRESSURE RELEASE PROCEDURE - STANDARD PROCEDURE	14-2
FUEL SYSTEM PRESSURE, SPECIFICATIONS	14-4
FUEL TANK - DESCRIPTION	14-12
FUEL TANK - OPERATION	14-12
FUEL TANK - STANDARD PROCEDURE, DRAINING	14-2
FUEL TANK FILLER TUBE - INSTALLATION	14-17
FUEL TANK FILLER TUBE - REMOVAL	14-16
FULL OPEN SWITCH - DESCRIPTION	8N-11, 8N-52
FUNCTIONS - DESCRIPTION, CIRCUIT	8W-01-6
FUSE - DESCRIPTION, IOD	8W-97-3
FUSE - OPERATION, IOD	8W-97-3
FUSES POWERING SEVERAL LOADS - STANDARD PROCEDURE, TESTING FOR A SHORT TO GROUND ON	8W-01-10
FWD - FOLD-IN-FLOOR SEATING - INSTALLATION	2-45
FWD - FOLD-IN-FLOOR SEATING - REMOVAL	2-45
FWD - INSTALLATION	2-45
FWD - INSTALLATION, REAR WHEEL SPEED SENSOR	5-93
FWD - INSTALLATION, SPRING	2-42
FWD - REMOVAL	2-45
FWD - REMOVAL, REAR WHEEL SPEED SENSOR	5-93
FWD - REMOVAL, SPRING	2-40
GALLERY PLUGS - STANDARD PROCEDURE, ENGINE CORE AND OIL	9-10,9-88
GAP AND FLUSH MEASUREMENTS - SPECIFICATIONS	23-177
GAP, SPECIFICATIONS - WHEEL SPEED SENSOR AIR	5-91
GAS STRUT - SECOND ROW - FOLD-IN-FLOOR - INSTALLATION, SEAT	23-139
GAS STRUT - SECOND ROW - FOLD-IN-FLOOR - REMOVAL, SEAT	23-138
GASKET - DIAGNOSIS AND TESTING, CYLINDER HEAD	9-102,9-25
GASKET SURFACE PREPARATION - STANDARD PROCEDURE, ENGINE	9-11,9-87
GASKETS AND SEALERS, STANDARD PROCEDURE - FORM-IN-PLACE	9-11,9-86
GAUGE - STANDARD PROCEDURE, FUEL PRESSURE	14-3
GEAR - DESCRIPTION	19-26
GEAR - INSTALLATION, LHD	19-31
GEAR - INSTALLATION, RHD	19-33
GEAR & LINK ROD - DESCRIPTION, LIFT	8N-16
GEAR & LINK ROD - INSTALLATION, LIFT	8N-17
GEAR & LINK ROD - OPERATION, LIFT	8N-16
GEAR & LINK ROD - REMOVAL, LIFT	8N-16
GEAR - OPERATION	19-26
GEAR - REMOVAL, LHD	19-26
GEAR - REMOVAL, RHD	19-29
GEAR SHIFT CABLE - INSTALLATION	21-234
GEAR SHIFT CABLE - REMOVAL	21-233,21-84
GEAR, SPECIAL TOOLS - POWER STEERING	19-34
GEARSHIFT CABLE ADJUSTMENT, ADJUSTMENTS	21-235
GEARTRAIN - DESCRIPTION, PLANETARY	21-112,21-263
GEARTRAIN - OPERATION, PLANETARY	21-112, 21-263
GENERAL - WARNINGS	8W-01-7
GENERAL DIAGNOSIS - DIAGNOSIS AND TESTING, 4XTE TRANSAXLE	21-149,21-5
GENERATOR - DESCRIPTION	8F-24
GENERATOR - OPERATION	8F-24
GENERATOR DECOUPLER PULLEY - DESCRIPTION	8F-28
GENERATOR DECOUPLER PULLEY - DIAGNOSIS AND TESTING	8F-28
GENERATOR DECOUPLER PULLEY - INSTALLATION	8F-29
GENERATOR DECOUPLER PULLEY - OPERATION	8F-28
GENERATOR DECOUPLER PULLEY - REMOVAL	8F-29
GENERATOR, SPECIFICATIONS	8F-23
GLASS - DESCRIPTION, HEATED	8G-1
GLASS - INSTALLATION, DOOR	23-17
GLASS - INSTALLATION, LIFTGATE	23-164
GLASS - INSTALLATION, SLIDING DOOR	23-163
GLASS - OPERATION, HEATED	8G-2
GLASS - REMOVAL, DOOR	23-16
GLASS - REMOVAL, LIFTGATE	23-164
GLASS - REMOVAL, SLIDING DOOR	23-163
GLASS INTEGRAL ANTENNA - EXPORT - DESCRIPTION, QUARTER	8A-13
GLASS INTEGRAL ANTENNA - EXPORT - OPERATION, QUARTER	8A-13
GLASS INTEGRAL ANTENNA, EXPORT - QUARTER	8A-13
GLASS PANEL - INSTALLATION	23-173
GLASS PANEL - REMOVAL	23-173
GLASS PANEL ADJUSTMENT, ADJUSTMENTS - SUNROOF	23-173
GLASS RUN WEATHERSTRIP - INSTALLATION, FRONT DOOR	23-166
GLASS RUN WEATHERSTRIP - REMOVAL, FRONT DOOR	23-166
GLASS-OUTSIDE REARVIEW MIRROR - INSTALLATION	23-61
GLASS-OUTSIDE REARVIEW MIRROR - REMOVAL	23-61
GLOVE BOX - INSTALLATION	23-66
GLOVE BOX - REMOVAL	23-66
GLOVE BOX LAMP SWITCH - INSTALLATION	8L-22
GLOVE BOX LAMP SWITCH - REMOVAL	8L-22
GLOVE BOX LATCH - INSTALLATION	23-66
GLOVE BOX LATCH - REMOVAL	23-66
GLOVE BOX LATCH STRIKER - INSTALLATION	23-66
GLOVE BOX LATCH STRIKER - REMOVAL	23-66
GRID REPAIR PROCEDURE, STANDARD PROCEDURE	8G-5
GRILLE - DESCRIPTION	23-55
GRILLE - INSTALLATION	23-55
GRILLE - INSTALLATION, COWL	23-50
GRILLE - REMOVAL	23-55
GRILLE - REMOVAL, COWL	23-50
GROCERY BAG RETAINER - INSTALLATION, PLASTIC	23-149
GROCERY BAG RETAINER - REMOVAL, PLASTIC	23-149
GROMMET REPLACEMENT, STANDARD PROCEDURE - PUSH-PIN	8N-48
GROUND - OPERATION, PCM	8E-14
GROUND - STANDARD PROCEDURE, TESTING FOR A SHORT TO	8W-01-9
GROUND AND SPLICE INFORMATION - DESCRIPTION, CONNECTOR	8W-01-7
GROUND ON FUSES POWERING SEVERAL LOADS - STANDARD PROCEDURE, TESTING FOR A SHORT TO	8W-01-10
GUIDE - INSTALLATION, UNDER SEAT STORAGE BIN	23-150
GUIDE - REMOVAL, UNDER SEAT STORAGE BIN	23-150
GUIDE PIN BUSHINGS (CONTINENTAL TEVES BRAKES) - ASSEMBLY, CALIPER	5-25
GUIDE PIN BUSHINGS (CONTINENTAL TEVES BRAKES) - DISASSEMBLY, CALIPER	5-24
GUIDE PINS (TRW BRAKES) - INSTALLATION, DISC BRAKE CALIPER	5-32
GUIDE PINS (TRW BRAKES) - REMOVAL, DISC BRAKE CALIPER	5-31
HALF SHAFT - DIAGNOSIS AND TESTING	3-1
HALF SHAFT - FRONT - DESCRIPTION	3-1
HALF SHAFT - FRONT - INSTALLATION	3-4
HALF SHAFT - FRONT - REMOVAL	3-2
HALF SHAFT - FRONT - SPECIFICATIONS	3-6
HANDLE - INSTALLATION, ASSIST	23-79
HANDLE - INSTALLATION, EXTERIOR	23-22, 23-40
HANDLE - INSTALLATION, INSIDE LATCH	23-34
HANDLE - INSTALLATION, OUTSIDE	23-36
HANDLE - INSTALLATION, RECLINER	23-108
HANDLE - REMOVAL, ASSIST	23-79
HANDLE - REMOVAL, EXTERIOR	23-21,23-40
HANDLE - REMOVAL, INSIDE LATCH	23-34
HANDLE - REMOVAL, OUTSIDE	23-35
HANDLE - REMOVAL, RECLINER	23-108
HANDLE ACTUATOR - INSTALLATION, INSIDE	23-27
HANDLE ACTUATOR - REMOVAL, INSIDE	23-27
HANDLE CABLE - INSTALLATION, INSIDE	23-38
HANDLE CABLE - INSTALLATION, OUTSIDE	23-37
HANDLE CABLE - REMOVAL, INSIDE	23-37
HANDLE CABLE - REMOVAL, OUTSIDE	23-37
HANDLE SWITCH - DESCRIPTION, EXTERIOR	8N-10
HANDLE SWITCH - INSTALLATION, EXTERIOR	8N-10
HANDLE SWITCH - OPERATION, EXTERIOR	8N-10
HANDLE SWITCH - REMOVAL, EXTERIOR	8N-10
HANDLING AIRBAGS - STANDARD PROCEDURE	8O-6
HANDLING TUBING AND FITTINGS, STANDARD PROCEDURE	24-69
HANDS FREE MODULE - INSTALLATION	8T-3
HANDS FREE MODULE - REMOVAL	8T-3
HARNESS - DESCRIPTION, WIRING	8N-59
HARNESS - DIAGNOSIS AND TESTING, WIRING	8W-01-7
HARNESS - INSTALLATION, WIRING	8N-59
HARNESS - OPERATION, WIRING	8N-59
HARNESS - REMOVAL, WIRING	8N-59
HCU (HYDRAULIC CONTROL UNIT) - DESCRIPTION	5-100

Description	Group-Page
HCU (HYDRAULIC CONTROL UNIT) - OPERATION	5-101
HEAD - CLEANING, CYLINDER	9-103,9-26
HEAD - DESCRIPTION, CYLINDER	9-102,9-25
HEAD - INSPECTION, CYLINDER	9-104,9-27
HEAD - INSTALLATION, CYLINDER	9-104,9-27
HEAD - REMOVAL, CYLINDER	9-103,9-26
HEAD COVER - CLEANING, CYLINDER	9-31
HEAD COVER - INSPECTION, CYLINDER	9-31
HEAD COVER - INSTALLATION, CYLINDER	9-32
HEAD COVER - LEFT - INSTALLATION, CYLINDER	9-107
HEAD COVER - LEFT - REMOVAL, CYLINDER	9-107
HEAD COVER - REMOVAL, CYLINDER	9-31
HEAD COVER - RIGHT - INSTALLATION, CYLINDER	9-106
HEAD COVER - RIGHT - REMOVAL, CYLINDER	9-106
HEAD COVER(S) - DESCRIPTION, CYLINDER	9-105
HEAD GASKET - DIAGNOSIS AND TESTING, CYLINDER	9-102,9-25
HEAD OFF - INSTALLATION, CYLINDER	9-111, 9-33
HEAD OFF - REMOVAL, CYLINDER	9-109,9-33
HEAD ON - INSTALLATION, CYLINDER	9-111, 9-33
HEAD ON - REMOVAL, CYLINDER	9-111,9-33
HEADER TRIM - INSTALLATION, REAR	23-96
HEADER TRIM - REMOVAL, REAR	23-96
HEADLAMP - DIAGNOSIS AND TESTING	8L-11
HEADLAMP - INSTALLATION	8L-13
HEADLAMP - REMOVAL	8L-12
HEADLAMP SWITCH - DIAGNOSIS AND TESTING	8L-13
HEADLAMP SWITCH - INSTALLATION	8L-13
HEADLAMP SWITCH - REMOVAL	8L-13
HEADLAMP UNIT - EXPORT - INSTALLATION	8L-17
HEADLAMP UNIT - EXPORT - REMOVAL	8L-17
HEADLAMP UNIT - INSTALLATION	8L-15
HEADLAMP UNIT - REMOVAL	8L-15
HEADLAMP UNIT ALIGNMENT - EXPORT - STANDARD PROCEDURE	8L-15
HEADLAMP UNIT ALIGNMENT - STANDARD PROCEDURE	8L-14
HEADLINER - INSTALLATION	23-92
HEADLINER - REMOVAL	23-91
HEADREST - INSTALLATION	23-106
HEADREST - REMOVAL	23-106
HEADREST SLEEVE - INSTALLATION	23-107
HEADREST SLEEVE - REMOVAL	23-107
HEADREST SLEEVE - SECOND ROW - FOLD-IN-FLOOR - INSTALLATION	23-131
HEADREST SLEEVE - SECOND ROW - FOLD-IN-FLOOR - REMOVAL	23-131
HEADREST SLEEVE - THIRD ROW - FOLD-IN-FLOOR - INSTALLATION	23-153
HEADREST SLEEVE - THIRD ROW - FOLD-IN-FLOOR - REMOVAL	23-152
HEAT DUCT - INSTALLATION, REAR FLOOR	24-63
HEAT DUCT - REMOVAL, REAR FLOOR	24-63
HEAT SHIELDS - DESCRIPTION	11-7
HEAT SHIELDS - INSTALLATION	11-7
HEAT SHIELDS - OPERATION	11-7
HEAT SHIELDS - REMOVAL	11-7
HEAT STAKING - STANDARD PROCEDURE	23-9
HEATED GLASS - DESCRIPTION	8G-1
HEATED GLASS - OPERATION	8G-2
HEATED MIRRORS - DESCRIPTION	8G-6
HEATED MIRRORS - OPERATION	8G-6
HEATED SEAT ELEMENTS - DESCRIPTION	8G-11
HEATED SEAT ELEMENTS - OPERATION	8G-11
HEATED SEAT ELEMENTS, DIAGNOSIS AND TESTING	8G-11
HEATED SEAT MODULE - DESCRIPTION	8E-8
HEATED SEAT MODULE - OPERATION	8E-8
HEATED SEAT MODULE, DIAGNOSIS AND TESTING	8E-9
HEATED SEAT SENSOR - DESCRIPTION	8G-13
HEATED SEAT SENSOR - OPERATION	8G-13
HEATED SEAT SENSOR, DIAGNOSIS AND TESTING	8G-13
HEATED SEAT SWITCH - DESCRIPTION	8G-8
HEATED SEAT SWITCH - OPERATION	8G-9
HEATED SEAT SWITCH, DIAGNOSIS AND TESTING - DRIVER	8G-9
HEATED SEAT SYSTEM - DESCRIPTION	8G-7
HEATED SEAT SYSTEM - OPERATION	8G-8
HEATED SEAT SYSTEM, DIAGNOSIS AND TESTING	8G-8
HEATER - DESCRIPTION, CABIN	24-113
HEATER - DESCRIPTION, ENGINE BLOCK	7-20
HEATER - INSTALLATION, ENGINE BLOCK	7-21
HEATER - OPERATION, ENGINE BLOCK	7-20
HEATER - REMOVAL, ENGINE BLOCK	7-21
HEATER AND AIR CONDITIONER, DESCRIPTION	24-1
HEATER AND AIR CONDITIONER, OPERATION	24-4
HEATER CONTROL - DESCRIPTION, A/C	24-19
HEATER CORE - DESCRIPTION	24-102,24-83
HEATER CORE - OPERATION	24-102,24-84
HEATER CORE FILLING, STANDARD PROCEDURE - REAR	24-102
HEATER CORE, INSTALLATION - FRONT	24-86
HEATER CORE, REMOVAL - FRONT	24-85
HEATER CORE TUBES, INSTALLATION - FRONT	24-85
HEATER CORE TUBES, REMOVAL - FRONT	24-84
HEATER, DIAGNOSIS AND TESTING - SUPPLEMENTAL CABIN	24-114
HEATER HOSES - INSTALLATION	24-105,24-119
HEATER HOSES - REMOVAL	24-104,24-119
HEATER INLET HOSE - INSTALLATION	24-87
HEATER INLET HOSE - REMOVAL	24-86
HEATER PERFORMANCE TEST, DIAGNOSIS AND TESTING	24-10
HEATER PIPES - INSTALLATION	24-120
HEATER PIPES - REMOVAL	24-119
HEATER RETURN HOSE - INSTALLATION	24-89
HEATER RETURN HOSE - REMOVAL	24-88
HEATER TESTING - DIAGNOSIS AND TESTING, ENGINE BLOCK	7-21
HEATER TUBES, INSTALLATION - UNDERBODY	24-112
HEATER TUBES, REMOVAL - UNDERBODY	24-109
HEATER UNIT - INSTALLATION	24-122
HEATER UNIT - REMOVAL	24-121
HEATER WIRING - INSTALLATION	24-122
HEATER WIRING - REMOVAL	24-122
HEAVY DUTY, CARGO - INSTALLATION, AWD	2-36
HEAVY DUTY, CARGO - REMOVAL, AWD	2-36
HEIGHT ADJUSTER - B OR C-PILLAR - INSTALLATION, SEAT BELT	8O-38
HEIGHT ADJUSTER - B OR C-PILLAR - REMOVAL, SEAT BELT	8O-38
HEIGHT ADJUSTER KNOB - INSTALLATION, SEAT BELT	8O-38
HEIGHT ADJUSTER KNOB - REMOVAL, SEAT BELT	8O-38
HEIGHT MEASUREMENT - STANDARD PROCEDURE, CURB	2-55
HIGH AND LOW LIMITS, DESCRIPTION	25-9
HIGH MOUNTED STOP LAMP - INSTALLATION, CENTER	8L-6
HIGH MOUNTED STOP LAMP - REMOVAL, CENTER	8L-6
HIGH MOUNTED STOP LAMP UNIT - INSTALLATION, CENTER	8L-6
HIGH MOUNTED STOP LAMP UNIT - REMOVAL, CENTER	8L-6
HIGH PRESSURE RELIEF VALVE, DESCRIPTION	24-72
HIGH PRESSURE RELIEF VALVE, OPERATION	24-72
HIGH SPEED OPERATION - STANDARD PROCEDURE, TIRE PRESSURE	22-17
HINGE - INSTALLATION	23-18,23-40,23-62
HINGE - INSTALLATION, CENTER	23-24
HINGE - INSTALLATION, LOWER	23-28
HINGE - INSTALLATION, UPPER	23-36
HINGE - REMOVAL	23-17,23-40,23-62
HINGE - REMOVAL, BENCH SEAT BACK	23-146
HINGE - REMOVAL, CENTER	23-24
HINGE - REMOVAL, LOWER	23-28
HINGE - REMOVAL, UPPER	23-36
HINGE COVERS - QUAD BUCKET, 50/50 SPLIT, BENCH - INSTALLATION, SEAT BACK	23-146
HINGE COVERS - QUAD BUCKET, 50/50 SPLIT, BENCH - REMOVAL, SEAT BACK	23-146
HOISTING - STANDARD PROCEDURE	0-24
HOLDDOWN - INSTALLATION, BATTERY	8F-16
HOLDDOWN - REMOVAL, BATTERY	8F-16
HOLDER - FLAP AND SPRING ASSEMBLY - INSTALLATION, QUAD BUCKET SEAT SIDE SHIELD/CUP	23-151
HOLDER - FLAP AND SPRING ASSEMBLY - REMOVAL, QUAD BUCKET SEAT SIDE SHIELD/CUP	23-151
HOLDER - FOLD-IN-FLOOR - INSTALLATION, SIDE SHIELD CUP	23-160
HOLDER - FOLD-IN-FLOOR - REMOVAL, SIDE SHIELD CUP	23-160
HOLDER - INSTALLATION, CUP	23-65
HOLDER - INSTALLATION, QUAD BUCKET SEAT SIDE SHIELD - NO CUP	23-143
HOLDER - INSTALLATION, QUAD BUCKET SEAT SIDE SHIELD/CUP	23-142
HOLDER - REMOVAL, CUP	23-65
HOLDER - REMOVAL, QUAD BUCKET SEAT SIDE SHIELD - NO CUP	23-143
HOLDER - REMOVAL, QUAD BUCKET SEAT SIDE SHIELD/CUP	23-141
HOLDING CLUTCHES - DESCRIPTION	21-236, 21-86
HOLDING CLUTCHES - OPERATION	21-236, 21-86
HONING - STANDARD PROCEDURE, CYLINDER BORE	9-115,9-36
HOOD - INSTALLATION	23-63
HOOD - REMOVAL	23-62
HOOD AJAR SWITCH - EXPORT - INSTALLATION	8Q-3
HOOD AJAR SWITCH - EXPORT - REMOVAL	8Q-3
HORN CHIRP PREFERENCE - STANDARD PROCEDURE	8N-24
HORN, DIAGNOSIS AND TESTING	8H-3
HORN SWITCH - DESCRIPTION	8H-4
HORN SYSTEM - DESCRIPTION	8H-1
HORN SYSTEM - OPERATION	8H-1
HORN SYSTEM, DIAGNOSIS AND TESTING	8H-1
HOSE - INSTALLATION, HEATER INLET	24-87
HOSE - INSTALLATION, HEATER RETURN	24-89
HOSE - REMOVAL, HEATER INLET	24-86
HOSE - REMOVAL, HEATER RETURN	24-88
HOSE CLAMPS - DESCRIPTION	7-1
HOSE CLAMPS - OPERATION	7-2
HOSES - DESCRIPTION, BRAKE TUBES	5-14
HOSES - INSPECTION, BRAKE TUBES	5-14
HOSES - INSTALLATION, HEATER	24-105,24-119
HOSES - INSTALLATION, WASHER	8R-12
HOSES - OPERATION, BRAKE TUBES	5-14
HOSES - REMOVAL, HEATER	24-104,24-119
HOSES - REMOVAL, WASHER	8R-11
HOSES AND CLAMP - STANDARD PROCEDURE	14-7
HOUSING - INSTALLATION, AIR CLEANER	9-102,9-25
HOUSING - INSTALLATION, HVAC	24-62
HOUSING - REMOVAL, AIR CLEANER	9-101,9-25
HOUSING - REMOVAL, HVAC	24-60
HOUSING FLUID LEAKAGE - DIAGNOSIS AND TESTING, TORQUE CONVERTER	21-154, 21-9
HUB / BEARING - DESCRIPTION	2-30,2-5
HUB / BEARING - INSTALLATION	2-33,2-5
HUB / BEARING - OPERATION	2-30,2-5
HUB / BEARING - REMOVAL	2-31,2-5
HUB AND BEARING - DIAGNOSIS AND TESTING	2-31,2-5
HVAC - LWB - INSTALLATION, SEAT BELT & RETRACTOR - SECOND ROW - RIGHT OUTBOARD WITH REAR	8O-41
HVAC - LWB - REMOVAL, SEAT BELT & RETRACTOR - SECOND ROW - RIGHT OUTBOARD WITH REAR	8O-41
HVAC HOUSING - INSTALLATION	24-62
HVAC HOUSING - REMOVAL	24-60
HVAC LOUVER - INSTALLATION, REAR	23-97
HVAC LOUVER - REMOVAL, REAR	23-96

Description	Group-Page
HYDRAULIC CIRCUITS AND VALVES - OPERATION	5-95
HYDRAULIC LASH ADJUSTER NOISE DIAGNOSIS - DIAGNOSIS AND TESTING	9-34
HYDRAULIC LASH ADJUSTERS - INSTALLATION	9-35
HYDRAULIC LASH ADJUSTERS - REMOVAL	9-35
HYDRAULIC LIFTERS - DIAGNOSIS AND TESTING	9-116
HYDRAULIC LIFTERS (CAM IN BLOCK) - DESCRIPTION	9-116
HYDRAULIC LIFTERS (CAM IN BLOCK) - INSTALLATION	9-117
HYDRAULIC LIFTERS (CAM IN BLOCK) - REMOVAL	9-117
HYDRAULIC PRESSURE TESTS - DIAGNOSIS AND TESTING	21-150,21-6
HYDRAULIC SCHEMATICS, SCHEMATICS AND DIAGRAMS - 4XTE TRANSAXLE	21-199, 21-54
HYDROSTATIC LOCKED ENGINE, STANDARD PROCEDURE	9-10,9-87
ICU - ASSEMBLY	5-106
ICU - DISASSEMBLY	5-105
ICU (INTEGRATED CONTROL UNIT) - DESCRIPTION	5-102
ICU (INTEGRATED CONTROL UNIT) - OPERATION	5-102
IDENTIFICATION - DESCRIPTION, VEHICLE	23-1
IDENTIFICATION AND INFORMATION - DESCRIPTION, SECTION	8W-01-6
IDLE AIR CONTROL MOTOR - DESCRIPTION	14-33
IDLE AIR CONTROL MOTOR - INSTALLATION	14-33
IDLE AIR CONTROL MOTOR - OPERATION	14-33
IDLE AIR CONTROL MOTOR - REMOVAL	14-33
IGNITION COIL - DESCRIPTION	8I-6
IGNITION COIL - OPERATION	8I-6
IGNITION SENSE - PCM INPUT - OPERATION	8E-14
IGNITION SWITCH - INSTALLATION	19-19
IGNITION SWITCH - REMOVAL	19-17
IGNITION SYSTEM - DESCRIPTION	8I-1
IGNITION SYSTEM - OPERATION	8I-1
IGNITION-OFF DRAW TEST, STANDARD PROCEDURE	8F-13
ILLUMINATION LAMPS - INSTALLATION, CLUSTER	8L-21
ILLUMINATION LAMPS - REMOVAL, CLUSTER	8L-21
IMPACT SENSOR - DESCRIPTION	8O-18
IMPACT SENSOR - INSTALLATION	8O-21
IMPACT SENSOR - REMOVAL	8O-19
INBOARD - 50/50 BENCH - INSTALLATION, SEAT BELT BUCKLE - SECOND ROW	8O-38
INBOARD - 50/50 BENCH - REMOVAL, SEAT BELT BUCKLE - SECOND ROW	8O-37
INBOARD - INSTALLATION, SEAT BELT BUCKLE - FRONT	8O-35
INBOARD - QUAD BUCKET - INSTALLATION, SEAT BELT BUCKLE - FIRST ROW	8O-36
INBOARD - QUAD BUCKET - REMOVAL, SEAT BELT BUCKLE - FIRST ROW	8O-35
INBOARD - REMOVAL, SEAT BELT BUCKLE - FRONT	8O-35
INDICATOR - DESCRIPTION, PASSENGER AIRBAG DISABLED	8O-33
INDICATOR - INSTALLATION, PASSENGER AIRBAG DISABLED	8O-34
INDICATOR - OPERATION, PASSENGER AIRBAG DISABLED	8O-33
INDICATOR - REMOVAL, PASSENGER AIRBAG DISABLED	8O-34
INDICATOR LAMP - DESCRIPTION, VTSS/SKIS	8Q-8
INDICATOR LAMP - OPERATION, VTSS/SKIS	8Q-8
INDICATORS - DIAGNOSIS AND TESTING, TREAD WEAR	22-16
INFLATABLE KNEE - INSTALLATION, BLOCKER	23-75
INFLATABLE KNEE - REMOVAL, BLOCKER	23-75
INFLATION PRESSURES - STANDARD PROCEDURE, TIRE	22-16
INFO CENTER - DESCRIPTION, ELECTRONIC VEHICLE	8M-7
INFO CENTER - OPERATION, ELECTRONIC VEHICLE	8M-7
INFRARED TEMPERATURE SENSOR - DESCRIPTION	24-28
INFRARED TEMPERATURE SENSOR - OPERATION	24-28
INITIAL OPERATION - STANDARD PROCEDURE, POWER STEERING PUMP	19-37
INJECTION SYSTEM - OPERATION	14-22
INJECTOR - DESCRIPTION, FUEL	14-30
INJECTOR - OPERATION, FUEL	14-31
INLET AIR TEMPERATURE SENSOR - DESCRIPTION	14-34
INLET FILTER - INSTALLATION	14-17
INLET FILTER - REMOVAL	14-17
INLET HOSE - INSTALLATION, HEATER	24-87
INLET HOSE - REMOVAL, HEATER	24-86
INLET TUBE - 2.4L - DESCRIPTION, WATER PUMP	7-36
INLET TUBE - 2.4L - INSTALLATION, WATER PUMP	7-36
INLET TUBE - 2.4L - REMOVAL, WATER PUMP	7-36
INLET TUBE - 3.3/3.8L - INSTALLATION, WATER PUMP	7-37
INLET TUBE - 3.3/3.8L - REMOVAL, WATER PUMP	7-37
INNER - INSTALLATION, CV BOOT	3-7
INNER - REMOVAL, CV BOOT	3-6
INNER BELT MOLDING - INSTALLATION, FRONT DOOR	23-168
INNER BELT MOLDING - REMOVAL, FRONT DOOR	23-168
INPUT - DESCRIPTION, SPEED SENSOR	21-120, 21-271
INPUT - INSTALLATION, SPEED SENSOR	21-121,21-272
INPUT - OPERATION, DATA BUS COMMUNICATION RECEIVE - PCM	8E-14
INPUT - OPERATION, IGNITION SENSE - PCM	8E-14
INPUT - OPERATION, SENSOR RETURN - PCM	8E-14
INPUT - OPERATION, SPEED SENSOR	21-120, 21-271
INPUT - REMOVAL, SPEED SENSOR	21-121, 21-272
INPUT CLUTCH ASSEMBLY - ASSEMBLY	21-246, 21-95
INPUT CLUTCH ASSEMBLY - DISASSEMBLY	21-237,21-86
INSERT - FOLD-IN-FLOOR - INSTALLATION, REAR FLOOR TUB CARPETS	23-96
INSERT - FOLD-IN-FLOOR - INSTALLATION, SECOND ROW FLOOR TUB CARPET	23-98
INSERT - FOLD-IN-FLOOR - REMOVAL, REAR FLOOR TUB CARPETS	23-95
INSERT - FOLD-IN-FLOOR - REMOVAL, SECOND ROW FLOOR TUB CARPET	23-98
INSTRUMENT CLUSTER - DESCRIPTION	8J-1
INSTRUMENT CLUSTER - OPERATION	8J-1
INSTRUMENT PANEL - INSTALLATION, LOWER	23-73
INSTRUMENT PANEL - REMOVAL, LOWER	23-73
INSTRUMENT PANEL ANTENNA CABLE - INSTALLATION	8A-12
INSTRUMENT PANEL ANTENNA CABLE - REMOVAL	8A-12
INSTRUMENT PANEL ASSEMBLY - INSTALLATION	23-70
INSTRUMENT PANEL ASSEMBLY - REMOVAL	23-67
INSTRUMENT PANEL CENTER BEZEL - INSTALLATION	23-72
INSTRUMENT PANEL CENTER BEZEL - REMOVAL	23-71
INSTRUMENT PANEL DEMISTER DUCTS - INSTALLATION	24-54
INSTRUMENT PANEL DEMISTER DUCTS - REMOVAL	24-54
INSTRUMENT PANEL DUCTS - INSTALLATION	24-55
INSTRUMENT PANEL DUCTS - REMOVAL	24-55
INSTRUMENT PANEL OUTLETS, INSTALLATION	24-45
INSTRUMENT PANEL OUTLETS, REMOVAL	24-45
INSTRUMENT PANEL RIGHT END CAP - INSTALLATION	23-72
INSTRUMENT PANEL RIGHT END CAP - REMOVAL	23-72
INSTRUMENT PANEL TOP COVER - INSTALLATION	23-72
INSTRUMENT PANEL TOP COVER - REMOVAL	23-72
INSTRUMENT PANEL TOP PAD ASSEMBLY - INSTALLATION	23-77
INSTRUMENT PANEL TOP PAD ASSEMBLY - REMOVAL	23-77
INTAKE MANIFOLD - DESCRIPTION	9-147,9-60
INTAKE MANIFOLD - INSTALLATION, LOWER	9-151
INTAKE MANIFOLD - INSTALLATION, UPPER	9-149
INTAKE MANIFOLD - LOWER - CLEANING	9-151
INTAKE MANIFOLD - LOWER - INSPECTION	9-151,9-62
INTAKE MANIFOLD - LOWER - INSTALLATION	9-62
INTAKE MANIFOLD - LOWER - REMOVAL	9-62
INTAKE MANIFOLD - REMOVAL, LOWER	9-150
INTAKE MANIFOLD - REMOVAL, UPPER	9-148
INTAKE MANIFOLD - UPPER - INSPECTION	9-61
INTAKE MANIFOLD - UPPER - INSTALLATION	9-61
INTAKE MANIFOLD - UPPER - REMOVAL	9-60
INTAKE MANIFOLD LEAKS - DIAGNOSIS AND TESTING	9-147,9-60
INTAKE MANIFOLD VACUUM PORT REPAIR - STANDARD PROCEDURE	9-148
INTAKE PIPE - INSTALLATION, AIR	24-115
INTAKE PIPE - REMOVAL, AIR	24-115
INTAKE/EXHAUST VALVES & SEATS - CLEANING	9-108,9-33
INTAKE/EXHAUST VALVES & SEATS - DESCRIPTION	9-107,9-33
INTAKE/EXHAUST VALVES & SEATS - INSPECTION	9-108
INTAKE/EXHAUST VALVES & SEATS - INSTALLATION	9-109
INTAKE/EXHAUST VALVES & SEATS - OPERATION	9-107
INTAKE/EXHAUST VALVES & SEATS - REMOVAL	9-108
INTEGRAL ANTENNA - EXPORT - DESCRIPTION, QUARTER GLASS	8A-13
INTEGRAL ANTENNA - EXPORT - OPERATION, QUARTER GLASS	8A-13
INTEGRAL ANTENNA, EXPORT - QUARTER GLASS	8A-13
INTEGRATED POWER MODULE - DESCRIPTION	8W-97-1
INTEGRATED POWER MODULE - INSTALLATION	8W-97-2
INTEGRATED POWER MODULE - OPERATION	8W-97-2
INTEGRATED POWER MODULE - REMOVAL	8W-97-2
INTERACTIVE SPEED CONTROL (4 SPEED EATX ONLY) - OPERATION	8P-2
INTERFACE (PCI) BUS, OPERATION - PROGRAMMABLE COMMUNICATIONS	14-25
INTERIOR LAMPS, SPECIFICATIONS	8L-20
INTERLOCK SOLENOID - DESCRIPTION, SHIFT	21-113,21-264
INTERLOCK SOLENOID - DIAGNOSIS AND TESTING, BRAKE/TRANSMISSION SHIFT	21-115,21-266
INTERLOCK SOLENOID - INSTALLATION, SHIFT	21-116,21-267
INTERLOCK SOLENOID - OPERATION, SHIFT	21-114,21-265
INTERLOCK SOLENOID - REMOVAL, SHIFT	21-115,21-266

Description	Group-Page
INTERMEDIATE - INSTALLATION, CABLE - PARKING BRAKE	5-69
INTERMEDIATE - REMOVAL, CABLE - PARKING BRAKE	5-69
INTERNATIONAL SYMBOLS - DESCRIPTION	0-1
INTRODUCTION - DIAGNOSIS AND TESTING, ENGINE DIAGNOSIS	9-3,9-78
IOD FUSE - DESCRIPTION	8W-97-3
IOD FUSE - OPERATION	8W-97-3
JOINT - DESCRIPTION, LOWER BALL	2-10
JOINT - DIAGNOSIS AND TESTING, LOWER BALL	2-10
JOINT - OPERATION, LOWER BALL	2-10
JOINT MOLDING - INSTALLATION, ROOF	23-60
JOINT MOLDING - REMOVAL, ROOF	23-60
JOUNCE BUMPER - DESCRIPTION	2-35
JOUNCE BUMPER - OPERATION	2-35
JUMP STARTING - STANDARD PROCEDURE	0-25
JUNCTION BLOCK - DESCRIPTION, NON-ABS	5-33
JUNCTION BLOCK - INSTALLATION, NON-ABS	5-34
JUNCTION BLOCK - OPERATION, NON-ABS	5-33
JUNCTION BLOCK - REMOVAL, NON-ABS	5-34
KEY - DESCRIPTION, TRANSPONDER	8Q-6
KEY - OPERATION, TRANSPONDER	8Q-6
KEY LOCK TUMBLER - FOLD-IN-FLOOR - INSTALLATION, FLOOR CONSOLE	23-90
KEY LOCK TUMBLER - FOLD-IN-FLOOR - REMOVAL, FLOOR CONSOLE	23-90
KEY REMOTE ENTRY MODULE - DESCRIPTION, SENTRY	8Q-3
KEY REMOTE ENTRY MODULE - DIAGNOSIS AND TESTING, SENTRY	8Q-5
KEY REMOTE ENTRY MODULE - INSTALLATION, SENTRY	8Q-6
KEY REMOTE ENTRY MODULE - OPERATION, SENTRY	8Q-4
KEY REMOTE ENTRY MODULE - REMOVAL, SENTRY	8Q-6
KEY REMOTE ENTRY SYSTEM - DIAGNOSIS AND TESTING, SENTRY	8Q-3
KEYLESS ENTRY TRANSMITTER, DIAGNOSIS AND TESTING	8N-24
KEYLESS ENTRY TRANSMITTER PROGRAMMING - STANDARD PROCEDURE, REMOTE	8N-24
KEY/LOCK CYLINDER - DESCRIPTION	19-20
KEY/LOCK CYLINDER - INSTALLATION	19-20
KEY/LOCK CYLINDER - OPERATION	19-20
KEY/LOCK CYLINDER - REMOVAL	19-20
KNEE - INSTALLATION, BLOCKER-INFLATABLE	23-75
KNEE - REMOVAL, BLOCKER-INFLATABLE	23-75
KNEE BLOCKER AIRBAG - DESCRIPTION	8O-22
KNEE BLOCKER AIRBAG - INSTALLATION	8O-23
KNEE BLOCKER AIRBAG - OPERATION	8O-22
KNEE BLOCKER AIRBAG - REMOVAL	8O-23
KNOB - INSTALLATION, SEAT BELT HEIGHT ADJUSTER	8O-38
KNOB - REMOVAL, SEAT BELT HEIGHT ADJUSTER	8O-38
KNOCK SENSOR - DESCRIPTION	8I-8
KNOCK SENSOR - OPERATION	8I-8
KNUCKLE - DESCRIPTION	2-6
KNUCKLE - INSPECTION, STEERING	2-9
KNUCKLE - INSTALLATION, STEERING	2-9
KNUCKLE - OPERATION	2-7
KNUCKLE - REMOVAL, STEERING	2-7
LABEL, DESCRIPTION - VEHICLE EMISSION CONTROL INFORMATION	25-1
LAMP - DESCRIPTION, VTSS/SKIS INDICATOR	8Q-8
LAMP - DIAGNOSIS AND TESTING, FRONT FOG	8L-7
LAMP - INSTALLATION, CENTER CONSOLE	8L-21
LAMP - INSTALLATION, CENTER HIGH MOUNTED STOP	8L-6
LAMP - INSTALLATION, COURTESY	8L-21
LAMP - INSTALLATION, DOME/CARGO	8L-22
LAMP - INSTALLATION, FRONT FOG	8L-8
LAMP - INSTALLATION, LICENSE	8L-17
LAMP - INSTALLATION, LIFTGATE	8L-22
LAMP - INSTALLATION, PARK/TURN SIGNAL	8L-18
LAMP - INSTALLATION, READING	8L-23
LAMP - INSTALLATION, TAIL	8L-19
LAMP - INSTALLATION, VANITY	8L-24
LAMP - OPERATION, VTSS/SKIS INDICATOR	8Q-8
LAMP - REMOVAL, CENTER CONSOLE	8L-21
LAMP - REMOVAL, CENTER HIGH MOUNTED STOP	8L-6
LAMP - REMOVAL, COURTESY	8L-21
LAMP - REMOVAL, DOME/CARGO	8L-22
LAMP - REMOVAL, FRONT FOG	8L-8
LAMP - REMOVAL, LICENSE	8L-17
LAMP - REMOVAL, LIFTGATE	8L-22
LAMP - REMOVAL, PARK/TURN SIGNAL	8L-18
LAMP - REMOVAL, READING	8L-22
LAMP - REMOVAL, TAIL	8L-18
LAMP - REMOVAL, VANITY	8L-24
LAMP SWITCH - DESCRIPTION, BRAKE	8L-4
LAMP SWITCH - DIAGNOSIS AND TESTING, BRAKE	8L-4
LAMP SWITCH - INSTALLATION, BRAKE	8L-5
LAMP SWITCH - INSTALLATION, CENTER CONSOLE	8L-21
LAMP SWITCH - INSTALLATION, GLOVE BOX	8L-22
LAMP SWITCH - OPERATION, BRAKE	8L-4
LAMP SWITCH - REMOVAL, BRAKE	8L-5
LAMP SWITCH - REMOVAL, CENTER CONSOLE	8L-21
LAMP SWITCH - REMOVAL, GLOVE BOX	8L-22
LAMP UNIT - INSTALLATION, CENTER HIGH MOUNTED STOP	8L-6
LAMP UNIT - INSTALLATION, TAIL	8L-19
LAMP UNIT - REMOVAL, CENTER HIGH MOUNTED STOP	8L-6
LAMP UNIT - REMOVAL, TAIL	8L-19
LAMP UNIT ALIGNMENT - EXPORT - STANDARD PROCEDURE, FRONT FOG	8L-9
LAMP UNIT ALIGNMENT - STANDARD PROCEDURE, FRONT FOG	8L-9
LAMPS - INSTALLATION, CLUSTER ILLUMINATION	8L-21
LAMPS - REMOVAL, CLUSTER ILLUMINATION	8L-21
LAMPS, SPECIFICATIONS - EXTERIOR	8L-3
LAMPS, SPECIFICATIONS - INTERIOR	8L-20
LAMPS/LIGHTING - EXTERIOR - DESCRIPTION	8L-2
LAMPS/LIGHTING - EXTERIOR - OPERATION	8L-2
LAMPS/LIGHTING - EXTERIOR - WARNING	8L-3
LAP BELT - FOLD-IN-FLOOR - INSTALLATION, SEAT BELT CENTER	23-157
LAP BELT - FOLD-IN-FLOOR - REMOVAL, SEAT BELT CENTER	23-157
LASH ADJUSTER NOISE DIAGNOSIS - DIAGNOSIS AND TESTING, HYDRAULIC	9-34
LASH ADJUSTERS - INSTALLATION, HYDRAULIC	9-35
LASH ADJUSTERS - REMOVAL, HYDRAULIC	9-35
LATCH - DESCRIPTION	8N-12,8N-49
LATCH - FOLD-IN-FLOOR - INSTALLATION, FLOOR CONSOLE LID	23-90
LATCH - FOLD-IN-FLOOR - REMOVAL, FLOOR CONSOLE LID	23-90
LATCH - INSTALLATION	23-18,23-41,23-63
LATCH - INSTALLATION	8N-13,8N-50
LATCH - INSTALLATION, FUEL FILL DOOR BLOCKER	23-53
LATCH - INSTALLATION, GLOVE BOX	23-66
LATCH - INSTALLATION, HOLD OPEN	23-25
LATCH / LOCK ASSEMBLY - INSTALLATION	23-27
LATCH / LOCK ASSEMBLY - REMOVAL	23-26
LATCH - OPERATION	8N-12,8N-49
LATCH - REMOVAL	23-18,23-41,23-63
LATCH - REMOVAL	8N-12,8N-49
LATCH - REMOVAL, FUEL FILL DOOR BLOCKER	23-53
LATCH - REMOVAL, GLOVE BOX	23-66
LATCH - REMOVAL, HOLD OPEN	23-25
LATCH ACTUATOR - DESCRIPTION	8N-13
LATCH ACTUATOR - INSTALLATION	8N-14
LATCH ACTUATOR - OPERATION	8N-13
LATCH ACTUATOR - REMOVAL	8N-13
LATCH CABLE - INSTALLATION, HOLD OPEN	23-38
LATCH CABLE - REMOVAL, HOLD OPEN	23-38
LATCH HANDLE - INSTALLATION, INSIDE	23-34
LATCH HANDLE - REMOVAL, INSIDE	23-34
LATCH LOCKING LINK - INSTALLATION, SEAT RISER	23-151
LATCH LOCKING LINK - REMOVAL, SEAT RISER	23-151
LATCH RELEASE CABLE - INSTALLATION	23-64
LATCH RELEASE CABLE - REMOVAL	23-63
LATCH STRIKER - INSTALLATION	23-19,23-42,23-64
LATCH STRIKER - INSTALLATION, FUEL FILL DOOR BLOCKER	23-53
LATCH STRIKER - INSTALLATION, GLOVE BOX	23-66
LATCH STRIKER - INSTALLATION, HOLD OPEN	23-26
LATCH STRIKER - INSTALLATION, REAR	23-29
LATCH STRIKER - REMOVAL	23-19,23-41,23-64
LATCH STRIKER - REMOVAL, FUEL FILL DOOR BLOCKER	23-53
LATCH STRIKER - REMOVAL, GLOVE BOX	23-66
LATCH STRIKER - REMOVAL, HOLD OPEN	23-26
LATCH STRIKER - REMOVAL, REAR	23-29
LEAD - DIAGNOSIS AND TESTING, TIRE/VEHICLE	22-14
LEAF SPRING FRONT - INSTALLATION, BUSHING	2-30
LEAF SPRING FRONT - REMOVAL, BUSHING	2-29
LEAK DETECTION ASSY - INSTALLATION, NATURAL VAC	25-14
LEAK DETECTION ASSY - REMOVAL, NATURAL VAC	25-14
LEAK DETECTION PUMP - INSTALLATION	25-15
LEAK DETECTION PUMP - REMOVAL	25-15
LEAK INSPECTION - DIAGNOSIS AND TESTING, ENGINE OIL	9-8,9-84
LEAK REPAIRING - STANDARD PROCEDURE, TIRE	22-17
LEAK TEST - DIAGNOSIS AND TESTING, COOLING SYSTEM	7-2
LEAKAGE - DIAGNOSIS AND TESTING, TORQUE CONVERTER HOUSING FLUID	21-154,21-9
LEAKAGE TEST - DIAGNOSIS AND TESTING, CYLINDER COMBUSTION PRESSURE	9-85,9-9
LEAKS - DIAGNOSIS AND TESTING, INTAKE MANIFOLD	9-147,9-60
LEAKS, DIAGNOSIS AND TESTING - REFRIGERANT SYSTEM	24-67
LEAKS, DIAGNOSIS AND TESTING - WATER	23-1
LEARN CYCLE, STANDARD PROCEDURE - POWER LIFTGATE	8N-8
LEARN CYCLE, STANDARD PROCEDURE - POWER SLIDING DOOR	8N-48
LEARN PROCEDURE - STANDARD PROCEDURE, QUICK	8E-15
LENS - INSTALLATION, CLUSTER	8J-11
LENS - REMOVAL, CLUSTER	8J-11
LEVEL AND CONDITION CHECK, STANDARD PROCEDURE - FLUID	21-230,21-82
LEVEL CHECK - STANDARD PROCEDURE, COOLANT	7-4
LEVEL CHECK - STANDARD PROCEDURE, ENGINE OIL	9-140
LEVEL CHECK, STANDARD PROCEDURE - ENGINE OIL	9-54
LEVEL CHECKING - STANDARD PROCEDURE, BRAKE FLUID	5-33
LEVEL CHECKING - STANDARD PROCEDURE, POWER STEERING FLUID	19-44
LEVEL SENDING UNIT / SENSOR - DESCRIPTION, FUEL	14-5
LEVEL SENDING UNIT / SENSOR - INSTALLATION, FUEL	14-6
LEVEL SENDING UNIT / SENSOR - OPERATION, FUEL	14-5
LEVEL SENDING UNIT / SENSOR - REMOVAL, FUEL	14-5

Description	Group-Page
LEVEL, STANDARD PROCEDURE - CHECKING BATTERY ELECTROLYTE	8F-14
LEVEL, STANDARD PROCEDURE - REFRIGERANT OIL	24-94
LEVEL SWITCH - DESCRIPTION, BRAKE FLUID	5-10
LEVEL SWITCH - INSTALLATION, BRAKE FLUID	5-11
LEVEL SWITCH - INSTALLATION, WASHER FLUID	8R-11
LEVEL SWITCH - OPERATION, BRAKE FLUID	5-10
LEVEL SWITCH - REMOVAL, BRAKE FLUID	5-11
LEVEL SWITCH - REMOVAL, WASHER FLUID	8R-11
LEVEL TEST, DIAGNOSIS AND TESTING - SYSTEM CHARGE	24-67
LEVER - PARKING BRAKE - INSTALLATION	5-76
LEVER - PARKING BRAKE - REMOVAL	5-75
LEVER AND FRONT CABLE - INSTALLATION, PARKING BRAKE	5-77
LEVER AND FRONT CABLE - REMOVAL, PARKING BRAKE	5-77
LHD - INSTALLATION	5-106,5-39,5-50
LHD - REMOVAL	5-102,5-36,5-46
LHD GEAR - INSTALLATION	19-31
LHD GEAR - REMOVAL	19-26
LICENSE LAMP - INSTALLATION	8L-17
LICENSE LAMP - REMOVAL	8L-17
LID LATCH - FOLD-IN-FLOOR - INSTALLATION, FLOOR CONSOLE	23-90
LID LATCH - FOLD-IN-FLOOR - REMOVAL, FLOOR CONSOLE	23-90
LIFT GEAR & LINK ROD - DESCRIPTION	8N-16
LIFT GEAR & LINK ROD - INSTALLATION	8N-17
LIFT GEAR & LINK ROD - OPERATION	8N-16
LIFT GEAR & LINK ROD - REMOVAL	8N-16
LIFTERS - DIAGNOSIS AND TESTING, HYDRAULIC	9-116
LIFTERS (CAM IN BLOCK) - DESCRIPTION, HYDRAULIC	9-116
LIFTERS (CAM IN BLOCK) - INSTALLATION, HYDRAULIC	9-117
LIFTERS (CAM IN BLOCK) - REMOVAL, HYDRAULIC	9-117
LIFTGATE - INSTALLATION	23-42
LIFTGATE - REMOVAL	23-42
LIFTGATE ADJUSTMENT, STANDARD PROCEDURE	8N-8
LIFTGATE CONTROL MODULE - DESCRIPTION, POWER	8E-10
LIFTGATE CONTROL MODULE - OPERATION, POWER	8E-10
LIFTGATE CONTROL MODULE, DIAGNOSIS AND TESTING - POWER	8E-10
LIFTGATE GLASS - INSTALLATION	23-164
LIFTGATE GLASS - REMOVAL	23-164
LIFTGATE LAMP - INSTALLATION	8L-22
LIFTGATE LAMP - REMOVAL	8L-22
LIFTGATE LEARN CYCLE, STANDARD PROCEDURE - POWER	8N-8
LIFTGATE MOTOR - DESCRIPTION	8N-15
LIFTGATE MOTOR - INSTALLATION	8N-16
LIFTGATE MOTOR - OPERATION	8N-15
LIFTGATE MOTOR - REMOVAL	8N-15
LIFTGATE SIDE - INSTALLATION	23-44
LIFTGATE SIDE - REMOVAL	23-44
LIFTGATE SILL PLATE - INSTALLATION	23-95
LIFTGATE SILL PLATE - REMOVAL	23-94
LIFTGATE SYSTEM - DESCRIPTION, POWER	8N-2
LIFTGATE SYSTEM - OPERATION, POWER	8N-2
LIFTGATE SYSTEM, DIAGNOSIS AND TESTING - POWER	8N-3
LIMITS, DESCRIPTION - HIGH AND LOW	25-9
LINE - INSTALLATION, A/C DISCHARGE	24-80
LINE - INSTALLATION, LIQUID	24-106,24-91
LINE - INSTALLATION, SUCTION	24-107,24-97
LINE - REMOVAL, A/C DISCHARGE	24-79
LINE - REMOVAL, LIQUID	24-105,24-89
LINE - REMOVAL, SUCTION	24-106,24-96
LINE EXTENSION, INSTALLATION - REAR A/C EVAPORATOR	24-100
LINE EXTENSION, REMOVAL - REAR A/C EVAPORATOR	24-99
LINE QUICK CONNECT FITTING DISASSEMBLY/ASSEMBLY - STANDARD PROCEDURE, TRANSMISSION COOLER	7-38
LINES - DESCRIPTION, OIL COOLER	9-141
LINES - DESCRIPTION, UNDERBODY	24-108
LINES - INSTALLATION, OIL COOLER	9-141
LINES - INSTALLATION, TRANSMISSION OIL COOLER	7-40
LINES - OPERATION, OIL COOLER	9-141
LINES - OPERATION, UNDERBODY	24-108
LINES - REMOVAL, OIL COOLER	9-141
LINES - REMOVAL, TRANSMISSION OIL COOLER	7-39
LINES, INSTALLATION - UNDERBODY REFRIGERANT	24-112
LINES, REMOVAL - UNDERBODY REFRIGERANT	24-110
LINES/HOSES AND CLAMPS - DESCRIPTION, FUEL	14-7
LINING - INSPECTION, REAR DRUM BRAKE SHOE	5-22
LINK - INSTALLATION, FUEL FILL DOOR BLOCKER LOCKOUT	23-54
LINK - INSTALLATION, SEAT RISER LATCH LOCKING	23-151
LINK - REMOVAL, FUEL FILL DOOR BLOCKER LOCKOUT	23-54
LINK - REMOVAL, SEAT RISER LATCH LOCKING	23-151
LINK CONNECTOR - DESCRIPTION, DATA	8E-6
LINK CONNECTOR - OPERATION, DATA	8E-6
LINK ROD - DESCRIPTION, LIFT GEAR	8N-16
LINK ROD - INSTALLATION, LIFT GEAR	8N-17
LINK ROD - OPERATION, LIFT GEAR	8N-16
LINK ROD - REMOVAL, LIFT GEAR	8N-16
LINKAGE - INSTALLATION, WIPER	8R-14
LINKAGE - REMOVAL, WIPER	8R-13
LIQUID LINE - INSTALLATION	24-106,24-91
LIQUID LINE - REMOVAL	24-105,24-89
LOCATION - DESCRIPTION, CONNECTOR/ GROUND/SPLICE	8W-91-1
LOCATIONS - DESCRIPTION, FLUID FILL/CHECK	0-7
LOCATIONS - FOLD-IN-FLOOR - SPECIFICATIONS, WELD	23-350
LOCATIONS - FOLD-IN-FLOOR ONLY - SPECIFICATIONS, BODY SEALING	23-209
LOCATIONS - FOLD-IN-FLOOR ONLY - SPECIFICATIONS, STRUCTURAL ADHESIVE	23-228
LOCATIONS - SPECIFICATIONS, BODY SEALING	23-183
LOCATIONS - SPECIFICATIONS, STRUCTURAL ADHESIVE	23-218
LOCATIONS - SPECIFICATIONS, WELD	23-234
LOCK ASSEMBLY - INSTALLATION, LATCH	23-27
LOCK ASSEMBLY - REMOVAL, LATCH	23-26
LOCK CYLINDER - INSTALLATION	23-19,23-42
LOCK CYLINDER - REMOVAL	23-19,23-42
LOCK MOTOR - INSTALLATION, SLIDING DOOR	8N-25
LOCK MOTOR - REMOVAL, SLIDING DOOR	8N-25
LOCK MOTOR, DIAGNOSIS AND TESTING - DOOR	8N-23
LOCK SWITCH - EXPORT - DESCRIPTION, DOOR CYLINDER	8N-22
LOCK SWITCH - EXPORT - OPERATION, DOOR CYLINDER	8N-22
LOCK SWITCH, DIAGNOSIS AND TESTING - DOOR	8N-23
LOCK SWITCH, EXPORT - DOOR CYLINDER	8N-22
LOCK TUMBLER - FOLD-IN-FLOOR - INSTALLATION, FLOOR CONSOLE KEY	23-90
LOCK TUMBLER - FOLD-IN-FLOOR - REMOVAL, FLOOR CONSOLE KEY	23-90
LOCKED ENGINE, STANDARD PROCEDURE - HYDROSTATIC	9-10,9-87
LOCKING LINK - INSTALLATION, SEAT RISER LATCH	23-151
LOCKING LINK - REMOVAL, SEAT RISER LATCH	23-151
LOCK/LATCH - INSTALLATION, UNDER SEAT STORAGE BIN	23-150
LOCK/LATCH - REMOVAL, UNDER SEAT STORAGE BIN	23-150
LOCKOUT LINK - INSTALLATION, FUEL FILL DOOR BLOCKER	23-54
LOCKOUT LINK - REMOVAL, FUEL FILL DOOR BLOCKER	23-54
LOCKS - DESCRIPTION, POWER	8N-20
LOCKS - OPERATION, POWER	8N-21
LOUVER - INSTALLATION, REAR HVAC	23-97
LOUVER - REMOVAL, REAR HVAC	23-96
LOW LIMITS, DESCRIPTION - HIGH	25-9
LOWER - CLEANING, INTAKE MANIFOLD	9-151
LOWER - INSPECTION, INTAKE MANIFOLD	9-151,9-62
LOWER - INSTALLATION, INTAKE MANIFOLD	9-62
LOWER - INSTALLATION, SHROUD	19-21
LOWER - REMOVAL, INTAKE MANIFOLD	9-62
LOWER - REMOVAL, SHROUD	19-21
LOWER BALL JOINT - DESCRIPTION	2-10
LOWER BALL JOINT - DIAGNOSIS AND TESTING	2-10
LOWER BALL JOINT - OPERATION	2-10
LOWER CONSOLE - INSTALLATION	23-73
LOWER CONSOLE - REMOVAL	23-73
LOWER CONTROL ARM - DESCRIPTION	2-12
LOWER CONTROL ARM - INSPECTION	2-14
LOWER CONTROL ARM - INSTALLATION	2-15
LOWER CONTROL ARM - OPERATION	2-12
LOWER CONTROL ARM - REMOVAL	2-12
LOWER CONTROL ARM (REAR BUSHING - HYDRO) - ASSEMBLY	2-15
LOWER CONTROL ARM (REAR BUSHING - HYDRO) - DISASSEMBLY	2-13
LOWER CONTROL ARM (REAR BUSHING - STANDARD) - ASSEMBLY	2-14
LOWER CONTROL ARM (REAR BUSHING - STANDARD) - DISASSEMBLY	2-13
LOWER DRIVE UNIT - DESCRIPTION	8N-53
LOWER DRIVE UNIT - INSTALLATION	8N-54
LOWER DRIVE UNIT - OPERATION	8N-53
LOWER DRIVE UNIT - REMOVAL	8N-53
LOWER DRIVE UNIT TRACK & RACK - DESCRIPTION	8N-57
LOWER DRIVE UNIT TRACK & RACK - INSTALLATION	8N-58
LOWER DRIVE UNIT TRACK & RACK - OPERATION	8N-57
LOWER DRIVE UNIT TRACK & RACK - REMOVAL	8N-57
LOWER EXTENSION TRIM - INSTALLATION, A-PILLAR	23-79
LOWER EXTENSION TRIM - REMOVAL, A-PILLAR	23-79
LOWER HINGE - INSTALLATION	23-28
LOWER HINGE - REMOVAL	23-28
LOWER INSTRUMENT PANEL - INSTALLATION	23-73
LOWER INSTRUMENT PANEL - REMOVAL	23-73
LOWER INTAKE MANIFOLD - INSTALLATION	9-151
LOWER INTAKE MANIFOLD - REMOVAL	9-150
LOWER STEERING COLUMN COVER - INSTALLATION	23-74
LOWER STEERING COLUMN COVER - REMOVAL	23-74
LOWER TRIM - INSTALLATION, B-PILLAR	23-80
LOWER TRIM - REMOVAL, B-PILLAR	23-79
LUBRICANTS - DESCRIPTION, ENGINE OIL	0-1
LUBRICATION - DESCRIPTION	9-138,9-53
LUBRICATION - OPERATION	9-138,9-53
LUBRICATION - STANDARD PROCEDURE	2-2
LUBRICATION - STANDARD PROCEDURE, CABLE END CLEANING	5-65
LUBRICATION POINTS - DESCRIPTION	0-7
LUBRICATION, SPECIFICATIONS - BODY	23-12
LUGGAGE RACK CROSSBAR - INSTALLATION	23-59
LUGGAGE RACK CROSSBAR - REMOVAL	23-58
LUGGAGE RACK RISER - INSTALLATION	23-58
LUGGAGE RACK RISER - REMOVAL	23-57
LUMBAR SUPPORT - INSTALLATION	23-150
LUMBAR SUPPORT - REMOVAL	23-150

Description	Group-Page
LWB - INSTALLATION, SEAT BELT & RETRACTOR - SECOND ROW - RIGHT OUTBOARD WITH REAR HVAC	8O-41
LWB - REMOVAL, SEAT BELT & RETRACTOR - SECOND ROW - RIGHT OUTBOARD WITH REAR HVAC	8O-41
MACHINING - STANDARD PROCEDURE, BRAKE ROTOR	5-58
MAIN BEARING FITTING - STANDARD PROCEDURE	9-125
MAIN BEARINGS - INSTALLATION, CRANKSHAFT	9-127
MAIN BEARINGS - REMOVAL, CRANKSHAFT	9-127
MANAGER - DESCRIPTION, TASK	25-25
MANAGER - OPERATION, TASK	25-25
MANIFOLD - CLEANING, EXHAUST	9-63
MANIFOLD - DESCRIPTION, INTAKE	9-147,9-60
MANIFOLD - INSPECTION, EXHAUST	9-63
MANIFOLD - INSTALLATION, EXHAUST	9-63
MANIFOLD - INSTALLATION, LOWER INTAKE	9-151
MANIFOLD - INSTALLATION, UPPER INTAKE	9-149
MANIFOLD - LEFT - CLEANING, EXHAUST	9-154
MANIFOLD - LEFT - INSPECTION, EXHAUST	9-155
MANIFOLD - LEFT - INSTALLATION, EXHAUST	9-155
MANIFOLD - LEFT - REMOVAL, EXHAUST	9-154
MANIFOLD - LOWER - CLEANING, INTAKE	9-151
MANIFOLD - LOWER - INSPECTION, INTAKE	9-151,9-62
MANIFOLD - LOWER - INSTALLATION, INTAKE	9-62
MANIFOLD - LOWER - REMOVAL, INTAKE	9-62
MANIFOLD - REMOVAL, EXHAUST	9-63
MANIFOLD - REMOVAL, LOWER INTAKE	9-150
MANIFOLD - REMOVAL, UPPER INTAKE	9-148
MANIFOLD - RIGHT - CLEANING, EXHAUST	9-153
MANIFOLD - RIGHT - INSPECTION, EXHAUST	9-153
MANIFOLD - RIGHT - INSTALLATION, EXHAUST	9-153
MANIFOLD - RIGHT - REMOVAL, EXHAUST	9-152
MANIFOLD - UPPER - INSPECTION, INTAKE	9-61
MANIFOLD - UPPER - INSTALLATION, INTAKE	9-61
MANIFOLD - UPPER - REMOVAL, INTAKE	9-60
MANIFOLD LEAKS - DIAGNOSIS AND TESTING, INTAKE	9-147,9-60
MANIFOLD STRIPPED THREAD REPAIR - STANDARD PROCEDURE	9-147
MANIFOLD VACUUM PORT REPAIR - STANDARD PROCEDURE, INTAKE	9-148
MANUAL - INSTALLATION, WINDOW REGULATOR	23-23
MANUAL - OCS - INSTALLATION, FRONT SEAT RISER	23-123
MANUAL - OCS - REMOVAL, FRONT SEAT RISER	23-123
MANUAL - REMOVAL, WINDOW REGULATOR	23-22
MANUAL ADJUSTER - INSTALLATION, FRONT SEAT TRACK	23-126
MANUAL ADJUSTER - REMOVAL, FRONT SEAT TRACK	23-125
MANUAL DUAL ZONE, DESCRIPTION	24-2
MANUAL DUAL ZONE, OPERATION	24-5
MANUAL SINGLE ZONE, DESCRIPTION	24-2
MANUAL SINGLE ZONE, OPERATION	24-4
MANUAL TEMPERATURE CONTROL SYSTEM, OPERATION	24-113
MANUAL THREE ZONE, DESCRIPTION	24-2
MANUAL THREE ZONE, OPERATION	24-5
MAP SENSOR - DESCRIPTION	14-34
MAP SENSOR - OPERATION	14-34
MASTER CYLINDER BLEEDING - STANDARD PROCEDURE	5-36
MASTER CYLINDER (FLUID RESERVOIR) - ASSEMBLY	5-39
MASTER CYLINDER (FLUID RESERVOIR) - DISASSEMBLY	5-38
MATCH MOUNTING - STANDARD PROCEDURE, TIRE AND WHEEL	22-7
MATS - INSTALLATION, CARPETS AND FLOOR	23-81
MATS - REMOVAL, CARPETS AND FLOOR	23-81
MEASUREMENT - STANDARD PROCEDURE, CURB HEIGHT	2-55
MEASUREMENT AND ADJUSTMENT, ADJUSTMENTS - DIFFERENTIAL BEARING PRELOAD	21-79
MEASUREMENTS - SPECIFICATIONS, GAP AND FLUSH	23-177
MEASURING BEARING CLEARANCE USING PLASTIGAGE - STANDARD PROCEDURE	9-12,9-86
MEASURING CAMSHAFT END PLAY - STANDARD PROCEDURE	9-29
MEASURING CONNECTING ROD BEARING CLEARANCE - STANDARD PROCEDURE	9-123
MEASURING CRANKSHAFT END PLAY - STANDARD PROCEDURE	9-128
MEASURING TIMING CHAIN WEAR - STANDARD PROCEDURE	9-155
MECHANICAL - DIAGNOSIS AND TESTING, ENGINE DIAGNOSIS	9-6,9-82
MECHANISM -SECOND ROW -FOLD-IN-FLOOR - INSTALLATION, SEAT RECLINER/FORWARD FOLDING	23-137
MECHANISM -SECOND ROW -FOLD-IN-FLOOR - REMOVAL, SEAT RECLINER/ FORWARD FOLDING	23-137
MECHANISM -THIRD ROW -FOLD-IN-FLOOR - INSTALLATION, SEAT RECLINER/FOLD FORWARD	23-160
MECHANISM -THIRD ROW -FOLD-IN-FLOOR - REMOVAL, SEAT RECLINER/ FOLD FORWARD	23-160
MEMORIES, OPERATION - FUEL CORRECTION OR ADAPTIVE	14-24
MEMORY SEAT/MIRROR MODULE - DESCRIPTION	8E-9
MEMORY SEAT/MIRROR MODULE - OPERATION	8E-9
MEMORY SEAT/MIRROR MODULE, DIAGNOSIS AND TESTING	8E-9
MEMORY SWITCH - DESCRIPTION	8N-36
MEMORY SWITCH - OPERATION	8N-36
MEMORY SWITCH, DIAGNOSIS AND TESTING	8N-37
MEMORY SYSTEM, DESCRIPTION	8N-32
MEMORY SYSTEM, DIAGNOSIS AND TESTING	8N-33
MEMORY SYSTEM, OPERATION	8N-33
MESSAGE CENTER - INSTALLATION	8M-1
MESSAGE CENTER - REMOVAL	8M-1
MICRO 420 BATTERY TESTER, STANDARD PROCEDURE	8F-15
MINI-TRIP COMPUTER, DIAGNOSIS AND TESTING - COMPASS	8M-10
MIRROR - DESCRIPTION, AUTOMATIC DAY / NIGHT	8N-28
MIRROR - INSTALLATION, GLASS-OUTSIDE REARVIEW	23-61
MIRROR - INSTALLATION, REAR VIEW	23-97
MIRROR - INSTALLATION, SIDE VIEW	23-60
MIRROR - OPERATION, AUTOMATIC DAY / NIGHT	8N-28
MIRROR - REMOVAL, GLASS-OUTSIDE REARVIEW	23-61
MIRROR - REMOVAL, REAR VIEW	23-97
MIRROR - REMOVAL, SIDE VIEW	23-60
MIRROR - REMOVAL, SIDEVIEW	8N-30
MIRROR, DIAGNOSIS AND TESTING - AUTOMATIC DAY / NIGHT	8N-28
MIRROR SWITCH - EXPORT - DESCRIPTION, POWER FOLDAWAY	8N-29
MIRROR SWITCH - EXPORT - INSTALLATION, POWER FOLDAWAY	8N-30
MIRROR SWITCH - EXPORT - OPERATION, POWER FOLDAWAY	8N-29
MIRROR SWITCH - EXPORT - REMOVAL, POWER FOLDAWAY	8N-29
MIRRORS - DESCRIPTION, HEATED	8G-6
MIRRORS - DESCRIPTION, POWER	8N-26
MIRRORS - OPERATION, HEATED	8G-6
MIRRORS - OPERATION, POWER	8N-26
MIRRORS, DIAGNOSIS AND TESTING - POWER	8N-27
MODE DOOR ACTUATOR - DESCRIPTION	24-29
MODE DOOR ACTUATOR - INSTALLATION	24-30
MODE DOOR ACTUATOR - OPERATION	24-29
MODE DOOR ACTUATOR - REAR - DESCRIPTION	24-39
MODE DOOR ACTUATOR - REAR - INSTALLATION	24-40
MODE DOOR ACTUATOR - REAR - OPERATION	24-39
MODE DOOR ACTUATOR - REAR - REMOVAL	24-39
MODE DOOR ACTUATOR - REMOVAL	24-29
MODE, OPERATION - DRB III® STATE DISPLAY TEST	25-10
MODELS, INSTALLATION - RG	24-27
MODELS, INSTALLATION - RS	24-28
MODELS, REMOVAL - RG	24-27
MODELS, REMOVAL - RS	24-27
MODES OF OPERATION - OPERATION	14-22
MODULE - BLOWER MOTOR - DESCRIPTION, POWER	24-30
MODULE - BLOWER MOTOR - INSTALLATION, POWER	24-31
MODULE - BLOWER MOTOR - OPERATION, POWER	24-30
MODULE - BLOWER MOTOR - REMOVAL, POWER	24-30
MODULE - DESCRIPTION, BODY CONTROL	8E-2
MODULE - DESCRIPTION, FRONT CONTROL	8E-7
MODULE - DESCRIPTION, FUEL PUMP	14-8
MODULE - DESCRIPTION, HEATED SEAT	8E-8
MODULE - DESCRIPTION, INTEGRATED POWER	8W-97-1
MODULE - DESCRIPTION, MEMORY SEAT/MIRROR	8E-9
MODULE - DESCRIPTION, OCCUPANT CLASSIFICATION	8O-25
MODULE - DESCRIPTION, PARK ASSIST	8B-4
MODULE - DESCRIPTION, POWER LIFTGATE CONTROL	8E-10
MODULE - DESCRIPTION, SENTRY KEY REMOTE ENTRY	8Q-3
MODULE - DESCRIPTION, SLIDING DOOR CONTROL	8E-18
MODULE - DIAGNOSIS AND TESTING, SENTRY KEY REMOTE ENTRY	8Q-5
MODULE - EXPORT - DESCRIPTION, ANTENNA	8A-10
MODULE - EXPORT - OPERATION, ANTENNA	8A-10
MODULE - INSTALLATION, BODY CONTROL	8E-4
MODULE - INSTALLATION, HANDS FREE	8T-3
MODULE - INSTALLATION, INTEGRATED POWER	8W-97-2
MODULE - INSTALLATION, OCCUPANT CLASSIFICATION	8O-26
MODULE - INSTALLATION, PARK ASSIST	8B-6
MODULE - INSTALLATION, SENTRY KEY REMOTE ENTRY	8Q-6
MODULE - INSTALLATION, WIPER	8R-14
MODULE - OPERATION, BODY CONTROL	8E-3
MODULE - OPERATION, FRONT CONTROL	8E-7
MODULE - OPERATION, FUEL PUMP	14-9
MODULE - OPERATION, HEATED SEAT	8E-8
MODULE - OPERATION, INTEGRATED POWER	8W-97-2
MODULE - OPERATION, MEMORY SEAT/MIRROR	8E-9
MODULE - OPERATION, OCCUPANT CLASSIFICATION	8O-25
MODULE - OPERATION, PARK ASSIST	8B-5
MODULE - OPERATION, POWER LIFTGATE CONTROL	8E-10
MODULE - OPERATION, SENTRY KEY REMOTE ENTRY	8Q-4
MODULE - OPERATION, SLIDING DOOR CONTROL	8E-18
MODULE - REAR BLOWER MOTOR - DESCRIPTION, POWER	24-40

Description	Group-Page
MODULE - REAR BLOWER MOTOR - INSTALLATION, POWER	24-41
MODULE - REAR BLOWER MOTOR - OPERATION, POWER	24-40
MODULE - REAR BLOWER MOTOR - REMOVAL, POWER	24-41
MODULE - REMOVAL, BODY CONTROL	8E-4
MODULE - REMOVAL, HANDS FREE	8T-3
MODULE - REMOVAL, INTEGRATED POWER	8W-97-2
MODULE - REMOVAL, OCCUPANT CLASSIFICATION	8O-26
MODULE - REMOVAL, PARK ASSIST	8B-5
MODULE - REMOVAL, SENTRY KEY REMOTE ENTRY	8Q-6
MODULE - REMOVAL, WIPER	8R-14
MODULE, BENCH SEAT - REMOVAL, CHILD SEAT	23-104
MODULE, DIAGNOSIS AND TESTING - FRONT CONTROL	8E-7
MODULE, DIAGNOSIS AND TESTING - HEATED SEAT	8E-9
MODULE, DIAGNOSIS AND TESTING - MEMORY SEAT/MIRROR	8E-9
MODULE, DIAGNOSIS AND TESTING - POWER LIFTGATE CONTROL	8E-10
MODULE, DIAGNOSIS AND TESTING - SLIDING DOOR CONTROL	8E-18
MODULE, EXPORT - ANTENNA	8A-10
MODULE FLUIDS - DESCRIPTION, AWD REAR DRIVELINE	0-6
MOLDING - INSTALLATION, FRONT DOOR INNER BELT	23-168
MOLDING - INSTALLATION, FRONT DOOR OUTER BELT	23-167
MOLDING - INSTALLATION, ROOF JOINT	23-60
MOLDING - REMOVAL, FRONT DOOR INNER BELT	23-168
MOLDING - REMOVAL, FRONT DOOR OUTER BELT	23-167
MOLDING - REMOVAL, ROOF JOINT	23-60
MOLDINGS - INSTALLATION, BODY SIDE	23-46
MOLDINGS - REMOVAL, BODY SIDE	23-45
MONITORED COMPONENT - DESCRIPTION	25-1
MONITORED SYSTEMS - DESCRIPTION	25-6
MONITORING - DESCRIPTION, TIRE PRESSURE	22-9
MONITORING - OPERATION, TIRE PRESSURE	22-10
MOTOR - DESCRIPTION, BLOWER	24-45,24-57
MOTOR - DESCRIPTION, IDLE AIR CONTROL	14-33
MOTOR - DESCRIPTION, LIFTGATE	8N-15
MOTOR - DESCRIPTION, POWER MODULE - BLOWER	24-30
MOTOR - DESCRIPTION, POWER MODULE - REAR BLOWER	24-40
MOTOR - DESCRIPTION, SLIDING DOOR	8N-51
MOTOR - DIAGNOSIS AND TESTING, RADIATOR FAN	7-30
MOTOR - INSTALLATION, FRONT WIPER	8R-10
MOTOR - INSTALLATION, IDLE AIR CONTROL	14-33
MOTOR - INSTALLATION, LIFTGATE	8N-16
MOTOR - INSTALLATION, POWER MODULE - BLOWER	24-31
MOTOR - INSTALLATION, POWER MODULE - REAR BLOWER	24-41
MOTOR - INSTALLATION, REAR WIPER	8R-10
MOTOR - INSTALLATION, SLIDING DOOR	8N-51
MOTOR - INSTALLATION, SLIDING DOOR LOCK	8N-25
MOTOR - INSTALLATION, SUNROOF	23-174
MOTOR - INSTALLATION, WASHER PUMP	8R-12
MOTOR - OPERATION, BLOWER	24-45,24-57
MOTOR - OPERATION, IDLE AIR CONTROL	14-33
MOTOR - OPERATION, LIFTGATE	8N-15
MOTOR - OPERATION, POWER MODULE - BLOWER	24-30
MOTOR - OPERATION, POWER MODULE - REAR BLOWER	24-40
MOTOR - OPERATION, SLIDING DOOR	8N-51
MOTOR - REMOVAL, FRONT WIPER	8R-9
MOTOR - REMOVAL, IDLE AIR CONTROL	14-33
MOTOR - REMOVAL, LIFTGATE	8N-15
MOTOR - REMOVAL, POWER MODULE - BLOWER	24-30
MOTOR - REMOVAL, POWER MODULE - REAR BLOWER	24-41
MOTOR - REMOVAL, REAR WIPER	8R-10
MOTOR - REMOVAL, SLIDING DOOR	8N-51
MOTOR - REMOVAL, SLIDING DOOR LOCK	8N-25
MOTOR - REMOVAL, SUNROOF	23-174
MOTOR - REMOVAL, WASHER PUMP	8R-12
MOTOR - REMOVAL, WINDOW	8N-62
MOTOR, DIAGNOSIS AND TESTING - DOOR LOCK	8N-23
MOTOR, DIAGNOSIS AND TESTING - FRONT BLOWER	24-46
MOTOR, DIAGNOSIS AND TESTING - REAR BLOWER	24-58
MOTOR, DIAGNOSIS AND TESTING - VENT WINDOW	8N-62
MOTOR RELAY - DESCRIPTION, BLOWER	24-23,24-36
MOTOR RELAY - INSTALLATION, BLOWER	24-24,24-37
MOTOR RELAY - OPERATION, BLOWER	24-23, 24-36
MOTOR RELAY - REMOVAL, BLOWER	24-24, 24-37
MOTOR RESISTOR BLOCK - DESCRIPTION, BLOWER	24-24,24-37
MOTOR RESISTOR BLOCK - OPERATION, BLOWER	24-24,24-37
MOTOR RESISTOR BLOCK, DIAGNOSIS AND TESTING - FRONT BLOWER	24-25
MOTOR RESISTOR BLOCK, DIAGNOSIS AND TESTING - REAR BLOWER	24-38
MOUNT - INSTALLATION, FRONT	9-134,9-50
MOUNT - INSTALLATION, LEFT	9-136,9-50
MOUNT - INSTALLATION, REAR	9-137,9-52
MOUNT - INSTALLATION, RIGHT	9-138,9-52
MOUNT - REMOVAL, FRONT	9-134,9-50
MOUNT - REMOVAL, LEFT	9-136,9-50
MOUNT - REMOVAL, REAR	9-136,9-51
MOUNT - REMOVAL, RIGHT	9-138,9-52
MOUNT BUSHINGS - INSTALLATION, FRONT CROSSMEMBER	13-17
MOUNT BUSHINGS - REMOVAL, FRONT CROSSMEMBER	13-17
MOUNTED STOP LAMP - INSTALLATION, CENTER HIGH	8L-6
MOUNTED STOP LAMP - REMOVAL, CENTER HIGH	8L-6
MOUNTED STOP LAMP UNIT - INSTALLATION, CENTER HIGH	8L-6
MOUNTED STOP LAMP UNIT - REMOVAL, CENTER HIGH	8L-6
MOUNTING - DESCRIPTION, ENGINE	9-134,9-50
MOUNTING - STANDARD PROCEDURE, TIRE AND WHEEL MATCH	22-7
MOUNTING BRACKET, 2.4L ENGINE - A/C COMPRESSOR	24-74,24-75
MOUNTING STUDS - FRONT - INSTALLATION, WHEEL	22-21
MOUNTING STUDS - FRONT - REMOVAL, WHEEL	22-21
MOUNTING STUDS - REAR - INSTALLATION, WHEEL	22-22
MOUNTING STUDS - REAR - REMOVAL, WHEEL	22-22
MOUNTS - FRONT - INSTALLATION, SPRING	2-43
MOUNTS - FRONT - REMOVAL, SPRING	2-42
MOUNTS - REAR - INSTALLATION, SPRING	2-43
MOUNTS - REAR - REMOVAL, SPRING	2-43
MUFFLER - INSTALLATION	11-8
MUFFLER - REMOVAL	11-7
MULTI-FUNCTION SWITCH - DIAGNOSIS AND TESTING	8L-18
MULTI-FUNCTION SWITCH - INSTALLATION	8L-18
MULTI-FUNCTION SWITCH - REMOVAL	8L-18
NAME PLATES - ADHESIVE ATTACHED - INSTALLATION, EXTERIOR	23-51
NAME PLATES - ADHESIVE ATTACHED - REMOVAL, EXTERIOR	23-51
NAME PLATES - TAPE ATTACHED - INSTALLATION, EXTERIOR	23-51
NAME PLATES - TAPE ATTACHED - REMOVAL, EXTERIOR	23-51
NATURAL VAC LEAK DETECTION ASSY - INSTALLATION	25-14
NATURAL VAC LEAK DETECTION ASSY - REMOVAL	25-14
NAVIGATION RADIO - INSTALLATION, ANTENNA	8A-11
NAVIGATION RADIO - REMOVAL, ANTENNA	8A-11
NAVIGATION/TELECOMMUNICATION - DESCRIPTION	8T-1
NAVIGATION/TELECOMMUNICATION - OPERATION	8T-1
NECK SEAL - DIAGNOSIS AND TESTING, RADIATOR CAP TO FILLER	7-28
NGC CONTROLLER - REMOVAL	8E-16
NIGHT MIRROR - DESCRIPTION, AUTOMATIC DAY	8N-28
NIGHT MIRROR - OPERATION, AUTOMATIC DAY	8N-28
NIGHT MIRROR, DIAGNOSIS AND TESTING - AUTOMATIC DAY	8N-28
NO CUP HOLDER - INSTALLATION, QUAD BUCKET SEAT SIDE SHIELD	23-143
NO CUP HOLDER - REMOVAL, QUAD BUCKET SEAT SIDE SHIELD	23-143
NOISE - DIAGNOSIS AND TESTING, EXCESSIVE EXHAUST SYSTEM	11-2
NOISE - DIAGNOSIS AND TESTING, TIRE	22-14
NOISE DIAGNOSIS - DIAGNOSIS AND TESTING, HYDRAULIC LASH ADJUSTER	9-34
NOISE, DIAGNOSIS AND TESTING - WIND	23-2
NOISE DIAGNOSIS, DIAGNOSIS AND TESTING - A/C COMPRESSOR	24-72
NOISE SUPPRESSION COMPONENTS - DESCRIPTION, RADIO	8A-15
NOISE SUPPRESSION COMPONENTS - OPERATION, RADIO	8A-15
NON-ABS JUNCTION BLOCK - DESCRIPTION	5-33
NON-ABS JUNCTION BLOCK - INSTALLATION	5-34
NON-ABS JUNCTION BLOCK - OPERATION	5-33
NON-ABS JUNCTION BLOCK - REMOVAL	5-34
NON-MONITORED CIRCUITS, DESCRIPTION	25-5
NOT FILL - DIAGNOSIS AND TESTING, VEHICLE DOES	25-17
NVLD - FOLD-IN-FLOOR - INSTALLATION, WITH	25-20
NVLD - FOLD-IN-FLOOR - REMOVAL, WITH	25-20
O2 SENSOR - DESCRIPTION	14-36
O2 SENSOR - OPERATION	14-36
OBTAINING DIAGNOSTIC TROUBLE CODES - STANDARD PROCEDURE	8E-15
OCCUPANT CLASSIFICATION MODULE - DESCRIPTION	8O-25
OCCUPANT CLASSIFICATION MODULE - INSTALLATION	8O-26
OCCUPANT CLASSIFICATION MODULE - OPERATION	8O-25
OCCUPANT CLASSIFICATION MODULE - REMOVAL	8O-26
OCCUPANT RESTRAINT CONTROLLER - DESCRIPTION	8O-27
OCCUPANT RESTRAINT CONTROLLER - INSTALLATION	8O-29
OCCUPANT RESTRAINT CONTROLLER - OPERATION	8O-28
OCCUPANT RESTRAINT CONTROLLER - REMOVAL	8O-29
OCS - INSTALLATION, FRONT SEAT CUSHION	23-120
OCS - INSTALLATION, FRONT SEAT CUSHION SIDE COVER	23-122
OCS - INSTALLATION, FRONT SEAT RISER - MANUAL	23-123
OCS - INSTALLATION, FRONT SEAT TRACK ADJUSTER/MANUAL	23-128
OCS - INSTALLATION, FRONT SEAT TRACK ADJUSTER/POWER	23-125
OCS - INSTALLATION, FRONT SEAT TRACK REAR COVER	23-129

Description	Group-Page
OCS - REMOVAL, FRONT SEAT CUSHION	23-119
OCS - REMOVAL, FRONT SEAT CUSHION SIDE COVER	23-121
OCS - REMOVAL, FRONT SEAT RISER - MANUAL	23-123
OCS - REMOVAL, FRONT SEAT TRACK ADJUSTER/MANUAL	23-126
OCS - REMOVAL, FRONT SEAT TRACK ADJUSTER/POWER	23-124
OCS - REMOVAL, FRONT SEAT TRACK REAR COVER	23-129
OIL - DESCRIPTION, FLEXIBLE FUEL ENGINE	0-3
OIL - DESCRIPTION, REFRIGERANT	24-94
OIL - DIESEL ENGINES - DESCRIPTION, ENGINE	0-6
OIL - OPERATION, REFRIGERANT	24-94
OIL AND FILTER CHANGE - STANDARD PROCEDURE, ENGINE	9-139,9-54
OIL AND LUBRICANTS - DESCRIPTION, ENGINE	0-1
OIL COOLER - DESCRIPTION, TRANSMISSION	7-39
OIL COOLER - INSPECTION, TRANSMISSION	7-39
OIL COOLER & LINES - DESCRIPTION	9-141
OIL COOLER & LINES - INSTALLATION	9-141
OIL COOLER & LINES - OPERATION	9-141
OIL COOLER & LINES - REMOVAL	9-141
OIL COOLER LINES - INSTALLATION, TRANSMISSION	7-40
OIL COOLER LINES - REMOVAL, TRANSMISSION	7-39
OIL FILTER - DESCRIPTION	9-54
OIL FILTER - INSTALLATION	9-141,9-54
OIL FILTER - REMOVAL	9-141,9-54
OIL FILTER ADAPTER - INSTALLATION	9-142
OIL FILTER ADAPTER - REMOVAL	9-142
OIL GALLERY PLUGS - STANDARD PROCEDURE, ENGINE CORE	9-10,9-88
OIL LEAK INSPECTION - DIAGNOSIS AND TESTING, ENGINE	9-8,9-84
OIL LEVEL CHECK - STANDARD PROCEDURE, ENGINE	9-140
OIL LEVEL CHECK, STANDARD PROCEDURE - ENGINE	9-54
OIL LEVEL, STANDARD PROCEDURE - REFRIGERANT	24-94
OIL PAN - CLEANING	9-142
OIL PAN - INSPECTION	9-143
OIL PAN - INSTALLATION	9-143,9-55
OIL PAN - REMOVAL	9-142,9-55
OIL PRESSURE - DIAGNOSIS AND TESTING, CHECKING ENGINE	9-53
OIL PRESSURE - DIAGNOSIS AND TESTING, ENGINE	9-138
OIL PRESSURE RELIEF VALVE - INSTALLATION	9-144
OIL PRESSURE RELIEF VALVE - REMOVAL	9-143
OIL PRESSURE SWITCH - DESCRIPTION	9-144
OIL PRESSURE SWITCH - INSTALLATION	9-144, 9-56
OIL PRESSURE SWITCH - OPERATION	9-144
OIL PRESSURE SWITCH - REMOVAL	9-144,9-56
OIL PUMP - ASSEMBLY	9-146,9-58
OIL PUMP - ASSEMBLY	21-112,21-263
OIL PUMP - CLEANING	9-145,9-57
OIL PUMP - DESCRIPTION	9-144
OIL PUMP - DESCRIPTION	21-110,21-261
OIL PUMP - DISASSEMBLY	9-145,9-57
OIL PUMP - DISASSEMBLY	21-110,21-261
OIL PUMP - INSPECTION	9-145,9-58
OIL PUMP - INSTALLATION	9-146,9-59
OIL PUMP - INSTALLATION, SEAL	21-113, 21-264
OIL PUMP - OPERATION	21-110,21-261
OIL PUMP - REMOVAL	9-144,9-56
OIL PUMP - REMOVAL, SEAL	21-113,21-264
OIL SEAL - FRONT - INSTALLATION, CRANKSHAFT	9-130,9-42
OIL SEAL - FRONT - REMOVAL, CRANKSHAFT	9-130,9-41
OIL SEAL - REAR - INSTALLATION, CRANKSHAFT	9-131,9-42
OIL SEAL - REAR - REMOVAL, CRANKSHAFT	9-131,9-42
OIL SEAL RETAINER - INSTALLATION, CRANKSHAFT REAR	9-132
OIL SEAL RETAINER - REMOVAL, CRANKSHAFT REAR	9-132
OIL SEAL(S) - INSTALLATION, CAMSHAFT	9-29
OIL SEAL(S) - REMOVAL, CAMSHAFT	9-28
ON-BOARD DIAGNOSTIC SYSTEM, DIAGNOSIS AND TESTING	8F-22
ONLY - SPECIFICATIONS, BODY SEALING LOCATIONS - FOLD-IN-FLOOR	23-209
ONLY - SPECIFICATIONS, FRAME DIMENSIONS - FOLD-IN-FLOOR SEATS	13-11
ONLY - SPECIFICATIONS, STRUCTURAL ADHESIVE LOCATIONS - FOLD-IN-FLOOR	23-228
OPEN LATCH - INSTALLATION, HOLD	23-25
OPEN LATCH - REMOVAL, HOLD	23-25
OPEN LATCH CABLE - INSTALLATION, HOLD	23-38
OPEN LATCH CABLE - REMOVAL, HOLD	23-38
OPEN LATCH STRIKER - INSTALLATION, HOLD	23-26
OPEN LATCH STRIKER - REMOVAL, HOLD	23-26
OPEN SWITCH - DESCRIPTION, FULL	8N-11, 8N-52
OPEN SWITCH - INSTALLATION, FULL	8N-11
OPEN SWITCH - OPERATION, FULL	8N-11,8N-52
OPEN SWITCH - REMOVAL, FULL	8N-11
OPEN-CIRCUIT VOLTAGE TEST, STANDARD PROCEDURE	8F-13
OPENING DIMENSIONS - SPECIFICATIONS, BODY	23-180
ORVR - OPERATION	25-15
OUTER BELT MOLDING - INSTALLATION, FRONT DOOR	23-167
OUTER BELT MOLDING - REMOVAL, FRONT DOOR	23-167
OUTER TIE ROD - INSTALLATION	19-35
OUTER TIE ROD - REMOVAL	19-34
OUTLET - DESCRIPTION, POWER	8W-97-3
OUTLET - DIAGNOSIS & TESTING, POWER	8W-97-3
OUTLET - OPERATION, POWER	8W-97-3
OUTLETS - DESCRIPTION, AIR	24-43,24-56
OUTLETS - INSTALLATION, AIR	24-56
OUTLETS - REMOVAL, AIR	24-56
OUTLETS, INSTALLATION - FRONT CENTER BEZEL	24-45
OUTLETS, INSTALLATION - FRONT DEMISTER	24-45
OUTLETS, INSTALLATION - INSTRUMENT PANEL	24-45
OUTLETS, REMOVAL - FRONT CENTER BEZEL	24-44
OUTLETS, REMOVAL - FRONT DEMISTER	24-44
OUTLETS, REMOVAL - INSTRUMENT PANEL	24-45
OUTPUT - DESCRIPTION, SPEED SENSOR	21-122,21-273
OUTPUT - INSTALLATION, SPEED SENSOR	21-123,21-274
OUTPUT - OPERATION, 5 VOLT SUPPLY - PCM	8E-15
OUTPUT - OPERATION, SPEED SENSOR	21-122, 21-273
OUTPUT - REMOVAL, SPEED SENSOR	21-123, 21-274
OUTSIDE HANDLE - INSTALLATION	23-36
OUTSIDE HANDLE - REMOVAL	23-35
OUTSIDE HANDLE CABLE - INSTALLATION	23-37
OUTSIDE HANDLE CABLE - REMOVAL	23-37
OVER STEERING COLUMN COVER - INSTALLATION	23-76
OVER STEERING COLUMN COVER - REMOVAL	23-76
OVERHEAD CONSOLE - DESCRIPTION	8M-2
OVERHEAD CONSOLE, DIAGNOSIS AND TESTING	8M-3
OVERHEAD CONSOLE, SPECIAL TOOLS	8M-7
PAD - INSTALLATION, REAR FASCIA - SCUFF	13-5
PAD - REMOVAL, REAR FASCIA - SCUFF	13-5
PAD ASSEMBLY - INSTALLATION, INSTRUMENT PANEL TOP	23-77
PAD ASSEMBLY - REMOVAL, INSTRUMENT PANEL TOP	23-77
PAINT CODE - DESCRIPTION	23-101
PAINTED TOUCH-UP - DESCRIPTION	23-101
PAN - CLEANING, OIL	9-142
PAN - INSPECTION, OIL	9-143
PAN - INSTALLATION, OIL	9-143,9-55
PAN - REMOVAL, OIL	9-142,9-55
PAN PANEL-THIRD ROW - FOLD-IN-FLOOR - INSTALLATION, BOTTOM OF SEAT CUSHION	23-152
PAN PANEL-THIRD ROW - FOLD-IN-FLOOR - REMOVAL, BOTTOM OF SEAT CUSHION	23-152
PANEL - INSTALLATION, BENCH SEAT BACK	23-144
PANEL - INSTALLATION, FRONT SEAT BACK	23-113
PANEL - INSTALLATION, GLASS	23-173
PANEL - INSTALLATION, LEFT D-PILLAR TRIM	23-94
PANEL - INSTALLATION, LEFT QUARTER TRIM	23-94
PANEL - INSTALLATION, LOWER INSTRUMENT	23-73
PANEL - INSTALLATION, RIGHT D-PILLAR TRIM	23-98
PANEL - INSTALLATION, RIGHT QUARTER TRIM	23-97
PANEL - INSTALLATION, TRIM	23-20,23-34, 23-43
PANEL - REMOVAL, BENCH SEAT BACK	23-143
PANEL - REMOVAL, FRONT SEAT BACK	23-112
PANEL - REMOVAL, GLASS	23-173
PANEL - REMOVAL, LEFT D-PILLAR TRIM	23-94
PANEL - REMOVAL, LEFT QUARTER TRIM	23-94
PANEL - REMOVAL, LOWER INSTRUMENT	23-73
PANEL - REMOVAL, RIGHT D-PILLAR TRIM	23-97
PANEL - REMOVAL, RIGHT QUARTER TRIM	23-97
PANEL - REMOVAL, TRIM	23-20,23-34,23-43
PANEL - SECOND ROW -FOLD-IN-FLOOR - INSTALLATION, SEAT BACK	23-134
PANEL - SECOND ROW -FOLD-IN-FLOOR - REMOVAL, SEAT BACK	23-134
PANEL - THIRD ROW -FOLD-IN-FLOOR - INSTALLATION, SEAT BACK	23-158
PANEL - THIRD ROW -FOLD-IN-FLOOR - REMOVAL, SEAT BACK	23-158
PANEL ADJUSTMENT, ADJUSTMENTS - SUNROOF GLASS	23-173
PANEL ANTENNA CABLE - INSTALLATION, INSTRUMENT	8A-12
PANEL ANTENNA CABLE - REMOVAL, INSTRUMENT	8A-12
PANEL ASSEMBLY - INSTALLATION, INSTRUMENT	23-70
PANEL ASSEMBLY - REMOVAL, INSTRUMENT	23-67
PANEL CENTER BEZEL - INSTALLATION, INSTRUMENT	23-72
PANEL CENTER BEZEL - REMOVAL, INSTRUMENT	23-71
PANEL DEMISTER DUCTS - INSTALLATION, INSTRUMENT	24-54
PANEL DEMISTER DUCTS - REMOVAL, INSTRUMENT	24-54
PANEL DUCTS - INSTALLATION, INSTRUMENT	24-55
PANEL DUCTS - REMOVAL, INSTRUMENT	24-55
PANEL OUTLETS, INSTALLATION - INSTRUMENT	24-45
PANEL OUTLETS, REMOVAL - INSTRUMENT	24-45
PANEL REPAIR - STANDARD PROCEDURE, PLASTIC BODY	23-3
PANEL RIGHT END CAP - INSTALLATION, INSTRUMENT	23-72
PANEL RIGHT END CAP - REMOVAL, INSTRUMENT	23-72
PANEL TOP COVER - INSTALLATION, INSTRUMENT	23-72

Description	Group-Page
PANEL TOP COVER - REMOVAL, INSTRUMENT	23-72
PANEL TOP PAD ASSEMBLY - INSTALLATION, INSTRUMENT	23-77
PANEL TOP PAD ASSEMBLY - REMOVAL, INSTRUMENT	23-77
PANEL/FENDER AIR EXHAUSTER - DESCRIPTION, REAR QUARTER	23-59
PANEL/FENDER AIR EXHAUSTER - INSTALLATION, REAR QUARTER	23-60
PANEL/FENDER AIR EXHAUSTER - REMOVAL, REAR QUARTER	23-59
PANEL-THIRD ROW - FOLD-IN-FLOOR - INSTALLATION, BOTTOM OF SEAT CUSHION PAN	23-152
PANEL-THIRD ROW - FOLD-IN-FLOOR - REMOVAL, BOTTOM OF SEAT CUSHION PAN	23-152
PARK ASSIST DISPLAY - DESCRIPTION	8B-3
PARK ASSIST DISPLAY - INSTALLATION	8B-4
PARK ASSIST DISPLAY - OPERATION	8B-3
PARK ASSIST DISPLAY - REMOVAL	8B-4
PARK ASSIST MODULE - DESCRIPTION	8B-4
PARK ASSIST MODULE - INSTALLATION	8B-6
PARK ASSIST MODULE - OPERATION	8B-5
PARK ASSIST MODULE - REMOVAL	8B-5
PARK ASSIST SENSOR - DESCRIPTION	8B-6
PARK ASSIST SENSOR - INSTALLATION	8B-6
PARK ASSIST SENSOR - OPERATION	8B-6
PARK ASSIST SENSOR - REMOVAL	8B-6
PARK SWITCH - DIAGNOSIS AND TESTING, FAILED	8R-2
PARKING BRAKE - INSTALLATION, LEVER	5-76
PARKING BRAKE - INSTALLATION, SHOES	5-84
PARKING BRAKE - REMOVAL, LEVER	5-75
PARKING BRAKE - REMOVAL, SHOES	5-78
PARKING BRAKE AUTOMATIC ADJUSTER TENSION RELEASE - STANDARD PROCEDURE	5-63
PARKING BRAKE AUTOMATIC ADJUSTER TENSION RESET - STANDARD PROCEDURE	5-64
PARKING BRAKE CABLES - ADJUSTMENT	5-65
PARKING BRAKE INTERMEDIATE - INSTALLATION, CABLE	5-69
PARKING BRAKE INTERMEDIATE - REMOVAL, CABLE	5-69
PARKING BRAKE LEVER AND FRONT CABLE - INSTALLATION	5-77
PARKING BRAKE LEVER AND FRONT CABLE - REMOVAL	5-77
PARKING BRAKE SHOES - ADJUSTMENT	5-85
PARK/TURN SIGNAL LAMP - INSTALLATION	8L-18
PARK/TURN SIGNAL LAMP - REMOVAL	8L-18
PARTS - DESCRIPTION, FFV REPLACEMENT	14-2
PASSENGER AIRBAG - DESCRIPTION	8O-30
PASSENGER AIRBAG - INSTALLATION	8O-32
PASSENGER AIRBAG - OPERATION	8O-30
PASSENGER AIRBAG - REMOVAL	8O-30
PASSENGER AIRBAG DISABLED INDICATOR - DESCRIPTION	8O-33
PASSENGER AIRBAG DISABLED INDICATOR - INSTALLATION	8O-34
PASSENGER AIRBAG DISABLED INDICATOR - OPERATION	8O-33
PASSENGER AIRBAG DISABLED INDICATOR - REMOVAL	8O-34
PASSENGER BENCH - INSTALLATION, SEAT BELT BUCKLE - SECOND ROW - THREE	8O-40
PASSENGER BENCH - REMOVAL, SEAT BELT BUCKLE - SECOND ROW - THREE	8O-40
PATTERNS - DIAGNOSIS AND TESTING, TIRE WEAR	22-16
PCM GROUND - OPERATION	8E-14
PCM INPUT - OPERATION, DATA BUS COMMUNICATION RECEIVE	8E-14
PCM INPUT - OPERATION, IGNITION SENSE	8E-14
PCM INPUT - OPERATION, SENSOR RETURN	8E-14
PCM OUTPUT - OPERATION, 5 VOLT SUPPLY	8E-15
PCM/SKIM PROGRAMMING - STANDARD PROCEDURE	8E-1
PCV SYSTEM - DIAGNOSIS AND TESTING	25-18
PCV VALVE - DESCRIPTION	25-18
PCV VALVE - OPERATION	25-18
PEDAL - INSTALLATION, ACCELERATOR	14-28
PEDAL - REMOVAL, ACCELERATOR	14-28
PEDAL TORQUE SHAFT - RHD - INSTALLATION	5-44
PEDAL TORQUE SHAFT - RHD - REMOVAL	5-44
PEDALS - ADJUSTABLE - INSTALLATION	5-43
PEDALS - ADJUSTABLE - REMOVAL	5-40
PEDALS SWITCH - INSTALLATION, ADJUSTABLE	5-11
PEDALS SWITCH - REMOVAL, ADJUSTABLE	5-11
PERFORMANCE - DIAGNOSIS AND TESTING, ENGINE DIAGNOSIS	9-4,9-80
PERFORMANCE TEST, DIAGNOSIS AND TESTING - A/C	24-7
PERFORMANCE TEST, DIAGNOSIS AND TESTING - HEATER	24-10
PIN BUSHINGS (CONTINENTAL TEVES BRAKES) - ASSEMBLY, CALIPER GUIDE	5-25
PIN BUSHINGS (CONTINENTAL TEVES BRAKES) - DISASSEMBLY, CALIPER GUIDE	5-24
PINCH SENSOR - DESCRIPTION	8N-17
PINCH SENSOR - INSTALLATION	8N-18
PINCH SENSOR - OPERATION	8N-17
PINCH SENSOR - REMOVAL	8N-18
PINION FACTOR SETTING - STANDARD PROCEDURE	8E-15
PINS (TRW BRAKES) - INSTALLATION, DISC BRAKE CALIPER GUIDE	5-32
PINS (TRW BRAKES) - REMOVAL, DISC BRAKE CALIPER GUIDE	5-31
PIPE - 3.3/3.8L - INSTALLATION, CROSS-OVER	11-6
PIPE - 3.3/3.8L - REMOVAL, CROSS-OVER	11-6
PIPE - INSTALLATION, AIR INTAKE	24-115
PIPE - REMOVAL, AIR INTAKE	24-115
PIPES - INSTALLATION, HEATER	24-120
PIPES - REMOVAL, HEATER	24-119
PISTON & CONNECTING ROD - DESCRIPTION	9-119,9-44
PISTON & CONNECTING ROD - INSTALLATION	9-45
PISTON & CONNECTING ROD - REMOVAL	9-44
PISTON AND SEAL - ASSEMBLY, CALIPER	5-26,5-30
PISTON AND SEAL - DISASSEMBLY, CALIPER	5-24,5-28
PISTON RING, FITTING	9-47
PISTON RING FITTING - STANDARD PROCEDURE	9-124
PISTON RINGS - INSTALLATION	9-124
PISTON RINGS - REMOVAL	9-124
PISTON TO CYLINDER BORE FITTING - STANDARD PROCEDURE	9-44
PISTONS - STANDARD PROCEDURE, FITTING	9-120
PLANETARY GEARTRAIN - DESCRIPTION	21-112,21-263
PLANETARY GEARTRAIN - OPERATION	21-112, 21-263
PLASTIC BODY PANEL REPAIR - STANDARD PROCEDURE	23-3
PLASTIC GROCERY BAG RETAINER - INSTALLATION	23-149
PLASTIC GROCERY BAG RETAINER - REMOVAL	23-149
PLASTIGAGE - STANDARD PROCEDURE, MEASURING BEARING CLEARANCE USING	9-12,9-86
PLATINUM PLUGS - DESCRIPTION	8I-9
PLAYER - DESCRIPTION, DVD	8A-12
PLAYER - INSTALLATION, DVD	8A-12
PLAYER - REMOVAL, DVD	8A-12
PLUG CABLE - DESCRIPTION, SPARK	8I-10
PLUG CABLE RESISTANCE, SPECIFICATIONS - SPARK	8I-2
PLUG, SPECIFICATIONS - SPARK	8I-2
PLUGS - DESCRIPTION, PLATINUM	8I-9
PLUGS - STANDARD PROCEDURE, ENGINE CORE AND OIL GALLERY	9-10,9-88
PLUMBING - FRONT - DESCRIPTION	24-65
PLUMBING - FRONT - OPERATION	24-65
POINTS - DESCRIPTION, LUBRICATION	0-7
POLISHING - DESCRIPTION, FINESSE SANDING/BUFFING	23-101
PORT REPAIR - STANDARD PROCEDURE, INTAKE MANIFOLD VACUUM	9-148
PORT VALVE CORE - DESCRIPTION, SERVICE	24-95
PORT VALVE CORE - INSTALLATION, SERVICE	24-95
PORT VALVE CORE - REMOVAL, SERVICE	24-95
POSITION SENSOR - DESCRIPTION, CAMSHAFT	8I-4
POSITION SENSOR - DESCRIPTION, CRANKSHAFT	14-29
POSITION SENSOR - DESCRIPTION, THROTTLE	14-40
POSITION SENSOR - OPERATION, CAMSHAFT	8I-4
POSITION SENSOR - OPERATION, CRANKSHAFT	14-29
POSITION SENSOR - OPERATION, THROTTLE	14-41
POSITION SENSOR - REMOVAL, CRANKSHAFT	14-30
POTENTIAL - STANDARD PROCEDURE, TESTING OF VOLTAGE	8W-01-9
POWER - INSTALLATION, WINDOW REGULATOR	23-22
POWER - REMOVAL, WINDOW REGULATOR	23-22
POWER ADJUSTER - INSTALLATION, FRONT SEAT TRACK	23-124
POWER ADJUSTER - REMOVAL, FRONT SEAT TRACK	23-124
POWER BRAKE BOOSTER - DESCRIPTION	5-45
POWER BRAKE BOOSTER - DIAGNOSIS AND TESTING	5-46
POWER BRAKE BOOSTER - OPERATION	5-46
POWER DISTRIBUTION SYSTEM - DESCRIPTION	8W-97-1
POWER DISTRIBUTION SYSTEM - OPERATION	8W-97-1
POWER DISTRIBUTION SYSTEMS, SPECIAL TOOLS	8W-97-1
POWER FOLDAWAY MIRROR SWITCH - EXPORT - DESCRIPTION	8N-29
POWER FOLDAWAY MIRROR SWITCH - EXPORT - INSTALLATION	8N-30
POWER FOLDAWAY MIRROR SWITCH - EXPORT - OPERATION	8N-29
POWER FOLDAWAY MIRROR SWITCH - EXPORT - REMOVAL	8N-29
POWER LIFTGATE CONTROL MODULE - DESCRIPTION	8E-10
POWER LIFTGATE CONTROL MODULE - OPERATION	8E-10
POWER LIFTGATE CONTROL MODULE, DIAGNOSIS AND TESTING	8E-10
POWER LIFTGATE LEARN CYCLE, STANDARD PROCEDURE	8N-8
POWER LIFTGATE SYSTEM - DESCRIPTION	8N-2
POWER LIFTGATE SYSTEM - OPERATION	8N-2
POWER LIFTGATE SYSTEM, DIAGNOSIS AND TESTING	8N-3
POWER LOCKS - DESCRIPTION	8N-20
POWER LOCKS - OPERATION	8N-21
POWER MIRRORS - DESCRIPTION	8N-26
POWER MIRRORS - OPERATION	8N-26
POWER MIRRORS, DIAGNOSIS AND TESTING	8N-27
POWER MODULE - BLOWER MOTOR - DESCRIPTION	24-30
POWER MODULE - BLOWER MOTOR - INSTALLATION	24-31
POWER MODULE - BLOWER MOTOR - OPERATION	24-30
POWER MODULE - BLOWER MOTOR - REMOVAL	24-30
POWER MODULE - DESCRIPTION, INTEGRATED	8W-97-1

Description	Group-Page
POWER MODULE - INSTALLATION, INTEGRATED	8W-97-2
POWER MODULE - OPERATION, INTEGRATED	8W-97-2
POWER MODULE - REAR BLOWER MOTOR - DESCRIPTION	24-40
POWER MODULE - REAR BLOWER MOTOR - INSTALLATION	24-41
POWER MODULE - REAR BLOWER MOTOR - OPERATION	24-40
POWER MODULE - REAR BLOWER MOTOR - REMOVAL	24-41
POWER MODULE - REMOVAL, INTEGRATED	8W-97-2
POWER OUTLET - DESCRIPTION	8W-97-3
POWER OUTLET - DIAGNOSIS & TESTING	8W-97-3
POWER OUTLET - OPERATION	8W-97-3
POWER SEAT SYSTEM, DESCRIPTION	8N-31
POWER SEAT SYSTEM, DIAGNOSIS AND TESTING	8N-33
POWER SEAT SYSTEM, OPERATION	8N-32
POWER SEAT TRACK - DESCRIPTION	8N-37
POWER SEAT TRACK - OPERATION	8N-38
POWER SEAT TRACK, DIAGNOSIS AND TESTING	8N-38
POWER SLIDING DOOR ADJUSTMENT, STANDARD PROCEDURE	8N-49
POWER SLIDING DOOR LEARN CYCLE, STANDARD PROCEDURE	8N-48
POWER SLIDING DOOR SYSTEM - DESCRIPTION	8N-40
POWER SLIDING DOOR SYSTEM - OPERATION	8N-41
POWER SLIDING DOOR SYSTEM, DIAGNOSIS AND TESTING	8N-42
POWER STEERING BELT TENSION - STANDARD PROCEDURE, CHECKING	7-8
POWER STEERING FASTENER TORQUE, SPECIFICATIONS	19-9
POWER STEERING FLUID LEVEL CHECKING - STANDARD PROCEDURE	19-44
POWER STEERING GEAR, SPECIAL TOOLS	19-34
POWER STEERING PUMP INITIAL OPERATION - STANDARD PROCEDURE	19-37
POWER STEERING PUMP, SPECIAL TOOLS	19-44
POWER STEERING, SPECIAL TOOLS	19-9
POWER STEERING SYSTEM - DESCRIPTION	19-1
POWER STEERING SYSTEM - OPERATION	19-1
POWER STEERING SYSTEM FLOW AND PRESSURE TEST - DIAGNOSIS AND TESTING	19-1
POWER TRANSFER UNIT FLUID - DESCRIPTION, AWD	0-6
POWER WINDOWS - DESCRIPTION	8N-61
POWER WINDOWS - OPERATION	8N-61
POWER WINDOWS, DIAGNOSIS AND TESTING	8N-61
POWERING SEVERAL LOADS - STANDARD PROCEDURE, TESTING FOR A SHORT TO GROUND ON FUSES	8W-01-10
PRELOAD - ADJUSTMENT, DIFFERENTIAL BEARING	21-228
PRELOAD MEASUREMENT AND ADJUSTMENT, ADJUSTMENTS - DIFFERENTIAL BEARING	21-79
PREPARATION - STANDARD PROCEDURE, ENGINE GASKET SURFACE	9-11,9-87
PRESSURE - DIAGNOSIS AND TESTING, CHECKING ENGINE OIL	9-53
PRESSURE - DIAGNOSIS AND TESTING, ENGINE OIL	9-138
PRESSURE CAP - DESCRIPTION, RADIATOR	7-27
PRESSURE CAP - OPERATION, RADIATOR	7-27
PRESSURE CAP TESTING - DIAGNOSIS AND TESTING, COOLING SYSTEM	7-28
PRESSURE FOR HIGH SPEED OPERATION - STANDARD PROCEDURE, TIRE	22-17
PRESSURE GAUGE - STANDARD PROCEDURE, FUEL	14-3
PRESSURE LEAKAGE TEST - DIAGNOSIS AND TESTING, CYLINDER COMBUSTION	9-85,9-9
PRESSURE MONITORING - DESCRIPTION, TIRE	22-9
PRESSURE MONITORING - OPERATION, TIRE	22-10
PRESSURE REGULATOR - INSTALLATION, FUEL	14-7
PRESSURE REGULATOR - OPERATION, FUEL	14-7
PRESSURE REGULATOR - REMOVAL, FUEL	14-7
PRESSURE RELEASE PROCEDURE - STANDARD PROCEDURE, FUEL SYSTEM	14-2
PRESSURE RELIEF VALVE - INSTALLATION, OIL	9-144
PRESSURE RELIEF VALVE - REMOVAL, OIL	9-143
PRESSURE RELIEF VALVE, DESCRIPTION - HIGH	24-72
PRESSURE RELIEF VALVE, OPERATION - HIGH	24-72
PRESSURE SENSOR - DESCRIPTION, SEAT WEIGHT BLADDER	8O-43
PRESSURE SENSOR - DIAGNOSIS AND TESTING, TIRE	22-11
PRESSURE SENSOR - OPERATION, SEAT WEIGHT BLADDER	8O-44
PRESSURE, SPECIFICATIONS - FUEL SYSTEM	14-4
PRESSURE SWITCH - DESCRIPTION, OIL	9-144
PRESSURE SWITCH - INSTALLATION, OIL	9-144,9-56
PRESSURE SWITCH - OPERATION, OIL	9-144
PRESSURE SWITCH - REMOVAL, OIL	9-144, 9-56
PRESSURE TEST - DIAGNOSIS AND TESTING, CYLINDER COMPRESSION	9-85,9-9
PRESSURE TEST - DIAGNOSIS AND TESTING, POWER STEERING SYSTEM FLOW	19-1
PRESSURE TESTS - DIAGNOSIS AND TESTING, CLUTCH AIR	21-153,21-8
PRESSURE TESTS - DIAGNOSIS AND TESTING, HYDRAULIC	21-150,21-6
PRESSURE TRANSDUCER - DESCRIPTION, A/C	24-20
PRESSURE TRANSDUCER - OPERATION, A/C	24-20
PRESSURE TRANSDUCER, DIAGNOSIS AND TESTING - A/C	24-21
PRESSURES - STANDARD PROCEDURE, TIRE INFLATION	22-16
PROGRAMMABLE COMMUNICATIONS INTERFACE (PCI) BUS, OPERATION	14-25
PROGRAMMING - STANDARD PROCEDURE, PCM/SKIM	8E-1
PROGRAMMING - STANDARD PROCEDURE, REMOTE KEYLESS ENTRY TRANSMITTER	8N-24
PROGRAMMING - STANDARD PROCEDURE, TRANSPONDER	8Q-6
PROGRAMMING, STANDARD PROCEDURE - ELECTRONIC VEHICLE INFORMATION CENTER	8M-8
PROP ROD - SECOND ROW - FOLD-IN-FLOOR - INSTALLATION, SEAT	23-140
PROP ROD - SECOND ROW - FOLD-IN-FLOOR - REMOVAL, SEAT	23-139
PROPORTIONING - DESCRIPTION, ELECTRONIC VARIABLE BRAKE	5-88
PROPORTIONING - OPERATION, ELECTRONIC VARIABLE BRAKE	5-89
PROPORTIONING VALVE (HEIGHT SENSING) - DESCRIPTION	5-53
PROPORTIONING VALVE (HEIGHT SENSING) - DIAGNOSIS AND TESTING	5-54
PROPORTIONING VALVE (HEIGHT SENSING) - INSTALLATION	5-55
PROPORTIONING VALVE (HEIGHT SENSING) - OPERATION	5-53
PROPORTIONING VALVE (HEIGHT SENSING) - REMOVAL	5-55
PULLEY - DESCRIPTION, GENERATOR DECOUPLER	8F-28
PULLEY - DIAGNOSIS AND TESTING, GENERATOR DECOUPLER	8F-28
PULLEY - INSTALLATION, GENERATOR DECOUPLER	8F-29
PULLEY - INSTALLATION, TIMING BELT TENSIONER	9-70
PULLEY - OPERATION, GENERATOR DECOUPLER	8F-28
PULLEY - REMOVAL, GENERATOR DECOUPLER	8F-29
PULLEY - REMOVAL, TIMING BELT TENSIONER	9-69
PUMP - 2.4L - CLEANING, WATER	7-32
PUMP - 2.4L - DESCRIPTION, WATER	7-32
PUMP - 2.4L - INSPECTION, WATER	7-32
PUMP - 2.4L - INSTALLATION, WATER	7-32
PUMP - 2.4L - REMOVAL, WATER	7-32
PUMP - 3.3/3.8L - CLEANING, WATER	7-35
PUMP - 3.3/3.8L - DESCRIPTION, WATER	7-34
PUMP - 3.3/3.8L - INSPECTION, WATER	7-35
PUMP - 3.3/3.8L - INSTALLATION, WATER	7-35
PUMP - 3.3/3.8L - REMOVAL, WATER	7-34
PUMP - ASSEMBLY, OIL	9-146,9-58
PUMP - ASSEMBLY, OIL	21-112,21-263
PUMP - CLEANING, OIL	9-145,9-57
PUMP - DESCRIPTION, FUEL	14-8
PUMP - DESCRIPTION, FUEL DOSING	24-117
PUMP - DESCRIPTION, OIL	9-144
PUMP - DESCRIPTION, OIL	21-110,21-261
PUMP - DISASSEMBLY, OIL	9-145,9-57
PUMP - DISASSEMBLY, OIL	21-110,21-261
PUMP - INSPECTION, OIL	9-145,9-58
PUMP - INSTALLATION, FUEL DOSING	24-117
PUMP - INSTALLATION, LEAK DETECTION	25-15
PUMP - INSTALLATION, OIL	9-146,9-59
PUMP - INSTALLATION, SEAL - OIL	21-113, 21-264
PUMP - OPERATION, FUEL	14-8
PUMP - OPERATION, FUEL DOSING	24-117
PUMP - OPERATION, OIL	21-110,21-261
PUMP - REMOVAL, FUEL DOSING	24-117
PUMP - REMOVAL, LEAK DETECTION	25-15
PUMP - REMOVAL, OIL	9-144,9-56
PUMP - REMOVAL, SEAL - OIL	21-113,21-264
PUMP (2.4L ENGINE) - INSTALLATION	19-43
PUMP (2.4L ENGINE) - REMOVAL	19-38
PUMP (2.4L/3.3L/3.8L ENGINE) - DESCRIPTION	19-36
PUMP (3.3L/3.8L ENGINE) - INSTALLATION	19-43
PUMP (3.3L/3.8L ENGINE) - REMOVAL	19-40
PUMP (DIESEL) - DESCRIPTION	19-37
PUMP (DIESEL) - INSTALLATION	19-43
PUMP (DIESEL) - REMOVAL	19-41
PUMP INITIAL OPERATION - STANDARD PROCEDURE, POWER STEERING	19-37
PUMP INLET TUBE - 2.4L - DESCRIPTION, WATER	7-36
PUMP INLET TUBE - 2.4L - INSTALLATION, WATER	7-36
PUMP INLET TUBE - 2.4L - REMOVAL, WATER	7-36
PUMP INLET TUBE - 3.3/3.8L - INSTALLATION, WATER	7-37
PUMP INLET TUBE - 3.3/3.8L - REMOVAL, WATER	7-37
PUMP MODULE - DESCRIPTION, FUEL	14-8
PUMP MODULE - OPERATION, FUEL	14-9
PUMP MOTOR - INSTALLATION, WASHER	8R-12
PUMP MOTOR - REMOVAL, WASHER	8R-12
PUMP (PULLEY) - ASSEMBLY	19-42
PUMP (PULLEY) - DISASSEMBLY	19-41
PUMP RELAY - DESCRIPTION, FUEL	14-32
PUMP RELAY - OPERATION, FUEL	14-32
PUMP, SPECIAL TOOLS - POWER STEERING	19-44
PUSH-PIN GROMMET REPLACEMENT, STANDARD PROCEDURE	8N-48
PUSHRODS - DESCRIPTION	9-112
PUSHRODS - OPERATION	9-112
QUAD BUCKET - INSTALLATION, BUCKET SEAT BACK	23-141
QUAD BUCKET - INSTALLATION, SEAT BELT BUCKLE - FIRST ROW INBOARD	8O-36

Description	Group-Page
QUAD BUCKET - REMOVAL, BUCKET SEAT BACK	23-140
QUAD BUCKET - REMOVAL, SEAT BELT BUCKLE - FIRST ROW INBOARD	8O-35
QUAD BUCKET, 50/50 SPLIT, BENCH - INSTALLATION, SEAT BACK HINGE COVERS	23-146
QUAD BUCKET, 50/50 SPLIT, BENCH - INSTALLATION, SEAT CUSHION COVER	23-144
QUAD BUCKET, 50/50 SPLIT, BENCH - REMOVAL, SEAT BACK HINGE COVERS	23-146
QUAD BUCKET, 50/50 SPLIT, BENCH - REMOVAL, SEAT CUSHION COVER	23-144
QUAD BUCKET SEAT RISER - INSTALLATION	23-143
QUAD BUCKET SEAT RISER - REMOVAL	23-143
QUAD BUCKET SEAT SIDE SHIELD - NO CUP HOLDER - INSTALLATION	23-143
QUAD BUCKET SEAT SIDE SHIELD - NO CUP HOLDER - REMOVAL	23-143
QUAD BUCKET SEAT SIDE SHIELD/CUP HOLDER - FLAP AND SPRING ASSEMBLY - INSTALLATION	23-151
QUAD BUCKET SEAT SIDE SHIELD/CUP HOLDER - FLAP AND SPRING ASSEMBLY - REMOVAL	23-151
QUAD BUCKET SEAT SIDE SHIELD/CUP HOLDER - INSTALLATION	23-142
QUAD BUCKET SEAT SIDE SHIELD/CUP HOLDER - REMOVAL	23-141
QUAD CHILD SEAT - INSTALLATION	23-106
QUAD CHILD SEAT - REMOVAL	23-106
QUAD SEAT CUSHION - INSTALLATION	23-141
QUAD SEAT CUSHION - REMOVAL	23-141
QUARTER GLASS INTEGRAL ANTENNA - EXPORT - DESCRIPTION	8A-13
QUARTER GLASS INTEGRAL ANTENNA - EXPORT - OPERATION	8A-13
QUARTER GLASS INTEGRAL ANTENNA, EXPORT	8A-13
QUARTER PANEL/FENDER AIR EXHAUSTER - DESCRIPTION, REAR	23-59
QUARTER PANEL/FENDER AIR EXHAUSTER - INSTALLATION, REAR	23-60
QUARTER PANEL/FENDER AIR EXHAUSTER - REMOVAL, REAR	23-59
QUARTER TRIM BOLSTER - INSTALLATION	23-95
QUARTER TRIM BOLSTER - REMOVAL	23-95
QUARTER TRIM PANEL - INSTALLATION, LEFT	23-94
QUARTER TRIM PANEL - INSTALLATION, RIGHT	23-97
QUARTER TRIM PANEL - REMOVAL, LEFT	23-94
QUARTER TRIM PANEL - REMOVAL, RIGHT	23-97
QUARTER WINDOW - INSTALLATION	23-164
QUARTER WINDOW - REMOVAL	23-164
QUICK CONNECT FITTING DISASSEMBLY/ASSEMBLY - STANDARD PROCEDURE, TRANSMISSION COOLER LINE	7-38
QUICK LEARN PROCEDURE - STANDARD PROCEDURE	8E-15
QUICK-CONNECT FITTINGS - STANDARD PROCEDURE	14-18
RACK - DESCRIPTION, LOWER DRIVE UNIT TRACK	8N-57
RACK - INSTALLATION, LOWER DRIVE UNIT TRACK	8N-58
RACK - OPERATION, LOWER DRIVE UNIT TRACK	8N-57
RACK - REMOVAL, LOWER DRIVE UNIT TRACK	8N-57
RACK CROSSBAR - INSTALLATION, LUGGAGE	23-59
RACK CROSSBAR - REMOVAL, LUGGAGE	23-58
RACK RISER - INSTALLATION, LUGGAGE	23-58
RACK RISER - REMOVAL, LUGGAGE	23-57
RADIAL-PLY TIRES - DESCRIPTION	22-13
RADIATOR - INSTALLATION	7-27
RADIATOR - REMOVAL	7-26
RADIATOR CAP TO FILLER NECK SEAL - DIAGNOSIS AND TESTING	7-28
RADIATOR CROSSMEMBER - INSTALLATION, UPPER	23-56
RADIATOR CROSSMEMBER - REMOVAL, UPPER	23-56
RADIATOR DRAINCOCK - INSTALLATION	7-27
RADIATOR DRAINCOCK - REMOVAL	7-27
RADIATOR FAN - DESCRIPTION	7-29
RADIATOR FAN - INSTALLATION	7-30
RADIATOR FAN - OPERATION	7-29
RADIATOR FAN - REMOVAL	7-30
RADIATOR FAN MOTOR - DIAGNOSIS AND TESTING	7-30
RADIATOR FAN RELAY - DESCRIPTION	7-31
RADIATOR FAN RELAY - INSTALLATION	7-31
RADIATOR FAN RELAY - OPERATION	7-31
RADIATOR FAN RELAY - REMOVAL	7-31
RADIATOR PRESSURE CAP - DESCRIPTION	7-27
RADIATOR PRESSURE CAP - OPERATION	7-27
RADIO - DESCRIPTION	8A-13
RADIO - INSTALLATION, ANTENNA - NAVIGATION	8A-11
RADIO - OPERATION	8A-14
RADIO - REMOVAL, ANTENNA - NAVIGATION	8A-11
RADIO, DIAGNOSIS AND TESTING	8A-14
RADIO NOISE SUPPRESSION COMPONENTS - DESCRIPTION	8A-15
RADIO NOISE SUPPRESSION COMPONENTS - OPERATION	8A-15
RANGE - SPECIFICATIONS, TRANSMITTER	8N-24
RANGE SENSOR - DESCRIPTION, TRANSMISSION	21-130,21-281
RANGE SENSOR - INSTALLATION, TRANSMISSION	21-131,21-282
RANGE SENSOR - OPERATION, TRANSMISSION	21-131,21-282
RANGE SENSOR - REMOVAL, TRANSMISSION	21-131,21-282
READING LAMP - INSTALLATION	8L-23
READING LAMP - REMOVAL	8L-22
RECEIVER / DRIER - DESCRIPTION	24-92
RECEIVER / DRIER - INSTALLATION	24-93
RECEIVER / DRIER - OPERATION	24-92
RECEIVER / DRIER - REMOVAL	24-92
RECIRCULATION DOOR ACTUATOR - DESCRIPTION	24-31
RECIRCULATION DOOR ACTUATOR - INSTALLATION	24-32
RECIRCULATION DOOR ACTUATOR - OPERATION	24-31
RECIRCULATION DOOR ACTUATOR - REMOVAL	24-32
RECLINER HANDLE - INSTALLATION	23-108
RECLINER HANDLE - REMOVAL	23-108
RECLINER/FOLD FORWARD MECHANISM -THIRD ROW -FOLD-IN-FLOOR - INSTALLATION, SEAT	23-160
RECLINER/FOLD FORWARD MECHANISM -THIRD ROW -FOLD-IN-FLOOR - REMOVAL, SEAT	23-160
RECLINER/FORWARD FOLDING MECHANISM -SECOND ROW -FOLD-IN-FLOOR - INSTALLATION, SEAT	23-137
RECLINER/FORWARD FOLDING MECHANISM -SECOND ROW -FOLD-IN-FLOOR - REMOVAL, SEAT	23-137
RECOVERY CONTAINER - DESCRIPTION, COOLANT	7-20
RECOVERY CONTAINER - INSTALLATION, COOLANT	7-20
RECOVERY CONTAINER - OPERATION, COOLANT	7-20
RECOVERY CONTAINER - REMOVAL, COOLANT	7-20
RECOVERY, STANDARD PROCEDURE - REFRIGERANT SYSTEM	24-70
RECOVERY SYSTEM - DIAGNOSIS AND TESTING, COOLANT	7-20
REFACING VALVES AND VALVE SEATS - STANDARD PROCEDURE	9-107
REFRIGERANT - DESCRIPTION	24-93
REFRIGERANT - OPERATION	24-94
REFRIGERANT LINES, INSTALLATION - UNDERBODY	24-112
REFRIGERANT LINES, REMOVAL - UNDERBODY	24-110
REFRIGERANT OIL - DESCRIPTION	24-94
REFRIGERANT OIL - OPERATION	24-94
REFRIGERANT OIL LEVEL, STANDARD PROCEDURE	24-94
REFRIGERANT SYSTEM CHARGE, STANDARD PROCEDURE	24-71
REFRIGERANT SYSTEM EVACUATE, STANDARD PROCEDURE	24-70
REFRIGERANT SYSTEM LEAKS, DIAGNOSIS AND TESTING	24-67
REFRIGERANT SYSTEM RECOVERY, STANDARD PROCEDURE	24-70
REFRIGERANT SYSTEM SERVICE EQUIPMENT, STANDARD PROCEDURE	24-69
REGULATOR - DESCRIPTION, VOLTAGE	8F-30
REGULATOR - INSTALLATION, FUEL PRESSURE	14-7
REGULATOR - MANUAL - INSTALLATION, WINDOW	23-23
REGULATOR - MANUAL - REMOVAL, WINDOW	23-22
REGULATOR - OPERATION, FUEL PRESSURE	14-7
REGULATOR - OPERATION, VOLTAGE	8F-30
REGULATOR - POWER - INSTALLATION, WINDOW	23-22
REGULATOR - POWER - REMOVAL, WINDOW	23-22
REGULATOR - REMOVAL, FUEL PRESSURE	14-7
REINFORCEMENT - INSTALLATION, FRONT BUMPER	13-3
REINFORCEMENT - INSTALLATION, REAR BUMPER	13-5
REINFORCEMENT - REMOVAL, FRONT BUMPER	13-3
REINFORCEMENT - REMOVAL, REAR BUMPER	13-5
RELAY - DESCRIPTION, A/C COMPRESSOR CLUTCH	24-18
RELAY - DESCRIPTION, AUTO SHUT DOWN	8I-3
RELAY - DESCRIPTION, BLOWER MOTOR	24-23,24-36
RELAY - DESCRIPTION, FUEL PUMP	14-32
RELAY - DESCRIPTION, RADIATOR FAN	7-31
RELAY - DESCRIPTION, REAR WINDOW DEFOGGER	8G-3
RELAY - DESCRIPTION, TRANSMISSION CONTROL	21-130,21-281
RELAY - INSTALLATION, A/C COMPRESSOR CLUTCH	24-19
RELAY - INSTALLATION, BLOWER MOTOR	24-24,24-37
RELAY - INSTALLATION, RADIATOR FAN	7-31
RELAY - INSTALLATION, REAR WINDOW DEFOGGER	8G-4
RELAY - OPERATION, A/C COMPRESSOR CLUTCH	24-18
RELAY - OPERATION, AUTO SHUT DOWN	8I-3
RELAY - OPERATION, BLOWER MOTOR	24-23, 24-36
RELAY - OPERATION, FUEL PUMP	14-32
RELAY - OPERATION, RADIATOR FAN	7-31
RELAY - OPERATION, REAR WINDOW DEFOGGER	8G-3
RELAY - OPERATION, TRANSMISSION CONTROL	21-130,21-281
RELAY - REMOVAL, A/C COMPRESSOR CLUTCH	24-19
RELAY - REMOVAL, BLOWER MOTOR	24-24, 24-37
RELAY - REMOVAL, RADIATOR FAN	7-31
RELAY - REMOVAL, REAR WINDOW DEFOGGER	8G-4
RELEASE - STANDARD PROCEDURE, PARKING BRAKE AUTOMATIC ADJUSTER TENSION	5-63
RELEASE CABLE - INSTALLATION, LATCH	23-64
RELEASE CABLE - REMOVAL, LATCH	23-63
RELEASE PROCEDURE - STANDARD PROCEDURE, FUEL SYSTEM PRESSURE	14-2
RELIEF VALVE - INSTALLATION, OIL PRESSURE	9-144
RELIEF VALVE - REMOVAL, OIL PRESSURE	9-143
RELIEF VALVE, DESCRIPTION - HIGH PRESSURE	24-72

Description	Group-Page
RELIEF VALVE, OPERATION - HIGH PRESSURE	24-72
REMOTE ENTRY MODULE - DESCRIPTION, SENTRY KEY	8Q-3
REMOTE ENTRY MODULE - DIAGNOSIS AND TESTING, SENTRY KEY	8Q-5
REMOTE ENTRY MODULE - INSTALLATION, SENTRY KEY	8Q-6
REMOTE ENTRY MODULE - OPERATION, SENTRY KEY	8Q-4
REMOTE ENTRY MODULE - REMOVAL, SENTRY KEY	8Q-6
REMOTE ENTRY SYSTEM - DIAGNOSIS AND TESTING, SENTRY KEY	8Q-3
REMOTE KEYLESS ENTRY TRANSMITTER PROGRAMMING - STANDARD PROCEDURE	8N-24
REMOTE SWITCH, DIAGNOSIS AND TESTING	8N-30
REMOTE SWITCHES - DESCRIPTION	8A-16
REMOTE SWITCHES - OPERATION	8A-16
REMOTE SWITCHES, DIAGNOSIS AND TESTING	8A-16
REPAIR - DESCRIPTION, FRONT CRADLE CROSSMEMBER THREAD	13-14
REPAIR - STANDARD PROCEDURE, INTAKE MANIFOLD VACUUM PORT	9-148
REPAIR - STANDARD PROCEDURE, MANIFOLD STRIPPED THREAD	9-147
REPAIR - STANDARD PROCEDURE, PLASTIC BODY PANEL	23-3
REPAIR OF DAMAGED OR WORN THREADS - STANDARD PROCEDURE	9-10,9-88
REPAIR PROCEDURE, STANDARD PROCEDURE - GRID	8G-5
REPAIRING - STANDARD PROCEDURE, TIRE LEAK	22-17
REQUIREMENTS - DESCRIPTION, FUEL	0-4
REQUIREMENTS - DIESEL ENGINE - DESCRIPTION, FUEL	0-6
REQUIREMENTS, DESCRIPTION - ENGINE COOLING SYSTEM	24-1
RESERVOIR - DESCRIPTION, VACUUM	8P-6
RESERVOIR - INSTALLATION, VACUUM	8P-6
RESERVOIR - INSTALLATION, WASHER	8R-13
RESERVOIR - OPERATION, VACUUM	8P-6
RESERVOIR - REMOVAL, VACUUM	8P-6
RESERVOIR - REMOVAL, WASHER	8R-12
RESET - STANDARD PROCEDURE, PARKING BRAKE AUTOMATIC ADJUSTER TENSION	5-64
RESISTANCE, SPECIFICATIONS - SPARK PLUG CABLE	8I-2
RESISTANCE TEST - DIAGNOSIS AND TESTING, FEED CIRCUIT	8F-35
RESISTOR BLOCK - DESCRIPTION, BLOWER MOTOR	24-24,24-37
RESISTOR BLOCK - OPERATION, BLOWER MOTOR	24-24,24-37
RESISTOR BLOCK, DIAGNOSIS AND TESTING - FRONT BLOWER MOTOR	24-25
RESISTOR BLOCK, DIAGNOSIS AND TESTING - REAR BLOWER MOTOR	24-38
RESONATOR - INSTALLATION	11-9
RESONATOR - REMOVAL	11-9
RESTRAINT ANCHOR - DESCRIPTION, CHILD	8O-9
RESTRAINT ANCHOR - OPERATION, CHILD	8O-10
RESTRAINT CONTROLLER - DESCRIPTION, OCCUPANT	8O-27
RESTRAINT CONTROLLER - INSTALLATION, OCCUPANT	8O-29
RESTRAINT CONTROLLER - OPERATION, OCCUPANT	8O-28
RESTRAINT CONTROLLER - REMOVAL, OCCUPANT	8O-29
RESTRAINTS - DESCRIPTION	8O-2
RESTRAINTS - OPERATION	8O-4
RESTRICTION CHECK - DIAGNOSIS AND TESTING, EXHAUST SYSTEM	11-2
RETAINER - INSTALLATION, CRANKSHAFT REAR OIL SEAL	9-132
RETAINER - INSTALLATION, PLASTIC GROCERY BAG	23-149
RETAINER - REMOVAL, CRANKSHAFT REAR OIL SEAL	9-132
RETAINER - REMOVAL, PLASTIC GROCERY BAG	23-149
RETRACTOR - FIRST ROW - OUTBOARD - INSTALLATION, SEAT BELT	8O-40
RETRACTOR - FIRST ROW - OUTBOARD - REMOVAL, SEAT BELT	8O-39
RETRACTOR - OUTBOARD - FRONT - INSTALLATION, SEAT BELT	8O-39
RETRACTOR - OUTBOARD - FRONT - REMOVAL, SEAT BELT	8O-38
RETRACTOR - SECOND ROW - LEFT OUTBOARD - INSTALLATION, SEAT BELT	8O-42
RETRACTOR - SECOND ROW - LEFT OUTBOARD - REMOVAL, SEAT BELT	8O-42
RETRACTOR - SECOND ROW - RIGHT OUTBOARD - INSTALLATION, SEAT BELT	8O-40
RETRACTOR - SECOND ROW - RIGHT OUTBOARD - REMOVAL, SEAT BELT	8O-40
RETRACTOR - SECOND ROW - RIGHT OUTBOARD WITH REAR HVAC - LWB - INSTALLATION, SEAT BELT	8O-41
RETRACTOR - SECOND ROW - RIGHT OUTBOARD WITH REAR HVAC - LWB - REMOVAL, SEAT BELT	8O-41
RETURN - PCM INPUT - OPERATION, SENSOR	8E-14
RETURN HOSE - INSTALLATION, HEATER	24-89
RETURN HOSE - REMOVAL, HEATER	24-88
RING AND COVER - FOLD-IN-FLOOR - INSTALLATION, CARPET TRIM	23-84
RING AND COVER - FOLD-IN-FLOOR - REMOVAL, CARPET TRIM	23-84
RING, FITTING - PISTON	9-47
RING FITTING - STANDARD PROCEDURE, PISTON	9-124
RINGS - INSTALLATION, PISTON	9-124
RINGS - REMOVAL, PISTON	9-124
RISER - 50/50 SPLIT - INSTALLATION, BENCH SEAT	23-145
RISER - 50/50 SPLIT - REMOVAL, BENCH SEAT	23-145
RISER - INSTALLATION, LUGGAGE RACK	23-58
RISER - INSTALLATION, QUAD BUCKET SEAT	23-143
RISER - MANUAL - OCS - INSTALLATION, FRONT SEAT	23-123
RISER - MANUAL - OCS - REMOVAL, FRONT SEAT	23-123
RISER - REMOVAL, LUGGAGE RACK	23-57
RISER - REMOVAL, QUAD BUCKET SEAT	23-143
RISER - SECOND ROW - FOLD-IN-FLOOR - INSTALLATION, SEAT BASE	23-135
RISER - SECOND ROW - FOLD-IN-FLOOR - REMOVAL, SEAT BASE	23-134
RISER - SECOND ROW - INSTALLATION, BENCH SEAT	23-145
RISER - SECOND ROW - REMOVAL, BENCH SEAT	23-145
RISER - THIRD ROW - INSTALLATION, BENCH SEAT	23-145
RISER - THIRD ROW - REMOVAL, BENCH SEAT	23-145
RISER LATCH LOCKING LINK - INSTALLATION, SEAT	23-151
RISER LATCH LOCKING LINK - REMOVAL, SEAT	23-151
ROAD TEST - DIAGNOSIS AND TESTING	8P-3
ROAD TEST - DIAGNOSIS AND TESTING	21-150, 21-5
ROCKER ARMS - DESCRIPTION	9-112
ROCKER ARMS - INSPECTION	9-35
ROCKER ARMS - INSTALLATION	9-35
ROCKER ARMS - OPERATION	9-112
ROCKER ARMS - REMOVAL	9-35
ROCKER ARMS AND SHAFT - ASSEMBLY	9-113
ROCKER ARMS AND SHAFT - DISASSEMBLY	9-113
ROCKER ARMS AND SHAFT - INSTALLATION	9-113
ROCKER ARMS AND SHAFT - REMOVAL	9-112
ROD - DESCRIPTION, LIFT GEAR & LINK	8N-16
ROD - DESCRIPTION, PISTON & CONNECTING	9-119,9-44
ROD - INSTALLATION, LIFT GEAR & LINK	8N-17
ROD - INSTALLATION, OUTER TIE	19-35
ROD - INSTALLATION, PISTON & CONNECTING	9-45
ROD - OPERATION, LIFT GEAR & LINK	8N-16
ROD - REMOVAL, LIFT GEAR & LINK	8N-16
ROD - REMOVAL, OUTER TIE	19-34
ROD - REMOVAL, PISTON & CONNECTING	9-44
ROD - SECOND ROW - FOLD-IN-FLOOR - INSTALLATION, SEAT PROP	23-140
ROD - SECOND ROW - FOLD-IN-FLOOR - REMOVAL, SEAT PROP	23-139
ROD BEARING CLEARANCE - STANDARD PROCEDURE, MEASURING CONNECTING	9-123
ROD, FITTING - CONNECTING	9-46
RODS - STANDARD PROCEDURE, FITTING CONNECTING	9-119
ROOF JOINT MOLDING - INSTALLATION	23-60
ROOF JOINT MOLDING - REMOVAL	23-60
ROTATING ASSEMBLY - SECOND ROW - FOLD-IN-FLOOR - INSTALLATION, ARMREST	23-130
ROTATING ASSEMBLY - SECOND ROW - FOLD-IN-FLOOR - REMOVAL, ARMREST	23-130
ROTATION - STANDARD PROCEDURE, TIRE AND WHEEL	22-7
ROTOR - DIAGNOSIS AND TESTING, BRAKE	5-55
ROTOR - INSTALLATION, FRONT BRAKE	5-59
ROTOR - REMOVAL, FRONT BRAKE	5-59
ROTOR, EXPORT - BRAKE	5-60
ROTOR MACHINING - STANDARD PROCEDURE, BRAKE	5-58
ROTOR, SPECIFICATIONS - BRAKE	5-60
RUNOUT, SPECIFICATIONS - TONE WHEEL	5-91
SAFETY PRECAUTIONS AND WARNINGS, WARNING	23-1
SAFETY PRECAUTIONS, WARNING - WINDSHIELD	23-161
SANDING/BUFFING & POLISHING - DESCRIPTION, FINESSE	23-101
SBEC CONTROLLER - INSTALLATION	8E-17
SBEC CONTROLLER - REMOVAL	8E-16
SCHEMATICS AND DIAGRAMS - 4XTE TRANSAXLE HYDRAULIC SCHEMATICS	21-199, 21-54
SCHEMATICS AND DIAGRAMS - SPECIAL TOOLS	21-68
SCHEMATICS, SCHEMATICS AND DIAGRAMS - 4XTE TRANSAXLE HYDRAULIC	21-199,21-54
SCREEN - DESCRIPTION, VIDEO	8A-20
SCREEN - INSTALLATION, VIDEO	8A-20
SCREEN - OPERATION, VIDEO	8A-20
SCREEN - REMOVAL, VIDEO	8A-20
SCUFF PAD - INSTALLATION, REAR FASCIA	13-5
SCUFF PAD - REMOVAL, REAR FASCIA	13-5
SEAL - ASSEMBLY, CALIPER PISTON	5-26,5-30
SEAL - DIAGNOSIS AND TESTING, RADIATOR CAP TO FILLER NECK	7-28
SEAL - DISASSEMBLY, CALIPER PISTON	5-24, 5-28
SEAL - FRONT - INSTALLATION, CRANKSHAFT OIL	9-130,9-42
SEAL - FRONT - REMOVAL, CRANKSHAFT OIL	9-130,9-41
SEAL - OIL PUMP - INSTALLATION	21-113, 21-264
SEAL - OIL PUMP - REMOVAL	21-113,21-264
SEAL - REAR - INSTALLATION, CRANKSHAFT OIL	9-131,9-42
SEAL - REAR - REMOVAL, CRANKSHAFT OIL	9-131,9-42
SEAL RETAINER - INSTALLATION, CRANKSHAFT REAR OIL	9-132
SEAL RETAINER - REMOVAL, CRANKSHAFT REAR OIL	9-132
SEALERS, STANDARD PROCEDURE - FORM-IN-PLACE GASKETS	9-11,9-86
SEALING LOCATIONS - FOLD-IN-FLOOR ONLY - SPECIFICATIONS, BODY	23-209
SEALING LOCATIONS - SPECIFICATIONS, BODY	23-183
SEALS - DESCRIPTION, VALVE STEM	9-114

Description	Group-Page
SEAL(S) - INSTALLATION, CAMSHAFT OIL	9-29
SEALS - INSTALLATION, VALVE STEM	9-115
SEAL(S) - REMOVAL, CAMSHAFT OIL	9-28
SEALS - REMOVAL, VALVE STEM	9-115
SEAT - INSTALLATION, FRONT	23-110
SEAT - INSTALLATION, QUAD CHILD	23-106
SEAT - REMOVAL, CHILD SEAT MODULE, BENCH	23-104
SEAT - REMOVAL, FRONT	23-108
SEAT - REMOVAL, QUAD CHILD	23-106
SEAT - SECOND ROW - FOLD-IN-FLOOR - INSTALLATION	23-132
SEAT - SECOND ROW - FOLD-IN-FLOOR - REMOVAL	23-132
SEAT - THIRD ROW - FOLD-IN-FLOOR - INSTALLATION	23-154
SEAT - THIRD ROW - FOLD-IN-FLOOR - REMOVAL	23-153
SEAT BACK - INSTALLATION, BENCH	23-147
SEAT BACK - INSTALLATION, FRONT	23-111
SEAT BACK - QUAD BUCKET - INSTALLATION, BUCKET	23-141
SEAT BACK - QUAD BUCKET - REMOVAL, BUCKET	23-140
SEAT BACK - REMOVAL, BENCH	23-147
SEAT BACK - REMOVAL, FRONT	23-111
SEAT BACK ASSIST STRAP - INSTALLATION, FRONT	23-112
SEAT BACK ASSIST STRAP - REMOVAL, FRONT	23-112
SEAT BACK COVER - INSTALLATION, BENCH	23-148
SEAT BACK COVER - INSTALLATION, FRONT	23-116
SEAT BACK COVER - REMOVAL, BENCH	23-148
SEAT BACK COVER - REMOVAL, FRONT	23-113
SEAT BACK COVER/FOAM - SECOND ROW - FOLD-IN-FLOOR - INSTALLATION	23-133
SEAT BACK COVER/FOAM - SECOND ROW - FOLD-IN-FLOOR - REMOVAL	23-133
SEAT BACK COVER/FOAM - THIRD ROW - FOLD-IN-FLOOR - INSTALLATION	23-156
SEAT BACK COVER/FOAM - THIRD ROW - FOLD-IN-FLOOR - REMOVAL	23-155
SEAT BACK FRAME - SECOND ROW - FOLD-IN-FLOOR - INSTALLATION	23-134
SEAT BACK FRAME - SECOND ROW - FOLD-IN-FLOOR - REMOVAL	23-134
SEAT BACK FRAME - THIRD ROW - FOLD-IN-FLOOR - INSTALLATION	23-157
SEAT BACK FRAME - THIRD ROW - FOLD-IN-FLOOR - REMOVAL	23-156
SEAT BACK HINGE - REMOVAL, BENCH	23-146
SEAT BACK HINGE COVERS - QUAD BUCKET, 50/50 SPLIT, BENCH - INSTALLATION	23-146
SEAT BACK HINGE COVERS - QUAD BUCKET, 50/50 SPLIT, BENCH - REMOVAL	23-146
SEAT BACK PANEL - INSTALLATION, BENCH	23-144
SEAT BACK PANEL - INSTALLATION, FRONT	23-113
SEAT BACK PANEL - REMOVAL, BENCH	23-143
SEAT BACK PANEL - REMOVAL, FRONT	23-112
SEAT BACK PANEL - SECOND ROW -FOLD-IN-FLOOR - INSTALLATION	23-134
SEAT BACK PANEL - SECOND ROW -FOLD-IN-FLOOR - REMOVAL	23-134
SEAT BACK PANEL - THIRD ROW -FOLD-IN-FLOOR - INSTALLATION	23-158
SEAT BACK PANEL - THIRD ROW -FOLD-IN-FLOOR - REMOVAL	23-158
SEAT BACKSTOW STRAP - THIRD ROW - FOLD-IN-FLOOR - INSTALLATION	23-158
SEAT BACKSTOW STRAP - THIRD ROW - FOLD-IN-FLOOR - REMOVAL	23-158
SEAT BASE RISER - SECOND ROW - FOLD-IN-FLOOR - INSTALLATION	23-135
SEAT BASE RISER - SECOND ROW - FOLD-IN-FLOOR - REMOVAL	23-134
SEAT BELT & RETRACTOR - FIRST ROW - OUTBOARD - INSTALLATION	8O-40
SEAT BELT & RETRACTOR - FIRST ROW - OUTBOARD - REMOVAL	8O-39
SEAT BELT & RETRACTOR - OUTBOARD - FRONT - INSTALLATION	8O-39
SEAT BELT & RETRACTOR - OUTBOARD - FRONT - REMOVAL	8O-38
SEAT BELT & RETRACTOR - SECOND ROW - LEFT OUTBOARD - INSTALLATION	8O-42
SEAT BELT & RETRACTOR - SECOND ROW - LEFT OUTBOARD - REMOVAL	8O-42
SEAT BELT & RETRACTOR - SECOND ROW - RIGHT OUTBOARD - INSTALLATION	8O-40
SEAT BELT & RETRACTOR - SECOND ROW - RIGHT OUTBOARD - REMOVAL	8O-40
SEAT BELT & RETRACTOR - SECOND ROW - RIGHT OUTBOARD WITH REAR HVAC - LWB - INSTALLATION	8O-41
SEAT BELT & RETRACTOR - SECOND ROW - RIGHT OUTBOARD WITH REAR HVAC - LWB - REMOVAL	8O-41
SEAT BELT BUCKLE - FIRST ROW - BENCH - INSTALLATION	8O-37
SEAT BELT BUCKLE - FIRST ROW - BENCH - REMOVAL	8O-36
SEAT BELT BUCKLE - FIRST ROW INBOARD - QUAD BUCKET - INSTALLATION	8O-36
SEAT BELT BUCKLE - FIRST ROW INBOARD - QUAD BUCKET - REMOVAL	8O-35
SEAT BELT BUCKLE - FRONT INBOARD - INSTALLATION	8O-35
SEAT BELT BUCKLE - FRONT INBOARD - REMOVAL	8O-35
SEAT BELT BUCKLE - SECOND ROW - THREE PASSENGER BENCH - INSTALLATION	8O-40
SEAT BELT BUCKLE - SECOND ROW - THREE PASSENGER BENCH - REMOVAL	8O-40
SEAT BELT BUCKLE - SECOND ROW INBOARD - 50/50 BENCH - INSTALLATION	8O-38
SEAT BELT BUCKLE - SECOND ROW INBOARD - 50/50 BENCH - REMOVAL	8O-37
SEAT BELT CENTER LAP BELT - FOLD-IN-FLOOR - INSTALLATION	23-157
SEAT BELT CENTER LAP BELT - FOLD-IN-FLOOR - REMOVAL	23-157
SEAT BELT HEIGHT ADJUSTER - B OR C-PILLAR - INSTALLATION	8O-38
SEAT BELT HEIGHT ADJUSTER - B OR C-PILLAR - REMOVAL	8O-38
SEAT BELT HEIGHT ADJUSTER KNOB - INSTALLATION	8O-38
SEAT BELT HEIGHT ADJUSTER KNOB - REMOVAL	8O-38
SEAT BELT TENSIONER - DESCRIPTION	8O-43
SEAT BELT TENSIONER - OPERATION	8O-43
SEAT CUSHION - INSTALLATION, FRONT	23-118
SEAT CUSHION - INSTALLATION, QUAD	23-141
SEAT CUSHION - OCS - INSTALLATION, FRONT	23-120
SEAT CUSHION - OCS - REMOVAL, FRONT	23-119
SEAT CUSHION - REMOVAL, FRONT	23-117
SEAT CUSHION - REMOVAL, QUAD	23-141
SEAT CUSHION COVER - QUAD BUCKET, 50/50 SPLIT, BENCH - INSTALLATION	23-144
SEAT CUSHION COVER - QUAD BUCKET, 50/50 SPLIT, BENCH - REMOVAL	23-144
SEAT CUSHION COVER/FOAM - THIRD ROW - FOLD-IN-FLOOR - INSTALLATION	23-159
SEAT CUSHION COVER/FOAM - THIRD ROW - FOLD-IN-FLOOR - REMOVAL	23-159
SEAT CUSHION COVER/FOAM -SECOND ROW - FOLD-IN-FLOOR - INSTALLATION	23-136
SEAT CUSHION COVER/FOAM -SECOND ROW - FOLD-IN-FLOOR - REMOVAL	23-136
SEAT CUSHION PAN PANEL-THIRD ROW - FOLD-IN-FLOOR - INSTALLATION, BOTTOM OF	23-152
SEAT CUSHION PAN PANEL-THIRD ROW - FOLD-IN-FLOOR - REMOVAL, BOTTOM OF	23-152
SEAT CUSHION SIDE COVER - INSTALLATION, FRONT	23-121
SEAT CUSHION SIDE COVER - OCS - INSTALLATION, FRONT	23-122
SEAT CUSHION SIDE COVER - OCS - REMOVAL, FRONT	23-121
SEAT CUSHION SIDE COVER - REMOVAL, FRONT	23-120
SEAT CUSHION SIDE SHIELD - SECOND ROW - FOLD-IN-FLOOR - INSTALLATION	23-138
SEAT CUSHION SIDE SHIELD - SECOND ROW - FOLD-IN-FLOOR - REMOVAL	23-138
SEAT ELEMENTS - DESCRIPTION, HEATED	8G-11
SEAT ELEMENTS - OPERATION, HEATED	8G-11
SEAT ELEMENTS, DIAGNOSIS AND TESTING - HEATED	8G-11
SEAT GAS STRUT - SECOND ROW - FOLD-IN-FLOOR - INSTALLATION	23-139
SEAT GAS STRUT - SECOND ROW - FOLD-IN-FLOOR - REMOVAL	23-138
SEAT MODULE - DESCRIPTION, HEATED	8E-8
SEAT MODULE - OPERATION, HEATED	8E-8
SEAT MODULE, BENCH SEAT - REMOVAL, CHILD	23-104
SEAT MODULE, DIAGNOSIS AND TESTING - HEATED	8E-9
SEAT PROP ROD - SECOND ROW - FOLD-IN-FLOOR - INSTALLATION	23-140
SEAT PROP ROD - SECOND ROW - FOLD-IN-FLOOR - REMOVAL	23-139
SEAT RECLINER/FOLD FORWARD MECHANISM -THIRD ROW -FOLD-IN-FLOOR - INSTALLATION	23-160
SEAT RECLINER/FOLD FORWARD MECHANISM -THIRD ROW -FOLD-IN-FLOOR - REMOVAL	23-160
SEAT RECLINER/FORWARD FOLDING MECHANISM -SECOND ROW -FOLD-IN-FLOOR - INSTALLATION	23-137
SEAT RECLINER/FORWARD FOLDING MECHANISM -SECOND ROW -FOLD-IN-FLOOR - REMOVAL	23-137
SEAT RISER - 50/50 SPLIT - INSTALLATION, BENCH	23-145
SEAT RISER - 50/50 SPLIT - REMOVAL, BENCH	23-145
SEAT RISER - INSTALLATION, QUAD BUCKET	23-143
SEAT RISER - MANUAL - OCS - INSTALLATION, FRONT	23-123
SEAT RISER - MANUAL - OCS - REMOVAL, FRONT	23-123
SEAT RISER - REMOVAL, QUAD BUCKET	23-143
SEAT RISER - SECOND ROW - INSTALLATION, BENCH	23-145
SEAT RISER - SECOND ROW - REMOVAL, BENCH	23-145
SEAT RISER - THIRD ROW - INSTALLATION, BENCH	23-145
SEAT RISER - THIRD ROW - REMOVAL, BENCH	23-145
SEAT RISER LATCH LOCKING LINK - INSTALLATION	23-151
SEAT RISER LATCH LOCKING LINK - REMOVAL	23-151
SEAT SENSOR - DESCRIPTION, HEATED	8G-13
SEAT SENSOR - OPERATION, HEATED	8G-13
SEAT SENSOR, DIAGNOSIS AND TESTING - HEATED	8G-13
SEAT SIDE SHIELD - NO CUP HOLDER - INSTALLATION, QUAD BUCKET	23-143
SEAT SIDE SHIELD - NO CUP HOLDER - REMOVAL, QUAD BUCKET	23-143
SEAT SIDE SHIELD/CUP HOLDER - FLAP AND SPRING ASSEMBLY - INSTALLATION, QUAD BUCKET	23-151
SEAT SIDE SHIELD/CUP HOLDER - FLAP AND SPRING ASSEMBLY - REMOVAL, QUAD BUCKET	23-151
SEAT SIDE SHIELD/CUP HOLDER - INSTALLATION, QUAD BUCKET	23-142
SEAT SIDE SHIELD/CUP HOLDER - REMOVAL, QUAD BUCKET	23-141
SEAT STORAGE BIN - INSTALLATION, UNDER	23-149
SEAT STORAGE BIN - REMOVAL, UNDER	23-149
SEAT STORAGE BIN GUIDE - INSTALLATION, UNDER	23-150

Description	Group-Page
SEAT STORAGE BIN GUIDE - REMOVAL, UNDER	23-150
SEAT STORAGE BIN LOCK/LATCH - INSTALLATION, UNDER	23-150
SEAT STORAGE BIN LOCK/LATCH - REMOVAL, UNDER	23-150
SEAT SWITCH - DESCRIPTION	8N-34
SEAT SWITCH - DESCRIPTION, HEATED	8G-8
SEAT SWITCH - OPERATION	8N-34
SEAT SWITCH - OPERATION, HEATED	8G-9
SEAT SWITCH, DIAGNOSIS AND TESTING - DRIVER	8N-34
SEAT SWITCH, DIAGNOSIS AND TESTING - DRIVER HEATED	8G-9
SEAT SYSTEM - DESCRIPTION, HEATED	8G-7
SEAT SYSTEM - OPERATION, HEATED	8G-8
SEAT SYSTEM, DESCRIPTION - POWER	8N-31
SEAT SYSTEM, DIAGNOSIS AND TESTING - HEATED	8G-8
SEAT SYSTEM, DIAGNOSIS AND TESTING - POWER	8N-33
SEAT SYSTEM, OPERATION - POWER	8N-32
SEAT TRACK - DESCRIPTION, POWER	8N-37
SEAT TRACK - INSTALLATION, BENCH	23-148
SEAT TRACK - OPERATION, POWER	8N-38
SEAT TRACK - REAR COVER - INSTALLATION, FRONT	23-128
SEAT TRACK - REAR COVER - REMOVAL, FRONT	23-128
SEAT TRACK - REMOVAL, BENCH	23-148
SEAT TRACK ADJUSTER/MANUAL - OCS - INSTALLATION, FRONT	23-128
SEAT TRACK ADJUSTER/MANUAL - OCS - REMOVAL, FRONT	23-126
SEAT TRACK ADJUSTER/POWER - OCS - INSTALLATION, FRONT	23-125
SEAT TRACK ADJUSTER/POWER - OCS - REMOVAL, FRONT	23-124
SEAT TRACK, DIAGNOSIS AND TESTING - POWER	8N-38
SEAT TRACK MANUAL ADJUSTER - INSTALLATION, FRONT	23-126
SEAT TRACK MANUAL ADJUSTER - REMOVAL, FRONT	23-125
SEAT TRACK POWER ADJUSTER - INSTALLATION, FRONT	23-124
SEAT TRACK POWER ADJUSTER - REMOVAL, FRONT	23-124
SEAT TRACK REAR COVER - OCS - INSTALLATION, FRONT	23-129
SEAT TRACK REAR COVER - OCS - REMOVAL, FRONT	23-129
SEAT WEIGHT BLADDER & PRESSURE SENSOR - DESCRIPTION	8O-43
SEAT WEIGHT BLADDER & PRESSURE SENSOR - OPERATION	8O-44
SEATING - INSTALLATION, FOLD-IN-FLOOR	5-68,5-75
SEATING - INSTALLATION, FWD - FOLD-IN-FLOOR	2-45
SEATING - REMOVAL, FOLD-IN-FLOOR	5-66,5-72
SEATING - REMOVAL, FWD - FOLD-IN-FLOOR	2-45
SEAT/MIRROR MODULE - DESCRIPTION, MEMORY	8E-9
SEAT/MIRROR MODULE - OPERATION, MEMORY	8E-9
SEAT/MIRROR MODULE, DIAGNOSIS AND TESTING - MEMORY	8E-9
SEATS - CLEANING, INTAKE/EXHAUST VALVES	9-108,9-33
SEATS - DESCRIPTION, INTAKE/EXHAUST VALVES	9-107,9-33
SEATS - INSPECTION, INTAKE/EXHAUST VALVES	9-108
SEATS - INSTALLATION, INTAKE/EXHAUST VALVES	9-109
SEATS - OPERATION, INTAKE/EXHAUST VALVES	9-107
SEATS - REMOVAL, INTAKE/EXHAUST VALVES	9-108
SEATS - STANDARD PROCEDURE, REFACING VALVES AND VALVE	9-107
SEATS ONLY - SPECIFICATIONS, FRAME DIMENSIONS - FOLD-IN-FLOOR	13-11
SECOND ROW - FOLD-IN-FLOOR - INSTALLATION, ARMREST	23-130
SECOND ROW - FOLD-IN-FLOOR - INSTALLATION, ARMREST ROTATING ASSEMBLY	23-130
SECOND ROW - FOLD-IN-FLOOR - INSTALLATION, HEADREST SLEEVE	23-131
SECOND ROW - FOLD-IN-FLOOR - INSTALLATION, SEAT	23-132
SECOND ROW - FOLD-IN-FLOOR - INSTALLATION, SEAT BACK COVER/FOAM	23-133
SECOND ROW - FOLD-IN-FLOOR - INSTALLATION, SEAT BACK FRAME	23-134
SECOND ROW - FOLD-IN-FLOOR - INSTALLATION, SEAT BASE RISER	23-135
SECOND ROW - FOLD-IN-FLOOR - INSTALLATION, SEAT CUSHION SIDE SHIELD	23-138
SECOND ROW - FOLD-IN-FLOOR - INSTALLATION, SEAT GAS STRUT	23-139
SECOND ROW - FOLD-IN-FLOOR - INSTALLATION, SEAT PROP ROD	23-140
SECOND ROW - FOLD-IN-FLOOR - REMOVAL, ARMREST	23-130
SECOND ROW - FOLD-IN-FLOOR - REMOVAL, ARMREST ROTATING ASSEMBLY	23-130
SECOND ROW - FOLD-IN-FLOOR - REMOVAL, HEADREST SLEEVE	23-131
SECOND ROW - FOLD-IN-FLOOR - REMOVAL, SEAT	23-132
SECOND ROW - FOLD-IN-FLOOR - REMOVAL, SEAT BACK COVER/FOAM	23-133
SECOND ROW - FOLD-IN-FLOOR - REMOVAL, SEAT BACK FRAME	23-134
SECOND ROW - FOLD-IN-FLOOR - REMOVAL, SEAT BASE RISER	23-134
SECOND ROW - FOLD-IN-FLOOR - REMOVAL, SEAT CUSHION SIDE SHIELD	23-138
SECOND ROW - FOLD-IN-FLOOR - REMOVAL, SEAT GAS STRUT	23-138
SECOND ROW - FOLD-IN-FLOOR - REMOVAL, SEAT PROP ROD	23-139
SECOND ROW - INSTALLATION, BENCH SEAT RISER	23-145
SECOND ROW - LEFT OUTBOARD - INSTALLATION, SEAT BELT & RETRACTOR	8O-42
SECOND ROW - LEFT OUTBOARD - REMOVAL, SEAT BELT & RETRACTOR	8O-42
SECOND ROW - REMOVAL, BENCH SEAT RISER	23-145
SECOND ROW - RIGHT OUTBOARD - INSTALLATION, SEAT BELT & RETRACTOR	8O-40
SECOND ROW - RIGHT OUTBOARD - REMOVAL, SEAT BELT & RETRACTOR	8O-40
SECOND ROW - RIGHT OUTBOARD WITH REAR HVAC - LWB - INSTALLATION, SEAT BELT & RETRACTOR	8O-41
SECOND ROW - RIGHT OUTBOARD WITH REAR HVAC - LWB - REMOVAL, SEAT BELT & RETRACTOR	8O-41
SECOND ROW - THREE PASSENGER BENCH - INSTALLATION, SEAT BELT BUCKLE	8O-40
SECOND ROW - THREE PASSENGER BENCH - REMOVAL, SEAT BELT BUCKLE	8O-40
SECOND ROW FLOOR TUB CARPET INSERT - FOLD-IN-FLOOR - INSTALLATION	23-98
SECOND ROW FLOOR TUB CARPET INSERT - FOLD-IN-FLOOR - REMOVAL	23-98
SECOND ROW -FOLD-IN-FLOOR - INSTALLATION, SEAT BACK PANEL	23-134
SECOND ROW -FOLD-IN-FLOOR - REMOVAL, SEAT BACK PANEL	23-134
SECOND ROW INBOARD - 50/50 BENCH - INSTALLATION, SEAT BELT BUCKLE	8O-38
SECOND ROW INBOARD - 50/50 BENCH - REMOVAL, SEAT BELT BUCKLE	8O-37
SECTION IDENTIFICATION AND INFORMATION - DESCRIPTION	8W-01-6
SECURITY - DESCRIPTION, VEHICLE THEFT	8Q-1
SECURITY - OPERATION, VEHICLE THEFT	8Q-1
SECURITY SYSTEM - DIAGNOSIS AND TESTING, VEHICLE THEFT	8Q-3
SELF-DIAGNOSTICS - DIAGNOSIS AND TESTING	8J-2
SENDING UNIT / SENSOR - DESCRIPTION, FUEL LEVEL	14-5
SENDING UNIT / SENSOR - INSTALLATION, FUEL LEVEL	14-6
SENDING UNIT / SENSOR - OPERATION, FUEL LEVEL	14-5
SENDING UNIT / SENSOR - REMOVAL, FUEL LEVEL	14-5
SENSE - PCM INPUT - OPERATION, IGNITION	8E-14
SENSITIVE DEVICES - STANDARD PROCEDURE, ELECTROSTATIC DISCHARGE (ESD)	8W-01-8
SENSOR - 2.4L - DESCRIPTION, ENGINE COOLANT TEMPERATURE	7-21
SENSOR - 2.4L - INSTALLATION, ENGINE COOLANT TEMPERATURE	7-21
SENSOR - 2.4L - REMOVAL, ENGINE COOLANT TEMPERATURE	7-21
SENSOR - 3.3/3.8L - DESCRIPTION, ENGINE COOLANT TEMPERATURE	7-21
SENSOR - 3.3/3.8L - INSTALLATION, ENGINE COOLANT TEMPERATURE	7-23
SENSOR - 3.3/3.8L - REMOVAL, ENGINE COOLANT TEMPERATURE	7-21
SENSOR - AWD - INSTALLATION, REAR WHEEL SPEED	5-92
SENSOR - AWD - REMOVAL, REAR WHEEL SPEED	5-92
SENSOR - DESCRIPTION, AMBIENT TEMP	8M-12
SENSOR - DESCRIPTION, BATTERY TEMPERATURE	8F-24
SENSOR - DESCRIPTION, BELT TENSION	8O-8
SENSOR - DESCRIPTION, CAMSHAFT POSITION	8I-4
SENSOR - DESCRIPTION, CRANKSHAFT POSITION	14-29
SENSOR - DESCRIPTION, ENGINE SPEED	14-30
SENSOR - DESCRIPTION, EVAPORATOR TEMPERATURE	24-26
SENSOR - DESCRIPTION, FUEL LEVEL SENDING UNIT	14-5
SENSOR - DESCRIPTION, HEATED SEAT	8G-13
SENSOR - DESCRIPTION, IMPACT	8O-18
SENSOR - DESCRIPTION, INFRARED TEMPERATURE	24-28
SENSOR - DESCRIPTION, INLET AIR TEMPERATURE	14-34
SENSOR - DESCRIPTION, KNOCK	8I-8
SENSOR - DESCRIPTION, MAP	14-34
SENSOR - DESCRIPTION, O2	14-36
SENSOR - DESCRIPTION, PARK ASSIST	8B-6
SENSOR - DESCRIPTION, PINCH	8N-17
SENSOR - DESCRIPTION, SEAT WEIGHT BLADDER & PRESSURE	8O-43
SENSOR - DESCRIPTION, THROTTLE POSITION	14-40
SENSOR - DESCRIPTION, TRANSMISSION RANGE	21-130,21-281
SENSOR - DIAGNOSIS AND TESTING, TIRE PRESSURE	22-11
SENSOR - FWD - INSTALLATION, REAR WHEEL SPEED	5-93
SENSOR - FWD - REMOVAL, REAR WHEEL SPEED	5-93
SENSOR - INPUT - DESCRIPTION, SPEED	21-120,21-271
SENSOR - INPUT - INSTALLATION, SPEED	21-121,21-272
SENSOR - INPUT - OPERATION, SPEED	21-120, 21-271
SENSOR - INPUT - REMOVAL, SPEED	21-121, 21-272
SENSOR - INSTALLATION, FRONT WHEEL SPEED	5-92
SENSOR - INSTALLATION, FUEL LEVEL SENDING UNIT	14-6
SENSOR - INSTALLATION, IMPACT	8O-21
SENSOR - INSTALLATION, PARK ASSIST	8B-6
SENSOR - INSTALLATION, PINCH	8N-18
SENSOR - INSTALLATION, TRANSMISSION RANGE	21-131,21-282
SENSOR - OPERATION, AMBIENT TEMP	8M-12

Description	Group-Page
SENSOR - OPERATION, BATTERY TEMPERATURE	8F-24
SENSOR - OPERATION, BELT TENSION	8O-9
SENSOR - OPERATION, CAMSHAFT POSITION	8I-4
SENSOR - OPERATION, CRANKSHAFT POSITION	14-29
SENSOR - OPERATION, ENGINE SPEED	14-30
SENSOR - OPERATION, EVAPORATOR TEMPERATURE	24-27
SENSOR - OPERATION, FUEL LEVEL SENDING UNIT	14-5
SENSOR - OPERATION, HEATED SEAT	8G-13
SENSOR - OPERATION, INFRARED TEMPERATURE	24-28
SENSOR - OPERATION, KNOCK	8I-8
SENSOR - OPERATION, MAP	14-34
SENSOR - OPERATION, O2	14-36
SENSOR - OPERATION, PARK ASSIST	8B-6
SENSOR - OPERATION, PINCH	8N-17
SENSOR - OPERATION, SEAT WEIGHT BLADDER & PRESSURE	8O-44
SENSOR - OPERATION, THROTTLE POSITION	14-41
SENSOR - OPERATION, TRANSMISSION RANGE	21-131,21-282
SENSOR - OUTPUT - DESCRIPTION, SPEED	21-122,21-273
SENSOR - OUTPUT - INSTALLATION, SPEED	21-123,21-274
SENSOR - OUTPUT - OPERATION, SPEED	21-122,21-273
SENSOR - OUTPUT - REMOVAL, SPEED	21-123, 21-274
SENSOR - REMOVAL, BATTERY TEMPERATURE	8F-24
SENSOR - REMOVAL, CRANKSHAFT POSITION	14-30
SENSOR - REMOVAL, FRONT WHEEL SPEED	5-91
SENSOR - REMOVAL, FUEL LEVEL SENDING UNIT	14-5
SENSOR - REMOVAL, IMPACT	8O-19
SENSOR - REMOVAL, PARK ASSIST	8B-6
SENSOR - REMOVAL, PINCH	8N-18
SENSOR - REMOVAL, TRANSMISSION RANGE	21-131,21-282
SENSOR - SPECIFICATIONS, BATTERY TEMPERATURE	8F-23
SENSOR - TPM - CAUTION	22-11
SENSOR - TPM - DESCRIPTION	22-10
SENSOR - TPM - INSTALLATION	22-11
SENSOR - TPM - OPERATION	22-10
SENSOR - TPM - REMOVAL	22-11
SENSOR AIR GAP, SPECIFICATIONS - WHEEL SPEED	5-91
SENSOR CIRCUIT, DIAGNOSIS AND TESTING - AMBIENT TEMPERATURE	8M-12
SENSOR, DIAGNOSIS AND TESTING - AMBIENT TEMPERATURE	8M-12
SENSOR, DIAGNOSIS AND TESTING - HEATED SEAT	8G-13
SENSOR RETURN - PCM INPUT - OPERATION	8E-14
SENTRY KEY REMOTE ENTRY MODULE - DESCRIPTION	8Q-3
SENTRY KEY REMOTE ENTRY MODULE - DIAGNOSIS AND TESTING	8Q-5
SENTRY KEY REMOTE ENTRY MODULE - INSTALLATION	8Q-6
SENTRY KEY REMOTE ENTRY MODULE - OPERATION	8Q-4
SENTRY KEY REMOTE ENTRY MODULE - REMOVAL	8Q-6
SENTRY KEY REMOTE ENTRY SYSTEM - DIAGNOSIS AND TESTING	8Q-3
SERVO - DESCRIPTION	8P-4
SERVO - INSTALLATION	8P-4
SERVO - OPERATION	8P-4
SERVO - REMOVAL	8P-4
SETTING - STANDARD PROCEDURE, PINION FACTOR	8E-15
SETTING TRANSMITTER CODES, STANDARD PROCEDURE	8M-12
SEVERAL LOADS - STANDARD PROCEDURE, TESTING FOR A SHORT TO GROUND ON FUSES POWERING	8W-01-10
SHACKLE - INSTALLATION, SPRING	2-44
SHACKLE - REMOVAL, SPRING	2-44
SHAFT - ASSEMBLY, ROCKER ARMS	9-113
SHAFT - DIAGNOSIS AND TESTING, HALF	3-1
SHAFT - DISASSEMBLY, ROCKER ARMS	9-113
SHAFT - FRONT - DESCRIPTION, HALF	3-1
SHAFT - FRONT - INSTALLATION, HALF	3-4
SHAFT - FRONT - REMOVAL, HALF	3-2
SHAFT - FRONT - SPECIFICATIONS, HALF	3-6
SHAFT - INSTALLATION, ROCKER ARMS	9-113
SHAFT - REMOVAL, ROCKER ARMS	9-112
SHAFT - RHD - INSTALLATION, PEDAL TORQUE	5-44
SHAFT - RHD - REMOVAL, PEDAL TORQUE	5-44
SHAFTS AND CARRIER ASSEMBLY - DESCRIPTION, BALANCE	9-71
SHAFTS AND CARRIER ASSEMBLY - INSTALLATION, BALANCE	9-73
SHAFTS AND CARRIER ASSEMBLY - OPERATION, BALANCE	9-71
SHAFTS AND CARRIER ASSEMBLY - REMOVAL, BALANCE	9-71
SHIELD - INSTALLATION, FRONT WHEELHOUSE SPLASH	23-57
SHIELD - NO CUP HOLDER - INSTALLATION, QUAD BUCKET SEAT SIDE	23-143
SHIELD - NO CUP HOLDER - REMOVAL, QUAD BUCKET SEAT SIDE	23-143
SHIELD - REMOVAL, FRONT WHEELHOUSE SPLASH	23-57
SHIELD - SECOND ROW - FOLD-IN-FLOOR - INSTALLATION, SEAT CUSHION SIDE	23-138
SHIELD - SECOND ROW - FOLD-IN-FLOOR - REMOVAL, SEAT CUSHION SIDE	23-138
SHIELD CUP HOLDER - FOLD-IN-FLOOR - INSTALLATION, SIDE	23-160
SHIELD CUP HOLDER - FOLD-IN-FLOOR - REMOVAL, SIDE	23-160
SHIELD/CUP HOLDER - FLAP AND SPRING ASSEMBLY - INSTALLATION, QUAD BUCKET SEAT SIDE	23-151
SHIELD/CUP HOLDER - FLAP AND SPRING ASSEMBLY - REMOVAL, QUAD BUCKET SEAT SIDE	23-151
SHIELD/CUP HOLDER - INSTALLATION, QUAD BUCKET SEAT SIDE	23-142
SHIELD/CUP HOLDER - REMOVAL, QUAD BUCKET SEAT SIDE	23-141
SHIELDS - DESCRIPTION, HEAT	11-7
SHIELDS - INSTALLATION, HEAT	11-7
SHIELDS - OPERATION, HEAT	11-7
SHIELDS - REMOVAL, HEAT	11-7
SHIFT CABLE - INSTALLATION, GEAR	21-234
SHIFT CABLE - REMOVAL, GEAR	21-233,21-84
SHIFT INTERLOCK SOLENOID - DESCRIPTION	21-113,21-264
SHIFT INTERLOCK SOLENOID - DIAGNOSIS AND TESTING, BRAKE/TRANSMISSION	21-115,21-266
SHIFT INTERLOCK SOLENOID - INSTALLATION	21-116,21-267
SHIFT INTERLOCK SOLENOID - OPERATION	21-114,21-265
SHIFT INTERLOCK SOLENOID - REMOVAL	21-115,21-266
SHOCK ABSORBER - DESCRIPTION	2-36
SHOCK ABSORBER - INSTALLATION	2-38
SHOCK ABSORBER - OPERATION	2-36
SHOCK ABSORBER - REMOVAL	2-36
SHOCK ABSORBER (UPPER BUSHING) - ASSEMBLY	2-37
SHOCK ABSORBER (UPPER BUSHING) - DISASSEMBLY	2-37
SHOE LINING - INSPECTION, REAR DRUM BRAKE	5-22
SHOES - ADJUSTMENT, PARKING BRAKE	5-85
SHOES - ADJUSTMENT, REAR DRUM BRAKE	5-23
SHOES - CLEANING, DISC BRAKE	5-16,5-18
SHOES - INSPECTION, DISC BRAKE	5-16,5-18
SHOES - INSTALLATION, REAR DISC BRAKE	5-19
SHOES - INSTALLATION, REAR DRUM BRAKE	5-22
SHOES - PARKING BRAKE - INSTALLATION	5-84
SHOES - PARKING BRAKE - REMOVAL	5-78
SHOES - REMOVAL, REAR DISC BRAKE	5-17
SHOES - REMOVAL, REAR DRUM BRAKE	5-19
SHOES (CONTINENTAL TEVES BRAKES) - INSTALLATION, FRONT DISC BRAKE	5-16
SHOES (CONTINENTAL TEVES BRAKES) - REMOVAL, FRONT DISC BRAKE	5-15
SHOES (TRW BRAKES) - INSTALLATION, FRONT DISC BRAKE	5-17
SHOES (TRW BRAKES) - REMOVAL, FRONT DISC BRAKE	5-15
SHORT TO GROUND - STANDARD PROCEDURE, TESTING FOR A	8W-01-9
SHORT TO GROUND ON FUSES POWERING SEVERAL LOADS - STANDARD PROCEDURE, TESTING FOR A	8W-01-10
SHROUD - LOWER - INSTALLATION	19-21
SHROUD - LOWER - REMOVAL	19-21
SHROUD - UPPER - INSTALLATION	19-22
SHROUD - UPPER - REMOVAL	19-22
SHUT DOWN RELAY - DESCRIPTION, AUTO	8I-3
SHUT DOWN RELAY - OPERATION, AUTO	8I-3
SIDE - INSTALLATION, BODY	23-44
SIDE - INSTALLATION, LIFTGATE	23-44
SIDE - REMOVAL, BODY	23-44
SIDE - REMOVAL, LIFTGATE	23-44
SIDE COVER - INSTALLATION, FRONT SEAT CUSHION	23-121
SIDE COVER - OCS - INSTALLATION, FRONT SEAT CUSHION	23-122
SIDE COVER - OCS - REMOVAL, FRONT SEAT CUSHION	23-121
SIDE COVER - REMOVAL, FRONT SEAT CUSHION	23-120
SIDE MOLDINGS - INSTALLATION, BODY	23-46
SIDE MOLDINGS - REMOVAL, BODY	23-45
SIDE SHIELD - NO CUP HOLDER - INSTALLATION, QUAD BUCKET SEAT	23-143
SIDE SHIELD - NO CUP HOLDER - REMOVAL, QUAD BUCKET SEAT	23-143
SIDE SHIELD - SECOND ROW - FOLD-IN-FLOOR - INSTALLATION, SEAT CUSHION	23-138
SIDE SHIELD - SECOND ROW - FOLD-IN-FLOOR - REMOVAL, SEAT CUSHION	23-138
SIDE SHIELD CUP HOLDER - FOLD-IN-FLOOR - INSTALLATION	23-160
SIDE SHIELD CUP HOLDER - FOLD-IN-FLOOR - REMOVAL	23-160
SIDE SHIELD/CUP HOLDER - FLAP AND SPRING ASSEMBLY - INSTALLATION, QUAD BUCKET SEAT	23-151
SIDE SHIELD/CUP HOLDER - FLAP AND SPRING ASSEMBLY - REMOVAL, QUAD BUCKET SEAT	23-151
SIDE SHIELD/CUP HOLDER - INSTALLATION, QUAD BUCKET SEAT	23-142
SIDE SHIELD/CUP HOLDER - REMOVAL, QUAD BUCKET SEAT	23-141
SIDE VIEW MIRROR - INSTALLATION	23-60
SIDE VIEW MIRROR - REMOVAL	23-60
SIDEVIEW MIRROR - REMOVAL	8N-30
SIGNAL LAMP - INSTALLATION, PARK/TURN	8L-18
SIGNAL LAMP - REMOVAL, PARK/TURN	8L-18
SIGNAL SYSTEM - DESCRIPTION, TURN	8L-17
SIGNAL SYSTEM - OPERATION, TURN	8L-17
SILL PLATE - INSTALLATION, LIFTGATE	23-95
SILL PLATE - INSTALLATION, SLIDING DOOR	23-99
SILL PLATE - REMOVAL, LIFTGATE	23-94
SILL PLATE - REMOVAL, SLIDING DOOR	23-98
SILL TRIM PLATE - INSTALLATION, DOOR	23-89
SILL TRIM PLATE - REMOVAL, DOOR	23-89
SINGLE ZONE, DESCRIPTION - MANUAL	24-2
SINGLE ZONE, OPERATION - MANUAL	24-4
SLEEVE - INSTALLATION, HEADREST	23-107
SLEEVE - REMOVAL, HEADREST	23-107
SLEEVE - SECOND ROW - FOLD-IN-FLOOR - INSTALLATION, HEADREST	23-131
SLEEVE - SECOND ROW - FOLD-IN-FLOOR - REMOVAL, HEADREST	23-131

Description	Group-Page
SLEEVE - THIRD ROW - FOLD-IN-FLOOR - INSTALLATION, HEADREST	23-153
SLEEVE - THIRD ROW - FOLD-IN-FLOOR - REMOVAL, HEADREST	23-152
SLIDING DOOR - INSTALLATION	23-29
SLIDING DOOR - REMOVAL	23-29
SLIDING DOOR ADJUSTMENT, STANDARD PROCEDURE - POWER	8N-49
SLIDING DOOR ADJUSTMENTS, ADJUSTMENTS	23-30
SLIDING DOOR CONTROL MODULE - DESCRIPTION	8E-18
SLIDING DOOR CONTROL MODULE - OPERATION	8E-18
SLIDING DOOR CONTROL MODULE, DIAGNOSIS AND TESTING	8E-18
SLIDING DOOR GLASS - INSTALLATION	23-163
SLIDING DOOR GLASS - REMOVAL	23-163
SLIDING DOOR LEARN CYCLE, STANDARD PROCEDURE - POWER	8N-48
SLIDING DOOR LOCK MOTOR - INSTALLATION	8N-25
SLIDING DOOR LOCK MOTOR - REMOVAL	8N-25
SLIDING DOOR MOTOR - DESCRIPTION	8N-51
SLIDING DOOR MOTOR - INSTALLATION	8N-51
SLIDING DOOR MOTOR - OPERATION	8N-51
SLIDING DOOR MOTOR - REMOVAL	8N-51
SLIDING DOOR SILL PLATE - INSTALLATION	23-99
SLIDING DOOR SILL PLATE - REMOVAL	23-98
SLIDING DOOR STOP BUMPER BEZEL - INSTALLATION	23-25
SLIDING DOOR STOP BUMPER BEZEL - REMOVAL	23-25
SLIDING DOOR SYSTEM - DESCRIPTION, POWER	8N-40
SLIDING DOOR SYSTEM - OPERATION, POWER	8N-41
SLIDING DOOR SYSTEM, DIAGNOSIS AND TESTING - POWER	8N-42
SLIDING DOOR WEATHERSTRIP - INSTALLATION	23-168
SLIDING DOOR WEATHERSTRIP - REMOVAL	23-168
SOCKET - INSTALLATION, STABILIZER	23-33
SOCKET - REMOVAL, STABILIZER	23-33
SOLENOID - DESCRIPTION, EVAP/PURGE	25-13
SOLENOID - DESCRIPTION, SHIFT INTERLOCK	21-113,21-264
SOLENOID - DIAGNOSIS AND TESTING, BRAKE/TRANSMISSION SHIFT INTERLOCK	21-115,21-266
SOLENOID - INSTALLATION, EVAP/ PURGE	25-13
SOLENOID - INSTALLATION, SHIFT INTERLOCK	21-116,21-267
SOLENOID - OPERATION, EVAP/PURGE	25-13
SOLENOID - OPERATION, SHIFT INTERLOCK	21-114,21-265
SOLENOID - REMOVAL, EVAP/PURGE	25-13
SOLENOID - REMOVAL, SHIFT INTERLOCK	21-115,21-266
SOLENOID/PRESSURE SWITCH ASSY - DESCRIPTION	21-117,21-268
SOLENOID/PRESSURE SWITCH ASSY - INSTALLATION	21-119,21-270
SOLENOID/PRESSURE SWITCH ASSY - OPERATION	21-118,21-268
SOLENOID/PRESSURE SWITCH ASSY - REMOVAL	21-118,21-269
SPARE TIRE (TEMPORARY) - DESCRIPTION	22-14
SPARK PLUG CABLE - DESCRIPTION	8I-10
SPARK PLUG CABLE RESISTANCE, SPECIFICATIONS	8I-2
SPARK PLUG, SPECIFICATIONS	8I-2
SPEAKER, DIAGNOSIS AND TESTING	8A-18
SPEED CONTROL - DESCRIPTION	8P-1
SPEED CONTROL (4 SPEED EATX ONLY) - OPERATION, INTERACTIVE	8P-2
SPEED OPERATION - STANDARD PROCEDURE, TIRE PRESSURE FOR HIGH	22-17
SPEED SENSOR - AWD - INSTALLATION, REAR WHEEL	5-92
SPEED SENSOR - AWD - REMOVAL, REAR WHEEL	5-92
SPEED SENSOR - DESCRIPTION, ENGINE	14-30
SPEED SENSOR - FWD - INSTALLATION, REAR WHEEL	5-93
SPEED SENSOR - FWD - REMOVAL, REAR WHEEL	5-93
SPEED SENSOR - INPUT - DESCRIPTION	21-120,21-271
SPEED SENSOR - INPUT - INSTALLATION	21-121,21-272
SPEED SENSOR - INPUT - OPERATION	21-120, 21-271
SPEED SENSOR - INPUT - REMOVAL	21-121, 21-272
SPEED SENSOR - INSTALLATION, FRONT WHEEL	5-92
SPEED SENSOR - OPERATION, ENGINE	14-30
SPEED SENSOR - OUTPUT - DESCRIPTION	21-122,21-273
SPEED SENSOR - OUTPUT - INSTALLATION	21-123,21-274
SPEED SENSOR - OUTPUT - OPERATION	21-122,21-273
SPEED SENSOR - OUTPUT - REMOVAL	21-123, 21-274
SPEED SENSOR - REMOVAL, FRONT WHEEL	5-91
SPEED SENSOR AIR GAP, SPECIFICATIONS - WHEEL	5-91
SPIRAL PLATE BATTERY CHARGING, STANDARD PROCEDURE	8F-10
SPLASH SHIELD - INSTALLATION, FRONT WHEELHOUSE	23-57
SPLASH SHIELD - REMOVAL, FRONT WHEELHOUSE	23-57
SPLICE INFORMATION - DESCRIPTION, CONNECTOR, GROUND	8W-01-7
SPLICING - STANDARD PROCEDURE, WIRE	8W-01-15
SPLIT - INSTALLATION, BENCH SEAT RISER - 50/50	23-145
SPLIT - REMOVAL, BENCH SEAT RISER - 50/50	23-145
SPLIT, BENCH - INSTALLATION, SEAT BACK HINGE COVERS - QUAD BUCKET, 50/50	23-146
SPLIT, BENCH - INSTALLATION, SEAT CUSHION COVER - QUAD BUCKET, 50/50	23-144
SPLIT, BENCH - REMOVAL, SEAT BACK HINGE COVERS - QUAD BUCKET, 50/50	23-146
SPLIT, BENCH - REMOVAL, SEAT CUSHION COVER - QUAD BUCKET, 50/50	23-144
SPRING - AWD - INSTALLATION	2-39
SPRING - AWD - REMOVAL	2-38
SPRING - CARGO - INSTALLATION	2-40
SPRING - CARGO - REMOVAL	2-40
SPRING - FWD - INSTALLATION	2-42
SPRING - FWD - REMOVAL	2-40
SPRING ASSEMBLY - INSTALLATION, QUAD BUCKET SEAT SIDE SHIELD/CUP HOLDER - FLAP	23-151
SPRING ASSEMBLY - REMOVAL, QUAD BUCKET SEAT SIDE SHIELD/CUP HOLDER - FLAP	23-151
SPRING FRONT - INSTALLATION, BUSHING - LEAF	2-30
SPRING FRONT - REMOVAL, BUSHING - LEAF	2-29
SPRING MOUNTS - FRONT - INSTALLATION	2-43
SPRING MOUNTS - FRONT - REMOVAL	2-42
SPRING MOUNTS - REAR - INSTALLATION	2-43
SPRING MOUNTS - REAR - REMOVAL	2-43
SPRING SHACKLE - INSTALLATION	2-44
SPRING SHACKLE - REMOVAL	2-44
SPRINGS - DESCRIPTION, VALVE	9-109
SPRINGS - OPERATION, VALVE	9-109
SPROCKET - INSTALLATION, CRANKSHAFT	9-160,9-67
SPROCKET - INSTALLATION, TIMING CHAIN AND CAMSHAFT	9-160
SPROCKET - REMOVAL, CRANKSHAFT	9-159, 9-66
SPROCKET - REMOVAL, TIMING CHAIN AND CAMSHAFT	9-159
SPROCKETS - INSTALLATION, CAMSHAFT	9-67
SPROCKETS - REMOVAL, CAMSHAFT	9-66
STABILIZER - INSTALLATION	23-33
STABILIZER - REMOVAL	23-33
STABILIZER BAR - DESCRIPTION	2-16,2-44
STABILIZER BAR - INSPECTION	2-17
STABILIZER BAR - INSTALLATION	2-17
STABILIZER BAR - OPERATION	2-16,2-44
STABILIZER BAR - REMOVAL	2-17
STABILIZER BAR CUSHION - INSTALLATION	2-4
STABILIZER BAR CUSHION - REMOVAL	2-4
STABILIZER SOCKET - INSTALLATION	23-33
STABILIZER SOCKET - REMOVAL	23-33
STAKING - STANDARD PROCEDURE, HEAT	23-9
STANDARD 4 CYLINDER - DESCRIPTION	8I-9
STARTER, SPECIFICATIONS	8F-37
STARTING - DESCRIPTION	8F-31
STARTING - OPERATION	8F-31
STARTING - STANDARD PROCEDURE, JUMP	0-25
STARTING SYSTEM TEST - DIAGNOSIS AND TESTING	8F-31
STATE DISPLAY TEST MODE, OPERATION - DRB III®	25-10
STEERING - DIAGNOSIS AND TESTING, SUSPENSION	2-50
STEERING BELT TENSION - STANDARD PROCEDURE, CHECKING POWER	7-8
STEERING COLUMN - DESCRIPTION	19-10
STEERING COLUMN - DIAGNOSIS AND TESTING	19-11
STEERING COLUMN COVER - INSTALLATION, LOWER	23-74
STEERING COLUMN COVER - INSTALLATION, OVER	23-76
STEERING COLUMN COVER - REMOVAL, LOWER	23-74
STEERING COLUMN COVER - REMOVAL, OVER	23-76
STEERING FASTENER TORQUE, SPECIFICATIONS - POWER	19-9
STEERING FLUID LEVEL CHECKING - STANDARD PROCEDURE, POWER	19-44
STEERING GEAR, SPECIAL TOOLS - POWER	19-34
STEERING KNUCKLE - INSPECTION	2-9
STEERING KNUCKLE - INSTALLATION	2-9
STEERING KNUCKLE - REMOVAL	2-7
STEERING PUMP INITIAL OPERATION - STANDARD PROCEDURE, POWER	19-37
STEERING PUMP, SPECIAL TOOLS - POWER	19-44
STEERING, SPECIAL TOOLS - POWER	19-9
STEERING SYSTEM - DESCRIPTION, POWER	19-1
STEERING SYSTEM - OPERATION, POWER	19-1
STEERING SYSTEM DIAGNOSIS CHARTS - DIAGNOSIS AND TESTING	19-3
STEERING SYSTEM FLOW AND PRESSURE TEST - DIAGNOSIS AND TESTING, POWER	19-1
STEERING WHEEL - INSTALLATION	19-24
STEERING WHEEL - REMOVAL	19-23
STEM SEALS - DESCRIPTION, VALVE	9-114
STEM SEALS - INSTALLATION, VALVE	9-115
STEM SEALS - REMOVAL, VALVE	9-115
STOP BUMPER - INSTALLATION	23-25
STOP BUMPER - REMOVAL	23-25
STOP BUMPER BEZEL - INSTALLATION, SLIDING DOOR	23-25
STOP BUMPER BEZEL - REMOVAL, SLIDING DOOR	23-25
STOP LAMP - INSTALLATION, CENTER HIGH MOUNTED	8L-6
STOP LAMP - REMOVAL, CENTER HIGH MOUNTED	8L-6
STOP LAMP UNIT - INSTALLATION, CENTER HIGH MOUNTED	8L-6
STOP LAMP UNIT - REMOVAL, CENTER HIGH MOUNTED	8L-6
STORAGE BIN - INSTALLATION, UNDER SEAT	23-149
STORAGE BIN - REMOVAL, UNDER SEAT	23-149

Description	Group-Page
STORAGE BIN GUIDE - INSTALLATION, UNDER SEAT	23-150
STORAGE BIN GUIDE - REMOVAL, UNDER SEAT	23-150
STORAGE BIN LOCK/LATCH - INSTALLATION, UNDER SEAT	23-150
STORAGE BIN LOCK/LATCH - REMOVAL, UNDER SEAT	23-150
STRAP - INSTALLATION, CHECK	23-15
STRAP - INSTALLATION, FRONT SEAT BACK ASSIST	23-112
STRAP - REMOVAL, CHECK	23-15
STRAP - REMOVAL, FRONT SEAT BACK ASSIST	23-112
STRAP - THIRD ROW - FOLD-IN-FLOOR - INSTALLATION, SEAT BACKSTOW	23-158
STRAP - THIRD ROW - FOLD-IN-FLOOR - REMOVAL, SEAT BACKSTOW	23-158
STRIKER - INSTALLATION, CENTER	23-28
STRIKER - INSTALLATION, FUEL FILL DOOR BLOCKER LATCH	23-53
STRIKER - INSTALLATION, GLOVE BOX LATCH	23-66
STRIKER - INSTALLATION, HOLD OPEN LATCH	23-26
STRIKER - INSTALLATION, LATCH	23-19,23-42, 23-64
STRIKER - INSTALLATION, REAR LATCH	23-29
STRIKER - REMOVAL, CENTER	23-28
STRIKER - REMOVAL, FUEL FILL DOOR BLOCKER LATCH	23-53
STRIKER - REMOVAL, GLOVE BOX LATCH	23-66
STRIKER - REMOVAL, HOLD OPEN LATCH	23-26
STRIKER - REMOVAL, LATCH	23-19,23-41,23-64
STRIKER - REMOVAL, REAR LATCH	23-29
STRIPPED THREAD REPAIR - STANDARD PROCEDURE, MANIFOLD	9-147
STRUCTURAL ADHESIVE LOCATIONS - FOLD-IN-FLOOR ONLY - SPECIFICATIONS	23-228
STRUCTURAL ADHESIVE LOCATIONS - SPECIFICATIONS	23-218
STRUCTURAL COLLAR - INSTALLATION	9-49
STRUCTURAL COLLAR - REMOVAL	9-49
STRUT - SECOND ROW - FOLD-IN-FLOOR - INSTALLATION, SEAT GAS	23-139
STRUT - SECOND ROW - FOLD-IN-FLOOR - REMOVAL, SEAT GAS	23-138
STRUT ASSEMBLY - ASSEMBLY	2-23
STRUT ASSEMBLY - DESCRIPTION	2-19
STRUT ASSEMBLY - DIAGNOSIS AND TESTING	2-20
STRUT ASSEMBLY - DISASSEMBLY	2-21
STRUT ASSEMBLY - INSTALLATION	2-25
STRUT ASSEMBLY - OPERATION	2-19
STRUT ASSEMBLY - REMOVAL	2-20
STUDS - FRONT - INSTALLATION, WHEEL MOUNTING	22-21
STUDS - FRONT - REMOVAL, WHEEL MOUNTING	22-21
STUDS - REAR - INSTALLATION, WHEEL MOUNTING	22-22
STUDS - REAR - REMOVAL, WHEEL MOUNTING	22-22
SUCTION LINE - INSTALLATION	24-107,24-97
SUCTION LINE - REMOVAL	24-106,24-96
SUN VISOR - INSTALLATION	23-99
SUN VISOR - REMOVAL	23-99
SUN VISOR SUPPORT - INSTALLATION	23-99
SUN VISOR SUPPORT - REMOVAL	23-99
SUNROOF - DESCRIPTION	23-169
SUNROOF ASSEMBLY - INSTALLATION	23-173
SUNROOF ASSEMBLY - REMOVAL	23-173
SUNROOF DIAGNOSIS AND TESTING, DIAGNOSIS AND TESTING	23-169
SUNROOF GLASS PANEL ADJUSTMENT, ADJUSTMENTS	23-173
SUNROOF MOTOR - INSTALLATION	23-174
SUNROOF MOTOR - REMOVAL	23-174
SUNROOF SWITCH - INSTALLATION	23-176
SUNROOF SWITCH - REMOVAL	23-176
SUNSHADE - INSTALLATION	23-173
SUNSHADE - REMOVAL	23-173
SUPPLEMENTAL CABIN HEATER, DIAGNOSIS AND TESTING	24-114
SUPPLY - PCM OUTPUT - OPERATION, 5 VOLT	8E-15
SUPPORT - INSTALLATION, LUMBAR	23-150
SUPPORT - INSTALLATION, SUN VISOR	23-99
SUPPORT - REMOVAL, LUMBAR	23-150
SUPPORT - REMOVAL, SUN VISOR	23-99
SUPPORT CYLINDER - INSTALLATION	23-43
SUPPORT CYLINDER - REMOVAL	23-42
SUPPORT PLATE - DRUM BRAKE - INSTALLATION	5-61
SUPPORT PLATE - DRUM BRAKE - REMOVAL	5-61
SUPPRESSION COMPONENTS - DESCRIPTION, RADIO NOISE	8A-15
SUPPRESSION COMPONENTS - OPERATION, RADIO NOISE	8A-15
SURFACE PREPARATION - STANDARD PROCEDURE, ENGINE GASKET	9-11,9-87
SUSPENSION - DESCRIPTION, FRONT	2-2
SUSPENSION - DESCRIPTION, REAR	2-26
SUSPENSION - OPERATION, FRONT	2-2
SUSPENSION AND STEERING - DIAGNOSIS AND TESTING	2-50
SUSPENSION FASTENER TORQUE, SPECIFICATIONS - FRONT	2-3
SUSPENSION FASTENER TORQUE, SPECIFICATIONS - REAR	2-28
SUSPENSION, SPECIAL TOOLS - FRONT	2-3
SUSPENSION, SPECIAL TOOLS - REAR	2-28
SWITCH - DESCRIPTION	8P-5
SWITCH - DESCRIPTION, B-PILLAR	8N-52
SWITCH - DESCRIPTION, BRAKE FLUID LEVEL	5-10
SWITCH - DESCRIPTION, BRAKE LAMP	8L-4
SWITCH - DESCRIPTION, EXTERIOR HANDLE	8N-10
SWITCH - DESCRIPTION, FULL OPEN	8N-11, 8N-52
SWITCH - DESCRIPTION, HEATED SEAT	8G-8
SWITCH - DESCRIPTION, HORN	8H-4
SWITCH - DESCRIPTION, MEMORY	8N-36
SWITCH - DESCRIPTION, OIL PRESSURE	9-144
SWITCH - DESCRIPTION, REAR WINDOW DEFOGGER	8G-4
SWITCH - DESCRIPTION, REAR WIPER/WASHER	8R-10
SWITCH - DESCRIPTION, SEAT	8N-34
SWITCH - DIAGNOSIS AND TESTING, BRAKE LAMP	8L-4
SWITCH - DIAGNOSIS AND TESTING, FAILED PARK	8R-2
SWITCH - DIAGNOSIS AND TESTING, FRONT WIPER/WASHER	8R-2
SWITCH - DIAGNOSIS AND TESTING, HEADLAMP	8L-13
SWITCH - DIAGNOSIS AND TESTING, MULTI-FUNCTION	8L-18
SWITCH - DIAGNOSIS AND TESTING, TRACTION CONTROL	5-94
SWITCH - EXPORT - DESCRIPTION, DOOR CYLINDER LOCK	8N-22
SWITCH - EXPORT - DESCRIPTION, POWER FOLDAWAY MIRROR	8N-29
SWITCH - EXPORT - INSTALLATION, HOOD AJAR	8Q-3
SWITCH - EXPORT - INSTALLATION, POWER FOLDAWAY MIRROR	8N-30
SWITCH - EXPORT - OPERATION, DOOR CYLINDER LOCK	8N-22
SWITCH - EXPORT - OPERATION, POWER FOLDAWAY MIRROR	8N-29
SWITCH - EXPORT - REMOVAL, HOOD AJAR	8Q-3
SWITCH - EXPORT - REMOVAL, POWER FOLDAWAY MIRROR	8N-29
SWITCH - INSTALLATION	8P-6
SWITCH - INSTALLATION, ADJUSTABLE PEDALS	5-11
SWITCH - INSTALLATION, B-PILLAR	8N-52
SWITCH - INSTALLATION, BRAKE FLUID LEVEL	5-11
SWITCH - INSTALLATION, BRAKE LAMP	8L-5
SWITCH - INSTALLATION, CENTER CONSOLE LAMP	8L-21
SWITCH - INSTALLATION, EXTERIOR HANDLE	8N-10
SWITCH - INSTALLATION, FULL OPEN	8N-11
SWITCH - INSTALLATION, GLOVE BOX LAMP	8L-22
SWITCH - INSTALLATION, HEADLAMP	8L-13
SWITCH - INSTALLATION, IGNITION	19-19
SWITCH - INSTALLATION, MULTI-FUNCTION	8L-18
SWITCH - INSTALLATION, OIL PRESSURE	9-144,9-56
SWITCH - INSTALLATION, SUNROOF	23-176
SWITCH - INSTALLATION, TRACTION CONTROL	5-95
SWITCH - INSTALLATION, WASHER FLUID LEVEL	8R-11
SWITCH - OPERATION	8P-5
SWITCH - OPERATION, B-PILLAR	8N-52
SWITCH - OPERATION, BRAKE FLUID LEVEL	5-10
SWITCH - OPERATION, BRAKE LAMP	8L-4
SWITCH - OPERATION, EXTERIOR HANDLE	8N-10
SWITCH - OPERATION, FULL OPEN	8N-11,8N-52
SWITCH - OPERATION, HEATED SEAT	8G-9
SWITCH - OPERATION, MEMORY	8N-36
SWITCH - OPERATION, OIL PRESSURE	9-144
SWITCH - OPERATION, REAR WINDOW DEFOGGER	8G-4
SWITCH - OPERATION, REAR WIPER/WASHER	8R-11
SWITCH - OPERATION, SEAT	8N-34
SWITCH - REMOVAL	8P-5
SWITCH - REMOVAL, ADJUSTABLE PEDALS	5-11
SWITCH - REMOVAL, B-PILLAR	8N-52
SWITCH - REMOVAL, BRAKE FLUID LEVEL	5-11
SWITCH - REMOVAL, BRAKE LAMP	8L-5
SWITCH - REMOVAL, CENTER CONSOLE LAMP	8L-21
SWITCH - REMOVAL, EXTERIOR HANDLE	8N-10
SWITCH - REMOVAL, FULL OPEN	8N-11
SWITCH - REMOVAL, GLOVE BOX LAMP	8L-22
SWITCH - REMOVAL, HEADLAMP	8L-13
SWITCH - REMOVAL, IGNITION	19-17
SWITCH - REMOVAL, MULTI-FUNCTION	8L-18
SWITCH - REMOVAL, OIL PRESSURE	9-144, 9-56
SWITCH - REMOVAL, SUNROOF	23-176
SWITCH - REMOVAL, TRACTION CONTROL	5-95
SWITCH - REMOVAL, WASHER FLUID LEVEL	8R-11
SWITCH ASSY - DESCRIPTION, SOLENOID/PRESSURE	21-117,21-268
SWITCH ASSY - INSTALLATION, SOLENOID/PRESSURE	21-119,21-270
SWITCH ASSY - OPERATION, SOLENOID/PRESSURE	21-118,21-268
SWITCH ASSY - REMOVAL, SOLENOID/PRESSURE	21-118,21-269
SWITCH, DIAGNOSIS AND TESTING - DOOR LOCK	8N-23
SWITCH, DIAGNOSIS AND TESTING - DRIVER HEATED SEAT	8G-9
SWITCH, DIAGNOSIS AND TESTING - DRIVER SEAT	8N-34
SWITCH, DIAGNOSIS AND TESTING - MEMORY	8N-37
SWITCH, DIAGNOSIS AND TESTING - REMOTE	8N-30
SWITCH, DIAGNOSIS AND TESTING - WINDOW	8N-63
SWITCH, EXPORT - DOOR CYLINDER LOCK	8N-22
SWITCHES - DESCRIPTION, REMOTE	8A-16
SWITCHES - OPERATION, REMOTE	8A-16
SWITCHES, DIAGNOSIS AND TESTING - REMOTE	8A-16
SYMBOLS - DESCRIPTION, INTERNATIONAL	0-1
SYNCHRONIZING CABLE ADJUSTMENT, INSTALLATION	23-105,23-147
TAIL LAMP - INSTALLATION	8L-19
TAIL LAMP - REMOVAL	8L-18
TAIL LAMP UNIT - INSTALLATION	8L-19
TAIL LAMP UNIT - REMOVAL	8L-19
TANK - DESCRIPTION, FUEL	14-12
TANK - OPERATION, FUEL	14-12

Description	Group-Page
TANK - STANDARD PROCEDURE, DRAINING FUEL	14-2
TANK FILLER TUBE - INSTALLATION, FUEL	14-17
TANK FILLER TUBE - REMOVAL, FUEL	14-16
TAPE ATTACHED - INSTALLATION, EXTERIOR NAME PLATES	23-51
TAPE ATTACHED - REMOVAL, EXTERIOR NAME PLATES	23-51
TASK MANAGER - DESCRIPTION	25-25
TASK MANAGER - OPERATION	25-25
TELECOMMUNICATION, DIAGNOSIS AND TESTING	8T-1
TEMP SENSOR - DESCRIPTION, AMBIENT	8M-12
TEMP SENSOR - OPERATION, AMBIENT	8M-12
TEMPERATURE CONTROL, DESCRIPTION - AUTOMATIC	24-3
TEMPERATURE CONTROL, OPERATION - AUTOMATIC	24-5
TEMPERATURE CONTROL SYSTEM, OPERATION - AUTOMATIC	24-114
TEMPERATURE CONTROL SYSTEM, OPERATION - MANUAL	24-113
TEMPERATURE SENSOR - 2.4L - DESCRIPTION, ENGINE COOLANT	7-21
TEMPERATURE SENSOR - 2.4L - INSTALLATION, ENGINE COOLANT	7-21
TEMPERATURE SENSOR - 2.4L - REMOVAL, ENGINE COOLANT	7-21
TEMPERATURE SENSOR - 3.3/3.8L - DESCRIPTION, ENGINE COOLANT	7-21
TEMPERATURE SENSOR - 3.3/3.8L - INSTALLATION, ENGINE COOLANT	7-23
TEMPERATURE SENSOR - 3.3/3.8L - REMOVAL, ENGINE COOLANT	7-21
TEMPERATURE SENSOR - DESCRIPTION, BATTERY	8F-24
TEMPERATURE SENSOR - DESCRIPTION, EVAPORATOR	24-26
TEMPERATURE SENSOR - DESCRIPTION, INFRARED	24-28
TEMPERATURE SENSOR - DESCRIPTION, INLET AIR	14-34
TEMPERATURE SENSOR - OPERATION, BATTERY	8F-24
TEMPERATURE SENSOR - OPERATION, EVAPORATOR	24-27
TEMPERATURE SENSOR - OPERATION, INFRARED	24-28
TEMPERATURE SENSOR - REMOVAL, BATTERY	8F-24
TEMPERATURE SENSOR - SPECIFICATIONS, BATTERY	8F-23
TEMPERATURE SENSOR CIRCUIT, DIAGNOSIS AND TESTING - AMBIENT	8M-12
TEMPERATURE SENSOR, DIAGNOSIS AND TESTING - AMBIENT	8M-12
TENSION - STANDARD PROCEDURE, CHECKING POWER STEERING BELT	7-8
TENSION RELEASE - STANDARD PROCEDURE, PARKING BRAKE AUTOMATIC ADJUSTER	5-63
TENSION RESET - STANDARD PROCEDURE, PARKING BRAKE AUTOMATIC ADJUSTER	5-64
TENSION SENSOR - DESCRIPTION, BELT	8O-8
TENSION SENSOR - OPERATION, BELT	8O-9
TENSION, SPECIFICATIONS - ACCESSORY DRIVE BELT	7-5
TENSIONER - 2.4L - INSTALLATION, BELT	7-11
TENSIONER - 2.4L - REMOVAL, BELT	7-11
TENSIONER - 3.3/3.8L - INSTALLATION, BELT	7-12
TENSIONER - 3.3/3.8L - REMOVAL, BELT	7-12
TENSIONER - DESCRIPTION, SEAT BELT	8O-43
TENSIONER - OPERATION, SEAT BELT	8O-43
TENSIONER & PULLEY - INSTALLATION, TIMING BELT	9-70
TENSIONER & PULLEY - REMOVAL, TIMING BELT	9-69
TERMINAL - INSTALLATION	8W-01-14
TERMINAL - REMOVAL	8W-01-14
TEST - DIAGNOSIS AND TESTING, CONTROL CIRCUIT	8F-33
TEST - DIAGNOSIS AND TESTING, COOLING SYSTEM LEAK	7-2
TEST - DIAGNOSIS AND TESTING, CYLINDER COMBUSTION PRESSURE LEAKAGE	9-85,9-9
TEST - DIAGNOSIS AND TESTING, CYLINDER COMPRESSION PRESSURE	9-85,9-9
TEST - DIAGNOSIS AND TESTING, FEED CIRCUIT	8F-36
TEST - DIAGNOSIS AND TESTING, FEED CIRCUIT RESISTANCE	8F-35
TEST - DIAGNOSIS AND TESTING, POWER STEERING SYSTEM FLOW AND PRESSURE	19-1
TEST - DIAGNOSIS AND TESTING, ROAD	8P-3
TEST - DIAGNOSIS AND TESTING, ROAD	21-150,21-5
TEST - DIAGNOSIS AND TESTING, STARTING SYSTEM	8F-31
TEST, DIAGNOSIS AND TESTING - A/C COOL DOWN	24-6
TEST, DIAGNOSIS AND TESTING - A/C PERFORMANCE	24-7
TEST, DIAGNOSIS AND TESTING - HEATER PERFORMANCE	24-10
TEST, DIAGNOSIS AND TESTING - SYSTEM CHARGE LEVEL	24-67
TEST MODE, OPERATION - DRB III® STATE DISPLAY	25-10
TEST, STANDARD PROCEDURE - IGNITION-OFF DRAW	8F-13
TEST, STANDARD PROCEDURE - OPEN-CIRCUIT VOLTAGE	8F-13
TESTER, STANDARD PROCEDURE - MICRO 420 BATTERY	8F-15
TESTS - DIAGNOSIS AND TESTING, CLUTCH AIR PRESSURE	21-153,21-8
TESTS - DIAGNOSIS AND TESTING, HYDRAULIC PRESSURE	21-150,21-6
THEFT SECURITY - DESCRIPTION, VEHICLE	8Q-1
THEFT SECURITY - OPERATION, VEHICLE	8Q-1
THEFT SECURITY SYSTEM - DIAGNOSIS AND TESTING, VEHICLE	8Q-3
THERMOSTAT - 2.4L - INSTALLATION, ENGINE COOLANT	7-24
THERMOSTAT - 2.4L - REMOVAL, ENGINE COOLANT	7-24
THERMOSTAT - 3.3/3.8L - INSTALLATION, ENGINE COOLANT	7-25
THERMOSTAT - 3.3/3.8L - REMOVAL, ENGINE COOLANT	7-24
THERMOSTAT - DESCRIPTION, ENGINE COOLANT	7-23
THERMOSTAT - DIAGNOSIS AND TESTING, ENGINE COOLANT	7-23
THERMOSTAT - OPERATION, ENGINE COOLANT	7-23
THIRD ROW - FOLD-IN-FLOOR - INSTALLATION, HEADREST SLEEVE	23-153
THIRD ROW - FOLD-IN-FLOOR - INSTALLATION, SEAT	23-154
THIRD ROW - FOLD-IN-FLOOR - INSTALLATION, SEAT BACK COVER/ FOAM	23-156
THIRD ROW - FOLD-IN-FLOOR - INSTALLATION, SEAT BACK FRAME	23-157
THIRD ROW - FOLD-IN-FLOOR - INSTALLATION, SEAT BACKSTOW STRAP	23-158
THIRD ROW - FOLD-IN-FLOOR - INSTALLATION, SEAT CUSHION COVER/FOAM	23-159
THIRD ROW - FOLD-IN-FLOOR - REMOVAL, HEADREST SLEEVE	23-152
THIRD ROW - FOLD-IN-FLOOR - REMOVAL, SEAT	23-153
THIRD ROW - FOLD-IN-FLOOR - REMOVAL, SEAT BACK COVER/FOAM	23-155
THIRD ROW - FOLD-IN-FLOOR - REMOVAL, SEAT BACK FRAME	23-156
THIRD ROW - FOLD-IN-FLOOR - REMOVAL, SEAT BACKSTOW STRAP	23-158
THIRD ROW - FOLD-IN-FLOOR - REMOVAL, SEAT CUSHION COVER/ FOAM	23-159
THIRD ROW - INSTALLATION, BENCH SEAT RISER	23-145
THIRD ROW - REMOVAL, BENCH SEAT RISER	23-145
THIRD ROW -FOLD-IN-FLOOR - INSTALLATION, SEAT BACK PANEL	23-158
THIRD ROW -FOLD-IN-FLOOR - REMOVAL, SEAT BACK PANEL	23-158
THREAD REPAIR - DESCRIPTION, FRONT CRADLE CROSSMEMBER	13-14
THREAD REPAIR - STANDARD PROCEDURE, MANIFOLD STRIPPED	9-147
THREADS - STANDARD PROCEDURE, REPAIR OF DAMAGED OR WORN	9-10,9-88
THREE PASSENGER BENCH - INSTALLATION, SEAT BELT BUCKLE - SECOND ROW	8O-40
THREE PASSENGER BENCH - REMOVAL, SEAT BELT BUCKLE - SECOND ROW	8O-40
THREE ZONE, DESCRIPTION - MANUAL	24-2
THREE ZONE, OPERATION - MANUAL	24-5
THROTTLE BODY - DESCRIPTION	14-39
THROTTLE BODY - INSTALLATION	14-40
THROTTLE BODY - OPERATION	14-39
THROTTLE BODY - REMOVAL	14-40
THROTTLE CONTROL CABLE - INSTALLATION	14-40
THROTTLE CONTROL CABLE - REMOVAL	14-40
THROTTLE POSITION SENSOR - DESCRIPTION	14-40
THROTTLE POSITION SENSOR - OPERATION	14-41
TIE ROD - INSTALLATION, OUTER	19-35
TIE ROD - REMOVAL, OUTER	19-34
TIMING BELT - INSTALLATION	9-67
TIMING BELT - REMOVAL	9-65
TIMING BELT COVER(S) - INSTALLATION	9-64
TIMING BELT COVER(S) - REMOVAL	9-63
TIMING BELT TENSIONER & PULLEY - INSTALLATION	9-70
TIMING BELT TENSIONER & PULLEY - REMOVAL	9-69
TIMING CHAIN AND CAMSHAFT SPROCKET - INSTALLATION	9-160
TIMING CHAIN AND CAMSHAFT SPROCKET - REMOVAL	9-159
TIMING CHAIN COVER - INSTALLATION	9-157
TIMING CHAIN COVER - REMOVAL	9-156
TIMING CHAIN WEAR - STANDARD PROCEDURE, MEASURING	9-155
TIMING VERIFICATION - STANDARD PROCEDURE, VALVE	9-155
TIRE - DESCRIPTION	22-13
TIRE AND WHEEL ASSEMBLY (ALUMINUM WHEEL) - INSTALLATION	22-8
TIRE AND WHEEL ASSEMBLY (ALUMINUM WHEEL) - REMOVAL	22-8
TIRE AND WHEEL ASSEMBLY (STEEL WHEEL) - INSTALLATION	22-8
TIRE AND WHEEL ASSEMBLY (STEEL WHEEL) - REMOVAL	22-8
TIRE AND WHEEL BALANCE - STANDARD PROCEDURE	22-5
TIRE AND WHEEL MATCH MOUNTING - STANDARD PROCEDURE	22-7
TIRE AND WHEEL ROTATION - STANDARD PROCEDURE	22-7
TIRE AND WHEEL VIBRATION - DIAGNOSIS AND TESTING	22-1
TIRE INFLATION PRESSURES - STANDARD PROCEDURE	22-16
TIRE LEAK REPAIRING - STANDARD PROCEDURE	22-17
TIRE NOISE - DIAGNOSIS AND TESTING	22-14
TIRE PRESSURE FOR HIGH SPEED OPERATION - STANDARD PROCEDURE	22-17
TIRE PRESSURE MONITORING - DESCRIPTION	22-9
TIRE PRESSURE MONITORING - OPERATION	22-10
TIRE PRESSURE SENSOR - DIAGNOSIS AND TESTING	22-11
TIRE (TEMPORARY) - DESCRIPTION, SPARE	22-14
TIRE WEAR PATTERNS - DIAGNOSIS AND TESTING	22-16
TIRES - CLEANING	22-18
TIRES - DESCRIPTION, RADIAL-PLY	22-13
TIRES - DESCRIPTION, REPLACEMENT	22-14
TIRE/VEHICLE LEAD - DIAGNOSIS AND TESTING	22-14

Description	Group-Page
TO CYLINDER BORE FITTING - STANDARD PROCEDURE, PISTON	9-44
TO FILLER NECK SEAL - DIAGNOSIS AND TESTING, RADIATOR CAP	7-28
TO GROUND - STANDARD PROCEDURE, TESTING FOR A SHORT	8W-01-9
TO GROUND ON FUSES POWERING SEVERAL LOADS - STANDARD PROCEDURE, TESTING FOR A SHORT	8W-01-10
TO USE WIRING DIAGRAMS - DESCRIPTION, HOW	8W-01-1
TONE WHEEL - INSPECTION	5-94
TONE WHEEL RUNOUT, SPECIFICATIONS	5-91
TOOLS - 2.4L ENGINE, SPECIAL	9-21
TOOLS - 3.3/3.8L ENGINE, SPECIAL	9-98
TOOLS - 41TE AUTOMATIC TRANSAXLE, SPECIAL	21-213
TOOLS - BASE BRAKE SYSTEM, SPECIAL	5-10
TOOLS - BATTERY SYSTEM SPECIAL TOOLS, SPECIAL	8F-7
TOOLS - BODY, SPECIAL	23-13
TOOLS - COOLING SYSTEM, SPECIAL	7-6
TOOLS - EXHAUST SYSTEM, SPECIAL	11-4
TOOLS - FRONT SUSPENSION, SPECIAL	2-3
TOOLS - FUEL, SPECIAL	14-27,14-4
TOOLS - OVERHEAD CONSOLE, SPECIAL	8M-7
TOOLS - POWER DISTRIBUTION SYSTEMS, SPECIAL	8W-97-1
TOOLS - POWER STEERING GEAR, SPECIAL	19-34
TOOLS - POWER STEERING PUMP, SPECIAL	19-44
TOOLS - POWER STEERING, SPECIAL	19-9
TOOLS - REAR SUSPENSION, SPECIAL	2-28
TOOLS - WIRING/TERMINAL, SPECIAL	8W-01-10
TOOLS, SCHEMATICS AND DIAGRAMS - SPECIAL	21-68
TOOLS, SPECIAL TOOLS - BATTERY SYSTEM SPECIAL	8F-7
TOOLS, SPECIFICATIONS - SPECIAL	8F-24
TOP COVER - INSTALLATION, INSTRUMENT PANEL	23-72
TOP COVER - REMOVAL, INSTRUMENT PANEL	23-72
TOP PAD ASSEMBLY - INSTALLATION, INSTRUMENT PANEL	23-77
TOP PAD ASSEMBLY - REMOVAL, INSTRUMENT PANEL	23-77
TORQUES, SPECIFICATIONS	8F-36
TOUCH-UP - DESCRIPTION, PAINTED	23-101
TOWING - STANDARD PROCEDURE	0-26
TPM - CAUTION, SENSOR	22-11
TPM - DESCRIPTION, SENSOR	22-10
TPM - INSTALLATION, SENSOR	22-11
TPM - OPERATION, SENSOR	22-10
TPM - REMOVAL, SENSOR	22-11
TRACK - DESCRIPTION, POWER SEAT	8N-37
TRACK - INSTALLATION, BENCH SEAT	23-148
TRACK - OPERATION, POWER SEAT	8N-38
TRACK & RACK - DESCRIPTION, LOWER DRIVE UNIT	8N-57
TRACK & RACK - INSTALLATION, LOWER DRIVE UNIT	8N-58
TRACK & RACK - OPERATION, LOWER DRIVE UNIT	8N-57
TRACK & RACK - REMOVAL, LOWER DRIVE UNIT	8N-57
TRACK - REAR COVER - INSTALLATION, FRONT SEAT	23-128
TRACK - REAR COVER - REMOVAL, FRONT SEAT	23-128
TRACK - REMOVAL, BENCH SEAT	23-148
TRACK ADJUSTER/MANUAL - OCS - INSTALLATION, FRONT SEAT	23-128
TRACK ADJUSTER/MANUAL - OCS - REMOVAL, FRONT SEAT	23-126
TRACK ADJUSTER/POWER - OCS - INSTALLATION, FRONT SEAT	23-125
TRACK ADJUSTER/POWER - OCS - REMOVAL, FRONT SEAT	23-124
TRACK BAR - DESCRIPTION	2-45
TRACK BAR - INSTALLATION	2-46
TRACK BAR - OPERATION	2-46
TRACK BAR - REMOVAL	2-46
TRACK, DIAGNOSIS AND TESTING - POWER SEAT	8N-38
TRACK MANUAL ADJUSTER - INSTALLATION, FRONT SEAT	23-126
TRACK MANUAL ADJUSTER - REMOVAL, FRONT SEAT	23-125
TRACK POWER ADJUSTER - INSTALLATION, FRONT SEAT	23-124
TRACK POWER ADJUSTER - REMOVAL, FRONT SEAT	23-124
TRACK REAR COVER - OCS - INSTALLATION, FRONT SEAT	23-129
TRACK REAR COVER - OCS - REMOVAL, FRONT SEAT	23-129
TRACTION CONTROL SWITCH - DIAGNOSIS AND TESTING	5-94
TRACTION CONTROL SWITCH - INSTALLATION	5-95
TRACTION CONTROL SWITCH - REMOVAL	5-95
TRACTION CONTROL SYSTEM - DESCRIPTION	5-88
TRACTION CONTROL SYSTEM - OPERATION	5-89
TRANSAXLE - DESCRIPTION, 40TE AUTOMATIC	21-2
TRANSAXLE - DESCRIPTION, 41TE AUTOMATIC	21-147
TRANSAXLE - OPERATION, 40TE AUTOMATIC	21-4
TRANSAXLE - OPERATION, 41TE AUTOMATIC	21-149
TRANSAXLE - SPECIFICATIONS, 41TE	21-211, 21-66
TRANSAXLE FLUID - DESCRIPTION, AUTOMATIC/MANUAL	0-4
TRANSAXLE GENERAL DIAGNOSIS - DIAGNOSIS AND TESTING, 4XTE.	21-149,21-5
TRANSAXLE HYDRAULIC SCHEMATICS, SCHEMATICS AND DIAGRAMS - 4XTE	21-199, 21-54
TRANSAXLE, SPECIAL TOOLS - 41TE AUTOMATIC	21-213
TRANSDUCER - DESCRIPTION, A/C PRESSURE	24-20
TRANSDUCER - OPERATION, A/C PRESSURE	24-20
TRANSDUCER, DIAGNOSIS AND TESTING - A/C PRESSURE	24-21
TRANSFER UNIT FLUID - DESCRIPTION, AWD POWER	0-6
TRANSMISSION CONTROL RELAY - DESCRIPTION	21-130,21-281
TRANSMISSION CONTROL RELAY - OPERATION	21-130,21-281
TRANSMISSION COOLER LINE QUICK CONNECT FITTING DISASSEMBLY/ ASSEMBLY - STANDARD PROCEDURE	7-38
TRANSMISSION OIL COOLER - DESCRIPTION	7-39
TRANSMISSION OIL COOLER - INSPECTION	7-39
TRANSMISSION OIL COOLER LINES - INSTALLATION	7-40
TRANSMISSION OIL COOLER LINES - REMOVAL	7-39
TRANSMISSION RANGE SENSOR - DESCRIPTION	21-130,21-281
TRANSMISSION RANGE SENSOR - INSTALLATION	21-131,21-282
TRANSMISSION RANGE SENSOR - OPERATION	21-131,21-282
TRANSMISSION RANGE SENSOR - REMOVAL	21-131,21-282
TRANSMITTER - DESCRIPTION, UNIVERSAL	8M-11
TRANSMITTER CODES, STANDARD PROCEDURE - ERASING	8M-12
TRANSMITTER CODES, STANDARD PROCEDURE - SETTING	8M-12
TRANSMITTER, DIAGNOSIS AND TESTING - KEYLESS ENTRY	8N-24
TRANSMITTER, DIAGNOSIS AND TESTING - UNIVERSAL	8M-11
TRANSMITTER PROGRAMMING - STANDARD PROCEDURE, REMOTE KEYLESS ENTRY	8N-24
TRANSMITTER RANGE - SPECIFICATIONS	8N-24
TRANSPONDER KEY - DESCRIPTION	8Q-6
TRANSPONDER KEY - OPERATION	8Q-6
TRANSPONDER PROGRAMMING - STANDARD PROCEDURE	8Q-6
TRANSVERSE BRACKET - DESCRIPTION	8N-19
TRANSVERSE BRACKET - INSTALLATION	8N-19
TRANSVERSE BRACKET - OPERATION	8N-19
TRANSVERSE BRACKET - REMOVAL	8N-19
TRAY - DESCRIPTION, BATTERY	8F-19
TRAY - INSTALLATION, BATTERY	8F-20
TRAY - INSTALLATION, FLOOR CONSOLE BASE	23-89
TRAY - REMOVAL, BATTERY	8F-19
TRAY - REMOVAL, FLOOR CONSOLE BASE	23-89
TREAD WEAR INDICATORS - DIAGNOSIS AND TESTING	22-16
TRIM - INSTALLATION, A-PILLAR	23-79
TRIM - INSTALLATION, A-PILLAR LOWER EXTENSION	23-79
TRIM - INSTALLATION, B-PILLAR LOWER	23-80
TRIM - INSTALLATION, B-PILLAR UPPER	23-80
TRIM - INSTALLATION, COWL	23-88
TRIM - INSTALLATION, C-PILLAR	23-88
TRIM - INSTALLATION, REAR HEADER	23-96
TRIM - REMOVAL, A-PILLAR	23-79
TRIM - REMOVAL, A-PILLAR LOWER EXTENSION	23-79
TRIM - REMOVAL, B-PILLAR LOWER	23-79
TRIM - REMOVAL, B-PILLAR UPPER	23-80
TRIM - REMOVAL, COWL	23-88
TRIM - REMOVAL, C-PILLAR	23-88
TRIM - REMOVAL, REAR HEADER	23-96
TRIM BOLSTER - INSTALLATION, QUARTER	23-95
TRIM BOLSTER - REMOVAL, QUARTER	23-95
TRIM CARE, CLEANING - WHEEL AND WHEEL	22-19
TRIM PANEL - INSTALLATION	23-20,23-34, 23-43
TRIM PANEL - INSTALLATION, LEFT D-PILLAR	23-94
TRIM PANEL - INSTALLATION, LEFT QUARTER	23-94
TRIM PANEL - INSTALLATION, RIGHT D-PILLAR	23-98
TRIM PANEL - INSTALLATION, RIGHT QUARTER	23-97
TRIM PANEL - REMOVAL	23-20,23-34,23-43
TRIM PANEL - REMOVAL, LEFT D-PILLAR	23-94
TRIM PANEL - REMOVAL, LEFT QUARTER	23-94
TRIM PANEL - REMOVAL, RIGHT D-PILLAR	23-97
TRIM PANEL - REMOVAL, RIGHT QUARTER	23-97
TRIM PLATE - INSTALLATION, DOOR SILL	23-89
TRIM PLATE - REMOVAL, DOOR SILL	23-89
TRIM RING AND COVER - FOLD-IN-FLOOR - INSTALLATION, CARPET	23-84
TRIM RING AND COVER - FOLD-IN-FLOOR - REMOVAL, CARPET	23-84
TRIP DEFINITION, DESCRIPTION	25-1
TROUBLE CODES - STANDARD PROCEDURE, OBTAINING DIAGNOSTIC	8E-15
TUB CARPET INSERT - FOLD-IN-FLOOR - INSTALLATION, SECOND ROW FLOOR	23-98
TUB CARPET INSERT - FOLD-IN-FLOOR - REMOVAL, SECOND ROW FLOOR	23-98
TUB CARPETS INSERT - FOLD-IN-FLOOR - INSTALLATION, REAR FLOOR	23-96
TUB CARPETS INSERT - FOLD-IN-FLOOR - REMOVAL, REAR FLOOR	23-95
TUBE - 2.4L - DESCRIPTION, WATER PUMP INLET	7-36
TUBE - 2.4L - INSTALLATION, WATER PUMP INLET	7-36
TUBE - 2.4L - REMOVAL, WATER PUMP INLET	7-36
TUBE - 3.3/3.8L - INSTALLATION, WATER PUMP INLET	7-37
TUBE - 3.3/3.8L - REMOVAL, WATER PUMP INLET	7-37
TUBE - INSTALLATION, DRAIN	23-172
TUBE - INSTALLATION, EXHAUST	24-116
TUBE - INSTALLATION, FUEL TANK FILLER	14-17

Description	Group-Page
TUBE - REMOVAL, DRAIN	23-172
TUBE - REMOVAL, EXHAUST	24-116
TUBE - REMOVAL, FUEL TANK FILLER	14-16
TUBES AND HOSES - DESCRIPTION, BRAKE	5-14
TUBES AND HOSES - INSPECTION, BRAKE	5-14
TUBES AND HOSES - OPERATION, BRAKE	5-14
TUBES, INSTALLATION - FRONT HEATER CORE	24-85
TUBES, INSTALLATION - UNDERBODY HEATER	24-112
TUBES, REMOVAL - FRONT HEATER CORE	24-84
TUBES, REMOVAL - UNDERBODY HEATER	24-109
TUBING AND FITTINGS, STANDARD PROCEDURE - HANDLING	24-69
TUMBLER - FOLD-IN-FLOOR - INSTALLATION, FLOOR CONSOLE KEY LOCK	23-90
TUMBLER - FOLD-IN-FLOOR - REMOVAL, FLOOR CONSOLE KEY LOCK	23-90
TURN SIGNAL SYSTEM - DESCRIPTION	8L-17
TURN SIGNAL SYSTEM - OPERATION	8L-17
UNDER SEAT STORAGE BIN - INSTALLATION	23-149
UNDER SEAT STORAGE BIN - REMOVAL	23-149
UNDER SEAT STORAGE BIN GUIDE - INSTALLATION	23-150
UNDER SEAT STORAGE BIN GUIDE - REMOVAL	23-150
UNDER SEAT STORAGE BIN LOCK/LATCH - INSTALLATION	23-150
UNDER SEAT STORAGE BIN LOCK/LATCH - REMOVAL	23-150
UNDERBODY HEATER TUBES, INSTALLATION	24-112
UNDERBODY HEATER TUBES, REMOVAL	24-109
UNDERBODY LINES - DESCRIPTION	24-108
UNDERBODY LINES - OPERATION	24-108
UNDERBODY REFRIGERANT LINES, INSTALLATION	24-112
UNDERBODY REFRIGERANT LINES, REMOVAL	24-110
UNIT - DESCRIPTION, LOWER DRIVE	8N-53
UNIT - EXPORT - INSTALLATION, HEADLAMP	8L-17
UNIT - EXPORT - REMOVAL, HEADLAMP	8L-17
UNIT - INSTALLATION, CENTER HIGH MOUNTED STOP LAMP	8L-6
UNIT - INSTALLATION, HEADLAMP	8L-15
UNIT - INSTALLATION, HEATER	24-122
UNIT - INSTALLATION, LOWER DRIVE	8N-54
UNIT - INSTALLATION, TAIL LAMP	8L-19
UNIT - OPERATION, LOWER DRIVE	8N-53
UNIT - REMOVAL, CENTER HIGH MOUNTED STOP LAMP	8L-6
UNIT - REMOVAL, HEADLAMP	8L-15
UNIT - REMOVAL, HEATER	24-121
UNIT - REMOVAL, LOWER DRIVE	8N-53
UNIT - REMOVAL, TAIL LAMP	8L-19
UNIT / SENSOR - DESCRIPTION, FUEL LEVEL SENDING	14-5
UNIT / SENSOR - INSTALLATION, FUEL LEVEL SENDING	14-6
UNIT / SENSOR - OPERATION, FUEL LEVEL SENDING	14-5
UNIT / SENSOR - REMOVAL, FUEL LEVEL SENDING	14-5
UNIT ALIGNMENT - EXPORT - STANDARD PROCEDURE, FRONT FOG LAMP	8L-9
UNIT ALIGNMENT - EXPORT - STANDARD PROCEDURE, HEADLAMP	8L-15
UNIT ALIGNMENT - STANDARD PROCEDURE, FRONT FOG LAMP	8L-9
UNIT ALIGNMENT - STANDARD PROCEDURE, HEADLAMP	8L-14
UNIT FLUID - DESCRIPTION, AWD POWER TRANSFER	0-6
UNIT TRACK & RACK - DESCRIPTION, LOWER DRIVE	8N-57
UNIT TRACK & RACK - INSTALLATION, LOWER DRIVE	8N-58
UNIT TRACK & RACK - OPERATION, LOWER DRIVE	8N-57
UNIT TRACK & RACK - REMOVAL, LOWER DRIVE	8N-57
UNIVERSAL TRANSMITTER - DESCRIPTION	8M-11
UNIVERSAL TRANSMITTER, DIAGNOSIS AND TESTING	8M-11
UPPER - INSPECTION, INTAKE MANIFOLD	9-61
UPPER - INSTALLATION, INTAKE MANIFOLD	9-61
UPPER - INSTALLATION, SHROUD	19-22
UPPER - REMOVAL, INTAKE MANIFOLD	9-60
UPPER - REMOVAL, SHROUD	19-22
UPPER HINGE - INSTALLATION	23-36
UPPER HINGE - REMOVAL	23-36
UPPER INTAKE MANIFOLD - INSTALLATION	9-149
UPPER INTAKE MANIFOLD - REMOVAL	9-148
UPPER RADIATOR CROSSMEMBER - INSTALLATION	23-56
UPPER RADIATOR CROSSMEMBER - REMOVAL	23-56
UPPER TRIM - INSTALLATION, B-PILLAR	23-80
UPPER TRIM - REMOVAL, B-PILLAR	23-80
UPSTREAM 1/1 - 2.4L - INSTALLATION	14-38
UPSTREAM 1/1 - 2.4L - REMOVAL	14-37
UPSTREAM 1/1 - 3.3/3.8L - INSTALLATION	14-39
UPSTREAM 1/1 - 3.3/3.8L - REMOVAL	14-38
USE WIRING DIAGRAMS - DESCRIPTION, HOW TO	8W-01-1
USING PLASTIGAGE - STANDARD PROCEDURE, MEASURING BEARING CLEARANCE	9-12,9-86
VAC LEAK DETECTION ASSY - INSTALLATION, NATURAL	25-14
VAC LEAK DETECTION ASSY - REMOVAL, NATURAL	25-14
VACUUM PORT REPAIR - STANDARD PROCEDURE, INTAKE MANIFOLD	9-148
VACUUM RESERVOIR - DESCRIPTION	8P-6
VACUUM RESERVOIR - INSTALLATION	8P-6
VACUUM RESERVOIR - OPERATION	8P-6
VACUUM RESERVOIR - REMOVAL	8P-6
VALVE - DESCRIPTION	25-23
VALVE - DESCRIPTION, A/C EXPANSION	24-100
VALVE - DESCRIPTION, EXPANSION	24-81
VALVE - DESCRIPTION, PCV	25-18
VALVE - INSTALLATION, OIL PRESSURE RELIEF	9-144
VALVE - OPERATION	25-23
VALVE - OPERATION, A/C EXPANSION	24-100
VALVE - OPERATION, EXPANSION	24-81
VALVE - OPERATION, PCV	25-18
VALVE - REMOVAL, OIL PRESSURE RELIEF	9-143
VALVE BODY - ASSEMBLY	21-139,21-291
VALVE BODY - DESCRIPTION	21-132,21-283
VALVE BODY - DISASSEMBLY	21-135,21-286
VALVE BODY - INSTALLATION	21-144,21-295
VALVE BODY - OPERATION	21-132,21-283
VALVE BODY - REMOVAL	21-133,21-284
VALVE CORE - DESCRIPTION, SERVICE PORT	24-95
VALVE CORE - INSTALLATION, SERVICE PORT	24-95
VALVE CORE - REMOVAL, SERVICE PORT	24-95
VALVE, DESCRIPTION - HIGH PRESSURE RELIEF	24-72
VALVE, DIAGNOSIS AND TESTING - FRONT A/C EXPANSION	24-82
VALVE, DIAGNOSIS AND TESTING - REAR A/C EXPANSION	24-101
VALVE (HEIGHT SENSING) - DESCRIPTION, PROPORTIONING	5-53
VALVE (HEIGHT SENSING) - DIAGNOSIS AND TESTING, PROPORTIONING	5-54
VALVE (HEIGHT SENSING) - INSTALLATION, PROPORTIONING	5-55
VALVE (HEIGHT SENSING) - OPERATION, PROPORTIONING	5-53
VALVE (HEIGHT SENSING) - REMOVAL, PROPORTIONING	5-55
VALVE, OPERATION - HIGH PRESSURE RELIEF	24-72
VALVE SEATS - STANDARD PROCEDURE, REFACING VALVES	9-107
VALVE SPRINGS - DESCRIPTION	9-109
VALVE SPRINGS - OPERATION	9-109
VALVE STEM SEALS - DESCRIPTION	9-114
VALVE STEM SEALS - INSTALLATION	9-115
VALVE STEM SEALS - REMOVAL	9-115
VALVE TIMING VERIFICATION - STANDARD PROCEDURE	9-155
VALVES - OPERATION, HYDRAULIC CIRCUITS	5-95
VALVES & SEATS - CLEANING, INTAKE/EXHAUST	9-108,9-33
VALVES & SEATS - DESCRIPTION, INTAKE/EXHAUST	9-107,9-33
VALVES & SEATS - INSPECTION, INTAKE/EXHAUST	9-108
VALVES & SEATS - INSTALLATION, INTAKE/EXHAUST	9-109
VALVES & SEATS - OPERATION, INTAKE/EXHAUST	9-107
VALVES & SEATS - REMOVAL, INTAKE/EXHAUST	9-108
VALVES AND VALVE SEATS - STANDARD PROCEDURE, REFACING	9-107
VANITY LAMP - INSTALLATION	8L-24
VANITY LAMP - REMOVAL	8L-24
VAPOR CANISTER - DESCRIPTION	25-19
VAPOR CANISTER - OPERATION	25-19
VARIABLE BRAKE PROPORTIONING - DESCRIPTION, ELECTRONIC	5-88
VARIABLE BRAKE PROPORTIONING - OPERATION, ELECTRONIC	5-89
VARIATION ADJUSTMENT, STANDARD PROCEDURE - COMPASS	8M-5
VEHICLE DOES NOT FILL - DIAGNOSIS AND TESTING	25-17
VEHICLE EMISSION CONTROL INFORMATION LABEL, DESCRIPTION	25-1
VEHICLE IDENTIFICATION - DESCRIPTION	23-1
VEHICLE INFO CENTER - DESCRIPTION, ELECTRONIC	8M-7
VEHICLE INFO CENTER - OPERATION, ELECTRONIC	8M-7
VEHICLE INFORMATION CENTER, DIAGNOSIS AND TESTING - ELECTRONIC	8M-8
VEHICLE INFORMATION CENTER PROGRAMMING, STANDARD PROCEDURE - ELECTRONIC	8M-8
VEHICLE THEFT SECURITY - DESCRIPTION	8Q-1
VEHICLE THEFT SECURITY - OPERATION	8Q-1
VEHICLE THEFT SECURITY SYSTEM - DIAGNOSIS AND TESTING	8Q-3
VENT WINDOW MOTOR, DIAGNOSIS AND TESTING	8N-62
VERIFICATION - STANDARD PROCEDURE, VALVE TIMING	9-155
VIBRATION - DIAGNOSIS AND TESTING, TIRE AND WHEEL	22-1
VIBRATION DAMPER - INSTALLATION	9-132, 9-49
VIBRATION DAMPER - REMOVAL	9-132,9-48
VIDEO SCREEN - DESCRIPTION	8A-20
VIDEO SCREEN - INSTALLATION	8A-20
VIDEO SCREEN - OPERATION	8A-20
VIDEO SCREEN - REMOVAL	8A-20
VIEW MIRROR - INSTALLATION, REAR	23-97
VIEW MIRROR - INSTALLATION, SIDE	23-60
VIEW MIRROR - REMOVAL, REAR	23-97
VIEW MIRROR - REMOVAL, SIDE	23-60
VISOR - INSTALLATION, SUN	23-99
VISOR - REMOVAL, SUN	23-99
VISOR SUPPORT - INSTALLATION, SUN	23-99
VISOR SUPPORT - REMOVAL, SUN	23-99
VOLT SUPPLY - PCM OUTPUT - OPERATION, 5	8E-15
VOLTAGE DROP - STANDARD PROCEDURE, TESTING FOR A	8W-01-10
VOLTAGE POTENTIAL - STANDARD PROCEDURE, TESTING OF	8W-01-9
VOLTAGE REGULATOR - DESCRIPTION	8F-30
VOLTAGE REGULATOR - OPERATION	8F-30
VOLTAGE TEST, STANDARD PROCEDURE - OPEN-CIRCUIT	8F-13
VTSS/SKIS INDICATOR LAMP - DESCRIPTION	8Q-8

Description	Group-Page
VTSS/SKIS INDICATOR LAMP - OPERATION	8Q-8
WARNING - A/C SYSTEM	24-66
WARNING - ENGINE COOLING SYSTEM	24-65
WARNING - INSTALLATION	23-162
WARNING - INSTALLATION	19-16
WARNING - REMOVAL	23-161
WARNING - REMOVAL	19-11
WARNING - SAFETY PRECAUTIONS AND WARNINGS	23-1
WARNING - WARNINGS	8O-5
WARNING - WARNINGS AND CAUTIONS	19-10, 19-26
WARNING - WINDSHIELD SAFETY PRECAUTIONS	23-161
WARNING, CHIME/BUZZER	8B-2
WARNING, DESCRIPTION	5-4
WARNING, DESCRIPTION	19-37
WARNING, LAMPS/LIGHTING - EXTERIOR	8L-3
WARNING, OPERATION	24-114
WARNINGS AND CAUTIONS, WARNING	19-10, 19-26
WARNINGS, GENERAL	8W-01-7
WARNINGS, WARNING	8O-5
WARNINGS, WARNING - SAFETY PRECAUTIONS	23-1
WASHER FLUID LEVEL SWITCH - INSTALLATION	8R-11
WASHER FLUID LEVEL SWITCH - REMOVAL	8R-11
WASHER HOSES - INSTALLATION	8R-12
WASHER HOSES - REMOVAL	8R-11
WASHER PUMP MOTOR - INSTALLATION	8R-12
WASHER PUMP MOTOR - REMOVAL	8R-12
WASHER RESERVOIR - INSTALLATION	8R-13
WASHER RESERVOIR - REMOVAL	8R-12
WASHER SYSTEM - DIAGNOSIS AND TESTING	8R-5
WATER CHANNEL - INSTALLATION	23-174
WATER CHANNEL - REMOVAL	23-174
WATER LEAKS, DIAGNOSIS AND TESTING	23-1
WATER PUMP - 2.4L - CLEANING	7-32
WATER PUMP - 2.4L - DESCRIPTION	7-32
WATER PUMP - 2.4L - INSPECTION	7-32
WATER PUMP - 2.4L - INSTALLATION	7-32
WATER PUMP - 2.4L - REMOVAL	7-32
WATER PUMP - 3.3/3.8L - CLEANING	7-35
WATER PUMP - 3.3/3.8L - DESCRIPTION	7-34
WATER PUMP - 3.3/3.8L - INSPECTION	7-35
WATER PUMP - 3.3/3.8L - INSTALLATION	7-35
WATER PUMP - 3.3/3.8L - REMOVAL	7-34
WATER PUMP INLET TUBE - 2.4L - DESCRIPTION	7-36
WATER PUMP INLET TUBE - 2.4L - INSTALLATION	7-36
WATER PUMP INLET TUBE - 2.4L - REMOVAL	7-36
WATER PUMP INLET TUBE - 3.3/3.8L - INSTALLATION	7-37
WATER PUMP INLET TUBE - 3.3/3.8L - REMOVAL	7-37
WATERSHIELD - INSTALLATION	23-21
WATERSHIELD - REMOVAL	23-21
WEAR - STANDARD PROCEDURE, MEASURING TIMING CHAIN	9-155
WEAR INDICATORS - DIAGNOSIS AND TESTING, TREAD	22-16
WEAR PATTERNS - DIAGNOSIS AND TESTING, TIRE	22-16
WEATHERSTRIP - INSTALLATION, FRONT DOOR	23-168
WEATHERSTRIP - INSTALLATION, FRONT DOOR GLASS RUN	23-166
WEATHERSTRIP - INSTALLATION, SLIDING DOOR	23-168
WEATHERSTRIP - REMOVAL, FRONT DOOR	23-168
WEATHERSTRIP - REMOVAL, FRONT DOOR GLASS RUN	23-166
WEATHERSTRIP - REMOVAL, SLIDING DOOR	23-168
WEIGHT BLADDER & PRESSURE SENSOR - DESCRIPTION, SEAT	8O-43
WEIGHT BLADDER & PRESSURE SENSOR - OPERATION, SEAT	8O-44
WELD LOCATIONS - FOLD-IN-FLOOR - SPECIFICATIONS	23-350
WELD LOCATIONS - SPECIFICATIONS	23-234
WHEEL - DESCRIPTION	22-18
WHEEL - INSPECTION, TONE	5-94
WHEEL - INSTALLATION, STEERING	19-24
WHEEL - REMOVAL, STEERING	19-23
WHEEL ALIGNMENT - DESCRIPTION	2-47
WHEEL ALIGNMENT - STANDARD PROCEDURE	2-52
WHEEL ALIGNMENT, SPECIFICATIONS	2-56
WHEEL AND WHEEL TRIM CARE, CLEANING	22-19
WHEEL ASSEMBLY (ALUMINUM WHEEL) - INSTALLATION, TIRE	22-8
WHEEL ASSEMBLY (ALUMINUM WHEEL) - REMOVAL, TIRE	22-8
WHEEL ASSEMBLY (STEEL WHEEL) - INSTALLATION, TIRE	22-8
WHEEL ASSEMBLY (STEEL WHEEL) - REMOVAL, TIRE	22-8
WHEEL BALANCE - STANDARD PROCEDURE, TIRE	22-5
WHEEL COVER - DESCRIPTION	22-19
WHEEL COVER - INSTALLATION	22-20
WHEEL COVER - REMOVAL	22-19
WHEEL CYLINDERS - INSPECTION	5-62
WHEEL CYLINDERS - INSTALLATION	5-62
WHEEL CYLINDERS - REMOVAL	5-62
WHEEL INSPECTION - DIAGNOSIS AND TESTING	22-19
WHEEL MATCH MOUNTING - STANDARD PROCEDURE, TIRE	22-7
WHEEL MOUNTING STUDS - FRONT - INSTALLATION	22-21
WHEEL MOUNTING STUDS - FRONT - REMOVAL	22-21
WHEEL MOUNTING STUDS - REAR - INSTALLATION	22-22
WHEEL MOUNTING STUDS - REAR - REMOVAL	22-22
WHEEL ROTATION - STANDARD PROCEDURE, TIRE	22-7
WHEEL RUNOUT, SPECIFICATIONS - TONE	5-91
WHEEL, SPECIFICATIONS	22-19
WHEEL SPEED SENSOR - AWD - INSTALLATION, REAR	5-92
WHEEL SPEED SENSOR - AWD - REMOVAL, REAR	5-92
WHEEL SPEED SENSOR - FWD - INSTALLATION, REAR	5-93
WHEEL SPEED SENSOR - FWD - REMOVAL, REAR	5-93
WHEEL SPEED SENSOR - INSTALLATION, FRONT	5-92
WHEEL SPEED SENSOR - REMOVAL, FRONT	5-91
WHEEL SPEED SENSOR AIR GAP, SPECIFICATIONS	5-91
WHEEL TRIM CARE, CLEANING - WHEEL	22-19
WHEEL VIBRATION - DIAGNOSIS AND TESTING, TIRE	22-1
WHEELHOUSE SPLASH SHIELD - INSTALLATION, FRONT	23-57
WHEELHOUSE SPLASH SHIELD - REMOVAL, FRONT	23-57
WIND DEFLECTOR - INSTALLATION	23-174
WIND DEFLECTOR - REMOVAL	23-174
WIND NOISE, DIAGNOSIS AND TESTING	23-2
WINDOW - INSTALLATION, QUARTER	23-164
WINDOW - REMOVAL, QUARTER	23-164
WINDOW CRANK - INSTALLATION	23-21
WINDOW CRANK - REMOVAL	23-21
WINDOW DEFOGGER RELAY - DESCRIPTION, REAR	8G-3
WINDOW DEFOGGER RELAY - INSTALLATION, REAR	8G-4
WINDOW DEFOGGER RELAY - OPERATION, REAR	8G-3
WINDOW DEFOGGER RELAY - REMOVAL, REAR	8G-4
WINDOW DEFOGGER SWITCH - DESCRIPTION, REAR	8G-4
WINDOW DEFOGGER SWITCH - OPERATION, REAR	8G-4
WINDOW MOTOR - REMOVAL	8N-62
WINDOW MOTOR, DIAGNOSIS AND TESTING - VENT	8N-62
WINDOW REGULATOR - MANUAL - INSTALLATION	23-23
WINDOW REGULATOR - MANUAL - REMOVAL	23-22
WINDOW REGULATOR - POWER - INSTALLATION	23-22
WINDOW REGULATOR - POWER - REMOVAL	23-22
WINDOW SWITCH, DIAGNOSIS AND TESTING	8N-63
WINDOWS - DESCRIPTION, POWER	8N-61
WINDOWS - OPERATION, POWER	8N-61
WINDOWS, DIAGNOSIS AND TESTING - POWER	8N-61
WINDSHIELD - DESCRIPTION	23-161
WINDSHIELD SAFETY PRECAUTIONS, WARNING	23-161
WIPER ARM - INSTALLATION, REAR	8R-10
WIPER ARM - REMOVAL, REAR	8R-10
WIPER ARM ALIGNMENT - STANDARD PROCEDURE, FRONT	8R-9
WIPER ARMS - INSTALLATION, FRONT	8R-9
WIPER ARMS - REMOVAL, FRONT	8R-9
WIPER BLADES - CLEANING	8R-13
WIPER BLADES - INSTALLATION	8R-13
WIPER BLADES - REMOVAL	8R-13
WIPER LINKAGE - INSTALLATION	8R-14
WIPER LINKAGE - REMOVAL	8R-13
WIPER MODULE - INSTALLATION	8R-14
WIPER MODULE - REMOVAL	8R-14
WIPER MOTOR - INSTALLATION, FRONT	8R-10
WIPER MOTOR - INSTALLATION, REAR	8R-10
WIPER MOTOR - REMOVAL, FRONT	8R-9
WIPER MOTOR - REMOVAL, REAR	8R-10
WIPER SYSTEM - DIAGNOSIS AND TESTING, FRONT	8R-2
WIPER SYSTEM - DIAGNOSIS AND TESTING, REAR	8R-4
WIPERS/WASHERS - DESCRIPTION	8R-1
WIPERS/WASHERS - OPERATION	8R-2
WIPER/WASHER SWITCH - DESCRIPTION, REAR	8R-10
WIPER/WASHER SWITCH - DIAGNOSIS AND TESTING, FRONT	8R-2
WIPER/WASHER SWITCH - OPERATION, REAR	8R-11
WIRE SPLICING - STANDARD PROCEDURE	8W-01-15
WIRING - INSTALLATION, HEATER	24-122
WIRING - REMOVAL, HEATER	24-122
WIRING DIAGRAMS - DESCRIPTION, HOW TO USE	8W-01-1
WIRING HARNESS - DESCRIPTION	8N-59
WIRING HARNESS - DIAGNOSIS AND TESTING	8W-01-7
WIRING HARNESS - INSTALLATION	8N-59
WIRING HARNESS - OPERATION	8N-59
WIRING HARNESS - REMOVAL	8N-59
WIRING/TERMINAL, SPECIAL TOOLS	8W-01-10
WORN THREADS - STANDARD PROCEDURE, REPAIR OF DAMAGED OR	9-10,9-88
ZONE, DESCRIPTION - MANUAL DUAL	24-2
ZONE, DESCRIPTION - MANUAL SINGLE	24-2
ZONE, DESCRIPTION - MANUAL THREE	24-2
ZONE, OPERATION - MANUAL DUAL	24-5
ZONE, OPERATION - MANUAL SINGLE	24-4
ZONE, OPERATION - MANUAL THREE	24-5

SERVICE MANUAL COMMENTS

What errors(s) have you found?

_____

_____

_____

_____

In order for us to assist you, please include as much details as possible when reporting an error

Comments / Suggestions

_____

_____

_____

_____

☐ **Dealership Technician**
Dealer Code: _____

Retail Customer ☐

Manual Title, Year, Number and Page: _____

_____

Your Name: _____

Address: _____

_____

_____

All comments become property of DaimlerChrysler Corporation and may be used without compensation.

Fold Here

Place
Stamp
Here

DaimlerChrysler Corporation
Attn. Publications Dept.
CIMS 486-02-70
800 Chrysler Drive
Auburn Hills, MI 48326-2757

Fold Here