TABLE OF CONTENTS

1.0 INTRODUCTION 1

1.1 SYSTEM COVERAGE 1
1.2 SIX-STEP TROUBLESHOOTING PROCEDURE 1

2.0 IDENTIFICATION OF SYSTEM 1

3.0 SYSTEM DESCRIPTION AND FUNCTIONAL OPERATION 1

3.1 GENERAL DESCRIPTION 1
3.2 FUNCTIONAL OPERATION 2
3.2.1 FUEL CONTROL 2
3.2.2 ON-BOARD DIAGNOSTICS 2
3.2.3 OTHER CONTROLS 5
3.2.4 PCM OPERATING MODES 9
3.2.5 NON-MONITORED CIRCUITS 9
3.2.6 SENTRY KEY REMOTE ENTRY SYSTEM (SKREES) OVERVIEW . . . 9
3.2.7 SKREEM ON-BOARD DIAGNOSTICS 9
3.2.8 SKREES OPERATION 10
3.2.9 PROGRAMMING THE POWERTRAIN CONTROL MODULE 10
3.2.10 PROGRAMMING THE SKREEM 11
3.2.11 PROGRAMMING THE IGNITION KEYS TO THE SKREEM 11
3.3 DIAGNOSTIC TROUBLE CODES 11
3.3.1 HARD CODE 11
3.3.2 INTERMITTENT CODE 12
3.3.3 STARTS SINCE SET COUNTER 12
3.3.4 DISTANCE SINCE MI SET 12
3.4 USING THE DRBIII® 12
3.5 DRBIII® ERROR MESSAGES AND BLANK SCREEN 12
3.5.1 DRBIII® DOES NOT POWER UP 12
3.5.2 DISPLAY IS NOT VISIBLE 13

4.0 DISCLAIMERS, SAFETY, WARNINGS 13

4.1 DISCLAIMERS 13
4.2 SAFETY 13
4.2.1 TECHNICIAN SAFETY INFORMATION 13
4.2.2 VEHICLE PREPARATION FOR TESTING 13
4.2.3 SERVICING SUB ASSEMBLIES 13
4.2.4 DRBIII® SAFETY INFORMATION 13
4.3 WARNINGS AND CAUTIONS 14
4.3.1 ROAD TEST WARNINGS 14
4.3.2 VEHICLE DAMAGE CAUTIONS 14

5.0 REQUIRED TOOLS AND EQUIPMENT 14

6.0 GLOSSARY OF TERMS 14

TABLE OF CONTENTS - Continued

7.0 DIAGNOSTIC INFORMATION AND PROCEDURES 17

COMMUNICATION

*NO RESPONSE FROM PCM (PCI BUS) - NGC 18
*NO RESPONSE FROM PCM (PCM SCI ONLY) - NGC 19
*NO RESPONSE FROM SENTRY KEY REMOTE ENTRY MODULE 22
*NO RESPONSE FROM TRANSMISSION CONTROL MODULE - NGC 24
*PCI BUS COMMUNICATION FAILURE 27

DRIVEABILITY - NGC

INTERMITTENT CONDITION 30
P0016-CRANKSHAFT/CAMSHAFT TIMING MISALIGNMENT 31
P0031-O2 SENSOR 1/1 HEATER CIRCUIT LOW 35
P0037-O2 SENSOR 1/2 HEATER CIRCUIT LOW 35
P0032-O2 SENSOR 1/1 HEATER CIRCUIT HIGH 37
P0038-O2 SENSOR 1/2 HEATER CIRCUIT HIGH 37
P0068-MANIFOLD PRESSURE/THROTTLE POSITION CORRELATION 40
P0071-AMBIENT TEMP SENSOR PERFORMANCE 46
P0072-AMBIENT TEMP SENSOR LOW 49
P0073-AMBIENT TEMP SENSOR HIGH 51
P0107-MAP SENSOR LOW 53
P0108-MAP SENSOR HIGH 56
P0111-INTAKE AIR TEMPERATURE SENSOR PERFORMANCE 59
P0112-INTAKE AIR TEMPERATURE SENSOR LOW 62
P0113-INTAKE AIR TEMPERATURE SENSOR HIGH 64
P0116-ENGINE COOLANT TEMPERATURE PERFORMANCE 66
P0117-ENGINE COOLANT TEMPERATURE SENSOR LOW 69
P0118-ENGINE COOLANT TEMPERATURE SENSOR HIGH 71
P0122-THROTTLE POSITION SENSOR #1 LOW 73
P0123-THROTTLE POSITION SENSOR #1 HIGH 76
P0125-INSUFFICIENT COOLANT TEMP FOR CLOSED-LOOP FUEL CONTROL . . .79
P0128-THERMOSTAT RATIONALITY 81
P0129-BAROMETRIC PRESSURE OUT-OF-RANGE LOW 86
P0131-O2 SENSOR 1/1 VOLTAGE LOW 89
P0137-O2 SENSOR 1/2 VOLTAGE LOW 89
P0132-O2 SENSOR 1/1 VOLTAGE HIGH 92
P0138-O2 SENSOR 1/2 VOLTAGE HIGH 92
P0133-O2 SENSOR 1/1 SLOW RESPONSE 95
P0139-O2 SENSOR 1/2 SLOW RESPONSE 95
P0135-O2 SENSOR 1/1 HEATER PERFORMANCE 97
P0141-O2 SENSOR 1/2 HEATER PERFROMANCE 97
P0171-FUEL SYSTEM 1/1 LEAN 100
P0172-FUEL SYSTEM 1/1 RICH 105
P0201-FUEL INJECTOR #1 109
P0202-FUEL INJECTOR #2 109
P0203-FUEL INJECTOR #3 109
P0204-FUEL INJECTOR #4 109
P0205-FUEL INJECTOR #5 109
P0206-FUEL INJECTOR #6 109
P0300-MULTIPLE CYLINDER MISFIRE 112
P0301-CYLINDER #1 MISFIRE 112
P0302-CYLINDER #2 MISFIRE 112
P0303-CYLINDER #3 MISFIRE 112
P0304-CYLINDER #4 MISFIRE 112

TABLE OF CONTENTS - Continued

P0305-CYLINDER #5 MISFIRE 112
P0306-CYLINDER #6 MISFIRE 112
P0315-NO CRANK SENSOR LEARNED 120
P0325-KNOCK SENSOR #1 CIRCUIT 122
P0335-CRANKSHAFT POSITION SENSOR CIRCUIT 125
P0339-CRANKSHAFT POSITION SENSOR INTERMITTENT 130
P0340-CAMSHAFT POSITION SENSOR CIRCUIT 134
P0344-CAMSHAFT POSITION SENSOR INTERMITTENT 139
P0401 - EGR SYSTEM PERFORMANCE 143
P0403 - EGR CONTROL CIRCUIT 146
P0404 - EGR POSITION SENSOR PERFORMANCE 149
P0405 - EGR POSITION SENSOR LOW 153
P0406 - EGR POSITION SENSOR HIGH 156
P0420-CATALYTIC 1/1 EFFICIENCY 159
P0432-CATALYTIC 2/1 EFFICIENCY 159
P0440-GENERAL EVAP SYSTEM FAILURE 161
P0441-EVAP PURGE SYSTEM PERFORMANCE 166
P0442-EVAP SYSTEM MEDIUM LEAK 168
P0455-EVAP SYSTEM LARGE LEAK 168
P0443-EVAP PURGE SOLENOID CIRCUIT 173
P0452-NVLD PRESSURE SWITCH SENSE CIRCUIT LOW 176
P0453-NVLD PRESSURE SWITCH SENSE CIRCUIT HIGH 179
P0456-EVAP SYSTEM SMALL LEAK 181
P0461-FUEL LEVEL SENSOR #1 PERFORMANCE 183
P0462-FUEL LEVEL SENSOR #1 LOW 185
P0463-FUEL LEVEL SENSOR #1 HIGH 185
P0480-LOW SPEED FAN CONTROL RELAY CIRCUIT 186
P0498-NVLD CANISTER VENT VALVE SOLENOID CIRCUIT LOW 190
P0499-NVLD CANISTER VENT VALVE SOLENOID CIRCUIT HIGH 191
P0501-VEHICLE SPEED SENSOR #1 PERFORMANCE (AUTO TRANS) 193
P0501-VEHICLE SPEED SENSOR #1 PERFORMANCE (MANUAL TRANS) 194
P0506-IDLE SPEED LOW PERFORMANCE 196
P0507-IDLE SPEED HIGH PERFORMANCE 196
P0519-IDLE SPEED PERFORMANCE 196
P0508-IAC VALVE SENSE CIRCUIT LOW 198
P0509-IAC VALVE SENSE CIRCUIT HIGH 201
P0513-INVALID SKIM KEY 203
P0516-BATTERY TEMPERATURE SENSOR LOW 205
P0517-BATTERY TEMPERATURE SENSOR HIGH 207
P0522 PRESSURE SENSOR LOW 209
P0532-A/C PRESSURE SENSOR LOW 210
P0533-A/C PRESSURE SENSOR HIGH 213
P0562-BATTERY VOLTAGE LOW 216
P0563-BATTERY VOLTAGE HIGH 219
P0572-BRAKE SWITCH #1 CIRCUIT LOW 221
P0573-BRAKE SWITCH #1 CIRCUIT HIGH 223
P0580-SPEED CONTROL SWITCH #1 LOW 225
P0581-SPEED CONTROL SWITCH #1 HIGH 227
P0582-SPEED CONTROL VACUUM SOLENOID CIRCUIT 229
P0586-SPEED CONTROL VENT SOLENOID CIRCUIT 231
P0594-SPEED CONTROL SERVO POWER CIRCUIT 233
P0600-SERIAL COMMUNICATION LINK 236
P0601-INTERNAL MEMORY CHECKSUM INVALID 236

P0622-GENERATOR FIELD CONTROL CIRCUIT 237
P0627-FUEL PUMP RELAY CIRCUIT 239
P0630-VIN NOT PROGRAMMED IN PCM 242
P0632-ODOMETER NOT PROGRAMMED IN PCM. 243
P0633-SKIM KEY NOT PROGRAMMED IN PCM. 244
P0645-A/C CLUTCH RELAY CIRCUIT 245
P0685-ASD RELAY CONTROL CIRCUIT 248
P0688-ASD RELAY SENSE CIRCUIT LOW 251
P0700-TRANSMISSION CONTROL SYSTEM/READ TRANSMISSION DTCS ON THE DRBIII®. 254
P0833-CLUTCH RELEASED SWITCH CIRCUIT 255
P0850-PARK/NEUTRAL SWITCH PERFORMANCE 257
P1115-GENERAL TEMP SENSOR PERFORMANCE. 258
P1593-SPEED CONTROL SWITCH STUCK. 262
P1602-PCM NOT PROGRAMMED 265
P1603-PCM INTERNAL DUAL-PORT RAM COMMUNICATION 266
P1604-PCM INTERNAL DUAL-PORT RAM READ/WRITE INTEGRITY FAILURE. . .266
P1607-PCM INTERNAL SHUTDOWN TIMER RATIONALITY 266
P1696-EEPROM MEMORY WRITE DENIED/INVALID. 267
P1697-EMR (SRI) MILEAGE NOT STORED. 267
P2074-MANIFOLD PRESSURE/THROTTLE POSITION CORRELATION - HIGH FLOW/VACUUM LEAK 269
P2096-DOWN STREAM FUEL SYSTEM 1/2 LEAN 275
P2097-DOWN STREAM FUEL SYSTEM 1/2 RICH 275
P2302-IGNITION COIL #1 SECONDARY CIRCUIT-INSUFFICIENT IONIZATION . . .278
P2305-IGNITION COIL #2 SECONDARY CIRCUIT-INSUFFICIENT IONIZATION . . .278
P2308-IGNITION COIL #3 SECONDARY CIRCUIT-INSUFFICIENT IONIZATION . . .278
P2503-CHARGING SYSTEM VOLTAGE LOW 281
U0101-NO TRANSMISSION BUS MESSAGE. 284
U0140-NO BODY BUS MESSAGES 286
U0155-NO CLUSTER BUS MESSAGE 288
U0168-NO SKIM BUS MESSAGES. 289
U110C-NO FUEL LEVEL BUS MESSAGE 291
*CHECKING PCM POWER AND GROUND CIRCUITS 293
*CHECKING THE A/C RELAY OUTPUT 294

SKREEM

ANTENNA FAILURE 296
COP FAILURE. 296
EEPROM FAILURE. 296
RAM FAILURE. 296
ROM FAILURE 296
SERIAL LINK INTERNAL FAULT 296
STACK OVERFLOW FAILURE. 296
BCM MESSAGE MISSING. 298
PCM STATUS FAILURE 299
SERIAL LINK EXTERNAL FAULT 299
ROLLING CODE FAILURE. 301
VIN MISMATCH. 301
TRANSPONDER COMMUNICATION FAILURE 303
TRANSPONDER ID MISMATCH 303
TRANSPONDER RESPONSE MISMATCH. 303
UNPROGRAMMED KEY 306

STARTING
*CHECKING FUEL DELIVERY 307
*CHECKING FUEL PRESSURE LEAK DOWN 310
*CHECKING HARD START (FUEL DELIVERY SYSTEM) 311
*ENGINE CRANKS DOES NOT START 313
*NO CRANK CONDITION. 318
*NO RESPONSE FROM PCM WITH A NO START CONDITION 321
*START AND STALL CONDITION 322

VERIFICATION TESTS
VERIFICATION TESTS 325

8.0 COMPONENT LOCATIONS 331

8.1 CONTROL MODULES AND FUSE & RELAY CENTER 331
8.2 CONTROLS AND SOLENOID 331
8.3 DATA LINK CONNECTOR 333
8.4 SENSORS 334
8.5 FUEL SYSTEM 336
8.6 SWITCHES 337

9.0 CONNECTOR PINOUTS 339

A/C COMPRESSOR CLUTCH - LT. GRAY 2 WAY 339
A/C PRESSURE SENSOR - GRAY 4 WAY 339
AMBIENT TEMPERATURE SENSOR - BLACK 2 WAY 339
BATTERY TEMPERATURE SENSOR - BLACK 2 WAY 339
BRAKE LAMP SWITCH - BLACK 6 WAY 340
CAMSHAFT POSITION SENSOR (GAS) - BLACK 3 WAY 340
CRANKSHAFT POSITION SENSOR (GAS) - BLACK 3 WAY 340
DATA LINK CONNECTOR - BLACK 16 WAY 340
EGR SOLENOID (3.3L) - BLACK 6 WAY 341
ENGINE COOLANT TEMP SENSOR (GAS) - BLACK 2 WAY 341
EVAP/PURGE SOLENOID (GAS) - BLACK 2 WAY 341
FUEL INJECTOR NO. 1 (2.4L/3.3L/3.8L) - BLACK 2 WAY 341
FUEL INJECTOR NO. 2 (2.4L/3.3L/3.8L) - BLACK 2 WAY 342
FUEL INJECTOR NO. 3 (2.4L/3.3L/3.8L) - BLACK 2 WAY 342
FUEL INJECTOR NO. 4 (2.4L/3.3L/3.8L) - BLACK 2 WAY 342
FUEL INJECTOR NO. 5 (3.3L/3.8L) - BLACK 2 WAY. 342
FUEL INJECTOR NO. 6 (3.3L/3.8L) - BLACK 2 WAY. 343
FUEL PUMP MODULE - LT. GRAY 4 WAY 343
GENERATOR - BLACK 2 WAY 343
IDLE AIR CONTROL MOTOR (GAS) - BLACK 2 WAY. 343
IGNITION COIL (2.4L) - BLACK 3 WAY. 344
IGNITION COIL (3.3L/3.8L) - DK. GRAY 4 WAY 344
INLET AIR TEMPERATURE SENSOR - BLACK 2 WAY. 344
A/C COMPRESSOR CLUTCH RELAY. 346
AUTO SHUT DOWN RELAY (GAS) 346
FUEL PUMP RELAY (GAS) 346
STARTER MOTOR RELAY. 346
INTEGRATED POWER MODULE C2 - GREEN/BLUE 10 WAY 347
INTEGRATED POWER MODULE C3 - 20 WAY 347
INTEGRATED POWER MODULE C4 - BLUE 10 WAY 348

INTEGRATED POWER MODULE C7 - 20 WAY 348
INTEGRATED POWER MODULE C8 - ORANGE 10 WAY 349
INTEGRATED POWER MODULE C9 - BLACK 10 WAY 349
KNOCK SENSOR (EXCEPT EXPORT) - BLACK 2 WAY 349
LEFT SPEED CONTROL SWITCH - WHITE 2 WAY 349
MANIFOLD ABSOLUTE PRESSURE SENSOR (GAS) - BLACK 3 WAY 350
OXYGEN SENSOR 1/1 UPSTREAM (GAS) - 4 WAY 350
OXYGEN SENSOR 1/2 DOWNSTREAM (GAS) - 4 WAY 350
POWERTRAIN CONTROL MODULE C1 - BLACK 38 WAY 351
POWERTRAIN CONTROL MODULE C2 - ORANGE 38 WAY 352
POWERTRAIN CONTROL MODULE C3 - NATURAL 38 WAY 353
POWERTRAIN CONTROL MODULE C4 - GREEN 38 WAY 354
RADIATOR FAN NO. 1 (GAS) - BLACK 2 WAY 354
RADIATOR FAN NO. 2 (GAS) - BLACK 2 WAY 355
RADIATOR FAN RELAY (GAS) - 4 WAY 355
RIGHT SPEED CONTROL SWITCH - WHITE 2 WAY 355
SENTRY KEY REMOTE ENTRY MODULE (SKREEM) - BLACK 6 WAY 355
SPEED CONTROL SERVO (GAS) - BLACK 4 WAY 356
THROTTLE POSITION SENSOR (GAS) - GRAY 3 WAY 356
VEHICLE SPEED SENSOR (MTX) - BLACK 3 WAY 356

10.0 SCHEMATIC DIAGRAMS. 357

11.0 CHARTS AND GRAPHS 359

are intended to assist the field technician in repairing vehicle problems by the quickest means.

3.2 FUNCTIONAL OPERATION

3.2.1 FUEL CONTROL

The PCM controls the air/fuel ratio of the engine by varying fuel injector on time. Mass air flow is calculated using the speed density method using enigne speed, manifold absolute pressure, and air temperature change.

Different fuel calculation strategies are used depending on the operational state of the engine. During crank mode, a longer pulse width fuel pulse is delivered followed by fuel pulses determined by a crank time strategy. Cold engine operation is determined via an open loop strategy until the O2 sensors have reached operating temperature. At this point, the strategy enters a closed loop mode where fuel requirements are based upon the state of the O2 sensors, engine speed, MAP, throttle position, air temperature, battery voltage, and coolant temperature.

3.2.2 ON-BOARD DIAGNOSTICS

The PCM has been programmed to monitor many different circuits of the fuel injection system. This monitoring is called on-board diagnosis.

Certain criteria, or arming conditions, must be met for a trouble code to be entered into the PCM memory. The criteria may be a range of: engine rpm, engine temperature, and/or input voltage to the PCM. If a problem is sensed with a monitored circuit, and all of the criteria or arming conditions are met, then a trouble code will be stored in the PCM.

It is possible that a trouble code for a monitored circuit may not be entered into the PCM memory even though a malfunction has occurred. This may happen because one of the trouble code criteria have not been met.

The PCM compares input signal voltages from each input device with specifications (the established high and low limits of the range) that are programmed into it for that device. If the input voltage is not within specifications and other trouble code criteria are met, a trouble code will be stored in the PCM memory.

The On Board Diagnostics have evolved to the second Generation of Diagnostics referred to as OBDII/Euro Stage III OBD. These OBDII/Euro Stage III OBD Diagnostics control the functions necessary to meet the requirements of California OBDII, Federal OBD regulation and European regulation. These requirements specify the inclusion of a Malfunction Indicator Light (MIL) located on the instrument panel. The purpose of the MIL is to inform the vehicle operator in the event of a malfunction of any emission system or component.

MIL Lamp Strategy

I/M Readiness OK to test = **Key On Engine OFF** – MIL Lamp will remain on until the vehicle is started or Ignition is turned off.

I/M not ready for testing **= Key On Engine OFF** – MIL Lamp on solid for (15) seconds then MIL Lamp will flash on/off for (5) seconds then it will remain on until the vehicle is started or the Ignition is turned off.

In order to meet mandated regulations, a new feature has been added to engine control modules for 2002 to provide an OBDII I/M (In-Field Inspection & Maintenance) readiness indicator. When the engine controller is in in-field mode, turning the key on with the engine off will activate the MIL light for approximately 15 seconds. After this time, if the vehicle is ready for I/M testing the MIL light will remain fully illuminated. If the vehicle is not ready, the MIL light will blink for approximately 5 seconds and then remain on until the first engine crank or the key is turned off. This differs from the previous behavior of the MIL light, which was only activated with a failure in the system. For in-plant mode, the MIL light will function as in previous model years. Below are diagrams of how the MIL light will operate.

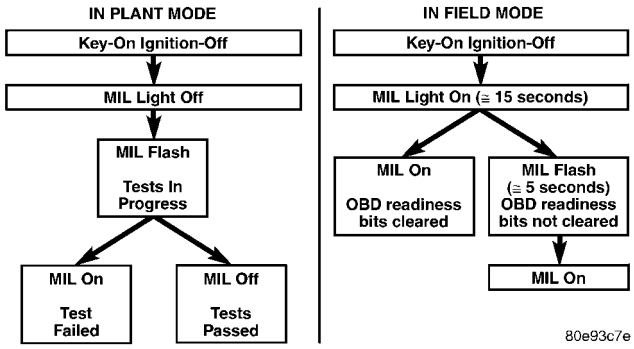

OBD II/EURO STAGE III OBD MONITOR INFORMATION

Comprehensive Components Monitor	Major Monitors Non Fuel Control & Non Misfire	Major Monitors Fuel Control & Misfire
Run constantly	Run Once Per Trip	Run Constantly
Includes All Engine Hardware - Sensors, Switches, Solenoids, etc.	Monitors Entire Emission System	Monitors Entire System
One Trip Faults - Turns On The MIL and Sets DTC After One Failure	Two Trip Faults - Turns On The MIL and Sets DTC After Two Consecutive Failures	Two Trip Faults - Turns On The MIL and Sets DTC After Two Consecutive Failures
Priority 3	**Priority 1 or 3**	**Priority 2 or 4**
All Checked For Continuity Open Short To Ground Short To Voltage	Done Stop Testing = Yes Oxygen Sensor Heater Oxygen Sensor Response	**Fuel Control Monitor** Monitors Fuel Control System For: Fuel System Lean Fuel System Rich Requires 3 Consecutive *Fuel System Good Trips* To Extinguish The MIL
Inputs Checked For Rationality	Catalytic Converter Efficiency Except EWMA - up to 6 tests per trip and a one trip fault	
Outputs Checked For Functionality	EGR System Evaporative Emission System	**Misfire Monitor** Monitors For Engine Misfire at: 1000 RPM Counter (Type B) **200 RPM Counter (Type A) Requires 3 Consecutive *Misfire Good Trips* To Extinguish the MIL **Type A misfire is a two trip failure. The MIL will illuminate and blink at the first failure.
Requires 3 Consecutive *Global/Alternate Good Trips* to Extinguish the MIL*	Requires 3 Consecutive *Global Good Trips* to Extinguish the MIL*	

***40 Warm Up Cycles** are required to erase DTC's *after* the MIL has been extinguished.

the monitor run conditions, select the EGR PRE-TEST in the DRB III®, OBD II Monitors Menu.

D. 02 SENSOR HEATER MONITOR

This monitor is now continuously running once the heaters are energized. Pass information will be processed at power down. For the monitor run conditions, select the O2S HEATER MON PRE-TEST in the DRB III®, OBD II Monitors Menu.

3.2.3 OTHER CONTROLS

CHARGING SYSTEM

The charging system is turned on when the engine is started. The Generator field is control by the PCM using a 12-volt high-side driver and a body ground circuit. The Generator output voltage is determined by the PCM. When more system voltage is needed, the PCM will applies a longer duty cycle using the 12-volt high-side drive and shortens duty cycle or none at all when less voltage is needed.

O2 SENSOR

The O2 system with ignition on and engine off has a normalized O2 voltage of around 5 volts as displayed on the DRBIII or measured with a high impedance voltmeter. As the O2 sensor starts generating a signal the voltage will move towards 2.5 volts. The voltage will typically vary between 2.5 volts and 3.5 volts on a normal running engine. The goal voltage is also typically between 2.5 and 3.5 volts. This implies that the 0-volt through 1-volt range that you are used to is still valid, only it is shifted up by a 2.5 volt offset. This 2.5 volt supply is being delivered through the sensor return line.

SPEED CONTROL SYSTEM

The PCM controls vehicle speed by operation of the speed control servo vacuum and vent solenoids. Energizing the vacuum solenoid applies vacuum to the servo to increase throttle position. Operation of the vent solenoid slowly releases the vacuum allowing throttle position to decrease. A special vacuum dump solenoid allows immediate release of the throttle during speed control operation.

Speed control may be cancelled by braking, driver input using the speed control switches, shifting into neutral, excessive engine speed (wheels spinning), or turning the ignition off.

NOTE: If two speed control switches are selected simultaneously, the PCM will detect an illegal switch operation and turn the speed control off.

NATURAL VACUUM LEAK DETECTION (NVLD)

The Natural Vacuum Leak Detection (NVLD) system is the next generation evaporative leak detection system that will first be used on vehicles equipped with the Powertrain Control Module (PCM) or Next Generation Controller (NGC) starting in 2002 M.Y. This new system replaces the leak detection pump as the method of evaporative system leak detection. The current CARB requirement is to detect a leak equivalent to a 0.020″ (0.5 mm) hole. This system has the capability to detect holes of this size very dependably.

The basic leak detection theory employed with NVLD is the ″Gas Law″. This is to say that the pressure in a sealed vessel will change if the temperature of the gas in the vessel changes. The vessel will only see this effect if it is indeed sealed. Even small leaks will allow the pressure in the vessel to come to equilibrium with the ambient pressure.

In addition to the detection of very small leaks, this system has the capability of detecting medium as well as large evaporative system leaks.

THE NVLD UTILIZES THE GAS LAW PRINCIPLES

A vent valve seals the canister vent during engine off conditions. If the vapor system has a leak of less than the failure threshold, the evaporative system will be pulled into a vacuum, either due to the cool down from operating temperature or diurnal ambient temperature cycling. The diurnal effect is considered one of the primary contributors to the leak determination by this diagnostic. When the vacuum in the system exceeds about 1″ H2O (0.25 KPA), a vacuum switch closes. The switch closure sends a signal to the PCM. The PCM, via appropriate logic strategies (described below), utilizes the switch signal, or lack thereof, to make a determination of whether a leak is present.

THE NVLD DEVICE AND HOW IT FUNCTIONS

The NVLD Assembly is designed with a normally open vacuum switch, a normally closed solenoid, and a seal, which is actuated by both the solenoid and a diaphragm. The NVLD is located on the atmospheric vent side of the canister.

The normally open vacuum switch will close with about 1″ H2O (0.25 KPA) vacuum in the evaporative system. The diaphragm actuates the switch. This is above the opening point of the fuel inlet check valve in the fill tube so cap off leaks can be detected. Submerged fill systems must have recirculation lines that do not have the in-line normally closed check valve that protects the system from failed nozzle liquid ingestion, in order to detect cap off conditions.

The normally closed valve in the NVLD is intended to maintain the seal on the evaporative system during the engine off condition. If vacuum in the evaporative system exceeds 3″ to 6″ H2O (0.75 to 1.5 KPA), the valve will be pulled off the seat, opening the seal. This will protect the system from excessive vacuum as well as allowing sufficient purge flow in the event that the solenoid was to become inoperative. The solenoid actuates the valve to unseal the canister vent while the engine is running. It also will be used to close the vent during the medium and large leak tests and during the purge flow check. This solenoid requires initial 1.5 amps of current to pull the valve open but after 100 ms. will be duty cycled down to an average of about 150 mA for the remainder of the drive cycle.

Another feature in the NVLD Assembly is a diaphragm that will open the seal with pressure in the evaporative system. The seal will be opened at about 0.5″ H2O (0.12 KPA) pressure to permit the venting of vapors during refueling. An added benefit to this is that it will also allow the tank to ″breathe″ during increasing temperatures, thus limiting the pressure in the tank to this low level. This is beneficial because the induced vacuum during a subsequent declining temperature will achieve the switch closed (pass threshold) sooner than if the tank had to decay from a built up pressure.

The NVLD Assembly itself has 3 wires: Switch sense, solenoid driver and ground. It also includes a resistor to protect the switch from a short to battery or a short to ground. The PCM utilizes a high-side driver to energize and duty-cycle the solenoid.

THE PCM'S ROLE IN NVLD DIAGNOSIS:

The integral part of the diagnostic system that makes engine-off leak detection possible is a special circuit in the PCM controller. After the vehicle is turned off, a special part of the controller stays alive and monitors for an NVLD switch closure. This circuit within the PCM is very specific in its function and consumes very little power. If a switch closure is detected, it will log the event and time from key-off, and then power down. This information will be processed at the next key cycle.

NVLD LEAK DETECTION

Small Leak Test (Passive)

If, after a specified delay after key off (perhaps 5 minutes), the switch closes or is closed, the test will be pass, indicating that there is no leak. The PCM records the switch closure. The NVLD circuit in the PCM will shut down for the remainder of that particular engine off (soak) period. When the engine is started, the switch closure is recorded as a ″Pass,″ and the timers that are recording accumulated time are reset.

This diagnostic test can take at least a week to mature a leak fault. A week has been chosen for this because the vehicle will have been exposed to the largest possible drive scenarios before a decision is made (most vehicles should see both daily work and weekend driving cycles). This also satisfies CARB's stated goal of getting 3 MIL illuminations within a month for 0.020″ (0.5 mm) leak detection diagnostic.

The diagnostics will log engine run time and engine off time to determine when a week has elapsed. There is a limit on the total amount of run time that is applied to the one-week timer. There is also a limit on the total soak time that will be allowed to be applied to the one-week timer. There will be a limit on the amount of accrued run time during one specific drive that can be applied to the one-week timer.

The enabling criteria to run this monitor are:

- Fuel level less than 85%
- Ambient temperature greater than 40 °F (4.4 °C)

Rationality Tests

1. The rationality check of the switch, solenoid and seal will be performed as follows:

- At key-on, the NVLD solenoid will be energized to vent any vacuum that may be trapped in the evaporative system from the previous soak. This should result in an open switch condition.
- The solenoid will be de-energized (to seal the system) at the point where purge begins. The system / NVLD component rationality passes for that drive cycle if the switch closes after purge begins.
- The solenoid is then re-energized for the remainder of the drive cycle.
- If the switch events are not seen in a certain period of time, the rationality check will have failed (2 trip rule).

2. Purge Flow:

The above rationality check is considered sufficient to confirm purge solenoid function and conformance with the purge flow test requirement. The Purge Flow Monitor is passed based on switch activity when purge is turned on or based on a rich fuel control shift when purge is turned on.

Medium and Large Leak Test (Intrusive)

NOTE: This intrusive test will only be run if the Small Leak (passive) test fails, or is inconclusive (the switch does not close)

Enabling Conditions:

- 40 °F to 90 °F
- Engine temperature at startup within 10 °F of the ambient temperature
- Fuel level less than 85%

The intrusive Medium and Large leak are conducted as follows:

- De-energize the NVLD solenoid to seal the canister vent.
- Activate purge shortly after closed loop. Pull the tank vacuum past the vacuum switch point (1″ H2O vacuum) of the NVLD for a specific time while tracking the standard purge flow rate.
- Turn purge off and determine how long it takes to decay the tank vacuum and reopen the switch. Determine the leak size from the time it took to reopen the switch. Note: Fuel level is an important determining factor.
- If the switch does not close, a more aggressive purge flow will be applied to determine if it is a very large leak, missing fuel cap, problem with the NVLD device, purge flow problem, etc...

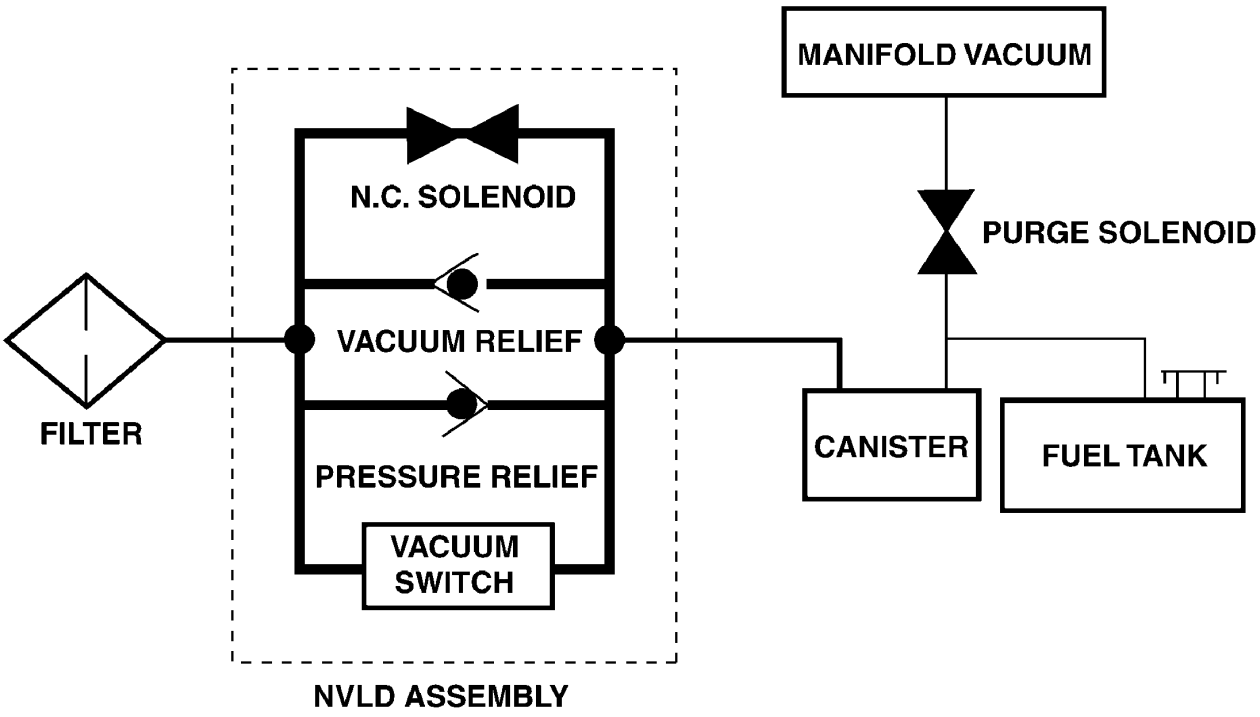

FIGURE 1

NVLD ASSEMBLY INTERNAL SCHEMATIC

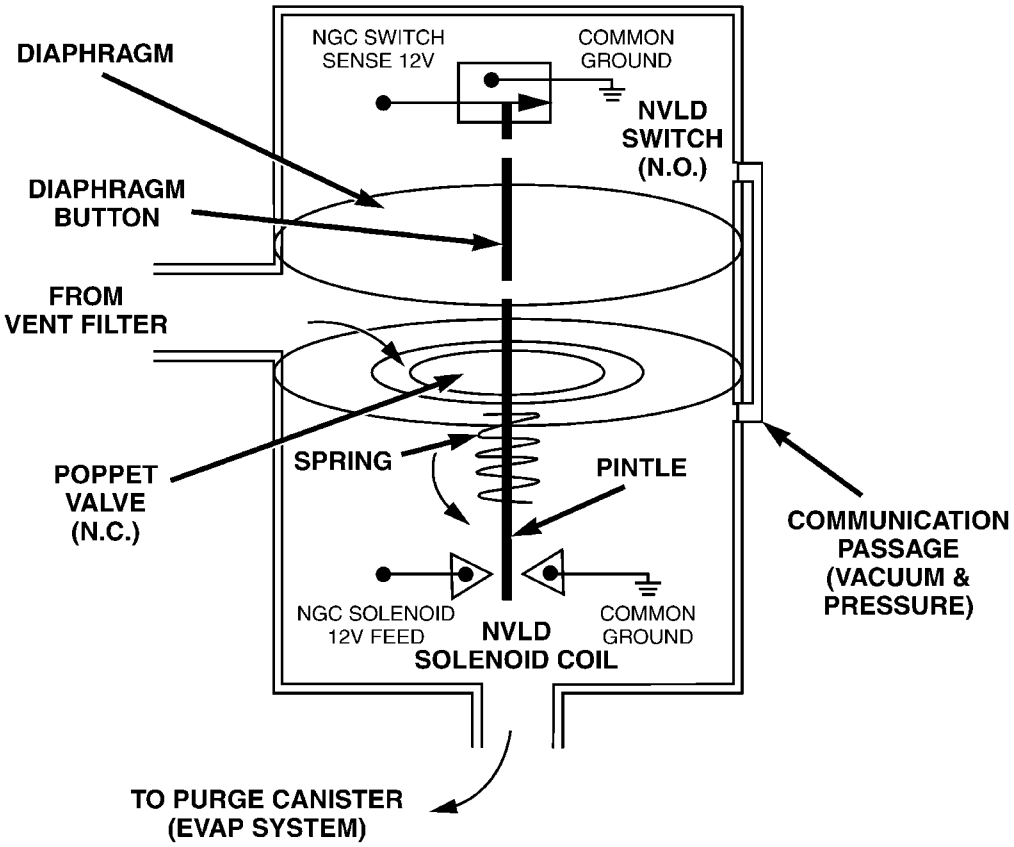

NVLD Switch Closure happens at 1" H2O (Water) Vacuum (+ - 12% when new). Vacuum draws the Diaphragm up closing the Switch.

- **PRESSURE RELIEF:** The Poppet Valve is spring loaded closed (up). It opens at 1" H2O Pressure. Pressure from the Purge Canister (EVAP System) enters the top of the diaphragm chamber via an internal communication passage. Pressure then pushes the Diaphragm down unseating the Poppet Valve allow the EVAP pressure to exit to the Vent Filter.
- **VACUUM RELIEF:** The Poppet Valve is spring loaded closed (up). The Poppet Valve begins to open at 3" - 4" H2O Vacuum, and is completely open at 6" H2O (flows 70 Liters per Minute). Vacuum acts on the bottom of the Poppet Valve & draws it down to open the Purge Canister (EVAP System) to the Vent Filter.

NVLD Solenoid has a Resistance of 8 Ohms (+ - 0.5 Ohm) at 68 Degrees F. When Energized, it pulls the Pintle down thus opening the Poppet Valve and connects the Purge Canister with the Vent Filter (Atmosphere).

80dceb68

FIGURE 2

3.2.4 PCM OPERATING MODES

As input signals to the PCM change, the PCM adjusts its response to output devices. For example, the PCM must calculate a different injector pulse width and ignition timing for idle than it does for wide open throttle. There are several different modes of operation that determine how the PCM responds to the various input signals.

There are two types of engine control operation: **open loop** and **closed loop.**

In **open loop** operation, the PCM receives input signals and responds according to preset programming. Inputs from the heated oxygen sensors are not monitored.

In **closed loop** operation, the PCM monitors the inputs from the heated oxygen sensors. This input indicates to the PCM whether or not the calculated injector pulse width results in the ideal air-fuel ratio of 14.7 parts air to 1 part fuel. By monitoring the exhaust oxygen content through the oxygen sensor, the PCM can fine tune injector pulse width. Fine tuning injector pulse width allows the PCM to achieve the lowest emission levels while maintaining optimum fuel economy.

The engine start-up (crank), engine warm-up, and wide open throttle modes are open loop modes. Under most operating conditions, closed loop modes occur with the engine at operating temperature.

3.2.5 NON-MONITORED CIRCUITS

The PCM does not monitor the following circuits, systems, and conditions even though they could have malfunctions that result in driveability problems. A diagnostic code may not be displayed for the following conditions. However, problems with these systems may cause a diagnostic code to be displayed for other systems. For example, a fuel pressure problem will not register a diagnostic code directly, but could cause a rich or lean condition. This could cause an oxygen sensor, fuel system, or misfire monitor trouble code to be stored in the PCM.

Engine Timing − The PCM cannot detect an incorrectly indexed timing chain, camshaft sprocket, or crankshaft sprocket. The PCM also cannot detect an incorrectly indexed distributor.(*)

Fuel Pressure − Fuel pressure is controlled by the fuel pressure regulator. The PCM cannot detect a clogged fuel pump inlet filter, clogged in-line filter, or a pinched fuel supply.(*)

Fuel Injectors − The PCM cannot detect if a fuel injector is clogged, the pintle is sticking, or the wrong injectors are installed.(*)

Fuel Requirements − Poor quality gasoline can cause problems such as hard starting, stalling, and stumble. Use of methanol-gasoline blends may result in starting and driveability problems. See individual symptoms and their definitions in Section 6.0 (Glossary of Terms).

PCM Grounds − The PCM cannot detect a poor system ground. However, a diagnostic trouble code may be stored in the PCM as a result of this condition.

Throttle Body Air Flow − The PCM cannot detect a clogged or restricted air cleaner inlet or filter element.(*)

Exhaust System − The PCM cannot detect a plugged, restricted, or leaking exhaust system.(*)

Cylinder Compression − The PCM cannot detect uneven, low, or high engine cylinder compression.(*)

Excessive Oil Consumption − Although the PCM monitors the exhaust stream oxygen content through the oxygen sensor when the system is in a closed loop, it cannot determine excessive oil consumption.

NOTE: Any of these conditions could result in a rich or lean condition causing an oxygen sensor TROUBLE CODE to be stored in the PCM, or the vehicle may exhibit one or more of the driveability symptoms listed in the Table of Contents.

3.2.6 SENTRY KEY REMOTE ENTRY SYSTEM (SKREES) OVERVIEW

The Sentry Key Remote Entry Module (SKREEM) combines the Sentry Immobilizer Module (SKIM) and the Remote Keyless Entry (RKE) Module into one module system that performs the functions of both modules. Refer to the Body diagnostic information manual for all RKE related diagnostic information.

The SKREEM is designed to prevent unauthorized vehicle operation. The system consists of a SKREEM, ignition key(s) equipped with a transponder chip and PCM. When the ignition switch is turned on, the SKREEM interrogates the ignition key. If the ignition key is Valid or Invalid, the SKREEM sends a PCI Bus message to the PCM indicating ignition key status. Upon receiving this message the PCM will terminate engine operation, or allow the engine to continue to operate.

3.2.7 SKREEM ON-BOARD DIAGNOSTICS

The SKREEM has been programmed to transmit and monitor many different coded messages as well as PCI Bus messages. This monitoring is called On Board Diagnosis.

Certain criteria must be met for a diagnostic trouble code to be entered into the SKREEM memory. The criteria may be a range of; Input voltage,

PCI Bus message, or coded messages to the SKREEM. If all of the criteria for monitoring a circuit or function are met and a fault is sensed, a diagnostic trouble code will be stored in the SKREEM memory.

3.2.8 SKREES OPERATION

When ignition power is supplied to the SKREEM, the SKREEM performs an internal self-test. After the self-test is completed, the SKREEM energizes the antenna (this activates the transponder chip) and sends a challenge to the transponder chip. The transponder chip responds to the challenge by generating an encrypted response message using the following:

Secret Key - This is an electronically stored value (identification number) that is unique to each SKREES. The secret key is stored in the SKREEM, PCM and all ignition key transponders.

Challenge - This is a random number that is generated by the SKREEM at each ignition key cycle.

The secret key and challenge are the two variables used in the algorithm that produces the encrypted response message. The transponder uses the crypto algorithm to receive, decode and respond to the message sent by the SKREEM. After responding to the coded message, the transponder sends a transponder I.D. message to the SKREEM. The SKREEM compares the transponder I.D. to the available valid key codes in the SKREEM memory (8 key maximum at any one time). After validating the key ignition the SKREEM sends a PCI Bus message called a Seed Request to the engine controller then waits for a PCM response. If the PCM does not respond, the SKREEM will send the seed request again. After three failed attempts the SKREEM will stop sending the seed request and store a trouble code. If the PCM sends a seed response, the SKREEM sends a valid/invalid key message to the PCM. This is an encrypted message that is generated using the following:

VIN - Vehicle Identification Number

Seed - This is a random number that is generated by the PCM at each ignition key cycle.

The VIN and seed are the two variables used in the rolling code algorithm that encrypts the valid/invalid key message. The PCM uses the rolling code algorithm to receive, decode and respond to the valid/invalid key message sent by the SKREEM. After sending the valid/invalid key message the SKREEM waits 3.5 seconds for a PCM status message from the PCM. If the PCM does not respond with a valid key message to the SKREEM, a fault is detected and a trouble code is stored.

The SKREES incorporates a VTSS LED located on the instrument panel upper cover. The LED receives switched ignition voltage and is hardwired to the body control module. The LED is actuated when the SKREEM sends a PCI Bus message to the body controller requesting the LED on. The body controller then provides the ground for the LED. The SKREEM will request VTSS LED operation for the following:

- bulb checks at ignition on
- to alert the vehicle operator to a SKIS malfunction
- customer key programming mode

For all faults except transponder faults and VTSS LED remains on steady. In the event of a transponder fault the LED flashes at a rate of 1 Hz (once per second). If a fault is present the LED will remain on or flashing for the complete ignition cycle. If a fault is stored in SKREEM memory which prevents the system from operating properly, the PCM will allow the engine to start and run (for 2 seconds) up to six times. After the sixth attempt, the PCM disables the starter relay until the fault is corrected.

3.2.9 PROGRAMMING THE POWERTRAIN CONTROL MODULE

Important Note: Before replacing the PCM for a failed driver, control circuit or ground circuit, be sure to check the related component/circuit integrity for failures not detected due to a double fault in the circuit. Most PCM driver/control circuit failures are caused by internal failure to components (i.e. 12-volt pull-ups, drivers and ground sensors). These failures are difficult to detect when a double fault has occurred and only one DTC has set.

NOTE: If the PCM and the SKREEM are replaced at the same time, program the VIN into the PCM first. All vehicle keys will then need to be replaced and programmed to the new SKREEM.

The SKREES Secret Key is an I.D. code that is unique to each SKREES. This code is programmed and stored in the SKREEM, engine controller and transponder chip (ignition key). When replacing the PCM it is necessary to program the secret key into the PCM.

NOTE: After replacing the PCM, you must reprogram pinion factor.

1. Turn the ignition on (transmission in park/neutral).
2. Use the DRBIII® and select THEFT ALARM, SKREEM then MISCELLANEOUS.
3. Select PCM REPLACED.
4. Enter secured access mode by entering the vehicle four-digit PIN.

NOTE: If three attempts are made to enter the secure access mode using an incorrect PIN, secured access mode will be locked out for one hour. To exit this lockout mode, turn the ignition to the run position for one hour then enter the correct PIN. (Ensure all accessories are turned off. Also monitor the battery state and connect a battery charger if necessary).

5. Press ENTER to transfer the secret key (the SKREEM will send the secret key to the PCM).

3.2.10 PROGRAMMING THE SKREEM

NOTE: If the PCM and the SKREEM are replaced at the same time, program the VIN into the PCM first. All vehicle keys will then need to be replaced and programmed to the new SKREEM.

1. Turn the ignition on (transmission in park/ neutral).
2. Use the DRBIII® and select THEFT ALARM, SKREEM then MISCELLANEOUS.
3. Select SKREEM MODULE REPLACEMENT (GASOLINE).
4. Program the vehicle four-digit PIN into the SKREEM.
5. Select COUNTRY CODE and enter the correct country.

NOTE: Be sure to enter the correct country code. If the incorrect country code is programmed into SKREEM, the SKREEM must be replaced.

6. Select UPDATE VIN (the SKREEM will learn the VIN from the PCM).
7. Press ENTER to transfer the VIN (the PCM will send the VIN to the SKREEM).
8. The DRBIII® will ask if you want to transfer the secret key. Select ENTER to transfer secret key from the PCM. This will ensure the current vehicle ignition keys will still operate the SKREES system.

3.2.11 PROGRAMMING THE IGNITION KEYS TO THE SKREEM

1. Turn the ignition on (transmission in park/ neutral).
2. Use the DRBIII® and select THEFT ALARM, SKREEM, then MISCELLANEOUS.
3. Select PROGRAM IGNITION KEYS.
4. Enter secured access mode by entering the vehicle four-digit PIN.

NOTE: A maximum of eight keys can be learned to each SKREEM AT ONE TIME. Once a key is learned to a SKREEM it (the key) cannot be transferred to another vehicle.

If ignition key programming is unsuccessful, the DRBIII® will display one of the following messages:

Programming Not Attempted - The DRBIII® attempts to read the programmed key status and there are no keys programmed in the SKIM memory.

Programming Key Failed - (Possible Used Key From Wrong Vehicle) - SKREEM is unable to program key due to one of the following:

– faulty ignition key transponder

– ignition key is programmed to another vehicle.

8 Keys Already Learned, Programming Not Done - SKIM transponder ID memory is full.

1. Obtain ignition keys to be programmed from customer (8 keys maximum)
2. Using the DRBIII®, erase all ignition keys by selecting MISCELLANEOUS and ERASE ALL CURRENT IGN. KEYS
3. Program all ignition keys.

Learned Key In Ignition - Ignition key transponder ID is currently programmed in SKREEM memory.

3.3 DIAGNOSTIC TROUBLE CODES

Each diagnostic trouble code is diagnosed by following a specific testing procedure. The diagnostic test procedures contain step-by-step instructions for determining the cause of trouble codes as well as no trouble code problems. It is not necessary to perform all of the tests in this book to diagnose an individual code.

Always begin by reading the diagnostic trouble codes using the DRBIII®.

3.3.1 HARD CODE

A diagnostic trouble code that comes back within one cycle of the ignition key is a hard code. This means that the defect is there every time the powertrain control module checks that circuit or function. Procedures in this manual verify if the DTC is a hard code at the beginning of each test. When it is not a hard code, an intermittent test must be performed.

DTC's that are for OBDII/Euro Stage III OBD monitors will not set with just the ignition key on. Comparing these to non-emission DTC's, they will seem like an intermittent. These DTC's require a set of parameters to be performed (The DRBIII®

pre-test screens will help with this for MONITOR DTC's), this is called a TRIP. All OBDII/Euro Stage III OBD DTCs will be set after one or in some cases two trip failures, and the MIL will be turned on. These DTC's require three successful, no failures, TRIPS to extinguish the MIL, followed by 40 warm-up cycles to erase the DTC. For further explanation of TRIPS, Pre-test screens, Warm-up cycles, and the use of the DRBIII®, refer to the On Board Diagnostic training booklet #81-699-97094.

3.3.2 INTERMITTENT CODE

A diagnostic trouble code that is not there every time the PCM checks the circuit is an intermittent DTC. Most intermittent DTC's are caused by wiring or connector problems. Defects that come and go like this are the most difficult to diagnose; they must be looked for under specific conditions that cause them. The following checks may assist you in identifying a possible intermittent problem:

- Visually inspect related wire harness connectors. Look for broken, bent, pushed out, or corroded terminals.
- Visually inspect the related harnesses. Look for chafed, pierced, or partially broken wire.
- Refer to any technical service bulletins that may apply.
- Use the DRBIII® data recorder or co-pilot.

3.3.3 STARTS SINCE SET COUNTER

The start since set counter counts the number of times the vehicle has been started since codes were last set, erased, or the battery was disconnected. The reset counter will count up to 255 start counts.

The number of starts helps determine when the trouble code actually happened. This is recorded by the PCM and can be viewed on the DRBIII® as STARTS since set.

When there are no trouble codes stored in memory, the DRBIII® will display NO DTC's Detected and the reset counter will show STARTS since clear = XXX.

3.3.4 DISTANCE SINCE MI SET

The Euro Stage III OBD directive requires that the distance traveled by the vehicle while the MI is activated must be available at any instant through the serial port on the standard data link connector. This feature works as follows:

1. If the MI is illuminated due to a fault, the distance count is updated (i.e. it is counting).
2. If there is a stale MI fault (i.e. the fault is still frozen in memory but the MI has been extinguished due to 3 good trips), the distance count is held (i.e. frozen).
3. If the distance count is being held due to (Item 2.) and the fault is cleared, the distance is cleared (set to zero).
4. If the distance count is being held due to (Item 2.) and another MI occurs, the distance count is reset (to) and begins updating anew.
5. If a fault occurs while the MI is already illuminated due to a previous fault (the distance count is updating), then the distance count continues to update w/out interruption.
6. If the MI is flashing due to active misfire and there is an active fault (i.e. matured fault for which 3 good trips have not occurred), the distance count behaves as the MI in ON.
7. If the MI is flashing due to active misfire and there is no active fault (i.e. the MI is flashing for a 1 malf.), the distance count behaves as if the MI is off (because it is not yet a matured fault).
8. The distance count is cleared whenever the fault is cleared. (Via 40 warm up cycles, or via scan tool).

3.4 USING THE DRBIII®

Refer to the DRBIII® user's guide for instructions and assistance with reading DTC's, erasing DTC's, and other DRBIII® functions.

3.5 DRBIII® ERROR MESSAGES AND BLANK SCREEN

Under normal operation, the DRBIII® will display one of only two error messages:

– User-Requested WARM Boot or User-Requested COLD Boot

If the DRBIII® should display any other error message, record the entire display and call the Star Center for information and assistance. This is a sample of such an error message display:

```
ver: 2.14
date: 26 Jul93
file: key_itf.cc
date: Jul 26 1993
line: 548
err: 0x1
User-Requested COLD Boot

Press MORE to switch between this display
  and the application screen.
Press F4 when done noting information.
```

3.5.1 DRBIII® DOES NOT POWER UP

If the LED's do not light or no sound is emitted at start up, check for loose cable connections or a bad cable. Check the vehicle battery voltage (data link

connector cavity 16). A minimum of 11 volts is required to adequately power the DRBIII®.

If all connections are proper between theDRBIII® and the vehicle or other devices, and the vehicle battery is fully charged, and inoperative DRBIII® may be the result of faulty cable or vehicle wiring.

3.5.2 DISPLAY IS NOT VISIBLE

Low temperatures will affect the visibility of the display. Adjust the contrast to compensate for this condition

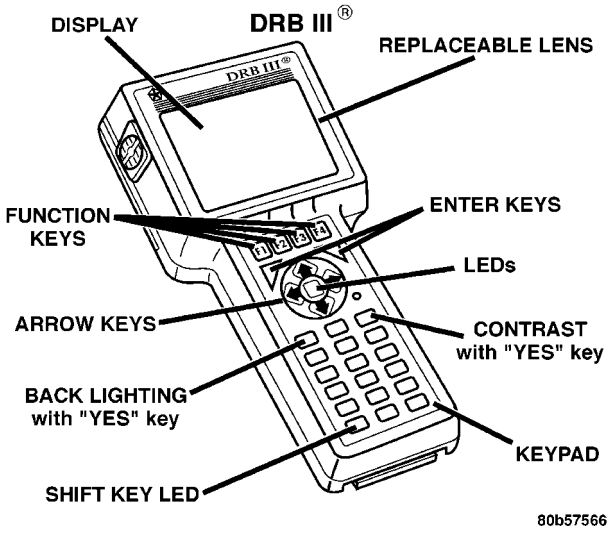

4.0 DISCLAIMERS, SAFETY, WARNINGS

4.1 DISCLAIMERS

All information, illustrations, and specifications contained in this manual are based on the latest information available at the time of publication. The right is reserved to make changes at any time without notice.

4.2 SAFETY

4.2.1 TECHNICIAN SAFETY INFORMATION

WARNING: ENGINES PRODUCE CARBON MONOXIDE THAT IS ODORLESS, CAUSES SLOWER REACTION TIME, AND CAN LEAD TO SERIOUS INJURY. WHEN THE ENGINE IS OPERATING, KEEP SERVICE AREAS WELL VENTILATED OR ATTACH THE VEHICLE EXHAUST SYSTEM TO THE SHOP EXHAUST REMOVAL SYSTEM.

Set the parking brake and block the wheels before testing or repairing the vehicle. It is especially important to block the wheels on front-wheel drive vehicles; the parking brake does not hold the drive wheels.

When servicing a vehicle, always wear eye protection, and remove any metal jewelry such as watchbands or bracelets that might make an inadvertent electrical contact.

When diagnosing a powertrain system problem, it is important to follow approved procedures where applicable. These procedures can be found in service manual procedures. Following these procedures is very important to the safety of individuals performing diagnostic tests.

4.2.2 VEHICLE PREPARATION FOR TESTING

Make sure the vehicle being tested has a fully charged battery. If it does not, false diagnostic codes or error messages may occur.

4.2.3 SERVICING SUB ASSEMBLIES

Some components of the powertrain system are intended to be serviced in assembly only. Attempting to remove or repair certain system subcomponents may result in personal injury and/or improper system operation. Only those components with approved repair and installation procedures in the service manual should be serviced.

4.2.4 DRBIII® SAFETY INFORMATION

WARNING: EXCEEDING THE LIMITS OF THE DRBIII® MULTIMETER IS DANGEROUS. IT CAN EXPOSE YOU TO SERIOUS INJURY. CAREFULLY READ AND UNDERSTAND THE CAUTIONS AND THE SPECIFICATION LIMITS.

Follow the vehicle manufacturer's service specifications at all times.

- Do not use the DRBIII® if it has been damaged.
- Do not use the test leads if the insulation is damaged or if metal is exposed.
- To avoid electrical shock, do not touch the test leads, tips, or the circuit being tested.
- Choose the proper range and function for the measurement. Do not try voltage or current measurements that may exceed the rated capacity.
- Do not exceed the limits shown in the table below:

FUNCTION	INPUT LIMIT
Volts	0 - 500 peak volts AC 0 - 500 volts DC
Ohms (resistance)*	0 - 1.12 megohms

FUNCTION	INPUT LIMIT
Frequency Measured Frequency Generated	0 - 10 kHz
Temperature	-58 - 1100°F -50 - 600°C

* Ohms cannot be measured if voltage is present. Ohms can be measured only in a non-powered circuit.

- Voltage between any terminal and ground must not exceed 500v DC or 500v peak AC.
- Use caution when measuring voltage above 25v DC or 25v AC.
- The circuit being tested must be protected by a 10A fuse or circuit breaker.
- Use the low current shunt to measure circuits up to 10A. Use the high current clamp to measure circuits exceeding 10A.
- When testing for the presence of voltage or current, make sure the meter is functioning correctly. Take a reading of a known voltage or current before accepting a zero reading.
- When measuring current, connect the meter in series with the load.
- Disconnect the live test lead before disconnecting the common test lead.
- When using the meter function, keep the DRBIII® away from spark plug or coil wires to avoid measuring error from outside interference.

4.3 WARNINGS AND CAUTIONS

4.3.1 ROAD TEST WARNINGS

Some complaints will require a test drive as part of the repair verification procedure. The purpose of the test drive is to try to duplicate the diagnostic code or symptom condition.

CAUTION: Before road testing a vehicle, be sure that all components are reassembled. During the test drive, do not try to read the DRBIII® screen while in motion. Do not hang the DRBIII® from the rear view mirror or operate it yourself. Have an assistant available to operate the DRBIII®.

4.3.2 VEHICLE DAMAGE CAUTIONS

Before disconnecting any control module, make sure the ignition is off. Failure to do so could damage the module.

When testing voltage or continuity at any control module, use the terminal side (not the wire end) of the connector. Do not probe a wire through the insulation; this will damage it and eventually cause it to fail because of corrosion.

Be careful when performing electrical tests so as to prevent accidental shorting of terminals. Such mistakes can damage fuses or components. Also, a second DTC could be set, making diagnosis of the original problem more difficult.

5.0 REQUIRED TOOLS AND EQUIPMENT

DRBIII® (diagnostic read-out box) scan tool
Evaporative System Diagnostic Kit #6917
fuel filler adapter #8382
fuel pressure adapter (C-6631) or #6539
fuel pressure kit (C-4799-B) or #5069
fuel release hose (C-4799-1)
Min Air flow fitting #6714
Pinout Box (Miller #8815)
jumper wires
ohmmeter
oscilloscope
vacuum gauge
voltmeter
12 volt test light minimum 25 ohms resistance with probe #6801

CAUTION: A 12 volt test light should not be used for the following circuits, damage to the powertrain controller will occur.

- 5 Volt Supply
- 8 Volt Supply
- J1850 PCI Bus
- CCD Bus
- CKP Sensor Signal
- CMP Sensor Signal
- Vehicle Speed Sensor Signal
- O2 Sensor Signal

6.0 GLOSSARY OF TERMS

ABS	anti-lock brake system
backfire, popback	fuel ignites in either the intake or the exhaust system
CKP	crank position sensor
CMP	camshaft position sensor
cuts out, misses	a steady pulsation or the inability of the engine to maintain a consistent rpm
DLC	data link connector (previously called engine diagnostic connector)

detonation, spark knock	a mild to severe ping, especially under loaded engine conditions
ECT	engine coolant temperature sensor
EGR	exhaust gas recirculation valve and system
generator	previously called alternator
hard start	The engine takes longer than usual to start, even though it is able to crank normally.
hesitation, sag, stumble	There is a momentary lack of response when the throttle is opened. This can occur at all vehicle speeds. If it is severe enough, the engine may stall.
IAT	intake/inlet air temperature sensor
IAC	idle air control motor
JTEC	Combined engine and transmission control module
lack of power, sluggish	The engine has less than expected power, with little or no increase in vehicle speed when the throttle is opened.
LDP	leak detection pump
MAP	manifold absolute pressure sensor
MIL	malfunction indicator lamp
MTV	manifold tuning valve
NGC	next generation controller
O2S	oxygen sensor
PCI	programmable communication interface
PCM	powertrain control module
PCV	positive crankcase ventilation
PEP	peripheral expansion port
poor fuel economy	There is significantly less fuel mileage than other vehicles of the same design ad configuration
rough, unstable, or erratic idle stalling	The engine runs unevenly at idle and causes the engine to shake if it is severe enough. The engine idle rpm may vary (called hunting). This condition may cause stalling if it is severe enough.
SBEC	single board engine controller
SKIM	sentry key immobilizer module
SKIS	sentry key immobilizer system
SKREEM	sentry key remote entry module
SKREES	sentry key remote entry system
start & stall	The engine starts but immediately dies.
surge	engine rpm fluctuation without corresponding change in throttle position sensor
TPS	throttle position sensor
TRS	transmission range sensor
VSS	vehicle speed sensor/signal

NOTES

7.0

DIAGNOSTIC INFORMATION AND PROCEDURES

Symptom:

*NO RESPONSE FROM PCM (PCI BUS) - NGC

POSSIBLE CAUSES
PCM PCI NO RESPONSE
POWERTRAIN CONTROL MODULE
PCI BUS CIRCUIT OPEN

TEST	ACTION	APPLICABILITY
1	Turn the ignition on. **NOTE: As soon as one or more module communicates with the DRB, answer the question.** With the DRB, enter Body then Body Computer With the DRB, enter Body then Electro/Mechanical Cluster (MIC). With the DRB, enter Passive Restraints then Airbag. Were you able to establish communications with any of the modules? Yes → Go To 2 No → Refer to symptom PCI Bus Communication Failure in the Communications category. Perform POWERTRAIN VERIFICATION TEST VER - 1 - NGC.	All
2	With the DRB read the Powertrain DTC's. This is to ensure power and grounds to the PCM are operational. **NOTE: If the DRB will not read PCM DTC's, follow the NO RESPONSE TO PCM (PCM SCI only) symptom path.** Turn the ignition off. Disconnect the PCM harness connectors. **CAUTION: DO NOT PROBE THE PCM HARNESS CONNECTORS. PROBING THE PCM HARNESS CONNECTORS WILL DAMAGE THE PCM TERMINALS RESULTING IN POOR TERMINAL TO PIN CONNECTION. INSTALL MILLER SPECIAL TOOL #8815 TO PERFORM DIAGNOSIS.** Use Scope input cable CH7058, Cable to Probe adapter CH7062, and the red and black test probes. Connect the scope input cable to the channel one connector on the DRB. Attach the red and black leads and the cable to probe adapter to the scope input cable. With the DRBIII® select Pep Module Tools. Select lab scope. Select Live Data. Select 12 volt square wave. Press F2 for Scope. Press F2 and use the down arrow to set voltage range to 20 volts. Press F2 again when complete. Connect the Black lead to the chassis ground. Connect the Red lead to the PCI Bus circuit in the appropriate terminal of special tool #8815. Turn the ignition on. Observe the voltage display on the DRB Lab Scope. Does the voltage pulse from 0 to approximately 7.5 volts? Yes → Replace and program the Powertrain Control Module in accordance with the Service Information. Perform POWERTRAIN VERIFICATION TEST VER - 1 - NGC. No → Repair the PCI Bus circuit for an open. Perform POWERTRAIN VERIFICATION TEST VER - 1 - NGC.	All

Symptom:

*NO RESPONSE FROM PCM (PCM SCI ONLY) - NGC

POSSIBLE CAUSES
CHECK PCM POWERS AND GROUNDS
PCM SCI TRANSMIT CIRCUIT SHORTED TO VOLTAGE
PCM SCI RECEIVE CIRCUIT SHORTED TO VOLTAGE
PCM SCI CIRCUITS SHORTED TOGETHER
PCM SCI TRANSMIT CIRCUIT SHORTED TO GROUND
PCM SCI RECEIVE CIRCUIT SHORTED TO GROUND
PCM SCI RECEIVE CIRCUIT OPEN
PCM SCI TRANSMIT CIRCUIT OPEN
POWERTRAIN CONTROL MODULE

TEST	ACTION	APPLICABILITY
1	Perform the symptom Checking PCM Power and Ground Circuits in the Driveability category. **NOTE: With the DRBIII® in the generic scan tool mode, attempt to communicate with the PCM.** **NOTE: If the DRBIII® can communicate with the PCM in the generic scan tool mode, it may not be necessary to perform this step.** Did the vehicle pass this test? Yes → Go To 2 No → Repair as necessary. Perform POWERTRAIN VERIFICATION TEST VER - 1 - NGC.	All
2	Turn the ignition off. Disconnect the DRBIII® from the DLC. Disconnect the PCM harness connectors. Turn the ignition on. Measure the voltage of the PCM SCI Transmit circuit at the Data Link harness connector (cav 7). Is the voltage above 1.0 volt? Yes → Repair the PCM SCI Transmit circuit for a short to voltage. Perform POWERTRAIN VERIFICATION TEST VER - 1 - NGC. No → Go To 3	All
3	Turn the ignition off. Disconnect the DRBIII® from the DLC. Disconnect the PCM harness connectors. Turn the ignition on. Measure the voltage of the PCM SCI Receive circuit at the Data Link harness connector (cav 12). Is the voltage above 1.0 volt? Yes → Repair the PCM SCI Receive circuit for a short to voltage. Perform POWERTRAIN VERIFICATION TEST VER - 1 - NGC. No → Go To 4	All

*NO RESPONSE FROM PCM (PCM SCI ONLY) - NGC — Continued

TEST	ACTION	APPLICABILITY
4	Turn the ignition off. Disconnect the DRBIII® from the DLC. Disconnect the PCM harness connectors. Measure the resistance between the PCM SCI Transmit circuit and the PCM SCI Receive circuit at the Data Link harness connector (cavs 7 and 12). Is the resistance below 5.0 ohms? Yes → Repair the short between the PCM SCI Transmit and the PCM SCI Receive circuits. Perform POWERTRAIN VERIFICATION TEST VER - 1 - NGC. No → Go To 5	All
5	Turn the ignition off. Disconnect the PCM harness connectors. Disconnect the DRBIII® from the DLC. Measure the resistance between ground and the PCM SCI Transmit circuit at the Data Link harness connector (cav 7). Is the resistance below 5.0 ohms? Yes → Repair the PCM SCI Transmit circuit for a short to ground. Perform POWERTRAIN VERIFICATION TEST VER - 1 - NGC. No → Go To 6	All
6	Turn the ignition off. Disconnect the PCM harness connector. Disconnect the DRBIII® from the DLC. Measure the resistance between ground and the PCM SCI Receive circuit in the Data Link harness connector (cav 12). Is the resistance below 5.0 ohms? Yes → Repair the PCM SCI Receive circuit for a short to ground. Perform POWERTRAIN VERIFICATION TEST VER - 1 - NGC. No → Go To 7	All
7	Turn the ignition off. Disconnect the PCM harness connector. Disconnect the DRBIII® from the DLC. **CAUTION: DO NOT PROBE THE PCM HARNESS CONNECTORS. PROBING THE PCM HARNESS CONNECTORS WILL DAMAGE THE PCM TERMINALS RESULTING IN POOR TERMINAL TO PIN CONNECTION. INSTALL MILLER SPECIAL TOOL #8815 TO PERFORM DIAGNOSIS.** Measure the resistance of the PCM SCI Receive circuit from the Data Link harness connector (cav 12) to the appropriate terminal of special tool #8815. Is the resistance below 5.0 ohms? Yes → Go To 8 No → Repair the PCM SCI Receive circuit for an open. Perform POWERTRAIN VERIFICATION TEST VER - 1 - NGC.	All

*NO RESPONSE FROM PCM (PCM SCI ONLY) - NGC — Continued

TEST	ACTION	APPLICABILITY
8	Turn the ignition off. Disconnect the PCM harness connector. Disconnect the DRBIII® from the DLC. **CAUTION: DO NOT PROBE THE PCM HARNESS CONNECTORS. PROBING THE PCM HARNESS CONNECTORS WILL DAMAGE THE PCM TERMINALS RESULTING IN POOR TERMINAL TO PIN CONNECTION. INSTALL MILLER SPECIAL TOOL #8815 TO PERFORM DIAGNOSIS.** Measure the resistance of the PCM SCI Transmit circuit from the Data Link harness connector (cav 7) to the appropriate terminal of special tool #8815. Is the resistance below 5.0 ohms? Yes → Go To 9 No → Repair the PCM SCI Transmit circuit for an open. Perform POWERTRAIN VERIFICATION TEST VER - 1 - NGC.	All
9	If there are no possible causes remaining, view repair. Repair Replace and program the Powertrain Control Module in accordance with the Service Information. Perform POWERTRAIN VERIFICATION TEST VER - 1 - NGC.	All

Symptom:

***NO RESPONSE FROM SENTRY KEY REMOTE ENTRY MODULE**

POSSIBLE CAUSES
ATTEMPT TO COMMUNICATE WITH THE BCM
GROUND CIRCUIT OPEN
FUSED IGNITION SWITCH OUTPUT CIRCUIT OPEN
FUSED B(+) CIRCUIT OPEN
OPEN PCI BUS CIRCUIT
SENTRY KEY REMOTE ENTRY MODULE

TEST	ACTION	APPLICABILITY
1	Turn the ignition on. With the DRB, enter Body then Body Computer. Was the DRB able to I/D or communicate with the BCM? Yes → Go To 2 No → Refer to the symptom list for problems related to no communication with the BCM. Perform SKREEM VERIFICATION TEST - VER 1A.	All
2	Turn the ignition off. Disconnect the SKREEM harness connector. Using a 12-volt test light connected to 12-volts, probe the Ground circuit. Is the test light illuminated? Yes → Go To 3 No → Repair the ground circuit for an open. Perform SKREEM VERIFICATION TEST - VER 1A.	All
3	Turn the ignition off. Disconnect the SKREEM harness connector. Turn the ignition on. Using a 12-volt test light connected to ground, probe the Fused Ignition Switch Output circuit. Is the test light illuminated? Yes → Go To 4 No → Repair the Fused Ignition Switch Output circuit for an open. Perform SKREEM VERIFICATION TEST - VER 1A.	All
4	Turn the ignition off. Disconnect the SKREEM harness connector. Using a 12-volt test light connected to ground, probe the Fused B(+) circuit. Is the test light illuminated? Yes → Go To 5 No → Repair the Fused B+ circuit for an open. Perform SKREEM VERIFICATION TEST - VER 1A.	All

*NO RESPONSE FROM SENTRY KEY REMOTE ENTRY MODULE — Continued

TEST	ACTION	APPLICABILITY
5	**Note: Ensure there is PCI Bus communication with other modules on the vehicle before proceeding. If not, refer to the symptom list from the menu and repair as necessary.** Disconnect the SKREEM harness connector. Use Scope input cable CH7058, Cable to Probe adapter CH7062, and the red and black test probes. Connect the scope input cable to the channel one connector on the DRBIII®. Attach the red and black leads and the cable to probe adapter to the scope input cable. With the DRBIII® select Pep Module Tools. Select lab scope. Select Live Data. Select 12 volt square wave. Press F2 for Scope. Press F2 and use the down arrow to set voltage range to 20 volts. Press F2 again when complete. Connect the Black lead to the chassis ground. Connect the Red lead to the PCI Bus circuit in the SKREEM connector. Turn the ignition on. Observe the voltage display on the DRBIII® Lab Scope. Does the voltage pulse from 0 to approximately 7.5 volts? Yes → Go To 6 No → Repair the PCI Bus circuit for an open. Perform SKREEM VERIFICATION TEST - VER 1A.	All
6	If there are no possible causes remaining, view repair. Repair Replace and program the Sentry Key Remote Entry Module in accordance with the Service Information. Perform SKREEM VERIFICATION TEST - VER 1A.	All

Symptom:

*NO RESPONSE FROM TRANSMISSION CONTROL MODULE - NGC

POSSIBLE CAUSES
NO RESPONSE FROM TRANSMISSION CONTROL MODULE
FUSED IGNITION SWITCH OUTPUT CIRCUIT OPEN
FUSED B(+) CIRCUIT OPEN
GROUND CIRCUIT(S) OPEN
PCI BUS CIRCUIT OPEN
POWERTRAIN CONTROL MODULE

TEST	ACTION	APPLICABILITY
1	Turn the ignition on. **Note: As soon as one or more module communicates with the DRB, answer the question.** With the DRB, attempt to communicate with the Instrument Cluster. With the DRB, attempt to communicate with the Airbag Control Module. Was the DRB able to I/D or establish communications with both of the modules? Yes → Go To 2 No → Refer to the Communications category and perform the appropriate symptom. Perform 40/41TE (NGC) TRANSMISSION VERIFICATION TEST - VER 1.	All
2	Turn the ignition off. Disconnect the PCM harness connectors. **CAUTION: DO NOT PROBE THE PCM HARNESS CONNECTORS. PROBING THE PCM HARNESS CONNECTORS WILL DAMAGE THE PCM TERMINALS RESULTING IN POOR TERMINAL TO PIN CONNECTION. INSTALL MILLER SPECIAL TOOL #8815 TO PERFORM DIAGNOSIS.** Turn the ignition on. Using a 12-volt test light connected to ground, probe both Fused Ignition Switch Output circuits (cavs 11 and 12) in the appropriate terminal of special tool #8815. **NOTE: The test light must illuminate brightly. Compare the brightness to that of a direct connection to the battery.** Is the test light illuminated for both circuits? Yes → Go To 3 No → Repair the Fused Ignition Switch Output circuit for an open. Refer to the wiring diagrams located in the Service Information. Perform 40/41TE (NGC) TRANSMISSION VERIFICATION TEST - VER 1.	All

*NO RESPONSE FROM TRANSMISSION CONTROL MODULE - NGC — Continued

TEST	ACTION	APPLICABILITY
3	Turn the ignition off. Disconnect the PCM harness connectors. **CAUTION: DO NOT PROBE THE PCM HARNESS CONNECTORS. PROBING THE PCM HARNESS CONNECTORS WILL DAMAGE THE PCM TERMINALS RESULTING IN POOR TERMINAL TO PIN CONNECTION. INSTALL MILLER SPECIAL TOOL #8815 TO PERFORM DIAGNOSIS.** Using a 12-volt test light connected to ground, probe the Fused B(+) circuit in the appropriate terminal of special tool #8815. **NOTE: The test light must illuminate brightly. Compare the brightness to that of a direct connection to the battery.** Is the test light illuminated? Yes → Go To 4 No → Repair the Fused B(+) circuit for an open. Refer to the wiring diagrams located in the Service Information. Perform 40/41TE (NGC) TRANSMISSION VERIFICATION TEST - VER 1.	All
4	Turn the ignition off. Disconnect the PCM harness connectors. **CAUTION: DO NOT PROBE THE PCM HARNESS CONNECTORS. PROBING THE PCM HARNESS CONNECTORS WILL DAMAGE THE PCM TERMINALS RESULTING IN POOR TERMINAL TO PIN CONNECTION. INSTALL MILLER SPECIAL TOOL #8815 TO PERFORM DIAGNOSIS.** Using a 12-volt test light connected to 12-volts, probe each ground circuit in the appropriate terminal of special tool #8815. **NOTE: The test light must illuminate brightly. Compare the brightness to that of a direct connection to the battery.** Is the light illuminated at all ground circuits? Yes → Go To 5 No → Repair the Ground circuit(s) for an open. Check the main ground connection to engine block and/or chassis. Refer to the wiring diagrams located in the Service Information. Perform 40/41TE (NGC) TRANSMISSION VERIFICATION TEST - VER 1.	All

*NO RESPONSE FROM TRANSMISSION CONTROL MODULE - NGC — Continued

TEST	ACTION	APPLICABILITY
5	**Note: Ensure there is PCI Bus communication with other modules on the vehicle before proceeding. If not, refer to the symptom list from the menu and repair as necessary.** Disconnect the PCM harness connectors. **CAUTION: DO NOT PROBE THE PCM HARNESS CONNECTORS. PROBING THE PCM HARNESS CONNECTORS WILL DAMAGE THE PCM TERMINALS RESULTING IN POOR TERMINAL TO PIN CONNECTION. INSTALL MILLER SPECIAL TOOL #8815 TO PERFORM DIAGNOSIS.** Use Scope input cable CH7058, Cable to Probe adapter CH7062, and the red and black test probes. Connect the scope input cable to the channel one connector on the DRB. Attach the red and black leads and the cable to probe adapter to the scope input cable. With the DRBIII® select Pep Module Tools. Select lab scope. Select Live Data. Select 12 volt square wave. Press F2 for Scope. Press F2 and use the down arrow to set voltage range to 20 volts. Press F2 again when complete. Connect the Black lead to the chassis ground. Connect the Red lead to the PCI Bus circuit in the appropriate terminal of special tool #8815. Turn the ignition on. Observe the voltage display on the DRB Lab Scope. Does the voltage pulse from 0 to approximately 7.5 volts? Yes → Go To 6 No → Repair the PCI Bus circuit for an open. Perform 40/41TE (NGC) TRANSMISSION VERIFICATION TEST - VER 1.	All
6	Using the schematics as a guide, inspect the wiring and connectors. Repair as necessary. Pay particular attention to all power and ground circuits. If there are no possible causes remaining, view repair. Repair Replace and program the Powertrain Control Module in accordance with the service information. WITH THE DRBIII® PERFORM QUICK LEARN AND REPROGRAM PINION FACTOR. Perform 40/41TE (NGC) TRANSMISSION VERIFICATION TEST - VER 1.	All

Symptom:
*PCI BUS COMMUNICATION FAILURE

POSSIBLE CAUSES
WIRING HARNESS INTERMITTENT
OPEN PCI BUS CIRCUIT AT THE DATA LINK CONNECTOR (DLC)
PCI BUS CIRCUIT SHORTED TO VOLTAGE
MODULE SHORT TO VOLTAGE
PCI BUS CIRCUIT SHORTED TO GROUND
MODULE SHORT TO GROUND

TEST	ACTION	APPLICABILITY
1	**Note: Determine which modules this vehicle is equipped with before beginning.** **Note: When attempting to communicate with any of the modules on this vehicle, the DRB will display 1 of 2 different communication errors: a NO RESPONSE message or a BUS +/- SIGNALS OPEN message.** Turn the ignition on. Using the DRB, attempt to communicate with the following control modules: Airbag Control Module Body Control Module MIC (INSTRUMENT CLUSTER) Was the DRBIII® able to communicate with one or more Module(s)? Yes → Go To 2 No → Go To 3	All
2	Turn the ignition off. **Note: Visually inspect the related wiring harness. Look for any chafed, pierced, pinched, or partially broken wires.** **Note: Visually inspect the related wire harness connectors. Look for broken, bent, pushed out, or corroded terminals.** **Note: If the DRB can not communicate with a single module, refer to the category list for the related symptom.** Were any problems found? Yes → Repair wiring harness/connectors as necessary. Perform BODY VERIFICATION TEST - VER 1. No → Test Complete.	All

*PCI BUS COMMUNICATION FAILURE — Continued

TEST	ACTION	APPLICABILITY
3	Turn the ignition off. Disconnect the PCM/ECM harness connector. Note: If equipped with NGC follow the caution below. **CAUTION: DO NOT PROBE THE PCM HARNESS CONNECTORS. PROBING THE PCM HARNESS CONNECTORS WILL DAMAGE THE PCM TERMINALS RESULTING IN POOR TERMINAL TO PIN CONNECTION. INSTALL MILLER SPECIAL TOOL #8815 TO PERFORM DIAGNOSIS.** Disconnect the DRB from the Data Link Connector (DLC). Disconnect the negative battery cable. Measure the resistance of the PCI Bus circuit between the Data Link Connector (DLC) and the PCM/ECM harness connector. Is the resistance below 5.0 ohms? Yes → Go To 4 No → Repair the PCI Bus circuit for an open. Perform BODY VERIFICATION TEST - VER 1.	All
4	**NOTE: Reconnect the PCM/ECM harness connector and the negative battery cable.** Turn the ignition on. Measure the voltage of the PCI Bus circuit at the Data Link Connector (DLC). Is the voltage above 7.0 volts? Yes → Go To 5 No → Go To 6	All
5	Turn the ignition off. Using a voltmeter, connect one end to the PCI Bus circuit at the DLC, and the other end to ground. **Note: When performing the next step turn the ignition off (wait one minute) before disconnecting any module. When the module is disconnected turn the ignition on to check for a short to voltage.** Turn the ignition on. While monitoring the voltmeter, disconnect each module the vehicle is equipped with one at a time. Is the voltage steadily above 7.0 volts with all the modules disconnected? Yes → Repair the PCI Bus circuit for a short to voltage. Perform BODY VERIFICATION TEST - VER 1. No → Replace the module that when disconnected the short to voltage was eliminated. Perform BODY VERIFICATION TEST - VER 1.	All

*PCI BUS COMMUNICATION FAILURE — Continued

TEST	ACTION	APPLICABILITY
6	Turn the ignition off. Disconnect the negative battery cable. Using a ohmmeter, connect one end to the PCI Bus circuit at the DLC, and the other end to ground. While monitoring the ohmmeter, disconnect each module the vehicle is equipped with one at a time. **NOTE: Total bus resistance to ground thru all of the modules is typically between 350 to 1000 ohms. The more modules on the bus, the lower the total bus resistance will be.** Is the resistance below 150.0 ohms with all the modules disconnected? Yes → Repair the PCI Bus circuit for a short to ground. Perform BODY VERIFICATION TEST - VER 1. No → Replace the module that when disconnected the short to ground was eliminated. Perform BODY VERIFICATION TEST - VER 1.	All

Symptom:
INTERMITTENT CONDITION

POSSIBLE CAUSES
INTERMITTENT CONDITION

TEST	ACTION	APPLICABILITY
1	**NOTE: The conditions that set the DTC are not present at this time. The following list may help in identifying the intermittent condition.** **WARNING: WHEN THE ENGINE IS OPERATING, DO NOT STAND IN A DIRECT LINE WITH THE FAN. DO NOT PUT YOUR HANDS NEAR THE PULLEYS, BELTS OR FAN. DO NOT WEAR LOOSE CLOTHING.** Refer to any Technical Service Bulletins (TSBs) that may apply. Review the DRB Freeze Frame information. If possible, try to duplicate the conditions under which the DTC set. With the engine running at normal operating temperature, monitor the DRB parameters related to the DTC while wiggling the wire harness. Look for parameter values to change and/or a DTC to set. Visually inspect the related wire harness. Look for any chafed, pierced, pinched, partially broken wires and broken, bent, pushed out, or corroded terminals. **CAUTION: NEVER PROBE THE PCM HARNESS CONNECTORS. PROBING THE PCM HARNESS CONNECTORS WILL DAMAGE THE PCM TERMINALS RESULTING IN POOR TERMINAL TO PIN CONNECTION. INSTALL MILLER SPECIAL TOOL #8815 TO PERFORM DIAGNOSIS.** Inspect and clean all PCM, engine, and chassis grounds. If numerous trouble codes were set, use a wire schematic to help you find any common ground or supply circuits. For any Relay DTCs, actuate the Relay with the DRBIII® and wiggle the related wire harness to try to interrupt the actuation. For intermittent Evaporative Emission trouble codes perform a visual and physical inspection of the related parts including hoses and the Fuel cap. A co-pilot, data recording, and/or lab scope should be used to help diagnose intermittent conditions. Use the DRBIII® to perform a System Test if one applies to failing component. Were any problems found during the above inspections? Yes → Repair as necessary No → Test Complete.	All

Symptom:

P0016-CRANKSHAFT/CAMSHAFT TIMING MISALIGNMENT

When Monitored and Set Condition:

P0016-CRANKSHAFT/CAMSHAFT TIMING MISALIGNMENT

When Monitored: Engine cranking and Engine running

Set Condition: Powertrain Control Module detects an error when the camshaft position is out of phase with the crankshaft position. One trip fault.

POSSIBLE CAUSES
INTERMITTENT CONDITION
CHECKING INTERMITTENT CMP SIGNAL WITH LAB
CMP WIRE HARNESS INSPECTION
TONE WHEEL/PULSE RING INSPECTION
CKP WIRE HARNESS INSPECTION
TONE WHEEL/PULSE RING INSPECTION
INTERMITTENT CKP SIGNAL
CAMSHAFT POSITION SENSOR
CRANKSHAFT POSITION SENSOR

TEST	ACTION	APPLICABILITY
1	**WARNING: WHEN THE ENGINE IS OPERATING, DO NOT STAND IN A DIRECT LINE WITH THE FAN. DO NOT PUT YOUR HANDS NEAR THE PULLEYS, BELTS OR FAN. DO NOT WEAR LOOSE CLOTHING.** Ignition on, engine not running. With the DRBIII®, read DTCs and record the related Freeze Frame data. With the DRBIII®, erase DTCs. Start the engine and run until operating temp is reached. (Closed Loop) If the DTC does not reset it may be necessary to take the vehicle on a test drive. Does the DTC reset? Yes → Go To 2 No → Refer to the INTERMITTENT CONDITION symptom in the Driveability category. Perform POWERTRAIN VERIFICATION TEST VER - 5 - NGC.	All

P0016-CRANKSHAFT/CAMSHAFT TIMING MISALIGNMENT — Continued

TEST	ACTION	APPLICABILITY
2	Turn the ignition off. With the DRBIII® lab scope probe and the Miller special tool #6801, backprobe the (K44) CMP Signal circuit at the CMP harness connector. **WARNING: WHEN THE ENGINE IS OPERATING, DO NOT STAND IN A DIRECT LINE WITH THE FAN. DO NOT PUT YOUR HANDS NEAR THE PULLEYS, BELTS OR FAN. DO NOT WEAR LOOSE CLOTHING.** Start the engine. Observe the lab scope screen. Are there any irregular or missing signals? Yes → Go To 3 No → Go To 6	All
3	Visually inspect the related wire harness. Look for any chafed, pierced, pinched, or partially broken wires. Visually inspect the related wire harness connectors. Look for broken, bent, pushed out, or corroded terminals. Ensure the Crankshaft Position Sensor and the Camshaft Position Sensor are properly installed and the mounting bolt(s) tight. Refer to any TSBs that may apply. Were any of the above conditions present? Yes → Repair as necessary Perform POWERTRAIN VERIFICATION TEST VER - 5 - NGC. No → Go To 4	All
4	Turn the ignition off. Remove the Camshaft Position Sensor. Inspect the Tone Wheel/Pulse Ring for damage, foreign material, or excessive movement. Were any problems found? Yes → Repair or replace the Tone Wheel/Pulse Ring as necessary. Perform POWERTRAIN VERIFICATION TEST VER - 5 - NGC. No → Go To 5	All
5	If there are no possible causes remaining, view repair. Repair Replace the Camshaft Position Sensor. Perform POWERTRAIN VERIFICATION TEST VER - 5 - NGC.	All
6	**WARNING: WHEN THE ENGINE IS OPERATING, DO NOT STAND IN A DIRECT LINE WITH THE FAN. DO NOT PUT YOUR HANDS NEAR THE PULLEYS, BELTS OR FAN. DO NOT WEAR LOOSE CLOTHING.** Start the engine. Gently tap on the Cam Position Sensor and wiggle the Sensor. Ignition on, engine not running. Inspect the Sensor harness connector, PCM harness connector, Sensor connector, and PCM connector for loose, bent, corroded, or pushed out pins/terminals. Inspect the related wire harness and the splices in the (K44) CMP circuits. Did the DTC reset? Yes → Repair the wiring/connector concerns as needed or replace the Camshaft Position Sensor. Perform POWERTRAIN VERIFICATION TEST VER - 5 - NGC. No → Go To 7	All

P0016-CRANKSHAFT/CAMSHAFT TIMING MISALIGNMENT — Continued

TEST	ACTION	APPLICABILITY
7	Turn the ignition off. With the DRBIII® lab scope probe and the Miller special tool #6801, backprobe the (K24) CKP Signal circuit at the CKP harness connector. **WARNING: WHEN THE ENGINE IS OPERATING, DO NOT STAND IN A DIRECT LINE WITH THE FAN. DO NOT PUT YOUR HANDS NEAR THE PULLEYS, BELTS OR FAN. DO NOT WEAR LOOSE CLOTHING.** Start the engine. Observe the lab scope screen. Are there any irregular or missing signals? Yes → Go To 8 No → Go To 11	All
8	Visually inspect the related wire harness. Look for any chafed, pierced, pinched, or partially broken wires. Visually inspect the related wire harness connectors. Look for broken, bent, pushed out, or corroded terminals. Ensure the Crankshaft Position Sensor and the Camshaft Position Sensor are properly installed and the mounting bolt(s) tight. Refer to any TSBs that may apply. Were any of the above conditions present? Yes → Repair as necessary Perform POWERTRAIN VERIFICATION TEST VER - 5 - NGC. No → Go To 9	All
9	Turn the ignition off. Remove the Crankshaft Position Sensor. Inspect the Tone Wheel/Flex Plate slots for damage, foreign material, or excessive movement. Were any problems found? Yes → Repair or replace the Tone Wheel/Flex Plate as necessary. Perform POWERTRAIN VERIFICATION TEST VER - 5 - NGC. No → Go To 10	All
10	If there are no possible causes remaining, view repair. Repair Replace the Crankshaft Position Sensor. Perform POWERTRAIN VERIFICATION TEST VER - 5 - NGC.	All

P0016-CRANKSHAFT/CAMSHAFT TIMING MISALIGNMENT — Continued

TEST	ACTION	APPLICABILITY
11	**NOTE: The conditions that set this DTC are not present at this time. The following test may help in identifying the intermittent condition.** **WARNING: WHEN THE ENGINE IS OPERATING, DO NOT STAND IN A DIRECT LINE WITH THE FAN. DO NOT PUT YOUR HANDS NEAR THE PULLEYS, BELTS OR FAN. DO NOT WEAR LOOSE CLOTHING.** Start the engine. Gently tap on the Crank Position Sensor and wiggle the CKP Sensor. Turn the ignition off. Inspect the Sensor harness connector, PCM harness connector, Sensor connector, and PCM connector for loose, bent, corroded, or pushed out pins/terminals. Inspect the related wire harness and the splices in the (K24) CKP circuits. Were any problems found? Yes → Repair the wiring/connector concerns as needed or replace the Crankshaft Position Sensor. Perform POWERTRAIN VERIFICATION TEST VER - 5 - NGC. No → Test Complete.	All

Symptom List:

P0031-O2 SENSOR 1/1 HEATER CIRCUIT LOW
P0037-O2 SENSOR 1/2 HEATER CIRCUIT LOW

Test Note: All symptoms listed above are diagnosed using the same tests. The title for the tests will be P0031-O2 SENSOR 1/1 HEATER CIRCUIT LOW.

When Monitored and Set Condition:

P0031-O2 SENSOR 1/1 HEATER CIRCUIT LOW

When Monitored: Battery voltage above 10.6 volts, ASD is powered up, and O2 heater is on.

Set Condition: Desired state does not match Actual state.

P0037-O2 SENSOR 1/2 HEATER CIRCUIT LOW

When Monitored: Battery voltage above 10.6 volts, ASD is powered up, and O2 heater is on.

Set Condition: Desired state does not match Actual state.

POSSIBLE CAUSES
O2 SENSOR HEATER OPERATION
O2 HEATER ELEMENT
O2 HEATER CONTROL CIRCUIT
O2 HEATER CONTROL SHORTED TO GROUND
PCM

TEST	ACTION	APPLICABILITY
1	Ignition on, engine not running. With the DRBIII®, read DTCs and record the related Freeze Frame data. Is the Good Trip Counter displayed and equal to zero? Yes → Go To 3 No → Go To 2	All

P0031-O2 SENSOR 1/1 HEATER CIRCUIT LOW — Continued

TEST	ACTION	APPLICABILITY
2	Turn the ignition off. **NOTE: Allow the O2 Sensor to cool down before continuing the test. The O2 Sensor voltage should stabilize at 5.0 volts. Raising the hood may help in reducing under hood temps quicker.** Ignition on, engine not running. With the DRBIII®, actuate the O2 Heater Test. With the DRBIII®, monitor O2 Sensor voltage for at least 2 minutes. Does the O2 Sensor voltage stay above 4.5 volts? Yes → Go To 3 No → Refer to the INTERMITTENT CONDITION symptom in the Driveability category. Perform POWERTRAIN VERIFICATION TEST VER - 5 - NGC.	All
3	Turn the ignition off. **NOTE: Allow the O2 sensor to cool down to room temperature.** Disconnect the O2 Sensor harness connector. Measure the resistance across the O2 Sensor Heater element component side. **NOTE: Heater Resistance Specification: 1/1 and 2/1 = 3.0 to 4.0 (NTK) or 2.0 to 3.0 (DENSO) ohms or 1/2 and 2/2 = 3.0 to 4.0 (NTK) ohms.** Is the O2 Sensor Heater element within specification? Yes → Go To 4 No → Replace the O2 Sensor. Perform POWERTRAIN VERIFICATION TEST VER - 5 - NGC.	All
4	Turn the ignition off. Disconnect the O2 Sensor harness connector. Ignition on, engine not running. With the DRBIII®, actuate the O2 Heater Test. Using a 12-volt test light connected to ground, probe the O2 Heater Control circuit in the O2 Sensor harness connector. Does the test illuminate brightly and flash on and off? Yes → Replace the O2 Sensor. Perform POWERTRAIN VERIFICATION TEST VER - 5 - NGC. No → Go To 5	All
5	Turn the ignition off. Disconnect the O2 Sensor harness connector. Disconnect the PCM harness connector. Measure the resistance between ground and the O2 Heater Control circuit in the O2 Sensor harness connector. Is the resistance below 5.0 ohms? Yes → Repair the short to ground in the O2 Sensor Heater Control circuit. Perform POWERTRAIN VERIFICATION TEST VER - 5 - NGC. No → NOTE: Before continuing, check the PCM harness connector terminals for corrosion, damage, or terminal push out. Repair as necessary. Replace and program the Powertrain Control Module in accordance with the Service Information. Perform POWERTRAIN VERIFICATION TEST VER - 5 - NGC.	All

Symptom List:

P0032-O2 SENSOR 1/1 HEATER CIRCUIT HIGH
P0038-O2 SENSOR 1/2 HEATER CIRCUIT HIGH

Test Note: All symptoms listed above are diagnosed using the same tests. The title for the tests will be P0032-O2 SENSOR 1/1 HEATER CIRCUIT HIGH.

When Monitored and Set Condition:

P0032-O2 SENSOR 1/1 HEATER CIRCUIT HIGH

When Monitored: Battery voltage above 10.6 volts, ASD is powered up, and O2 heater is off.

Set Condition: Desired state does not equal Actual state. One trip fault.

P0038-O2 SENSOR 1/2 HEATER CIRCUIT HIGH

When Monitored: Battery voltage above 10.6 volts, ASD is powered up, and O2 heater is off.

Set Condition: Desired state does not equal Actual state. One trip fault.

POSSIBLE CAUSES
O2 SENSOR HEATER OPERATION
O2 HEATER ELEMENT
O2 HEATER GROUND CIRCUIT OPEN
O2 SENSOR
O2 HEATER CONTROL SHORTED TO VOLTAGE
O2 HEATER CONTROL CIRCUIT OPEN
PCM

TEST	ACTION	APPLICABILITY
1	Ignition on, engine not running. With the DRBIII®, read DTCs and record the related Freeze Frame data. Is the Good Trip Counter displayed and equal to zero? Yes → Go To 3 No → Go To 2	All

P0032-O2 SENSOR 1/1 HEATER CIRCUIT HIGH — Continued

TEST	ACTION	APPLICABILITY
2	Turn the ignition off. **NOTE: Allow the O2 Sensor to cool down before continuing the test. The O2 Sensor voltage should stabilize at 5.0 volts. Raising the hood may help in reducing under hood temps quicker.** Ignition on, engine not running. With the DRBIII®, actuate the O2 Heater Test. With the DRBIII®, monitor O2 Sensor voltage for at least 2 minutes. Does the O2 Sensor voltage stay above 4.5 volts? Yes → Go To 3 No → Refer to the INTERMITTENT CONDITION symptom in the Driveability category. Perform POWERTRAIN VERIFICATION TEST VER - 5 - NGC.	All
3	Turn the ignition off. **NOTE: Allow the O2 sensor to cool down to room temperature.** Disconnect the O2 Sensor harness connector. Measure the resistance across the O2 Sensor Heater element component side. **NOTE: Heater Resistance Specification: 1/1 and 2/1 = 3.0 to 4.0 (NTK) or 2.0 to 3.0 (DENSO) ohms or 1/2 and 2/2 = 3.0 to 4.0 (NTK) ohms.** Is the O2 Sensor Heater element within specification? Yes → Go To 4 No → Replace the O2 Sensor. Perform POWERTRAIN VERIFICATION TEST VER - 5 - NGC.	All
4	Turn the ignition off. Disconnect the O2 Sensor harness connector. Ignition on, engine not running. With the DRBIII®, actuate the O2 Heater Test. Using a 12-volt test light connected to ground, probe the O2 Heater Control circuit in the O2 Sensor harness connector. Does the test illuminate brightly and flash on and off? Yes → Go To 5 No → Go To 6	All
5	Turn the ignition off. Disconnect the O2 Sensor harness connector. Measure the resistance between engine ground and the O2 Heater ground circuit in the O2 Sensor harness connector. Is the resistance below 5.0 ohms? Yes → Replace the O2 Sensor. Perform POWERTRAIN VERIFICATION TEST VER - 5 - NGC. No → Repair the open in the O2 Heater ground circuit. Perform POWERTRAIN VERIFICATION TEST VER - 5 - NGC.	All

P0032-O2 SENSOR 1/1 HEATER CIRCUIT HIGH — Continued

TEST	ACTION	APPLICABILITY
6	Turn the ignition off. Disconnect the O2 Sensor harness connector. Disconnect the PCM harness connector. Ignition on, engine not running. Measure the voltage on the O2 Heater Control circuit at the O2 Sensor harness connector. Does the voltmeter indicate any voltage present? Yes → Repair the short to voltage in the O2 Heater Control circuit. Perform POWERTRAIN VERIFICATION TEST VER - 5 - NGC. No → Go To 7	All
7	Turn the ignition off. Disconnect the O2 Sensor harness connector. Disconnect the PCM harness connector. **CAUTION: DO NOT PROBE THE PCM HARNESS CONNECTORS. PROBING THE PCM HARNESS CONNECTORS WILL DAMAGE THE PCM TERMINALS RESULTING IN POOR TERMINAL TO PIN CONNECTION. INSTALL MILLER SPECIAL TOOL #8815 TO PERFORM DIAGNOSIS.** Measure the resistance of the O2 Heater Control circuit from the O2 Sensor harness connector to the appropriate terminal of special tool #8815 Is the resistance below 5.0 ohms? Yes → NOTE: Before continuing, check the PCM harness connector terminals for corrosion, damage, or terminal push out. Repair as necessary. Replace and program the Powertrain Control Module in accordance with the Service Information. Perform POWERTRAIN VERIFICATION TEST VER - 5 - NGC. No → Repair the open in the O2 Heater Control circuit. Perform POWERTRAIN VERIFICATION TEST VER - 5 - NGC.	All

Symptom:

P0068-MANIFOLD PRESSURE/THROTTLE POSITION CORRELATION

When Monitored and Set Condition:

P0068-MANIFOLD PRESSURE/THROTTLE POSITION CORRELATION

When Monitored: With the engine running and no MAP Sensor or TP Sensor DTC's set.

Set Condition: The PCM determines a valid range in which the TP Sensor should be, at a given RPM/Load. The actual TP Sensor voltage is then compared to this value. If the TP Sensor voltage does not fall within the expected range within a predetermined time an error will be detected. Two Trip Fault.

POSSIBLE CAUSES
GOOD TRIP EQUAL TO ZERO
HIGH RESISTANCE IN MAP (K6) 5 VOLT SUPPLY CIRCUIT
RESISTANCE TO GROUND IN MAP (K6) 5 VOLT SUPPLY CIRCUIT
MAP SENSOR
HIGH RESISTANCE IN (K1) MAP SIGNAL CIRCUIT
RESISTANCE TO GROUND IN (K1) MAP SIGNAL CIRCUIT
HIGH RESISTANCE IN (K4) MAP GROUND CIRCUIT
PCM
TP SENSOR OPERATION
HIGH RESISTANCE IN TP SENSOR (K6) 5 VOLT SUPPLY CIRCUIT
RESISTANCE TO GROUND IN TP SENSOR (K6) 5 VOLT SUPPLY CIRCUIT
TP SENSOR
HIGH RESISTANCE IN (K22) TP SIGNAL CIRCUIT
RESISTANCE TO GROUND IN (K22) TP SENSOR SIGNAL CIRCUIT
HIGH RESISTANCE IN TP (K4) SENSOR GROUND CIRCUIT
PCM

P0068-MANIFOLD PRESSURE/THROTTLE POSITION CORRELATION — Continued

TEST	ACTION	APPLICABILITY
1	**NOTE: Diagnose any TP Sensor or MAP Sensor component DTCs before continuing.** **NOTE: The throttle plate and linkage must be free from binding and carbon build up, ensure the throttle plate is at the idle position.** Ignition on, engine not running. With the DRBIII®, read DTCs and record the related Freeze Frame data. Is the Good Trip Counter displayed and equal to zero? Yes → Go To 2 No → Refer to the INTERMITTENT CONDITION symptom in the Driveability category. Perform POWERTRAIN VERIFICATION TEST VER - 5 - NGC.	All
2	Start the engine. With the DRBIII®, monitor the MAP Sensor voltage. Snap the throttle. Does the MAP Sensor voltage vary from below 2.0 volts at idle to above 3.5 volts at WOT? Yes → Go To 3 No → Go To 11	All
3	Ignition on, engine not running. With the DRBIII®, monitor the TP Sensor voltage while slowly depressing the throttle pedal from the idle position to the wide open throttle position. Does the voltage start approximately at 0.8 volts and go above 3.5 volts with a smooth transition? Yes → Refer to the INTERMITTENT CONDITION symptom in the Driveability category. Perform POWERTRAIN VERIFICATION TEST VER - 5 - NGC. No → Go To 4	All
4	Turn the ignition off. Disconnect the TP Sensor harness connector. Disconnect the PCM harness connector. **CAUTION: DO NOT PROBE THE PCM HARNESS CONNECTORS. PROBING THE PCM HARNESS CONNECTORS WILL DAMAGE THE PCM TERMINALS RESULTING IN POOR TERMINAL TO PIN CONNECTION. INSTALL MILLER SPECIAL TOOL #8815 TO PERFORM DIAGNOSIS.** Measure the resistance of the (K6) 5 Volt Supply circuit from the TP Sensor harness connector to the appropriate terminal of special tool #8815. Is the resistance below 5.0 ohms? Yes → Go To 5 No → Repair the TP Sensor (K6) 5 Volt Supply circuit. Perform POWERTRAIN VERIFICATION TEST VER - 5 - NGC.	All

P0068-MANIFOLD PRESSURE/THROTTLE POSITION CORRELATION — Continued

TEST	ACTION	APPLICABILITY
5	Turn the ignition off. Disconnect the TP Sensor harness connector. Disconnect the PCM harness connector. Measure the resistance between ground and the (K6) 5 Volt Supply circuit at the TP Sensor harness connector. Is the resistance above 100k ohms? Yes → Go To 6 No → Repair the (K6) 5 Volt Supply circuit. Perform POWERTRAIN VERIFICATION TEST VER - 5 - NGC.	All
6	Turn the ignition off. Disconnect the TP Sensor harness connector. With the DRBIII®, monitor the TP Sensor voltage. Ignition on, engine not running. Connect a jumper wire between the (K22) TP Signal circuit and the (K4) Sensor ground circuit . Does the TP Sensor voltage change from approximately 4.9 volts to below 0.5 of a volt? Yes → Replace the Throttle Position Sensor. Perform POWERTRAIN VERIFICATION TEST VER - 5 - NGC. No → Go To 7	All
7	Turn the ignition off. Disconnect the TP Sensor harness connector. Disconnect the PCM harness connector. **CAUTION: DO NOT PROBE THE PCM HARNESS CONNECTORS. PROBING THE PCM HARNESS CONNECTORS WILL DAMAGE THE PCM TERMINALS RESULTING IN POOR TERMINAL TO PIN CONNECTION. INSTALL MILLER SPECIAL TOOL #8815 TO PERFORM DIAGNOSIS.** Measure the resistance of the (K22) TP Signal circuit from the TP Sensor harness connector to the appropriate terminal of special tool #8815. Is the resistance below 5.0 ohms? Yes → Go To 8 No → Repair the (K22) TP Signal circuit. Perform POWERTRAIN VERIFICATION TEST VER - 5 - NGC.	All
8	Turn the ignition off. Disconnect the TP Sensor harness connector. Disconnect the PCM harness connector. Measure the resistance between ground and the (K22) TP Signal circuit in the TP Sensor harness connector. Is the resistance above 100k ohms? Yes → Go To 9 No → Repair the (K22) TP Sensor Signal circuit. Perform POWERTRAIN VERIFICATION TEST VER - 5 - NGC.	All

P0068-MANIFOLD PRESSURE/THROTTLE POSITION CORRELATION — Continued

TEST	ACTION	APPLICABILITY
9	Turn the ignition off. Disconnect the TP Sensor harness connector. Disconnect the PCM harness connector. **CAUTION: DO NOT PROBE THE PCM HARNESS CONNECTORS. PROBING THE PCM HARNESS CONNECTORS WILL DAMAGE THE PCM TERMINALS RESULTING IN POOR TERMINAL TO PIN CONNECTION. INSTALL MILLER SPECIAL TOOL #8815 TO PERFORM DIAGNOSIS.** Measure the resistance of the (K4) Sensor ground circuit from the TP Sensor harness connector to the appropriate terminal of special tool #8815. Is the resistance below 5.0 ohms? Yes → Go To 10 No → Repair the (K4) Sensor Ground circuit. Perform POWERTRAIN VERIFICATION TEST VER - 5 - NGC.	All
10	**NOTE: Before continuing, check the PCM harness connector terminals for corrosion, damage, or terminal push out. Repair as necessary.** If there are no possible causes remaining, view repair. Repair Replace and program the Powertrain Control Module in accordance with the Service Information. Perform POWERTRAIN VERIFICATION TEST VER - 5 - NGC.	All
11	Turn the ignition off. Disconnect the MAP Sensor harness connector. Disconnect the PCM harness connector. **CAUTION: DO NOT PROBE THE PCM HARNESS CONNECTORS. PROBING THE PCM HARNESS CONNECTORS WILL DAMAGE THE PCM TERMINALS RESULTING IN POOR TERMINAL TO PIN CONNECTION. INSTALL MILLER SPECIAL TOOL #8815 TO PERFORM DIAGNOSIS.** Measure the resistance of the (K6) 5 Volt Supply circuit from the MAP Sensor harness connector to the appropriate terminal of special tool #8815. Is the resistance below 5.0 ohms? Yes → Go To 12 No → Repair the MAP (K6) 5 Volt Supply circuit. Perform POWERTRAIN VERIFICATION TEST VER - 5 - NGC.	All
12	Turn the ignition off. Disconnect the MAP Sensor harness connector. Disconnect the PCM harness connector. Measure the resistance between ground and the (K6) 5 Volt Supply circuit at the MAP Sensor harness connector. Is the resistance above 100k ohms? Yes → Go To 13 No → Repair the short to ground in the (K6) 5 Volt Supply circuit. Perform POWERTRAIN VERIFICATION TEST VER - 5 - NGC.	All

P0068-MANIFOLD PRESSURE/THROTTLE POSITION CORRELATION — Continued

TEST	ACTION	APPLICABILITY
13	Turn the ignition off. Disconnect the MAP Sensor harness connector. With the DRBIII®, monitor the MAP Sensor voltage. Ignition on, engine not running. Connect a jumper wire between the (K1) MAP Sensor Signal circuit and the (K4) Sensor ground circuit . Cycle the ignition switch from off to on. With the DRBIII®, monitor the MAP Sensor voltage. Does the DRBIII® display MAP voltage from approximately 4.9 volts to below 0.5 volt? Yes → Replace the MAP Sensor. Perform POWERTRAIN VERIFICATION TEST VER - 5 - NGC. No → Go To 14	All
14	Turn the ignition off. Disconnect the MAP Sensor harness connector. Disconnect the PCM harness connector. **CAUTION: DO NOT PROBE THE PCM HARNESS CONNECTORS. PROBING THE PCM HARNESS CONNECTORS WILL DAMAGE THE PCM TERMINALS RESULTING IN POOR TERMINAL TO PIN CONNECTION. INSTALL MILLER SPECIAL TOOL #8815 TO PERFORM DIAGNOSIS.** Measure the resistance of the (K1) MAP Signal circuit from the MAP Sensor harness connector to the appropriate terminal of special tool #8815. Is the resistance below 5.0 ohms? Yes → Go To 15 No → Repair the (K1) MAP Signal circuit. Perform POWERTRAIN VERIFICATION TEST VER - 5 - NGC.	All
15	Turn the ignition off. Disconnect the MAP Sensor harness connector. Disconnect the PCM harness connector. Measure the resistance between ground and the (K1) MAP Signal circuit at the MAP Sensor harness connector. Is the resistance above 100k ohms? Yes → Go To 16 No → Repair the (K1) MAP Signal circuit. Perform POWERTRAIN VERIFICATION TEST VER - 5 - NGC.	All
16	Turn the ignition off. Disconnect the MAP Sensor harness connector. Disconnect the PCM harness connector. **CAUTION: DO NOT PROBE THE PCM HARNESS CONNECTORS. PROBING THE PCM HARNESS CONNECTORS WILL DAMAGE THE PCM TERMINALS RESULTING IN POOR TERMINAL TO PIN CONNECTION. INSTALL MILLER SPECIAL TOOL #8815 TO PERFORM DIAGNOSIS.** Measure the resistance of the (K4) Sensor ground circuit from the MAP Sensor harness connector to the appropriate terminal of special tool #8815. Is the resistance below 5.0 ohms? Yes → Go To 17 No → Repair the (K4) Sensor Ground circuit. Perform POWERTRAIN VERIFICATION TEST VER - 5 - NGC.	All

P0068-MANIFOLD PRESSURE/THROTTLE POSITION CORRELATION — Continued

TEST	ACTION	APPLICABILITY
17	**NOTE: Before continuing, check the PCM harness connector terminals for corrosion, damage, or terminal push out. Repair as necessary.** If there are no possible causes remaining, view repair. Repair Replace and program the Powertrain Control Module in accordance with the Service Information. Perform POWERTRAIN VERIFICATION TEST VER - 5 - NGC.	All

Symptom:

P0071-AMBIENT TEMP SENSOR PERFORMANCE

When Monitored and Set Condition:

P0071-AMBIENT TEMP SENSOR PERFORMANCE

When Monitored: Engine off time is greater than 480 minutes. Ambient temperature is greater than 4°C (39°F).

Set Condition: After a calibrated amount of cool down time, the PCM compares the ECT Sensor, IAT Sensor and the Ambient Air Temperature Sensor values. If the Ambient Air Temperature Sensor value is not within 10°C (53°F) of the other two temperartue sensors an error is detected. Two Trip Fault.

POSSIBLE CAUSES
GOOD TRIP EQUAL TO ZERO
(K25) AAT SIGNAL CIRCUIT SHORTED TO BATTERY VOLTAGE
AMBIENT AIR TEMPERATURE SENSOR VOLTAGE BELOW 1.0 VOLT
(K25) AAT SIGNAL CIRCUIT OPEN
(K4) SENSOR GROUND CIRCUIT OPEN
(K25) AAT SIGNAL CIRCUIT SHORTED TO GROUND
(K25) AAT SIGNAL CIRCUIT SHORTED TO (K4) SENSOR GROUND
PCM LOW
PCM HIGH

TEST	ACTION	APPLICABILITY
1	Ignition on, engine not running. With the DRBIII®, read DTCs and record the related Freeze Frame data. Is the Good Trip Counter displayed and equal to zero? Yes → Go To 2 No → Refer to the INTERMITTENT CONDITION symptom in the Driveability category. Perform POWERTRAIN VERIFICATION TEST VER - 5 - NGC.	All

P0071-AMBIENT TEMP SENSOR PERFORMANCE — Continued

TEST	ACTION	APPLICABILITY
2	**NOTE: Visually inspect both the component and the PCM connectors. Look for damage, partially broken wires and backed out or corroded terminals** Turn the ignition off. Disconnect the Ambient Air Temp Sensor harness connector. Ignition on, engine not running. Measure the voltage of the (K25) AAT Signal circuit in the Ambient Air Temperature Sensor harness connector. Is the voltage above 5.2 volts? Yes → Repair the short to battery voltage in the (K25) AAT Signal circuit. Perform POWERTRAIN VERIFICATION TEST VER - 5 - NGC. No → Go To 3	All
3	Turn the ignition off. Disconnect the Ambient Air Temperature Sensor harness connector. Ignition on, engine not running. With the DRBIII®, read the Ambient Air Temperature Sensor voltage. Is the voltage above 4.9 volts? Yes → Go To 4 No → Go To 7	All
4	Turn the ignition off. Disconnect the Ambient Air Temperature Sensor harness connector. Using a jumper wire, jumper across the Ambient Air Temperature Sensor harness connector. Ignition on, engine not running. With the DRBIII®, read the Ambient Air Temperature voltage. Is the voltage below 1.0 volt? Yes → Replace the Ambient Air Temperature Sensor. Perform POWERTRAIN VERIFICATION TEST VER - 5 - NGC. No → Go To 5	All
5	Turn the ignition off. Disconnect the Ambient Air Temperature Sensor harness connector. Disconnect the PCM harness connector. **CAUTION: DO NOT PROBE THE PCM HARNESS CONNECTORS. PROBING THE PCM HARNESS CONNECTORS WILL DAMAGE THE PCM TERMINALS RESULTING IN POOR TERMINAL TO PIN CONNECTION. INSTALL MILLER SPECIAL TOOL #8815 TO PERFORM DIAGNOSIS.** Measure the resistance of the (K25) AAT Signal circuit from the Ambient Air Temperature Sensor harness connector to the appropriate terminal of special tool #8815. Is the resistance below 5.0 ohms? Yes → Go To 6 No → Repair the open in the (K25) AAT Signal circuit. Perform POWERTRAIN VERIFICATION TEST VER - 5 - NGC.	All

P0071-AMBIENT TEMP SENSOR PERFORMANCE — Continued

TEST	ACTION	APPLICABILITY
6	Turn the ignition off. Disconnect the Ambient Air Temperature Sensor harness connector. Disconnect the PCM harness connector. **CAUTION: DO NOT PROBE THE PCM HARNESS CONNECTORS. PROBING THE PCM HARNESS CONNECTORS WILL DAMAGE THE PCM TERMINALS RESULTING IN POOR TERMINAL TO PIN CONNECTION. INSTALL MILLER SPECIAL TOOL #8815 TO PERFORM DIAGNOSIS.** Measure the resistance of the (K167) Sensor ground circuit from the Ambient Air Temperature Sensor harness connector to the appropriate terminal of special tool #8815. Is the resistance below 5.0 ohms? Yes → NOTE: Before continuing, check the PCM harness connector terminals for corrosion, damage, or terminal push out. Repair as necessary. Replace and program the Powertrain Contorl Module in accordance with the Service Information. Perform POWERTRAIN VERIFICATION TEST VER - 5 - NGC. No → Repair the open in the (K4) Sensor ground circuit. Perform POWERTRAIN VERIFICATION TEST VER - 5 - NGC.	All
7	Turn the ignition off. Disconnect the Ambient Air Temperature Sensor harness connector. Disconnect the PCM harness connector. Measure the resistance between ground and the (K25) AAT Signal circuit. Is the resistance below 100 ohms? Yes → Repair the short to ground in the (K25) AAT Signal circuit. Perform POWERTRAIN VERIFICATION TEST VER - 5 - NGC. No → Go To 8	All
8	Turn the ignition off. Disconnect the Ambient Air Temperature Sensor harness connector. Disconnect the PCM harness connector. Measure the resistance between the (K25) AAT Signal circuit and the (K4) Sensor ground circuit in the Ambient Air Temperature Sensor harness connector. Is the resistance below 100 ohms? Yes → Repair the Sensor ground shorted to the (K25) AAT Signal circuit. Perform POWERTRAIN VERIFICATION TEST VER - 5 - NGC. No → NOTE: Before continuing, check the PCM harness connector terminals for corrosion, damage or terminal push out. Repair as necessary. Replace and program the Powertrain Control Module in accordance with the Service Information. Perform POWERTRAIN VERIFICATION TEST VER - 5 - NGC.	All

Symptom:

P0072-AMBIENT TEMP SENSOR LOW

When Monitored and Set Condition:

P0072-AMBIENT TEMP SENSOR LOW

When Monitored: The ignition key on.

Set Condition: Ambient Temperture Sensor is less than .0392 of a volt at the PCM. One Trip Fault.

POSSIBLE CAUSES
AMBIENT AIR TEMPERATURE SENSOR VOLTAGE BELOW 0.3 VOLTS
AMBIENT AIR TEMPERATURE SENSOR INTERNAL FAILURE
(K25) AAT SIGNAL CIRCUIT SHORTED TO GROUND
(K25) AAT SIGNAL CIRCUIT SHORTED TO (K4) SENSOR GROUND CIRCUIT
PCM

TEST	ACTION	APPLICABILITY
1	Ignition on, engine not running. With the DRBIII®, read the Ambient Air Temperature Sensor voltage. Is the voltage below 0.3 of a volt? Yes → Go To 2 No → Refer to the INTERMITTENT CONDITION symptom in the Driveability category. Perform POWERTRAIN VERIFICATION TEST VER - 5 - NGC.	All
2	Turn the ignition off. Disconnect the Ambient Air Temperature Sensor harness connector. Ignition on, engine not running. With the DRBIII®, read Ambient Air Temperature Sensor voltage. Is the voltage above 1.0 volt? Yes → Replace the Ambient Air Temperature Sensor. Perform POWERTRAIN VERIFICATION TEST VER - 5 - NGC. No → Go To 3	All
3	Turn the ignition off. Disconnect the Ambient Air Temperature Sensor harness connector. Disconnect the PCM harness connector. Measure the resistance between ground and the (K25) AAT Signal circuit in the Ambient Air Temperature Sensor harness connector. Is the resistance below 100 ohms? Yes → Repair the short to ground in the (K25) AAT Signal circuit. Perform POWERTRAIN VERIFICATION TEST VER - 5 - NGC. No → Go To 4	All

P0072-AMBIENT TEMP SENSOR LOW — Continued

TEST	ACTION	APPLICABILITY
4	Turn the ignition off. Disconnect the Ambient Air Temperature Sensor harness connector. Disconnect the PCM harness connector. Measure the resistance between the (K25) AAT Signal circuit and the (K4) Sensor ground circuit in the Ambient Air Temperature Sensor harness connector. Is the resistance below 100 ohms? Yes → Repair the (K4) Sensor ground shorted to the (K25) AAT Signal circuit. Perform POWERTRAIN VERIFICATION TEST VER - 5 - NGC. No → Go To 5	All
5	**NOTE: Before continuing, check the PCM harness connector terminals for corrosion, damage, or terminal push out. Repair as necessary.** If there are no possible causes remaining, view repair. Repair Replace and program the Powertrain Control Module in accordance with the Service Information. Perform POWERTRAIN VERIFICATION TEST VER - 5 - NGC.	All

Symptom:

P0073-AMBIENT TEMP SENSOR HIGH

When Monitored and Set Condition:

P0073-AMBIENT TEMP SENSOR HIGH

When Monitored: The ignition key on.

Set Condition: The Ambient Temperature Sensor voltage is greater than 4.94 volts. One Trip Fault.

POSSIBLE CAUSES
AMBIENT AIR TEMPERATURE SENSOR VOLTAGE ABOVE 4.8 VOLTS
(K25) AAT SIGNAL CIRCUIT SHORTED TO BATTERY VOLTAGE
AMBIENT AIR TEMPERATURE SENSOR INTERNAL FAILURE
(K25) AAT SIGNAL CIRCUIT OPEN
(K4) SENSOR GROUND CIRCUIT OPEN
PCM

TEST	ACTION	APPLICABILITY
1	Ignition on, engine not running. With the DRBIII®, read the Ambient Air Temperature Sensor voltage. Is the voltage above 4.8 volts? Yes → Go To 2 No → Refer to the INTERMITTENT CONDITION symptom in the Driveability category. Perform POWERTRAIN VERIFICATION TEST VER - 5 - NGC.	All
2	Turn the ignition off. Disconnect the Ambient Air Temperature Sensor harness connector. Ignition on, engine not running. Measure the voltage of the (K25) AAT Signal circuit in the Ambient Air Temperature Sensor harness connector. Is the voltage above 5.2 volts? Yes → Repair the short to battery voltage in the (K25) AAT Signal circuit. Perform POWERTRAIN VERIFICATION TEST VER - 5 - NGC. No → Go To 3	All

P0073-AMBIENT TEMP SENSOR HIGH — Continued

TEST	ACTION	APPLICABILITY
3	Turn the ignition off. Disconnect the Ambient Air Temperature Sensor harness connector. Connect a jumper wire between the (K145) AAT Signal circuit and the (K167) Sensor ground circuit in the Ambient Air Temperature Sensor harness connector. Ignition on, engine not running. With the DRBIII®, read Ambient Air Temperature Sensor voltage. Is the voltage below 1.0 volt? Yes → Replace the Ambient Air Temperature Sensor. Perform POWERTRAIN VERIFICATION TEST VER - 5 - NGC. No → Go To 4	All
4	Turn the ignition off. Disconnect the Ambient Air Temperature Sensor harness connector. Disconnect the PCM harness connector. **CAUTION: DO NOT PROBE THE PCM HARNESS CONNECTORS. PROBING THE PCM HARNESS CONNECTORS WILL DAMAGE THE PCM TERMINALS RESULTING IN POOR TERMINAL TO PIN CONNECTION. INSTALL MILLER SPECIAL TOOL #8815 TO PERFORM DIAGNOSIS.** Measure the resistance of the (K25) AAT Signal circuit from the Ambient Air Temperature Sensor harness connector to the appropriate terminal of special tool #8815. Is the resistance below 5.0 ohms? Yes → Go To 5 No → Repair the open in the (K25) AAT Signal circuit. Perform POWERTRAIN VERIFICATION TEST VER - 5 - NGC.	All
5	Turn the ignition off. Disconnect the Ambient Air Temperature Sensor harness connector. Disconnect the PCM harness connector. **CAUTION: DO NOT PROBE THE PCM HARNESS CONNECTORS. PROBING THE PCM HARNESS CONNECTORS WILL DAMAGE THE PCM TERMINALS RESULTING IN POOR TERMINAL TO PIN CONNECTION. INSTALL MILLER SPECIAL TOOL #8815 TO PERFORM DIAGNOSIS.** Measure the resistance of the (K4) Sensor ground circuit from the Ambient Air Temperature Sensor harness connector to the appropriate terminal of special tool #8815. Is the resistance below 5.0 ohms? Yes → Go To 6 No → Repair the open in the (K4) Sensor ground circuit. Perform POWERTRAIN VERIFICATION TEST VER - 5 - NGC.	All
6	**NOTE: Before continuing, check the PCM harness connector terminals for corrosion, damage, or terminal push out. Repair as necessary.** If there are no possible causes remaining, view repair. Repair Replace and program the Powertrain Control Module in accordance with the Service Information. Perform POWERTRAIN VERIFICATION TEST VER - 5 - NGC.	All

Symptom:

P0107-MAP SENSOR LOW

When Monitored and Set Condition:

P0107-MAP SENSOR LOW

When Monitored: Engine speed between 600 to 3500 RPM. TPS voltage less than 1.2 volts. Battery voltage greater than 10 volts.

Set Condition: The MAP sensor signal voltage is less than 0.0782 of a volt for 1.7 seconds. One trip Fault.

POSSIBLE CAUSES
MAP SENSOR VOLTAGE BELOW .078 VOLTS
(K6) 5 VOLT SUPPLY CIRCUIT SHORTED TO GROUND
(K6) 5 VOLT SUPPLY CIRCUIT OPEN
MAP SENSOR INTERNAL FAILURE
(K1) MAP SIGNAL CIRCUIT SHORTED TO GROUND
(K1) MAP SIGNAL CIRCUIT SHORTED TO (K4) SENSOR GROUND CIRCUIT
PCM (K6) 5 VOLT SUPPLY CIRCUIT
PCM (K1) MAP SENSOR SIGNAL CIRCUIT

TEST	ACTION	APPLICABILITY
1	Start the engine. With the DRBIII®, read the MAP Sensor voltage. Is the voltage below .078 of a volt? Yes → Go To 2 No → Refer to the INTERMITTENT CONDITION symptom in the Driveability category. Perform POWERTRAIN VERIFICATION TEST VER - 5 - NGC.	All
2	Turn the ignition off. Disconnect the MAP Sensor harness connector. Ignition on, engine not running. Measure the voltage of the (K6) 5 Volt Supply circuit in the MAP Sensor harness connector. Is the voltage between 4.75 to 5.2 volts? Yes → Go To 3 No → Go To 7	All

P0107-MAP SENSOR LOW — Continued

TEST	ACTION	APPLICABILITY
3	Turn the ignition off. Disconnect the MAP Sensor harness connector. Ignition on, engine not running. With the DRBIII®, monitor the MAP Sensor voltage. Is the voltage above 1.2 volts? Yes → Replace the MAP Sensor. Perform POWERTRAIN VERIFICATION TEST VER - 5 - NGC. No → Go To 4	All
4	Turn the ignition off. Disconnect the MAP Sensor harness connector. Disconnect the PCM harness connector. Measure the resistance between ground and the (K1) MAP Signal circuit at the MAP Sensor harness connector. Is the resistance below 100 ohms? Yes → Repair the short to ground in the (K1) MAP Signal circuit. Perform POWERTRAIN VERIFICATION TEST VER - 5 - NGC. No → Go To 5	All
5	Turn the ignition off. Disconnect the MAP Sensor harness connector. Disconnect the PCM harness connector. Measure the resistance between the (K1) MAP Signal circuit and the (K4) Sensor ground circuit in the MAP Sensor harness connector. Is the resistance below 100 ohms? Yes → Repair the (K4) Sensor ground shorted to the (K1) MAP Signal circuit. Perform POWERTRAIN VERIFICATION TEST VER - 5 - NGC. No → Go To 6	All
6	**NOTE: Before continuing, check the PCM harness connector terminals for corrosion, damage, or terminal push out. Repair as necessary.** If there are no possible causes remaining, view repair. Repair Replace and program the Powertrain Control Module in accordance with the Service Information. Perform POWERTRAIN VERIFICATION TEST VER - 5 - NGC.	All
7	Turn the ignition off. Disconnect the MAP Sensor harness connector. Disconnect the PCM harness connector. Measure the resistance of the (K6) 5 Volt Supply circuit in the MAP Sensor harness connector to ground. Is the resistance below 100 ohms? Yes → Repair the short to ground in the (K6) 5 Volt Supply circuit. Perform POWERTRAIN VERIFICATION TEST VER - 5 - NGC. No → Go To 8	All

P0107-MAP SENSOR LOW — Continued

TEST	ACTION	APPLICABILITY
8	Turn the ignition off. Disconnect the MAP Sensor harness connector. Disconnect the PCM harness connector. **CAUTION: DO NOT PROBE THE PCM HARNESS CONNECTORS. PROBING THE PCM HARNESS CONNECTORS WILL DAMAGE THE PCM TERMINALS RESULTING IN POOR TERMINAL TO PIN CONNECTION. INSTALL MILLER SPECIAL TOOL #8815 TO PERFORM DIAGNOSIS.** Measure the resistance of the (K6) 5 Volt Supply circuit from the MAP Sensor harness connector to the appropriate terminal of special tool #8815. Is the resistance below 5.0 ohms? Yes → Go To 9 No → Repair the open in the (K6) 5 Volt Supply circuit. Perform POWERTRAIN VERIFICATION TEST VER - 5 - NGC.	All
9	**NOTE: Before continuing, check the PCM harness connector terminals for corrosion, damage, or terminal push out. Repair as necessary.** If there are no possible causes remaining, view repair. Repair Replace and program the Powertrain Control Module in accordance with the Service Information. Perform POWERTRAIN VERIFICATION TEST VER - 5 - NGC.	All

Symptom:

P0108-MAP SENSOR HIGH

When Monitored and Set Condition:

P0108-MAP SENSOR HIGH

When Monitored: Engine speed between 600 to 3500 RPM. TP sensor voltage less than 1.2 volts for greater than 1.7 seconds. Battery voltage greater than 10 volts

Set Condition: The MAP sensor signal voltage is greater than 4.92 volts. One trip Fault.

POSSIBLE CAUSES
MAP SENSOR VOLTAGE ABOVE 4.9 VOLTS
(K1) MAP SIGNAL CIRCUIT SHORTED TO (K6) 5 VOLT SUPPLY CIRCUIT
(K1) MAP SIGNAL CIRCUIT SHORTED TO BATTERY VOLTAGE
MAP SENSOR INTERNAL FAILURE
(K1) MAP SIGNAL CIRCUIT OPEN
(K4) SENSOR GROUND CIRCUIT OPEN
PCM

TEST	ACTION	APPLICABILITY
1	Start the engine. With the DRBIII®, read the MAP Sensor voltage. Is the voltage above 4.9 volts? Yes → Go To 2 No → Refer to the INTERMITTENT CONDITION symptom in the Driveability category. Perform POWERTRAIN VERIFICATION TEST VER - 5 - NGC.	All
2	Turn the ignition off. Disconnect the MAP Sensor harness connector. Disconnect the PCM harness connector. Measure the resistance between the (K1) MAP Signal circuit and the (K6) 5 Volt Supply circuit in the MAP Sensor harness connector. Is the resistance below 100 ohms? Yes → Repair the (K1) MAP Signal circuit for a short to the (K6) 5 Volt Supply circuit. Perform POWERTRAIN VERIFICATION TEST VER - 5 - NGC. No → Go To 3	All

P0108-MAP SENSOR HIGH — Continued

TEST	ACTION	APPLICABILITY
3	Turn the ignition off. Disconnect the MAP Sensor harness connector. Ignition on, engine not running. Measure the voltage of the (K1) MAP Signal circuit in the MAP Sensor harness connector. Is the voltage above 5.2 volts? Yes → Repair the short to battery voltage in the (K1) MAP Signal circuit. Perform POWERTRAIN VERIFICATION TEST VER - 5 - NGC. No → Go To 4	All
4	Turn the ignition off. Disconnect the MAP Sensor harness connector. Connect a jumper wire between the (K1) MAP Sensor Signal circuit and the (K4) Sensor ground circuit. With the DRBIII®, monitor the MAP Sensor voltage. Ignition on, engine not running. Is the voltage below 1.0 volt? Yes → Replace the MAP Sensor. Perform POWERTRAIN VERIFICATION TEST VER - 5 - NGC. No → Go To 5	All
5	Turn the ignition off. Disconnect the MAP Sensor harness connector. Disconnect the PCM harness connector. **CAUTION: DO NOT PROBE THE PCM HARNESS CONNECTORS. PROBING THE PCM HARNESS CONNECTORS WILL DAMAGE THE PCM TERMINALS RESULTING IN POOR TERMINAL TO PIN CONNECTION. INSTALL MILLER SPECIAL TOOL #8815 TO PERFORM DIAGNOSIS.** Measure the resistance of the (K1) MAP Signal circuit from the MAP Sensor harness connector to the appropriate terminal of special tool #8815. Is the resistance below 5.0 ohms? Yes → Go To 6 No → Repair the open in the (K1) MAP Signal circuit. Perform POWERTRAIN VERIFICATION TEST VER - 5 - NGC.	All
6	Turn the ignition off. Disconnect the MAP Sensor harness connector. Disconnect the PCM harness connector. **CAUTION: DO NOT PROBE THE PCM HARNESS CONNECTORS. PROBING THE PCM HARNESS CONNECTORS WILL DAMAGE THE PCM TERMINALS RESULTING IN POOR TERMINAL TO PIN CONNECTION. INSTALL MILLER SPECIAL TOOL #8815 TO PERFORM DIAGNOSIS.** Measure the resistance of the (K4) Sensor ground circuit from the MAP Sensor harness connector to the appropriate terminal of special tool #8815. Is the resistance below 5.0 ohms? Yes → Go To 7 No → Repair the open in the (K4) Sensor ground circuit. Perform POWERTRAIN VERIFICATION TEST VER - 5 - NGC.	All

P0108-MAP SENSOR HIGH — Continued

TEST	ACTION	APPLICABILITY
7	**NOTE: Before continuing, check the PCM harness connector terminals for corrosion, damage, or terminal push out. Repair as necessary.** If there are no possible causes remaining, view repair. Repair Replace and program the Powertrain Control Module in accordance with the Service Information. Perform POWERTRAIN VERIFICATION TEST VER - 5 - NGC.	All

Symptom:
P0111-INTAKE AIR TEMPERATURE SENSOR PERFORMANCE

When Monitored and Set Condition:

P0111-INTAKE AIR TEMPERATURE SENSOR PERFORMANCE

When Monitored: Engine off time is greater than 480 minutes. Ambient temperature is greater than 4°C (39°F).

Set Condition: After a calibrated amount of cool down time, the PCM compares the ECT Sensor, IAT Sensor and the Ambient Air Temperature Sensor values. If the IAT Sensor value is not within calibrated temperature amount of the other two temperature sensors an error is detected. Two Trip Fault.

POSSIBLE CAUSES
GOOD TRIP EQUAL TO ZERO
(K21) IAT SIGNAL CIRCUIT SHORTED TO BATTERY VOLTAGE
IAT SENSOR VOLTAGE BELOW 1.0 VOLTS
(K21) IAT SIGNAL CIRCUIT OPEN
(K4) SENSOR GROUND CIRCUIT OPEN
(K21) IAT SIGNAL SHORTED TO GROUND
(K21) IAT SIGNAL CIRCUIT SHORTED TO (K4) SENSOR GROUND
PCM HIGH
PCM LOW

TEST	ACTION	APPLICABILITY
1	Ignition on, engine not running. With the DRBIII®, read DTCs and record the related Freeze Frame data. Is the Good Trip Counter displayed and equal to zero? Yes → Go To 2 No → Refer to the INTERMITTENT CONDITION symptom in the Driveability category. Perform POWERTRAIN VERIFICATION TEST VER - 5 - NGC.	All
2	Turn the ignition off. Disconnect the IAT Sensor harness connector. **NOTE: Visually inspect both the component and the PCM connectors. Look for damaged, partially broken wires, and backed out or corroded terminals.** Ignition on, engine not running. Measure the voltage on the (K21) IAT Signal circuit in the IAT Sensor harness connector. Is the voltage above 5.2 volts? Yes → Repair the short to battery voltage in the (K21) IAT Signal circuit. Perform POWERTRAIN VERIFICATION TEST VER - 5 - NGC. No → Go To 3	All

P0111-INTAKE AIR TEMPERATURE SENSOR PERFORMANCE — Continued

TEST	ACTION	APPLICABILITY
3	Turn the ignition off. Disconnect the IAT Sensor harness connector. Ignition on, engine not running. With the DRBIII®, read the IAT Sensor voltage. Is the voltage above 4.9 volts? Yes → Go To 4 No → Go To 7	All
4	Turn the ignition off. Disconnect the IAT Sensor harness connector. Using a jumper wire, jumper across the IAT Sensor harness connector. Ignition on, engine not running. With the DRBIII®, read the IAT Sensor voltage. Is the voltage below 1.0 volt? Yes → Replace the IAT Sensor. Perform POWERTRAIN VERIFICATION TEST VER - 5 - NGC. No → Go To 5	All
5	Turn the ignition off. Disconnect the IAT Sensor harness connector. Disconnect the PCM harness connector. **CAUTION: DO NOT PROBE THE PCM HARNESS CONNECTORS. PROBING THE PCM HARNESS CONNECTORS WILL DAMAGE THE PCM TERMINALS RESULTING IN POOR TERMINAL TO PIN CONNECTION. INSTALL MILLER SPECIAL TOOL #8815 TO PERFORM DIAGNOSIS.** Measure the resistance of the (K21) IAT Signal circuit from the IAT Sensor harness connector to the appropriate terminal of special tool #8815. Is the resistance below 5.0 ohms? Yes → Go To 6 No → Repair the open in the (K21) IAT Signal circuit. Perform POWERTRAIN VERIFICATION TEST VER - 5 - NGC.	All
6	Turn the ignition off. Disconnect the IAT Sensor harness connector. Disconnect the PCM harness connector. **CAUTION: DO NOT PROBE THE PCM HARNESS CONNECTORS. PROBING THE PCM HARNESS CONNECTORS WILL DAMAGE THE PCM TERMINALS RESULTING IN POOR TERMINAL TO PIN CONNECTION. INSTALL MILLER SPECIAL TOOL #8815 TO PERFORM DIAGNOSIS.** Measure the resistance of the (K4) Sensor ground circuit from the IAT Sensor harness connector to the appropriate terminal of special tool #8815. Is the resistance below 5.0 ohms? Yes → NOTE: Before continuing, check the PCM harness connector terminals for corrosion, damage, or terminal push out. Repair as necessary. Replace and program the Powertrain Control Module in accordance with the Service Information. Perform POWERTRAIN VERIFICATION TEST VER - 5 - NGC. No → Repair the open in the (K4) Sensor ground circuit. Perform POWERTRAIN VERIFICATION TEST VER - 5 - NGC.	All

P0111-INTAKE AIR TEMPERATURE SENSOR PERFORMANCE — Continued

TEST	ACTION	APPLICABILITY
7	Turn the ignition off. Disconnect the IAT Sensor harness connector. Disconnect the PCM harness connector. Measure the resistance between ground and the (K21) IAT Signal circuit in the IAT Sensor harness connector. Is the resistance below 100 ohms? Yes → Repair the short to ground in the (K21) IAT Signal circuit. Perform POWERTRAIN VERIFICATION TEST VER - 5 - NGC. No → Go To 8	All
8	Turn the ignition off. Disconnect the IAT Sensor harness connector. Disconnect the PCM harness connector. Measure the resistance between the (K4) Sensor ground circuit and the (K21) IAT Sensor Signal circuit at the IAT Sensor harness connector. Is the resistance below 5.0 ohms? Yes → Repair the (K4) Sensor ground circuit shorted to the (K21) IAT Signal circuit. Perform POWERTRAIN VERIFICATION TEST VER - 5 - NGC. No → NOTE: Before continuing, check the PCM harness connector terminals for corrosion, damage, or terminal push out. Repair as necessary. Replace and program the Powertrain Control Module in accordance with the Service Information. Perform POWERTRAIN VERIFICATION TEST VER - 5 - NGC.	All

Symptom:

P0112-INTAKE AIR TEMPERATURE SENSOR LOW

When Monitored and Set Condition:

P0112-INTAKE AIR TEMPERATURE SENSOR LOW

When Monitored: With the ignition on. Battery voltage greater than 10 volts.

Set Condition: The Intake Air Temperature (IAT) sensor voltage is less than 0.0784 of a volt. One trip Fault.

POSSIBLE CAUSES
IAT SENSOR VOLTAGE BELOW 1.0 VOLT
IAT SENSOR INTERNAL FAILURE
(K21) IAT SIGNAL SHORTED TO GROUND
(K21) IAT SIGNAL SHORTED TO (K4) SENSOR GROUND CIRCUIT
PCM

TEST	ACTION	APPLICABILITY
1	Ignition on, engine not running. With the DRBIII®, read the IAT Sensor voltage. Is the voltage below 1.0 volt? Yes → Go To 2 No → Refer to the INTERMITTENT CONDITION symptom in the Driveability category. Perform POWERTRAIN VERIFICATION TEST VER - 5 - NGC.	All
2	Turn the ignition off. Disconnect the IAT harness connector. Ignition on, engine not running. With the DRBIII®, read IAT Sensor voltage. Is the voltage above 1.0 volt? Yes → Replace the IAT Sensor. Perform POWERTRAIN VERIFICATION TEST VER - 5 - NGC. No → Go To 3	All
3	Turn the ignition off. Disconnect the IAT Sensor harness connector. Disconnect the PCM harness connector. Measure the resistance between ground and the (K21) IAT Signal circuit at the IAT Sensor harness connector. Is the resistance below 100 ohms? Yes → Repair the short to ground in the (K21) IAT Signal circuit. Perform POWERTRAIN VERIFICATION TEST VER - 5 - NGC. No → Go To 4	All

P0112-INTAKE AIR TEMPERATURE SENSOR LOW — Continued

TEST	ACTION	APPLICABILITY
4	Turn the ignition off. Disconnect the IAT Sensor harness connector. Disconnect the PCM harness connector. Measure the resistance between the (K21) IAT Sensor Signal circuit and the (K4) Sensor ground circuit in the IAT Sensor harness connector. Is the resistance below 100 ohms? Yes → Repair the (K4) Sensor ground shorted to the (K21) IAT Signal circuit. Perform POWERTRAIN VERIFICATION TEST VER - 5 - NGC. No → Go To 5	All
5	**NOTE: Before continuing, check the PCM harness connector terminals for corrosion, damage, or terminal push out. Repair as necessary.** If there are no possible causes remaining, view repair. Repair Replace and program the Powertrain Control Module in accordance with the Service Information. Perform POWERTRAIN VERIFICATION TEST VER - 5 - NGC.	All

Symptom:

P0113-INTAKE AIR TEMPERATURE SENSOR HIGH

When Monitored and Set Condition:

P0113-INTAKE AIR TEMPERATURE SENSOR HIGH

When Monitored: With the ignition on. Battery voltage greater than 10 volts.

Set Condition: The Intake Air Temperature (IAT) sensor voltage at the PCM is greater than 4.98 volts. One trip Fault.

POSSIBLE CAUSES
IAT SENSOR VOLTAGE ABOVE 4.6 VOLTS
(K21) IAT SIGNAL CIRCUIT SHORTED TO BATTERY VOLTAGE
IAT SENSOR INTERNAL FAILURE
(K21) IAT SIGNAL CIRCUIT OPEN
(K4) SENSOR GROUND CIRCUIT OPEN
PCM

TEST	ACTION	APPLICABILITY
1	Ignition on, engine not running. With the DRBIII®, read the IAT Sensor voltage. Is the voltage above 4.6 volts? Yes → Go To 2 No → Refer to the INTERMITTENT CONDITION symptom in the Driveability category. Perform POWERTRAIN VERIFICATION TEST VER - 5 - NGC.	All
2	Turn the ignition off. Disconnect the IAT Sensor harness connector. Ignition on, engine not running. Measure the voltage of the (K21) IAT Signal circuit in the IAT Sensor harness connector. Is the voltage above 5.2 volts? Yes → Repair the short to battery voltage in the (K21) IAT Signal circuit. Perform POWERTRAIN VERIFICATION TEST VER - 5 - NGC. No → Go To 3	All

P0113-INTAKE AIR TEMPERATURE SENSOR HIGH — Continued

TEST	ACTION	APPLICABILITY
3	Turn the ignition off. Disconnect the IAT harness connector. Connect a jumper wire between the (K21) IAT Signal circuit and the (K4) Sensor ground circuit in the IAT harness connector. Ignition on, engine not running. With the DRBIII®, read IAT voltage. Is the voltage below 1.0 volt? Yes → Replace the IAT Sensor. Perform POWERTRAIN VERIFICATION TEST VER - 5 - NGC. No → Go To 4	All
4	Turn the ignition off. Disconnect the IAT Sensor harness connector. Disconnect the PCM harness connector. **CAUTION: DO NOT PROBE THE PCM HARNESS CONNECTORS. PROBING THE PCM HARNESS CONNECTORS WILL DAMAGE THE PCM TERMINALS RESULTING IN POOR TERMINAL TO PIN CONNECTION. INSTALL MILLER SPECIAL TOOL #8815 TO PERFORM DIAGNOSIS.** Measure the resistance of the (K21) IAT Signal circuit from the IAT Sensor harness connector to the appropriate terminal of special tool #8815. Is the resistance below 5.0 ohms? Yes → Go To 5 No → Repair the open in the (K21) IAT Signal circuit. Perform POWERTRAIN VERIFICATION TEST VER - 5 - NGC.	All
5	Turn the ignition off. Disconnect the IAT Sensor harness connector. Disconnect the PCM harness connector. **CAUTION: DO NOT PROBE THE PCM HARNESS CONNECTORS. PROBING THE PCM HARNESS CONNECTORS WILL DAMAGE THE PCM TERMINALS RESULTING IN POOR TERMINAL TO PIN CONNECTION. INSTALL MILLER SPECIAL TOOL #8815 TO PERFORM DIAGNOSIS.** Measure the resistance of the (K4) Sensor ground circuit from the IAT Sensor harness connector to the appropriate terminal of special tool #8815. Is the resistance below 5.0 ohms? Yes → Go To 6 No → Repair the open in the (K4) Sensor ground circuit. Perform POWERTRAIN VERIFICATION TEST VER - 5 - NGC.	All
6	**NOTE: Before continuing, check the PCM harness connector terminals for corrosion, damage, or terminal push out. Repair as necessary.** If there are no possible causes remaining, view repair. Repair Replace and program the Powertrain Control Module in accordance with the Service Information. Perform POWERTRAIN VERIFICATION TEST VER - 5 - NGC.	All

Symptom:

P0116-ENGINE COOLANT TEMPERATURE PERFORMANCE

When Monitored and Set Condition:

P0116-ENGINE COOLANT TEMPERATURE PERFORMANCE

When Monitored: Engine off time is greater than 480 minutes. Ambient temperature is greater than 4°C (39°F).

Set Condition: After a calibrated amount of cool down time, the PCM compares the ECT Sensor, IAT Sensor and the Ambient Air Temperature Sensor values. If the ECT Sensor value is not within calibrated temperature amount of the other two temperature sensors an error is detected. Two Trip Fault.

POSSIBLE CAUSES
GOOD TRIP EQUAL TO ZERO
(K2) ECT SIGNAL CIRCUIT SHORTED TO BATTERY VOLTAGE
ECT SENSOR VOLTAGE BELOW 1.0 VOLT
(K2) ECT SIGNAL CIRCUIT OPEN
(K4) SENSOR GROUND CIRCUIT OPEN
(K2) ECT SIGNAL CIRCUIT SHORTED TO GROUND
(K2) ECT SIGNAL SHORTED TO (K4) SENSOR GROUND
PCM HIGH
PCM LOW

TEST	ACTION	APPLICABILITY
1	**NOTE: Due to the fact that the PCM compares the IAT, AAT and ECT sensor to see if they are within a calibrated temp of one another, the use of a block heater can cause false readings for the PCM. Check with the customer to see if they use a block heater.** Ignition on, engine not running. With the DRBIII®, read DTCs and record the related Freeze Frame data. Is the Good Trip Counter displayed and equal to zero? Yes → Go To 2 No → Refer to the INTERMITTENT CONDITION symptom in the Driveability category. Perform POWERTRAIN VERIFICATION TEST VER - 5 - NGC.	All

P0116-ENGINE COOLANT TEMPERATURE PERFORMANCE — Continued

TEST	ACTION	APPLICABILITY
2	Turn the ignition off. Disconnect the ECT Sensor harness connector. **NOTE: Visually inspect both the component and the PCM connectors. Look for damaged, partially broken wires, and backed out or corroded terminals.** Ignition on, engine not running. Measure the voltage on the (K2) ECT Signal circuit in the ECT Sensor harness connector. Is the voltage above 5.2 volts? Yes → Repair the short to battery voltage in the (K2) ECT Signal circuit. Perform POWERTRAIN VERIFICATION TEST VER - 5 - NGC. No → Go To 3	All
3	Turn the ignition off. Disconnect the ECT Sensor harness connector. Ignition on, engine not running. With the DRBIII®, read the ECT Sensor voltage. Is the voltage above 4.6 volts? Yes → Go To 4 No → Go To 7	All
4	Turn the ignition off. Disconnect the ECT Sensor harness connector. Using a jumper wire, jumper across the ECT Sensor harness connector. Ignition on, engine not running. With the DRBIII®, read the ECT Sensor voltage. Is the voltage below 1.0 volt? Yes → Replace the ECT Sensor. Perform POWERTRAIN VERIFICATION TEST VER - 5 - NGC. No → Go To 5	All
5	Turn the ignition off. Disconnect the ECT Sensor harness connector. Disconnect the PCM harness connector. **CAUTION: DO NOT PROBE THE PCM HARNESS CONNECTORS. PROBING THE PCM HARNESS CONNECTORS WILL DAMAGE THE PCM TERMINALS RESULTING IN POOR TERMINAL TO PIN CONNECTION. INSTALL MILLER SPECIAL TOOL #8815 TO PERFORM DIAGNOSIS.** Measure the resistance of the (K2) ECT Signal circuit from the ECT Sensor harness connector to the appropriate terminal of special tool #8815. Is the resistance below 5.0 ohms? Yes → Go To 6 No → Repair the open in the (K2) ECT Signal circuit. Perform POWERTRAIN VERIFICATION TEST VER - 5 - NGC.	All

P0116-ENGINE COOLANT TEMPERATURE PERFORMANCE — Continued

TEST	ACTION	APPLICABILITY
6	Turn the ignition off. Disconnect the ECT harness connector. Disconnect the PCM harness connector. **CAUTION: DO NOT PROBE THE PCM HARNESS CONNECTORS. PROBING THE PCM HARNESS CONNECTORS WILL DAMAGE THE PCM TERMINALS RESULTING IN POOR TERMINAL TO PIN CONNECTION. INSTALL MILLER SPECIAL TOOL #8815 TO PERFORM DIAGNOSIS.** Measure the resistance of the (K4) Sensor ground circuit from the ECT Sensor harness connector to the appropriate terminal of special tool # 8815. Is the resistance below 5.0 ohms? Yes → NOTE: Before continuing, check the PCM harness connector terminals for corrosion, damage, or terminal push out. Repair as necessary. Replace and program the Powertrain Control Module in accordance with the Service Information. Perform POWERTRAIN VERIFICATION TEST VER - 5 - NGC. No → Repair the open in the (K4) Sensor ground circuit. Perform POWERTRAIN VERIFICATION TEST VER - 5 - NGC.	All
7	Disconnect the ECT Sensor harness connector. Turn the ignition off. Disconnect the PCM harness connector. Measure the resistance between ground and the (K2) ECT Signal circuit in the ECT Sensor harness connector. Is the resistance below 100 ohms? Yes → Repair the short to ground in the (K2) ECT Signal circuit. Perform POWERTRAIN VERIFICATION TEST VER - 5 - NGC. No → Go To 8	All
8	Turn the ignition off. Disconnect the ECT Sensor harness connector. Disconnect the PCM harness connector. Measure the resistance between the (K2) ECT Sensor Signal circuit and the (K4) Sensor ground circuit at the ECT Sensor harness connector. Is the resistance below 5.0 ohms? Yes → Repair the (K4) Sensor ground shorted to the (K2) ECT Sensor Signal circuit. Perform POWERTRAIN VERIFICATION TEST VER - 5 - NGC. No → NOTE: Before continuing, check the PCM harness connector terminals for corrosion, damage, or terminal push out. Repair as necessary. Replace and program the Powertrain Control Module in accordance with the Service Information. Perform POWERTRAIN VERIFICATION TEST VER - 5 - NGC.	All

Symptom:

P0117-ENGINE COOLANT TEMPERATURE SENSOR LOW

When Monitored and Set Condition:

P0117-ENGINE COOLANT TEMPERATURE SENSOR LOW

When Monitored: With the ignition on. Battery voltage greater than 10 volts.

Set Condition: The Engine Coolant Temperature (ECT) sensor circuit voltage at the PCM is less than 0.0782 of a volt. One Trip Fault.

POSSIBLE CAUSES
ECT SENSOR VOLTAGE BELOW 1.0 VOLTS
ECT SENSOR INTERNAL FAILURE
(K2) ECT SIGNAL SHORTED TO GROUND
(K2) ECT SIGNAL SHORTED TO (K4) SENSOR GROUND CIRCUIT
PCM

TEST	ACTION	APPLICABILITY
1	Ignition on, engine not running. With the DRBIII®, read the ECT Sensor voltage. Is the voltage below 1.0 volt? Yes → Go To 2 No → Refer to the INTERMITTENT CONDITION symptom in the Driveability category. Perform POWERTRAIN VERIFICATION TEST VER - 5 - NGC.	All
2	Turn the ignition off. Disconnect the ECT harness connector. Ignition on, engine not running. With the DRBIII®, read ECT Sensor voltage. Is the voltage between 4.8 and 5.2 volts? Yes → Replace the ECT Sensor. Perform POWERTRAIN VERIFICATION TEST VER - 5 - NGC. No → Go To 3	All
3	Turn the ignition off. Disconnect the ECT Sensor harness connector. Disconnect the PCM harness connector. Measure the resistance between ground and the (K2) ECT Signal circuit in the ECT Sensor harness connector. Is the resistance below 100 ohms? Yes → Repair the ground shorted to the (K2) ECT Signal circuit. Perform POWERTRAIN VERIFICATION TEST VER - 5 - NGC. No → Go To 4	All

P0117-ENGINE COOLANT TEMPERATURE SENSOR LOW — Continued

TEST	ACTION	APPLICABILITY
4	Turn the ignition off. Disconnect the ECT Sensor harness connector. Disconnect the PCM harness connector. Measure the resistance between the (K2) ECT Sensor Signal circuit and the (K4) Sensor ground circuit in the ECT Sensor harness connector. Is the resistance below 100 ohms? Yes → Repair the (K4) Sensor ground shorted to the (K2) ECT Sensor Signal circuit. Perform POWERTRAIN VERIFICATION TEST VER - 5 - NGC. No → Go To 5	All
5	**NOTE: Before continuing, check the PCM harness connector terminals for corrosion, damage, or terminal push out. Repair as necessary.** If there are no possible causes remaining, view repair. Repair Replace and program the Powertrain Control Module in accordance with the Service Information. Perform POWERTRAIN VERIFICATION TEST VER - 5 - NGC.	All

Symptom:

P0118-ENGINE COOLANT TEMPERATURE SENSOR HIGH

When Monitored and Set Condition:

P0118-ENGINE COOLANT TEMPERATURE SENSOR HIGH

When Monitored: With the ignition on. Battery voltage greater than 10 volts.

Set Condition: The Engine Coolant Temperature (ECT) sensor voltage at the PCM is greater than 4.98 volts. One trip Fault.

POSSIBLE CAUSES
ECT SENSOR VOLTAGE ABOVE 4.9 VOLTS
(K2) ECT SIGNAL CIRCUIT SHORTED TO BATTERY VOLTAGE
ECT SENSOR INTERNAL FAILURE
(K2) ECT SIGNAL CIRCUIT OPEN
(K4) SENSOR GROUND CIRCUIT OPEN
PCM

TEST	ACTION	APPLICABILITY
1	Ignition on, engine not running. With the DRBIII®, read the ECT Sensor voltage. Is the voltage above 4.9 volts? Yes → Go To 2 No → Refer to the INTERMITTENT CONDITION symptom in the Driveability category. Perform POWERTRAIN VERIFICATION TEST VER - 5 - NGC.	All
2	Turn the ignition off. Disconnect the ECT Sensor harness connector. Ignition on, engine not running. Measure the voltage of the (K2) ECT Signal circuit in the ECT Sensor harness connector. Is the voltage above 5.2 volts? Yes → Repair the short to battery voltage in the (K2) ECT Signal circuit. Perform POWERTRAIN VERIFICATION TEST VER - 5 - NGC. No → Go To 3	All

P0118-ENGINE COOLANT TEMPERATURE SENSOR HIGH — Continued

TEST	ACTION	APPLICABILITY
3	Turn the ignition off. Disconnect the ECT harness connector. Connect a jumper wire between the (K2) ECT Signal circuit and the (K4) Sensor ground circuit in the ECT harness connector. Ignition on, engine not running. With the DRBIII®, read ECT Sensor voltage. Is the voltage below 1.0 volt? Yes → Replace the ECT Sensor. Perform POWERTRAIN VERIFICATION TEST VER - 5 - NGC. No → Go To 4	All
4	Turn the ignition off. Disconnect the ECT Sensor harness connector. Disconnect the PCM harness connector. **CAUTION: DO NOT PROBE THE PCM HARNESS CONNECTORS. PROBING THE PCM HARNESS CONNECTORS WILL DAMAGE THE PCM TERMINALS RESULTING IN POOR TERMINAL TO PIN CONNECTION. INSTALL MILLER SPECIAL TOOL #8815 TO PERFORM DIAGNOSIS.** Measure the resistance of the (K2) ECT Signal circuit from the ECT Sensor harness connector to the appropriate terminal of special tool #8815. Is the resistance below 5.0 ohms? Yes → Go To 5 No → Repair the open in the (K2) ECT Signal circuit. Perform POWERTRAIN VERIFICATION TEST VER - 5 - NGC.	All
5	Turn the ignition off. Disconnect the ECT Sensor harness connector. Disconnect the PCM harness connector. **CAUTION: DO NOT PROBE THE PCM HARNESS CONNECTORS. PROBING THE PCM HARNESS CONNECTORS WILL DAMAGE THE PCM TERMINALS RESULTING IN POOR TERMINAL TO PIN CONNECTION. INSTALL MILLER SPECIAL TOOL #8815 TO PERFORM DIAGNOSIS.** Measure the resistance of the (K4) Sensor ground circuit from the ECT Sensor harness connector to the appropriate terminal of special tool #8815. Is the resistance below 5.0 ohms? Yes → Go To 6 No → Repair the open in the (K4) Sensor ground circuit. Perform POWERTRAIN VERIFICATION TEST VER - 5 - NGC.	All
6	**NOTE: Before continuing, check the PCM harness connector terminals for corrosion, damage, or terminal push out. Repair as necessary.** If there are no possible causes remaining, view repair. Repair Replace and program the Powertrain Control Module in accordance with the Service Information. Perform POWERTRAIN VERIFICATION TEST VER - 5 - NGC.	All

Symptom:

P0122-THROTTLE POSITION SENSOR #1 LOW

When Monitored and Set Condition:

P0122-THROTTLE POSITION SENSOR #1 LOW

When Monitored: With the ignition on. Battery voltage greater than 10 volts.

Set Condition: Throttle Position Sensor voltage at the PCM is less than 0.0978 of a volt. One Trip Fault.

POSSIBLE CAUSES
THROTTLE POSITION SENSOR SWEEP
INTERMITTENT CONDITION
(K6) 5 VOLT SUPPLY CIRCUIT SHORTED TO GROUND
(K6) 5 VOLT SUPPLY CIRCUIT OPEN
TP SENSOR INTERNAL FAILURE
(K22) TP SIGNAL CIRCUIT SHORTED TO GROUND
(K22) TP SIGNAL CIRCUIT SHORTED TO (K4) SENSOR GROUND CIRCUIT
PCM (K6) 5 VOLT SUPPLY CIRCUIT
PCM (K22) TP SENSOR SIGNAL

TEST	ACTION	APPLICABILITY
1	Ignition on, engine not running. With the DRBIII®, read the Throttle Position Sensor voltage. Is the voltage below 0.2 of a volt? Yes → Go To 2 No → Go To 10	All
2	Turn the ignition off. Disconnect the TP Sensor harness connector. Ignition on, engine not running. Measure the voltage of the (K6) 5 Volt Supply circuit in the TP Sensor harness connector. Is the voltage between 4.5 to 5.2 volts? Yes → Go To 3 No → Go To 7	All

P0122-THROTTLE POSITION SENSOR #1 LOW — Continued

TEST	ACTION	APPLICABILITY
3	Turn the ignition off. Disconnect the TP Sensor harness connector. With the DRBIII®, monitor the TP Sensor voltage. Ignition on, engine not running. Is the voltage above 4.5 volts? Yes → Replace the Throttle Position Sensor. Perform POWERTRAIN VERIFICATION TEST VER - 5 - NGC. No → Go To 4	All
4	Turn the ignition off. Disconnect the TP harness connector. Disconnect the PCM harness connector. Measure the resistance between ground and the (K22) TP Signal circuit at the TP Sensor harness connector. Is the resistance below 100 ohms? Yes → Repair the short to ground in the (K22) TP Signal circuit. Perform POWERTRAIN VERIFICATION TEST VER - 5 - NGC. No → Go To 5	All
5	Turn the ignition off. Disconnect the TP Sensor harness connector. Disconnect the PCM harness connector. Measure the resistance between the (K22) TPS Signal circuit and the (K4) Sensor ground circuit in the TPS harness connector. Is the resistance below 100 ohms? Yes → Repair the short to (K4) Sensor ground in the (K22) TP Signal circuit. Perform POWERTRAIN VERIFICATION TEST VER - 5 - NGC. No → Go To 6	All
6	**NOTE: Before continuing, check the PCM harness connector terminals for corrosion, damage, or terminal push out. Repair as necessary.** If there are no possible causes remaining, view repair. Repair Replace and program the Powertrain Control Module in accordance with the Service Information. Perform POWERTRAIN VERIFICATION TEST VER - 5 - NGC.	All
7	Turn the ignition off. Disconnect the TP Sensor harness connector. Disconnect the PCM harness connector. Measure the resistance between ground and the (K6) 5 Volt Supply circuit in the TP Sensor harness connector. Is the resistance below 100 ohms? Yes → Repair the short to ground in the (K6) 5 Volt Supply circuit. Perform POWERTRAIN VERIFICATION TEST VER - 5 - NGC. No → Go To 8	All

P0122-THROTTLE POSITION SENSOR #1 LOW — Continued

TEST	ACTION	APPLICABILITY
8	Turn the ignition off. Disconnect the TP Sensor harness connector. Disconnect the PCM harness connector. **CAUTION: DO NOT PROBE THE PCM HARNESS CONNECTORS. PROBING THE PCM HARNESS CONNECTORS WILL DAMAGE THE PCM TERMINALS RESULTING IN POOR TERMINAL TO PIN CONNECTION. INSTALL MILLER SPECIAL TOOL #8815 TO PERFORM DIAGNOSIS.** Measure the resistance of the (K6) 5 Volt Supply circuit from the TP Sensor harness connector to the appropriate terminal of special tool #8815. Is the resistance below 5.0 ohms? Yes → Go To 9 No → Repair the open in the (K6) 5 Volt Supply circuit. Perform POWERTRAIN VERIFICATION TEST VER - 5 - NGC.	All
9	**NOTE: Before continuing, check the PCM harness connector terminals for corrosion, damage, or terminal push out. Repair as necessary.** If there are no possible causes remaining, view repair. Repair Replace and program the Powertrain Control Module in accordance with the Service Information. Perform POWERTRAIN VERIFICATION TEST VER - 5 - NGC.	All
10	Ignition on, engine not running. With the DRBIII®, monitor the Throttle Position Sensor voltage. Slowly open the throttle from the idle position to the wide open throttle position. Does voltage start at approximately 0.7 of a volt and go above 3.5 volts with a smooth transition? Yes → Refer to the INTERMITTENT CONDITION symptom in the Driveability category. Perform POWERTRAIN VERIFICATION TEST VER - 5 - NGC. No → Replace the Throttle Position Sensor. Perform POWERTRAIN VERIFICATION TEST VER - 5 - NGC.	All

Symptom:

P0123-THROTTLE POSITION SENSOR #1 HIGH

When Monitored and Set Condition:

P0123-THROTTLE POSITION SENSOR #1 HIGH

When Monitored: With the ignition on. Battery voltage greater than 10 volts.

Set Condition: Throttle Position Sensor voltage at the PCM is greater than 4.47 volts. One Trip Fault.

POSSIBLE CAUSES
THROTTLE POSITION SENSOR SWEEP
INTERMITTENT CONDITION
(K22) TP SIGNAL CIRCUIT SHORTED TO (K6) 5 VOLT SUPPLY CIRCUIT
(K22) TP SIGNAL CIRCUIT SHORTED TO BATTERY VOLTAGE
TP SENSOR INTERNAL FAILURE
(K22) TP SIGNAL CIRCUIT OPEN
(K4) SENSOR GROUND CIRCUIT OPEN
PCM

TEST	ACTION	APPLICABILITY
1	**NOTE: Ensure the throttle is fully closed and free from binding or carbon build up.** Start the engine. With the DRBIII®, read the TP Sensor voltage. Is the voltage above 4.5 volts? Yes → Go To 2 No → Go To 8	All
2	Turn the ignition off. Disconnect the TP Sensor harness connector. Disconnect the PCM harness connector. Measure the resistance between the (K22) TP Signal circuit and the (K6) 5 Volt Supply circuit in the TP Sensor harness connector. Is the resistance below 100 ohms? Yes → Repair the short to the (K6) 5 Volt Supply circuit in the (K22) TP Signal circuit. Perform POWERTRAIN VERIFICATION TEST VER - 5 - NGC. No → Go To 3	All

P0123-THROTTLE POSITION SENSOR #1 HIGH — Continued

TEST	ACTION	APPLICABILITY
3	Turn the ignition off. Disconnect the TP Sensor harness connector. Ignition on, engine not running. Measure the voltage of the (K22) TP Signal circuit in the TP Sensor harness connector. Is the voltage above 5.2 volts? Yes → Repair the short to battery voltage in the (K22) TP Signal circuit. Perform POWERTRAIN VERIFICATION TEST VER - 5 - NGC. No → Go To 4	All
4	Turn the ignition off. Disconnect the TP Sensor harness connector. Connect a jumper wire between the (K22) TP Signal circuit and the (K4) Sensor ground circuit. With the DRBIII®, monitor the TP Sensor voltage. Ignition on, engine not running. Is the voltage below 0.5 of a volt? Yes → Replace the Throttle Position Sensor. Perform POWERTRAIN VERIFICATION TEST VER - 5 - NGC. No → Go To 5	All
5	Turn the ignition off. Disconnect the TP harness connector. Disconnect the PCM harness connector. **CAUTION: DO NOT PROBE THE PCM HARNESS CONNECTORS. PROBING THE PCM HARNESS CONNECTORS WILL DAMAGE THE PCM TERMINALS RESULTING IN POOR TERMINAL TO PIN CONNECTION. INSTALL MILLER SPECIAL TOOL #8815 TO PERFORM DIAGNOSIS.** Measure the resistance of the (K22) TP Signal circuit from the TP harness connector to the appropriate terminal of special tool #8815. Is the resistance below 5.0 ohms? Yes → Go To 6 No → Repair the open in the (K22) TP Signal circuit. Perform POWERTRAIN VERIFICATION TEST VER - 5 - NGC.	All
6	Turn the ignition off. Disconnect the TP Sensor harness connector. Disconnect the PCM harness connector. **CAUTION: DO NOT PROBE THE PCM HARNESS CONNECTORS. PROBING THE PCM HARNESS CONNECTORS WILL DAMAGE THE PCM TERMINALS RESULTING IN POOR TERMINAL TO PIN CONNECTION. INSTALL MILLER SPECIAL TOOL #8815 TO PERFORM DIAGNOSIS.** Measure the resistance of the (K4) Sensor ground circuit from the TP Sensor harness connector to the appropriate terminal of special tool #8815. Is the resistance below 5.0 ohms? Yes → Go To 7 No → Repair the open in the (K4) Sensor ground circuit. Perform POWERTRAIN VERIFICATION TEST VER - 5 - NGC.	All

P0123-THROTTLE POSITION SENSOR #1 HIGH — Continued

TEST	ACTION	APPLICABILITY
7	**NOTE: Before continuing, check the PCM harness connector terminals for corrosion, damage, or terminal push out. Repair as necessary.** If there are no possible causes remaining, view repair. Repair Replace and program the Powertrain Control Module in accordance with the Service Information. Perform POWERTRAIN VERIFICATION TEST VER - 5 - NGC.	All
8	Ignition on, engine not running. With the DRBIII®, monitor the TP Sensor voltage. Slowly open the throttle from the idle position to the wide open throttle position. Does voltage start at approximately 0.7 of a volt and go above 3.5 volts with a smooth transition? Yes → Refer to the INTERMITTENT CONDITION symptom in the Driveability category. Perform POWERTRAIN VERIFICATION TEST VER - 5 - NGC. No → Replace the Throttle Position Sensor. Perform POWERTRAIN VERIFICATION TEST VER - 5 - NGC.	All

Symptom:

P0125-INSUFFICIENT COOLANT TEMP FOR CLOSED-LOOP FUEL CONTROL

When Monitored and Set Condition:

P0125-INSUFFICIENT COOLANT TEMP FOR CLOSED-LOOP FUEL CONTROL

When Monitored: With battery voltage greater than 10.4 volts, after engine is started.

Set Condition: The engine temperature does not enable closed loop. Failure time depends on start-up coolant temperature and ambient temperature. (i.e. 2 minutes for a start temp of 10°C (50°F) or up to 10 minutes for a vehicle with a start-up temp of -28°C (-18°F). Two Trip Fault.

POSSIBLE CAUSES
LOW COOLANT LEVEL
THERMOSTAT OPERATION
ENGINE COOLANT TEMPERATURE SENSOR

TEST	ACTION	APPLICABILITY
1	**NOTE: If a Engine Coolant Temperature (ECT) DTC is set along with this code, diagnose the ECT DTC first.** **NOTE: Inspect the ECT terminals and related PCM terminals. Ensure the terminals are free from corrosion and damage.** **NOTE: The best way to diagnose this DTC is to allow the vehicle to sit overnight outside in order to have a totally cold soaked engine.** **Note: Extremely cold outside ambient temperatures may have caused this DTC to set.** **WARNING: Never open the cooling system when the engine is hot. The system is under pressure. Extreme burns or scalding may result. Allow the engine to cool before opening the cooling system.** Check the coolant system to make sure that the coolant is in good condition and at the proper level. Is the coolant level and condition OK? Yes → Go To 2 No → Inspect the vehicle for a coolant leak and add the necessary amount of coolant. Perform POWERTRAIN VERIFICATION TEST VER - 5 - NGC.	All

P0125-INSUFFICIENT COOLANT TEMP FOR CLOSED-LOOP FUEL CONTROL — Continued

TEST	ACTION	APPLICABILITY
2	**NOTE: This test works best if performed on a cold engine (cold soak).** Ignition on, engine not running. With the DRBIII®, read the ECT Deg value. If the engine was allowed to sit overnight (cold soak), the temperature value should be a sensible value that is somewhere close to the ambient temperature. **Note: If engine coolant temperature is above 82°C (180°F), allow the engine to cool until 65°C (150°F) is reached.** Start the Engine. During engine warm-up, monitor the ECT Deg value. The temp deg value change should be a smooth transition from start up to normal operating temp 82°C (180°F) . Also monitor the actual coolant temperature with a thermometer. **NOTE: As the engine warms up to operating temperature, the actual coolant temperature (thermometer reading) and the ECT Deg in the DRB sensor should stay relatively close to each other.** Using the appropriate service information, determine the proper opening temperature of the thermostat. Did the thermostat open at the proper temperature? Yes → Go To 3 No → Replace the thermostat. Perform POWERTRAIN VERIFICATION TEST VER - 5 - NGC.	All
3	Ignition on, engine not running. With the DRBIII®, read the ECT Sensor temperature value. If the engine was allowed to sit overnight (cold soak), the temperature value should be a sensible value that is somewhere close to the ambient temperature. **Note: If engine coolant temperature is above 82°C (180°F), allow the engine to cool until 65°C (150°F) is reached.** Start the Engine. During engine warm-up, monitor the ECT Deg value. The temp deg value change should be a smooth transition from start up to normal operating temp 82°C (180°F) . Also monitor the actual coolant temperature with a thermometer. **NOTE: As the engine warms up to operating temperature, the actual coolant temperature (thermometer reading) and the ECT Sensor Temperature in the DRBIII® sensors should stay relatively close to each other.** Is the thermometer reading relatively close to the DRBIII® ECT Sensor reading? Yes → Test Complete. No → Replace the Engine Coolant Temperature Sensor. Perform POWERTRAIN VERIFICATION TEST VER - 5 - NGC.	All

Symptom:

P0128-THERMOSTAT RATIONALITY

When Monitored and Set Condition:

P0128-THERMOSTAT RATIONALITY

When Monitored: The engine running. During cold start.

Set Condition: The PCM predicts a coolant temperature value that it will compare to the actual coolant temperature. If the two coolant temperature values are not within 10°C (50°F) of each other an error is detected. Two Trip Fault.

POSSIBLE CAUSES
GOOD TRIP EQUAL TO ZERO
LOW COOLANT LEVEL
OTHER POSSIBLE CAUSES
SIGNAL CIRCUIT SHORTED TO BATTERY VOLTAGE
MONITOR ENGINE COOLANT TEMPERATURE
TEMPERATURE SENSOR VOLTAGE BELOW 1.0 VOLT
SIGNAL CIRCUIT OPEN
SENSOR GROUND CIRCUIT OPEN
SIGNAL CIRCUIT SHORTED TO GROUND
SIGNAL CIRCUIT SHORTED TO SENSOR GROUND
PCM LOW
PCM HIGH

TEST	ACTION	APPLICABILITY
1	**NOTE: If any ECT, AAT, CMP or CKP sensor DTCs have set along with P0128, diagnose them first before continuing.** **NOTE: Ensure that Pinion Factor has been programmed correctly into the PCM.** Ignition on, engine not running. With the DRBIII®, read DTCs and record the related Freeze Frame data. Is the Good Trip displayed and equal to zero? Yes → Go To 2 No → Refer to the INTERMITTENT CONDITION symptom in the Driveability category. Perform POWERTRAIN VERIFICATION TEST VER - 5 - NGC.	All

P0128-THERMOSTAT RATIONALITY — Continued

TEST	ACTION	APPLICABILITY
2	**NOTE: If a Engine Coolant Temperature (ECT) DTC is set along with this code, diagnose the ECT DTC first.** **NOTE: Inspect the ECT terminals and related PCM terminals. Ensure the terminals are free from corrosion and damage.** **NOTE: The best way to diagnose this DTC is to allow the vehicle to sit overnight outside in order to have a totally cold soaked engine.** **Note: Extremely cold outside ambient temperatures may have caused this DTC to set.** **WARNING: Never open the cooling system when the engine is hot. The system is under pressure. Extreme burns or scalding may result. Allow the engine to cool before opening the cooling system.** Check the coolant system to make sure that the coolant is in good condition and at the proper level. Is the coolant level and condition OK? Yes → Go To 3 No → Inspect the vehicle for a coolant leak and add the necessary amount of coolant. Perform POWERTRAIN VERIFICATION TEST VER - 5 - NGC.	All
3	Using the appropriate service information, determine the proper opening temperature of the thermostat. **NOTE: It is important that the thermostat meets all OEM specifications. An incorrect thermostat or an improperly installed thermostat will cause this DTC to set.** **NOTE: This test works best if performed on a cold engine (cold soak).** Ignition on, engine not running. With the DRBIII®, monitor the Engine Coolant temperature. If the engine was allowed to sit overnight (cold soak), the temperature value should be a sensible value that is somewhere close to the ambient temperature. **NOTE: If engine coolant temperature is above 82°C (180°F), allow the engine to cool until 65°C (150°F) is reached.** Start the Engine. During engine warm-up, monitor the ECT Deg value on the DRBIII®. The temperature change should be a smooth transition from start up to normal operating temp 82°C (180°F) . Also monitor the actual coolant temperature with a thermometer. **NOTE: As the engine warms up to operating temperature, the actual coolant temperature (thermometer reading) and the ECT Deg on the DRBIII® should stay within 10° (18°F) of each other.** If the thermostat does not open at the proper temperature, replace the thermostat. If the monitored Engine Coolant Temperature transition from cold to hot was not smooth or if the temperature value on the DRBIII® was not within 10°C (18°F) of the thermometer reading during warm-up, replace the ECT Sensor. Were any problems found? Yes → Repair as necessary. Perform POWERTRAIN VERIFICATION TEST VER - 5 - NGC. No → Go To 4	All
4	Turn the ignition on. With the DRBIII®, read and record the AAT Sensor Temperature value Using the DRB Temperature Probe #CH7050, measure the ambient air temperature near the AAT sensor. Is the AAT Sensor value with -15°C (5°F) of the temperature probe reading? Yes → Go To 5 No → Go To 7	All

P0128-THERMOSTAT RATIONALITY — Continued

TEST	ACTION	APPLICABILITY
5	**WARNING: MAKE SURE THE ENGINE COOLING SYSTEM IS COOL BEFORE REMOVING THE PRESSURE CAP OR ANY HOSE. SEVERE PERSONAL INJURY MAY RESULT FROM ESCAPING HOT COOLANT. THE COOLING SYSTEM IS PRESSURIZED WHEN HOT.** Turn the ignition on. With the DRBIII®, read and record the ECT Sensor Temperature value Using the DRB Temperature Probe #CH7050, measure the engine coolant temperature. Is the ECT Sensor value with -15°C (5°F) of the temperature probe reading? Yes → Go To 6 No → Go To 7	All
6	Inspect the Temperature sensors for any physical damage. Inspect the engine coolant. Ensure the coolant is at the proper level. Refer to the Service Information COOLING. Ensure the Temperature sensors are properly mounted. Ensure the CMP and CKP sensors are mounted properly. Check the connectors for any signs of damage. **WARNING: WHEN THE ENGINE IS OPERATING, DO NOT STAND IN A DIRECT LINE WITH THE FAN. DO NOT PUT YOUR HANDS NEAR THE PULLEYS, BELTS OR FAN. DO NOT WEAR LOOSE CLOTHING.** Refer to any Technical Service Bulletins (TSBs) that may apply. With the engine running at normal operating temperature, monitor the Temperature sensor parameters while wiggling the wire harness. Look for parameter values to change. Visually inspect the related wire harness. Look for any chafed, pierced, pinched, partially broken wires and broken, bent, pushed out, or corroded terminals. **CAUTION: NEVER PROBE THE PCM HARNESS CONNECTORS. PROBING THE PCM HARNESS CONNECTORS WILL DAMAGE THE PCM TERMINALS RESULTING IN POOR TERMINAL TO PIN CONNECTION. INSTALL MILLER SPECIAL TOOL #8815 TO PERFORM DIAGNOSIS.** Inspect and clean all PCM, engine, and chassis grounds. Were any problems found during the above inspections? Yes → Repair as necessary Perform POWERTRAIN VERIFICATION TEST VER - 5 - NGC. No → Test Complete.	All
7	**NOTE: Visually inspect both the component and the PCM connectors. Look for damage, partially broken wires and backed out or corroded terminals** Turn the ignition off. Disconnect the applicable Temperature Sensor harness connector. Ignition on, engine not running. Measure the voltage of the Signal circuit in the applicable Temperature Sensor harness connector. Is the voltage above 5.2 volts? Yes → Repair the short to battery voltage in the Signal circuit. Perform POWERTRAIN VERIFICATION TEST VER - 5 - NGC. No → Go To 8	All

P0128-THERMOSTAT RATIONALITY — Continued

TEST	ACTION	APPLICABILITY
8	Turn the ignition off. Disconnect the applicable Temperature Sensor harness connector. Ignition on, engine not running. With the DRBIII®, read the Temperature Sensor voltage. Is the voltage above 4.6 volts? Yes → Go To 9 No → Go To 12	All
9	Turn the ignition off. Disconnect the applicable Temperature Sensor harness connector. Using a jumper wire, jumper across the Temperature Sensor harness connector. Ignition on, engine not running. With the DRBIII®, read the Temperature voltage. Is the voltage below 1.0 volt? Yes → Replace the applicable Temperature Sensor. Perform POWERTRAIN VERIFICATION TEST VER - 5 - NGC. No → Go To 10	All
10	Turn the ignition off. Disconnect the applicable Temperature Sensor harness connector. Disconnect the PCM harness connector. **CAUTION: DO NOT PROBE THE PCM HARNESS CONNECTORS. PROBING THE PCM HARNESS CONNECTORS WILL DAMAGE THE PCM TERMINALS RESULTING IN POOR TERMINAL TO PIN CONNECTION. INSTALL MILLER SPECIAL TOOL #8815 TO PERFORM DIAGNOSIS.** Measure the resistance of the Signal circuit from the Temperature Sensor harness connector to the appropriate terminal of special tool #8815. Is the resistance below 5.0 ohms? Yes → Go To 11 No → Repair the open in the Signal circuit. Perform POWERTRAIN VERIFICATION TEST VER - 5 - NGC.	All
11	Turn the ignition off. Disconnect the applicable Temperature Sensor harness connector. Disconnect the PCM harness connector. **CAUTION: DO NOT PROBE THE PCM HARNESS CONNECTORS. PROBING THE PCM HARNESS CONNECTORS WILL DAMAGE THE PCM TERMINALS RESULTING IN POOR TERMINAL TO PIN CONNECTION. INSTALL MILLER SPECIAL TOOL #8815 TO PERFORM DIAGNOSIS.** Measure the resistance of the Sensor ground circuit from the Ambient Air Temperature Sensor harness connector to the appropriate terminal of special tool #8815. Is the resistance below 5.0 ohms? Yes → NOTE: Before continuing, check the PCM harness connector terminals for corrosion, damage, or terminal push out. Repair as necessary. Replace and program the Powertrain Contorl Module in accordance with the Service Information. Perform POWERTRAIN VERIFICATION TEST VER - 5 - NGC. No → Repair the open in the Sensor ground circuit. Perform POWERTRAIN VERIFICATION TEST VER - 5 - NGC.	All

P0128-THERMOSTAT RATIONALITY — Continued

TEST	ACTION	APPLICABILITY
12	Turn the ignition off. Disconnect the applicable Temperature Sensor harness connector. Disconnect the PCM harness connector. Measure the resistance between ground and the Signal circuit in the Temperature harness connector. Is the resistance below 100 ohms? Yes → Repair the short to ground in the Signal circuit. Perform POWERTRAIN VERIFICATION TEST VER - 5 - NGC. No → Go To 13	All
13	Turn the ignition off. Disconnect the applicable Temperature Sensor harness connector. Disconnect the PCM harness connector. Measure the resistance between the Signal circuit and the Sensor ground circuit in the Temperature Sensor harness connector. Is the resistance below 100 ohms? Yes → Repair the Sensor ground shorted to the Signal circuit. Perform POWERTRAIN VERIFICATION TEST VER - 5 - NGC. No → NOTE: Before continuing, check the PCM harness connector terminals for corrosion, damage or terminal push out. Repair as necessary. Replace and program the Powertrain Control Module in accordance with the Service Information. Perform POWERTRAIN VERIFICATION TEST VER - 5 - NGC.	All

Symptom:

P0129-BAROMETRIC PRESSURE OUT-OF-RANGE LOW

When Monitored and Set Condition:

P0129-BAROMETRIC PRESSURE OUT-OF-RANGE LOW

When Monitored: With the ignition key on. No Cam or Crank signal within 75 ms. Engine speed at less than 250 RPM.

Set Condition: The PCM senses the voltage from the MAP sensor to be less than 2.196 volts but above 0.0392 of a volt for 300 milliseconds.One Trip Fault.

POSSIBLE CAUSES
IAC SIGNAL CIRCUIT LOW
IAC SIGNAL CIRCUIT HIGH
INTERMITTENT CONDITION
(K6) 5 VOLT SUPPLY CIRCUIT SHORTED TO VOLTAGE
(K6) 5 VOLT SUPPLY CIRCUIT SHORTED TO GROUND
(K6) 5 VOLT SUPPLY CIRCUIT OPEN
MAP SENSOR INTERNAL FAILURE
(K1) MAP SIGNAL CIRCUIT OPEN
(K1) MAP SIGNAL CIRCUIT SHORTED TO GROUND
PCM (K6) 5 VOLT SUPPLY CIRCUIT
PCM (K1) MAP SIG CIRCUIT

TEST	ACTION	APPLICABILITY
1	**NOTE: Refer to any TSBs that may apply to this DTC before proceeding.** Ignition on, engine not running. With the DRBIII®, read the MAP Sensor voltage. Is the voltage below 2.2 volts. Yes → Go To 2 No → Go To 11	All
2	Turn the ignition off. Disconnect the MAP Sensor harness connector. Ignition on, engine not running. Measure the voltage of the (K6) 5 Volt Supply circuit in the MAP Sensor harness connector. Is the voltage between 4.5 to 5.2 volts? Yes → Go To 3 No → Go To 7	All

P0129-BAROMETRIC PRESSURE OUT-OF-RANGE LOW — Continued

TEST	ACTION	APPLICABILITY
3	Turn the ignition off. Disconnect the MAP Sensor harness connector. Ignition on, engine not running. With the DRBIII®, monitor the MAP Sensor voltage. Is the voltage above 2.2 volts? Yes → Replace the MAP Sensor. Perform POWERTRAIN VERIFICATION TEST VER - 5 - NGC. No → Go To 4	All
4	Turn the ignition off. Disconnect the MAP Sensor harness connector. Disconnect the PCM harness connector. **CAUTION: DO NOT PROBE THE PCM HARNESS CONNECTORS. PROBING THE PCM HARNESS CONNECTORS WILL DAMAGE THE PCM TERMINALS RESULTING IN POOR TERMINAL TO PIN CONNECTION. INSTALL MILLER SPECIAL TOOL #8815 TO PERFORM DIAGNOSIS.** Measure the resistance of the (K1) MAP Signal circuit from the MAP Sensor harness connector to the appropriate terminal of special tool #8815. Is the resistance below 5.0 ohms? Yes → Go To 5 No → Repair the open in the (K1) MAP Signal circuit. Perform POWERTRAIN VERIFICATION TEST VER - 5 - NGC.	All
5	Turn the ignition off. Disconnect the MAP Sensor harness connector. Disconnect the PCM harness connector. Measure the resistance between ground and the (K1) MAP Signal circuit at the MAP Sensor harness connector. Is the resistance below 100 ohms? Yes → Repair the short to ground in the (K1) MAP Signal circuit. Perform POWERTRAIN VERIFICATION TEST VER - 5 - NGC. No → Go To 6	All
6	**NOTE: Before continuing, check the PCM harness connector terminals for corrosion, damage, or terminal push out. Repair as necessary.** If there are no possible causes remaining, view repair. Repair Replace and program the Powertrain Control Module in accordance with the Service Information. Perform POWERTRAIN VERIFICATION TEST VER - 5 - NGC.	All
7	Turn the ignition off. Disconnect the MAP Sensor harness connector. Ignition on, engine not running. Measure the voltage of the (K6) 5 Volt Supply circuit in the MAP Sensor harness connector. Is the voltage above 5.2 volts? Yes → Repair the short to battery voltage in the (K6) 5 Volt Supply circuit. Perform POWERTRAIN VERIFICATION TEST VER - 5 - NGC. No → Go To 8	All

P0129-BAROMETRIC PRESSURE OUT-OF-RANGE LOW — Continued

TEST	ACTION	APPLICABILITY
8	Turn the ignition off. Disconnect the MAP Sensor harness connector. Disconnect the PCM harness connector. Measure the resistance between ground and the (K6) 5 Volt Supply circuit at the MAP Sensor harness connector. Is the resistance below 100 ohms? Yes → Repair the short to ground in the (K6) 5 Volt Supply circuit. Perform POWERTRAIN VERIFICATION TEST VER - 5 - NGC. No → Go To 9	All
9	Turn the ignition off. Disconnect the MAP Sensor harness connector. Disconnect the PCM harness connector. **CAUTION: DO NOT PROBE THE PCM HARNESS CONNECTORS. PROBING THE PCM HARNESS CONNECTORS WILL DAMAGE THE PCM TERMINALS RESULTING IN POOR TERMINAL TO PIN CONNECTION. INSTALL MILLER SPECIAL TOOL #8815 TO PERFORM DIAGNOSIS.** Measure the resistance of the 5 Volt Supply circuit from the MAP Sensor harness connector to the appropriate terminal of special tool #8815. Is the resistance below 5.0 ohms? Yes → Go To 10 No → Repair the open in the (K6) 5 Volt Supply circuit. Perform POWERTRAIN VERIFICATION TEST VER - 5 - NGC.	All
10	**NOTE: Before continuing, check the PCM harness connector terminals for corrosion, damage, or terminal push out. Repair as necessary.** If there are no possible causes remaining, view repair. Repair Replace and program the Powertrain Control Module in accordance with the Service Information. Perform POWERTRAIN VERIFICATION TEST VER - 5 - NGC.	All
11	Start the engine. **NOTE: If the engine will not idle, maintain an engine speed between 800 and 1500 RPM.** Allow the engine to idle. With the DRBIII®, read the IAC Current. Is the IAC Current below 146 mA? Yes → Refer to P0508 - IAC Valve Sense Low Perform POWERTRAIN VERIFICATION TEST VER - 5 - NGC. No → Go To 12	All
12	Start the engine. **NOTE: If the engine will not idle, maintain an engine speed between 800 and 1500 RPM.** Allow the engine to idle. With the DRBIII®, read the IAC Current. Is the IAC Current above 999 mA? Yes → Refer to P0509 - IAC Valve Sense Circuit High Perform POWERTRAIN VERIFICATION TEST VER - 5 - NGC. No → Refer to the INTERMITTENT CONDITION symptom in the Driveability category. Perform POWERTRAIN VERIFICATION TEST VER - 5 - NGC.	All

Symptom List:

P0131-O2 SENSOR 1/1 VOLTAGE LOW
P0137-O2 SENSOR 1/2 VOLTAGE LOW

Test Note: All symptoms listed above are diagnosed using the same tests. The title for the tests will be P0131-O2 SENSOR 1/1 VOLTAGE LOW.

When Monitored and Set Condition:

P0131-O2 SENSOR 1/1 VOLTAGE LOW

When Monitored: Engine Running.

Set Condition: The oxygen sensor signal voltage is below 2.402 volts for 9 seconds. Two trip Fault.

P0137-O2 SENSOR 1/2 VOLTAGE LOW

When Monitored: Engine Running.

Set Condition: The oxygen sensor signal voltage is below 2.402 volts for 9 seconds. Two trip Fault.

POSSIBLE CAUSES
O2 SENSOR BELOW 2.52 VOLTS
O2 SENSOR
O2 RETURN CIRCUIT SHORTED TO GROUND
O2 SIGNAL CIRCUIT SHORTED TO GROUND
O2 SIGNAL CIRCUIT SHORTED TO O2 RETURN CIRCUIT
O2 SIGNAL SHORTED TO HEATER GROUND CIRCUIT
PCM RETURN CIRCUIT
PCM SIGNAL CIRCUIT

P0131-O2 SENSOR 1/1 VOLTAGE LOW — Continued

TEST	ACTION	APPLICABILITY
1	**NOTE: If one of the O2 Sensors Signal or Return circuits are shorted to ground, the DRBIII® will display all O2 Sensor voltage readings low. The O2 Sensor that is shorted to ground will display a voltage reading near or at 0 volts.** **NOTE: It is important to perform the diagnostics on the O2 Sensor that set the DTC.** **NOTE: After the repairs have been made, verify proper O2 Sensor operation. If all the O2 Sensor voltage readings have not returned to normal, follow the diagnostic procedure for the remaining O2 Sensors.** Start the engine. Allow the engine to reach normal operating temperature. With the DRBIII®, read the O2 Sensor voltage. Is the voltage below 2.52 volts? Yes → Go To 2 No → Refer to the INTERMITTENT CONDITION symptom in the Driveability category. Perform POWERTRAIN VERIFICATION TEST VER - 5 - NGC.	All
2	Turn the ignition off. Disconnect the O2 Sensor harness connector. Ignition on, engine not running. With the DRBIII®, monitor the O2 Sensor voltage. Is the O2 Sensor voltage above 4.8 volts? Yes → Go To 3 No → Go To 5	All
3	Turn the ignition off. Disconnect the O2 Sensor harness connector. Ignition on, engine not running. Measure the voltage on the O2 Return circuit in the O2 Sensor harness connector. Is the voltage at 2.5 volts? Yes → Replace the O2 Sensor. Perform POWERTRAIN VERIFICATION TEST VER - 5 - NGC. No → Go To 4	All
4	Turn the ignition off. Disconnect the O2 Sensor harness connector. Disconnect the PCM harness connector. Measure the resistance between ground and the O2 Return circuit in the O2 Sensor harness connector. Is the resistance below 100 ohms? Yes → Repair the short to ground in the O2 Return circuit. Perform POWERTRAIN VERIFICATION TEST VER - 5 - NGC. No → NOTE: Before continuing, check the PCM harness connector terminals for corrosion, damage, or terminal push out. Repair as necessary. Replace and program the Powertrain Control Module in accordance with the Service Information. Perform POWERTRAIN VERIFICATION TEST VER - 5 - NGC.	All

P0131-O2 SENSOR 1/1 VOLTAGE LOW — Continued

TEST	ACTION	APPLICABILITY
5	Turn the ignition off. Disconnect the O2 Sensor harness connector. Disconnect the PCM harness connector. Measure the resistance between ground and the O2 Signal circuit in the O2 Sensor harness connector. Is the resistance below 100 ohms? Yes → Repair the short to ground in the O2 Signal circuit. Perform POWERTRAIN VERIFICATION TEST VER - 5 - NGC. No → Go To 6	All
6	Turn the ignition off. Disconnect the O2 Sensor harness connector. Disconnect the PCM harness connector. Measure the resistance between the O2 Signal circuit and the O2 Return circuit in the O2 Sensor harness connector. Is the resistance below 100 ohms? Yes → Repair the O2 Return circuit shorted to the O2 Signal circuit. Perform POWERTRAIN VERIFICATION TEST VER - 5 - NGC. No → Go To 7	All
7	Turn the ignition off. Disconnect the O2 Sensor harness connector. Disconnect the PCM harness connector. Measure the resistance between the O2 Signal circuit and the Heater ground circuit in the O2 Sensor harness connector. Is the resistance below 100 ohms? Yes → Repair the Heater Ground circuit shorted to the O2 Signal circuit. Perform POWERTRAIN VERIFICATION TEST VER - 5 - NGC. No → Go To 8	All
8	**NOTE: Before continuing, check the PCM harness connector terminals for corrosion, damage, or terminal push out. Repair as necessary.** If there are no possible causes remaining, view repair. Repair Replace and program the Powertrain Control Module in accordance with the Service Information. Perform POWERTRAIN VERIFICATION TEST VER - 5 - NGC.	All

Symptom List:

P0132-O2 SENSOR 1/1 VOLTAGE HIGH
P0138-O2 SENSOR 1/2 VOLTAGE HIGH

Test Note: All symptoms listed above are diagnosed using the same tests. The title for the tests will be P0132-O2 SENSOR 1/1 VOLTAGE HIGH.

When Monitored and Set Condition:

P0132-O2 SENSOR 1/1 VOLTAGE HIGH

When Monitored: The engine running for 119 seconds. O2 Sensor Heater Temperature is greater than 350°C (662°F). Battery voltage greater than 10.99 volts.

Set Condition: The Oxygen Sensor voltage is above 3.9902 volts for 30 seconds. Two trip fault.

P0138-O2 SENSOR 1/2 VOLTAGE HIGH

When Monitored: The engine running for 119 seconds. O2 Sensor Heater Temperature is greater than 350°C (662°F). Battery voltage greater than 10.99 volts.

Set Condition: The Oxygen Sensor voltage is above 3.9902 volts for 30 seconds. Two trip fault.

POSSIBLE CAUSES
O2 SENSOR VOLTAGE ABOVE 3.7 VOLTS
O2 SENSOR SIGNAL CIRCUIT SHORTED TO VOLTAGE
O2 SENSOR RETURN CIRCUIT SHORTED TO VOLTAGE
O2 SENSOR
O2 SENSOR SIGNAL CIRCUIT OPEN
O2 SENSOR RETURN CIRCUIT OPEN
PCM

P0132-O2 SENSOR 1/1 VOLTAGE HIGH — Continued

TEST	ACTION	APPLICABILITY
1	**NOTE: If one of the O2 Sensors Signal or Return circuits are shorted to voltage, the DRBIII® will display all O2 Sensor voltage readings high.** **NOTE: It is important to perform the diagnostics on the O2 Sensor that set the DTC.** **NOTE: After the repairs have been made, verify proper O2 Sensor operation. If all the O2 Sensor voltage readings have not returned to normal, follow the diagnostic procedure for the remaining O2 Sensors.** Start the engine. Allow the engine to reach normal operating temperature. With the DRBIII®, read the O2 Sensor voltage. Is the voltage above 3.7 volts? Yes → Go To 2 No → Refer to the INTERMITTENT CONDITION symptom in the Driveability category. Perform POWERTRAIN VERIFICATION TEST VER - 5 - NGC.	All
2	Turn the ignition off. Disconnect the O2 Sensor harness connector **WARNING: WHEN THE ENGINE IS OPERATING, DO NOT STAND IN A DIRECT LINE WITH THE FAN. DO NOT PUT YOUR HANDS NEAR THE PULLEYS, BELTS OR FAN. DO NOT WEAR LOOSE CLOTHING.** Start the engine and allow the engine to idle. Measure the voltage on the O2 Sensor Signal circuit in the O2 Sensor harness connector. **NOTE: Measure the voltage in reference to ground, not the O2 Sensor Return circuit.** Is the voltage above 5.2 volts? Yes → Repair the short to voltage in the O2 Sensor Signal circuit. Perform POWERTRAIN VERIFICATION TEST VER - 5 - NGC. No → Go To 3	All
3	Turn the ignition off. Disconnect the O2 Sensor harness connector Disconnect the PCM harness connectors. Turn the ignition on. Measure the voltage on the O2 Sensor Return circuit in the O2 Sensor harness connector. Is there any voltage present? Yes → Repair the short to voltage in the O2 Sensor Return circuit. Perform POWERTRAIN VERIFICATION TEST VER - 5 - NGC. No → Go To 4	All
4	Turn the ignition off. Disconnect the O2 Sensor harness connector. Connect a jumper wire between the O2 Sensor Signal circuit and the O2 Sensor Return circuit in the O2 Sensor harness connector. Ignition on, engine not running. With the DRBIII®, monitor the O2 Sensor voltage. Is the voltage between 2.3 and 2.7 volts with the jumper wire in place? Yes → Replace the O2 Sensor. Perform POWERTRAIN VERIFICATION TEST VER - 5 - NGC. No → Go To 5	All

P0132-O2 SENSOR 1/1 VOLTAGE HIGH — Continued

TEST	ACTION	APPLICABILITY
5	Turn the ignition off. Disconnect the O2 Sensor harness connector Disconnect the PCM harness connector. **CAUTION: DO NOT PROBE THE PCM HARNESS CONNECTORS. PROBING THE PCM HARNESS CONNECTORS WILL DAMAGE THE PCM TERMINALS RESULTING IN POOR TERMINAL TO PIN CONNECTION. INSTALL MILLER SPECIAL TOOL #8815 TO PERFORM DIAGNOSIS.** Measure the resistance of the O2 Sensor Signal circuit from the O2 Sensor harness connector to the appropriate terminal of special tool #8815. Is the resistance below 5.0 ohms? Yes → Go To 6 No → Repair the open O2 Sensor Signal circuit. Perform POWERTRAIN VERIFICATION TEST VER - 5 - NGC.	All
6	Turn the ignition off. Disconnect the O2 Sensor harness connector Disconnect the PCM harness connector. **CAUTION: DO NOT PROBE THE PCM HARNESS CONNECTORS. PROBING THE PCM HARNESS CONNECTORS WILL DAMAGE THE PCM TERMINALS RESULTING IN POOR TERMINAL TO PIN CONNECTION. INSTALL MILLER SPECIAL TOOL #8815 TO PERFORM DIAGNOSIS.** Measure the resistance of the O2 Sensor Return circuit from the O2 Sensor harness connector to the appropriate terminal of special tool #8815. Is the resistance below 5.0 ohms? Yes → NOTE: Before continuing, check the PCM harness connector terminals for corrosion, damage, or terminal push out. Repair as necessary. Replace and program the Powertrain Control Module in accorance with the Service Information. Perform POWERTRAIN VERIFICATION TEST VER - 5 - NGC. No → Repair the open O2 Sensor Return circuit. Perform POWERTRAIN VERIFICATION TEST VER - 5 - NGC.	All

Symptom List:

P0133-O2 SENSOR 1/1 SLOW RESPONSE
P0139-O2 SENSOR 1/2 SLOW RESPONSE

Test Note: All symptoms listed above are diagnosed using the same tests. The title for the tests will be P0133-O2 SENSOR 1/1 SLOW RESPONSE.

When Monitored and Set Condition:

P0133-O2 SENSOR 1/1 SLOW RESPONSE

When Monitored: Start and drive vehicle greater than 20 MPH and less than 55 MPH. Throttle open for a minimum 120 seconds. Coolant Temp greater than 70°C (158°F) Catalytic Converter Temperature greater than 600°C (1112°F)

Set Condition: The PCM monitors the state of change of the front O2 sensor and the rear 02 sensor. The PCM will then compare the differences between both readings, if the differences are greater than a calibrated amount the PCM will record a fault. Two trip failure.

P0139-O2 SENSOR 1/2 SLOW RESPONSE

When Monitored: Start and drive vehicle greater than 20 MPH and less than 55 MPH. Throttle open for a minimum 120 seconds. Coolant Temp greater than 70°C (158°F) Catalytic Converter Temperature greater than 600°C (1112°F)

Set Condition: The PCM monitors the state of change of the front O2 sensor and the rear 02 sensor. The PCM will then compare the differences between both readings, if the differences are greater than a calibrated amount the PCM will record a fault. Two trip failure.

POSSIBLE CAUSES
GOOD TRIP EQUAL TO ZERO
EXHAUST LEAK
O2 SIGNAL CIRCUIT
O2 RETURN CIRCUIT
O2 SENSOR

P0133-O2 SENSOR 1/1 SLOW RESPONSE — Continued

TEST	ACTION	APPLICABILITY
1	**NOTE: If one of the O2 Sensors Signal or Return circuits are shorted to ground or voltage, all the other O2 Sensor voltage readings will be affected.** **NOTE: It is important to perform the diagnostics on the O2 Sensor that set the DTC.** **NOTE: After the repairs have been made, verify proper O2 Sensor operation. If all the O2 Sensor voltage readings have not returned to normal, follow the diagnostic procedure for the remaining O2 Sensors.** **NOTE: Check for contaminants that may have damaged the O2 Sensor: contaminated fuel, unapproved silicone, oil and coolant.** Ignition on, engine not running. With the DRBIII®, read DTCs and record the related Freeze Frame data. Is the Good Trip Counter displayed and equal to zero? Yes → Go To 2 No → Refer to the INTERMITTENT CONDITION symptom in the Driveability category. Perform POWERTRAIN VERIFICATION TEST VER - 5 - NGC.	All
2	Start the engine. Inspect the exhaust system for leaks between the engine and the O2 Sensors. Are there any exhaust leaks? Yes → Repair or replace the leaking exhaust parts as necessary. Perform POWERTRAIN VERIFICATION TEST VER - 5 - NGC. No → Go To 3	All
3	Turn the ignition off Disconnect the O2 Sensor harness connector. Ignition on, engine not running. Measure the voltage on the O2 Signal circuit in the O2 Sensor harness connector. Is the voltage between 4.5 and 5.0 volts? Yes → Go To 4 No → Check the O2 Signal circuit for damage, short to ground, open, or short to voltage. If OK, replace and program the Powertrain Control Module in accordance with the Service Information. Perform POWERTRAIN VERIFICATION TEST VER - 5 - NGC.	All
4	Turn the ignition off. Disconnect the O2 Sensor harness connector. Ignition on, engine not running. Measure the voltage on the O2 Return circuit in the O2 Sensor harness connector. Is the voltage at 2.5 volts? Yes → Check the O2 Return circuit for damage, short to ground, open, or short to voltage. If OK, replace and program the Powertrain Control Module in accordance with the Service Information. Perform POWERTRAIN VERIFICATION TEST VER - 5 - NGC. No → Go To 5	All
5	If there are no possible causes remaining, view repair. Repair Replace the O2 Sensor Perform POWERTRAIN VERIFICATION TEST VER - 5 - NGC.	All

Symptom List:

P0135-O2 SENSOR 1/1 HEATER PERFORMANCE
P0141-O2 SENSOR 1/2 HEATER PERFROMANCE

Test Note: All symptoms listed above are diagnosed using the same tests. The title for the tests will be P0135-O2 SENSOR 1/1 HEATER PERFORMANCE.

When Monitored and Set Condition:

P0135-O2 SENSOR 1/1 HEATER PERFORMANCE

When Monitored: Engine Running and Heater duty cycle greater than 0%

Set Condition: O2 Heater Temperature does not reach 575°C (959°F) within 45 second during monitoring conditions. Two Trip Fault.

P0141-O2 SENSOR 1/2 HEATER PERFROMANCE

When Monitored: Engine Running and Heater duty cycle greater than 0%.

Set Condition: O2 Heater Temperature does not reach 575°C (959°F) within 45 second during monitoring conditions. Two Trip Fault.

POSSIBLE CAUSES
O2 SENSOR HEATER OPERATION
O2 HEATER ELEMENT
O2 HEATER GROUND CIRCUIT OPEN
O2 HEATER CONTROL CIRCUIT OPEN
PCM

TEST	ACTION	APPLICABILITY
1	Ignition on, engine not running. With the DRBIII®, read DTCs and record the related Freeze Frame data. Is the Good Trip Counter display and equal to zero? Yes → Go To 3 No → Go To 2	All

P0135-O2 SENSOR 1/1 HEATER PERFORMANCE — Continued

TEST	ACTION	APPLICABILITY
2	Turn the ignition off. **NOTE: Allow the O2 Sensor to cool down before continuing the test. The O2 voltage should stabilize at 5.0 volts. Raising the hood may help in reducing under hood temps.** Ignition on, engine not running. With the DRBIII®, actuate the O2 Heater Test. With the DRBIII®, monitor O2 Sensor voltage for at least 2 minutes. Does the voltage stay above 4.5 volts? Yes → Go To 3 No → Refer to the INTERMITTENT CONDITION symptom in the Driveability category. Perform POWERTRAIN VERIFICATION TEST VER - 5 - NGC.	All
3	**NOTE: Allow the O2 sensor to cool down to room temperature.** Turn the ignition off. Disconnect the O2 Sensor harness connector. Measure the resistance across the O2 Sensor Heater element component side. **NOTE: O2 Sensor Heater Resistance Specification: 1/1 and 2/1 = 3.0 to 4.0 (NTK) or 2.0 to 3.0 (DENSO) ohms or 1/2 and 2/2 = 3.0 to 4.0 (NTK) ohms.** Is the resistance within the specifications? Yes → Go To 4 No → Replace the O2 Sensor. Perform POWERTRAIN VERIFICATION TEST VER - 5 - NGC.	All
4	Turn the ignition off. Disconnect the O2 Sensor harness connector. Measure the resistance between an engine ground and the O2 Heater Ground circuit in the O2 Sensor harness connector. Is the resistance below 0.5 of an ohm? Yes → Go To 5 No → Repair the open/high resistance in the O2 Heater Ground circuit. Perform POWERTRAIN VERIFICATION TEST VER - 5 - NGC.	All
5	Turn the ignition off. Disconnect the O2 Sensor harness connector. Disconnect the PCM harness connector. **CAUTION: DO NOT PROBE THE PCM HARNESS CONNECTORS. PROBING THE PCM HARNESS CONNECTORS WILL DAMAGE THE PCM TERMINALS RESULTING IN POOR TERMINAL TO PIN CONNECTION. INSTALL MILLER SPECIAL TOOL #8815 TO PERFORM DIAGNOSIS.** Measure the resistance of the O2 Heater Control circuit from the O2 Sensor harness connector to the appropriate terminal of special tool #8815. Is the resistance below 0.5 of an ohm? Yes → Go To 6 No → Repair the open/high resistance in the O2 Heater Control circuit. Perform POWERTRAIN VERIFICATION TEST VER - 5 - NGC.	All

P0135-O2 SENSOR 1/1 HEATER PERFORMANCE — Continued

TEST	ACTION	APPLICABILITY
6	**NOTE: Before continuing, check the PCM harness connector terminals for corrosion, damage, terminal push out. Repair as necessary.** If there are no possible causes remaining, view repair. Repair Replace and program the Powertrain Control Module in accordance with the Service Information. Perform POWERTRAIN VERIFICATION TEST VER - 5 - NGC.	All

Symptom:

P0171-FUEL SYSTEM 1/1 LEAN

When Monitored and Set Condition:

P0171-FUEL SYSTEM 1/1 LEAN

When Monitored: With the engine running in closed loop mode, the ambient/battery temperature above 20°F(-7C) and altitude below 8500 ft.

Set Condition: If the PCM multiplies short term compensation by long term adaptive and a certain percentage is exceeded for two trips, a freeze frame is stored, the MIL illuminates and a trouble code is stored.

POSSIBLE CAUSES
GOOD TRIP EQUAL TO ZERO
RESTRICTED FUEL SUPPLY LINE
FUEL PUMP INLET STRAINER PLUGGED
FUEL PUMP MODULE
O2 SENSOR
O2 SIGNAL CIRCUIT
O2 RETURN CIRCUIT
O2 SENSOR HEATER OPERATION
THROTTLE POSITION SENSOR SWEEP
MAP SENSOR OPERATION
ECT SENSOR OPERATION
ENGINE MECHANICAL PROBLEM
FUEL CONTAMINATION/EXHAUST LEAK

TEST	ACTION	APPLICABILITY
1	**NOTE: Check for contaminants that may have damaged the O2 Sensor: contaminated fuel, unapproved silicone, oil and coolant.** **NOTE: Diagnose any Misfire DTC(s) first, if set along with the fuel system DTC.** Ignition on, engine not running. With the DRBIII®, read DTCs and record the related Freeze Frame data. Is the Good Trip Counter displayed and equal to zero? Yes → Go To 2 No → Refer to the INTERMITTENT CONDITION symptom in the Driveability category. Perform POWERTRAIN VERIFICATION TEST VER - 5 - NGC.	All

P0171-FUEL SYSTEM 1/1 LEAN — Continued

TEST	ACTION	APPLICABILITY
2	**Warning: The fuel system is under a constant pressure (even with the engine off). Before testing or servicing any fuel system hose, fitting or line, the fuel system pressure must be released.** Install a fuel pressure gauge. Ignition on, engine not running. With the DRBIII®, actuate the ASD Fuel System test and observe the fuel pressure gauge. **NOTE: Fuel pressure specification is 400 KPa +/- 34 KPa (58 psi +/- 5 psi).** Turn the ignition off. Choose a conclusion that best matches your fuel pressure reading. Within Specification Go To 3 Below Specification Go To 12 **Caution: Stop All Actuations.**	All
3	**NOTE: If one of the O2 Sensors Signal or Return circuits are shorted to ground or voltage, all the other O2 Sensor voltage readings will be affected.** **NOTE: After the repairs have been made, verify proper O2 Sensor operation. If all the O2 Sensor voltage readings have not returned to normal, follow the diagnostic procedure for the remaining O2 Sensors.** Start the engine. Allow the engine to reach normal operating temperature. With the DRBIII®, read the O2 Sensor voltage. Is the voltage switching between 2.5 and 3.4 volts? Yes → Go To 4 No → Go To 9	All
4	Turn the ignition off. **NOTE: Allow the O2 Sensor to cool down before continuing the test. The O2 voltage should stabilize at 5.0 volts. Raising the hood may help in reducing under hood temps.** Ignition on, engine not running. With the DRBIII®, actuate the O2 Heater Test. With the DRBIII®, monitor O2 Sensor voltage for at least 2 minutes. Does the voltage stay above 4.5 volts? Yes → Replace the O2 Sensor. Perform POWERTRAIN VERIFICATION TEST VER - 5 - NGC. No → Go To 5	All
5	Ignition on, engine not running. With the DRBIII®, read the TP Sensor voltage. While monitoring the DRBIII®, slowly open and close the throttle. Does the voltage increase and decease smoothly? Yes → Go To 6 No → Replace the Throttle Position Sensor. Perform POWERTRAIN VERIFICATION TEST VER - 5 - NGC.	All

P0171-FUEL SYSTEM 1/1 LEAN — Continued

TEST	ACTION	APPLICABILITY
6	Turn the ignition off. Connect a Vacuum Gauge to a Manifold Vacuum source. Start the engine. Allow the engine to idle. **Note: If engine will not idle, maintain a constant RPM above idle.** With the DRBIII® in Sensors, read the MAP Sensor vacuum value. Is the DRBIII® reading within 1″ of the Vacuum Gauge reading? Yes → Go To 7 No → Replace the MAP Sensor. Perform POWERTRAIN VERIFICATION TEST VER - 5 - NGC.	All
7	**Note: For this test to be valid, the thermostat must be operating correctly.** **Note: This test works best if performed on a cold engine (cold soak)** Ignition on, engine not running. With the DRBIII®, read the Engine Coolant Temperature (ECT) Sensor value. If the engine was allowed to sit overnight (cold soak), the temperature value should be a sensible value that is somewhere close to the ambient temperature. **Note: If engine coolant temperature is above 82°C (180°F), allow the engine to cool until 65°C (150°F) is reached.** Start the Engine. During engine warm-up, monitor the ECT Sensor value. The temperature value change should be a smooth transition from start up to normal operating temperature 82°C (180°F). The value should reach at least 82°C (180°F). Did the ECT value increase with a smooth transition and did it reach at least 82°C? Yes → Go To 8 No → Replace the Engine Coolant Temperature Sensor. Perform POWERTRAIN VERIFICATION TEST VER - 5 - NGC.	All
8	Check for any of the following conditions/mechanical problems. AIR INDUCTION SYSTEM - must be free from leaks. ENGINE VACUUM - must be at least 13 inches in neutral ENGINE VALVE TIMING - must be within specifications ENGINE COMPRESSION - must be within specifications ENGINE EXHAUST SYSTEM - must be free of any restrictions or leaks. ENGINE PCV SYSTEM - must flow freely TORQUE CONVERTER STALL SPEED - must be within specifications POWER BRAKE BOOSTER - no internal vacuum leaks FUEL - must be free of contamination FUEL INJECTOR - plugged or restricted injector; control wire not connected to correct injector Are there any engine mechanical problems? Yes → Repair as necessary. Perform POWERTRAIN VERIFICATION TEST VER - 5 - NGC. No → Test Complete.	All

P0171-FUEL SYSTEM 1/1 LEAN — Continued

TEST	ACTION	APPLICABILITY
9	Ignition on, engine not running. Disconnect the O2 Sensor harness connector. With the DRBIII®, monitor the O2 Sensor voltage. The O2 Sensor voltage should read 5.0 volts on the DRBIII® with the connector disconnected. Using a jumper wire, jump the O2 Signal circuit to the O2 Return circuit at the O2 Sensor harness connector. **NOTE: The voltage should drop from 5.0 volts to 2.5 volts with the jumper wire in place.** Did the O2 Sensor volts change from 5.0 volts to 2.5 volts? Yes → Replace the O2 Sensor Perform POWERTRAIN VERIFICATION TEST VER - 5 - NGC. No → Go To 10	All
10	Turn the ignition off. Disconnect the O2 Sensor harness connector. Ignition on, engine not running. With the DRBIII®, monitor the O2 Sensor voltage. Is the voltage above 4.8 volts? Yes → Go To 11 No → Check the O2 Signal circuit for a short to ground, open, or short to voltage. Inspect the O2 Sensor connector and the PCM harness connector. If OK, replace and program the Powertrain Control Module in accordance with the Service Information. Perform POWERTRAIN VERIFICATION TEST VER - 5 - NGC.	All
11	Turn the ignition off. Disconnect the O2 Sensor harness connector. Ignition on, engine not running. Measure the voltage on the O2 Return circuit in the O2 Sensor harness connector. Is the voltage at 2.5 volts? Yes → Check the fuel system for contaminants. Also, check the exhaust system for any leaks. Perform POWERTRAIN VERIFICATION TEST VER - 5 - NGC. No → Check the O2 Return circuit for a short to ground, open, or short to voltage. Inspect the O2 Sensor connector and the PCM harness connector. If OK, replace and program the Powertrain Control Module in accordance with the Service Information. Perform POWERTRAIN VERIFICATION TEST VER - 5 - NGC.	All

P0171-FUEL SYSTEM 1/1 LEAN — Continued

TEST	ACTION	APPLICABILITY
12	Turn the ignition off. **Warning: The fuel system is under a constant pressure (even with the engine off). Before testing or servicing any fuel system hose, fitting or line, the fuel system pressure must be released.** Raise vehicle on hoist, and disconnect the fuel pressure line at the fuel pump module. Install special 5/16 fuel line adapter tool #6539 between the disconnected fuel line and the fuel pump module. Turn the ignition on. With the DRBIII®, actuate the ASD Fuel System test and observe the fuel pressure gauge. **NOTE: Fuel pressure specification is 400 KPa +/- 34 KPa (58 psi +/- 5 psi).** Is the fuel pressure within specification? Yes → Repair or replace fuel supply line as necessary. Perform POWERTRAIN VERIFICATION TEST VER - 5 - NGC. No → Go To 13 **Caution: Stop All Actuations.**	All
13	Turn the ignition off. **Warning: The fuel system is under a constant pressure (even with the engine off). Before testing or servicing any fuel system hose,fitting or line, the fuel system pressure must be released.** Remove the Fuel Pump Module and inspect the Fuel Inlet Strainer. Is the Fuel Inlet Strainer plugged? Yes → Replace the Fuel Pump Inlet Strainer. Perform POWERTRAIN VERIFICATION TEST VER - 5 - NGC. No → Go To 14	All
14	If there are no possible causes remaining, view repair. Repair Replace the Fuel Pump Module. Perform POWERTRAIN VERIFICATION TEST VER - 5 - NGC.	All

Symptom:

P0172-FUEL SYSTEM 1/1 RICH

When Monitored and Set Condition:

P0172-FUEL SYSTEM 1/1 RICH

When Monitored: With the engine running in closed loop mode, the ambient/battery temperature above 20°F(-7°C) and altitude below 8500 ft.

Set Condition: If the PCM multiplies short term compensation by long term adaptive and a purge fuel multiplier and the result is below a certain value for 30 seconds over trips, a freeze frame is stored, the MIL illuminates and a trouble code is stored.

POSSIBLE CAUSES
GOOD TRIP EQUAL TO ZERO
O2 SENSOR HEATER OPERATION
O2 SENSOR
EVAP PURGE SOLENOID OPERATION
O2 SIGNAL CIRCUIT
O2 RETURN CIRCUIT
MAP SENSOR OPERATION
ECT SENSOR OPERATION
ENGINE MECHANICAL PROBLEM
FUEL FILTER/PRESSURE REGULATOR
PCM

TEST	ACTION	APPLICABILITY
1	**NOTE: Check for contaminants that may have damaged the O2 Sensor: contaminated fuel, unapproved silicone, oil and coolant.** Ignition on, engine not running. With the DRBIII®, read DTCs and record the related Freeze Frame data. Is the Good Trip Counter displayed and equal to zero? Yes → Go To 2 No → Refer to the INTERMITTENT CONDITION symptom in the Driveability category. Perform POWERTRAIN VERIFICATION TEST VER - 5 - NGC.	All

P0172-FUEL SYSTEM 1/1 RICH — Continued

TEST	ACTION	APPLICABILITY
2	**Warning: The fuel system is under a constant pressure (even with the engine off). Before testing or servicing any fuel system hose, fitting or line, the fuel system pressure must be released.** Install a fuel pressure gauge. Ignition on, engine not running. With the DRBIII®, actuate the ASD Fuel System test and observe the fuel pressure gauge. **NOTE: Fuel pressure specification is 400 KPa +/- 34 KPa (58 psi +/- 5 psi).** Turn the ignition off. Choose a conclusion that best matches your fuel pressure reading. Within Specification Go To 3 Above Specification Replace the fuel filter/pressure regulator. Perform POWERTRAIN VERIFICATION TEST VER - 5 - NGC. **Caution: Stop All Actuations.**	All
3	**NOTE: If one of the O2 Sensors Signal or Return circuits are shorted to ground or voltage, all the other O2 Sensor voltage readings will be affected.** **NOTE: After the repairs have been made, verify proper O2 Sensor operation. If all the O2 Sensor voltage readings have not returned to normal, follow the diagnostic procedure for the remaining O2 Sensors.** Start the engine. Allow the engine to reach normal operating temperature. With the DRBIII®, read the O2 Sensor voltage. Is the voltage switching between 2.5 and 3.4 volts? Yes → Go To 4 No → Go To 9	All
4	Turn the ignition off. **NOTE: Allow the O2 Sensor to cool down before continuing the test. The O2 voltage should stabilize at 5.0 volts. Raising the hood may help in reducing under hood temps.** Ignition on, engine not running. With the DRBIII®, actuate the O2 Heater Test. With the DRBIII®, monitor O2 Sensor voltage for at least 2 minutes. Does the voltage stay above 4.5 volts? Yes → Replace the O2 Sensor. Perform POWERTRAIN VERIFICATION TEST VER - 5 - NGC. No → Go To 5	All
5	Turn the ignition off. Disconnect the hoses at the Evap Purge Solenoid. Using a hand vacuum pump, apply 10 inches of vacuum to the Evap Purge Solenoid vacuum source port on the component side. Did the Evap Purge Solenoid hold vacuum? Yes → Go To 6 No → Replace the EVAP Purge Solenoid. Perform POWERTRAIN VERIFICATION TEST VER - 5 - NGC.	All

P0172-FUEL SYSTEM 1/1 RICH — Continued

TEST	ACTION	APPLICABILITY
6	Turn the ignition off. Connect a Vacuum Gauge to a Manifold Vacuum source. Start the engine. Allow the engine to idle. **Note: If engine will not idle, maintain a constant RPM above idle.** With the DRBIII® in Sensors, read the MAP Sensor vacuum value. Is the DRB reading within 1″ of the Vacuum Gauge reading? Yes → Go To 7 No → Replace the MAP Sensor. Perform POWERTRAIN VERIFICATION TEST VER - 5 - NGC.	All
7	**Note: For this test to be valid, the thermostat must be operating correctly.** **Note: This test works best if performed on a cold engine (cold soak)** Ignition on, engine not running. With the DRBIII®, read the Engine Coolant Temperature Sensor value. If the engine was allowed to sit overnight (cold soak), the temperature value should be a sensible value that is somewhere close to the ambient temperature. **Note: If engine coolant temperature is above 82°C (180°F), allow the engine to cool until 65°C (150°F) is reached.** Start the Engine. During engine warm-up, monitor the Engine Coolant Temperature value. The temp value change should be a smooth transition from start up to normal operating temp 82°C (180°F). The value should reach at least 82°C (180°F). Did the Engine Coolant Temperature value increase a smooth transition and did it reach at least 82°C Yes → Go To 8 No → Replace the Engine Coolant Temperature Sensor. Perform POWERTRAIN VERIFICATION TEST VER - 5 - NGC.	All
8	Check for any of the following conditions/mechanical problems. AIR INDUCTION SYSTEM - must be free from restrictions. ENGINE VACUUM - must be at least 13 inches in neutral ENGINE VALVE TIMING - must be within specifications ENGINE COMPRESSION - must be within specifications ENGINE EXHAUST SYSTEM - must be free of any restrictions or leaks. ENGINE PCV SYSTEM - must flow freely TORQUE CONVERTER STALL SPEED - must be within specifications POWER BRAKE BOOSTER - no internal vacuum leaks FUEL - must be free of contamination FUEL INJECTOR - plugged or restricted injector; control wire not connected to correct injector Are there any engine mechanical problems? Yes → Repair as necessary. Perform POWERTRAIN VERIFICATION TEST VER - 5 - NGC. No → Test Complete.	All

P0172-FUEL SYSTEM 1/1 RICH — Continued

TEST	ACTION	APPLICABILITY
9	Ignition on, engine not running. Disconnect the O2 Sensor harness connector. With the DRBIII®, monitor the O2 Sensor voltage. The O2 Sensor voltage should read 5.0 volts on the DRBIII® with the connector disconnected. Using a jumper wire, jump from the O2 Signal circuit to the O2 Return circuit in the O2 Sensor harness connector. **NOTE: The voltage should drop from 5.0 volts down to 2.5 volts with the jumper wire connected.** Did the O2 Sensor voltage drop from 5 volts to 2.5 volts? Yes → Replace the O2 Sensor Perform POWERTRAIN VERIFICATION TEST VER - 5 - NGC. No → Go To 10	All
10	Turn the ignition off. Disconnect the O2 Sensor harness connector. Turn the ignition on. Measure the voltage of the O2 Signal circuit in the O2 Sensor harness connector. Is the voltage above 4.8 volts? Yes → Check the O2 Signal circuit for damage, short to ground, open, or short to voltage. Inspect the O2 Sensor connector and the PCM harness connector. If OK, replace the Powertrain Control Module in accordance with the Service Information. Perform POWERTRAIN VERIFICATION TEST VER - 5 - NGC. No → Go To 11	All
11	Turn the ignition off. Disconnect the O2 Sensor harness connector. Turn the ignition on. Measure the voltage on the O2 Return circuit in the O2 Sensor harness connector. Is the voltage at 2.5 volts? Yes → NOTE: Before continuing, check the PCM harness connector terminals for corrosion, damage, or terminal push out. Repair as necessary. Replace and program the Powertrain Control Module in accordance with the Service Information. Perform POWERTRAIN VERIFICATION TEST VER - 5 - NGC. No → Check the O2 Return circuit for damage, short to ground, open, or short to voltage. Inspect the O2 Sensor connector and the PCM harness connector. If OK, replace the Powertrain Control Module in accordance with the Service Information. Perform POWERTRAIN VERIFICATION TEST VER - 5 - NGC.	All

Symptom List:

P0201-FUEL INJECTOR #1
P0202-FUEL INJECTOR #2
P0203-FUEL INJECTOR #3
P0204-FUEL INJECTOR #4
P0205-FUEL INJECTOR #5
P0206-FUEL INJECTOR #6

Test Note: All symptoms listed above are diagnosed using the same tests. The title for the tests will be P0201-FUEL INJECTOR #1.

When Monitored and Set Condition:

P0201-FUEL INJECTOR #1

When Monitored: With battery voltage greater than 10 volts. Auto Shutdown Relay energized. Engine speed less than 3000 rpm.

Set Condition: No inductive spike is detected after injector turn off. One Trip Fault.

P0202-FUEL INJECTOR #2

When Monitored: With battery voltage greater than 10 volts. Auto Shutdown Relay energized. Engine speed less than 3000 rpm.

Set Condition: No inductive spike is detected after injector turn off. One Trip Fault.

P0203-FUEL INJECTOR #3

When Monitored: With battery voltage greater than 10 volts. Auto Shutdown Relay energized. Engine speed less than 3000 rpm.

Set Condition: No inductive spike is detected after injector turn off. One Trip Fault.

P0204-FUEL INJECTOR #4

When Monitored: With battery voltage greater than 10 volts. Auto Shutdown Relay energized. Engine speed less than 3000 rpm.

Set Condition: No inductive spike is detected after injector turn off. One Trip Fault.

P0205-FUEL INJECTOR #5

When Monitored: With battery voltage greater than 10 volts. Auto Shutdown Relay energized. Engine speed less than 3000 rpm.

Set Condition: No inductive spike is detected after injector turn off. One Trip Fault.

P0206-FUEL INJECTOR #6

When Monitored: With battery voltage greater than 10 volts. Auto Shutdown Relay energized. Engine speed less than 3000 rpm.

Set Condition: No inductive spike is detected after injector turn off. One Trip Fault.

P0201-FUEL INJECTOR #1 — Continued

POSSIBLE CAUSES
GOOD TRIP EQUAL TO ZERO
(F42) ASD RELAY OUTPUT CIRCUIT
FUEL INJECTOR
INJECTOR CONTROL CIRCUIT OPEN
INJECTOR CONTROL CIRCUIT SHORTED TO GROUND
PCM

TEST	ACTION	APPLICABILITY
1	Ignition on, engine not running. With the DRBIII®, read DTCs and record the related Freeze Frame data. Is the Good Trip Counter displayed and equal to zero? Yes → Go To 2 No → Refer to the INTERMITTENT CONDITION symptom in the Driveability category. Perform POWERTRAIN VERIFICATION TEST VER - 5 - NGC.	All
2	Turn the ignition off. Disconnect the Fuel Injector harness connector. Ignition on, engine not running. With the DRBIII®, actuate the ASD Relay. Using a 12-volt test light connected to ground, backprobe the (F42) ASD Relay Output circuit at the Fuel Injector harness connector. Does the test light illuminate brightly? Yes → Go To 3 No → Repair the open or high resistance in the (F42) ASD Relay Output circuit. Perform POWERTRAIN VERIFICATION TEST VER - 5 - NGC.	All
3	Turn the ignition off. Disconnect the Fuel Injector harness connector. Ignition on, engine not running. Using a 12-volt test light connected to 12-volts, backprobe the Injector Control circuit. With the DRBIII®, actuate the Fuel Injector. Does the test light blink/flicker? Yes → Replace the Fuel Injector. Perform POWERTRAIN VERIFICATION TEST VER - 5 - NGC. No → Go To 4	All

P0201-FUEL INJECTOR #1 — Continued

TEST	ACTION	APPLICABILITY
4	Turn the ignition off. Disconnect the Fuel Injector harness connector. Disconnect the PCM harness connectors. **CAUTION: DO NOT PROBE THE PCM HARNESS CONNECTORS. PROBING THE PCM HARNESS CONNECTORS WILL DAMAGE THE PCM TERMINALS RESULTING IN POOR TERMINAL TO PIN CONNECTION. INSTALL MILLER SPECIAL TOOL #8815 TO PERFORM DIAGNOSIS.** Measure the resistance of the Injector Control circuit from the Fuel Injector harness connector to the appropriate terminal of special tool #8815. Is the resistance below 5.0 ohms? Yes → Go To 5 No → Repair the open in the Injector Control circuit. Perform POWERTRAIN VERIFICATION TEST VER - 5 - NGC.	All
5	Turn the ignition off. Disconnect the Fuel Injector harness connector. Disconnect the PCM harness connectors. Measure the resistance between ground and the Injector Control circuit at the Fuel Injector harness connector. Is the resistance below 100 ohms? Yes → Repair the short to ground in the Injector Control circuit. Perform POWERTRAIN VERIFICATION TEST VER - 5 - NGC. No → Go To 6	All
6	**NOTE: Before continuing, check the PCM harness connector terminals for corrosion, damage, or terminal push out. Repair as necessary.** If there are no possible causes remaining, view repair. Repair Replace and program the Powertrain Control Module in accordance with the Service Information. Perform POWERTRAIN VERIFICATION TEST VER - 5 - NGC.	All

Symptom List:

P0300-MULTIPLE CYLINDER MISFIRE
P0301-CYLINDER #1 MISFIRE
P0302-CYLINDER #2 MISFIRE
P0303-CYLINDER #3 MISFIRE
P0304-CYLINDER #4 MISFIRE
P0305-CYLINDER #5 MISFIRE
P0306-CYLINDER #6 MISFIRE

Test Note: All symptoms listed above are diagnosed using the same tests. The title for the tests will be P0300-MULTIPLE CYLINDER MISFIRE.

When Monitored and Set Condition:

P0300-MULTIPLE CYLINDER MISFIRE

When Monitored: Any time the engine is running, and the Target Learning Coefficient has been successfully updated.

Set Condition: When more than a 1.8% misfire rate is measured during two trips. Above 3000 RPM 1 trip less than 3000 RPM 2 trip.

P0301-CYLINDER #1 MISFIRE

When Monitored: Any time the engine is running, and the Target Learning Coefficient has been successfully updated.

Set Condition: When more than a 1.8% misfire rate is measured during two trips, or with a 10% to 30% misfire rate during one trip.

P0302-CYLINDER #2 MISFIRE

When Monitored: Any time the engine is running, and the Target Learning Coefficient has been successfully updated.

Set Condition: When more than a 1.8% misfire rate is measured during two trips, or with a 10% to 30% misfire rate during one trip.

P0303-CYLINDER #3 MISFIRE

When Monitored: Any time the engine is running, and the Target Learning Coefficient has been successfully updated.

Set Condition: When more than a 1.8% misfire rate is measured during two trips, or with a 10% to 30% misfire rate during one trip.

P0304-CYLINDER #4 MISFIRE

When Monitored: Any time the engine is running, and the Target Learning Coefficient has been successfully updated.

Set Condition: When more than a 1.8% misfire rate is measured during two trips, or with a 10% to 30% misfire rate during one trip.

P0300-MULTIPLE CYLINDER MISFIRE — Continued

P0305-CYLINDER #5 MISFIRE

When Monitored: Any time the engine is running, and the Target Learning Coefficient has been successfully updated.

Set Condition: When more than a 1.8% misfire rate is measured during two trips, or with a 10% to 30% misfire rate during one trip.

P0306-CYLINDER #6 MISFIRE

When Monitored: Any time the engine is running, and the Target Learning Coefficient has been successfully updated.

Set Condition: When more than a 1.8% misfire rate is measured during two trips, or with a 10% to 30% misfire rate during one trip.

POSSIBLE CAUSES
INTERMITTENT MISFIRE
VISUAL AND PHYSICAL INSPECTION
IGNITION WIRE
ASD RELAY OUPUT CIRCUIT (COIL)
ENGINE MECHANICAL PROBLEM
IGNITION COIL
COIL CONTROL CIRCUIT
SPARK PLUG
CHECKING FUEL PRESSURE
FUEL PUMP INLET STRAINER PLUGGED
RESTRICTED FUEL SUPPLY LINE
FUEL PUMP MODULE
CHECKING FUEL LEAK DOWN
FUEL INJECTOR OPERATION
ASD RELAY OUTPUT CIRCUIT (INJECTOR)
FUEL INJECTOR
INJECTOR CONTROL CIRCUIT
PCM (IGNITION SYSTEM)
PCM

P0300-MULTIPLE CYLINDER MISFIRE — Continued

TEST	ACTION	APPLICABILITY
1	Read and record the FREEZE FRAME DATA. Select OBD II MONITORS. Read and record the MIS-FIRE SIMILAR CONDITIONS WINDOW DATA. With these screens, attempt to duplicate the condition(s) that has set this DTC. When the vehicle is operating in the SIMILAR CONDITIONS WINDOW, refer to the WHICH CYLINDER IS MISFIRING screen. Observe the WHICH CYLINDER IS MISFIRING screen for at least one minute. Is there a misfire present? Yes → Go To 2 No → Go To 18	All
2	**NOTE: Reviewing the vehicle repair history may aid in the repair of the misfire condition.** Visually and physically inspect the engine for any of the following conditions. - Worn serpentine belt - Binding Engine-Driven accessories. - Misaligned water pump, P/S pump and A/C compressor pulleys - Improper CKP sensor mounting - Poor connector/terminal to component connection. i.e., CKP sensor, Fuel Injector, Ign coil, etc. - Vacuum leaks - Restricted Air Induction system **NOTE: Verify the integrity of the powers and grounds for the PCM.** Were any of the above conditions present? Yes → Repair as necessary. Perform POWERTRAIN VERIFICATION TEST VER - 5 - NGC. No → Go To 3	All
3	Turn the ignition off. Disconnect the Ignition wire from the spark plug. **NOTE: Before continuing, inspect the ignition wire for damage or carbon tracking. Replace as necessary.** Install a spark tester to the ignition wire. While cranking the engine, observe the spark coming from the spark tester. **NOTE: A crisp blue spark should be generated that is able to jump the gap of the spark tester.** Is good spark present? Yes → Go To 4 No → Go To 14	All
4	Turn the ignition off. Remove the Spark Plug. Inspect the Spark Plug for the following conditions. - Cracks - Carbon Tracking - Foreign Material - Gap size out of specifications - Loose or broke electrode **NOTE: Lightly tap the bottom of the spark plug on a solid surface. The electrode in the spark plug should not move.** Were any of the above condition present? Yes → Replace the Spark Plug. Perform POWERTRAIN VERIFICATION TEST VER - 5 - NGC. No → Go To 5	All

P0300-MULTIPLE CYLINDER MISFIRE — Continued

TEST	ACTION	APPLICABILITY
5	**Warning: The fuel system is under a constant pressure (even with the engine off). Before testing or servicing any fuel system hose, fitting or line, the fuel system pressure must be released.** Install a fuel pressure gauge. Start the engine and observe the fuel pressure reading. **NOTE: Fuel pressure specification is 400 KPa +/- 34 KPa (58 psi +/- 5 psi).** Choose a conclusion that best matches your fuel pressure reading. Within Specification Go To 6 Below Specification Go To 12 Above Specification Replace the fuel filter/pressure regulator. Perform POWERTRAIN VERIFICATION TEST VER - 5 - NGC.	All
6	**NOTE: Before continuing visually and physically inspect the fuel delivery system for external leaks or damage. Repair /replace as necessary.** Turn the ignition off. **WARNING: The fuel system is under a constant pressure even with the engine off. Before testing or servicing any fuel system hose, fitting or line, the fuel system pressure must be released.** Install special 5/16 fuel line adapter tool #6539. Attach a fuel pressure test gauge to the T fitting on the tool #6539 Start the engine and allow the fuel system to reach maximum pressure. Turn the ignition off. **NOTE: Fuel specification is 400 KPa +/- 34 KPa (58 psi +/- 5 psi).** Using special tool #C4390, Hose Clamp Pliers, slowly clamp off the rubber hose on the Fuel Pressure adapter between the fuel pressure gauge and the fuel pump module. Monitor the fuel pressure gauge for a minimum of 5 minutes. **NOTE: The pressure should not fall below 241 KPa (35 psi)** Does the fuel pressure gauge fall below the above specification? Yes → Replace the leaking Injector(s). Perform POWERTRAIN VERIFICATION TEST VER - 5 - NGC. No → Go To 7	All
7	**Warning: The fuel system is under a constant pressure (even with the engine off). Before testing or servicing any fuel system hose, fitting or line, the fuel system pressure must be released.** **CAUTION: After each actuation of the Fuel Injector, start the engine to clear the cylinder of fuel. Failure to do so could cause engine damage.** Install a Fuel Pressure Gauge to the fuel rail. Start the engine and allow the fuel pressure to reach maximum pressure. Turn the engine off, leaving the ignition on. Using the DRBIII®, actuate the Fuel Injector for the cylinder that indicated the misfire. Monitor the fuel pressure gauge. Does the fuel pressure gauge indicate a drop in fuel pressure? Yes → Go To 8 No → Go To 9	All

P0300-MULTIPLE CYLINDER MISFIRE — Continued

TEST	ACTION	APPLICABILITY
8	Check for any of the following conditions/mechanical problems. ENGINE VACUUM - must be at least 13 inches in neutral ENGINE VALVE TIMING - must be within specifications ENGINE COMPRESSION - must be within specifications ENGINE EXHAUST SYSTEM - must be free of any restrictions or leaks. ENGINE PCV SYSTEM - must flow freely TORQUE CONVERTER STALL SPEED - must be within specifications POWER BRAKE BOOSTER - no internal vacuum leaks FUEL - must be free of contamination Are there any engine mechanical problems? Yes → Repair as necessary. Perform POWERTRAIN VERIFICATION TEST VER - 5 - NGC. No → Go To 18	All
9	Turn the ignition off. Disconnect the Fuel Injector harness connector. Ignition on, engine not running. With the DRBIII®, actuate the ASD Relay. Using a 12-volt test light connected to ground, probe the ASD Relay Output circuit at the Fuel Injector harness connector. Does the test light illuminate brightly? Yes → Go To 10 No → Repair the ASD Relay Output circuit. Perform POWERTRAIN VERIFICATION TEST VER - 5 - NGC.	All
10	Turn the ignition off. Disconnect the Fuel Injector harness connector. Ignition on, engine not running. Using a 12-volt test light connected to 12-volts, probe the Injector Control circuit. With the DRBIII®, actuate the Fuel Injector. Does the test light blink/flicker? Yes → Replace the Fuel Injector. Perform POWERTRAIN VERIFICATION TEST VER - 5 - NGC. No → Go To 11	All
11	Turn the ignition off. Disconnect the Fuel Injector harness connector. Disconnect the PCM harness connectors. **CAUTION: DO NOT PROBE THE PCM HARNESS CONNECTORS. PROBING THE PCM HARNESS CONNECTORS WILL DAMAGE THE PCM TERMINALS RESULTING IN POOR TERMINAL TO PIN CONNECTION. INSTALL MILLER SPECIAL TOOL #8815 TO PERFORM DIAGNOSIS.** Check the Injector Control circuit. Was a problem found with the Injector Control circuit? Yes → Repair the Injector Control circuit. Perform POWERTRAIN VERIFICATION TEST VER - 5 - NGC. No → NOTE: Before continuing, check the PCM harness connector terminals for corrosion, damage, or terminal push out. Repair as necessary. Replace and program the Powertrain Control Module in accordance with the Service Information. Perform POWERTRAIN VERIFICATION TEST VER - 5 - NGC.	All

P0300-MULTIPLE CYLINDER MISFIRE — Continued

TEST	ACTION	APPLICABILITY
12	Turn the ignition off. **Warning: The fuel system is under a constant pressure (even with the engine off). Before testing or servicing any fuel system hose, fitting or line, the fuel system pressure must be released.** Raise vehicle on hoist, and disconnect the fuel pressure line at the fuel pump module. Install special 5/16 fuel line adapter tool #6539 between the disconnected fuel line and the fuel pump module. Attach a fuel pressure test gauge to the T fitting on the tool #6539 Ignition on, engine not running. With the DRBIII®, actuate the ASD Fuel System test and observe the fuel pressure gauge. **NOTE: Fuel pressure specification is 400 KPa +/- 34 KPa (58 psi +/- 5 psi).** Is the fuel pressure within specification? Yes → Repair or replace fuel supply line as necessary. Perform POWERTRAIN VERIFICATION TEST VER - 5 - NGC. No → Go To 13	All
13	Turn the ignition off. **Warning: The fuel system is under a constant pressure (even with the engine off). Before testing or servicing any fuel system hose,fitting or line, the fuel system pressure must be released.** Remove the Fuel Pump Module and inspect the Fuel Inlet Strainer. Is the Fuel Inlet Strainer plugged? Yes → Replace the Fuel Pump Inlet Strainer. Perform POWERTRAIN VERIFICATION TEST VER - 5 - NGC. No → NOTE: Before continuing, check the Fuel Pump Module harness connector terminals for corrosion, damage, or terminal push out. Ensure the ground circuit is operating properly. Repair as necessary. Replace the Fuel Pump Module. Perform POWERTRAIN VERIFICATION TEST VER - 5 - NGC.	All
14	Turn the ignition off. Remove the ignition wire. Measure the resistance of the ignition wire. Is the resistance below 10K ohms? Yes → Go To 15 No → Replace the Ignition Wire. Perform POWERTRAIN VERIFICATION TEST VER - 5 - NGC.	All
15	Turn the ignition off. Disconnect the Ignition Coil harness connector. Ignition on, engine not running. With the DRBIII®, actuate the ASD Relay. Using a 12-volt test light connected to ground, probe the ASD Relay Output circuit at the Ignition Coil harness connector. Does the test light illuminate brightly? Yes → Go To 16 No → Repair the ASD Relay Output circuit. Perform POWERTRAIN VERIFICATION TEST VER - 5 - NGC.	All

P0300-MULTIPLE CYLINDER MISFIRE — Continued

TEST	ACTION	APPLICABILITY
16	Turn the ignition off. Disconnect the Ignition Coil harness connector. Using a 12-volt test light connected to 12-volts, probe the Ignition Coil Control circuit. Crank the engine for 5 second while observing the test light. Does the test light blink/flicker? Yes → Replace the Ignition Coil. Perform POWERTRAIN VERIFICATION TEST VER - 5 - NGC. No → Go To 17	All
17	Turn the ignition off. Disconnect the Ignition Coil harness connector. Disconnect the PCM harness connector. **CAUTION: DO NOT PROBE THE PCM HARNESS CONNECTORS. PROBING THE PCM HARNESS CONNECTORS WILL DAMAGE THE PCM TERMINALS RESULTING IN POOR TERMINAL TO PIN CONNECTION. INSTALL MILLER SPECIAL TOOL #8815 TO PERFORM DIAGNOSIS.** Check the Coil Control circuit. Was a problem found with the Coil Control circuit? Yes → Repair the Coil Control circuit. Perform POWERTRAIN VERIFICATION TEST VER - 5 - NGC. No → NOTE: Before continuing, check the PCM harness connector terminals for corrosion, damage, or terminal push out. Repair as necessary. Replace and program the Powertrain Control Module in accordance with the Service Information. Perform POWERTRAIN VERIFICATION TEST VER - 5 - NGC.	All

P0300-MULTIPLE CYLINDER MISFIRE — Continued

TEST	ACTION	APPLICABILITY
18	**NOTE: The conditions that set the DTC are not present at this time.** **WARNING: WHEN THE ENGINE IS OPERATING, DO NOT STAND IN A DIRECT LINE WITH THE FAN. DO NOT PUT YOUR HANDS NEAR THE PULLEYS, BELTS OR FAN. DO NOT WEAR LOOSE CLOTHING.** Refer to any Technical Service Bulletins (TSBs) that may apply. Review the DRB Freeze Frame information. If possible, try to duplicate the conditions under which the DTC set. With the engine running at normal operating temperature, monitor the DRB parameters related to the DTC while wiggling the wire harness. Look for parameter values to change and/or a DTC to set. Visually inspect the related wire harness. Look for any chafed, pierced, pinched, partially broken wires and broken, bent, pushed out, or corroded terminals. **CAUTION: NEVER PROBE THE PCM HARNESS CONNECTORS. PROBING THE PCM HARNESS CONNECTORS WILL DAMAGE THE PCM TERMINALS RESULTING IN POOR TERMINAL TO PIN CONNECTION. INSTALL MILLER SPECIAL TOOL #8815 TO PERFORM DIAGNOSIS.** Inspect and clean all PCM, engine, and chassis grounds. **NOTE: Reviewing the vehicle repair history may aid in the repair of the misfire condition.** Visually and physically inspect the engine for any of the following conditions. - Worn serpentine belt - Binding Engine-Driven accessories. - Misaligned water pump, P/S pump and A/C compressor pulleys - Improper CKP sensor mounting - Poor connector/terminal to component connection. i.e., CKP sensor, Fuel Injector, Ign coil, etc. - Vacuum leaks - Restricted Air Induction system Were any of the above conditions present? Yes → Repair as necessary. Perform POWERTRAIN VERIFICATION TEST VER - 5 - NGC. No → Test Complete.	All

Symptom:

P0315-NO CRANK SENSOR LEARNED

When Monitored and Set Condition:

P0315-NO CRANK SENSOR LEARNED

When Monitored: Under closed throttle decel and A/C off. ECT above 75°C (167°F). Engine start time is greater than 50 seconds.

Set Condition: One of the CKP sensor target windows has more than 2.86% variance from the reference. One Trip Fault.

POSSIBLE CAUSES
DTC VERIFICATION
TONE WHEEL/PULSE RING INSPECTION
WIRING HARNESS INSPECTION
CRANKSHAFT POSITION SENSOR

TEST	ACTION	APPLICABILITY
1	**NOTE: Check for any TSBs that may apply to this symptom.** Ignition on, engine not running. With the DRBIII®, clear DTCs, and perform the PCM battery disconnect to reset the PCM. Start the engine. If the MIL has not yet illuminated, test drive the vehicle to try to get the code to reset. Does the code reset while cranking or during the test drive? Yes → Go To 2 No → Refer to the INTERMITTENT CONDITION symptom in the Driveability category. Perform POWERTRAIN VERIFICATION TEST VER - 5 - NGC.	All
2	Visually inspect the CKP wire harness. Look for any chafed, pierced, pinched, or partially broken wires. Visually inspect the CKP wire harness connectors. Look for broken, bent, pushed out, or corroded terminals. Ensure the Crankshaft Position Sensor is properly installed and the mounting bolt tight. Refer to any TSB that may apply. Were any of the above conditions present? Yes → Repair as necessary Perform POWERTRAIN VERIFICATION TEST VER - 5 - NGC. No → Go To 3	All

P0315-NO CRANK SENSOR LEARNED — Continued

TEST	ACTION	APPLICABILITY
3	Turn the ignition off. Remove the Crankshaft Position Sensor. Inspect the Tone Wheel/Flex Plate slots for damage, foreign material, or excessive movement. Were any problems found? Yes → Repair or replace the Tone Wheel/Flex Plate as necessary. Perform POWERTRAIN VERIFICATION TEST VER - 5 - NGC. No → Go To 4	All
4	If there are no possible causes remaining, view repair. Repair Replace the Crankshaft Position Sensor. Perform POWERTRAIN VERIFICATION TEST VER - 5 - NGC.	All

Symptom:

P0325-KNOCK SENSOR #1 CIRCUIT

When Monitored and Set Condition:

P0325-KNOCK SENSOR #1 CIRCUIT

When Monitored: With the ignition on and the engine running.

Set Condition: The Knock Sensor circuit voltage falls below a minimum value at idle or deceleration. The minimum value is from a look-up table internal to the PCM and is based on engine rpm. DTC also sets if sensor output goes above 5.0 volts. One Trip Fault.

POSSIBLE CAUSES
GOOD TRIP EQUAL TO ZERO
(K42) KS SIGNAL CIRCUIT SHORTED TO VOLTAGE
(K42) KS SIGNAL CIRCUIT SHORTED TO GROUND
(K42) KS SIGNAL CIRCUIT OPEN
(K42) KS SIGNAL CIRCUIT SHORTED TO (K45) KS RETURN CIRCUIT
(K45) KS RETURN CIRCUIT OPEN
KNOCK SENSOR

TEST	ACTION	APPLICABILITY
1	Ignition on, engine not running. With the DRBIII®, read DTCs and record the related Freeze Frame data. Is the Good Trip displayed and equal to zero? Yes → Go To 2 No → Refer to the INTERMITTENT CONDITION symptom in the Driveability category. Perform POWERTRAIN VERIFICATION TEST VER - 5 - NGC.	All
2	Turn the ignition off. Disconnect the Knock Sensor harness connector. Measure the voltage of the (K42) KS Signal circuit in the Knock Sensor harness connector. Is the voltage above 2.0 volts? Yes → Repair the short to voltage in the (K42) KS Signal circuit. Perform POWERTRAIN VERIFICATION TEST VER - 5 - NGC. No → Go To 3	All

P0325-KNOCK SENSOR #1 CIRCUIT — Continued

TEST	ACTION	APPLICABILITY
3	Turn the ignition off. Disconnect the Knock Sensor harness connector. Disconnect the PCM harness connector. Measure the resistance between ground and the (K42) KS Signal circuit at the Knock Sensor harness connector. Is the resistance below 100 ohms? Yes → Repair the short to ground in the (K42) KS Signal circuit. Perform POWERTRAIN VERIFICATION TEST VER - 5 - NGC. No → Go To 4	All
4	Turn the ignition off. Disconnect the Knock Sensor harness connector. Disconnect the PCM harness connector. **CAUTION: DO NOT PROBE THE PCM HARNESS CONNECTORS. PROBING THE PCM HARNESS CONNECTORS WILL DAMAGE THE PCM TERMINALS RESULTING IN POOR TERMINAL TO PIN CONNECTION. INSTALL MILLER SPECIAL TOOL #8815 TO PERFORM DIAGNOSIS.** Measure the resistance of the (K42) KS Signal circuit from the Knock Sensor harness connector to the appropriate terminal of special tool #8815. Is the resistance below 5.0 ohms? Yes → Go To 5 No → Repair the open in the (K42) KS Signal circuit. Perform POWERTRAIN VERIFICATION TEST VER - 5 - NGC.	All
5	Turn the ignition off. Disconnect the Knock Sensor harness connector. Measure the resistance between the (K42) KS Signal circuit and the (K45) KS Return circuit in the Knock Sensor harness connector. Is the resistance below 100 ohms? Yes → Repair the (K42) KS Signal circuit for a short to (K45) KS Return circuit. Perform POWERTRAIN VERIFICATION TEST VER - 5 - NGC. No → Go To 6	All
6	Turn the ignition off. Disconnect the Knock Sensor harness connector. Disconnect the PCM harness connector. **CAUTION: DO NOT PROBE THE PCM HARNESS CONNECTORS. PROBING THE PCM HARNESS CONNECTORS WILL DAMAGE THE PCM TERMINALS RESULTING IN POOR TERMINAL TO PIN CONNECTION. INSTALL MILLER SPECIAL TOOL #8815 TO PERFORM DIAGNOSIS.** Measure the resistance of the (K45) KS Return circuit from the Knock Sensor harness connector to the appropriate terminal of special tool #8815. Is the resistance below 5.0 ohms? Yes → Go To 7 No → Repair the open in the (K45) KS Return circuit. Perform POWERTRAIN VERIFICATION TEST VER - 5 - NGC.	All

P0325-KNOCK SENSOR #1 CIRCUIT — Continued

TEST	ACTION	APPLICABILITY
7	Turn the ignition off. Replace the Knock Sensor. Ignition on, engine not running. With the DRBIII®, erase DTC. Attempt to operate the vehicle using the information noted in the Freeze Frame. With the DRBIII®, read DTC's. Does the DRBIII® display the DTC that was previously erased? Yes → NOTE: Before continuing, check the PCM harness connector terminals for corrosion, damage, or terminal push out. Repair as necessary. Replace and program the Powertrain Control Module in accordance with the Service Information. Perform POWERTRAIN VERIFICATION TEST VER - 5 - NGC. No → Test Complete.	All

Symptom:

P0335-CRANKSHAFT POSITION SENSOR CIRCUIT

When Monitored and Set Condition:

P0335-CRANKSHAFT POSITION SENSOR CIRCUIT

When Monitored: Engine cranking.

Set Condition: No CKP signal is present during engine cranking, and at least 8 camshaft position sensor signals have occurred. One trip fault.

POSSIBLE CAUSES
CHECKING INTERMITTENT CMP SIGNAL WITH LAB
INTERMITTENT CKP SIGNAL
(K6) 5 VOLT SUPPLY CIRCUIT SHORTED TO GROUND
(K6) 5 VOLT SUPPLY CIRCUIT OPEN
(K6) 5 VOLT SUPPLY CIRCUIT SHORTED TO VOLTAGE
(K24) CKP SIGNAL CIRCUIT SHORTED GROUND
(K24) CKP SIGNAL CIRCUIT OPEN
(K24) CKP SIGNAL CIRCUIT SHORTED TO VOLTAGE
(K24) CKP SIGNAL SHORTED TO (K6) 5 VOLT SUPPLY CIRCUIT
(K4) SENSOR GROUND CIRCUIT OPEN
PCM - (K6) 5 VOLT SUPPLY
PCM - (K24) CKP SIGNAL
CRANKSHAFT POSITION SENSOR

TEST	ACTION	APPLICABILITY
1	Start the engine. With the DRBIII®, read the CKP SYNC State. Does the DRBIII® display CKP SYNC state IN SYNC? Yes → Go To 2 No → Go To 4	All

P0335-CRANKSHAFT POSITION SENSOR CIRCUIT — Continued

TEST	ACTION	APPLICABILITY
2	Turn the ignition off. With the DRBIII® lab scope probe and the Miller special tool #6801, back probe the (K44) Camshaft Position (CMP) Sensor Signal circuit in the CMP harness connector. **WARNING: WHEN THE ENGINE IS OPERATING, DO NOT STAND IN A DIRECT LINE WITH THE FAN. DO NOT PUT YOUR HANDS NEAR THE PULLEYS, BELTS OR FAN. DO NOT WEAR LOOSE CLOTHING.** Ignition on, engine not running. Wiggle the related wire harness and lightly tap on the Cam Position Sensor. Observe the lab scope screen. Look for any pulses generated by the CMP Sensor. Start the engine. Allow the engine to idle. Observe the lab scope screen. Did the CMP Sensor generate any erratic pulses? Yes → Repair as necessary. Perform POWERTRAIN VERIFICATION TEST VER - 5 - NGC. No → Go To 3	All
3	Turn the ignition off. With the DRBIII® lab scope probe and the Miller special tool #6801, backprobe the (K24) CKP Signal circuit in the CKP harness connector. **WARNING: WHEN THE ENGINE IS OPERATING, DO NOT STAND IN A DIRECT LINE WITH THE FAN. DO NOT PUT YOUR HANDS NEAR THE PULLEYS, BELTS OR FAN. DO NOT WEAR LOOSE CLOTHING.** Ignition on, engine not running. Wiggle the related wire harness and lightly tap on the Crank Position Sensor. Observe the lab scope screen. Look for any pulses generated by the CKP Sensor. Start the engine. Allow the engine to idle. Observe the lab scope screen. Did the CKP Sensor generate any pulses? Yes → Repair as necessary. Perform POWERTRAIN VERIFICATION TEST VER - 5 - NGC. No → Test Complete.	All
4	Turn the ignition off. Disconnect the CKP Sensor harness connector. Ignition on, engine not running. Measure the voltage of the (K6) 5 Volt Supply circuit in the CKP Sensor harness connector. Is the voltage between 4.5 and 5.5 volts? Yes → Go To 5 No → Go To 13	All
5	Turn the ignition off. Disconnect the CKP Sensor harness connector. Ignition on, engine not running. Measure the voltage of the (24) CKP Signal circuit in the CKP Sensor harness connector. Is the voltage between 4.5 and 5.0 volts? Yes → Go To 6 No → Go To 8	All

P0335-CRANKSHAFT POSITION SENSOR CIRCUIT — Continued

TEST	ACTION	APPLICABILITY
6	Turn the ignition off. Disconnect the CKP Sensor harness connector. Disconnect the PCM harness connector. **CAUTION: DO NOT PROBE THE PCM HARNESS CONNECTORS. PROBING THE PCM HARNESS CONNECTORS WILL DAMAGE THE PCM TERMINALS RESULTING IN POOR TERMINAL TO PIN CONNECTION. INSTALL MILLER SPECIAL TOOL #8815 TO PERFORM DIAGNOSIS.** Measure the resistance of the (K4) Sensor Ground circuit from the CKP Sensor harness connector to the appropriate terminal of special tool #8815. Is the resistance below 5.0 ohms? Yes → Go To 7 No → Repair the open in the (K4) Sensor Ground circuit. Perform POWERTRAIN VERIFICATION TEST VER - 5 - NGC.	All
7	**NOTE: Inspect the slots on the flywheel for damage. If a problem is found repair as necessary.** If there are no possible causes remaining, view repair. Repair Replace the Crankshaft Position Sensor. Perform POWERTRAIN VERIFICATION TEST VER - 5 - NGC.	All
8	Turn the ignition off. Disconnect the CKP Sensor harness connector. Disconnect the PCM harness connector. Measure the resistance between ground and the (K24) CKP Signal circuit in the CKP Sensor harness connector. Is the resistance below 5.0 ohms? Yes → Repair the short to ground in the (K24) CKP Signal circuit. Perform POWERTRAIN VERIFICATION TEST VER - 5 - NGC. No → Go To 9	All
9	Turn the ignition off. Disconnect the CKP Sensor harness connector. Disconnect the PCM harness connector. **CAUTION: DO NOT PROBE THE PCM HARNESS CONNECTORS. PROBING THE PCM HARNESS CONNECTORS WILL DAMAGE THE PCM TERMINALS RESULTING IN POOR TERMINAL TO PIN CONNECTION. INSTALL MILLER SPECIAL TOOL #8815 TO PERFORM DIAGNOSIS.** Measure the resistance of the (K24) CKP Signal circuit from the CKP Sensor harness connector to the appropriate terminal of special tool #8815. Is the resistance below 5.0 ohms? Yes → Go To 10 No → Repair the open in the (K24) CKP Signal circuit. Perform POWERTRAIN VERIFICATION TEST VER - 5 - NGC.	All

P0335-CRANKSHAFT POSITION SENSOR CIRCUIT — Continued

TEST	ACTION	APPLICABILITY
10	Turn the ignition off. Disconnect the CKP Sensor harness connector. Ignition on, engine not running. Measure the voltage of the (K24) CKP Signal circuit in the CKP Sensor harness connector. Is the voltage above 5.5 volts? Yes → Repair the short to battery voltage in the (K24) CKP Signal circuit. Perform POWERTRAIN VERIFICATION TEST VER - 5 - NGC. No → Go To 11	All
11	Turn the ignition off. Disconnect the CKP Sensor harness connector. Disconnect the PCM harness connector. Measure the resistance between the (K24) CKP Signal circuit and the (K6) 5 Volt Supply circuit in the CKP Sensor harness connector. Is the resistance below 5.0 ohms? Yes → Repair the (K24) CKP Signal circuit shorted to the (K6) 5 Volt Supply circuit. Perform POWERTRAIN VERIFICATION TEST VER - 5 - NGC. No → Go To 12	All
12	**NOTE: Before continuing, check the PCM harness connector terminals for corrosion, damage, or terminal push out. Repair as necessary.** If there are no possible causes remaining, view repair. Repair Replace and program the Powertrain Control Module in accordance with the Service Information. Perform POWERTRAIN VERIFICATION TEST VER - 5 - NGC.	All
13	Turn the ignition off. Disconnect the CKP Sensor harness connector. Disconnect the PCM harness connector. Measure the resistance between ground and the (K6) 5 Volt Supply circuit in the CKP Sensor harness connector. Is the resistance below 100 ohms? Yes → Repair the short to ground in the (K6) 5 Volt Supply circuit. Perform POWERTRAIN VERIFICATION TEST VER - 5 - NGC. No → Go To 14	All
14	Turn the ignition off. Disconnect the CKP Sensor harness connector. Disconnect the PCM harness connector. **CAUTION: DO NOT PROBE THE PCM HARNESS CONNECTORS. PROBING THE PCM HARNESS CONNECTORS WILL DAMAGE THE PCM TERMINALS RESULTING IN POOR TERMINAL TO PIN CONNECTION. INSTALL MILLER SPECIAL TOOL #8815 TO PERFORM DIAGNOSIS.** Measure the resistance of the (K6) 5 Volt Supply circuit from the CKP Sensor harness connector to the appropriate terminal of special tool #8815. Is the resistance below 5.0 ohms? Yes → Go To 15 No → Repair the open in the (K6) 5 Volt Supply circuit. Perform POWERTRAIN VERIFICATION TEST VER - 5 - NGC.	All

P0335-CRANKSHAFT POSITION SENSOR CIRCUIT — Continued

TEST	ACTION	APPLICABILITY
15	Turn the ignition off. Disconnect the CKP Sensor harness connector. Ignition on, engine not running. Measure the voltage on the (K6) 5 Volt Supply circuit in the CKP Sensor harness connector. Is the voltage above 5.5 volts? Yes → Repair the short to battery voltage in the (K6) 5 Volt Supply circuit. Perform POWERTRAIN VERIFICATION TEST VER - 5 - NGC. No → Go To 16	All
16	**NOTE: Before continuing, check the PCM harness connector terminals for corrosion, damage, or terminal push out. Repair as necessary.** If there are no possible causes remaining, view repair. Repair Replace and program the Powertrain Control Module in accordance with the Service Information. Perform POWERTRAIN VERIFICATION TEST VER - 5 - NGC.	All

Symptom:

P0339-CRANKSHAFT POSITION SENSOR INTERMITTENT

When Monitored and Set Condition:

P0339-CRANKSHAFT POSITION SENSOR INTERMITTENT

When Monitored: Engine running or Cranking.

Set Condition: When the failure counter reaches 20. One Trip Fault.

POSSIBLE CAUSES
GOOD TRIP EQUAL TO ZERO
WIRING HARNESS INSPECTION
(K6) 5 VOLT SUPPLY CIRCUIT OPEN OR SHORTED TO GROUND
TONE WHEEL/PULSE RING INSPECTION
CHECKING CAMSHAFT POSITION SENSOR SIGNAL WITH THE DRBIII® LAB
CRANKSHAFT POSITION SENSOR
(K24) CKP SIGNAL CIRCUIT OPEN
(K24) CKP SIGNAL CIRCUIT SHORT TO GROUND
(K24) CKP SIGNAL CIRCUIT SHORTED TO B+
(K24) CKP SIGNAL CIRCUIT SHORT TO (K6) 5 VOLTS
PCM

TEST	ACTION	APPLICABILITY
1	Ignition on, engine not running. With the DRBIII®, read DTCs and record the related Freeze Frame data. Is the Good Trip Counter displayed and equal to zero? Yes → Go To 2 No → Refer to the INTERMITTENT CONDITION symptom in the Driveability category. Perform POWERTRAIN VERIFICATION TEST VER - 5 - NGC.	All

P0339-CRANKSHAFT POSITION SENSOR INTERMITTENT — Continued

TEST	ACTION	APPLICABILITY
2	With the DRBIII®, read and record Freeze Frame Data specific to the CKP signal, ECT, RPM, Sync state, vehicle speed, etc. Turn the ignition off. With the DRBIII® lab scope probe and the Miller special tool #6801, backprobe the (K24) CKP Signal circuit at the Sensor harness connector. **WARNING: WHEN THE ENGINE IS OPERATING, DO NOT STAND IN A DIRECT LINE WITH THE FAN. DO NOT PUT YOUR HANDS NEAR THE PULLEYS, BELTS OR FAN. DO NOT WEAR LOOSE CLOTHING.** Ignition on, engine not running. Observe the lab scope screen at least 1 minute and then start the vehicle. Continue observing the lab scope screen for an additional minute. Were there any irregular or missing signals? Yes → Go To 3 No → Go To 8	All
3	Visually inspect the related wire harness including the ground circuit. Look for any chafed, pierced, pinched, or partially broken wires. Visually inspect the related wire harness connectors. Look for broken, bent, pushed out, or corroded terminals. Ensure the Crankshaft Position Sensor and the Camshaft Position Sensor are properly installed and the mounting bolt(s) are tight. Refer to any TSBs that may apply. Were any of the above conditions present? Yes → Repair as necessary Perform POWERTRAIN VERIFICATION TEST VER - 5 - NGC. No → Go To 4	All
4	Turn the ignition off. Disconnect the CKP Sensor connector. Ignition on, engine not running. Measure the voltage on the (K6) 5 Volt Supply circuit. Is the voltage between 4.5 and 5.5 volts? Yes → Go To 5 No → Repair the open or short to ground in the (K6) 5 Volt Supply circuit. Use Miller special tool #8815 when checking for an open circuit to prevent PCM harness connector terminal damage. Perform POWERTRAIN VERIFICATION TEST VER - 5 - NGC.	All
5	Turn the ignition off. Carefully disconnect the Battery (-) Ground cable. Remove the Crankshaft Position Sensor. Inspect the Tone Wheel/Flex Plate slots for damage, foreign material, or excessive movement. Were any problems found? Yes → Repair or replace the Tone Wheel/Flex Plate as necessary. Perform POWERTRAIN VERIFICATION TEST VER - 5 - NGC. No → Go To 6	All

P0339-CRANKSHAFT POSITION SENSOR INTERMITTENT — Continued

TEST	ACTION	APPLICABILITY
6	**NOTE: An intermittent glitch in the Camshaft Position Sensor can cause the P0339 to set.** Turn the ignition off. With the DRBIII® lab scope probe and the Miller special tool #6801, backprobe the (K44) CMP Signal circuit at the Sensor harness connector. **WARNING: WHEN THE ENGINE IS OPERATING, DO NOT STAND IN A DIRECT LINE WITH THE FAN. DO NOT PUT YOUR HANDS NEAR THE PULLEYS, BELTS OR FAN. DO NOT WEAR LOOSE CLOTHING.** Ignition on, engine not running. Wiggle the related wire harness and lightly tap on the Camshaft Position Sensor. While observing the lab scope screen. Start the engine. Observe the lab scope screen. Are there any irregular or missing signals? Yes → Repair as necessary. Perform POWERTRAIN VERIFICATION TEST VER - 5 - NGC. No → Go To 7	All
7	If there are no possible causes remaining, view repair. Repair Replace the Crankshaft Position Sensor. Perform POWERTRAIN VERIFICATION TEST VER - 5 - NGC.	All
8	Turn the ignition off. Disconnect the CKP Sensor connector. Disconnect the PCM connector. **CAUTION: DO NOT PROBE THE PCM HARNESS CONNECTORS. PROBING THE PCM HARNESS CONNECTORS WILL DAMAGE THE PCM TERMINALS RESULTING IN POOR TERMINAL TO PIN CONNECTION. INSTALL MILLER SPECIAL TOOL #8815 TO PERFORM DIAGNOSIS.** Measure the resistance in the (K24) CKP Signal circuit between the CKP harness connector and the appropriate terminal of special tool #8815. Wiggle the wire harness while taking this measurement. Is the resistance below 1.0 ohm? Yes → Go To 9 No → Repair the open/high resistance in the (K24) CKP Signal circuit. Perform POWERTRAIN VERIFICATION TEST VER - 5 - NGC.	All
9	Turn the ignition off. Disconnect the PCM connector. Disconnect the CKP Sensor connector. Measure the resistance between ground and the (K24) CKP Signal circuit at the CKP Sensor harness connector. Wiggle the related wire harness while monitoring the resistance value. Does the resistance stay below 100 ohms? Yes → Repair the short to ground in the (K24) CKP Signal circuit. Perform POWERTRAIN VERIFICATION TEST VER - 5 - NGC. No → Go To 10	All

P0339-CRANKSHAFT POSITION SENSOR INTERMITTENT — Continued

TEST	ACTION	APPLICABILITY
10	Turn the ignition off. Disconnect the CKP Sensor connector. Ignition on, engine not running. Measure the voltage on the (K24) CKP Signal circuit. Wiggle the related wire harness while taking this measurement. Does the voltage ever increase above 5.5 volts? Yes → Repair the short to B+ voltage in the (K24) CKP Signal circuit. Perform POWERTRAIN VERIFICATION TEST VER - 5 - NGC. No → Go To 11	All
11	Turn the ignition off. Disconnect the PCM harness connector. Disconnect the CKP Sensor harness connector. Measure the resistance between the (K6) 5 Volt Supply circuit and the (K24) CKP signal circuit at the CKP Sensor harness connector. Wiggle the related wire harness while taking this measurement. Is the resistance below 5.0 ohms? Yes → Repair the short to the (K6) 5 Volt Supply circuit in the (K24) CKP Signal circuit. Perform POWERTRAIN VERIFICATION TEST VER - 5 - NGC. No → Go To 12	All
12	**NOTE: Before continuing, check the PCM harness connector terminals for corrosion, damage, or terminal push out. Repair as necessary.** If there are no possible causes remaining, review repair. Repair Replace and program the Powertrain Control Module in accordance with the Service Information. Perform POWERTRAIN VERIFICATION TEST VER - 5 - NGC.	All

Symptom:

P0340-CAMSHAFT POSITION SENSOR CIRCUIT

When Monitored and Set Condition:

P0340-CAMSHAFT POSITION SENSOR CIRCUIT

When Monitored: Engine cranking/running. Battery voltage greater than 10 volts.

Set Condition: At least 5 seconds or 2.5 engine revolutions have elapsed with crankshaft position sensor signals present but no camshaft position sensor signal. One Trip Fault.

POSSIBLE CAUSES
INTERMITTENT CRANKSHAFT POSITION SENSOR SIGNAL
INTERMITTENT CAMSHAFT POSITION SENSOR SIGNAL
(K6) 5 VOLT SUPPLY CIRCUIT SHORTED TO GROUND
(K6) 5 VOLT SUPPLY CIRCUIT OPEN
(K6) 5 VOLT SUPPLY CIRCUIT SHORTED TO VOLTAGE
(K44) CMP SIGNAL CIRCUIT SHORTED GROUND
(K44) CMP SIGNAL CIRCUIT OPEN
(K44) CMP SIGNAL CIRCUIT SHORTED TO VOLTAGE
(K44) CMP SIGNAL SHORTED TO (K6) 5 VOLT SUPPLY CIRCUIT
(K4) SENSOR GROUND CIRCUIT OPEN
PCM - (K6) 5 VOLT SUPPLY
PCM - (K44) CMP SIGNAL
CAMSHAFT POSITION SENSOR

TEST	ACTION	APPLICABILITY
1	Start the engine. With the DRBIII®, read the CMP SYNC State. Does the DRBIII® display the CMP SYNC State IN SYNC? Yes → Go To 2 No → Go To 4	All

P0340-CAMSHAFT POSITION SENSOR CIRCUIT — Continued

TEST	ACTION	APPLICABILITY
2	Turn the ignition off. With the DRBIII® lab scope probe and the Miller special tool #6801, back probe the (K24) CKP signal circuit in the CKP harness connector. **WARNING: WHEN THE ENGINE IS OPERATING, DO NOT STAND IN A DIRECT LINE WITH THE FAN. DO NOT PUT YOUR HANDS NEAR THE PULLEYS, BELTS OR FAN. DO NOT WEAR LOOSE CLOTHING.** Ignition on, engine not running. Wiggle the related wire harness and lightly tap the Crankshaft Position Sensor. Observe the lab scope screen. Start the engine. Allow the engine to idle. Observe the lab scope screen. Did the CKP Sensor generate any erratic pulses? Yes → Repair as necessary. Perform POWERTRAIN VERIFICATION TEST VER - 5 - NGC. No → Go To 3	All
3	Turn the ignition off. With the DRBIII® lab scope probe and the Miller special tool #6801, backprobe the (K44) CMP Signal circuit in the CMP harness connector. **WARNING: WHEN THE ENGINE IS OPERATING, DO NOT STAND IN A DIRECT LINE WITH THE FAN. DO NOT PUT YOUR HANDS NEAR THE PULLEYS, BELTS OR FAN. DO NOT WEAR LOOSE CLOTHING.** Ignition on, engine not running. Wiggle the related wire harness and lightly tap on the Camshaft Position Sensor. Observe the lab scope screen. Start the engine. Allow the engine to idle. Observe the lab scope screen. Did the CMP Sensor generate any erratic pulses? Yes → Repair as necessary. Perform POWERTRAIN VERIFICATION TEST VER - 5 - NGC. No → Test Complete.	All
4	Turn the ignition off. Disconnect the CMP Sensor harness connector. Ignition on, engine not running. Measure the voltage of the (K6) 5 Volt Supply circuit in the CMP Sensor harness connector. Is the voltage between 4.5 and 5.5 volts? Yes → Go To 5 No → Go To 13	All
5	Turn the ignition off. Disconnect the CMP Sensor harness connector. Ignition on, engine not running. Measure the voltage of the (K44) CMP Signal circuit in the CMP Sensor harness connector. Is the voltage between 4.5 and 5.0 volts? Yes → Go To 6 No → Go To 8	All

P0340-CAMSHAFT POSITION SENSOR CIRCUIT — Continued

TEST	ACTION	APPLICABILITY
6	Turn the ignition off. Disconnect the CMP Sensor harness connector. Disconnect the PCM harness connector. **CAUTION: DO NOT PROBE THE PCM HARNESS CONNECTORS. PROBING THE PCM HARNESS CONNECTORS WILL DAMAGE THE PCM TERMINALS RESULTING IN POOR TERMINAL TO PIN CONNECTION. INSTALL MILLER SPECIAL TOOL #8815 TO PERFORM DIAGNOSIS.** Measure the resistance of the (K4) Sensor Ground circuit from the CMP Sensor harness connector to the appropriate terminal of special tool #8815. Is the resistance below 5.0 ohms? Yes → Go To 7 No → Repair the open in the (K4) Sensor Ground circuit. Perform POWERTRAIN VERIFICATION TEST VER - 5 - NGC.	All
7	**NOTE: Inspect the Camshaft sprocket for damage per the Service Information. If a problem is found repair as necessary.** If there are no possible causes remaining, view repair. Repair Replace the Camshaft Position Sensor. Perform POWERTRAIN VERIFICATION TEST VER - 5 - NGC.	All
8	Turn the ignition off. Disconnect the CMP Sensor harness connector. Disconnect the PCM harness connector. Measure the resistance between ground and the (K44) CMP Signal circuit in the CMP Sensor harness connector. Is the resistance below 100 ohms? Yes → Repair the short to ground in the (K44) CMP Signal circuit Perform POWERTRAIN VERIFICATION TEST VER - 5 - NGC. No → Go To 9	All
9	Turn the ignition off. Disconnect the CMP Sensor harness connector. Disconnect the PCM harness connector. **CAUTION: DO NOT PROBE THE PCM HARNESS CONNECTORS. PROBING THE PCM HARNESS CONNECTORS WILL DAMAGE THE PCM TERMINALS RESULTING IN POOR TERMINAL TO PIN CONNECTION. INSTALL MILLER SPECIAL TOOL #8815 TO PERFORM DIAGNOSIS.** Measure the resistance of the (K44) CMP Signal circuit from the CMP Sensor harness connector to the appropriate terminal of special tool #8815. Is the resistance below 5.0 ohms? Yes → Go To 10 No → Repair the open in the (K44) CMP Signal circuit. Perform POWERTRAIN VERIFICATION TEST VER - 5 - NGC.	All

P0340-CAMSHAFT POSITION SENSOR CIRCUIT — Continued

TEST	ACTION	APPLICABILITY
10	Turn the ignition off. Disconnect the CMP Sensor harness connector. Ignition on, engine not running. Measure the voltage of the (K44) CMP Signal circuit in the CMP Sensor harness connector. Is the voltage above 5.2 volts? Yes → Repair the short to battery voltage in the (K44) CMP Signal circuit. Perform POWERTRAIN VERIFICATION TEST VER - 5 - NGC. No → Go To 11	All
11	Turn the ignition off. Disconnect the CMP Sensor harness connector. Measure the resistance between the (K44) CMP Signal circuit and the (K6) 5 Volt Supply circuit in the CMP Sensor harness connector. Is the resistance below 5.0 ohms? Yes → Repair the (K44) CMP Signal circuit shorted to the (K6) 5 Volt Supply circuit. Perform POWERTRAIN VERIFICATION TEST VER - 5 - NGC. No → Go To 12	All
12	**NOTE: Before continuing, check the PCM harness connector terminals for corrosion, damage, or terminal push out. Repair as necessary.** If there are no possible causes remaining, view repair. Repair Replace and program the Powertrain Control Module in accordance with the Service Information. Perform POWERTRAIN VERIFICATION TEST VER - 5 - NGC.	All
13	Turn the ignition off. Disconnect the CMP Sensor harness connector. Disconnect the PCM harness connector. Measure the resistance between ground and the (K6) 5 Volt Supply circuit in the CMP Sensor harness connector. Is the resistance below 100 ohms? Yes → Repair the short to ground in the (K6) 5 Volt Supply circuit. Perform POWERTRAIN VERIFICATION TEST VER - 5 - NGC. No → Go To 14	All
14	Turn the ignition off. Disconnect the CMP Sensor harness connector. Disconnect the PCM harness connector. **CAUTION: DO NOT PROBE THE PCM HARNESS CONNECTORS. PROBING THE PCM HARNESS CONNECTORS WILL DAMAGE THE PCM TERMINALS RESULTING IN POOR TERMINAL TO PIN CONNECTION. INSTALL MILLER SPECIAL TOOL #8815 TO PERFORM DIAGNOSIS.** Measure the resistance of the (K6) 5 Volt Supply circuit between the CMP Sensor harness connector and the special tool #8815 terminal. Is the resistance below 5.0 ohms? Yes → Go To 15 No → Repair the open in the (K6) 5 Volt Supply circuit. Perform POWERTRAIN VERIFICATION TEST VER - 5 - NGC.	All

P0340-CAMSHAFT POSITION SENSOR CIRCUIT — Continued

TEST	ACTION	APPLICABILITY
15	Turn the ignition off. Disconnect the CMP Sensor harness connector. Ignition on, engine not running. Measure the voltage of the (K6) 5 Volt Supply circuit in the CMP Sensor harness connector. Is the voltage above 5.5 volts? Yes → Repair the short to battery voltage in the (K6) 5 Volt Supply circuit. Perform POWERTRAIN VERIFICATION TEST VER - 5 - NGC. No → Go To 16	All
16	**NOTE: Before continuing, check the PCM harness connector terminals for corrosion, damage, or terminal push out. Repair as necessary.** If there are no possible causes remaining, view repair. Repair Replace and program the Powertrain Control Module in accordance with the Service Information. Perform POWERTRAIN VERIFICATION TEST VER - 5 - NGC.	All

Symptom:
P0344-CAMSHAFT POSITION SENSOR INTERMITTENT

When Monitored and Set Condition:

P0344-CAMSHAFT POSITION SENSOR INTERMITTENT

When Monitored: Engine running or Cranking.

Set Condition: When the failure counter reaches 20. One Trip Fault.

POSSIBLE CAUSES
GOOD TRIP EQUAL TO ZERO
WIRING HARNESS INSPECTION
(K6) 5 VOLT SUPPLY CIRCUIT OPEN OR SHORTED TO GROUND
TONE WHEEL/PULSE RING INSPECTION
CHECKING CKP SIGNAL WITH THE DRBIII® LAB
CAMSHAFT POSITION SENSOR
(K44) CMP SIGNAL CIRCUIT OPEN
(K44) CMP SIGNAL CIRCUIT SHORT TO GROUND
(K44) CMP SIGNAL CIRCUIT SHORTED TO B+
(K44) CMP SIGNAL CIRCUIT SHORT TO (K6) 5 VOLTS
PCM

TEST	ACTION	APPLICABILITY
1	Ignition on, engine not running. With the DRBIII®, read DTCs and record the related Freeze Frame data. Is the Good Trip Counter displayed and equal to zero? Yes → Go To 2 No → Refer to the INTERMITTENT CONDITION symptom in the Driveability category. Perform POWERTRAIN VERIFICATION TEST VER - 5 - NGC.	All
2	Turn the ignition off. With the DRBIII® lab scope probe and the Miller special tool #6801, backprobe the (K44) CMP Signal circuit in the CMP harness connector. **WARNING: WHEN THE ENGINE IS OPERATING, DO NOT STAND IN A DIRECT LINE WITH THE FAN. DO NOT PUT YOUR HANDS NEAR THE PULLEYS, BELTS OR FAN. DO NOT WEAR LOOSE CLOTHING.** Ignition on, engine not running. Observe the lab scope screen. Start the engine. Observe the lab scope screen. Are there any irregular or missing signals? Yes → Go To 3 No → Go To 8	All

P0344-CAMSHAFT POSITION SENSOR INTERMITTENT — Continued

TEST	ACTION	APPLICABILITY
3	Visually inspect the related wire harness including the ground circuit. Look for any chafed, pierced, pinched, or partially broken wires. Visually inspect the related wire harness connectors. Look for broken, bent, pushed out, or corroded terminals. Ensure the Crankshaft Position Sensor and the Camshaft Position Sensor are properly installed and the mounting bolt(s) are tight. Refer to any TSBs that may apply. Were any of the above conditions present? Yes → Repair as necessary. Perform POWERTRAIN VERIFICATION TEST VER - 5 - NGC. No → Go To 4	All
4	Turn the ignition off. Disconnect the CMP Sensor connector. Ignition on, engine not running. Measure the voltage on the (K6) 5 Volt Supply circuit. Is the voltage between 4.5 and 5.5 volts? Yes → Go To 5 No → Repair the open or short to ground in the (K6) 5 Volt Supply circuit. Use Miller special tool #8815 when checking for an open circuit to prevent PCM harness connector terminal damage. Perform POWERTRAIN VERIFICATION TEST VER - 5 - NGC.	All
5	Turn the ignition off. Carefully disconnect the Battery (-) Ground cable. Remove the Camshaft Position Sensor. Inspect the Tone Wheel/Pulse Ring for damage, foreign material, or excessive movement. Were any problems found? Yes → Repair or replace the Tone Wheel/Pulse Ring as necessary. Perform POWERTRAIN VERIFICATION TEST VER - 5 - NGC. No → Go To 6	All
6	**NOTE: An intermittent glitch in the Crankshaft Position Sensor can cause the P0344 to set.** Turn the ignition off. With the DRBIII® lab scope probe and the Miller special tool #6801, backprobe the (K24) CKP Signal circuit in the CKP Sensor harness connector. **WARNING: WHEN THE ENGINE IS OPERATING, DO NOT STAND IN A DIRECT LINE WITH THE FAN. DO NOT PUT YOUR HANDS NEAR THE PULLEYS, BELTS OR FAN. DO NOT WEAR LOOSE CLOTHING.** Ignition on, engine not running. Wiggle the related wire harness and lightly tap on the Crank Position Sensor. Observe the lab scope screen. Start the engine. Observe the lab scope screen. Are there any irregular or missing signals? Yes → Repair as necessary. Perform POWERTRAIN VERIFICATION TEST VER - 5 - NGC. No → Go To 7	All

P0344-CAMSHAFT POSITION SENSOR INTERMITTENT — Continued

TEST	ACTION	APPLICABILITY
7	If there are no possible causes remaining, view repair. Repair Replace the Camshaft Position Sensor. Perform POWERTRAIN VERIFICATION TEST VER - 5 - NGC.	All
8	Turn the ignition off. Disconnect the CMP Sensor connector. Disconnect the PCM connector. **CAUTION: DO NOT PROBE THE PCM HARNESS CONNECTORS. PROBING THE PCM HARNESS CONNECTORS WILL DAMAGE THE PCM TERMINALS RESULTING IN POOR TERMINAL TO PIN CONNECTION. INSTALL MILLER SPECIAL TOOL #8815 TO PERFORM DIAGNOSIS.** Measure the resistance in the (K44) CMP Signal circuit from the CMP harness connector to the appropriate terminal of special tool #8815. Wiggle the related wire harness while taking this measurement. Is the resistance below 5.0 ohms? Yes → Go To 9 No → Repair the open/high resistance in the (K44) CMP Signal circuit. Perform POWERTRAIN VERIFICATION TEST VER - 5 - NGC.	All
9	Turn the ignition off. Disconnect the PCM connector. Disconnect the CMP Sensor connector. Measure the resistance between ground and the (K44) CMP Signal circuit in the CMP Sensor harness connector. Wiggle the related wire harness while monitoring the resistance value. Does the resistance stay below 100 ohms? Yes → Repair the short to ground in the (K44) CMP Signal circuit. Perform POWERTRAIN VERIFICATION TEST VER - 5 - NGC. No → Go To 10	All
10	Turn the ignition off. Disconnect the CMP Sensor connector. Ignition on, engine not running. Measure the voltage on the (K44) CMP Signal circuit. Wiggle the related wire harness while taking this measurement. Does the voltage ever increase above 5.5 volts? Yes → Repair the short to B+ voltage in the (K44) CMP Signal circuit. Perform POWERTRAIN VERIFICATION TEST VER - 5 - NGC. No → Go To 11	All
11	Turn the ignition off. Disconnect the PCM harness connector. Disconnect the CMP harness connector. Measure the resistance between the (K6) 5 Volt Supply circuit and the signal circuit in the CMP harness connector. Wiggle the related wire harness while taking this measurement. Is the resistance below 5.0 ohms? Yes → Repair the short to the (K6) 5 Volt Supply circuit in the (K44) CMP Signal circuit. Perform POWERTRAIN VERIFICATION TEST VER - 5 - NGC. No → Go To 12	All

P0344-CAMSHAFT POSITION SENSOR INTERMITTENT — Continued

TEST	ACTION	APPLICABILITY
12	**NOTE: Before continuing, check the PCM harness connector terminals for corrosion, damage, or terminal push out. Repair as necessary.** If there are no possible causes remaining, view repair. Repair Replace and program the Powertrain Control Module in accordance with the Service Information. Perform POWERTRAIN VERIFICATION TEST VER - 5 - NGC.	All

Symptom:

P0401 - EGR SYSTEM PERFORMANCE

When Monitored and Set Condition:

P0401 - EGR SYSTEM PERFORMANCE

When Monitored: Engine running for greater than two minutes with the Engine Coolant Temp greater than 70°C (158°F). EGR active. Less than 8500 feet. Ambient temperature greater than 20°F (-6°C)

Set Condition: The PCM closes the EGR valve while monitoring the O2 Sensor signal. Once a closed EGR fueling sample has been established the PCM then ramps in EGR and additional fueling while monitoring the O2 Sensor signal in the open state. A fueling sample is again established. The PCM then compares the two different O2 Sensor signal reading (fueling samples). If a larger than expected variation is detected, a soft failure is recorded. Three soft failures set a one trip failure. After two failed trips, a DTC is set and the MIL is illuminated.

POSSIBLE CAUSES
GOOD TRIP EQUAL TO ZERO
EGR VALVE OPEN AT IDLE
EGR VALVE ASSEMBLY INSPECTION
EGR SOLENOID ASSEMBLY
EGR SOLENOID GROUND CIRCUIT OPEN
EGR SOLENOID CONTROL CKT SHORT TO GND
EGR SOLENOID CONTROL CKT SHORTED TO VOLTAGE
EGR SOLENOID CONTROL CKT OPEN
PCM - EGR OPEN
PCM - EGR CLOSED

TEST	ACTION	APPLICABILITY
1	Turn the ignition on. With the DRBIII®, read DTCs and record the related Freeze Frame data. Is the Good Trip displayed and equal to zero? Yes → Go To 2 No → Refer to the INTERMITTENT CONDITION symptom in the Driveability category. Perform POWERTRAIN VERIFICATION TEST VER - 5.	All

P0401 - EGR SYSTEM PERFORMANCE — Continued

TEST	ACTION	APPLICABILITY
2	**NOTE: If the vehicle is running rough at idle (DRBIII® not actuating) follow the yes path to continue.** Turn the ignition on. Turn all accessories off. Start the engine. Allow the engine to reach normal operating temperature. With the DRBIII®, enter Engine System Test, then EGR System Test. Monitor the MAP Sensor voltage on the DRBIII® while actuating the FLOW function in the EGR System Test. **NOTE: When the EGR valve is commanded open the MAP sensor voltage will shift with the induced vacuum leak.** Was there a MAP sensor voltage shift when the EGR valve was opened? Yes → Go To 3 No → Go To 7	All
3	Turn the ignition off. Disconnect the EGR Solenoid Assembly harness connector. Start engine. Attempt to allow the engine to idle. Does the engine run rough or stall? Yes → Inspect the EGR tube assembly. If OK, replace the EGR valve. Perform POWERTRAIN VERIFICATION TEST VER - 5. No → Go To 4	All
4	Inspect the EGR Assembly for the following. Gasket(s) for leaking Damage and/or holes in the EGR tube(s) Carbon build up on or near the EGR pintle and passage ways. Obstruction in the EGR tubes Were any problem found? Yes → Repair or replace the EGR Assembly as necessary. Perform POWERTRAIN VERIFICATION TEST VER - 5. No → Go To 5	All
5	Turn the ignition off. Disconnect the EGR Solenoid harness connector. Turn the ignition on. Measure the voltage on the EGR Solenoid Control circuit in the EGR Solenoid connector. Is the voltage above 1.0 volt? Yes → Repair the short to voltage in the EGR solenoid control circuit. Perform POWERTRAIN VERIFICATION TEST VER - 5. No → Go To 6	All
6	**NOTE: Before continuing, check the PCM harness connector terminals for corrosion, damage, or terminal push out. Repair as necessary.** If there are no possible causes remaining, view repair. Repair Replace and program the Powertrain Control Module in accordance with the Service Information. Perform POWERTRAIN VERIFICATION TEST VER - 5.	All

P0401 - EGR SYSTEM PERFORMANCE — Continued

TEST	ACTION	APPLICABILITY
7	Turn the ignition on. Turn all accessories off. Disconnect the EGR Solenoid harness connector. Using a 12-volt Test Light, jumper across the EGR Solenoid harness connector. With the DRB, actuate the EGR solenoid. Does the 12-volt test light flash on and off? Yes → Inspect the tube(s) for obstructions and damage, repair as necessary. If OK, replace the EGR Solenoid Assembly. Perform POWERTRAIN VERIFICATION TEST VER - 5. No → Go To 8	All
8	Turn the ignition off. Disconnect the EGR Solenoid harness connector. Using a 12-volt test light connected to battery voltage, probe the EGR Solenoid ground circuit in the EGR Solenoid harness connector. Does the 12-volt test light illuminate brightly? Yes → Go To 9 No → Repair the open in the EGR Solenoid ground circuit. Perform POWERTRAIN VERIFICATION TEST VER - 5.	All
9	Turn the ignition off. Disconnect the PCM harness connector. Disconnect the EGR Solenoid harness connector. Measure the resistance between ground and the EGR Solenoid Control circuit at the EGR Solenoid harness connector. Is the resistance below 100 ohms? Yes → Repair the short to ground in the EGR Solenoid Control circuirt. Perform POWERTRAIN VERIFICATION TEST VER - 5. No → Go To 10	All
10	Turn the ignition off. Disconnect the PCM harness connector. Disconnect the EGR Solenoid harness connector. **CAUTION: DO NOT PROBE THE PCM HARNESS CONNECTORS. PROBING THE PCM HARNESS CONNECTORS WILL DAMAGE THE PCM TERMINALS RESULTING IN POOR TERMINAL TO PIN CONNECTION. INSTALL MILLER SPECIAL TOOL #8815 TO PERFORM DIAGNOSIS.** Measure the resistance of the EGR Solenoid Control circuit from the EGR Solenoid harness connector to the appropriate terminal of special tool # 8815. Is the resistance below 5.0 ohms? Yes → Go To 11 No → Repair the open in the EGR solenoid control circuit. Perform POWERTRAIN VERIFICATION TEST VER - 5.	All
11	**NOTE: Before continuing, check the PCM harness connector terminals for corrosion, damage, or terminal push out. Repair as necessary.** If there are no possible causes remaining, view repair. Repair Replace and program the Powertrain Control Module in accordance with the Service Information. Perform POWERTRAIN VERIFICATION TEST VER - 5.	All

Symptom:

P0403 - EGR CONTROL CIRCUIT

When Monitored and Set Condition:

P0403 - EGR CONTROL CIRCUIT

When Monitored: Engine running. Battery voltage greater than 10 volts.

Set Condition: The EGR solenoid control circuit is not in the expected state when requested to operate by the PCM. One Trip Fault.

POSSIBLE CAUSES
GOOD TRIP EQUAL TO ZERO
EGR SOLENOID ASSEMBLY
EGR SOLENOID GROUND CIRCUIT OPEN
EGR SOLENOID CONTROL CIRCUIT SHORTED TO VOLTAGE
EGR SOLENOID CONTROL CIRCUIT SHORT TO GND
EGR SOLENOID CONTROL CIRCUIT SHORTED TO SENSOR GROUND CIRCUIT
EGR SOLENOID CONTROL CIRCUIT OPEN
PCM

TEST	ACTION	APPLICABILITY
1	Ignition on, engine not running. With the DRBIII®, read DTCs and record the related Freeze Frame data. Is the Good Trip displayed and equal to zero? Yes → Go To 2 No → Refer to the INTERMITTENT CONDITION symptom in the Driveability category. Perform POWERTRAIN VERIFICATION TEST VER - 5.	All
2	Turn the ignition off. Disconnect the EGR Solenoid harness connector. Turn the ignition on. Turn all accessories off. Using a 12 volt Test Light connected to the EGR Solenoid ground circuit, probe the EGR Solenoid Control circuit. With the DRB, actuate the EGR solenoid. Does the 12-volt test light flash on and off? Yes → Replace the EGR Solenoid Assembly. Perform POWERTRAIN VERIFICATION TEST VER - 5. No → Go To 3	All

P0403 - EGR CONTROL CIRCUIT — Continued

TEST	ACTION	APPLICABILITY
3	Turn the ignition off. Disconnect the EGR Solenoid harness connector. Disconnect the PCM harness connector. Using a 12-volt Test Light connected to the EGR Solenoid ground circuit, probe the EGR Solenoid Control circuit in the EGR Solenoid harness connector. Does the test light illuminate? Yes → Go To 4 No → Repair the open in the EGR Solenoid ground circuit. Perform POWERTRAIN VERIFICATION TEST VER - 5.	All
4	Turn the ignition off. Disconnect the EGR Solenoid harness connector. Disconnect the PCM harness connector. Turn the ignition on. Measure the voltage on the EGR Solenoid Control circuit in the EGR Solenoid connector. Is the voltage above 1.0 volt? Yes → Repair the short to voltage in the EGR Solenoid Control circuit. Perform POWERTRAIN VERIFICATION TEST VER - 5. No → Go To 5	All
5	Turn the ignition off. Disconnect the PCM harness connector. Disconnect the EGR Solenoid harness connector. Measure the resistance between ground and the EGR Solenoid Control circuit at the EGR Solenoid harness connector. Is the resistance below 100 ohms? Yes → Repair the short to ground in the EGR Solenoid Control circuit. Perform POWERTRAIN VERIFICATION TEST VER - 5. No → Go To 6	All
6	Turn the ignition off. Disconnect the PCM harness connector. Disconnect the EGR Solenoid harness connector. Measure the resistance between the EGR Solenoid Control circuit and Sensor ground circuit at the EGR Solenoid connector. Is the resistance below 5.0 ohms? Yes → Repair the short to Sensor ground in the EGR Solenoid Control circuit. Perform POWERTRAIN VERIFICATION TEST VER - 5. No → Go To 7	All

P0403 - EGR CONTROL CIRCUIT — Continued

TEST	ACTION	APPLICABILITY
7	Turn the ignition off. Disconnect the PCM harness connector. Disconnect the EGR Solenoid harness connector. **CAUTION: DO NOT PROBE THE PCM HARNESS CONNECTORS. PROBING THE PCM HARNESS CONNECTORS WILL DAMAGE THE PCM TERMINALS RESULTING IN POOR TERMINAL TO PIN CONNECTION. INSTALL MILLER SPECIAL TOOL #8815 TO PERFORM DIAGNOSIS.** Measure the resistance of the EGR Solenoid Control circuit from the EGR Solenoid harness connector to the appropriate terminal of special tool #8815. Is the resistance below 5.0 ohms? Yes → Go To 8 No → Repair the open in the EGR Solenoid Control circuit. Perform POWERTRAIN VERIFICATION TEST VER - 5.	All
8	**NOTE: Before continuing, check the PCM harness connector terminals for corrosion, damage, or terminal push out. Repair as necessary.** If there are no possible causes remaining, view repair. Repair Replace and program the Powertrain Control Module in accordance with the Service Information. Perform POWERTRAIN VERIFICATION TEST VER - 5.	All

Symptom:

P0404 - EGR POSITION SENSOR PERFORMANCE

When Monitored and Set Condition:

P0404 - EGR POSITION SENSOR PERFORMANCE

When Monitored:

Set Condition: The EGR flow or valve movement is not what is expected.

POSSIBLE CAUSES
GOOD TRIP EQUAL TO ZERO
HIGH RESISTANCE IN 5 VOLT SUPPLY
EGR SOLENOID CONTROL CKT
INTERMITTENT CONDITION
EGR SENSOR SIGNAL CIRCUIT OPEN
EGR SENSOR SIGNAL CIRCUIT SHORTED TO GROUND
SENSOR GROUND CIRCUIT OPEN
EGR ASSEMBLY (GROUND)
PCM

TEST	ACTION	APPLICABILITY
1	Ignition on, engine not running. With the DRBIII®, read DTCs and record the related Freeze Frame data. Is the Good Trip displayed and equal to zero? Yes → Go To 2 No → Refer to the INTERMITTENT CONDITION symptom in the Driveability category. Perform POWERTRAIN VERIFICATION TEST VER - 5.	All
2	**NOTE: Diagnose all other EGR DTC(s) first before continuing.** Start the engine. With the DRBIII®, read the EGR Position Sensor voltage. Choose a conclusion that best matches the EGR voltage reading. Below 3.5 volts Go To 3 Between 3.5 volts to 4.3 volts Go To 4 Above 4.3 volts Go To 6	All

P0404 - EGR POSITION SENSOR PERFORMANCE — Continued

TEST	ACTION	APPLICABILITY
3	Turn the ignition off. Disconnect the EGR Solenoid harness connector. Disconnect the PCM harness connector. **CAUTION: DO NOT PROBE THE PCM HARNESS CONNECTORS. PROBING THE PCM HARNESS CONNECTORS WILL DAMAGE THE PCM TERMINALS RESULTING IN POOR TERMINAL TO PIN CONNECTION. INSTALL MILLER SPECIAL TOOL #8815 TO PERFORM DIAGNOSIS.** Measure the resistance of the 5 volt supply circuit from the EGR Solenoid harness connector to the appropriate terminal of special tool #8815. Is the resistance below 5.0 ohms? Yes → Go To 4 No → Repair the high resistance in the 5 Volt Supply circuit. Perform POWERTRAIN VERIFICATION TEST VER - 5.	All
4	Turn the ignition on. With the DRBIII®, actuate the EGR Solenoid. Allow the EGR Solenoid to actuate for least 15 seconds. Feel the EGR solenoid for operation. Stop actuation. Does EGR Solenoid operate during actuation test and then turn off when actuation test was stopped? Yes → Go To 5 No → Refer to the Driveability category and perform P0403 - EGR Control Circuit. Perform POWERTRAIN VERIFICATION TEST VER - 5.	All
5	**NOTE: The conditions that set the DTC are not present at this time. The following list may help in identifying the intermittent condition.** **NOTE: Closely inspect the EGR tube(s) for obstructions, damage and holes. Also, inspect the gasket(s) for leaks.** **WARNING: WHEN THE ENGINE IS OPERATING, DO NOT STAND IN A DIRECT LINE WITH THE FAN. DO NOT PUT YOUR HANDS NEAR THE PULLEYS, BELTS OR FAN. DO NOT WEAR LOOSE CLOTHING.** With the engine running at normal operating temperature, monitor the DRBIII® parameters related to the DTC while wiggling the wire harness. Look for parameter values to change and/or a DTC to set. Review the DRBIII® Freeze Frame information. If possible, try to duplicate the conditions under which the DTC was set. Refer to any Technical Service Bulletins (TSB) that may apply. Visually inspect the related wire harness. Look for any chafed, pierced, pinched, or partially broken wires. Visually inspect the related wire harness connectors. Look for broken, bent, pushed out, or corroded terminals. Were any of the above conditions present? Yes → Repair as necessary Perform POWERTRAIN VERIFICATION TEST VER - 5. No → Test Complete.	All

P0404 - EGR POSITION SENSOR PERFORMANCE — Continued

TEST	ACTION	APPLICABILITY
6	Turn the ignition off. Disconnect the EGR Solenoid harness connector. Turn the ignition on. Measure the voltage of the EGR Sensor Signal circuit at the EGR Solenoid harness connector. Is the voltage above 4.30 volts? Yes → Go To 7 No → Go To 8	All
7	Turn the ignition off. Disconnect the EGR Solenoid harness connector. Disconnect the PCM harness connector. **CAUTION: DO NOT PROBE THE PCM HARNESS CONNECTORS. PROBING THE PCM HARNESS CONNECTORS WILL DAMAGE THE PCM TERMINALS RESULTING IN POOR TERMINAL TO PIN CONNECTION. INSTALL MILLER SPECIAL TOOL #8815 TO PERFORM DIAGNOSIS.** Measure the resistance of the Sensor Ground circuit from the EGR Solenoid harness connector to the appropriate terminal of special tool #8815. Is the resistance below 5.0 ohms? Yes → Replace the EGR Assembly. Perform POWERTRAIN VERIFICATION TEST VER - 5. No → Repair the open in the Sensor ground circuit. Perform POWERTRAIN VERIFICATION TEST VER - 5.	All
8	Turn the ignition off. Disconnect the EGR Solenoid harness connector. Disconnect the PCM harness connector. **CAUTION: DO NOT PROBE THE PCM HARNESS CONNECTORS. PROBING THE PCM HARNESS CONNECTORS WILL DAMAGE THE PCM TERMINALS RESULTING IN POOR TERMINAL TO PIN CONNECTION. INSTALL MILLER SPECIAL TOOL #8815 TO PERFORM DIAGNOSIS.** Measure the resistance of the EGR Sensor Signal circuit from the EGR Solenoid harness connector to the appropriate terminal of special tool #8815. Is the resistance below 5.0 ohms? Yes → Go To 9 No → Repair the open in the EGR Sensor Signal circuit. Perform POWERTRAIN VERIFICATION TEST VER - 5.	All
9	Turn the ignition off. Disconnect the EGR Solenoid harness connector. Disconnect the PCM harness connector. Measure the resistance between ground and the EGR Sensor Signal circuit in the EGR Solenoid harness connector. Is the resistance below 100 ohms? Yes → Repair the short to ground in the EGR Sensor Signal circuit. Perform POWERTRAIN VERIFICATION TEST VER - 5. No → Go To 10	All

P0404 - EGR POSITION SENSOR PERFORMANCE — Continued

TEST	ACTION	APPLICABILITY
10	**NOTE: Before continuing, check the PCM harness connector terminals for corrosion, damage, or terminal push out. Repair as necessary.** If there are no possible causes remaining, view repair. Repair Replace and program the Powertrain Control Module in accordance with the Service Information. Perform POWERTRAIN VERIFICATION TEST VER - 5.	All

Symptom:

P0405 - EGR POSITION SENSOR LOW

When Monitored and Set Condition:

P0405 - EGR POSITION SENSOR LOW

When Monitored: With the ignition on. Battery voltage above 10.0 volts.

Set Condition: EGR Position Sensor Signal is less than 0.1026 of a volt. One trip Fault.

POSSIBLE CAUSES
EGR POSITION SENSOR SWEEP
INTERMITTENT CONDITION
5 VOLT SUPPLY CIRCUIT SHORTED TO GROUND
5 VOLT SUPPLY CIRCUIT OPEN
EGR POSITION INTERNAL FAILURE
EGR POSITION SENSOR SIGNAL CIRCUIT SHORTED TO GROUND
EGR POSITION SENSOR SIGNAL CIRCUIT SHORTED TO SENSOR GROUND CIRCUIT
PCM 5 VOLT SUPPLY CIRCUIT
PCM EGR POSITION SENSOR SIGNAL

TEST	ACTION	APPLICABILITY
1	Turn the ignition on. With the DRBIII®, read the EGR Position Sensor voltage. Is the voltage below 0.2 of a volt? Yes → Go To 2 No → Go To 10	All
2	Turn the ignition off. Disconnect the EGR Solenoid harness connector. Turn the ignition on. Measure the voltage of the 5 Volt Supply circuit in the EGR Solenoid harness connector. Is the voltage between 4.5 to 5.2 volts? Yes → Go To 3 No → Go To 7	All
3	Turn the ignition off. Disconnect the EGR Solenoid harness connector. With the DRBIII®, monitor the EGR Position Sensor voltage. Turn the ignition on. Is the voltage above 4.5 volts? Yes → Replace the EGR Solenoid Assembly. Perform POWERTRAIN VERIFICATION TEST VER - 5. No → Go To 4	All

P0405 - EGR POSITION SENSOR LOW — Continued

TEST	ACTION	APPLICABILITY
4	Turn the ignition off. Disconnect the EGR Position harness connector. Disconnect the PCM harness connector. Measure the resistance between ground and the EGR Position Sensor Signal circuit at the EGR Position harness connector. Is the resistance below 100 ohms? Yes → Repair the short to ground circuit in the EGR Position Sensor Signal circuit. Perform POWERTRAIN VERIFICATION TEST VER - 5. No → Go To 5	All
5	Turn the ignition off. Disconnect the EGR Position harness connector. Disconnect the PCM harness connector. Measure the resistance between the EGR Position Sensor Signal circuit and the Sensor ground circuit in the EGR Position harness connector. Is the resistance below 100 ohms? Yes → Repair the short to Sensor ground in the EGR Position Sensor Signal circuit. Perform POWERTRAIN VERIFICATION TEST VER - 5. No → Go To 6	All
6	**NOTE: Before continuing, check the PCM harness connector terminals for corrosion, damage, or terminal push out. Repair as necessary.** If there are no possible causes remaining, view repair. Repair Replace and program the Powertrain Control Module in accordance with the Service Information. Perform POWERTRAIN VERIFICATION TEST VER - 5.	All
7	Turn the ignition off. Disconnect the EGR Solenoid harness connector. Disconnect the PCM harness connector. Measure the resistance between ground and the 5 Volt Supply circuit at the EGR Solenoid harness connector. Is the resistance below 100 ohms? Yes → Repair the short to ground in the 5 Volt Supply circuit. Perform POWERTRAIN VERIFICATION TEST VER - 5. No → Go To 8	All
8	Turn the ignition off. Disconnect the EGR Solenoid harness connector. Disconnect the PCM harness connector. **CAUTION: DO NOT PROBE THE PCM HARNESS CONNECTORS. PROBING THE PCM HARNESS CONNECTORS WILL DAMAGE THE PCM TERMINALS RESULTING IN POOR TERMINAL TO PIN CONNECTION. INSTALL MILLER SPECIAL TOOL #8815 TO PERFORM DIAGNOSIS.** Measure the resistance of the 5 Volt Supply circuit from the EGR Solenoid harness connector to the appropriate terminal of special tool #8815. Is the resistance below 5.0 ohms? Yes → Go To 9 No → Repair the open in the 5 Volt Supply circuit. Perform POWERTRAIN VERIFICATION TEST VER - 5.	All

P0405 - EGR POSITION SENSOR LOW — Continued

TEST	ACTION	APPLICABILITY
9	**NOTE: Before continuing, check the PCM harness connector terminals for corrosion, damage, or terminal push out. Repair as necessary.** If there are no possible causes remaining, view repair. Repair Replace and program the Powertrain Control Module in accordance with the Service Information. Perform POWERTRAIN VERIFICATION TEST VER - 5.	All
10	**NOTE: The engine will run rough and possibly stall in the following test. Feather the accelerator pedal to keep the engine from stalling.** Start the engine. With the DRBIII®, enter Engine System Test and then EGR System Test. Push the 4=VARIABLE function. Monitor the EGR voltage while slowly pushing the up arrow. Is the voltage change smooth? Yes → Test Complete. No → Replace the EGR Solenoid Assembly. Perform POWERTRAIN VERIFICATION TEST VER - 5.	All

Symptom:

P0406 - EGR POSITION SENSOR HIGH

When Monitored and Set Condition:

P0406 - EGR POSITION SENSOR HIGH

When Monitored: With the ignition on. Battery voltage greater than 10 volts.

Set Condition: EGR position sensor signal is greater than 4.89. One trip Fault.

POSSIBLE CAUSES
EGR POSITION SENSOR SIGNAL CIRCUIT OPEN
EGR POSITION SENSOR SWEEP
INTERMITTENT CONDITION
EGR POSITION SENSOR SIGNAL CIRCUIT SHORTED TO 5 VOLT SUPPLY CIRCUIT
EGR POSITION SENSOR SIGNAL CIRCUIT SHORTED TO BATTERY VOLTAGE
EGR SOLENOID ASSEMBLY INTERNAL FAILURE
SENSOR GROUND CIRCUIT OPEN
PCM

TEST	ACTION	APPLICABILITY
1	Start the engine. With the DRBIII®, read the EGR Position Sensor voltage. Is the voltage above 4.5 volts? Yes → Go To 2 No → Go To 8	All
2	Turn the ignition off. Disconnect the EGR Solenoid harness connector. Disconnect the PCM harness connector. Measure the resistance between the EGR Position Sensor Signal circuit and the 5 Volt Supply circuit in the EGR Solenoid harness connector. Is the resistance below 100 ohms? Yes → Repair the EGR Position Sensor Signal circuit for a short to the 5 Volt Supply circuit. Perform POWERTRAIN VERIFICATION TEST VER - 5. No → Go To 3	All

P0406 - EGR POSITION SENSOR HIGH — Continued

TEST	ACTION	APPLICABILITY
3	Turn the ignition off. Disconnect the EGR Solenoid harness connector. Disconnect the PCM harness connector. **CAUTION: DO NOT PROBE THE PCM HARNESS CONNECTORS. PROBING THE PCM HARNESS CONNECTORS WILL DAMAGE THE PCM TERMINALS RESULTING IN POOR TERMINAL TO PIN CONNECTION. INSTALL MILLER SPECIAL TOOL #8815 TO PERFORM DIAGNOSIS.** Measure the resistance of the EGR Position Sensor Signal circuit from the EGR Solenoid harness connector to the appropriate terminal of special tool #8815. Is the resistance below 5.0 ohms? Yes → Go To 4 No → Repair the open in the EGR Position Sensor Signal circuit. Perform POWERTRAIN VERIFICATION TEST VER - 5.	All
4	Turn the ignition off. Disconnect the EGR Solenoid harness connector. Turn the ignition on. Measure the voltage of the EGR Sensor Signal circuit in the EGR Position Sensor harness connector. Is the voltage above 5.2 volts? Yes → Repair the short to battery voltage in the EGR Position Sensor Signal circuit. Perform POWERTRAIN VERIFICATION TEST VER - 5. No → Go To 5	All
5	Turn the ignition off. Disconnect the EGR Solenoid harness connector. Connect a jumper wire between the EGR Position Sensor Signal circuit and the Sensor ground circuit. With the DRBIII®, monitor the EGR Position Sensor voltage. Turn the ignition on. Is the voltage below 0.5 of a volt? Yes → Replace the EGR Solenoid Assembly. Perform POWERTRAIN VERIFICATION TEST VER - 5. No → Go To 6	All
6	Turn the ignition off. Disconnect the EGR Solenoid harness connector. Disconnect the PCM harness connector. **CAUTION: DO NOT PROBE THE PCM HARNESS CONNECTORS. PROBING THE PCM HARNESS CONNECTORS WILL DAMAGE THE PCM TERMINALS RESULTING IN POOR TERMINAL TO PIN CONNECTION. INSTALL MILLER SPECIAL TOOL #8815 TO PERFORM DIAGNOSIS.** Measure the resistance of the Sensor ground circuit from the EGR Solenoid harness connector to the appropriate terminal of special tool #8815. Is the resistance below 30 ohms? Yes → Go To 7 No → Repair the open in the Sensor ground circuit. Perform POWERTRAIN VERIFICATION TEST VER - 5.	All

P0406 - EGR POSITION SENSOR HIGH — Continued

TEST	ACTION	APPLICABILITY
7	**NOTE: Before continuing, check the PCM harness connector terminals for corrosion, damage, or terminal push out. Repair as necessary.** If there are no possible causes remaining, view repair. Repair Replace and program the Powertrain Control Module in accordance with the Service Information. Perform POWERTRAIN VERIFICATION TEST VER - 5.	All
8	**NOTE: The engine will run rough and possibly stall in the following test. Feather the accelerator pedal to keep the engine from stalling.** Start the engine. With the DRBIII®, enter Engine System Test and then EGR System Test. Push the 4=VARIABLE function. Monitor the EGR voltage while slowly pushing the up arrow. Is the voltage change smooth? Yes → Refer to the INTERMITTENT CONDITION symptom in the Driveability category. Perform POWERTRAIN VERIFICATION TEST VER - 5. No → Replace the EGR Solenoid Assembly. Perform POWERTRAIN VERIFICATION TEST VER - 5.	All

Symptom List:

P0420-CATALYTIC 1/1 EFFICIENCY
P0432-CATALYTIC 2/1 EFFICIENCY

Test Note: All symptoms listed above are diagnosed using the same tests. The title for the tests will be P0420-CATALYTIC 1/1 EFFICIENCY.

When Monitored and Set Condition:

P0420-CATALYTIC 1/1 EFFICIENCY

When Monitored: Engine Run time greater than 90 seconds. Engine Coolant greater than 70°C (158°F) Vehicle speed greater than 20 MPH and less than 55 MPH. Engine Speed greater than 1216 RPM and less than 1952 RPM.

Set Condition: As catalyst efficiency deteriorates, the switch rate of the downstream O2 sensor approaches that of the upstream O2 sensor. If at any point during the test the switch ratio reaches a predetermined value a counter is incremented by one. One Trip Fault.

P0432-CATALYTIC 2/1 EFFICIENCY

When Monitored: Engine Run time greater than 90 seconds. Engine Coolant greater than 70°C (158°F) Vehicle speed greater than 20 MPH and less than 55 MPH. Engine Speed greater than 1216 RPM and less than 1952 RPM.

Set Condition: As catalyst efficiency deteriorates, the switch rate of the downstream O2 sensor approaches that of the upstream O2 sensor. If at any point during the test the switch ratio reaches a predetermined value a counter is incremented by one. One Trip Fault.

POSSIBLE CAUSES
GOOD TRIP EQUAL TO ZERO
VISUALLY INSPECT CATALYTIC CONVERTER
EXHAUST LEAK
ENGINE MECHANICAL CONDITION
AGING O2 SENSOR
CATALYTIC CONVERTER

P0420-CATALYTIC 1/1 EFFICIENCY — Continued

TEST	ACTION	APPLICABILITY
1	**NOTE: A new rear O2 Sensor along with an aging front O2 Sensor may cause the DTC to set. Review the repair history of the vehicle before continuing.** **NOTE: If an O2 Sensor or Fuel System Lean DTC(s) is set along with the Catalytic Converter Efficiency DTC, diagnose the O2 Sensor DTC(s) before continuing.** **NOTE: Check for contaminates that may have damaged the O2 Sensor and Catalytic Converter: contaminated fuel, unapproved silicone, oil and coolant, repair necessary.** Ignition on, engine not running. With the DRBIII®, read DTCs and record the related Freeze Frame data. Is the Good Trip Counter displayed and equal to zero? Yes → Go To 2 No → Refer to the INTERMITTENT CONDITION symptom in the Driveability category. Perform POWERTRAIN VERIFICATION TEST VER - 5 - NGC.	All
2	Inspect the Catalytic Converter for the following damage. Damaged Catalytic Converter, dent and holes. Severe discoloration caused by overheating the Catalytic Converter. Catalytic Converter broke internally. Leaking Catalytic Converter. Were any problems found? Yes → Replace the Catalytic Converter. Repair the condition that may have caused the failure. Perform POWERTRAIN VERIFICATION TEST VER - 5 - NGC. No → Go To 3	All
3	Start the engine. Inspect the exhaust for leaks between the engine and the O2 Sensor. Inspect the exhaust for leaks between the engine and the appropriate rear O2 Sensor. Are there any exhaust leaks? Yes → Repair or replace the leaking exhaust parts as necessary. Perform POWERTRAIN VERIFICATION TEST VER - 5 - NGC. No → Go To 4	All
4	Check the exhaust for excessive smoke caused by an internal problem in the engine. Is a engine mechanical condition present? Yes → Repair the engine mechanical condition as necessary. Perform POWERTRAIN VERIFICATION TEST VER - 5 - NGC. No → Go To 5	All
5	A new rear O2 Sensor along with an aging front O2 Sensor may cause the DTC to set. Review the vehicles repair history. Has the rear O2 Sensor been replaced without replacing the front O2 Sensor? Yes → Replace the Front O2 Sensor as necessary. Perform POWERTRAIN VERIFICATION TEST VER - 5 - NGC. No → Go To 6	All
6	If there are no possible causes remaining, view repair. Repair Replace the Catalytic Converter. Perform POWERTRAIN VERIFICATION TEST VER - 5 - NGC.	All

Symptom:

P0440-GENERAL EVAP SYSTEM FAILURE

When Monitored and Set Condition:

P0440-GENERAL EVAP SYSTEM FAILURE

When Monitored: Engine Running. Fuel Level greater than 12%. Ambient Temperature between 4°C and 32°C (39°F and 89°F)

Set Condition: The PCM does not see the NVLD switch close during the medium/large leak test. The PCM will then increase the vacuum supply to the EVAP system by increasing flow through the EVAP Purge valve. If the switch does not close with an increase in vacuum, an error is detected. Two Trip Fault.

POSSIBLE CAUSES
GOOD TRIP EQUAL TO ZERO
VISUAL AND PHYSICAL INSPECTION
EVAP PURGE SOLENOID VACUUM SUPPLY INSPECTION
EVAP PURGE SOLENOID STUCK CLOSED
NVLD SWITCH OPERATION
(Z1) GROUND CIRCUIT OPEN
NVLD ASSEMBLY
(K107) NVLD SWITCH SIGNAL CIRCUIT OPEN
EVAPORATIVE EMISSION LEAK DETECTION
PCM

TEST	ACTION	APPLICABILITY
1	**NOTE: If any of the following DTCs are set (P0443, P0452, P0453, P0498 or P0499) diagnose them first before continuing with P0440.** Ignition on, engine not running. With the DRBIII®, read DTCs and record the related Freeze Frame data. Is the Good Trip Counter displayed and equal to zero? Yes → Go To 2 No → Refer to the INTERMITTENT CONDITION symptom in the Driveability category. Perform POWERTRAIN VERIFICATION TEST VER - 5 - NGC.	All

P0440-GENERAL EVAP SYSTEM FAILURE — Continued

TEST	ACTION	APPLICABILITY
2	Perform a visual and physical inspection of the entire Evaporative Emission system. Check for the following conditions: - Hoses disconnected or left off - Holes or cracks - Loose seal points - Evidence of damaged components - Incorrect routing of hoses and tubes - Fuel Cap left off or bad gasket seal Were any of the above conditions found? Yes → Repair as necessary. Perform POWERTRAIN VERIFICATION TEST VER - 5 - NGC. No → Go To 3	All
3	Turn the ignition off. Carefully inspect the Evap Purge Solenoid vacuum supply hose for proper routing. Check for a pinched or plugged hose from the throttle body to the Purge Solenoid. Ensure the vacuum port at the throttle body is free from any blockage. Were any problems found? Yes → Repair the vacuum supply, hose/tube as necessary. Perform POWERTRAIN VERIFICATION TEST VER - 5 - NGC. No → Go To 4	All
4	Disconnect the vacuum supply hoses form the EVAP Purge Solenoid. Using a hand vacuum pump, apply 10 in Hg to the ″CAN″ side of the EVAP Purge Solenoid. Ignition on, engine not running. Observe the vacuum gauge. With the DRBIII®, actuate the EVAP Purge Solenoid . Does the vacuum drop when the solenoid is actuated? Yes → Go To 5 No → Replace the Evap Purge Solenoid. Perform POWERTRAIN VERIFICATION TEST VER - 5 - NGC.	All
5	Reconnect all vacuum hoses. Start the engine and allow it to idle. Using the DRBIII®, perform the NVLD FORCED MONITOR TEST. Monitor the NVLD Switch state. **NOTE: As the test runs, the NVLD Switch should go from an OPEN state to CLOSED. After the vacuum is released from the EVAP system the Switch state will return to OPEN.** Did the NVLD Switch operate as described above? Yes → Refer to the INTERMITTENT CONDITION symptom in the Driveability category. Perform POWERTRAIN VERIFICATION TEST VER - 5 - NGC. No → Go To 6	All

P0440-GENERAL EVAP SYSTEM FAILURE — Continued

TEST	ACTION	APPLICABILITY
6	To continue testing you will need Miller Tool #8404 Evaporative Emission Leak Detector (EELD). **WARNING: Keep lit cigarettes, sparks, flames, and other ignition sources away from the test area to prevent the ignition of explosive gases. Keep the test area well ventilated.** **NOTE: The fuel tank should have between 20% and 80% of fuel tank capacity to properly test the Evap system.** Connect the red power lead of EELD to the battery positive terminal and the black ground lead to battery negative terminal. **NOTE: See Charts and Graph support material EELD Calibration Setup for an example.** Block the vent hose of the EVAP Canister. Connect shop air to the EELD. Set the smoke/air control switch to AIR. Insert the tester's AIR supply tip (clear hose) into the .040 orifice on the tester's control panel. Press the remote smoke/air start button. Position the red flag on the air flow meter so it is aligned with the indicator ball. When the calibration is complete, release the remote button. The EELD is now calibrated the flow meter in liters per minute. Install the service port adapter #8404-14 on the vehicle's service port (if equipped) or install the #8404-ADP service adapter in the NVLD filter line. Connect the Air supply hose from the EELD to the service port. Press the remote button to activate AIR flow. **NOTE: Larger volume fuel tanks, lower fuel levels or if the vehicle is equipped with a Flow Management Valve, this may indicate high flow and will require 4 to 5 minutes to fill.** Compare the flow meter indicator ball reading to the red flag. ABOVE the red flag indicates a leak present. BELOW the red flag indicates a sealed system. Is the indicator ball above the red flag? Yes → Go To 7 No → Go To 8	All

P0440-GENERAL EVAP SYSTEM FAILURE — Continued

TEST	ACTION	APPLICABILITY
7	**NOTE: A thorough visual inspection of the Evap system hoses, tubes, and connections may save time in your diagnosis. Look for any physical damage or signs of wetness at connections. The strong smell of fuel vapors may aid diagnosis also.** To continue testing, you will need Miller Tool #8404 Evaporative Emissions Leak Detector (EELD). Remove the Air supply hose from the service port. Connect the SMOKE supply tip (black hose) to the service port. Set the smoke/air control switch to SMOKE. **NOTE: The flow meter indicator ball will not move at this point.** Press the remote smoke/air start button. **NOTE: Ensure that smoke has filled the EVAP system by continuing to press the remote smoke/air start button, remove the vehicle fuel cap, and wait for the smoke to exit. Once smoke is indicated reinstall the fuel cap.** **NOTE: For optimal performance, introduce smoke into the system for an additional 60 seconds; continue introducing smoke at 15 second intervals, as necessary.** While still holding the remote smoke/air start button, use the white light (#8404-CLL) to follow the EVAP system path, and look for the source of the leak indicated by exiting smoke. If a leak is concealed from view (i.e., top of fuel tank), release the remote smoke/air start button, and use the ultraviolet (UV) black light #8404-UVL and the yellow goggles 8404-20 to look for residual traces of dye that are left behind by the smoke. The exiting smoke deposits a residual fluid that is either bright green or bright yellow in color when viewed with a UV light. **NOTE: Carefully inspect the vent side of the EVAP Canister. Due to the filtering system in the canister the smoke or dye may or may not be visual. Introducing smoke into the filtered side of the canister may assist in locating the leak.** Was a leak found? Yes → Repair or replace the leaking component as necessary. Perform POWERTRAIN VERIFICATION TEST VER - 6 - NGC. No → NOTE: Before continuing, check the PCM harness connector terminals for corrosion, damage or terminal push out. Repair as necessary. Replace and program the Powertrain Control Module in accordance with the Service Information. Perform POWERTRAIN VERIFICATION TEST VER - 5 - NGC.	All
8	Turn the ignition off. Disconnect the NVLD electrical harness connector. Check connectors - Clean/repair as necessary. Using a jumper wire, jumper across the (K107) NVLD Switch Sense circuit and the (Z1) Ground circuit in the NVLD electrical harness connector. Monitor the NVLD Switch state on the DRBIII®. Does the Switch change from OPEN to CLOSED. Yes → Replace the NVLD Assembly. Perform POWERTRAIN VERIFICATION TEST VER - 5 - NGC. No → Go To 9	All

P0440-GENERAL EVAP SYSTEM FAILURE — Continued

TEST	ACTION	APPLICABILITY
9	Turn the ignition off. Disconnect the NVLD electrical harness connector. Measure the resistance between the (Z1) Ground circuit and ground. Is the resistance below 5.0 ohms? Yes → Go To 10 No → Repair the open in the (Z1) Ground circuit. Perform POWERTRAIN VERIFICATION TEST VER - 5 - NGC.	All
10	Turn the ignition off. Disconnect the NVLD electrical harness connector. Disconnect the PCM harness connector. **CAUTION: DO NOT PROBE THE PCM HARNESS CONNECTORS. PROBING THE PCM HARNESS CONNECTORS WILL DAMAGE THE PCM TERMINALS RESULTING IN POOR TERMINAL TO PIN CONNECTION. INSTALL MILLER SPECIAL TOOL #8815 TO PERFORM DIAGNOSIS.** Measure the resistance of the (K107) NVLD Switch Signal circuit from the NVLD electrical harness connector to the appropriate terminal of the special tool #8815. Is the resistance below 5.0 ohms? Yes → NOTE: Before continuing, check the PCM harness connector terminals for corrosion, damage or terminal push out. Repair as necessary. Replace and program the Powertrain Control Module in accordance with the Service Information. Perform POWERTRAIN VERIFICATION TEST VER - 5 - NGC. No → Repair the open in the (K107) NVLD Switch Signal Circuit. Perform POWERTRAIN VERIFICATION TEST VER - 5 - NGC.	All

Symptom:

P0441-EVAP PURGE SYSTEM PERFORMANCE

When Monitored and Set Condition:

P0441-EVAP PURGE SYSTEM PERFORMANCE

When Monitored: Cold start test. Engine Running. Small Leak Test Passed.

Set Condition: The PCM activates the EVAP Purge solenoid and gradually increases to maximum flow. During flow, the PCM looks for the NVLD switch to close. If the PCM does not see the NVLD switch close at maximum flow an error is detected. Two Trip Fault.

POSSIBLE CAUSES
GOOD TRIP EQUAL TO ZERO
INTERMITTENT CONDITION
CHECKING EVAP PURGE SOLENOID FUNCTIONALITY
EVAP PURGE SOLENOID VACUUM SUPPLY

TEST	ACTION	APPLICABILITY
1	**NOTE: If any of the following DTCs are set (P0443, P0452, P0453, P0498 or P0499) diagnose them first before continuing with P0441.** Ignition on, engine not running. With the DRBIII®, read DTCs and record the related Freeze Frame data. Is the Good Trip Counter displayed and equal to zero? Yes → Go To 2 No → Refer to the INTERMITTENT CONDITION symptom in the Driveability category. Perform POWERTRAIN VERIFICATION TEST VER - 5 - NGC.	All
2	**NOTE: After disconnecting the Evap Purge vacuum connections, inspect the lines and solenoid for any signs of contamination or foreign materials.** Using a hand vacuum pump, apply 10 in Hg to ″CAN″ side of the EVAP Purge Solenoid. Ignition on, engine not running. Observe the vacuum gauge. With the DRBIII®, actuate the EVAP Purge Solenoid . Does the vacuum drop when the solenoid is actuated? Yes → Go To 3 No → Replace the Evap Purge Solenoid. Perform POWERTRAIN VERIFICATION TEST VER - 5 - NGC.	All

P0441-EVAP PURGE SYSTEM PERFORMANCE — Continued

TEST	ACTION	APPLICABILITY
3	Turn the ignition off. Carefully inspect the Evap Purge Solenoid vacuum supply hose for proper routing. Check for a pinched or plugged hose from the throttle body to the Purge Solenoid. Inspect the vacuum port at the throttle body for any damage or plugging. Were any problems found? Yes → Repair the vacuum supply hose/tube as necessary. Perform POWERTRAIN VERIFICATION TEST VER - 5 - NGC. No → Refer to the INTERMITTENT CONDITION symptom in the Driveability category. Perform POWERTRAIN VERIFICATION TEST VER - 5 - NGC.	All

Symptom List:

P0442-EVAP SYSTEM MEDIUM LEAK
P0455-EVAP SYSTEM LARGE LEAK

Test Note: All symptoms listed above are diagnosed using the same tests. The title for the tests will be P0442-EVAP SYSTEM MEDIUM LEAK.

When Monitored and Set Condition:

P0442-EVAP SYSTEM MEDIUM LEAK

When Monitored: Engine Running. Cold start test. Fuel Level greater than 12%. Ambient Temperature between 4°C and 32°C (39°F and 89°F) Close Loop fuel system. Test runs when small leak test is maturing.

Set Condition: The PCM activates the EVAP Purge Solenoid to pull the EVAP system into a vacuum to close the NVLD swtich. Once the NVLD swtich is closed, the PCM turns the EVAP Pugre solenoid off to seal the EVAP system. If the NVLD switch reopens before the calibrated amount of time for a Medium leak an error is detected. Two Trip Fault.

P0455-EVAP SYSTEM LARGE LEAK

When Monitored: Engine Running. Cold start test. Fuel Level greater than 12%. Ambient Temperature between 4°C and 32°C (39°F and 89°F) Close Loop fuel system. Test runs when small leak test is maturing.

Set Condition: The PCM activates the EVAP Purge Solenoid to pull the EVAP system into a vacuum to close the NVLD swtich. Once the NVLD switch is closed, the PCM turns the EVAP Purge solenoid off to seal the EVAP system. If the NVLD switch reopens before the calibrated amount of time for a Large leak an error is detected. Two Trip Fault.

POSSIBLE CAUSES
INTERMITTENT CONDITION
VISUAL AND PHYSICAL INSPECTION
EVAPORATIVE EMISSION LEAK DETECTION
EVAP PURGE SOLENOID OPERATION
NVLD SWITCH OPERATION

P0442-EVAP SYSTEM MEDIUM LEAK — Continued

TEST	ACTION	APPLICABILITY
1	**NOTE: Since a hot vehicle can conceal a leak, it is best to perform this test at room temperature.** **NOTE: A loose gas cap could have caused this DTC to set. Make sure gas cap is tight and in good condition. Ensure the gas cap meets OEM specifications.** Ignition on, engine not running. With the DRBIII®, read DTCs and record the related Freeze Frame data. Is the Good Trip Counter displayed and equal to zero? Yes → Go To 2 No → Go To 7	All
2	Perform a visual and physical inspection of the entire Evaporative Emission system. Check for the follow conditions: - Holes or cracks - Loose seal points - Evidence of damaged components - Incorrect routing of hoses and tubes - Fuel Cap gasket seal Were any of the above conditions found? Yes → Repair as necessary. Perform POWERTRAIN VERIFICATION TEST VER - 6 - NGC. No → Go To 3	All

P0442-EVAP SYSTEM MEDIUM LEAK — Continued

TEST	ACTION	APPLICABILITY
3	To continue testing you will need Miller Tool #8404 Evaporative Emission Leak Detector (EELD). **WARNING: Keep lighted cigarettes, sparks, flames, and other ignition sources away from the test area to prevent the ignition of explosive gases. Keep the test area well ventilated.** **NOTE: The fuel tank should have between 20% and 80% of fuel tank capacity to properly test the Evap system.** Connect the red power lead of the EELD to the battery positive terminal and the black ground lead to battery negative terminal. **NOTE: See Charts and Graph support material EELD Calibration Setup for an example.** Block the vent hose of the EVAP Canister. Connect shop air to the EELD. Set the smoke/air control switch to AIR. Insert the tester's AIR supply tip (clear hose) into the appropriate calibration orifice on the tester's control panel (based on DTC leak size). Press the remote smoke/air start button. Position the red flag on the air flow meter so it is aligned with the indicator ball. When the calibration is complete, release the remote button. The EELD is now calibrated the flow meter in liters per minute to the size leak indicated by the DTC set in the PCM. Install the service port adapter #8404-14 on the vehicle's service port (if equipped) or install the #8404-ADP service adapter in the NVLD filter line. Connect the Air supply hose from the EELD to the service port. Press the remote button to activate AIR flow. **NOTE: Larger volume fuel tanks, lower fuel levels or if the vehicle is equipped with a Flow Management Valve may indicate high flow and will require 4 to 5 minutes to fill** Compare the flow meter indicator ball reading to the red flag. ABOVE the red flag indicates a leak present. BELOW the red flag indicates a sealed system. Is the indicator ball above the red flag? Yes → Go To 4 No → Go To 7	All

P0442-EVAP SYSTEM MEDIUM LEAK — Continued

TEST	ACTION	APPLICABILITY
4	**NOTE: A thorough visual inspection of the Evap system hoses, tubes, and connections may save time in your diagnosis. Look for any physical damage or signs of wetness at connections. The strong smell of fuel vapors may aid diagnosis also.** To continue testing, you will need Miller Tool #8404 Evaporative Emissions Leak Detector (EELD). Remove the Air supply hose from the service port. Connect the SMOKE supply tip (black hose) to the service port. Set the smoke/air control switch to SMOKE. **NOTE: The flow meter indicator ball will not move in the smoke mode.** Press the remote smoke/air start button. **NOTE: Ensure that smoke has filled the EVAP system by continuing to press the remote smoke/air start button, remove the vehicle fuel cap, and wait for the smoke to exit. Once smoke is indicated reinstall the fuel cap.** **NOTE: For optimal performance, introduce smoke into the system for an additional 60 seconds; continue introducing smoke at 15 second intervals, as necessary.** While still holding the remote smoke/air start button, use the white light (#8404-CLL) to follow the EVAP system path, and look for the source of the leak indicated by exiting smoke. If a leak is concealed from view (i.e., top of fuel tank), release the remote smoke/air start button, and use the ultraviolet (UV) black light #8404-UVL and the yellow goggles 8404-20 to look for residual traces of dye that is left behind by the smoke. The exiting smoke deposits a residual fluid that is either bright green or bright yellow in color when viewed with a UV light. **NOTE: Carefully inspect the vent side of the EVAP Canister. Due to the filtering system in the canister the smoke may not be as thick. Introducing smoke into the filtered side of the canister may assist in locating the leak.** Was a leak found? Yes → Repair or replace the leaking component as necessary. Perform POWERTRAIN VERIFICATION TEST VER - 6 - NGC. No → Go To 5	All
5	**NOTE: After disconnecting the Evap Purge Solenoid vacuum connections, inspect the lines and solenoid for any signs of contamination from the EVAP Canister. This may indicate a faulty rollover valve. Replace/repair as necessary.** Turn the ignition off. Disconnect the vacuum hoses at the Evap Purge Solenoid. Using a hand vacuum pump, apply 10 in Hg to the ″CAN″ of the EVAP Purge Solenoid. **NOTE: Monitor the vacuum gauge for at least 15 seconds.** Does the EVAP Purge Solenoid hold vacuum? Yes → Go To 6 No → Replace the Evap Purge Solenoid. Perform POWERTRAIN VERIFICATION TEST VER - 6 - NGC.	All

P0442-EVAP SYSTEM MEDIUM LEAK — Continued

TEST	ACTION	APPLICABILITY
6	Reconnect all vacuum hoses. Start the engine. Allow the engine to idle. Using the DRBIII®, perform the NVLD FORCED MONITOR TEST. Monitor the NVLD Switch. **As the test runs, the NVLD Switch should go from an OPEN state to CLOSED. After the vacuum is released form the EVAP system the Switch state will return to OPEN.** Did the NVLD Switch operate as described above? Yes → Go To 7 No → Replace the NVLD Assembly. Perform POWERTRAIN VERIFICATION TEST VER - 6 - NGC.	All
7	**WARNING: WHEN THE ENGINE IS OPERATING, DO NOT STAND IN A DIRECT LINE WITH THE FAN. DO NOT PUT YOUR HANDS NEAR THE PULLEYS, BELTS OR FAN. DO NOT WEAR LOOSE CLOTHING.** Review the DRBIII® Freeze Frame information. If possible, try to duplicate the conditions under which the DTC was set. Refer to any Technical Service Bulletins (TSB) that may apply. **NOTE: A loose gas cap could have caused this DTC to set. Make sure gas cap is tight and in good condition. Ensure the gas cap meets OEM specifications.** Perform a visual and physical inspection of the entire Evaporative Emission system. Check for the following conditions: - Holes or cracks - Loose seal points - Evidence of damaged components - Incorrect routing of hoses and tubes - Fuel Cap gasket seal Were any of the above conditions found? Yes → Repair as necessary. Perform POWERTRAIN VERIFICATION TEST VER - 6 - NGC. No → Test Complete.	All

Symptom:

P0443-EVAP PURGE SOLENOID CIRCUIT

When Monitored and Set Condition:

P0443-EVAP PURGE SOLENOID CIRCUIT

When Monitored: The ignition on or engine running. Battery voltage greater than 10 volts.

Set Condition: The PCM will set a trouble code if the actual state of the solenoid does not match the intended state.

POSSIBLE CAUSES
GOOD TRIP EQUAL TO ZERO
EVAP PURGE SOLENOID OPERATION
(K52) EVAP PURGE SOL CONTROL CIRCUIT OPEN
(K52) EVAP PURGE SOLENOID CONTROL CIRCUIT SHORTED TO GROUND
(K108) EVAP PURGE SOL RETURN CIRCUIT OPEN
(K108) EVAP PURGE SOL RETURN CIRCUIT SHORTED TO GROUND
POWERTRAIN CONTROL MODULE

TEST	ACTION	APPLICABILITY
1	Ignition on, engine not running. With the DRBIII®, read DTCs and record the related Freeze Frame data. Is the Good Trip Counter displayed and equal to zero? Yes → Go To 2 No → Refer to the INTERMITTENT CONDITION symptom in the Driveability category. Perform POWERTRAIN VERIFICATION TEST VER - 5 - NGC.	All
2	Turn the ignition off. Disconnect the EVAP Purge Solenoid harness connector. Ignition on, engine not running. Using a 12-volt test light, jumper across the EVAP Purge Solenoid harness connector. With the DRBIII®, actuate the EVAP Purge Solenoid. Does the test light flash on and off? Yes → Replace the EVAP Purge Solenoid. Perform POWERTRAIN VERIFICATION TEST VER - 5 - NGC. No → Go To 3	All

P0443-EVAP PURGE SOLENOID CIRCUIT — Continued

TEST	ACTION	APPLICABILITY
3	Turn the ignition off. Disconnect the Evap Purge Solenoid harness connector. Disconnect the PCM harness connectors. **CAUTION: DO NOT PROBE THE PCM HARNESS CONNECTORS. PROBING THE PCM HARNESS CONNECTORS WILL DAMAGE THE PCM TERMINALS RESULTING IN POOR TERMINAL TO PIN CONNECTION. INSTALL MILLER SPECIAL TOOL #8815 TO PERFORM DIAGNOSIS.** Measure the resistance of the (K52) Evap Purge Solenoid Control circuit from the Evap Purge Solenoid harness connector to the appropriate terminal of special tool #8815. Is the resistance below 5.0 ohms? Yes → Go To 4 No → Repair the open in the (K52) Evap Purge Sol Control circuit. Perform POWERTRAIN VERIFICATION TEST VER - 5 - NGC.	All
4	Turn the ignition off. Disconnect the Evap Purge Solenoid harness connector. Disconnect the PCM harness connectors. Measure the resistance between ground and the (K52) Evap Purge Sol Control circuit at the Evap Purge Solenoid harness connector. Is the resistance below 5.0 ohms? Yes → Repair the short to ground in the (K52) Evap Purge Solenoid Control circuit. Perform POWERTRAIN VERIFICATION TEST VER - 5 - NGC. No → Go To 5	All
5	Turn the ignition off. Disconnect the Evap Purge Solenoid harness connector. Disconnect the PCM harness connectors. **CAUTION: DO NOT PROBE THE PCM HARNESS CONNECTORS. PROBING THE PCM HARNESS CONNECTORS WILL DAMAGE THE PCM TERMINALS RESULTING IN POOR TERMINAL TO PIN CONNECTION. INSTALL MILLER SPECIAL TOOL #8815 TO PERFORM DIAGNOSIS.** Measure the resistance of the (K108) Evap Purge Sol Return circuit from the Evap Purge Solenoid harness connector to the appropriate terminal of special tool #8815. Is the resistance below 5.0 ohms? Yes → Go To 6 No → Repair the open in the (K108) Evap Purge Sol Return circuit. Perform POWERTRAIN VERIFICATION TEST VER - 5 - NGC.	All
6	Turn the ignition off. Disconnect the Evap Purge Solenoid harness connector. Disconnect the PCM harness connectors. Measure the resistance between ground and the (K108) Evap Purge Sol Return circuit at the Evap Purge Solenoid harness connector. Is the resistance below 5.0 ohms? Yes → Repair the short to ground in the (K108) Evap Purge Solenoid Return circuit. Perform POWERTRAIN VERIFICATION TEST VER - 5 - NGC. No → Go To 7	All

P0443-EVAP PURGE SOLENOID CIRCUIT — Continued

TEST	ACTION	APPLICABILITY
7	**NOTE: Before continuing, check the PCM harness connector terminals for corrosion, damage, or terminal push out. Repair as necessary.** If there are no possible causes remaining, view repair. Repair Replace and program the Powertrain Control Module in accordance with the Service Information. Perform POWERTRAIN VERIFICATION TEST VER - 5 - NGC.	All

Symptom:

P0452-NVLD PRESSURE SWITCH SENSE CIRCUIT LOW

When Monitored and Set Condition:

P0452-NVLD PRESSURE SWITCH SENSE CIRCUIT LOW

When Monitored: Immediately after engine start up.

Set Condition: The PCM activates the NLVD Solenoid. If PCM does not see NVLD switch open, an error is detected. One Trip Fault.

POSSIBLE CAUSES
GOOD TRIP EQUAL TO ZERO
NVLD SWITCH OPERATION
NVLD ASSEMBLY
(K52) EVAP PURGE SOL CONTROL CIRCUIT SHORTED TO GROUND
(K107) NVLD SWITCH SIGNAL CIRCUIT SHORTED TO GROUND
EVAP PURGE SOLENOID LEAKS/STUCK OPEN
PCM

TEST	ACTION	APPLICABILITY
1	Ignition on, engine not running. With the DRBIII®, read DTCs and record the related Freeze Frame data. Is the Good Trip Counter displayed and equal to zero? Yes → Go To 2 No → Refer to the INTERMITTENT CONDITION symptom in the Driveability category. Perform POWERTRAIN VERIFICATION TEST VER - 5 - NGC.	All
2	Turn the ignition off. Disconnect the EVAP Purge Solenoid harness connector. Ignition on, engine not running. Using a 12-volt test light, jumper across the EVAP Purge Solenoid harness connector. With the DRBIII®, actuate the EVAP Purge Solenoid. Does the test light flash on and off? Yes → Go To 3 No → Go To 7	All

P0452-NVLD PRESSURE SWITCH SENSE CIRCUIT LOW — Continued

TEST	ACTION	APPLICABILITY
3	**NOTE: After disconnecting the Evap Purge Solenoid vacuum connections, inspect the lines and solenoid for any signs of contamination from the EVAP Canister. This may indicate a faulty rollover valve. Replace/repair as necessary.** Turn the ignition off. Disconnect the vacuum hoses at the Evap Purge Solenoid. Using a hand vacuum pump, apply 10 in Hg to the ″CAN″ of the EVAP Purge Solenoid. **NOTE: Monitor the vacuum gauge for at least 15 seconds.** Does the EVAP Purge Solenoid hold vacuum? Yes → Go To 4 No → Replace the Evap Purge Solenoid. Perform POWERTRAIN VERIFICATION TEST VER - 5 - NGC.	All
4	Ignition on, engine not running. Using the DRBIII®, monitor the NVLD Switch State. Does the DRBIII® display the NVLD state OPEN? Yes → Refer to the INTERMITTENT CONDITION symptom in the Driveability category. Perform POWERTRAIN VERIFICATION TEST VER - 5 - NGC. No → Go To 5	All
5	Turn the ignition on. Using the DRBIII®, monitor the NVLD Switch State. Disconnect the NVLD electrical connector. Does the Switch change from CLOSED to OPEN? Yes → Replace the NVLD Assembly. Perform POWERTRAIN VERIFICATION TEST VER - 5 - NGC. No → Go To 6	All
6	Turn the ignition off. Disconnect the NVLD electrical harness connector. Disconnect the PCM harness connector. Measure the resistance between ground and the (K107) NVLD Switch Signal circuit in the NVLD Assembly harness connector. Is the resistance below 5.0 ohms? Yes → Repair the short to ground in the (K107) NVLD Switch Signal circuit. Perform POWERTRAIN VERIFICATION TEST VER - 5 - NGC. No → NOTE: Before continuing, check the PCM harness connector terminals for corrosion, damage or terminal push out. Repair as necessary. Replace and program the Powertrain Control Module in accordance with the Service Information. Perform POWERTRAIN VERIFICATION TEST VER - 5 - NGC.	All

P0452-NVLD PRESSURE SWITCH SENSE CIRCUIT LOW — Continued

TEST	ACTION	APPLICABILITY
7	Turn the ignition off. Disconnect the EVAP Purge Solenoid harness connector. Disconnect the Powertrain Control Module harness connectors. Measure the resistance between ground and the (K52) EVAP Purge Sol Control circuit at the EVAP Purge Solenoid harness connector. Is the resistance below 5.0 ohms? Yes → Repair the short to ground in the (K52) EVAP Purge Sol Control circuit. Perform POWERTRAIN VERIFICATION TEST VER - 5 - NGC. No → NOTE: Before continuing, check the PCM harness connector terminals for corrosion, damage or terminal push out. Repair as necessary. Replace and program the Powertrain Control Module in accordance with the Service Information. Perform POWERTRAIN VERIFICATION TEST VER - 5 - NGC.	All

Symptom:

P0453-NVLD PRESSURE SWITCH SENSE CIRCUIT HIGH

When Monitored and Set Condition:

P0453-NVLD PRESSURE SWITCH SENSE CIRCUIT HIGH

When Monitored: Engine Running.

Set Condition: If the PCM does not see the NVLD swtich close during test an error is detected. One Trip Fault.

POSSIBLE CAUSES
NVLD SWITCH OPERATION
(K107) NVLD SWITCH SIGNAL CIRCUIT SHORTED TO BATTERY VOLTAGE
(K107) NVLD SWITCH SIGNAL CIRCUIT SHORTED TO (K106) NVLD SOL CONTROL CIRCUIT
NVLD ASSEMBLY
(Z1) GROUND CIRCUIT OPEN
(K107) NVLD SWITCH SIGNAL CIRCUIT OPEN
PCM

TEST	ACTION	APPLICABILITY
1	Start the engine. Allow the engine to idle. Using the DRBIII®, perform the NVLD FORCED MONITOR TEST. Monitor the NVLD Switch state. **NOTE: As the test runs, the NVLD Switch should go from an OPEN state to a CLOSED state and then return to OPEN when the test is complete.** Did the NVLD Switch operate as described above? Yes → Refer to the INTERMITTENT CONDITION symptom in the Driveability category. Perform POWERTRAIN VERIFICATION TEST VER - 5 - NGC. No → Go To 2	All
2	Turn the ignition off. Disconnect the NVLD electrical harness connector. Ignition on, engine not running. Measure the voltage on the (K107) NVLD Switch Signal circuit in the NVLD electrical harness connector. Is the voltage above 5.5 volts? Yes → Repair short to battery voltage in the (K107) NVLD Switch Signal circuit. Perform POWERTRAIN VERIFICATION TEST VER - 5 - NGC. No → Go To 3	All

P0453-NVLD PRESSURE SWITCH SENSE CIRCUIT HIGH — Continued

TEST	ACTION	APPLICABILITY
3	Turn the ignition off. Disconnect the NVLD electrical harness connector. Measure the resistance between the (K107) NVLD Switch Signal circuit and (K106) NVLD Sol Control circuit in the NVLD electrical harness connector. Is the resistance below 5.0 ohms? Yes → Repair the (K107) NVLD Switch Signal circuit shorted to the (K106) NVLD Sol Control circuit. Perform POWERTRAIN VERIFICATION TEST VER - 5 - NGC. No → Go To 4	All
4	Turn the ignition off. Disconnect the NVLD electrical harness connector. Using a jumper wire, jumper across the NVLD Switch Signal circuit and the Ground circuit. Monitor the NVLD Switch state on the DRBIII®. Does the Switch change from OPEN to CLOSED? Yes → Replace the NVLD Assembly. Perform POWERTRAIN VERIFICATION TEST VER - 5 - NGC. No → Go To 5	All
5	Turn the ignition off. Disconnect the NVLD electrical harness connector. Measure the resistance between the (Z1) Ground circuit and ground. Is the resistance below 5.0 ohms? Yes → Go To 6 No → Repair the open in the (Z1) Ground circuit. Perform POWERTRAIN VERIFICATION TEST VER - 5 - NGC.	All
6	Turn the ignition off. Disconnect the NVLD electrical harness connector. Disconnect the PCM harness connector. **CAUTION: DO NOT PROBE THE PCM HARNESS CONNECTORS. PROBING THE PCM HARNESS CONNECTORS WILL DAMAGE THE PCM TERMINALS RESULTING IN POOR TERMINAL TO PIN CONNECTION. INSTALL MILLER SPECIAL TOOL #8815 TO PERFORM DIAGNOSIS.** Measure the resistance of the (K107) NVLD Switch Signal circuit from the NVLD electrical harness connector to the appropriate terminal of special tool # 8815. Is the resistance below 5.0 ohms? Yes → NOTE: Before continuing, check the PCM harness connector terminals for corrosion, damage or terminal push out. Repair as necessary. Replace and program the Powertrain Control Module in accordance with the Service Information. Perform POWERTRAIN VERIFICATION TEST VER - 5 - NGC. No → Repair the open in the (K107) NVLD Switch Signal circuit. Perform POWERTRAIN VERIFICATION TEST VER - 5 - NGC.	All

Symptom:

P0456-EVAP SYSTEM SMALL LEAK

When Monitored and Set Condition:

P0456-EVAP SYSTEM SMALL LEAK

When Monitored: Ignition off. Fuel Level less than 88%. Ambient Temperature between 4°C to 43°C (39°F to 109°F)

Set Condition: Due to temperature changes a vacuum is created in the fuel tank and EVAP system. With the EVAP system sealed, the PCM monitors the NVLD switch. If the NVLD switch does not close within a calibrated amount of time an error is detected.

POSSIBLE CAUSES
INTERMITTENT CONDITION
VISUAL AND PHYSICAL INSPECTION
EVAPORATIVE EMISSION LEAK DETECTION

TEST	ACTION	APPLICABILITY
1	**NOTE: The difference in ambient temperature, outside temp VS shop temp, may conceal a leak, it is best to perform this test after the vehicle's temperature has stabilized in the work area.** Ignition on, engine not running. With the DRBIII®, read DTCs and record the related Freeze Frame data. Is the Good Trip Counter displayed and equal to zero? Yes → Go To 2 No → Go To 4	All
2	Perform a visual and physical inspection of the entire Evaporative Emission system. Check for the following conditions: - Holes or cracks - Loose seal points - Evidence of damaged components - Incorrect routing of hoses and tubes - Fuel Cap gasket seal Were any of the above conditions found? Yes → Repair as necessary. Perform POWERTRAIN VERIFICATION TEST VER - 5 - NGC. No → Go To 3	All

P0456-EVAP SYSTEM SMALL LEAK — Continued

TEST	ACTION	APPLICABILITY
3	**NOTE: A thorough visual inspection of the Evap system hoses, tubes, and connections may save time in your diagnosis. Look for any physical damage or signs of wetness at connections. The strong smell of fuel vapors may aid diagnosis also.** Use the Miller Tool #8404 Evaporative Emissions Leak Detector (EELD). Connect the SMOKE supply tip (black hose) to the service port, (if equipped) or install the #8404-ADP service adapter in the NVLD filter line.. Set the smoke/air control switch to SMOKE. Block the vent hose of the EVAP Canister. **NOTE: The flow meter indicator ball will not move at this point.** Press the remote smoke/air start button. **NOTE: Ensure that smoke has filled the EVAP system by continuing to press the remote smoke/air start button, remove the vehicle fuel cap, and wait for the smoke to exit. Once smoke is indicated reinstall the fuel cap.** **NOTE: For optimal performance, introduce smoke into the system for an additional 60 seconds; continue introducing smoke at 15 second intervals, as necessary.** While still holding the remote smoke/air start button, use the white light (#8404-CLL) to follow the EVAP system path, and look for the source of the leak indicated by exiting smoke. If a leak is concealed from view (i.e., top of fuel tank), release the remote smoke/air start button, and use the ultraviolet (UV) black light #8404-UVL and the yellow goggles 8404-20 to look for residual traces of dye that are left behind by the smoke. The exiting smoke deposits a residual fluid that is either bright green or bright yellow in color when viewed with a UV light. **NOTE: Carefully inspect the vent side of the EVAP Canister. Due to the filtering system in the canister the smoke or dye may or may not be visual. Introducing smoke into the filtered side of the canister may assist in locating the leak.** Was a leak found? Yes → Repair or replace the leaking component as necessary. Perform POWERTRAIN VERIFICATION TEST VER - 5 - NGC. No → Go To 4	All
4	**WARNING: WHEN THE ENGINE IS OPERATING, DO NOT STAND IN A DIRECT LINE WITH THE FAN. DO NOT PUT YOUR HANDS NEAR THE PULLEYS, BELTS OR FAN. DO NOT WEAR LOOSE CLOTHING.** Review the DRBIII® Freeze Frame information. If possible, try to duplicate the conditions under which the DTC was set. Refer to any Technical Service Bulletins (TSB) that may apply. **NOTE: A loose gas cap could have caused this DTC to set. Make sure gas cap is tight and in good condition. Ensure the gas cap meets OEM specifications.** Perform a visual and physical inspection of the entire Evaporative Emission system. Check for the following conditions: - Holes or cracks - Loose seal points - Evidence of damaged components - Incorrect routing of hoses and tubes - Fuel Cap gasket seal Were any of the above conditions found? Yes → Repair as necessary. Perform POWERTRAIN VERIFICATION TEST VER - 5 - NGC. No → Test Complete.	All

Symptom:

P0461-FUEL LEVEL SENSOR #1 PERFORMANCE

When Monitored and Set Condition:

P0461-FUEL LEVEL SENSOR #1 PERFORMANCE

When Monitored: TEST #1: With the ignition on, the fuel level is compared to the previous key down after a 20 second delay. TEST #2: The PCM monitors the fuel level at ignition on.

Set Condition: TEST #1: If the PCM does not see a difference in fuel level of greater than 0.1 volt the test will fail. TEST #2: If the PCM does not see a change in the fuel level of .1765 over a set amount of miles the test will fail. Two Trip Fault.

POSSIBLE CAUSES
GOOD TRIP EQUAL TO ZERO
VISUALLY INSPECT FUEL TANK
(G4) FUEL LEVEL SIGNAL CIRCUIT SHORTED TO GROUND
(G4) FUEL LEVEL SIGNAL CIRCUIT OPEN
(Z2) GROUND CIRCUIT OPEN
INTERNAL INSPECTION OF THE FUEL TANK
FUEL LEVEL SENSOR

TEST	ACTION	APPLICABILITY
1	**NOTE: Diagnose P0462 or P0463 first, if set along with P0461.** **NOTE: Inspect the Fuel Pump Module harness connector for any corrosion or damage.** Ignition on, engine not running. With the DRBIII®, read DTCs and record the related Freeze Frame data. Is the Good Trip Counter displayed and equal to zero? Yes → Go To 2 No → Refer to the INTERMITTENT CONDITION symptom in the Driveability category. Perform POWERTRAIN VERIFICATION TEST VER - 5 - NGC.	All
2	Visually inspect the Fuel Tank for damage that may restrict the Fuel Sending Unit float from moving. Is the Fuel Tank OK? Yes → Go To 3 No → Replace the Fuel Tank as necessary. Perform POWERTRAIN VERIFICATION TEST VER - 5 - NGC.	All

P0461-FUEL LEVEL SENSOR #1 PERFORMANCE — Continued

TEST	ACTION	APPLICABILITY
3	Turn the ignition off. Disconnect the Fuel Pump Module harness connector. Measure the resistance between ground and the (G4) Fuel Level Signal circuit at the Fuel Pump Module harness connector. Is the resistance below 100 ohms? Yes → Repair the short to ground in the (G4) Fuel Level Signal circuit. Perform POWERTRAIN VERIFICATION TEST VER - 5 - NGC. No → Go To 4	All
4	Turn the ignition off. Disconnect the Fuel Pump Module harness connector. Disconnect the Instrument Cluster harness connector. Measure the resistance of the (G4) Fuel Level Signal circuit from the Fuel Pump Module harness connector to the BCM harness connector. Is the resistance below 5.0 ohms? Yes → Go To 5 No → Repair the open in the (G4) Fuel Level Signal circuit. Perform POWERTRAIN VERIFICATION TEST VER - 5 - NGC.	All
5	Turn the ignition off. Disconnect the Fuel Pump Module harness connector. Measure the resistance of the (Z2) Ground circuit from the Fuel Pump Module harness connector to ground. Is the resistance below 5.0 ohms? Yes → Go To 6 No → Repair the open in the (Z2) Ground circuit. Perform POWERTRAIN VERIFICATION TEST VER - 5 - NGC.	All
6	**WARNING: The fuel system is under a constant pressure even with the engine off. Before opening the fuel system the fuel pressure must be release. Relieve the fuel pressure in accordance with the service information.** Remove the Fuel Tank in accordance with the Service Information. Remove the Fuel Pump Module. Visually inspect the inside of the Fuel Tank for any obstructions or deformities. Inspect the Fuel Pump Module Float arm for damage. Were any problems found? Yes → Repair or replace as necessary. Perform POWERTRAIN VERIFICATION TEST VER - 5 - NGC. No → Go To 7	All
7	If there are no possible causes remaining, view repair. Repair Replace the Fuel Level Sensor. Perform POWERTRAIN VERIFICATION TEST VER - 5 - NGC.	All

Symptom List:

P0462-FUEL LEVEL SENSOR #1 LOW
P0463-FUEL LEVEL SENSOR #1 HIGH

Test Note: All symptoms listed above are diagnosed using the same tests. The title for the tests will be P0462-FUEL LEVEL SENSOR #1 LOW.

When Monitored and Set Condition:

P0462-FUEL LEVEL SENSOR #1 LOW

When Monitored: Ignition on and battery voltage above 10.4 volts.

Set Condition: The fuel level sensor signal voltage goes below 0.1961 volts for more than 5 seconds. One Trip Fault.

P0463-FUEL LEVEL SENSOR #1 HIGH

When Monitored: Ignition on and battery voltage above 10.4 volts.

Set Condition: The fuel level sensor signal voltage at the PCM goes above 4.7 volts for more than 5 seconds. One Trip Fault.

POSSIBLE CAUSES
GOOD TRIP EQUAL TO ZERO
INTERMITTENT CONDITION

TEST	ACTION	APPLICABILITY
1	Turn the ignition on. With the DRBIII®, read DTC's. Is the Good Trip displayed and equal to zero? Yes → Refer to the Instrument Cluster Category and perform the appropriate symptoms. Perform POWERTRAIN VERIFICATION TEST VER - 5 - NGC. No → Refer to the INTERMITTENT CONDITION symptom in the Driveability category. Perform POWERTRAIN VERIFICATION TEST VER - 5 - NGC.	All

Symptom:

P0480-LOW SPEED FAN CONTROL RELAY CIRCUIT

When Monitored and Set Condition:

P0480-LOW SPEED FAN CONTROL RELAY CIRCUIT

When Monitored: With the ignition on. Battery voltage greater than 10 volts.

Set Condition: An open or shorted circuit is detected in the radiator fan relay control circuit. One Trip Fault.

POSSIBLE CAUSES
RADIATOR FAN RELAY INTERMITTENT OPERATION
INTERMITTENT CONDITION
GROUND CIRCUIT
FUSED B+ OUTPUT CIRCUIT
POWERTRAIN CONTROL MODULE
RADIATOR FAN RELAY CONTROL CIRCUIT SHORT TO GROUND
RADIATOR FAN RELAY CONTROL CIRCUIT OPEN (IPM)
RADIATOR FAN RELAY CONTROL CIRCUIT OPEN (PCM)
RADIATOR FAN RELAY CONTROL CIRCUIT SHORTED TO GROUND (IPM)
RADIATOR FAN RELAY CONTROL CIRCUIT SHORT TO GROUND (PCM)
INTEGRATED POWER MODULE (OPEN)
INTEGRATED POWER MODULE (SHORD)

TEST	ACTION	APPLICABILITY
1	Turn the ignition on. With the DRBIII®, actuate the Radiator Fan Relay. Are both Radiator Fan operating? Yes → Go To 2 No → Go To 3	All
2	Turn the ignition on. With the DRBIII®, actuate the Radiator Fan Relay. Wiggle the wiring harness from the Radiator Fan Relay to the PCM while the relay is actuating. Did the Radiator Fan Relay stop when wiggling the wiring harness? Yes → Repair as necessary. Perform POWERTRAIN VERIFICATION TEST VER - 5. No → Refer to the INTERMITTENT CONDITION symptom in the Driveability category. Perform POWERTRAIN VERIFICATION TEST VER - 5.	All

P0480-LOW SPEED FAN CONTROL RELAY CIRCUIT — Continued

TEST	ACTION	APPLICABILITY
3	Turn the ignition off. Disconnect the Radiator Fan Relay harness connector. Using a 12-volt test light connected to 12-volts, probe the Ground circuit in the Radiator Fan Relay harness connector. Does the test light illuminate? Yes → Go To 4 No → Repair the Ground circuit for an open. Perform POWERTRAIN VERIFICATION TEST VER - 5.	All
4	**NOTE: Inspect the Radiator Fan fuse located in the IPM.** Turn the ignition off. Disconnect the Radiator Fan Relay harness connector. Measure the voltage of the Fused B+ Output circuit in the Radiator Fan harness connector. Is the voltage above 11.0 volts? Yes → Go To 5 No → Repair the Fused B+ circuit. Check and replace any open fuses. Perform POWERTRAIN VERIFICATION TEST VER - 5.	All
5	**NOTE: Ensure the Radiator Fan Relay harness connector is connected.** Turn the ignition off. Disconnect the PCM harness connector. Turn the ignition on. **CAUTION: DO NOT PROBE THE PCM HARNESS CONNECTORS. PROBING THE PCM HARNESS CONNECTORS WILL DAMAGE THE PCM TERMINALS RESULTING IN POOR TERMINAL TO PIN CONNECTION. INSTALL MILLER SPECIAL TOOL #8815 TO PERFORM DIAGNOSIS.** Using a jumper wire, momentarily jumper the Radiator Fan Relay Control circuit in the appropriate terminal of special tool # 8815 to ground. Did the Radiator Fans operate? Yes → Before continuing, check the PCM harness connector terminals for corrosion, damage, or terminal push out. Repair as necessary. Replace and program the Powertrain Control Module in accordance with the Service Information. Perform POWERTRAIN VERIFICATION TEST VER - 5. No → Go To 6	All
6	Turn the ignition off. Disconnect the Radiator Fan Relay harness connector. Disconnect the PCM harness connector. **CAUTION: DO NOT PROBE THE PCM HARNESS CONNECTORS. PROBING THE PCM HARNESS CONNECTORS WILL DAMAGE THE PCM TERMINALS RESULTING IN POOR TERMINAL TO PIN CONNECTION. INSTALL MILLER SPECIAL TOOL #8815 TO PERFORM DIAGNOSIS.** Measure the resistance of the Radiator Fan Relay Control circuit between the Radiator Fan Relay harness connector and the appropriate terminal of special tool # 8815. Is the resistance below 5.0 ohms? Yes → Go To 7 No → Go To 10	All

P0480-LOW SPEED FAN CONTROL RELAY CIRCUIT — Continued

TEST	ACTION	APPLICABILITY
7	Turn the ignition off. Disconnect the Radiator Fan Relay harness connector. Disconnect the PCM harness connector. Measure the resistance of the Radiator Fan Relay Control circuit in the Radiator Fan Relay harness connector to ground. Is the resistance below 5.0 ohms? Yes → Go To 8 No → Replace Radiator Fan Relay. Perform POWERTRAIN VERIFICATION TEST VER - 5.	All
8	Turn the ignition off. Disconnect the Radiator Fan Relay harness connector. Disconnect the IPM C2 harness connector. Measure the resistance of the Radiator Fan Relay Control circuit in the Radiator Fan Relay harness connector to ground. Is the resistance below 5.0 ohms? Yes → Repair the Radiator Fan Relay Control circuit for a short to ground between the Radiator Fan Relay harness connector and the IPM harness connector. Perform POWERTRAIN VERIFICATION TEST VER - 5. No → Go To 9	All
9	Turn the ignition off. Disconnect the PCM harness connector. Disconnect the IPM C3 harness connector. Measure the resistance of the Radiator Fan Relay Control circuit in the PCM harness connector to ground. Is the resistance below 5.0 ohms? Yes → Repair the Radiator Fan Relay Control circuit for a short to ground between PCM harness connector and the IPM harness connector. Perform POWERTRAIN VERIFICATION TEST VER - 5. No → Replace the IPM Fuse & Relay Center. Perform POWERTRAIN VERIFICATION TEST VER - 5.	All
10	Turn the ignition off. Disconnect the Radiator Fan Relay harness connector. Disconnect the IPM C2 harness connector. Measure the resistance of the Radiator Fan Relay Control circuit between the IPM harness connector and the Radiator Fan Relay harness connector. Is the resistance below 5.0 ohms. Yes → Go To 11 No → Repair the Radiator Fan Relay Control circuit for an open between the Radiator Fan Relay harness connector and the IPM harness connector. Perform POWERTRAIN VERIFICATION TEST VER - 5.	All

P0480-LOW SPEED FAN CONTROL RELAY CIRCUIT — Continued

TEST	ACTION	APPLICABILITY
11	Turn the ignition off. Disconnect the PCM harness connector. Disconnect the IPM C3 harness connector. Measure the resistance of the Radiator Fan Relay Control circuit between the IPM harness connector and the PCM harness connector. Is the resistance below 5.0 ohms. Yes → Replace the IPM Fuse & Relay Center. Perform POWERTRAIN VERIFICATION TEST VER - 5. No → Repair the Radiator Fan Relay Control circuit for an open between PCM harness connector and the IPM harness connector. Perform POWERTRAIN VERIFICATION TEST VER - 5.	All

Symptom:

P0498-NVLD CANISTER VENT VALVE SOLENOID CIRCUIT LOW

When Monitored and Set Condition:

P0498-NVLD CANISTER VENT VALVE SOLENOID CIRCUIT LOW

When Monitored: Engine Running.

Set Condition: The PCM detects a short in the NVLD Canister vent solenoid circuits. One trip Fault.

POSSIBLE CAUSES
GOOD TRIP EQUAL TO ZERO
NVLD SOLENOID
(K106) NVLD SOLENOID CONTROL CIRCUIT SHORT TO GROUND
PCM

TEST	ACTION	APPLICABILITY
1	Ignition on, engine not running. With the DRBIII®, read DTCs and record the related Freeze Frame data. Is the Good Trip Counter displayed and equal to zero? Yes → Go To 2 No → Refer to the INTERMITTENT CONDITION symptom in the Driveability category. Perform POWERTRAIN VERIFICATION TEST VER - 5 - NGC.	All
2	Turn the ignition off. Disconnect the NVLD electrical harness connector. Measure the resistance of the NVLD Solenoid coil. Is the resistance between 7.5 to 8.5 ohms? Yes → Go To 3 No → Replace the NVLD Assembly. Perform POWERTRAIN VERIFICATION TEST VER - 5 - NGC.	All
3	Turn the ignition off. Disconnect the NVLD electrical harness connector. Disconnect the PCM harness connector. Measure the resistance between ground and the (K106) NVLD Sol Control circuit at the NVLD electrical harness connector. Is the resistance below 5.0 ohms? Yes → Repair the short to ground in the (K106) NVLD Solenoid Control circuit. Perform POWERTRAIN VERIFICATION TEST VER - 5 - NGC. No → NOTE: Before continuing, check the PCM harness connector terminals for corrosion, damage or terminal push out. Repair as necessary. Replace and program the Powertrain Control Module in accordance with the Service Information. Perform POWERTRAIN VERIFICATION TEST VER - 5 - NGC.	All

Symptom:

P0499-NVLD CANISTER VENT VALVE SOLENOID CIRCUIT HIGH

When Monitored and Set Condition:

P0499-NVLD CANISTER VENT VALVE SOLENOID CIRCUIT HIGH

When Monitored: Engine Running.

Set Condition: The PCM detects an open in the NVLD Canister vent solenoid circuits. One trip Fault.

POSSIBLE CAUSES
GOOD TRIP EQUAL TO ZERO
NVLD SOLENOID
(K106) NVLD SOL CONTROL CIRCUIT SHORT TO BATTERY VOLTAGE
(K106) NVLD SOL CONTROL CIRCUIT OPEN
(Z1) GROUND CIRCUIT OPEN
PCM

TEST	ACTION	APPLICABILITY
1	Ignition on, engine not running. With the DRBIII®, read DTCs and record the related Freeze Frame data. Is the Good Trip Counter displayed and equal to zero? Yes → Go To 2 No → Refer to the INTERMITTENT CONDITION symptom in the Driveability category. Perform POWERTRAIN VERIFICATION TEST VER - 5 - NGC.	All
2	Turn the ignition off. Disconnect the NVLD Assembly harness connector. Measure the resistance of the NVLD Solenoid coil. Is the resistance between 7.5 to 8.5 ohms? Yes → Go To 3 No → Replace the NVLD Assembly. Perform POWERTRAIN VERIFICATION TEST VER - 5 - NGC.	All

P0499-NVLD CANISTER VENT VALVE SOLENOID CIRCUIT HIGH — Continued

TEST	ACTION	APPLICABILITY
3	Turn the ignition off. Disconnect the NVLD Assembly harness connector. Disconnect the PCM harness connector. Turn the ignition on. Measure the voltage on the (K106) NVLD Sol Control circuit in the NVLD Assembly harness connector. Is the voltage above 1.0 volt? Yes → Repair the short to battery voltage in the (K106) NVLD Sol Control circuit. Perform POWERTRAIN VERIFICATION TEST VER - 5 - NGC. No → Go To 4	All
4	Turn the ignition off. Disconnect the NVLD Assembly harness connector. Disconnect the PCM harness connector. **CAUTION: DO NOT PROBE THE PCM HARNESS CONNECTORS. PROBING THE PCM HARNESS CONNECTORS WILL DAMAGE THE PCM TERMINALS RESULTING IN POOR TERMINAL TO PIN CONNECTION. INSTALL MILLER SPECIAL TOOL #8815 TO PERFORM DIAGNOSIS.** Measure the resistance of the (K106) NVLD Sol Control circuit from the NVLD Assembly harness connector to the appropriate terminal of special tool #8815. Is the resistance below 5.0 ohms? Yes → Go To 5 No → Repair the open in the (K106) NVLD Sol Control circuit. Perform POWERTRAIN VERIFICATION TEST VER - 5 - NGC.	All
5	Turn the ignition off. Disconnect the NVLD Assembly harness connector. Measure the resistance between the (Z1) Ground circuit and ground. Is the resistance below 5.0 ohms? Yes → Go To 6 No → Repair the open in the (Z1) Ground circuit. Perform POWERTRAIN VERIFICATION TEST VER - 5 - NGC.	All
6	**NOTE: Before continuing, check the PCM harness connector terminals for corrosion, damage, or terminal push out. Repair as necessary.** If there are no possible causes remaining, view repair. Repair Replace and program the Powertrain Control Module in accordance with the Service Information. Perform POWERTRAIN VERIFICATION TEST VER - 5 - NGC.	All

Symptom:

P0501-VEHICLE SPEED SENSOR #1 PERFORMANCE (AUTO TRANS)

When Monitored and Set Condition:

P0501-VEHICLE SPEED SENSOR #1 PERFORMANCE (AUTO TRANS)

When Monitored: Engine running. Transmission not in park or neutral. Brakes not applied. Engine run time greater than 10 seconds.

Set Condition: The PCM does not see vehicle speed signal from the transmission control side of the PCM. Two Trip Fault.

POSSIBLE CAUSES
GOOD TRIP EQUAL TO ZERO
TRANSMISSION DTC(S)
PCM

TEST	ACTION	APPLICABILITY
1	**NOTE: Ensure that the Pinion Factor has been programmed and the correct tire size has been programmed in before continuing.** Ignition on, engine not running. With the DRBIII®, read PCM DTCs and record the related Freeze Frame data. Is the Good Trip displayed and equal to zero? Yes → Go To 2 No → Refer to the INTERMITTENT CONDITION symptom in the Driveability category. Perform POWERTRAIN VERIFICATION TEST VER - 5 - NGC.	All
2	Turn the ignition on. With the DRBIII®, check the Transmission DTCs. Are there any Transmission DTCs present? Yes → Refer to the appropriate Transmission DTC in the Transmission category. Perform POWERTRAIN VERIFICATION TEST VER - 5 - NGC. No → NOTE: Before continuing, check the PCM harness connector terminals for corrosion, damage, or terminal push out. Repair as necessary. Replace and program the Powertrain Module in accordance with the Service Information. Perform POWERTRAIN VERIFICATION TEST VER - 5 - NGC.	All

Symptom:

P0501-VEHICLE SPEED SENSOR #1 PERFORMANCE (MANUAL TRANS)

When Monitored and Set Condition:

P0501-VEHICLE SPEED SENSOR #1 PERFORMANCE (MANUAL TRANS)

When Monitored: With the engine running. Clutch not depressed. Engine rpm greater than 1500.

Set Condition: The PCM does not receive a vehicle speed sensor signal for more than 11 seconds. 2 consecutive trips.

POSSIBLE CAUSES
VEHICLE SPEED SENSOR OPERATION
(K7) 5 VOLT SUPPLY CIRCUIT OPEN
(G7) VSS SIGNAL CIRCUIT SHORTED TO GROUND
(G7) VSS SIGNAL CIRCUIT OPEN
PCM VSS SIGNAL
(K4) SENSOR GROUND CIRCUIT OPEN
VEHICLE SPEED SENSOR

TEST	ACTION	APPLICABILITY
1	Raise the drive wheels off the ground. **WARNING: BE SURE TO KEEP HANDS AND FEET CLEAR OF ROTATING WHEELS.** Start the engine. With the DRBIII®, monitor the Vehicle Speed Sensor Place the transmission in any forward gear. Allow the wheels to rotate. Does the DRBIII® display vehicle speed above 0 MPH/KMH? Yes → Refer to the INTERMITTENT CONDITION symptom in the Driveability category. Perform POWERTRAIN VERIFICATION TEST VER - 5 - NGC. No → Go To 2	All
2	Turn the ignition off. Disconnect the Vehicle Speed Sensor harness connector. Turn the ignition on. Measure the voltage of the (K7) 5 Volt Supply circuit in the VSS harness connector. Is the voltage above 4.6 volts? Yes → Go To 3 No → Repair the (K7) 5 Volt Supply circuit for an open. Perform POWERTRAIN VERIFICATION TEST VER - 5 - NGC.	All

P0501-VEHICLE SPEED SENSOR #1 PERFORMANCE (MANUAL TRANS)

— Continued

TEST	ACTION	APPLICABILITY
3	Turn the ignition off. Disconnect the Vehicle Speed Sensor harness connector. Turn the ignition on. Measure the voltage of the (G7) VSS Signal circuit in the VSS harness connector. Is the voltage between 4.5 to 5.0 volts? Yes → Go To 4 No → Go To 5	All
4	Turn the ignition off. Disconnect the Vehicle Speed Sensor harness connector. Measure the resistance of the (K4) Sensor ground circuit between the VSS harness connector and ground. Is the resistance below 5.0 ohms? Yes → Remove and inspect the Pinion Gear. If OK, replace the Vehicle Speed Sensor. Perform POWERTRAIN VERIFICATION TEST VER - 5 - NGC. No → Repair the (K4) Sensor ground circuit for an open. Perform POWERTRAIN VERIFICATION TEST VER - 5 - NGC.	All
5	Turn the ignition off. Disconnect the Vehicle Speed Sensor harness connector. Disconnect the PCM harness connector. Measure the resistance of the (G7) Vehicle Speed Sensor Signal circuit in the VSS harness connector to ground. Is the resistance below 100 ohms? Yes → Repair the (G7) VSS Signal circuit for a short to ground. Perform POWERTRAIN VERIFICATION TEST VER - 5 - NGC. No → Go To 6	All
6	Turn the ignition off. Disconnect the Vehicle Speed Sensor harness connector. Disconnect the PCM harness connector. **CAUTION: DO NOT PROBE THE PCM HARNESS CONNECTORS. PROBING THE PCM HARNESS CONNECTORS WILL DAMAGE THE PCM TERMINALS RESULTING IN POOR TERMINAL TO PIN CONNECTION. INSTALL MILLER SPECIAL TOOL #8815 TO PERFORM DIAGNOSIS.** Measure the resistance of the (G7) VSS Signal circuit between the VSS harness connector and to the appropriate terminal of special tool #8815. Is the resistance below 5 ohms? Yes → Go To 7 No → Repair the (G7) VSS Signal circuit for an open. Perform POWERTRAIN VERIFICATION TEST VER - 5 - NGC.	All
7	**NOTE: Before continuing, check the PCM harness connector terminals for corrosion, damage, or terminal push out. Repair as necessary.** If there are no possible causes remaining, view repair, Repair Replace and program the Powertrain Control Module in accordance with the Service Information. Perform POWERTRAIN VERIFICATION TEST VER - 5 - NGC.	All

Symptom List:

P0506-IDLE SPEED LOW PERFORMANCE
P0507-IDLE SPEED HIGH PERFORMANCE
P0519-IDLE SPEED PERFORMANCE

Test Note: All symptoms listed above are diagnosed using the same tests. The title for the tests will be P0506-IDLE SPEED LOW PERFORMANCE.

When Monitored and Set Condition:

P0506-IDLE SPEED LOW PERFORMANCE

When Monitored: Engine Running. During an idle condition.

Set Condition: If the engine RPM does not come within a calibratable low limit of the target idle speed, a failure timer will increment. When the appropriate failure timer reaches its maximum threshold without sign of RPM trending towards control, a soft fail is generated. When a calibratable number of the soft fails is reached, a 1 trip fault is set. When two 1 trip faults occur in a row, the DTC is set and the MIL illuminates.

P0507-IDLE SPEED HIGH PERFORMANCE

When Monitored: Engine Running. During an idle condition.

Set Condition: If the engine RPM does not come within a calibratable high limit of the target idle speed, a failure timer will increment. When the appropriate failure timer reaches its maximum threshold without sign of RPM trending towards control, a soft fail is generated. When a calibratable number of the soft fails is reached, a 1 trip fault is set. When two 1 trip faults occur in a row, the DTC is set and the MIL illuminates.

P0519-IDLE SPEED PERFORMANCE

When Monitored: With the engine idling and the transmission in drive, if automatic. There must not be a MAP sensor trouble code or a Throttle Position Sensor trouble code.

Set Condition: The engine idle is not within 200 rpm above or 100 rpm below the target idle for 40 seconds. Two trip fault.

POSSIBLE CAUSES
GOOD TRIP EQUAL TO ZERO
PCV SYSTEM
IAC MOTOR PASSAGES
VACUUM LEAKS
AIR INDUCTION SYSTEM
THROTTLE BODY AND THROTTLE LINKAGE

P0506-IDLE SPEED LOW PERFORMANCE — Continued

TEST	ACTION	APPLICABILITY
1	Ignition on, engine not running. With the DRBIII®, read DTCs and record the related Freeze Frame data. Is the Good Trip Counter displayed and equal to zero? Yes → Go To 2 No → Refer to the INTERMITTENT CONDITION symptom in the Driveability category. Perform POWERTRAIN VERIFICATION TEST VER - 5 - NGC.	All
2	Visually and Physically inspect the PCV system. Check for the PCV valve disconnected. Check for an incorrect PCV valve. The PCV valve must meet OEM specifications. Damage vacuum hose. Were any of the above condition found? Yes → Repair as necessary. Perform POWERTRAIN VERIFICATION TEST VER - 5 - NGC. No → Go To 3	All
3	Turn the ignition off. Remove the IAC Motor. Inspect the IAC Motor and passages for any obstructions or damage to motor. Were any problems found? Yes → Repair as necessary. Perform POWERTRAIN VERIFICATION TEST VER - 5 - NGC. No → Go To 4	All
4	Start the engine. Inspect the vehicle for external vacuum leaks. Inspect the engine for internal vacuum leaks. Were any vacuum leaks found? Yes → Repair the vacuum leak as necessary. Perform POWERTRAIN VERIFICATION TEST VER - 5 - NGC. No → Go To 5	All
5	Inspect the Air Induction System for the following problems. Restrictions: Dirty Air Cleaner, Foreign material trapped in the air intake tube, etc. Leaks: Air Intake tube connection, Air Cleaner housing, etc. Were any problems found? Yes → Repair or replace as necessary. Perform POWERTRAIN VERIFICATION TEST VER - 5 - NGC. No → Go To 6	All
6	Inspect the throttle body plate carbon build up or other restrictions. Inspect the throttle linkage for binding and smooth operation. Ensure the throttle plate is resting on the stop at idle. Were any problems found? Yes → Repair or replace as necessary. Perform POWERTRAIN VERIFICATION TEST VER - 5 - NGC. No → Test Complete.	All

Symptom:

P0508-IAC VALVE SENSE CIRCUIT LOW

When Monitored and Set Condition:

P0508-IAC VALVE SENSE CIRCUIT LOW

When Monitored: Engine running. Battery voltage greater than 10 volts.

Set Condition: The IAC sense circuit is less than 175 mA. One Trip Fault.

POSSIBLE CAUSES
IAC MOTOR OPERATION
IAC MOTOR
(K39) IAC MOTOR CONTROL CIRCUIT SHORTED TO GROUND
(K60) IAC SIGNAL CIRCUIT OPEN
(K60) IAC SIGNAL CIRCUIT SHORTED TO GROUND
(K39) IAC MOTOR CONTROL CIRCUIT OPEN
PCM

TEST	ACTION	APPLICABILITY
1	**NOTE: If the engine will not idle, maintain an engine speed between 800 and 1500 RPM.** Start the engine. Allow the engine to idle. With the DRBIII®, read the IAC Current. Is the IAC Current below 146 mA? Yes → Go To 2 No → Refer to the INTERMITTENT CONDITION symptom in the Driveability category. Perform POWERTRAIN VERIFICATION TEST VER - 5 - NGC.	All
2	Turn the ignition off. Disconnect the IAC Motor harness connector. Remove the IAC Motor. **NOTE: Inspect the IAC air passages for restriction and damage to the IAC valve.** Measure the resistance across the IAC Motor pin terminals (component). Is the resistance 9.7 +/- 1.0 ohms? Yes → Go To 3 No → Replace the IAC Motor. Perform POWERTRAIN VERIFICATION TEST VER - 5 - NGC.	All

P0508-IAC VALVE SENSE CIRCUIT LOW — Continued

TEST	ACTION	APPLICABILITY
3	Turn the ignition off. Disconnect the IAC Motor harness connector. Disconnect the PCM harness connectors. **CAUTION: DO NOT PROBE THE PCM HARNESS CONNECTORS. PROBING THE PCM HARNESS CONNECTORS WILL DAMAGE THE PCM TERMINALS RESULTING IN POOR TERMINAL TO PIN CONNECTION. INSTALL MILLER SPECIAL TOOL #8815 TO PERFORM DIAGNOSIS.** Measure the resistance of the (K60) IAC Signal circuit from the IAC Motor harness connector to the appropriate terminal of special tool #8815. Is the resistance below 5.0 ohms? Yes → Go To 4 No → Repair the open in the (K60) IAC Signal circuit. Perform POWERTRAIN VERIFICATION TEST VER - 5 - NGC.	All
4	Turn the ignition off. Disconnect the IAC Motor harness connector. Disconnect the PCM harness connectors. Measure the resistance between ground and the (K60) IAC Signal in the IAC Motor harness connector. Is the resistance below 100 ohms? Yes → Repair the short to ground in the (K60) IAC Signal circuit. Perform POWERTRAIN VERIFICATION TEST VER - 5 - NGC. No → Go To 5	All
5	Turn the ignition off. Disconnect the IAC Motor harness connector. Disconnect the PCM harness connectors. Measure the resistance between ground and the (K39) IAC Motor Control circuit in the IAC Motor harness connector. Is the resistance below 100 ohms? Yes → Repair the short to ground in the (K39) IAC Motor Control circuit. Perform POWERTRAIN VERIFICATION TEST VER - 5 - NGC. No → Go To 6	All
6	Turn the ignition off. Disconnect the IAC Motor harness connector. Disconnect the PCM harness connectors. **CAUTION: DO NOT PROBE THE PCM HARNESS CONNECTORS. PROBING THE PCM HARNESS CONNECTORS WILL DAMAGE THE PCM TERMINALS RESULTING IN POOR TERMINAL TO PIN CONNECTION. INSTALL MILLER SPECIAL TOOL #8815 TO PERFORM DIAGNOSIS.** Measure the resistance of the (K39) IAC Return circuit from the IAC Motor harness connector to the appropriate terminal of special tool #8815.7 Is the resistance below 5.0 ohms? Yes → Go To 7 No → Repair the open in the (K39) IAC Motor Control circuit. Perform POWERTRAIN VERIFICATION TEST VER - 5 - NGC.	All

P0508-IAC VALVE SENSE CIRCUIT LOW — Continued

TEST	ACTION	APPLICABILITY
7	**NOTE: Before continuing, check the PCM harness connector terminals for corrosion, damage, or terminal push out. Repair as necessary.** If there are no possible causes remaining, view repair. Repair Replace and program the Powertrain Control Module in accordance with the Service Information. Perform POWERTRAIN VERIFICATION TEST VER - 5 - NGC.	All

Symptom:

P0509-IAC VALVE SENSE CIRCUIT HIGH

When Monitored and Set Condition:

P0509-IAC VALVE SENSE CIRCUIT HIGH

When Monitored: Engine running. Battery voltage greater than 10 volts.

Set Condition: The IAC sense circuit is greater than 980 mA. One Trip Fault.

POSSIBLE CAUSES
IAC MOTOR OPERATION
IAC MOTOR
(K60) IAC SIGNAL CIRCUIT SHORTED TO VOLTAGE
(K39) IAC MOTOR CONTROL CIRCUIT SHORTED TO VOLTAGE
(K60) IAC SIGNAL CIRCUIT SHORTED TO (K39) IAC MOTOR CONTROL CIRCUIT
PCM

TEST	ACTION	APPLICABILITY
1	**NOTE: If the engine will not idle, maintain an engine speed between 800 and 1500 RPM.** Start the engine. Allow the engine to idle. With the DRBIII®, read the IAC Current. Is the IAC Current above 999 mA? Yes → Go To 2 No → Refer to the INTERMITTENT CONDITION symptom in the Driveability category. Perform POWERTRAIN VERIFICATION TEST VER - 5 - NGC.	All
2	Turn the ignition off. Disconnect the IAC Motor harness connector. With the DRBIII®, monitor the IAC Current. Turn the ignition on. Does the DRBIII® display IAC Current at 0mA? Yes → Replace the IAC Motor. Perform POWERTRAIN VERIFICATION TEST VER - 5 - NGC. No → Go To 3	All

P0509-IAC VALVE SENSE CIRCUIT HIGH — Continued

TEST	ACTION	APPLICABILITY
3	Turn the ignition off. Disconnect the IAC Motor harness connector. Turn the ignition on. With the DRBIII®, actuate the ASD Relay. Measure the voltage of the (K60) IAC Signal circuit in the IAC Motor harness connector. Is the voltage above 0.5 of a volt? Yes → Repair the short to voltage in the (K60) IAC Signal circuit. Perform POWERTRAIN VERIFICATION TEST VER - 5 - NGC. No → Go To 4	All
4	Turn the ignition off. Disconnect the IAC Motor harness connector. Turn the ignition on. With the DRBIII®, actuate the ASD Relay. Measure the voltage of the (K39) IAC Motor Driver circuit in the IAC Motor harness connector. Is the voltage above 0.5 of a volt? Yes → Repair the short to voltage in the (K39) IAC Motor Control circuit. Perform POWERTRAIN VERIFICATION TEST VER - 5 - NGC. No → Go To 5	All
5	Turn the ignition off. Disconnect the IAC Motor harness connector. Measure the resistance across the IAC Motor harness connector. Is the resistance below 5.0 ohms? Yes → Repair the (K60) IAC Motor Signal circuit short to the (K39) IAC Motor Control circuit. Perform POWERTRAIN VERIFICATION TEST VER - 5 - NGC. No → Go To 6	All
6	**NOTE: Before continuing, check the PCM harness connector terminals for corrosion, damage, or terminal push out. Repair as necessary.** If there are no possible causes remaining, view repair. Repair Replace and program the Powertrain Control Module in accordance with the Service Information. Perform POWERTRAIN VERIFICATION TEST VER - 5 - NGC.	All

Symptom:

P0513-INVALID SKIM KEY

When Monitored and Set Condition:

P0513-INVALID SKIM KEY

When Monitored: Ignition on.

Set Condition: The PCM detects an invalid SKREEM key.

POSSIBLE CAUSES
INCORRECT VIN IN PCM
INVALID SKREEM KEY NOT PRESENT
NO COMMUNICATION WITH SKREEM
NO VIN PROGRAMMED IN THE PCM
PCM
SKREEM TROUBLE CODES SET

TEST	ACTION	APPLICABILITY
1	Turn the ignition on. With the DRBIII®, read the PCM DTCs. Is the Good Trip Counter displayed and equal to zero? Yes → Go To 2 No → Go To 7	All
2	With the DRBIII®, attempt to communicate with the SKREEM. Turn the ignition on. Can the DRBIII® communicate with the SKREEM? Yes → Go To 3 No → Refer to the No Communication category. Perform SKREES VERIFICATION.	All
3	Turn the ignition on. With the DRBIII®, check for SKREEM DTCs. Are any DTCs present in the SKREEM? Yes → Refer to SKIM category for the related symptom(s). Perform SKREES VERIFICATION. No → Go To 4	All
4	Turn the ignition on. With the DRBIII®, display the VIN that is programmed in the PCM. Has a VIN been programmed into the PCM? Yes → Go To 5 No → Program the correct VIN into the PCM and retest. Perform SKREES VERIFICATION.	All

P0513-INVALID SKIM KEY — Continued

TEST	ACTION	APPLICABILITY
5	Turn the ignition on. With the DRBIII®, display the VIN that is programmed in the PCM. Was the correct VIN programmed into the PCM? Yes → Go To 6 No → Replace and program the Powertrain Control Module in accordance with the Service Information. Perform SKREES VERIFICATION.	All
6	Turn the ignition off. Replace and program the SKREEM in accordance with the Service Information. Turn the ignition on. With the DRBIII®, erase all SKREEM and PCM DTCs. Attempt to start and idle the engine. With the DRBIII®, read the PCM DTCs. Does the DRBIII® display this code? Yes → NOTE: Before continuing, check the PCM harness connector termnals for corrosion, damage, or terminal push out. Repair as necessary. Replace and program the Powertrain Control Module in accordance with the Service Information. Perform SKREES VERIFICATION. No → Test Complete.	All
7	**NOTE: You must obtain the SKREEM pin number.** **NOTE: This DTC could have been set if the SKREEM harness connector was disconnected, or if the SKREEM was replaced recently.** **NOTE: All keys that the customer uses for this vehicle must be tested to verify they are operating properly.** Turn the ignition on. Verify the correct VIN is programmed into the PCM and SKREEM. Turn the ignition off. With the next customer key turn the ignition key on and crank the engine to start. With the DRBIII®, read the PCM DTCs. Look for P0513. Is the Good Trip Counter for DTC P0513 displayed and equal to 0? Yes → Replace the Ignition Key. Perform SKREES VERIFICATION. No → Test Complete. **NOTE: If this DTC cannot be reset, it could have been an actual theft attempt.**	All

Symptom:

P0516-BATTERY TEMPERATURE SENSOR LOW

When Monitored and Set Condition:

P0516-BATTERY TEMPERATURE SENSOR LOW

When Monitored: Ignition on.

Set Condition: Battery temperature sensor voltage below 0.5 of a volt.

POSSIBLE CAUSES
BATTERY TEMP SENSOR VOLTAGE BELOW 0.5 VOLTS
BATTERY TEMP SENSOR INTERNAL FAILURE
BATTERY TEMP SIGNAL SHORTED TO GROUND
BATTERY TEMP SIGNAL SHORTED TO SENSOR GROUND CIRCUIT
PCM

TEST	ACTION	APPLICABILITY
1	Ignition on, engine not running. With the DRBIII®, read the Battery Temp Sensor voltage. Is the voltage below 0.5 volt? Yes → Go To 2 No → Refer to the INTERMITTENT CONDITION symptom in the Driveability category. Perform POWERTRAIN VERIFICATION TEST VER - 5 - NGC.	All
2	Turn the ignition off. Disconnect the Battery Temp Sensor harness connector. Ignition on, engine not running. With the DRBIII®, read Battery Temp Sensor voltage. Does the Battery Temp Sensor voltage read approximately 5.0 volts? Yes → Replace the Battery Temperature Sensor. Perform POWERTRAIN VERIFICATION TEST VER - 5 - NGC. No → Go To 3	All
3	Turn the ignition off. Disconnect the Battery Temp Sensor harness connector. Disconnect the PCM harness connector. Measure the resistance between ground and the Battery Temp Signal circuit in the Battery Temp Sensor harness connector. Is the resistance below 100 ohms? Yes → Repair the short to ground in the Battery Temp Signal circuit. Perform POWERTRAIN VERIFICATION TEST VER - 5 - NGC. No → Go To 4	All

P0516-BATTERY TEMPERATURE SENSOR LOW — Continued

TEST	ACTION	APPLICABILITY
4	Turn the ignition off. Disconnect the Battery Temp Sensor harness connector. Disconnect the PCM harness connector. Measure the resistance between the Battery Temp Signal circuit and the Sensor ground circuit in the Battery Temp Sensor harness connector. Is the resistance below 100 ohms? Yes → Repair the Sensor ground shorted to the Battery Temp Sensor Signal circuit. Perform POWERTRAIN VERIFICATION TEST VER - 5 - NGC. No → Go To 5	All
5	**NOTE: Before continuing, check the PCM harness connector terminals for corrosion, damage, or terminal push out. Repair as necessary.** If there are no possible causes remaining, view repair. Repair Replace and program the Powertrain Control Module in accordance with the Service Information. Perform POWERTRAIN VERIFICATION TEST VER - 5 - NGC.	All

Symptom:

P0517-BATTERY TEMPERATURE SENSOR HIGH

When Monitored and Set Condition:

P0517-BATTERY TEMPERATURE SENSOR HIGH

When Monitored: Ignition on.

Set Condition: Battery temperature voltage above 4.8 volts.

POSSIBLE CAUSES
BATTERY TEMP VOLTAGE ABOVE 4.8 VOLTS
BATTERY TEMP SIGNAL CIRCUIT SHORTED TO BATTERY VOLTAGE
BATTERY TEMP SENSOR INTERNAL FAILURE
BATTERY TEMP SIGNAL CIRCUIT OPEN
SENSOR GROUND CIRCUIT OPEN
PCM

TEST	ACTION	APPLICABILITY
1	Ignition on, engine not running. With the DRBIII®, read the Battery Temp Sensor voltage. Is the voltage above 4.8 volts? Yes → Go To 2 No → Refer to the INTERMITTENT CONDITION symptom in the Driveability category. Perform POWERTRAIN VERIFICATION TEST VER - 5 - NGC.	All
2	Turn the ignition off. Disconnect the Battery Temp Sensor harness connector. Ignition on, engine not running. Measure the voltage of the Battery Temp Signal circuit in the Battery Temp Sensor harness connector. Is the voltage above 5.2 volts? Yes → Repair the short to battery voltage in the Battery Temp Signal circuit. Perform POWERTRAIN VERIFICATION TEST VER - 5 - NGC. No → Go To 3	All

P0517-BATTERY TEMPERATURE SENSOR HIGH — Continued

TEST	ACTION	APPLICABILITY
3	Turn the ignition off. Disconnect the Battery Temp harness connector. Connect a jumper wire between the Battery Temp Signal circuit and the Sensor ground circuit in the Battery Temp harness connector. Ignition on, engine not running. With the DRBIII®, read the Battery Temp Sensor voltage. Is the voltage below 1.0 volt? Yes → Replace the Battery Temp Sensor. Perform POWERTRAIN VERIFICATION TEST VER - 5 - NGC. No → Go To 4	All
4	Turn the ignition off. Disconnect the Battery Temp Sensor harness connector. Disconnect the PCM harness connector. **CAUTION: DO NOT PROBE THE PCM HARNESS CONNECTORS. PROBING THE PCM HARNESS CONNECTORS WILL DAMAGE THE PCM TERMINALS RESULTING IN POOR TERMINAL TO PIN CONNECTION. INSTALL MILLER SPECIAL TOOL #8815 TO PERFORM DIAGNOSIS.** Measure the resistance of the Battery Temp Signal circuit from the Battery Temp Sensor harness connector to the appropriate terminal of special tool #8815. Is the resistance below 5.0 ohms? Yes → Go To 5 No → Repair the open in the Battery Temp Signal circuit. Perform POWERTRAIN VERIFICATION TEST VER - 5 - NGC.	All
5	Turn the ignition off. Disconnect the Battery Sensor harness connector. Disconnect the PCM harness connector. **CAUTION: DO NOT PROBE THE PCM HARNESS CONNECTORS. PROBING THE PCM HARNESS CONNECTORS WILL DAMAGE THE PCM TERMINALS RESULTING IN POOR TERMINAL TO PIN CONNECTION. INSTALL MILLER SPECIAL TOOL #8815 TO PERFORM DIAGNOSIS.** Measure the resistance of the Sensor ground circuit from the Battery Temp Sensor harness connector to the appropriate terminal of special tool #8815. Is the resistance below 5.0 ohms? Yes → Go To 6 No → Repair the open in the Sensor ground circuit. Perform POWERTRAIN VERIFICATION TEST VER - 5 - NGC.	All
6	**NOTE: Before continuing, check the PCM harness connector terminals for corrosion, damage, or terminal push out. Repair as necessary.** If there are no possible causes remaining, view repair. Repair Replace and program the Powertrain Control Module in accordance with the Service Information. Perform POWERTRAIN VERIFICATION TEST VER - 5 - NGC.	All

Symptom:

P0522 PRESSURE SENSOR LOW

When Monitored and Set Condition:

P0522 PRESSURE SENSOR LOW

When Monitored: Engine running and battery voltage above 10.4 volts.

Set Condition: The oil pressure sensor voltage at PCM goes below 0.1 of a volt for 0.5 of a second.

POSSIBLE CAUSES
OIL PRESSURE SENSOR VOLTAGE BELOW 0.1 VOLTS
OIL PRESSURE SENSOR INTERNAL FAILURE
(G6) OIL PRESS SIGNAL SHORTED TO GROUND
PCM

TEST	ACTION	APPLICABILITY
1	**NOTE: Ensure the engine oil pressure is at the correct pressure before continuing.** Ignition on, engine not running. With the DRBIII®, read the Oil Pressure Sensor voltage. Is the voltage below 0.1 volt? Yes → Go To 2 No → Refer to the INTERMITTENT CONDITION symptom in the Driveability category. Perform POWERTRAIN VERIFICATION TEST VER - 5 - NGC.	All
2	Turn the ignition off. Disconnect the Oil Pressure Sensor harness connector. Ignition on, engine not running. With the DRBIII®, read Oil Pressure Sensor voltage. Does the Oil Pressure Sensor voltage read approximately 5.0 volts? Yes → Replace the Oil Pressure Sensor. Perform POWERTRAIN VERIFICATION TEST VER - 5 - NGC. No → Go To 3	All
3	Turn the ignition off. Disconnect the Oil Pressure Sensor harness connector. Disconnect the PCM harness connector. Measure the resistance between ground and the (G6) Oil Press Signal circuit in the Oil Pressure Sensor harness connector. Is the resistance below 100 ohms? Yes → Repair the ground shorted to the (G6) Oil Press Signal circuit. Perform POWERTRAIN VERIFICATION TEST VER - 5 - NGC. No → Replace and program the Powertrain Control Module in accordance with the Service Information. Perform POWERTRAIN VERIFICATION TEST VER - 5 - NGC.	All

Symptom:

P0532-A/C PRESSURE SENSOR LOW

When Monitored and Set Condition:

P0532-A/C PRESSURE SENSOR LOW

When Monitored: The engine running. The A/C relay energized.

Set Condition: The A/C pressure sensor signal voltage at the PCM goes below 0.58 volts for 2.6 seconds. One Trip Fault.

POSSIBLE CAUSES
A/C PRESSURE SENSOR VOLTAGE BELOW 0.6 VOLTS
(K7) 5 VOLT SUPPLY CIRCUIT SHORTED TO GROUND
(K7) 5 VOLT SUPPLY CIRCUIT OPEN
A/C PRESSURE SENSOR INTERNAL FAILURE
(C18) A/C PRESSURE SIGNAL CIRCUIT SHORTED TO GROUND
(C18) A/C PRESSURE SIGNAL CIRCUIT SHORTED TO (K4) SENSOR GROUND CIRCUIT
PCM (K7) 5 VOLT SUPPLY CIRCUIT
PCM A/C PRESSURE SENSOR SIGNAL

TEST	ACTION	APPLICABILITY
1	**NOTE: Ensure the A/C refrigerant System is properly charged per the Service Information.** Start the engine. With the DRBIII®, read the A/C Pressure Sensor voltage. Is the voltage below 0.6 of a volt? Yes → Go To 2 No → Refer to the INTERMITTENT CONDITION symptom in the Driveability category. Perform POWERTRAIN VERIFICATION TEST VER - 2 - NGC.	All
2	Turn the ignition off. Disconnect the A/C Pressure Sensor harness connector. Turn the ignition on. Measure the voltage of the (K7) 5 Volt Supply circuit in the A/C Pressure Sensor harness connector. Is the voltage between 4.5 to 5.2 volts? Yes → Go To 3 No → Go To 7	All

P0532-A/C PRESSURE SENSOR LOW — Continued

TEST	ACTION	APPLICABILITY
3	Turn the ignition off. Disconnect the A/C Pressure Sensor harness connector. With the DRBIII®, monitor the A/C Pressure Sensor voltage. Turn the ignition on. Is the voltage above 0.6 of a volt? Yes → Replace the A/C Pressure Sensor. Perform POWERTRAIN VERIFICATION TEST VER - 2 - NGC. No → Go To 4	All
4	Turn the ignition off. Disconnect the A/C Pressure Sensor harness connector. Disconnect the PCM harness connector. Measure the resistance between ground and the (C18) A/C Pressure Signal circuit in the A/C Pressure Sensor harness connector. Is the resistance below 100 ohms? Yes → Repair the short to ground in the (C18) A/C Pressure Signal circuit. Perform POWERTRAIN VERIFICATION TEST VER - 2 - NGC. No → Go To 5	All
5	Turn the ignition off. Disconnect the A/C Pressure Sensor harness connector. Disconnect the PCM harness connector. Measure the resistance between the (C18) A/C Pressure Sensor Signal circuit and the (K4) Sensor ground circuit in the A/C Pressure Sensor harness connector. Is the resistance below 100 ohms? Yes → Repair the short to the (K4) Sensor ground circuit in the (C18) A/C Pressure Signal circuit. Perform POWERTRAIN VERIFICATION TEST VER - 2 - NGC. No → Go To 6	All
6	**NOTE: Before continuing, check the PCM harness connector terminals for corrosion, damage, or terminal push out. Repair as necessary.** If there are no possible causes remaining, view repair. Repair Replace and program the Powertrain Control Module in accordance with the Service Information. Perform POWERTRAIN VERIFICATION TEST VER - 2 - NGC.	All
7	Turn the ignition off. Disconnect the A/C Pressure Sensor harness connector. Disconnect the PCM harness connector. Measure the resistance between ground and the (K7) 5 Volt Supply circuit in the A/C Pressure Sensor harness connector. Is the resistance below 100 ohms? Yes → Repair the short to ground in the (K7) 5 Volt Supply circuit. Perform POWERTRAIN VERIFICATION TEST VER - 2 - NGC. No → Go To 8	All

P0532-A/C PRESSURE SENSOR LOW — Continued

TEST	ACTION	APPLICABILITY
8	Turn the ignition off. Disconnect the A/C Pressure Sensor harness connector. Disconnect the PCM harness connector. **CAUTION: DO NOT PROBE THE PCM HARNESS CONNECTORS. PROBING THE PCM HARNESS CONNECTORS WILL DAMAGE THE PCM TERMINALS RESULTING IN POOR TERMINAL TO PIN CONNECTION. INSTALL MILLER SPECIAL TOOL #8815 TO PERFORM DIAGNOSIS.** Measure the resistance of the (K7) 5 Volt Supply circuit from the A/C Pressure Sensor harness connector to the appropriate terminal of special tool #8815. Is the resistance below 5.0 ohms? Yes → Go To 9 No → Repair the open in the (K7) 5 Volt Supply circuit. Perform POWERTRAIN VERIFICATION TEST VER - 2 - NGC.	All
9	**NOTE: Before continuing, check the PCM harness connector terminals for corrosion, damage, or terminal push out. Repair as necessary.** If there are no possible causes remaining, view repair. Repair Replace and program the Powertrain Control Module in accordance with the Service Information. Perform POWERTRAIN VERIFICATION TEST VER - 2 - NGC.	All

Symptom:

P0533-A/C PRESSURE SENSOR HIGH

When Monitored and Set Condition:

P0533-A/C PRESSURE SENSOR HIGH

When Monitored: The engine running. The A/C relay energized.

Set Condition: The A/C pressure sensor signal at the PCM goes above 4.92 volts. One trip Fault.

POSSIBLE CAUSES
A/C PRESSURE SENSOR VOLTAGE ABOVE 4.6 VOLTS
(C18) A/C PRESSURE SIGNAL CIRCUIT SHORTED TO (K7) 5 VOLT SUPPLY CIRCUIT
(C18) A/C PRESSURE SIGNAL CIRCUIT SHORTED TO BATTERY VOLTAGE
A/C PRESSURE SENSOR INTERNAL FAILURE
(C18) A/C PRESSURE SIGNAL CIRCUIT OPEN
(K4) SENSOR GROUND CIRCUIT OPEN
PCM

TEST	ACTION	APPLICABILITY
1	**NOTE: Ensure the A/C refrigerant System is properly charged per the Service Information.** Start the engine. With the DRBIII®, read the A/C Pressure Sensor voltage. Is the voltage above 4.6 volts? Yes → Go To 2 No → Refer to the INTERMITTENT CONDITION symptom in the Driveability category. Perform POWERTRAIN VERIFICATION TEST VER - 2 - NGC.	All
2	Turn the ignition off. Disconnect the A/C Pressure Sensor harness connector. Disconnect the PCM harness connector. Measure the resistance between the (C18) A/C Pressure Signal circuit and the (K7) 5 Volt Supply circuit in the A/C Pressure Sensor harness connector. Is the resistance below 5.0 ohms? Yes → Repair the (C18) A/C Pressure Signal circuit for a short to the (K7) 5 Volt Supply circuit. Perform POWERTRAIN VERIFICATION TEST VER - 2 - NGC. No → Go To 3	All

P0533-A/C PRESSURE SENSOR HIGH — Continued

TEST	ACTION	APPLICABILITY
3	Turn the ignition off. Disconnect the A/C Pressure Sensor harness connector. Turn the ignition on. Measure the voltage on the (C18) A/C Pressure Sensor Signal circuit at the A/C Pressure Sensor harness connector. Is the voltage above 5.2 volts? Yes → Repair the (C18) A/C Pressure Signal circuit for a short to battery voltage. Perform POWERTRAIN VERIFICATION TEST VER - 2 - NGC. No → Go To 4	All
4	Turn the ignition off. Disconnect the A/C Pressure Sensor harness connector. Connect a jumper wire between the (C18) A/C Pressure Signal circuit and the (K4) Sensor ground circuit. With the DRBIII®, monitor the A/C Pressure Sensor voltage. Turn the ignition on. Is the voltage below 1.0 volt? Yes → Replace the A/C Pressure Sensor. Perform POWERTRAIN VERIFICATION TEST VER - 2 - NGC. No → Go To 5	All
5	Turn the ignition off. Disconnect the A/C Pressure Sensor harness connector. Disconnect the PCM harness connector. **CAUTION: DO NOT PROBE THE PCM HARNESS CONNECTORS. PROBING THE PCM HARNESS CONNECTORS WILL DAMAGE THE PCM TERMINALS RESULTING IN POOR TERMINAL TO PIN CONNECTION. INSTALL MILLER SPECIAL TOOL #8815 TO PERFORM DIAGNOSIS.** Measure the resistance of the (C18) A/C Pressure Sensor Signal circuit from the A/C Pressure Sensor harness connector to the appropriate terminal of special tool #8815. Is the resistance below 5.0 ohms? Yes → Go To 6 No → Repair the (C18) A/C Pressure Signal circuit for an open. Perform POWERTRAIN VERIFICATION TEST VER - 2 - NGC.	All
6	Turn the ignition off. Disconnect the A/C Pressure Sensor harness connector. Disconnect the PCM harness connector. **CAUTION: DO NOT PROBE THE PCM HARNESS CONNECTORS. PROBING THE PCM HARNESS CONNECTORS WILL DAMAGE THE PCM TERMINALS RESULTING IN POOR TERMINAL TO PIN CONNECTION. INSTALL MILLER SPECIAL TOOL #8815 TO PERFORM DIAGNOSIS.** Measure the resistance of the (K4) Sensor ground circuit from the A/C Pressure Sensor harness connector to the appropriate terminal of special tool #8815. Is the resistance below 5.0 ohms? Yes → Go To 7 No → Repair the (K4) Sensor ground circuit for an open. Perform POWERTRAIN VERIFICATION TEST VER - 2 - NGC.	All

P0533-A/C PRESSURE SENSOR HIGH — Continued

TEST	ACTION	APPLICABILITY
7	**NOTE: Before continuing, check the PCM harness connector terminals for corrosion, damage, or terminal push out. Repair as necessary.** If there are no possible causes remaining, view repair. Repair Replace and program the Powertrain Control Module in accordance with the Service Information. Perform POWERTRAIN VERIFICATION TEST VER - 2 - NGC.	All

Symptom:

P0562-BATTERY VOLTAGE LOW

When Monitored and Set Condition:

P0562-BATTERY VOLTAGE LOW

When Monitored: The engine running. The engine speed greater than 1150 RPM.

Set Condition: The battery sensed voltage is 1 volt below the charging goal for 13.47 seconds. The PCM senses the battery voltage turns off the field driver and senses the battery voltage again. If the voltages are the same, the code is set. One trip Fault.

POSSIBLE CAUSES
GOOD TRIP EQUAL TO ZERO
B+ CIRCUIT HIGH RESISTANCE
GENERATOR GROUND HIGH RESISTANCE
GENERATOR OPERATION
(Z1) GENERATOR FIELD GROUND CIRCUIT OPEN
(K20) GEN FIELD CONTROL CIRCUIT SHORTED TO GROUND
(K20) GEN FIELD CONTROL CIRCUIT OPEN
PCM

TEST	ACTION	APPLICABILITY
1	**NOTE: Ensure the Battery is in good condition. Using the Midtronics Battery Tester, test the Battery before continuing.** **NOTE: Inspect the vehicle for aftermarket accessories that may exceed the Generator System output.** Turn the ignition off. **NOTE: Ensure the generator drive belt is in good operating condition.** **NOTE: Inspect the fuses in the PDC. If a fuse is found to be open use the wiring diagram/schematic as a guide, inspect the wiring and connectors for damage.** Ignition on, engine not running. With the DRBIII®, read DTCs and record the related Freeze Frame data. Is the Good Trip Counter displayed and equal to zero? Yes → Go To 2 No → Refer to the INTERMITTENT CONDITION symptom in the Driveability category. Perform POWERTRAIN VERIFICATION TEST VER - 3 - NGC.	All

P0562-BATTERY VOLTAGE LOW — Continued

TEST	ACTION	APPLICABILITY
2	**WARNING: WHEN THE ENGINE IS OPERATING, DO NOT STAND IN A DIRECT LINE WITH THE FAN. DO NOT PUT YOUR HANDS NEAR THE PULLEYS, BELTS OR FAN. DO NOT WEAR LOOSE CLOTHING.** Ignition on, engine not running. **NOTE: Ensure all wires are clear of the engine's moving parts.** Measure the voltage between the Generator B+ Terminal and the Battery+ Post. Start the engine. Is the voltage above 0.4 of a volt? Yes → Repair the B+ circuit for high resistance between the Generator and Battery. Perform POWERTRAIN VERIFICATION TEST VER - 3 - NGC. No → Go To 3	All
3	**WARNING: WHEN THE ENGINE IS OPERATING, DO NOT STAND IN A DIRECT LINE WITH THE FAN. DO NOT PUT YOUR HANDS NEAR THE PULLEYS, BELTS OR FAN. DO NOT WEAR LOOSE CLOTHING.** Start the engine. Allow the engine to reach normal operating temperature. **NOTE: Ensure all wires are clear of the engine's moving parts.** Measure the voltage between the Generator case and Battery ground post. Is the voltage above 0.1 of a volt? Yes → Repair Generator Ground for high resistance, Generator Case to Battery ground side. Perform POWERTRAIN VERIFICATION TEST VER - 3 - NGC. No → Go To 4	All
4	Turn the ignition off. Disconnect the Generator Field harness connector. Using a 12-volt test light, jumper it across the Generator Field harness connector. Ignition on, engine not running. With the DRBIII®, actuate the Generator Field Driver circuit. Does the test light illuminate brightly and flash on and off? Yes → Replace the Generator. Perform POWERTRAIN VERIFICATION TEST VER - 3 - NGC. No → Go To 5	All
5	Turn the ignition off. Disconnect the Generator Field harness connector. Using a 12-volt test connected to battery voltage, probe the Generator (Z1) Ground circuit in the Generator Field harness connector. Does the test light illuminate brightly? Yes → Go To 6 No → Repair the open in the (Z1) Generator Field Ground circuit. Perform POWERTRAIN VERIFICATION TEST VER - 3 - NGC.	All

P0562-BATTERY VOLTAGE LOW — Continued

TEST	ACTION	APPLICABILITY
6	Ignition on, engine not running. Disconnect the Generator Field harness connector. Disconnect the PCM harness connector. Measure the resistance between ground and the (K20) Gen Field Control circuit in the Generator Field harness connector. Is the resistance below 100 ohms? Yes → Repair the (K20) Gen Field Control circuit for a short to ground. Perform POWERTRAIN VERIFICATION TEST VER - 3 - NGC. No → Go To 7	All
7	Turn the ignition off. Disconnect the Generator Field harness connector. Disconnect the PCM harness connector. **CAUTION: DO NOT PROBE THE PCM HARNESS CONNECTORS. PROBING THE PCM HARNESS CONNECTORS WILL DAMAGE THE PCM TERMINALS RESULTING IN POOR TERMINAL TO PIN CONNECTION. INSTALL MILLER SPECIAL TOOL #8815 TO PERFORM DIAGNOSIS.** Measure the resistance of the (K20) Gen Field Control circuit from the Generator Field harness connector to the appropriate terminal of the special tool #8815. Is the resistance below 5.0 ohms? Yes → Go To 8 No → Repair the open in the (K20) Gen Field Control circuit. Perform POWERTRAIN VERIFICATION TEST VER - 3 - NGC.	All
8	**NOTE: Before continuing, check the PCM harness connector terminals for corrosion, damage or terminal push out. Repair as necessary.** If there are no possible causes remaining, view repair. Repair Replace and program the Powertrain Control Module in accordance with the Service Information. Perform POWERTRAIN VERIFICATION TEST VER - 3 - NGC.	All

Symptom:

P0563-BATTERY VOLTAGE HIGH

When Monitored and Set Condition:

P0563-BATTERY VOLTAGE HIGH

When Monitored: With the ignition on. Engine RPM greater than 380 RPM.

Set Condition: Battery voltage is 1 volt greater than desired system voltage. One Trip Fault

POSSIBLE CAUSES
GOOD TRIP EQUAL TO ZERO
GENERATOR OPERATION
(K20) GEN FIELD CONTROL CIRCUIT SHORTED TO BATTERY VOLTAGE
PCM

TEST	ACTION	APPLICABILITY
1	**NOTE: Ensure the Battery is in good condition. Using the Midtronics Battery Tester, test the Battery before continuing.** **NOTE: Inspect the vehicle for aftermarket accessories that may exceed the Generator System output.** Turn the ignition off. **NOTE: Ensure the generator drive belt is in good operating condition.** **NOTE: Inspect the fuses in the PDC. If a fuse is found to be open use the wiring diagram/schematic as a guide, inspect the wiring and connectors for damage.** Ignition on, engine not running. With the DRBIII®, read DTCs and record the related Freeze Frame data. Is the Good Trip Counter displayed and equal to zero? Yes → Go To 2 No → Refer to the INTERMITTENT CONDITION symptom in the Driveability category. Perform POWERTRAIN VERIFICATION TEST VER - 3 - NGC.	All
2	Turn the ignition off. Disconnect the Generator Field harness connector. Using a 12-volt test light, jumper it across the Generator Field harness connector. Ignition on, engine not running. With the DRBIII®, actuate the Generator Field Driver circuit. Does the test light illuminate brightly and flash on and off? Yes → Go To 4 No → Go To 3	All

P0563-BATTERY VOLTAGE HIGH — Continued

TEST	ACTION	APPLICABILITY
3	Turn the ignition off. Disconnect the Generator Field harness connector. Disconnect the PCM harness connector. Measure the voltage on the (K20) Gen Field Control circuit at the Generator Field harness connector. Is the voltage above 1.0 volt? Yes → Repair the short to voltage in the (K20) Gen Field Control circuit. Perform POWERTRAIN VERIFICATION TEST VER - 3 - NGC. No → Go To 4	All
4	**NOTE: Before continuing, check the PCM harness connector terminals for corrosion, damage or terminal push out. Repair as necessary.** If there are no possible causes remaining, view repair. Repair Replace and program the Powertrain Control Module in accordance with the Service Information. Perform POWERTRAIN VERIFICATION TEST VER - 3 - NGC.	All

Symptom:

P0572-BRAKE SWITCH #1 CIRCUIT LOW

When Monitored and Set Condition:

P0572-BRAKE SWITCH #1 CIRCUIT LOW

When Monitored: Ignition on.

Set Condition: When the PCM recognizes Brake Switch is mechanically stuck in the low/on position. One Trip Fault. Three Global Good Trips to Clear.

POSSIBLE CAUSES
GOOD TRIP EQUAL TO ZERO
BRAKE LAMP SWITCH OPERATION
(K29) BRAKE SWITCH SIGNAL CIRCUIT SHORTED TO GROUND
PCM

TEST	ACTION	APPLICABILITY
1	**NOTE: Verify battery voltage is greater than 10 volts.** Record Freeze Frame Data that was set by the related DTC before continuing. With the DRBIII®, read DTCs and record the related Freeze Frame data. Is the Good Trip Counter displayed and equal to zero? Yes → Go To 2 No → Refer to the INTERMITTENT CONDITION symptom in the Diagnostic category. Perform POWERTRAIN VERIFICATION TEST VER - 5 - NGC.	All
2	Turn the ignition off. Remove the Brake Lamp Switch and disconnect the harness connector. Measure the resistance between the (Z1) Ground circuit terminal and the (K29) Brake Switch Signal terminal at the Brake Lamp Switch. Apply and release the brake pedal plunger while monitoring the ohmmeter. Does the resistance change from below 5.0 ohms to an open circuit? Yes → Go To 3 No → Replace the Brake Lamp Switch. Perform POWERTRAIN VERIFICATION TEST VER - 5 - NGC.	All
3	Turn the ignition off. Disconnect the PCM harness connectors. Measure the resistance between ground and the (K29) Brake Switch Signal circuit in the Brake Lamp Switch harness connector. Is the resistance below 100 ohms? Yes → Repair the short to ground in the (K29) Brake Switch Signal circuit. Perform POWERTRAIN VERIFICATION TEST VER - 5 - NGC. No → Go To 4	All

P0572-BRAKE SWITCH #1 CIRCUIT LOW — Continued

TEST	ACTION	APPLICABILITY
4	**NOTE: Before continuing, check the PCM harness connector terminals for corrosion, damage, or terminal push out. Repair as necessary.** Using the schematics as a guide, inspect the wire harness and connectors. Pay particular attention to all Power and Ground circuits. If there are no possible causes remaining, view repair. Repair Replace and program the Powertrain Control Module in accordance with the Service Information. Perform POWERTRAIN VERIFICATION TEST VER - 5 - NGC.	All

Symptom:

P0573-BRAKE SWITCH #1 CIRCUIT HIGH

When Monitored and Set Condition:

P0573-BRAKE SWITCH #1 CIRCUIT HIGH

When Monitored: Ignition on.

Set Condition: When the PCM recognizes Brake Switch is stuck in the high/off position. One Trip Fault. Three good trips to turn off the MIL.

POSSIBLE CAUSES
GOOD TRIP EQUAL TO ZERO
BRAKE LAMP SWITCH OPERATION
(K29) BRAKE SWITCH SIGNAL CIRCUIT OPEN
(Z1) GROUND CIRCUIT OPEN
PCM

TEST	ACTION	APPLICABILITY
1	Ignition on, engine not running. With the DRBIII®, read DTCs and record the related Freeze Frame data. Is the Good Trip Counter displayed and equal to zero? Yes → Go To 2 No → Refer to the INTERMITTENT CONDITION in the symptom Diagnostic category. Perform POWERTRAIN VERIFICATION TEST VER - 5 - NGC.	All
2	Turn the ignition off. Disconnect the Brake Lamp Switch harness connector. Measure the resistance between the (Z1) Ground circuit terminal and the (K29) Brake Switch Signal circuit terminal in the Brake Lamp Switch. Apply and release the brake pedal while monitoring the ohmmeter. Does the resistance change from below 5.0 ohms to an open circuit? Yes → Go To 3 No → Replace the Brake Lamp Switch. Perform POWERTRAIN VERIFICATION TEST VER - 5 - NGC.	All

P0573-BRAKE SWITCH #1 CIRCUIT HIGH — Continued

TEST	ACTION	APPLICABILITY
3	Turn the ignition off. Disconnect the PCM harness connectors. **CAUTION: DO NOT PROBE THE PCM HARNESS CONNECTORS. PROBING THE PCM HARNESS CONNECTORS WILL DAMAGE THE PCM TERMINALS RESULTING IN POOR TERMINAL TO PIN CONNECTION. INSTALL MILLER SPECIAL TOOL #8815 TO PERFORM DIAGNOSIS.** Measure the resistance of the (K29) Brake Switch Signal circuit from the Brake Lamp Switch harness connector to the appropriate terminal of special tool #8815. Is the resistance below 5.0 ohms? Yes → Go To 4 No → Repair the open in the (K29) Brake Switch Signal circuit. Perform POWERTRAIN VERIFICATION TEST VER - 5 - NGC.	All
4	Measure the resistance between the (Z2) Ground circuit and ground at the Brake Lamp Switch harness connector. Is the resistance below 5.0 ohms? Yes → Go To 5 No → Repair the open in the (Z1) Ground circuit. Perform POWERTRAIN VERIFICATION TEST VER - 5 - NGC.	All
5	**NOTE: Before continuing, check the PCM harness connector terminals for corrosion, damage, or terminal push out. Repair as necessary.** Using the schematics as a guide, inspect the wire harness and connectors. Pay particular attention to all Power and Ground circuits. If there are no possible causes remaining, view repair. Repair Replace and program the Powertrain Control Module in accordance Service Information. Perform POWERTRAIN VERIFICATION TEST VER - 5 - NGC.	All

Symptom:

P0580-SPEED CONTROL SWITCH #1 LOW

When Monitored and Set Condition:

P0580-SPEED CONTROL SWITCH #1 LOW

When Monitored: With the ignition key on. Battery voltage above 10 volts.

Set Condition: The PCM detects the Speed Control Switch Signal circuit voltage is less than 0.43. One Trip Fault.

POSSIBLE CAUSES
SPEED CONTROL SWITCH VOLTAGE LOW
SPEED CONTROL ON/OFF SWITCH
SPEED CONTROL RESUME/ACCEL SWITCH
(V37) S/C SWITCH SIGNAL CIRCUIT SHORTED TO (K4) SENSOR GROUND
(V37) S/C SWITCH SIGNAL CIRCUIT SHORTED TO GROUND
PCM

TEST	ACTION	APPLICABILITY
1	**NOTE: Do not press any of the Speed Control Switch buttons.** Ignition on, engine not running. With the DRBIII®, read the Speed Control voltage. Is the Speed Control voltage below 1.0 volt? Yes → Go To 2 No → Refer to the INTERMITTENT CONDITION symptom in the Driveability category. Perform POWERTRAIN VERIFICATION TEST VER - 4 - NGC.	All
2	Ignition on, engine not running. With the DRBIII®, monitor the Speed Control Switch voltage. Disconnect the Speed Control On/Off Switch harness connector. Did the voltage change to above 4.7 volts? Yes → Replace the Speed Control On/Off Switch. Perform POWERTRAIN VERIFICATION TEST VER - 4 - NGC. No → Go To 3	All
3	Ignition on, engine not running. With the DRBIII®, monitor the Speed Control Switch voltage. Disconnect the Speed Control Resume/Accel Switch harness connector. Did the volt change to above 4.7 volts? Yes → Replace the Speed Control Resume/Accel Switch. Perform POWERTRAIN VERIFICATION TEST VER - 4 - NGC. No → Go To 4	All

P0580-SPEED CONTROL SWITCH #1 LOW — Continued

TEST	ACTION	APPLICABILITY
4	Turn the ignition off. Disconnect the Speed Control On/Off Switch harness connector. Disconnect the Speed Control Resume/Accel Switch harness connector. Disconnect the PCM harness connector. **CAUTION: DO NOT PROBE THE PCM HARNESS CONNECTORS. PROBING THE PCM HARNESS CONNECTORS WILL DAMAGE THE PCM TERMINALS RESULTING IN POOR TERMINAL TO PIN CONNECTION. INSTALL MILLER SPECIAL TOOL #8815 TO PERFORM DIAGNOSIS.** Measure the resistance between the (K4) Sensor ground circuit and the (V37) S/C Switch Signal circuit at the Speed Control Switch. Is the resistance below 5.0 ohms? Yes → Repair the (V37) S/C Switch Signal circuit short to (K4) Sensor ground circuit. Perform POWERTRAIN VERIFICATION TEST VER - 4 - NGC. No → Go To 5	All
5	Turn the ignition off. Disconnect the Speed Control On/Off Switch harness connector. Disconnect the Speed Control Resume/Accel Switch harness connector. Disconnect the PCM harness connector. **CAUTION: DO NOT PROBE THE PCM HARNESS CONNECTORS. PROBING THE PCM HARNESS CONNECTORS WILL DAMAGE THE PCM TERMINALS RESULTING IN POOR TERMINAL TO PIN CONNECTION. INSTALL MILLER SPECIAL TOOL #8815 TO PERFORM DIAGNOSIS.** Measure the resistance between ground and the (V37) S/C Switch Signal circuit to the appropriate terminal of special tool #8815. Is the resistance below 5.0 ohms? Yes → Repair the short to ground in the (V37) S/C Switch Signal circuit. Perform POWERTRAIN VERIFICATION TEST VER - 4 - NGC. No → Go To 6	All
6	**NOTE: Before continuing, disconnect the PCM harness connector and check the related wiring terminals for corrosion, damage or terminal push out. Repair as necessary.** If there are no possible causes remaining, view repair. Repair Replace and program the Powertrain Control Module in accordance with the Service Information. Perform POWERTRAIN VERIFICATION TEST VER - 4 - NGC.	All

Symptom:

P0581-SPEED CONTROL SWITCH #1 HIGH

When Monitored and Set Condition:

P0581-SPEED CONTROL SWITCH #1 HIGH

When Monitored: With the ignition key on. Battery voltage above 10 volts.

Set Condition: The PCM detects an open or short to voltage in the Speed Control Switch Signal circuit. One Trip Fault.

POSSIBLE CAUSES
SPEED CONTROL SWITCH VOLTAGE HIGH
SPEED CONTROL SWITCHES
(V37) S/C SWITCH SIGNAL CIRCUIT SHORTED TO BATTERY VOLTAGE
(K4) SENSOR GROUND OPEN
PCM

TEST	ACTION	APPLICABILITY
1	**NOTE: Do not press any of the Speed Control Switch buttons.** Ignition on, engine not running. With the DRBIII®, read the Speed Control voltage. Is the Speed Control voltage above 4.8 volt? Yes → Go To 2 No → Refer to the INTERMITTENT CONDITION symptom in the Driveability category. Perform POWERTRAIN VERIFICATION TEST VER - 4 - NGC.	All
2	Turn the ignition off. Remove the Speed Control Switches from the steering wheel. Measure the resistance across each Speed Control Switch. Monitor the ohmmeter while pressing each function button on each switch. Resume/Accel - 15,400 ohms Cancel - 909 +/- 9 ohms Decel (Coast) - 2940 +/- 30 ohms On/Off - 0 ohms Set - 6650 +/- 66 ohms Does the function on the Speed Control Switches have the correct ohm value? Yes → Go To 3 No → Replace the Speed Control Switch that had the incorrect resistance value. Perform POWERTRAIN VERIFICATION TEST VER - 4 - NGC.	All

P0581-SPEED CONTROL SWITCH #1 HIGH — Continued

TEST	ACTION	APPLICABILITY
3	Turn the ignition off. Disconnect the Speed Control On/Off Switch harness connector. Disconnect the Speed Control Resume/Accel Switch harness connector. Disconnect the PCM harness connector. Measure the voltage of the (V37) S/C Switch Signal circuit at the Speed Control harness connector. Is the is the voltage above 5.0 volts? Yes → Repair the (V37) S/C Switch Signal circuit shorted to the battery voltage. Perform POWERTRAIN VERIFICATION TEST VER - 4 - NGC. No → Go To 4	All
4	**NOTE: The measurement must be taken from both Speed Control Switch harness connector.** Turn the ignition off. Disconnect the Speed Control On/Off Switch harness connector. Disconnect the Speed Control Resume/Accel Switch harness connector. Disconnect the PCM harness connector. **CAUTION: DO NOT PROBE THE PCM HARNESS CONNECTORS. PROBING THE PCM HARNESS CONNECTORS WILL DAMAGE THE PCM TERMINALS RESULTING IN POOR TERMINAL TO PIN CONNECTION. INSTALL MILLER SPECIAL TOOL #8815 TO PERFORM DIAGNOSIS.** Measure the resistance of the (K4) Sensor Ground circuit from the Speed Control harness connector to the appropriate terminal of special tool #8815. Is the resistance below 5.0 ohms for both measurement? Yes → NOTE: Before continuing, check the PCM harness connector terminals for corrosion, damage or terminal push out. Repair as necessary. Replace and program the Powertrain Control Module in accordance with the Service Information. Perform POWERTRAIN VERIFICATION TEST VER - 4 - NGC. No → Repair the (K4) Sensor Ground circuit for an open. Perform POWERTRAIN VERIFICATION TEST VER - 4 - NGC.	All

Symptom:

P0582-SPEED CONTROL VACUUM SOLENOID CIRCUIT

When Monitored and Set Condition:

P0582-SPEED CONTROL VACUUM SOLENOID CIRCUIT

When Monitored: Ignition on. Speed Control active.

Set Condition: The PCM detects an open or short to voltage in the Speed Control Vacuum Control circuit. One Trip Fault.

POSSIBLE CAUSES
SPEED CONTROL SOLENOID OPERATION
SPEED CONTROL VACUUM SOLENOID
(V36) S/C VACUUM SOL CONTROL CIRCUIT SHORTED TO GROUND
(V36) S/C VACUUM SOL CONTROL CIRCUIT OPEN
PCM (VACUUM SOLENOID)

TEST	ACTION	APPLICABILITY
1	Ignition on, engine not running. With the DRBIII®, read DTCs and record the related Freeze Frame data. With the DRBIII®, actuate the Speed Control Vacuum Solenoid and note operation. Does the Speed Control Vacuum Solenoid actuate properly? Yes → Refer to the INTERMITTENT CONDITION symptom in the Driveability category. Perform POWERTRAIN VERIFICATION TEST VER - 4 - NGC. No → Go To 2	All
2	Turn the ignition off. Disconnect the Speed Control Servo harness connector. Ignition on, engine not running. With the DRBIII®, actuate the Speed Control Vacuum Solenoid. Using a 12-volt test light connected to ground, probe the S/C Vacuum Control circuit. Does the test light illuminate brightly and flash? Yes → Replace the Speed Control Servo. Perform POWERTRAIN VERIFICATION TEST VER - 4 - NGC. No → Go To 3	All

P0582-SPEED CONTROL VACUUM SOLENOID CIRCUIT — Continued

TEST	ACTION	APPLICABILITY
3	Turn the ignition off. Disconnect the S/C Servo harness connector. Disconnect the PCM harness connector. **CAUTION: DO NOT PROBE THE PCM HARNESS CONNECTORS. PROBING THE PCM HARNESS CONNECTORS WILL DAMAGE THE PCM TERMINALS RESULTING IN POOR TERMINAL TO PIN CONNECTION. INSTALL MILLER SPECIAL TOOL #8815 TO PERFORM DIAGNOSIS.** Measure the resistance of the (V36) S/C Vacuum Sol Control circuit from the Speed Control Servo harness connector to the appropriate terminal of special tool # 8815. Is the resistance below 5.0 ohms? Yes → Go To 4 No → Repair the open/high resistance in the (V36) S/C Vacuum Sol Control circuit. Perform POWERTRAIN VERIFICATION TEST VER - 4 - NGC.	All
4	Turn the ignition off. Disconnect the S/C Servo harness connector. Disconnect the PCM harness connector. Measure the resistance between ground and the (V36) S/C Vacuum Solenoid Control circuit at the Speed Control Servo harness connector. Is the resistance below 100 ohms? Yes → Repair the short to ground in the (V36) S/C Vacuum Sol Control circuit. Perform POWERTRAIN VERIFICATION TEST VER - 4 - NGC. No → Go To 5	All
5	**NOTE: Before continuing, check the PCM harness connector terminals for corrosion, damage, or terminal push out. Repair as necessary.** If the there are no possible causes remaining, view repair. Repair Replace and program the Powertrain Control Module in accordance with the Service Information. Perform POWERTRAIN VERIFICATION TEST VER - 4 - NGC.	All

Symptom:

P0586-SPEED CONTROL VENT SOLENOID CIRCUIT

When Monitored and Set Condition:

P0586-SPEED CONTROL VENT SOLENOID CIRCUIT

When Monitored: Ignition on. Speed Control active.

Set Condition: The PCM detects an open or short to voltage in the Speed Control Vent Control circuit. One Trip Fault.

POSSIBLE CAUSES
SPEED CONTROL SOLENOID OPERATION
SPEED CONTROL VENT SOLENOID
(V35) S/C VENT SOL CONTROL CIRCUIT OPEN
(V35) S/C VENT SOL CONTROL CIRCUIT SHORTED TO GROUND
PCM (VENT SOLENOID)

TEST	ACTION	APPLICABILITY
1	Ignition on, engine not running. With the DRBIII®, read DTCs and record the related Freeze Frame data. With the DRBIII®, actuate the Speed Control Vent Solenoid and note operation. Does the Speed Control Vent Solenoid acutate properly? Yes → Refer to the INTERMITTENT CONDITION symptom in the Driveability category. Perform POWERTRAIN VERIFICATION TEST VER - 4 - NGC. No → Go To 2	All
2	Turn the ignition off. Disconnect the Speed Control Servo harness connector. Ignition on, engine not running. With the DRBIII®, actuate the Speed Control Vent Solenoid. Using a 12-volt test light connected to ground, probe the (V35) Speed Control Vent Solenoid Control circuit in the Speed Control Servo harness connector. Does the test light illuminate brightly and flash? Yes → Replace the Speed Control Servo. Perform POWERTRAIN VERIFICATION TEST VER - 4 - NGC. No → Go To 3	All

P0586-SPEED CONTROL VENT SOLENOID CIRCUIT — Continued

TEST	ACTION	APPLICABILITY
3	Turn the ignition off. Disconnect the S/C Servo harness connector. Disconnect the PCM harness connector. **CAUTION: DO NOT PROBE THE PCM HARNESS CONNECTORS. PROBING THE PCM HARNESS CONNECTORS WILL DAMAGE THE PCM TERMINALS RESULTING IN POOR TERMINAL TO PIN CONNECTION. INSTALL MILLER SPECIAL TOOL #8815 TO PERFORM DIAGNOSIS.** Measure the resistance of the (V35) S/C Vent Sol Control circuit from the Speed Control Servo harness connector to the appropriate terminal of special tool #8815. Is the resistance below 5.0 ohms? Yes → Go To 4 No → Repair the open/high resistance in the (V35) S/C Vent Sol Control circuit. Perform POWERTRAIN VERIFICATION TEST VER - 4 - NGC.	All
4	Turn the ignition off. Disconnect the S/C Servo harness connector. Disconnect the PCM harness connector. Measure the resistance between ground and the (V35) S/C Vent Sol Control circuit at the Speed Control Servo harness connector. Is the resistance below 100 ohms? Yes → Repair the short to ground in the (V35) Speed Control Vent Solenoid Control circuit. Perform POWERTRAIN VERIFICATION TEST VER - 4 - NGC. No → Go To 5	All
5	**NOTE: Before continuing, check the PCM harness connector terminals for corrosion, damage, or terminal push out. Repair as necessary.** If the there are no possible causes remaining, view repair. Repair Replace and program the Powertrain Control Module in accordance with the Service Information. Perform POWERTRAIN VERIFICATION TEST VER - 4 - NGC.	All

Symptom:

P0594-SPEED CONTROL SERVO POWER CIRCUIT

When Monitored and Set Condition:

P0594-SPEED CONTROL SERVO POWER CIRCUIT

When Monitored: With the ignition key on. The speed control switched on.

Set Condition: The PCM detects a open or short in the Speed Control Power Supply circuit. One Trip Fault.

POSSIBLE CAUSES
(V40) S/C BRAKE SWITCH OUTPUT CIRCUIT
(V32) S/C POWER SUPPLY CIRCUIT
(V32) S/C POWER SUPPLY CIRCUIT SHORTED TO GROUND
(V40) S/C BRAKE SWITCH OUTPUT CIRCUIT SHORTEDTO GROUND
(V40) S/C BRAKE SWITCH OUTPUT CIRCUIT OPEN
BRAKE LAMP SWITCH
PCM (S/C SOURCE CIRCUIT)

TEST	ACTION	APPLICABILITY
1	Turn the ignition off. Disconnect the Speed Control Servo harness connector. Ignition on, engine not running. **NOTE: It is necessary to PRESS and HOLD the Speed Control Switch in the ON position while checking for voltage.** Using a 12-volt test light connected to ground, probe the (V40) S/C Brake Switch Output terminal in the Servo Harness connector. Does the test light illuminate brightly? Yes → Refer to the INTERMITTENT CONDITION symptom in the Driveability category. Perform POWERTRAIN VERIFICATION TEST VER - 5 - NGC. No → Go To 2	All

P0594-SPEED CONTROL SERVO POWER CIRCUIT — Continued

TEST	ACTION	APPLICABILITY
2	Turn the ignition off. Disconnect the PCM harness connector. Disconnect the Brake Lamp Switch harness connector. **CAUTION: DO NOT PROBE THE PCM HARNESS CONNECTORS. PROBING THE PCM HARNESS CONNECTORS WILL DAMAGE THE PCM TERMINALS RESULTING IN POOR TERMINAL TO PIN CONNECTION. INSTALL MILLER SPECIAL TOOL #8815 TO PERFORM DIAGNOSIS.** Measure the resistance of the (V32) S/C Power Supply circuit from the Brake Lamp Switch harness connector to the appropriate terminal of special tool #8815. Is the resistance below 5.0 ohms? Yes → Go To 3 No → Repair the open/high resistance in the (V32) S/C Power Supply circuit between the PCM and Brake Switch. Perform POWERTRAIN VERIFICATION TEST VER - 5 - NGC.	All
3	Turn the ignition off. Disconnect the PCM harness connector. Disconnect the Brake Switch harness connector. Measure the resistance between ground and the (V32) S/C Power Supply circuit in the Brake Switch harness connector. Is the resistance below 100 ohms? Yes → Go To 4 No → Repair the short to ground in the (V32) S/C Power Supply circuit. Perform POWERTRAIN VERIFICATION TEST VER - 5 - NGC.	All
4	Turn the ignition off. Disconnect the S/C Servo harness connector. Disconnect the Brake Switch harness connector. Measure the resistance of the (V40) S/C Brake Switch Output circuit from the Brake Switch harness connector to the S/C Servo harness connector. Is the resistance below 5.0 ohms? Yes → Go To 5 No → Repair the open/high resistance in the (V40) S/C Brake Switch Output circuit. Perform POWERTRAIN VERIFICATION TEST VER - 5 - NGC.	All
5	Turn the ignition off. Disconnect the Speed Control Servo harness connector. Disconnect the Brake Switch harness connector. Measure the resistance between ground and the (V40) S/C Brake Switch Output circuit at the Speed Control Servo harness connector. Is the resistance below 100 ohms? Yes → Repair the short to ground in the (V40) S/C Brake Switch Output circuit. Perform POWERTRAIN VERIFICATION TEST VER - 5 - NGC. No → Go To 6	All

P0594-SPEED CONTROL SERVO POWER CIRCUIT — Continued

TEST	ACTION	APPLICABILITY
6	Disconnect the Brake Lamp Switch harness connector. Ignition on, engine not running. Using a 12-volt test light connected to ground, probe the (V32) Speed Control Power Supply circuit in the Brake Lamp Switch harness connector. **NOTE: It is necessary to HOLD the Cruise Control Switch in the ON position to get an accurate reading.** Does the test light illuminate brightly? Yes → Replace the Brake Lamp Switch. Perform POWERTRAIN VERIFICATION TEST VER - 5 - NGC. No → Go To 7	All
7	**NOTE: Before continuing, check the PCM harness connector terminals for corrosion, damage, or terminal push out. Repair as necessary.** If there are no possible causes remaining, view repair. Repair Replace and program the Powertrain Control Module in accordance with the Service Information. Perform POWERTRAIN VERIFICATION TEST VER - 5 - NGC.	All

Symptom List:

P0600-SERIAL COMMUNICATION LINK
P0601-INTERNAL MEMORY CHECKSUM INVALID

Test Note: All symptoms listed above are diagnosed using the same tests. The title for the tests will be P0600-SERIAL COMMUNICATION LINK.

When Monitored and Set Condition:

P0600-SERIAL COMMUNICATION LINK

When Monitored: With the ignition on.

Set Condition: Internal Bus communication failure between processors.

P0601-INTERNAL MEMORY CHECKSUM INVALID

When Monitored: With the ignition on.

Set Condition: Internal checksum for software failed, does not match calculated value.

POSSIBLE CAUSES
PCM INTERNAL OR SPI

TEST	ACTION	APPLICABILITY
1	The Powertrain Control Module is reporting internal errors, view repair to continue. Repair Replace and program the Powertrain Control Module in accordance with the Service Information. Perform POWERTRAIN VERIFICATION TEST VER - 1 - NGC.	All

Symptom:

P0622-GENERATOR FIELD CONTROL CIRCUIT

When Monitored and Set Condition:

P0622-GENERATOR FIELD CONTROL CIRCUIT

When Monitored: With the ignition on. Engine running.

Set Condition: When the PCM tries to regulate the generator field with no result during monitoring. One Trip Fault.

POSSIBLE CAUSES
GOOD TRIP EQUAL TO ZERO
GENERATOR OPERATION
(Z1) GEN FIELD GROUND CIRCUIT OPEN
(K20) GEN FIELD CONTROL CIRCUIT SHORTED TO BATTERY VOLTAGE
(K20) GEN FIELD CONTROL CIRCUIT SHORTED TO GROUND
(K20) GEN FIELD CONTROL CIRCUIT OPEN
PCM

TEST	ACTION	APPLICABILITY
1	Ignition on, engine not running. With the DRBIII®, read DTCs and record the related Freeze Frame data. Is the Good Trip Counter displayed and equal to zero? Yes → Refer to the INTERMITTENT CONDITION symptom in the Driveability category. Perform POWERTRAIN VERIFICATION TEST VER - 3 - NGC. No → Go To 2	All
2	Turn the ignition off. Disconnect the Generator Field harness connector. Using a 12-volt test light, jumper it across the Generator Field harness connector. Ignition on, engine not running. With the DRBIII®, actuate the Generator Field Driver circuit. Does the test light illuminate brightly and flash on and off? Yes → Replace the Generator. Perform POWERTRAIN VERIFICATION TEST VER - 3 - NGC. No → Go To 3	All

P0622-GENERATOR FIELD CONTROL CIRCUIT — Continued

TEST	ACTION	APPLICABILITY
3	Turn the ignition off. Disconnect the Generator Field harness connector. Using a 12-volt test connected to battery voltage, probe the (Z1) Gen Ground circuit in the Generator Field harness connector. Does the test light illuminate brightly? Yes → Go To 4 No → Repair the open in the (Z1) Gen Field Ground circuit. Perform POWERTRAIN VERIFICATION TEST VER - 3 - NGC.	All
4	Turn the ignition off. Disconnect the Generator Field harness connector. Disconnect the PCM harness connector. Measure the voltage on the (K20) Gen Field Control circuit in the Generator Field harness connector. Is the voltage above 1.0 volts? Yes → Repair the short to voltage in the (K20) Gen Field Control circuit. Perform POWERTRAIN VERIFICATION TEST VER - 3 - NGC. No → Go To 5	All
5	Turn the ignition on. Disconnect the Generator Field harness connector. Disconnect the PCM harness connector. Measure the resistance between ground and the (K20) Gen Field Control circuit in the Generator Field harness connector. Is the resistance below 100 ohms? Yes → Repair the (K20) Gen Field Control circuit for a short to ground. Perform POWERTRAIN VERIFICATION TEST VER - 3 - NGC. No → Go To 6	All
6	Turn the ignition off. Disconnect the Generator Field harness connector. Disconnect the PCM harness connector. **CAUTION: DO NOT PROBE THE PCM HARNESS CONNECTORS. PROBING THE PCM HARNESS CONNECTORS WILL DAMAGE THE PCM TERMINALS RESULTING IN POOR TERMINAL TO PIN CONNECTION. INSTALL MILLER SPECIAL TOOL #8815 TO PERFORM DIAGNOSIS.** Measure the resistance of the (K20) Gen Field Control circuit from the Generator Field harness connector to the appropriate terminal of the special tool #8815. Is the resistance below 5.0 ohms? Yes → Go To 7 No → Repair the open in the (K20) Gen Field Control circuit. Perform POWERTRAIN VERIFICATION TEST VER - 3 - NGC.	All
7	**NOTE: Before continuing, check the PCM connector terminals for corrosion, damage, or terminal push out. Repair as necessary.** If there are no possible causes remaining, view repair. Repair Replace and program the Powertrain Control Module in accordance with the Service Information. Perform POWERTRAIN VERIFICATION TEST VER - 3 - NGC.	All

Symptom:

P0627-FUEL PUMP RELAY CIRCUIT

When Monitored and Set Condition:

P0627-FUEL PUMP RELAY CIRCUIT

When Monitored: With the ignition on. Battery voltage greater than 10.4 volts.

Set Condition: An open or shorted condition is detected in the fuel pump relay control circuit. One Trip Fault.

POSSIBLE CAUSES
FUEL PUMP RELAY INTERMITTENT OPERATION
INTERMITTENT CONDITION
FUSED IGNITION SWITCH OUTPUT CIRCUIT OPEN
INTEGRATED POWER MODULE
FUEL PUMP RELAY
IPM FUSE & RELAY CENTER
FUEL PUMP RELAY CONTROL CIRCUIT OPEN
FUEL PUMP RELAY CONTROL CIRCUIT SHORT TO GROUND
PCM

TEST	ACTION	APPLICABILITY
1	Turn the ignition on. With the DRBIII®, actuate the Fuel Pump Relay. Is the Fuel Pump Relay operating? Yes → Go To 2 No → Go To 3	All
2	Turn the ignition on. With the DRBIII®, actuate the Fuel Pump Relay. Wiggle the wiring harness from the Fuel Pump Relay to the PCM while the relay is actuating. Did the Fuel Pump Relay stop when wiggling the wiring harness? Yes → Repair as necessary. Perform POWERTRAIN VERIFICATION TEST VER - 5. No → Refer to the INTERMITTENT CONDITION symptom in the Driveability category. Perform POWERTRAIN VERIFICATION TEST VER - 5.	All

P0627-FUEL PUMP RELAY CIRCUIT — Continued

TEST	ACTION	APPLICABILITY
3	Turn the ignition off. Remove the Fuel Pump Relay from the IPM. Turn the ignition on. Using a 12-volt test light connected to ground, probe the Fused Ignition Switch circuit in the IPM. Does the test light illuminate? Yes → Go To 4 No → Go To 9	All
4	Turn the ignition off. Remove the Fuel Pump Relay from the IPM. Turn the ignition on. Using a 12-volt test light connected to 12-volts, probe the Fuel Pump Relay Control circuit in the IPM. With the DRBIII®, actuate the Fuel Pump Relay. Does the test light flash on and off? Yes → Replace the Fuel Pump Relay. Perform POWERTRAIN VERIFICATION TEST VER - 5. No → Go To 5	All
5	Turn the ignition off. Disconnect the IPM C3 harness connector. Turn the ignition on. Using a 12-volt test light connected to 12-volts, probe the Fuel Pump Relay Control circuit in the IPM harness connector.. With the DRBIII®, actuate the Fuel Pump Relay. Does the test light flash on and off? Yes → Replace the IPM Fused & Relay Center. Perform POWERTRAIN VERIFICATION TEST VER - 5. No → Go To 6	All
6	Turn the ignition off. Disconnect the IPM C3 harness connector. Disconnect the PCM harness connector. Measure the resistance of the Fuel Pump Relay Control circuit between the IPM C3 harness connector and the PCM harness connector. Is the resistance below 5.0 ohms? Yes → Go To 7 No → Repair the Fuel Pump Relay Control circuit for an open. Perform POWERTRAIN VERIFICATION TEST VER - 5.	All
7	Turn the ignition off. Disconnect the IPM C3 harness connector. Disconnect the PCM harness connector. Measure the resistance of the Fuel Pump Relay Control circuit in the IPM C3 harness connector to ground. Is the resistance below 5.0 ohms? Yes → Repair the Fuel Pump Relay Control circuit for a short to ground. Perform POWERTRAIN VERIFICATION TEST VER - 5. No → Go To 8	All

P0627-FUEL PUMP RELAY CIRCUIT — Continued

TEST	ACTION	APPLICABILITY
8	If there are no possible causes remaining, view repair. Repair Replace and program the Powertrain Control Module in accordance with the Service Information. Perform POWERTRAIN VERIFICATION TEST VER - 5.	All
9	Turn the ignition off. Disconnect the IPM C9 harness connector. Turn the ignition on. Using a 12-volt test light connected to ground, probe the Fused Ignition Switch circuit in the IPM harness connector. Does the test light illuminate? Yes → Test Complete. No → Repair the Fused Ignition Switch Output circuit for an open. Perform POWERTRAIN VERIFICATION TEST VER - 5.	All

Symptom:

P0630-VIN NOT PROGRAMMED IN PCM

When Monitored and Set Condition:

P0630-VIN NOT PROGRAMMED IN PCM

When Monitored: Ignition on.

Set Condition: The VIN has not been programmed into the PCM.

POSSIBLE CAUSES
PROGRAMMING VIN INTO PCM
VERIFY PCM PROGRAMMING
PCM

TEST	ACTION	APPLICABILITY
1	Ignition on, engine not running. With the DRBIII®, erase DTCs. Using the DRBIII®, program VIN into the PCM. Start the engine. **NOTE: If the engine will not start, crank the engine over for 15 seconds. Crank at least 2 times with the ignition switch returning to the off position each time.** Allow the engine to reach normal operating temperature. With the DRBIII®, read DTCs. Does the DTC reset? Yes → Go To 2 No → The VIN has been successfully programmed into the PCM. Test is complete. Perform POWERTRAIN VERIFICATION TEST VER - 1 - NGC.	All
2	**NOTE: The ignition switch must be left in the off position for a minimum of 10 seconds.** Cycle the ignition switch to the off position and then back to run. Attempt to program the PCM with the applicable information. Start the vehicle and allow it to reach normal operating temperatures. With the DRBIII®, read DTCs. Does the DTC reset? Yes → Replace and program the Powertrain Control Module in accordance with the Service Information. Perform POWERTRAIN VERIFICATION TEST VER - 1 - NGC. No → The VIN has been successfully programmed into the PCM. Test is complete. Perform POWERTRAIN VERIFICATION TEST VER - 1 - NGC.	All

Symptom:

P0632-ODOMETER NOT PROGRAMMED IN PCM

When Monitored and Set Condition:

P0632-ODOMETER NOT PROGRAMMED IN PCM

When Monitored: Ignition on.

Set Condition: The mileage has not been programmed into the PCM.

POSSIBLE CAUSES
PROGRAMMING MILEAGE INTO PCM
VERIFY PCM PROGRAMMING
PCM

TEST	ACTION	APPLICABILITY
1	Ignition on, engine not running. With the DRBIII®, erase DTCs. Using the DRBIII®, program the mileage into the PCM. Start the engine. Allow the engine to reach normal operating temperature. With the DRBIII®, read DTCs. Does the DTC reset? Yes → Go To 2 No → The mileage has been succcessfully programmed into the PCM. Test is complete. Perform POWERTRAIN VERIFICATION TEST VER - 1 - NGC.	All
2	**NOTE: The ignition switch must be left in the off position for a minimum of 10 seconds.** Cycle the ignition switch to the off position and then back to run. Attempt to program the PCM with the applicable information. Start the vehicle and allow it to reach normal operating temperatures. With the DRBIII®, read DTCs. Does the DTC reset? Yes → Replace and program the Powertrain Control Module in accordance with the Service Information. Perform POWERTRAIN VERIFICATION TEST VER - 1 - NGC. No → The mileage has been successfully programmed into the PCM. Test is complete. Perform POWERTRAIN VERIFICATION TEST VER - 1 - NGC.	All

Symptom:

P0633-SKIM KEY NOT PROGRAMMED IN PCM

When Monitored and Set Condition:

P0633-SKIM KEY NOT PROGRAMMED IN PCM

When Monitored: Ignition on.

Set Condition: The SKREEM Key information has not been programmed into the PCM.

POSSIBLE CAUSES
PROGRAMMING SKIM KEY INTO PCM
VERIFY PCM PROGRAMMING
PCM

TEST	ACTION	APPLICABILITY
1	Ignition on, engine not running. With the DRBIII®, erase DTCs. Using the DRBIII®, program the SKREEM Key information into the PCM. Start the engine. **NOTE: If the engine will not start, crank the engine over for 15 seconds. Crank at least 2 times with the ignition switch returning to the off position each time.** Allow the engine to reach normal operating temperature. With the DRBIII®, read DTCs. Does the DTC reset? Yes → Go To 2 No → The SKREEM KEY information has been succcessfully programmed into the PCM. Test is complete. Perform SKREES VERIFICATION.	All
2	**NOTE: The ignition switch must be left in the off position for a minimum of 10 seconds.** Cycle the ignition switch to the off position and then back to run. Attempt to program the PCM with the applicable information. Start the vehicle and allow it to reach normal operating temperatures. With the DRBIII®, read DTCs. Does the DTC reset? Yes → Replace and program the Powertrain Control Module in accordance with the Service Information. Perform SKREES VERIFICATION. No → The SKREEM Key Information has been successfully programmed into the PCM. Test is complete. Perform SKREES VERIFICATION.	All

Symptom:

P0645-A/C CLUTCH RELAY CIRCUIT

When Monitored and Set Condition:

P0645-A/C CLUTCH RELAY CIRCUIT

When Monitored: With the ignition on. Battery voltage greater than 10 volts. A/C Switch on.

Set Condition: An open or shorted condition is detected in the A/C clutch relay control circuit. One Trip Fault.

POSSIBLE CAUSES
A/C CLUTCH RELAY INTERMITTENT OPERATION
INTERMITTENT CONDITION
FUSED IGNITION SWITCH OUTPUT CIRCUIT OPEN
INTEGRATED POWER MODULE
A/C CLUTCH RELAY
IPM FUSE & RELAY CENTER
A/C CLUTCH RELAY CONTROL CKT OPEN
A/C CLUTCH RELAY CONTROL CIRCUIT SHORT TO GROUND
PCM

TEST	ACTION	APPLICABILITY
1	Turn the ignition on. With the DRBIII®, actuate the A/C Clutch Relay. Is the A/C Clutch Relay operating? Yes → Go To 2 No → Go To 3	All
2	Turn the ignition on. With the DRBIII®, actuate the A/C Clutch Relay. Wiggle the wiring harness from the A/C Clutch Relay to the PCM while the relay is actuating. Did the A/C Clutch Relay stop when wiggling the wiring harness? Yes → Repair as necessary. Perform POWERTRAIN VERIFICATION TEST VER - 5. No → Refer to the INTERMITTENT CONDITION symptom in the Driveability category. Perform POWERTRAIN VERIFICATION TEST VER - 5.	All

P0645-A/C CLUTCH RELAY CIRCUIT — Continued

TEST	ACTION	APPLICABILITY
3	Turn the ignition off. Remove the A/C Clutch Relay from the IPM. Turn the ignition on. Using a 12-volt test light connected to ground, probe the Fused Ignition Switch circuit in the IPM. Does the test light illuminate? Yes → Go To 4 No → Go To 9	All
4	Turn the ignition off. Remove the A/C Clutch Relay from the IPM. Turn the ignition on. Using a 12-volt test light connected to 12-volts, probe the A/C Clutch Relay circuit in the IPM. With the DRBIII®, actuate the A/C Clutch Relay. Does the test light flash on and off? Yes → Replace the A/C Clutch Relay. Perform POWERTRAIN VERIFICATION TEST VER - 5. No → Go To 5	All
5	Turn the ignition off. Disconnect the IPM C3 harness connector. Turn the ignition on. Using a 12-volt test light connected to 12-volts, probe the A/C Clutch Relay Control circuit in the IPM harness connector. With the DRBIII®, actuate the A/C Clutch Relay. Does the test light flash on and off? Yes → Replace the IPM Fused & Relay Center. Perform POWERTRAIN VERIFICATION TEST VER - 5. No → Go To 6	All
6	Turn the ignition off. Disconnect the IPM C3 harness connector. Disconnect the PCM harness connector. Measure the resistance of the A/C Clutch Relay Control circuit between the IPM C3 harness connector and the PCM harness connector. Is the resistance below 5.0 ohms? Yes → Go To 7 No → Repair the A/C Clutch Relay Control circuit for an open. Perform POWERTRAIN VERIFICATION TEST VER - 5.	All
7	Turn the ignition off. Disconnect the IPM C3 harness connector. Disconnect the PCM harness connector. Measure the resistance of the A/C Clutch Relay Control circuit in the IPM C3 harness connector to ground. Is the resistance below 5.0 ohms? Yes → Repair the A/C Clutch Relay Control circuit for a short to ground. Perform POWERTRAIN VERIFICATION TEST VER - 5. No → Go To 8	All

P0645-A/C CLUTCH RELAY CIRCUIT — Continued

TEST	ACTION	APPLICABILITY
8	If there are no possible causes remaining, view repair. Repair Replace and program the Powertrain Control Module Module in accordance with the Service Information. Perform POWERTRAIN VERIFICATION TEST VER - 5.	All
9	Turn the ignition off. Disconnect the IPM C3 harness connector. Turn the ignition on. Using a 12-volt test light connected to ground, probe the Fused Ignition Switch circuit in the IPM harness connector. Does the test light illuminate? Yes → Replace the IPM Fuse & Relay Center. Perform POWERTRAIN VERIFICATION TEST VER - 5. No → Repair the Fused Ignition Switch Output circuit for an open. Perform POWERTRAIN VERIFICATION TEST VER - 5.	All

Symptom:

P0685-ASD RELAY CONTROL CIRCUIT

When Monitored and Set Condition:

P0685-ASD RELAY CONTROL CIRCUIT

When Monitored: With ignition on. Battery voltage above 10 volts.

Set Condition: An open or shorted condition is detected in the ASD relay control circuit. One trip Fault.

POSSIBLE CAUSES
ASD RELAY INTERMITTENT OPERATION
INTERMITTENT CONDITION
FUSED B+ OUTPUT CIRCUIT
ASD RELAY
IPM FUSE & RELAY CENTER
ASD RELAY CONTROL CIRCUIT OPEN
ASD RELAY CONTROL CIRCUIT SHORT TO GROUND
PCM

TEST	ACTION	APPLICABILITY
1	Turn the ignition on. With the DRBIII®, actuate the ASD Relay. Is the ASD Relay operating? Yes → Go To 2 No → Go To 3	All
2	Turn the ignition on. With the DRBIII®, actuate the ASD Relay. Wiggle the wiring harness from the ASD Relay to the PCM while the relay is actuating. Did the ASD Relay stop when wiggling the wiring harness? Yes → Repair as necessary. Perform POWERTRAIN VERIFICATION TEST VER - 5. No → Refer to the INTERMITTENT CONDITION symptom in the Driveability category. Perform POWERTRAIN VERIFICATION TEST VER - 5.	All

P0685-ASD RELAY CONTROL CIRCUIT — Continued

TEST	ACTION	APPLICABILITY
3	**NOTE: Inspect the ASD Relay fuse located in the IPM. If the ASD Relay fuse is open, repair the cause of the open first before continuing. Inspect the ASD Relay Output circuit for a short to ground for the cause of the open fuse.** Turn the ignition off. Remove the ASD Relay from the IPM. Turn the ignition on. Using a 12-volt test light connected to ground, probe the Fused B+ circuit in the IPM. Does the test light illuminate? Yes → Go To 4 No → Replace the IPM Fuse & Relay Center. Perform POWERTRAIN VERIFICATION TEST VER - 5.	All
4	Turn the ignition off. Remove the ASD Relay from the IPM. Turn the ignition on. Using a 12-volt test light connected to 12-volts, probe the ASD Relay Control circuit in the IPM. With the DRBIII®, actuate the ASD Relay. Does the test light flash on and off? Yes → Replace the ASD Relay. Perform POWERTRAIN VERIFICATION TEST VER - 5. No → Go To 5	All
5	Turn the ignition off. Disconnect the IPM C3 harness connector. Turn the ignition on. Using a 12-volt test light connected to 12-volts, probe the ASD Relay Control circuit in the IPM harness connector. With the DRBIII®, actuate the ASD Relay. Does the test light flash on and off? Yes → Replace the IPM Fused & Relay Center. Perform POWERTRAIN VERIFICATION TEST VER - 5. No → Go To 6	All
6	Turn the ignition off. Disconnect the IPM C3 harness connector. Disconnect the PCM harness connector. Measure the resistance of the ASD Relay Control circuit between the IPM C3 harness connector and the PCM harness connector. Is the resistance below 5.0 ohms. Yes → Go To 7 No → Repair the ASD Relay Control circuit for an open. Perform POWERTRAIN VERIFICATION TEST VER - 5.	All

P0685-ASD RELAY CONTROL CIRCUIT — Continued

TEST	ACTION	APPLICABILITY
7	Turn the ignition off. Disconnect the IPM C3 harness connector. Disconnect the PCM harness connector. Measure the resistance of the ASD Relay Control circuit in the IPM C3 harness connector to ground. Is the resistance below 5.0 ohms. Yes → Repair the ASD Relay Control circuit for a short to ground. Perform POWERTRAIN VERIFICATION TEST VER - 5. No → Go To 8	All
8	If there are no possible causes remaining, view repair. Repair Replace and program the Powertrain Control Module Module in accordance with the Service Information. Perform POWERTRAIN VERIFICATION TEST VER - 5.	All

Symptom:

P0688-ASD RELAY SENSE CIRCUIT LOW

When Monitored and Set Condition:

P0688-ASD RELAY SENSE CIRCUIT LOW

When Monitored: With ignition key on. Battery voltage greater than 10 volts.

Set Condition: No voltage sensed at the PCM when the ASD relay is energized. One Trip Fault.

POSSIBLE CAUSES
ASD RELAY
FUSED B+ CIRCUIT
ASD RELAY OUTPUT CIRCUIT OPEN (NO START)
IPM FUSE & RELAY CENTER
ASD RELAY OUTPUT CIRCUIT OPEN
PCM START
PCM

TEST	ACTION	APPLICABILITY
1	**NOTE: Inspect the ASD Relay fuse located in the IPM. If the ASD Relay fuse is open, repair the cause of the open first before continuing. Inspect the ASD Relay Output circuit for a short to ground for the cause of the open fuse.** **NOTE: Diagnose P685 - Auto Shutdown Relay Control Circuit first if set along with this DTC.** With the DRBIII®, erase the DTC. Attempt to start the engine. If the engine will not start, crank the engine for at least 15 seconds. It may be necessary to repeat several times. Does the DTC reset. Yes → Go To 2 No →	All
2	Attempt to start the engine. Does the engine start. Yes → Go To 3 No → Go To 5	All

P0688-ASD RELAY SENSE CIRCUIT LOW — Continued

TEST	ACTION	APPLICABILITY
3	Turn the ignition off. Disconnect the PCM harness connector. Disconnect the IPM C4 harness connector Measure the resistance of the ASD Output circuit between the IPM harness connector and the PCM harness connector. Is the resistance below 5.0 ohms? Yes → Go To 4 No → Repair the ASD Relay Output circuit for an open. Perform POWERTRAIN VERIFICATION TEST VER - 5.	All
4	If there are no possible causes remaining, view repair. Repair Replace and program the Powertrain Control Module in accordance with the Service Information. Perform POWERTRAIN VERIFICATION TEST VER - 5.	All
5	Turn the ignition off. Install a substitute relay in place of the ASD Relay. With the DRBIII®, erase DTCs. Attempt to start the engine. With the DRBIII®, read DTCs. Does the DTC reset? Yes → Go To 6 No → Replace the ASD Relay. Perform POWERTRAIN VERIFICATION TEST VER - 5.	All
6	Turn the ignition off. Remove the ASD Relay from the IPM. Using a 12-volt test light connected to ground, probe the Fused B+ circuit in the IPM. Does the test light illuminate? Yes → Go To 7 No → Replace the IPM Fuse & Relay Center. Perform POWERTRAIN VERIFICATION TEST VER - 5.	All
7	Turn the ignition off. Remove the ASD Relay from the IPM. Disconnect the PCM harness connector. Disconnect the IPM C4 harness connector. Measure the resistance of the ASD Relay Output circuit between the IPM harness connector and the PCM harness connector. Is the resistance below 5.0 ohms. Yes → Go To 8 No → Repair the ASD Relay Output circuit for an open. Perform POWERTRAIN VERIFICATION TEST VER - 5.	All

P0688-ASD RELAY SENSE CIRCUIT LOW — Continued

TEST	ACTION	APPLICABILITY
8	**NOTE: Ensure the IPM C4 harness connector is connected to the IPM.** Turn the ignition off. Disconnect the PCM harness connector. Measure the resistance of the ASD Relay Output circuit between the IPM and the PCM harness connector. Is the resistance below 5.0 ohms? Yes → Replace and program the Powertrain Control Module in accordance with the Service Information. Perform POWERTRAIN VERIFICATION TEST VER - 5. No → Replace the IPM Fuse & Relay Center. Perform POWERTRAIN VERIFICATION TEST VER - 5.	All

Symptom:

P0700-TRANSMISSION CONTROL SYSTEM/READ TRANSMISSION DTCS ON THE DRBIII®

TEST	ACTION	APPLICABILITY
1	This is an informational DTC letting you know that a DTC(s) is stored in the Transmission Control Module. Erase this DTC from the PCM after all Transmission DTC(s) have been repaired. Using the DRBIII®, read the Transmission Controller DTC and refer to the Transmission Category and perform the appropriate symptom. PCM Diagnostic Information complete. Continue Test Complete.	All

Symptom:

P0833-CLUTCH RELEASED SWITCH CIRCUIT

When Monitored and Set Condition:

P0833-CLUTCH RELEASED SWITCH CIRCUIT

When Monitored: During crank or when engine speed is between 1500-2880 RPM and vehicle speed is greater than 25 MPH.

Set Condition: A short to ground is detected during startup. An open circuit is detected when engine Speed is between 1500-2880 RPM, vehicle speed is >25 MPH, and delta throttle is >1.1 volts for 4 seconds. This cycle must repeat 5 times per trip for 2 trips.

POSSIBLE CAUSES
CLUTCH PEDAL POSITION SWITCH OPERATION
CLUTCH PEDAL POSITION SWITCH
CLUTCH UPSTOP SIGNAL CIRCUIT OPEN
CLUTCH UPSTOP SIGNAL CIRCUIT SHORTED TO GROUND
GROUND CIRCUIT
PCM

TEST	ACTION	APPLICABILITY
1	With the DRBIII®, monitor the Clutch Upstop Switch. Depress the Clutch Pedal completely to the floor and release all the way up several times. Did the Clutch Upstop Switch state change open to closed? Yes → Refer to the INTERMITTENT CONDITION symptom in the Driveability category. Perform POWERTRAIN VERIFICATION TEST VER - 5 - NGC. No → Go To 2	All
2	Disconnect the Clutch Pedal Position Switch harness connector. Connect a jumper wire between the Ground circuit and the Clutch Upstop Switch Signal circuit in the Clutch Pedal Position Switch harness connector. With the DRBIII®, monitor the Clutch Upstop Switch status. Did the Clutch Upstop Switch status change from Open to Closed? Yes → Replace the Clutch Pedal Position Switch. Perform POWERTRAIN VERIFICATION TEST VER - 5 - NGC. No → Go To 3	All

P0833-CLUTCH RELEASED SWITCH CIRCUIT — Continued

TEST	ACTION	APPLICABILITY
3	Turn the ignition off. Disconnect the Clutch Pedal Position Switch harness connector. Disconnect the PCM harness connector. Measure the resistance of the Clutch Upstop Signal circuit in the Clutch Pedal Position Switch harness connector to ground. Is the resistance below 100 ohms? Yes → Repair the Clutch Upstop circuit for a short to ground. Perform POWERTRAIN VERIFICATION TEST VER - 5 - NGC. No → Go To 4	All
4	Turn the ignition off. Disconnect the Clutch Pedal Position Switch harness connector. Disconnect the PCM harness connector. **CAUTION: DO NOT PROBE THE PCM HARNESS CONNECTORS. PROBING THE PCM HARNESS CONNECTORS WILL DAMAGE THE PCM TERMINALS RESULTING IN POOR TERMINAL TO PIN CONNECTION. INSTALL MILLER SPECIAL TOOL #8815 TO PERFORM DIAGNOSIS.** Measure the resistance of the Clutch Upstop Signal circuit between the Clutch Pedal Position Switch harness connector and the appropriate terminal of special tool #8815. Is the resistance below 5.0 ohms? Yes → Go To 5 No → Repair the Clutch Upstop Signal circuit for an open. Perform POWERTRAIN VERIFICATION TEST VER - 5 - NGC.	All
5	Turn the ignition off. Disconnect Clutch Pedal Position Switch harness connector. Using a 12-volt test light connected to 12-volts, probe the ground circuit in the Clutch Pedal Position Switch harness connector. Does the test light illuminate brightly? Yes → Go To 6 No → Repair the ground circuit for an open. Perform POWERTRAIN VERIFICATION TEST VER - 5 - NGC.	All
6	If there are no possible causes remaining, view repair. Repair Replace and program the Powertrain Control Module in accordance with the Service Information. Perform POWERTRAIN VERIFICATION TEST VER - 5 - NGC.	All

Symptom:
P0850-PARK/NEUTRAL SWITCH PERFORMANCE

When Monitored and Set Condition:

P0850-PARK/NEUTRAL SWITCH PERFORMANCE

When Monitored: Continuously with the transmission in Park, Neutral, or Drive and NOT in Limp-in mode.

Set Condition: The PCM detects an incorrect Park/Neutral switch state for a given mode of vehicle operation. Two Trip Fault.

POSSIBLE CAUSES
GOOD TRIP EQUAL TO ZERO
TRANSMISSION DTC(S)
PCM

TEST	ACTION	APPLICABILITY
1	**NOTE: Check the TCM for DTCs. Diagnose any DTCs related to the TRS that may have set in the TCM.** Ignition on, engine not running. **NOTE: Before continuing, ensure that communication can be established with the TCM. If the DRBIII® can not communicate with the TCM refer to the Communication Category and preform the appropriate symptom.** With the DRBIII®, read PCM DTCs and record the related Freeze Frame data. Is the Good Trip displayed and equal to zero? Yes → Go To 2 No → Refer to the INTERMITTENT CONDITION symptom in the Driveability category. Perform POWERTRAIN VERIFICATION TEST VER - 5 - NGC.	All
2	Turn the ignition on. With the DRBIII®, check the Transmission DTCs. Are there any Transmission DTCs present? Yes → Refer to the appropriate Transmission DTC in the Transmission category. Perform POWERTRAIN VERIFICATION TEST VER - 5 - NGC. No → NOTE: Before continuing, check the PCM harness connector terminals for corrosion, damage, or terminal push out. Repair as necessary. Replace and program the Powertrain Module in accordance with the Service Information. Perform POWERTRAIN VERIFICATION TEST VER - 5 - NGC.	All

Symptom:
P1115-GENERAL TEMP SENSOR PERFORMANCE

When Monitored and Set Condition:

P1115-GENERAL TEMP SENSOR PERFORMANCE

When Monitored: Engine off time is greater than 480 minutes. Ambient temperature is greater than -23°C (-10°F).

Set Condition: After a calibrated amount of cool down time, the PCM compares the ECT Sensor, IAT Sensor and the Ambient Air Temperature Sensor values. If the (AAT and IAT), (AATand ECT) and (ECT and IAT) are all less than a calibrated value, then the DTC will set.

POSSIBLE CAUSES
GOOD TRIP EQUAL TO ZERO
OTHER POSSIBLE CAUSES
SIGNAL CIRCUIT SHORTED TO BATTERY VOLTAGE
TEMPERATURE SENSOR VOLTAGE BELOW 1.0 VOLT
SIGNAL CIRCUIT OPEN
SENSOR GROUND CIRCUIT OPEN
SIGNAL CIRCUIT SHORTED TO GROUND
SIGNAL CIRCUIT SHORTED TO SENSOR GROUND
PCM LOW
PCM HIGH

TEST	ACTION	APPLICABILITY
1	**NOTE: NOTE:Due to the fact that the PCM compares the IAT, AAT and ECT sensors to see if they are within a calibrated temp of one another, the use of a block heater can cause false readings for the PCM. Check with the customer to see if they use a block h** Ignition on, engine not running. **NOTE: It is possible that more then one temperature sensor caused this DTC to set. After a repair has been made the remaining temperature sensors must be checked using the DRB temperature probe.** With the DRBIII®, read DTCs and record the related Freeze Frame data. Is the Good Trip displayed and equal to zero? Yes → Go To 2 No → Refer to the INTERMITTENT CONDITION symptom in the Driveability category. Perform POWERTRAIN VERIFICATION TEST VER - 5 - NGC.	All

P1115-GENERAL TEMP SENSOR PERFORMANCE — Continued

TEST	ACTION	APPLICABILITY
2	Turn the ignition on. With the DRBIII®, read and record the AAT Sensor Temperature value Using the DRB Temperature Probe #CH7050, measure the ambient air temperature near the AAT sensor. Is the AAT Sensor value with -15°C (5°F) of the temperature probe reading? Yes → Go To 3 No → Go To 6	All
3	Turn the ignition on. With the DRBIII®, read and record the IAT Sensor Temperature value Remove the IAT sensor. Using the DRB Temperature Probe #CH7050, measure the temperature inside the IAT sensor opening. Is the IAT Sensor value within -15°C (5°F) of the temperature probe reading? Yes → Go To 4 No → Go To 6	All
4	**WARNING: MAKE SURE THE ENGINE COOLING SYSTEM IS COOL BEFORE REMOVING THE PRESSURE CAP OR ANY HOSE. SEVERE PERSONAL INJURY MAY RESULT FROM ESCAPING HOT COOLANT. THE COOLING SYSTEM IS PRESSURIZED WHEN HOT.** Turn the ignition on. With the DRBIII®, read and record the ECT Sensor Temperature value Using the DRB Temperature Probe #CH7050, measure the engine coolant temperature. Is the ECT Sensor value with -15°C (5°F) of the temperature probe reading? Yes → Go To 5 No → Go To 6	All
5	Inspect the Temperature sensors for any physical damage. Inspect the engine coolant. Ensure the coolant is at the proper level. Refer to the Service Information COOLING. Ensure the Temperature sensors are properly mounted. **WARNING: WHEN THE ENGINE IS OPERATING, DO NOT STAND IN A DIRECT LINE WITH THE FAN. DO NOT PUT YOUR HANDS NEAR THE PULLEYS, BELTS OR FAN. DO NOT WEAR LOOSE CLOTHING.** Refer to any Technical Service Bulletins (TSBs) that may apply. With the engine running at normal operating temperature, monitor the Temperature sensor parameters while wiggling the wire harness. Look for parameter values to change. Visually inspect the related wire harness. Look for any chafed, pierced, pinched, partially broken wires and broken, bent, pushed out, or corroded terminals. **CAUTION: NEVER PROBE THE PCM HARNESS CONNECTORS. PROBING THE PCM HARNESS CONNECTORS WILL DAMAGE THE PCM TERMINALS RESULTING IN POOR TERMINAL TO PIN CONNECTION. INSTALL MILLER SPECIAL TOOL #8815 TO PERFORM DIAGNOSIS.** Inspect and clean all PCM, engine, and chassis grounds. Were any problems found during the above inspections? Yes → Repair as necessary Perform POWERTRAIN VERIFICATION TEST VER - 5 - NGC. No → Test Complete.	All

P1115-GENERAL TEMP SENSOR PERFORMANCE — Continued

TEST	ACTION	APPLICABILITY
6	**NOTE: Visually inspect both the component and the PCM connectors. Look for damage, partially broken wires and backed out or corroded terminals** Turn the ignition off. Disconnect the applicable Temperature Sensor harness connector. Ignition on, engine not running. Measure the voltage of the Signal circuit in the applicable Temperature Sensor harness connector. Is the voltage above 5.2 volts? Yes → Repair the short to battery voltage in the Signal circuit. Perform POWERTRAIN VERIFICATION TEST VER - 5 - NGC. No → Go To 7	All
7	Turn the ignition off. Disconnect the applicable Temperature Sensor harness connector. Ignition on, engine not running. With the DRBIII®, read the Temperature Sensor voltage. Is the voltage above 4.6 volts? Yes → Go To 8 No → Go To 11	All
8	Turn the ignition off. Disconnect the applicable Temperature Sensor harness connector. Using a jumper wire, jumper across the Temperature Sensor harness connector. Ignition on, engine not running. With the DRBIII®, read the Temperature voltage. Is the voltage below 1.0 volt? Yes → Replace the applicable Temperature Sensor. Perform POWERTRAIN VERIFICATION TEST VER - 5 - NGC. No → Go To 9	All
9	Turn the ignition off. Disconnect the applicable Temperature Sensor harness connector. Disconnect the PCM harness connector. **CAUTION: DO NOT PROBE THE PCM HARNESS CONNECTORS. PROBING THE PCM HARNESS CONNECTORS WILL DAMAGE THE PCM TERMINALS RESULTING IN POOR TERMINAL TO PIN CONNECTION. INSTALL MILLER SPECIAL TOOL #8815 TO PERFORM DIAGNOSIS.** Measure the resistance of the Signal circuit from the Temperature Sensor harness connector to the appropriate terminal of special tool #8815. Is the resistance below 5.0 ohms? Yes → Go To 10 No → Repair the open in the Signal circuit. Perform POWERTRAIN VERIFICATION TEST VER - 5 - NGC.	All

P1115-GENERAL TEMP SENSOR PERFORMANCE — Continued

TEST	ACTION	APPLICABILITY
10	Turn the ignition off. Disconnect the applicable Temperature Sensor harness connector. Disconnect the PCM harness connector. **CAUTION: DO NOT PROBE THE PCM HARNESS CONNECTORS. PROBING THE PCM HARNESS CONNECTORS WILL DAMAGE THE PCM TERMINALS RESULTING IN POOR TERMINAL TO PIN CONNECTION. INSTALL MILLER SPECIAL TOOL #8815 TO PERFORM DIAGNOSIS.** Measure the resistance of the Sensor ground circuit from the Ambient Air Temperature Sensor harness connector to the appropriate terminal of special tool #8815. Is the resistance below 5.0 ohms? Yes → NOTE: Before continuing, check the PCM harness connector terminals for corrosion, damage, or terminal push out. Repair as necessary. Replace and program the Powertrain Contorl Module in accordance with the Service Information. Perform POWERTRAIN VERIFICATION TEST VER - 5 - NGC. No → Repair the open in the Sensor ground circuit. Perform POWERTRAIN VERIFICATION TEST VER - 5 - NGC.	All
11	Turn the ignition off. Disconnect the applicable Temperature Sensor harness connector. Disconnect the PCM harness connector. Measure the resistance between ground and the Signal circuit in the Temperature harness connector. Is the resistance below 100 ohms? Yes → Repair the short to ground in the Signal circuit. Perform POWERTRAIN VERIFICATION TEST VER - 5 - NGC. No → Go To 12	All
12	Turn the ignition off. Disconnect the applicable Temperature Sensor harness connector. Disconnect the PCM harness connector. Measure the resistance between the Signal circuit and the Sensor ground circuit in the Temperature Sensor harness connector. Is the resistance below 100 ohms? Yes → Repair the Sensor ground shorted to the Signal circuit. Perform POWERTRAIN VERIFICATION TEST VER - 5 - NGC. No → NOTE: Before continuing, check the PCM harness connector terminals for corrosion, damage or terminal push out. Repair as necessary. Replace and program the Powertrain Control Module in accordance with the Service Information. Perform POWERTRAIN VERIFICATION TEST VER - 5 - NGC.	All

Symptom:

P1593-SPEED CONTROL SWITCH STUCK

When Monitored and Set Condition:

P1593-SPEED CONTROL SWITCH STUCK

When Monitored: Ignition on.

Set Condition: S/C Switch is mechanically stuck in the On/Off, Resume/Accel, or Set position for too long. One trip fault.

POSSIBLE CAUSES
SPEED CONTROL SWITCH STATUS
SPEED CONTROL SWITCHES
(V37) S/C SIGNAL CIRCUIT SHORTED TO BATTERY VOLTAGE
(V37) S/C SIGNAL CIRCUIT OPEN
(K4) SENSOR GROUND OPEN
PCM

TEST	ACTION	APPLICABILITY
1	Start the engine. With the DRBIII®, monitor each switch function for the Speed Control Switches. Press and release each Speed Control Button. - Resume/Accel - Cancel - Decel (Coast) - On/Off - Set Does each switch function change status when pressing and then depressing each switch? Yes → Refer to the INTERMITTENT CONDITION Symptom in the Diagnostic category. Perform POWERTRAIN VERIFICATION TEST VER - 4 - NGC. No → Go To 2	All

P1593-SPEED CONTROL SWITCH STUCK — Continued

TEST	ACTION	APPLICABILITY
2	Turn the ignition off. Remove the Speed Control Switches from the steering wheel. Measure the resistance across each Switch Control Switch. Monitor the ohmmeter while pressing each function button on each switch. Resume/Accel - 15,400 ohms Cancel - 909 +/- 9 ohms Decel (Coast) - 2940 +/- 30 ohms On/Off - 0 ohms Set - 6650 +/- 66 ohms Does the function on the Speed Control Switches have the correct resistance value? Yes → Go To 3 No → Replace the Speed Control Switch that had the incorrect resistance value. Perform POWERTRAIN VERIFICATION TEST VER - 4 - NGC.	All
3	Measure the voltage on the (V37) S/C Signal circuit at the Speed Control harness connector. Is the is the voltage above 5.0 volts? Yes → Repair the short to battery voltage in the (V37) S/C Signal circuit. Perform POWERTRAIN VERIFICATION TEST VER - 4 - NGC. No → Go To 4	All
4	**NOTE: The measurement must be taken from both Speed Control Switch harness connector.** **CAUTION: DO NOT PROBE THE PCM HARNESS CONNECTORS. PROBING THE PCM HARNESS CONNECTORS WILL DAMAGE THE PCM TERMINALS RESULTING IN POOR TERMINAL TO PIN CONNECTION. INSTALL MILLER SPECIAL TOOL #8815 TO PERFORM DIAGNOSIS.** Measure the resistance of the (V37) S/C Signal circuit from the Speed Control harness connector to the appropriate terminal of special tool #8815. Is the resistance below 5.0 ohms for both measurement? Yes → Go To 5 No → Repair the open in the (V37) S/C Signal circuit. Perform POWERTRAIN VERIFICATION TEST VER - 4 - NGC.	All
5	**NOTE: The measurement must be taken from both Speed Control Switch harness connectors.** **CAUTION: DO NOT PROBE THE PCM HARNESS CONNECTORS. PROBING THE PCM HARNESS CONNECTORS WILL DAMAGE THE PCM TERMINALS RESULTING IN POOR TERMINAL TO PIN CONNECTION. INSTALL MILLER SPECIAL TOOL #8815 TO PERFORM DIAGNOSIS.** Measure the resistance of the (K4) Sensor ground circuit from the Speed Control harness connector to the appropriate terminal of special tool #8815. Is the resistance below 5.0 ohms for both measurements? Yes → Go To 6 No → Repair the open in the (K4) Sensor ground circuit. Perform POWERTRAIN VERIFICATION TEST VER - 4 - NGC.	All

P1593-SPEED CONTROL SWITCH STUCK — Continued

TEST	ACTION	APPLICABILITY
6	**NOTE: Before continuing, check the PCM harness connector terminals for corrosion, damage or terminal push out. Repair as necessary.** Using the schematics as a guide, inspect the wire harness and connectors. Pay particular attention to all Power and Ground circuits. If there are no possible causes remaining, view repair. Repair Replace and program the Powertrain Control Module per Service Information. Perform POWERTRAIN VERIFICATION TEST VER - 4 - NGC.	All

Symptom:

P1602-PCM NOT PROGRAMMED

When Monitored and Set Condition:

P1602-PCM NOT PROGRAMMED

When Monitored: Ignition on.

Set Condition: The PCM has not been programmed.

POSSIBLE CAUSES
PCM NOT PROGRAMMED
VERIFY PCM PROGRAMMING
PCM

TEST	ACTION	APPLICABILITY
1	Ignition on, engine not running. With the DRBIII®, erase DTCs. With the DRBIII® program the PCM. Start the engine. Allow the engine to reach normal operating temperature. With the DRBIII®, read DTCs. Does the DTC reset? Yes → Go To 2 No → The PCM has been successfully programmed. Test is complete. Perform POWERTRAIN VERIFICATION TEST VER - 1 - NGC.	All
2	**NOTE: The ignition switch must be left in the off position for a minimum of 10 seconds.** Cycle the ignition switch to the off position and then back to run. Attempt to program the PCM. Start the vehicle and allow it to reach normal operating temperatures. With the DRBIII®, read DTCs. Does the DTC reset? Yes → Replace and program the Powertrain Control Module in accordance with the Service Information. Perform POWERTRAIN VERIFICATION TEST VER - 1 - NGC. No → The PCM has been successfully programmed into the PCM. Test is complete. Perform POWERTRAIN VERIFICATION TEST VER - 1 - NGC.	All

Symptom List:

P1603-PCM INTERNAL DUAL-PORT RAM COMMUNICATION
P1604-PCM INTERNAL DUAL-PORT RAM READ/WRITE INTEGRITY FAILURE
P1607-PCM INTERNAL SHUTDOWN TIMER RATIONALITY

Test Note: All symptoms listed above are diagnosed using the same tests. The title for the tests will be P1603-PCM INTERNAL DUAL-PORT RAM COMMUNICATION.

When Monitored and Set Condition:

P1607-PCM INTERNAL SHUTDOWN TIMER RATIONALITY

When Monitored: During cold start.

Set Condition: Compares shut down time to coolant temperature.

POSSIBLE CAUSES
FUSED IGNITION SWITCH OUTPUT (OFF-RUN-START)
PCM INTERNAL FAULURE

TEST	ACTION	APPLICABILITY
1	Turn the ignition off. Disconnect the PCM harness connector. **CAUTION: DO NOT PROBE THE PCM HARNESS CONNECTORS. PROBING THE PCM HARNESS CONNECTORS WILL DAMAGE THE PCM TERMINALS RESULTING IN POOR TERMINAL TO PIN CONNECTION. INSTALL MILLER SPECIAL TOOL #8815 TO PERFORM DIAGNOSIS.** Turn the ignition to run. Using a 12-volt test light connected to ground, probe the Fused Ignition Switch Output (Off-Run-Start) cavity C1-12 circuit at the appropriate terminal of the special tool #8815. **NOTE: If the test light illuminates, wiggle the wiring harness to ensure that the problem is not an intermittent wiring problem.** Does the test light illuminate brightly? Yes → Replace the Powertrain Control Module in accordance with the Service Information. Perform POWERTRAIN VERIFICATION TEST VER - 1 - NGC. No → Check all related fuses. Repair the Fused Ignition Switch Output circuit. Perform POWERTRAIN VERIFICATION TEST VER - 1 - NGC.	All

Symptom List:

P1696-EEPROM MEMORY WRITE DENIED/INVALID
P1697-EMR (SRI) MILEAGE NOT STORED

Test Note: All symptoms listed above are diagnosed using the same tests. The title for the tests will be P1696-EEPROM MEMORY WRITE DENIED/INVALID.

When Monitored and Set Condition:

P1696-EEPROM MEMORY WRITE DENIED/INVALID

When Monitored: Ignition key on continuous.

Set Condition: An attempt to program/write to the internal EEPROM failed. Also checks at powerdown.

P1697-EMR (SRI) MILEAGE NOT STORED

When Monitored: Ignition key on continuous.

Set Condition: An attempt to program/write to the internal EEPROM failed. Also checks at powerdown.

POSSIBLE CAUSES
DRB DISPLAYS WRITE FAILURE
DRB DISPLAYS WRITE REFUSED 2ND TIME
DRB DISPLAYS SRI MILEAGE INVALID
COMPARE SRI MILEAGE WITH ODOMETER

TEST	ACTION	APPLICABILITY
1	With the DRBIII®, perform the SRI Memory Test. Does the DRBIII® display Write Failure? Yes → Replace and program the Powertrain Control Module in accordance with the Service Information. Perform POWERTRAIN VERIFICATION TEST VER - 1 - NGC. No → Go To 2	All
2	With the DRBIII®, perform the SRI Memory Test. Does the DRBIII® display Write Refused? Yes → Go To 3 No → Go To 4	All

P1696-EEPROM MEMORY WRITE DENIED/INVALID — Continued

TEST	ACTION	APPLICABILITY
3	With the DRBIII®, perform the SRI Memory Test a second time. **NOTE: Retest the SRI Memory two more times.** Does the DRBIII® display Write Refused again? Yes → Replace and program the Powertrain Control Module in accordance with the Service Information. Perform POWERTRAIN VERIFICATION TEST VER - 1 - NGC. No → Test Complete.	All
4	With the DRBIII®, perform the SRI Memory Test. Does the DRBIII® display SRI Mileage Invalid? Yes → Update the mileage and retest the SRI Memory. Perform POWERTRAIN VERIFICATION TEST VER - 1 - NGC. No → Go To 5	All
5	Compare the SRI Mileage stored with the Instrument Panel Odometer. Is the mileage within the specified range displayed on the DRBIII®? Yes → Test Complete. No → Update the mileage and retest the SRI Memory. Perform POWERTRAIN VERIFICATION TEST VER - 1 - NGC.	All

Symptom:

P2074-MANIFOLD PRESSURE/THROTTLE POSITION CORRELATION - HIGH FLOW/VACUUM LEAK

When Monitored and Set Condition:

P2074-MANIFOLD PRESSURE/THROTTLE POSITION CORRELATION - HIGH FLOW/VACUUM LEAK

When Monitored: Engine Running, during all drive modes.

Set Condition: If vacuum drops below 1.5 Hg with engine RPM greater than 2000 RPM at closed throttle.

POSSIBLE CAUSES
GOOD TRIP EQUAL TO ZERO
VACUUM LEAK
HIGH RESISTANCE IN MAP (K6) 5 VOLT SUPPLY CIRCUIT
RESISTANCE TO GROUND IN MAP (K6) 5 VOLT SUPPLY CIRCUIT
MAP SENSOR
HIGH RESISTANCE IN (K1) MAP SIGNAL CIRCUIT
RESISTANCE TO GROUND IN (K1) MAP SIGNAL CIRCUIT
HIGH RESISTANCE IN (K4) MAP GROUND CIRCUIT
PCM
TP SENSOR OPERATION
HIGH RESISTANCE IN TP SENSOR (K6) 5 VOLT SUPPLY CIRCUIT
RESISTANCE TO GROUND IN TP SENSOR (K6) 5 VOLT SUPPLY CIRCUIT
TP SENSOR
HIGH RESISTANCE IN (K22) TP SIGNAL CIRCUIT
RESISTANCE TO GROUND IN (K22) TP SENSOR SIGNAL CIRCUIT
HIGH RESISTANCE IN TP (K4) SENSOR GROUND CIRCUIT
PCM

P2074-MANIFOLD PRESSURE/THROTTLE POSITION CORRELATION - HIGH FLOW/VACUUM LEAK — Continued

TEST	ACTION	APPLICABILITY
1	**NOTE: Diagnose any TP Sensor or MAP Sensor component DTCs before continuing.** **NOTE: If the P0501 - No Vehicle Speed Signal is set along with this DTC, refer to the P0501 diagnostics before continuing.** **NOTE: The throttle plate and linkage must be free from binding and carbon build up, ensure the throttle plate is at the idle position, ensure the throttle plate is at the idle position.** Ignition on, engine not running. With the DRBIII®, read DTCs and record the related Freeze Frame data. Is the Good Trip Counter displayed and equal to zero? Yes → Go To 2 No → Refer to the INTERMITTENT CONDITION symptom in the Driveability category. Perform POWERTRAIN VERIFICATION TEST VER - 5 - NGC.	All
2	**NOTE: This code is enabled on engines with a plastic intake manifold and is intended to shut down the engine if a large crack occurs in the intake manifold.** **NOTE: A large vacuum leak is most likely the cause of this DTC.** Inspect the Intake Manifold for leaks and cracks. Inspect the Power Brake Booster for any vacuum leaks. Inspect the PCV system for proper operation or any vacuum leaks. Were any vacuum leaks found? Yes → Repair the vacuum leak as necessary. Perform POWERTRAIN VERIFICATION TEST VER - 5 - NGC. No → Go To 3	All
3	Start the engine. With the DRBIII®, monitor the MAP Sensor voltage. Snap the throttle. Does the MAP Sensor voltage vary from below 2.0 volts at idle to above 3.5 volts? Yes → Go To 4 No → Go To 12	All
4	Ignition on, engine not running. With the DRBIII®, monitor the TP Sensor voltage while slowly depressing the throttle pedal from the idle position to the wide open throttle position. Does the voltage start approximately at 0.8 volts and go above 3.5 volts with a smooth transition? Yes → Refer to the INTERMITTENT CONDITION symptom in the Driveability category. Perform POWERTRAIN VERIFICATION TEST VER - 5 - NGC. No → Go To 5	All

P2074-MANIFOLD PRESSURE/THROTTLE POSITION CORRELATION - HIGH FLOW/VACUUM LEAK — Continued

TEST	ACTION	APPLICABILITY
5	Turn the ignition off. Disconnect the TP Sensor harness connector. Disconnect the PCM harness connector. **CAUTION: DO NOT PROBE THE PCM HARNESS CONNECTORS. PROBING THE PCM HARNESS CONNECTORS WILL DAMAGE THE PCM TERMINALS RESULTING IN POOR TERMINAL TO PIN CONNECTION. INSTALL MILLER SPECIAL TOOL #8815 TO PERFORM DIAGNOSIS.** Measure the resistance of the (K6) 5 Volt Supply circuit from the TP Sensor harness connector to the appropriate terminal of special tool #8815. Is the resistance below 5.0 ohms? Yes → Go To 6 No → Repair the TP Sensor (K6) 5 Volt Supply circuit. Perform POWERTRAIN VERIFICATION TEST VER - 5 - NGC.	All
6	Turn the ignition off. Disconnect the TP Sensor harness connector. Disconnect the PCM harness connector. Measure the resistance between ground and the (K6) 5 Volt Supply circuit at the TP Sensor harness connector. Is the resistance above 100k ohms? Yes → Go To 7 No → Repair the (K6) 5 Volt Supply circuit. Perform POWERTRAIN VERIFICATION TEST VER - 5 - NGC.	All
7	Turn the ignition off. Disconnect the TP Sensor harness connector. With the DRBIII®, monitor the TP Sensor voltage. Ignition on, engine not running. Connect a jumper wire between the (K22) TP Signal circuit and the (K4) Sensor ground circuit . Does the TP Sensor voltage change from approximately 4.9 volts to below 0.5 of a volt? Yes → Replace the Throttle Position Sensor. Perform POWERTRAIN VERIFICATION TEST VER - 5 - NGC. No → Go To 8	All
8	Turn the ignition off. Disconnect the TP Sensor harness connector. Disconnect the PCM harness connector. **CAUTION: DO NOT PROBE THE PCM HARNESS CONNECTORS. PROBING THE PCM HARNESS CONNECTORS WILL DAMAGE THE PCM TERMINALS RESULTING IN POOR TERMINAL TO PIN CONNECTION. INSTALL MILLER SPECIAL TOOL #8815 TO PERFORM DIAGNOSIS.** Measure the resistance of the (K22) TP Signal circuit from the TP Sensor harness connector to the appropriate terminal of special tool #8815. Is the resistance below 5.0 ohms? Yes → Go To 9 No → Repair the (K22) TP Signal circuit. Perform POWERTRAIN VERIFICATION TEST VER - 5 - NGC.	All

P2074-MANIFOLD PRESSURE/THROTTLE POSITION CORRELATION - HIGH FLOW/VACUUM LEAK — Continued

TEST	ACTION	APPLICABILITY
9	Turn the ignition off. Disconnect the TP Sensor harness connector. Disconnect the PCM harness connector. Measure the resistance between ground and the (K22) TP Signal circuit in the TP Sensor harness connector. Is the resistance above 100k ohms? Yes → Go To 10 No → Repair the (K22) TP Sensor Signal circuit. Perform POWERTRAIN VERIFICATION TEST VER - 5 - NGC.	All
10	Turn the ignition off. Disconnect the TP Sensor harness connector. Disconnect the PCM harness connector. **CAUTION: DO NOT PROBE THE PCM HARNESS CONNECTORS. PROBING THE PCM HARNESS CONNECTORS WILL DAMAGE THE PCM TERMINALS RESULTING IN POOR TERMINAL TO PIN CONNECTION. INSTALL MILLER SPECIAL TOOL #8815 TO PERFORM DIAGNOSIS.** Measure the resistance of the (K4) Sensor ground circuit from the TP Sensor harness connector to the appropriate terminal of special tool #8815. Is the resistance below 5.0 ohms? Yes → Go To 11 No → Repair the (K4) Sensor Ground circuit. Perform POWERTRAIN VERIFICATION TEST VER - 5 - NGC.	All
11	**NOTE: Before continuing, check the PCM harness connector terminals for corrosion, damage, or terminal push out. Repair as necessary.** If there are no possible causes remaining, view repair. Repair Replace and program the Powertrain Control Module in accordance with the Service Information. Perform POWERTRAIN VERIFICATION TEST VER - 5 - NGC.	All
12	Turn the ignition off. Disconnect the MAP Sensor harness connector. Disconnect the PCM harness connector. **CAUTION: DO NOT PROBE THE PCM HARNESS CONNECTORS. PROBING THE PCM HARNESS CONNECTORS WILL DAMAGE THE PCM TERMINALS RESULTING IN POOR TERMINAL TO PIN CONNECTION. INSTALL MILLER SPECIAL TOOL #8815 TO PERFORM DIAGNOSIS.** Measure the resistance of the (K6) 5 Volt Supply circuit from the MAP Sensor harness connector to the appropriate terminal of special tool #8815. Is the resistance below 5.0 ohms? Yes → Go To 13 No → Repair the MAP (K6) 5 Volt Supply circuit. Perform POWERTRAIN VERIFICATION TEST VER - 5 - NGC.	All

P2074-MANIFOLD PRESSURE/THROTTLE POSITION CORRELATION - HIGH FLOW/VACUUM LEAK — Continued

TEST	ACTION	APPLICABILITY
13	Turn the ignition off. Disconnect the MAP Sensor harness connector. Disconnect the PCM harness connector. Measure the resistance between ground and the (K6) 5 Volt Supply circuit at the MAP Sensor harness connector. Is the resistance above 100k ohms? Yes → Go To 14 No → Repair the short to ground in the (K6) 5 Volt Supply circuit. Perform POWERTRAIN VERIFICATION TEST VER - 5 - NGC.	All
14	Turn the ignition off. Disconnect the MAP Sensor harness connector. With the DRBIII®, monitor the MAP Sensor voltage. Ignition on, engine not running. Connect a jumper wire between the (K1) MAP Sensor Signal circuit and the (K4) Sensor ground circuit . Cycle the ignition switch from off to on. With the DRBIII®, monitor the MAP Sensor voltage. Does the DRBIII® display MAP voltage from approximately 4.9 volts to below 0.5 volt? Yes → Replace the MAP Sensor. Perform POWERTRAIN VERIFICATION TEST VER - 5 - NGC. No → Go To 15	All
15	Turn the ignition off. Disconnect the MAP Sensor harness connector. Disconnect the PCM harness connector. **CAUTION: DO NOT PROBE THE PCM HARNESS CONNECTORS. PROBING THE PCM HARNESS CONNECTORS WILL DAMAGE THE PCM TERMINALS RESULTING IN POOR TERMINAL TO PIN CONNECTION. INSTALL MILLER SPECIAL TOOL #8815 TO PERFORM DIAGNOSIS.** Measure the resistance of the (K1) MAP Signal circuit from the MAP Sensor harness connector to the appropriate terminal of special tool #8815. Is the resistance below 5.0 ohms? Yes → Go To 16 No → Repair the (K1) MAP Signal circuit. Perform POWERTRAIN VERIFICATION TEST VER - 5 - NGC.	All
16	Turn the ignition off. Disconnect the MAP Sensor harness connector. Disconnect the PCM harness connector. Measure the resistance between ground and the (K1) MAP Signal circuit at the MAP Sensor harness connector. Is the resistance above 100k ohms? Yes → Go To 17 No → Repair the (K1) MAP Signal circuit. Perform POWERTRAIN VERIFICATION TEST VER - 5 - NGC.	All

P2074-MANIFOLD PRESSURE/THROTTLE POSITION CORRELATION - HIGH FLOW/VACUUM LEAK — Continued

TEST	ACTION	APPLICABILITY
17	Turn the ignition off. Disconnect the MAP Sensor harness connector. Disconnect the PCM harness connector. **CAUTION: DO NOT PROBE THE PCM HARNESS CONNECTORS. PROBING THE PCM HARNESS CONNECTORS WILL DAMAGE THE PCM TERMINALS RESULTING IN POOR TERMINAL TO PIN CONNECTION. INSTALL MILLER SPECIAL TOOL #8815 TO PERFORM DIAGNOSIS.** Measure the resistance of the (K4) Sensor ground circuit from the MAP Sensor harness connector to the appropriate terminal of special tool #8815. Is the resistance below 5.0 ohms? Yes → Go To 18 No → Repair the (K4) Sensor Ground circuit. Perform POWERTRAIN VERIFICATION TEST VER - 5 - NGC.	All
18	**NOTE: Before continuing, check the PCM harness connector terminals for corrosion, damage, or terminal push out. Repair as necessary.** If there are no possible causes remaining, view repair. Repair Replace and program the Powertrain Control Module in accordance with the Service Information. Perform POWERTRAIN VERIFICATION TEST VER - 5 - NGC.	All

Symptom List:

P2096-DOWN STREAM FUEL SYSTEM 1/2 LEAN
P2097-DOWN STREAM FUEL SYSTEM 1/2 RICH

Test Note: All symptoms listed above are diagnosed using the same tests. The title for the tests will be P2096-DOWN STREAM FUEL SYSTEM 1/2 LEAN.

When Monitored and Set Condition:

P2096-DOWN STREAM FUEL SYSTEM 1/2 LEAN

When Monitored: With the engine running in closed loop mode, the ambient/battery temperature above (-7°C)20°F, altitude below 8500 ft and fuel level greater than 15%.

Set Condition: If the PCM adds downstream short term compensation to long term adaptive and a certain percentage is exceeded for two trips, a freeze frame is stored, the MIL illuminates and a trouble code is stored.

P2097-DOWN STREAM FUEL SYSTEM 1/2 RICH

When Monitored: With the engine running in closed loop mode, the ambient/battery temperature above (-7°C)20°F and altitude below 8500 ft.

Set Condition: If the PCM adds downstream short term compensation to long term adaptive and a certain percentage is exceeded for two trips, a freeze frame is stored, the MIL illuminates and a trouble code is stored.

POSSIBLE CAUSES
GOOD TRIP EQUAL TO ZERO
EXHAUST LEAK
ENGINE MECHANICAL PROBLEM
O2 SENSOR
O2 SIGNAL CIRCUIT
O2 RETURN CIRCUIT
FUEL CONTAMINATION

P2096-DOWN STREAM FUEL SYSTEM 1/2 LEAN — Continued

TEST	ACTION	APPLICABILITY
1	**NOTE: Check the vehicle repair history. If the O2 has been replace ensure that the O2 sensor was properly installed and meets OEM specification.** **NOTE: Check for contaminants that may have damaged the O2 Sensor: contaminated fuel, unapproved silicone, oil and coolant.** Ignition on, engine not running. With the DRBIII®, read DTCs and record the related Freeze Frame data. Is the Good Trip Counter displayed and equal to zero? Yes → Go To 2 No → Refer to the INTERMITTENT CONDITION symptom in the Driveability category. Perform POWERTRAIN VERIFICATION TEST VER - 5 - NGC.	All
2	Turn the ignition off. **WARNING: To avoid personal injury from the exhaust system being hot, allow the exhaust to cool down to a safe temperature before performing a physical inspection.** Visually and Physically inspect the for holes, cracks and blockage in the exhaust system. Is the exhaust system is good condition? Yes → Go To 3 No → Repair or Replace as necessary. Perform POWERTRAIN VERIFICATION TEST VER - 5 - NGC.	All
3	Check for any of the following conditions/mechanical problems. AIR INDUCTION SYSTEM - must be free from leaks. ENGINE VACUUM - must be at least 13 inches in neutral ENGINE VALVE TIMING - must be within specifications ENGINE COMPRESSION - must be within specifications ENGINE EXHAUST SYSTEM - must be free of any restrictions or leaks. ENGINE PCV SYSTEM - must flow freely TORQUE CONVERTER STALL SPEED - must be within specifications POWER BRAKE BOOSTER - no internal vacuum leaks FUEL - must be free of contamination FUEL INJECTOR - plugged or restricted injector; control wire not connected to correct injector Are there any engine mechanical problems? Yes → Repair as necessary. Perform POWERTRAIN VERIFICATION TEST VER - 5 - NGC. No → Go To 4	All
4	Ignition on, engine not running. Disconnect the O2 Sensor harness connector. With the DRBIII®, monitor the O2 Sensor voltage. The O2 Sensor voltage should read 5.0 volts on the DRBIII® with the connector disconnected. Using a jumper wire, jump the O2 Signal circuit to the O2 Return circuit at the O2 Sensor harness connector. **NOTE: The voltage should drop from 5.0 volts to 2.5 volts with the jumper wire in place.** Did the O2 Sensor volts change from 5.0 volts to 2.5 volts? Yes → Replace the O2 Sensor Perform POWERTRAIN VERIFICATION TEST VER - 5 - NGC. No → Go To 5	All

P2096-DOWN STREAM FUEL SYSTEM 1/2 LEAN — Continued

TEST	ACTION	APPLICABILITY
5	Turn the ignition off. Disconnect the O2 Sensor harness connector. Ignition on, engine not running. With the DRBIII®, monitor the O2 Sensor voltage. Is the voltage above 4.8 volts? Yes → Go To 6 No → Check the O2 Signal circuit for a short to ground, open, or short to voltage. Inspect the O2 Sensor connector and the PCM harness connector. If OK, replace and program the Powertrain Control Module in accordance with the Service Information. Perform POWERTRAIN VERIFICATION TEST VER - 5 - NGC.	All
6	Turn the ignition off. Disconnect the O2 Sensor harness connector. Ignition on, engine not running. Measure the voltage on the O2 Return circuit in the O2 Sensor harness connector. Is the voltage at 2.5 volts? Yes → Check the fuel system for contaminants. Perform POWERTRAIN VERIFICATION TEST VER - 5 - NGC. No → Check the O2 Return circuit for a short to ground, open, or short to voltage. Inspect the O2 Sensor connector and the PCM harness connector. If OK, replace and program the Powertrain Control Module in accordance with the Service Information. Perform POWERTRAIN VERIFICATION TEST VER - 5 - NGC.	All

Symptom List:

P2302-IGNITION COIL #1 SECONDARY CIRCUIT-INSUFFICIENT IONIZATION
P2305-IGNITION COIL #2 SECONDARY CIRCUIT-INSUFFICIENT IONIZATION
P2308-IGNITION COIL #3 SECONDARY CIRCUIT-INSUFFICIENT IONIZATION

Test Note: All symptoms listed above are diagnosed using the same tests. The title for the tests will be P2302-IGNITION COIL #1 SECONDARY CIRCUIT-INSUFFICIENT IONIZATION.

When Monitored and Set Condition:

P2302-IGNITION COIL #1 SECONDARY CIRCUIT-INSUFFICIENT IONIZATION

When Monitored: Engine Running.

Set Condition: If PCM detects that the secondary ignition burn time is incorrect or not present an error is detected. One Trip Fault.

P2305-IGNITION COIL #2 SECONDARY CIRCUIT-INSUFFICIENT IONIZATION

When Monitored: Engine Running.

Set Condition: If PCM detects that the secondary ignition burn time is incorrect or not present an error is detected. One Trip Fault

P2308-IGNITION COIL #3 SECONDARY CIRCUIT-INSUFFICIENT IONIZATION

When Monitored: Engine Running.

Set Condition: If PCM detects that the secondary ignition burn time is incorrect or not present an error is detected. One Trip Fault

POSSIBLE CAUSES
INTERMITTENT CONDITION
SPARK PLUG
IGNITION WIRE
IGNITION COIL OPERATION
IGNITION COIL CONTROL CIRCUIT OPEN
COIL CONTROL CIRCUIT SHORTED TO GROUND
PCM
(A142) ASD RELAY OUTPUT CIRCUIT
IGNITION COIL

P2302-IGNITION COIL #1 SECONDARY CIRCUIT-INSUFFICIENT IONIZATION — Continued

TEST	ACTION	APPLICABILITY
1	Ignition on, engine not running. With the DRBIII®, read DTCs and record the related Freeze Frame data. Is the Good Trip Counter displayed and equal to zero? Yes → Go To 2 No → Go To 9	All
2	**NOTE: This test must be repeated for the adjacent ignition wire.** Turn the ignition off. Disconnect the ignition wire from the spark plug. **NOTE: Before continuing inspect the ignition wire for damage or carbon tracking coil or the spark plug insulator boot. If a problem is found, replace the ignition wire.** Install a spark tester to the ignition wire. While cranking the engine observe the spark coming from the spark tester. **NOTE: A crisp blue spark that is able to jumper the gap of the spark tester should be generated.** Is a good spark generated? Yes → Ensure the cylinder is operationg properly. If OK, replace the Spark Plug. Perform POWERTRAIN VERIFICATION TEST VER - 2 - NGC. No → Go To 3	All
3	**NOTE: This test must be repeated for the adjacent ignition wire.** Turn the ignition off. Remove the ignition wire. Measure the resistance of the ignition wire. Is the resistance below 10K ohms? Yes → Go To 4 No → Replace the Ignition Wire. Perform POWERTRAIN VERIFICATION TEST VER - 2 - NGC.	All
4	Turn the ignition off. Disconnect the Ignition Coil harness connector. Turn the ignition on. With the DRBIII®, actuate the ASD Relay. Using a 12-volt test light connected to ground, probe the (A142) ASD Relay Output circuit in the Ignition Coil harness connector. Does the test light illuminate brightly? Yes → Go To 5 No → Repair the (A142) ASD Relay Output circuit. Perform POWERTRAIN VERIFICATION TEST VER - 2 - NGC.	All
5	Turn the ignition off. Disconnect the Ignition Coil harness connector. Using a 12-volt test light connected to 12-volts, probe the Ignition Coil Control circuit. Crank the engine for 5 second while observing the test light. Does the test light blink/flicker? Yes → Replace the Ignition Coil. Perform POWERTRAIN VERIFICATION TEST VER - 2 - NGC. No → Go To 6	All

P2302-IGNITION COIL #1 SECONDARY CIRCUIT-INSUFFICIENT ION-IZATION — Continued

TEST	ACTION	APPLICABILITY
6	Turn the ignition off. Disconnect the Ignition Coil harness connector. Disconnect the PCM harness connector. Measure the resistance of the Coil Control circuit between the Ignition Coil harness connector and the special tool #8815 terminal. Is the resistance below 5.0 ohms? Yes → Go To 7 No → Repair the Coil Control circuit for an open. Perform POWERTRAIN VERIFICATION TEST VER - 2 - NGC.	All
7	Turn the ignition off. Disconnect the Ignition Coil harness connector. Disconnect the PCM harness connector. Measure the resistance between ground and the Coil Control circuit in the Ignition Coil harness connector. Is the resistance below 100k ohms? Yes → Repair the Coil Control circuit for a short to ground. Perform POWERTRAIN VERIFICATION TEST VER - 2 - NGC. No → Go To 8	All
8	NOTE: Before continuing, check the PCM harness connector terminals for corrosion, damage, or terminal push out. Repair as necessary. If there are no possible causes remaining, view repair. Repair Replace and program the Powertrain Control Module in accordance with the Service Information. Perform POWERTRAIN VERIFICATION TEST VER - 2 - NGC.	All
9	Turn the ignition off. Remove the Spark Plug. Inspect the Spark Plug for the following conditions. - Cracks - Carbon Tracking - Foreign Material - Gap size out of specifications - Loose or broke electrode **NOTE: Lightly tap the bottom of the spark plug on a solid surface. The electrode in the spark plug should not move.** Were any of the above condition present? Yes → Replace the Spark Plug. Perform POWERTRAIN VERIFICATION TEST VER - 2 - NGC. No → Refer to the INTERMITTENT CONDITION symptom in the Driveability category. Perform POWERTRAIN VERIFICATION TEST VER - 2 - NGC.	All

Symptom:

P2503-CHARGING SYSTEM VOLTAGE LOW

When Monitored and Set Condition:

P2503-CHARGING SYSTEM VOLTAGE LOW

When Monitored: The engine running. The engine speed greater than 1157 RPM.

Set Condition: The battery sensed voltage is 1 volt below the charging goal for 13.47 seconds. The PCM senses the battery voltage turns off the field driver and senses the battery voltage again. If the voltages are the same, the code is set.

POSSIBLE CAUSES
CHARGING VOLTAGE BELOW 15.1 VOLTS
(A11) B+ CIRCUIT HIGH RESISTANCE
GENERATOR GROUND HIGH RESISTANCE
GENERATOR OPERATION
(Z1) GEN FIELD GROUND CIRCUIT OPEN
(K20) GEN FIELD CONTROL CIRCUIT SHORTED TO BATTERY VOLTAGE
(K20) GEN FIELD CONTROL CIRCUIT SHORTED TO GROUND
(K20) GEN FIELD CONTROL CIRCUIT OPEN
PCM

TEST	ACTION	APPLICABILITY
1	**NOTE: Inspect the vehicle for aftermarket accessories that may exceed the Generator System output.** Turn the ignition off. **NOTE: The battery must be fully charged.** **NOTE: The Generator belt tension and condition must be checked before continuing.** Start the engine. Allow the idle to stabilize. With the DRBIII®, read the Target Charging Voltage. Is the Target Charging Voltage above 15.1 volts? Yes → Refer to the INTERMITTENT CONDITION symptom in the Driveability category. Perform POWERTRAIN VERIFICATION TEST VER - 3 - NGC. No → Go To 2	All

P2503-CHARGING SYSTEM VOLTAGE LOW — Continued

TEST	ACTION	APPLICABILITY
2	**WARNING: WHEN THE ENGINE IS OPERATING, DO NOT STAND IN A DIRECT LINE WITH THE FAN. DO NOT PUT YOUR HANDS NEAR THE PULLEYS, BELTS OR FAN. DO NOT WEAR LOOSE CLOTHING.** Ignition on, engine not running. **NOTE: Ensure all wires are clear of the engine's moving parts.** Start the engine. Measure the voltage between the (A11) Generator B+ Terminal and the Battery+ Post. Is the voltage above 0.4 of a volt? Yes → Repair the (A11) B+ circuit for high resistance between the Generator and Battery. Perform POWERTRAIN VERIFICATION TEST VER - 3 - NGC. No → Go To 3	All
3	**WARNING: WHEN THE ENGINE IS OPERATING, DO NOT STAND IN A DIRECT LINE WITH THE FAN. DO NOT PUT YOUR HANDS NEAR THE PULLEYS, BELTS OR FAN. DO NOT WEAR LOOSE CLOTHING.** Start the engine. Warm the engine to operating temperature. **NOTE: Ensure all wires are clear of the engine's moving parts.** Measure the voltage between the Generator case and Battery ground post. Is the voltage above 0.1 of a volt? Yes → Repair Generator Ground for high resistance, Generator Case to Battery ground side. Perform POWERTRAIN VERIFICATION TEST VER - 3 - NGC. No → Go To 4	All
4	Turn the ignition off. Disconnect the Generator Field harness connector. Using a 12-volt test light, jumper it across the Generator Field harness connector. Ignition on, engine not running. With the DRBIII®, actuate the Gen Field Control circuit. Does the test light illuminate brightly and flash on and off? Yes → Replace the Generator. Perform POWERTRAIN VERIFICATION TEST VER - 3 - NGC. No → Go To 5	All
5	Turn the ignition off. Disconnect the Generator Field harness connector. Using a 12-volt test connected to battery voltage, probe the (Z1) Gen Field Ground circuit in the Generator Field harness connector. Does the test light illuminate brightly? Yes → Go To 6 No → Repair the open in the (Z1) Gen Field Ground circuit. Perform POWERTRAIN VERIFICATION TEST VER - 3 - NGC.	All

P2503-CHARGING SYSTEM VOLTAGE LOW — Continued

TEST	ACTION	APPLICABILITY
6	Turn the ignition off. Disconnect the Generator Field harness connector. Disconnect the PCM harness connector. Measure the voltage on the (K20) Gen Field Control circuit at the Generator Field harness connector. Is the voltage above 1.0 volt? Yes → Repair the short to voltage in the (K20) Gen Field Control circuit. Perform POWERTRAIN VERIFICATION TEST VER - 3 - NGC. No → Go To 7	All
7	Turn the ignition on. Disconnect the Generator Field harness connector. Disconnect the PCM harness connector. Measure the resistance between ground and the (K20) Gen Field Control circuit in the Generator Field harness connector. Is the resistance below 100 ohms? Yes → Repair the (K20) Gen Field Control circuit for a short to ground. Perform POWERTRAIN VERIFICATION TEST VER - 3 - NGC. No → Go To 8	All
8	Turn the ignition off. Disconnect the Generator Field harness connector. Disconnect the PCM harness connector. **CAUTION: DO NOT PROBE THE PCM HARNESS CONNECTORS. PROBING THE PCM HARNESS CONNECTORS WILL DAMAGE THE PCM TERMINALS RESULTING IN POOR TERMINAL TO PIN CONNECTION. INSTALL MILLER SPECIAL TOOL #8815 TO PERFORM DIAGNOSIS.** Measure the resistance of the (K20) Gen Field Control circuit from the Generator Field harness connector to the appropriate terminal of the special tool #8815. Is the resistance below 5.0 ohms? Yes → Go To 9 No → Repair the open in the (K20) Generator Field Control circuit. Perform POWERTRAIN VERIFICATION TEST VER - 3 - NGC.	All
9	If there are no possible causes remaining, view repair. Repair Replace and program the Powertrain Control Module in accordance with the Service Information. Perform POWERTRAIN VERIFICATION TEST VER - 3 - NGC.	All

Symptom:

U0101-NO TRANSMISSION BUS MESSAGE

When Monitored and Set Condition:

U0101-NO TRANSMISSION BUS MESSAGE

When Monitored: Equipped with automatic transmission. Engine Running Battery voltage greater than 10 volts.

Set Condition: No bus messages are received from the TCM for 20 seconds, two trips required.

POSSIBLE CAUSES
PCI BUS UNABLE TO COMMUNICATE WITH DRBIII®
(F12) FUSED IGNITION SWITCH OUTPUT (OFF-RUN-START)
INTERMITTENT CONDITION
PCM

TEST	ACTION	APPLICABILITY
1	**NOTE: If P1603 or P1604 are set along with this DTC, diagnose them first before continuing with P1698.** **NOTE: Before continuing, inspect all fuses and ensure that all power and ground circuits are operating properly.** **NOTE: Check all powers and grounds to the PCM before continuing.** Turn the ignition on. With the DRBIII®, erase DTCs. Start the engine, allow the engine to run for at least 20 seconds with the gear selector in Drive. Repeat at least 2 times. With the DRBIII®, read DTC's. Does the DTC reset? Yes → Go To 2 No → Refer to the INTERMITTENT CONDITION symptom in the Driveability category. Perform POWERTRAIN VERIFICATION TEST VER - 1 - NGC.	All

U0101-NO TRANSMISSION BUS MESSAGE — Continued

TEST	ACTION	APPLICABILITY
2	Turn the ignition off. Disconnect the PCM harness connector. **CAUTION: DO NOT PROBE THE PCM HARNESS CONNECTORS. PROBING THE PCM HARNESS CONNECTORS WILL DAMAGE THE PCM TERMINALS RESULTING IN POOR TERMINAL TO PIN CONNECTION. INSTALL MILLER SPECIAL TOOL #8815 TO PERFORM DIAGNOSIS.** Turn the ignition to run. Using a 12-volt test light connected to ground, probe the (F12) Fused Ignition Switch Output (Off-Run-Start) cavity C1-12 circuit at the appropriate terminal of the special tool #8815. **NOTE: If the test light illuminates, wiggle the wiring harness to ensure that the problem is not an intermittent wiring problem.** Does the test light illuminate brightly? Yes → Go To 3 No → Check all related fuses. Repair the (F12) Fused Ignition Switch Output circuit for an open. Perform POWERTRAIN VERIFICATION TEST VER - 1 - NGC.	All
3	**Note: Determine which modules this vehicle is equipped with before beginning.** **Note: When attempting to communicate with any of the modules on this vehicle, the DRB will display 1 of 2 different communication errors: a NO RESPONSE message or a BUS +/- SIGNALS OPEN message.** Turn the ignition on. Using the DRB, attempt to communicate with the following control modules: Body Control Module (BCM) Instrument Cluster (MIC) Controller Antilock Brake (CAB) Was the DRB able to communicate with one or more Module(s)? Yes → Replace and program the Powertrain Control Module in accordance with the Service Information. Perform POWERTRAIN VERIFICATION TEST VER - 1 - NGC. No → Refer to the Communication category and perform the PCI BUS COMMUNICATION FAILURE symptom. Perform POWERTRAIN VERIFICATION TEST VER - 1 - NGC.	All

Symptom:

U0140-NO BODY BUS MESSAGES

When Monitored and Set Condition:

U0140-NO BODY BUS MESSAGES

When Monitored: Engine running. Battery voltage greater than 10.0 volts.

Set Condition: No BUS messages recieved from the BCM for 20 seconds.

POSSIBLE CAUSES
DTC RESET
COMMUNICATE WITH BCM
PCI BUS CIRCUIT OPEN
PCM

TEST	ACTION	APPLICABILITY
1	Turn the ignition on. With the DRBIII®, erase DTCs. Start the engine on and off several times. Leave the engine running for at least 20 second each time. With the DRBIII®, read DTC's. Does the DTC reset? Yes → Go To 2 No → Refer to the INTERMITTENT CONDITION symptom in the Driveability category. Perform POWERTRAIN VERIFICATION TEST VER - 1 - NGC.	All
2	Turn the ignition on. With the DRBIII®, attempt to communicate with the BCM. Can communication be established with the BCM? Yes → Go To 3 No → Refer to the Communication Category and perform the appropriate symptom related to no communication with BCM. Perform POWERTRAIN VERIFICATION TEST VER - 1 - NGC.	All

U0140-NO BODY BUS MESSAGES — Continued

TEST	ACTION	APPLICABILITY
3	Turn the ignition off. Disconnect the PCM harness connector Disconnect the BCM harness connector. **NOTE: Inspect the PCI Bus terminal at both the PCM connectors and the BCM connectors. Check for corrosion, damage or terminal push out.** **CAUTION: DO NOT PROBE THE PCM HARNESS CONNECTORS. PROBING THE PCM HARNESS CONNECTORS WILL DAMAGE THE PCM TERMINALS RESULTING IN POOR TERMINAL TO PIN CONNECTION. INSTALL MILLER SPECIAL TOOL #8815 TO PERFORM DIAGNOSIS.** Measure the resistance of the PCI BUS circuit between the Special Tool #8815 and the BCM harness connector. Is the resistance below 5.0 ohms? Yes → Replace and program the Powertrain Control Module in accordance with the Service Information. Perform POWERTRAIN VERIFICATION TEST VER - 1 - NGC. No → Repair the PCI BUS circuit for an open. Perform POWERTRAIN VERIFICATION TEST VER - 1 - NGC.	All

Symptom:

U0155-NO CLUSTER BUS MESSAGE

When Monitored and Set Condition:

U0155-NO CLUSTER BUS MESSAGE

When Monitored: Engine Running.

Set Condition: No BUS messages received from the MIC (Instrument Cluster) for 20 seconds.

POSSIBLE CAUSES
DTC RESET
COMMUNICATE WITH CLUSTER
INSTRUMENT CLUSTER OPERATION
PCM

TEST	ACTION	APPLICABILITY
1	Turn the ignition on. With the DRBIII®, erase DTCs. Start the engine on and off several times. Leave the engine running for at least 20 second each time. With the DRBIII®, read DTCs. Does the DTC reset? Yes → Go To 2 No → Refer to the INTERMITTENT CONDITION symptom in the Driveability category. Perform POWERTRAIN VERIFICATION TEST VER - 1 - NGC.	All
2	Ignition on, engine not running. With the DRBIII®, attempt to communicate with the Instrument cluster. Can communication be established with the Instrument Cluster? Yes → Go To 3 No → Refer to the Communication Category and perform the appropriate symptom related to no communication with cluster. Perform POWERTRAIN VERIFICATION TEST VER - 1 - NGC.	All
3	Start the engine Allow the engine to idle. Is the correct engine speed display (Tachometer) in the instrument cluster? Yes → Replace and program the Powertrain Control Module in accordance with the Service Information. Perform POWERTRAIN VERIFICATION TEST VER - 1 - NGC. No → Refer to the Instrument Category and perform the appropriate symptom. Perform POWERTRAIN VERIFICATION TEST VER - 1 - NGC.	All

Symptom:
U0168-NO SKIM BUS MESSAGES

When Monitored and Set Condition:

U0168-NO SKIM BUS MESSAGES

When Monitored: Ignition on or Engine Running.

Set Condition: No BUS messages are received from the SKIM for 20 seconds.

POSSIBLE CAUSES
INTERMITTENT CONDITION
PCI BUS CIRCUIT OPEN FROM PCM TO SKIM
LOSS OF SKIM COMMUNICATION
SKIM/PCM

TEST	ACTION	APPLICABILITY
1	Turn the ignition on. With the DRBIII®, read the DTCs and record the related Freeze Frame data. Is the Good Trip Counter displayed and equal to zero? Yes → Go To 2 No → Go To 5	All
2	Turn the ignition on. With the DRB III, attempt to communicate with the SKIM. **NOTE: This test will indicate if the Bus is operational from the DLC to the SKIM.** Was the DRB III able to communicate with the SKIM? Yes → Go To 3 No → Refer to symptom BUS +/- SIGNAL OPEN FROM SKIM in the COMMUNICATION category. Perform SKIS VERIFICATION.	All
3	Turn the ignition off. Disconnect the PCM harness connectors. Disconnect the SKIM harness connector. **CAUTION: DO NOT PROBE THE PCM HARNESS CONNECTORS. PROBING THE PCM HARNESS CONNECTORS WILL DAMAGE THE PCM TERMINALS RESULTING IN POOR TERMINAL TO PIN CONNECTION. INSTALL MILLER SPECIAL TOOL #8815 TO PERFORM DIAGNOSIS.** Measure the resistance of the PCI Bus circuit from the SKIM harness connector to the appropriate terminal of special tool #8815. Is the resistance below 5.0 ohms? Yes → Go To 4 No → Repair the PCI Bus circuit between the PCM and the SKIM for an open. Perform SKIS VERIFICATION.	All

U0168-NO SKIM BUS MESSAGES — Continued

TEST	ACTION	APPLICABILITY
4	Turn the ignition off. Replace the Sentry Key Immobilizer Module in accordance with the Service Information. Turn the ignition on. Display and erase all PCM and SKIM DTCs. Perform 5 ignition key cycles leaving the ignition key on for 90 seconds per cycle. With the DRB, display PCM DTCs. Does the DRB display the same DTC? Yes → Replace and program the PCM in accordance with the Service Information. Perform SKIS VERIFICATION. No → Test Complete.	All
5	**WARNING: WHEN THE ENGINE IS OPERATING, DO NOT STAND IN A DIRECT LINE WITH THE FAN. DO NOT PUT YOUR HANDS NEAR THE PULLEYS, BELTS OR FAN. DO NOT WEAR LOOSE CLOTHING.** **NOTE: The conditions that set the DTC are not present at this time. The following list may help in identifying the intermittent condition.** With the engine running and at normal operating temperature, monitor the DRB parameters related to the DTC while wiggling the wire harness. Look for parameter values to change and/or a DTC to set. Review the DTC When Monitored and Set Conditions. If possible, try to duplicate the conditions under which the DTC was set. Refer to any Technical Service Bulletins (TSB) that may apply. Visually inspect the related wire harness. Look for any chafed, pierced, pinched, or partially broken wires. Visually inspect the related wire harness connectors. Look for broken, bent, pushed out, or corroded terminals. Were any of the above conditions present? Yes → Repair as necessary. Perform SKIS VERIFICATION. No → Test Complete.	All

Symptom:

U110C-NO FUEL LEVEL BUS MESSAGE

When Monitored and Set Condition:

U110C-NO FUEL LEVEL BUS MESSAGE

When Monitored: Ignition on.

Set Condition: No fuel level BUS messages received by the PCM for 20 seconds.

POSSIBLE CAUSES
DTC RESET
COMMUNICATE WITH BCM
FUEL LEVEL BUS MESSAGE
PCI BUS CIRCUIT OPEN FROM PCM TO BCM
BCM

TEST	ACTION	APPLICABILITY
1	**NOTE: If a fuel level circuit or performance DTC is set along with P1681, diagnose the circuit/performance DTC before continuing.** Turn the ignition on. With the DRBIII®, erase DTCs. Start the engine on and off several times. Leave the engine running for at least 20 second each time. With the DRBIII®, read DTCs. Does the DTC reset? Yes → Go To 2 No → Refer to the INTERMITTENT CONDITION symptom in the Driveability category. Perform POWERTRAIN VERIFICATION TEST VER - 1 - NGC.	All
2	Ignition on, engine not running. With the DRBIII®, attempt to communicate with the BCM. Can communication be established with the BCM? Yes → Go To 3 No → Refer to the Communication Category and perform the appropriate symptom related to no communication with BCM. Perform POWERTRAIN VERIFICATION TEST VER - 1 - NGC.	All
3	Turn the ignition on. Using the DRBIII®, read the Fuel Level parameter in the PCM. Does the DRBIII® display a fuel level value? Yes → Replace and program the Powertrain Control Module in accordance with the Service Information. Perform POWERTRAIN VERIFICATION TEST VER - 1 - NGC. No → Go To 4	All

U110C-NO FUEL LEVEL BUS MESSAGE — Continued

TEST	ACTION	APPLICABILITY
4	Turn the ignition off. Disconnect the PCM harness connectors. Disconnect the BCM harness connector. **CAUTION: DO NOT PROBE THE PCM HARNESS CONNECTORS. PROBING THE PCM HARNESS CONNECTORS WILL DAMAGE THE PCM TERMINALS RESULTING IN POOR TERMINAL TO PIN CONNECTION. INSTALL MILLER SPECIAL TOOL #8815 TO PERFORM DIAGNOSIS.** Measure the resistance of the PCI Bus circuit from the BCM harness connector to the appropriate terminal of special tool #8815. Is the resistance below 5.0 ohms? Yes → Replace BCM in accordance with the Service Information. Perform POWERTRAIN VERIFICATION TEST VER - 1 - NGC. No → Repair the PCI Bus circuit between the PCM and the BCM for an open. Perform POWERTRAIN VERIFICATION TEST VER - 1 - NGC.	All

Symptom:
*CHECKING PCM POWER AND GROUND CIRCUITS

POSSIBLE CAUSES
(A14) PCM FUSED B+ CIRCUIT
(A41) PCM FUSED IGNITION SWITCH OUTPUT CIRCUIT
(Z12) PCM GROUND CIRCUITS

TEST	ACTION	APPLICABILITY
1	**NOTE: The battery must be fully charged before continuing.** Turn the ignition off. Disconnect the PCM harness connector. **CAUTION: DO NOT PROBE THE PCM HARNESS CONNECTORS. PROBING THE PCM HARNESS CONNECTORS WILL DAMAGE THE PCM TERMINALS RESULTING IN POOR TERMINAL TO PIN CONNECTION. INSTALL MILLER SPECIAL TOOL #8815 TO PERFORM DIAGNOSIS.** Using a 12-volt test light connected to ground, probe the (A14) PCM Fused B+ circuit in the Pinout Box. Does the test light illuminate brightly? Yes → Go To 2 No → Repair the (A14) Fused B+ circuit. Perform POWERTRAIN VERIFICATION TEST VER - 1 - NGC.	All
2	Turn the ignition off. Disconnect the PCM harness connector. **CAUTION: DO NOT PROBE THE PCM HARNESS CONNECTORS. PROBING THE PCM HARNESS CONNECTORS WILL DAMAGE THE PCM TERMINALS RESULTING IN POOR TERMINAL TO PIN CONNECTION. INSTALL MILLER SPECIAL TOOL #8815 TO PERFORM DIAGNOSIS.** Turn the ignition on. Using a 12-volt test light connected to ground, probe the (A41) PCM Fused Ignition Switch Output circuit in the Pinout Box. Does the test light illuminate brightly? Yes → Go To 3 No → Repair the (A41) Ignition Switch Output circuit Perform POWERTRAIN VERIFICATION TEST VER - 1 - NGC.	All
3	Turn the ignition off. Disconnect the PCM harness connector. **CAUTION: DO NOT PROBE THE PCM HARNESS CONNECTORS. PROBING THE PCM HARNESS CONNECTORS WILL DAMAGE THE PCM TERMINALS RESULTING IN POOR TERMINAL TO PIN CONNECTION. INSTALL MILLER SPECIAL TOOL #8815 TO PERFORM DIAGNOSIS.** Using a 12-volt test light connected to battery voltage, probe the (Z12) PCM ground circuits in the Pinout Box. Does the test light illuminate brightly? Yes → Test Complete. No → Repair the (Z12) PCM ground circuits. Perform POWERTRAIN VERIFICATION TEST VER - 1 - NGC.	All

Symptom:

*CHECKING THE A/C RELAY OUTPUT

POSSIBLE CAUSES
A/C CLUTCH RELAY OPERATION
GROUND CIRCUIT OPEN
A/C CLUTCH
(A17) FUSED B+ CIRCUIT
(C3) A/C CLUTCH OUTPUT CIRCUIT
A/C CLUTCH RELAY

TEST	ACTION	APPLICABILITY
1	**NOTE: Ensure that the refrigerant system is properly charged. Refer to the appropriate Service Information.** Turn the ignition on. With the DRBIII®, actuate the A/C Clutch Relay. Is the A/C Clutch actuating? Yes → The A/C Clutch System operating properly at this time. Perform POWERTRAIN VERIFICATION TEST VER - 2 - NGC. No → Go To 2	All
2	Turn the ignition off. Disconnect the A/C Clutch harness connector. Measure the Ground circuit in the A/C Clutch harness connector to ground. Is the resistance below 5.0 ohms? Yes → Go To 3 No → Repair the Ground circuit for an open. Perform POWERTRAIN VERIFICATION TEST VER - 2 - NGC.	All
3	Disconnect the A/C Clutch harness connector. Turn the ignition on. With the DRBIII®, actuate the A/C Clutch Relay. Measure the voltage of the A/C Clutch Relay Output circuit in the A/C Clutch harness connector. Is the voltage above 11.0 volts? Yes → Replace the A/C Clutch. Perform POWERTRAIN VERIFICATION TEST VER - 2 - NGC. No → Go To 4	All
4	Turn the ignition off. Remove the A/C Clutch Relay from the PDC. Using a 12-volt test light connected to ground, probe the (A17) Fused B+ circuit in the PDC. Does the test light illuminate brightly? Yes → Go To 5 No → Repair the (A17) Fused B+ circuit. Inspect fuses and replace as necessary. Perform POWERTRAIN VERIFICATION TEST VER - 2 - NGC.	All

*CHECKING THE A/C RELAY OUTPUT — Continued

TEST	ACTION	APPLICABILITY
5	Turn the ignition off. Disconnect the A/C Clutch Relay from the PDC. Disconnect the A/C Clutch harness connector. Measure the resistance of the (C3) A/C Clutch Relay Output circuit between the PDC and the A/C Clutch harness connector. Is the resistance below 5.0 ohms? Yes → Replace the A/C Clutch Relay. Perform POWERTRAIN VERIFICATION TEST VER - 2 - NGC. No → Repair the (C3) A/C Clutch Relay Output circuit for an open. Perform POWERTRAIN VERIFICATION TEST VER - 2 - NGC.	All

Symptom List:

ANTENNA FAILURE
COP FAILURE
EEPROM FAILURE
RAM FAILURE
ROM FAILURE
SERIAL LINK INTERNAL FAULT
STACK OVERFLOW FAILURE

Test Note: All symptoms listed above are diagnosed using the same tests. The title for the tests will be ANTENNA FAILURE.

When Monitored and Set Condition:

ANTENNA FAILURE

When Monitored: Every 250 milliseconds with the ignition on.

Set Condition: The SKREEM'S microcontroller determines that an antenna circuit fault has occurred for 2.0 consecutive seconds.

COP FAILURE

When Monitored: With the ignition on.

Set Condition: The COP timer is not reset by the microcontroller at 65.5 millisecond intervals.

EEPROM FAILURE

When Monitored: With the ignition on.

Set Condition: When the value written to EEPROM memory does not equal the value read back after the written operation.

RAM FAILURE

When Monitored: With the ignition on.

Set Condition: The RAM fails a test that checks the RAM's ability to retain memory.

ROM FAILURE

When Monitored: With the ignition on.

Set Condition: The RAM fails a test that checks the RAM's ability to retain memory.

SERIAL LINK INTERNAL FAULT

When Monitored: With the ignition on.

Set Condition: The SKREEM fails an internal J1850 communication self test.

ANTENNA FAILURE — Continued

STACK OVERFLOW FAILURE

When Monitored: With the ignition on.

Set Condition: The microcontroller has exceeded its memory space limit.

POSSIBLE CAUSES
SKREEM INTERNAL DTC FAILURE

TEST	ACTION	APPLICABILITY
1	**NOTE: This trouble code indicates an internal SKREEM fault.** With the DRBIII®, read and record the SKREEM DTCs and then erase the SKREEM DTCs Perform 5 ignition key cycles, leaving the ignition key on for a minimum of 90 seconds per cycle. With the DRBIII® , read the SKREEM DTCs. Did the same SKREEM DTC return? Yes → Replace and program the SKREEM in accordance with the Service Information. Perform SKREEM VERIFICATION TEST - VER 1A. No → Test Complete.	All

Symptom:
BCM MESSAGE MISSING

When Monitored and Set Condition:

BCM MESSAGE MISSING

When Monitored: With the ignition on.

Set Condition: The SKREEM does not recieve an expected BCM PCI Bus message.

POSSIBLE CAUSES
ATTEMPT TO COMMUNICATE WITH ANOTHER MODULE
INTERMITTENT WIRING HARNESS PROBLEM
SKREEM

TEST	ACTION	APPLICABILITY
1	Turn the ignition on. With the DRB, erase ECM DTCs. Turn the ignition off, wait 30 seconds, then start and idle the engine for at least 30 seconds. With the DRB, read SKREEM DTCs. Did this DTC set again? Yes → Go To 2 No → Go To 3	All
2	Turn the ignition on. With the DRB, attempt to communicate with the Body Control Module. Was the DRB able to I/D or communicate with the BCM? Yes → Replace and program the Sentry Key Remote Entry Module in accordance with the Service Information. Perform SKREEM VERIFICATION TEST - VER 1A. No → Refer to symptom list for problems related to Communication with the BCM. Perform SKREEM VERIFICATION TEST - VER 1A.	All
3	Turn the ignition off. **Note: Visually inspect the related wiring harness. Look for any chafed, pierced, pinched, or partially broken wires.** **NOTE: Visually inspect the related wiring harness connectors. Look for broken, bent, pushed out, or corroded terminals.** **Note: Refer to any Technical Service Bulletins (TSB) that may apply.** Were any problems found? Yes → Repair wiring harness/connectors as necessary. Perform SKREEM VERIFICATION TEST - VER 1A. No → Test Complete.	All

Symptom List:

PCM STATUS FAILURE
SERIAL LINK EXTERNAL FAULT

Test Note: All symptoms listed above are diagnosed using the same tests. The title for the tests will be PCM STATUS FAILURE.

When Monitored and Set Condition:

PCM STATUS FAILURE

When Monitored: With the ignition on.

Set Condition: This DTC exists when a PCM STATUS message was not received from the PCM for at least 20.0 consecutive seconds.

SERIAL LINK EXTERNAL FAULT

When Monitored: At ignition on, after ignition on during any rolling code handshake that occurs with the ECM due to a SKREEM reset, or during SECRET KEY transfers to the ECM.

Set Condition: When the SKREEM does not receive an expected PCI BUS message transmission acknowledgement from the ECM after 3 transmit attempts.

POSSIBLE CAUSES
INTERMITTENT WIRING HARNESS PROBLEM
WIRING HARNESS INSPECTION
SKREEM/ECM

TEST	ACTION	APPLICABILITY
1	**NOTE: Ensure the ECM has proper power and ground connections before continuing.** With the DRBIII®, read and record the SKREEM DTCs then erase the SKREEM DTCs. Turn the ignition off. Wait 2 minutes. Turn the ignition on. With the DRBIII®, read the SKREEM DTCs. Does the DRBIII® display the DTC that was previously erased? Yes → Go To 2 No → Go To 4	All

PCM STATUS FAILURE — Continued

TEST	ACTION	APPLICABILITY
2	Turn the ignition off. **NOTE: Visually inspect the related wiring harness and CCD/PCI Bus (whichever applicable) circuits. Look for any chafed, pierced, pinched, or partially broken wires.** **NOTE: Visually inspect the related wiring harness connectors. Look for broken, bent, pushed out, or corroded terminals.** **Note: Refer to any Technical Service Bulletins (TSB) that may apply.** Were any problems found? Yes → Repair as necessary. Perform SKREEM VERIFICATION TEST - VER 1A. No → Go To 3	All
3	**NOTE: Before proceeding it will be necessary to obtain the SKREEM PIN.** Turn the ignition on. With the DRBIII®, display and erase all ECM and SKREEM DTC's. Perform 5 ignition key cycles, leaving the ignition key on for a minimum of 90 seconds per cycle. With the DRBIII®, read the SKREEM DTCs. Does the code appear? Yes → Replace and program the Engine Control Module in accordance with the Service Information. Perform SKREEM VERIFICATION TEST - VER 1A. No → Test Complete.	All
4	Turn the ignition off. **Note: Visually inspect the related wiring harness. Look for any chafed, pierced, pinched, or partially broken wires.** **NOTE: Visually inspect the related wiring harness connectors. Look for broken, bent, pushed out, or corroded terminals.** **Note: Refer to any Technical Service Bulletins (TSB) that may apply.** Were any problems found? Yes → Repair wiring harness/connectors as necessary. Perform SKREEM VERIFICATION TEST - VER 1A. No → Test Complete.	All

Symptom List:

ROLLING CODE FAILURE
VIN MISMATCH

Test Note: All symptoms listed above are diagnosed using the same tests. The title for the tests will be ROLLING CODE FAILURE.

When Monitored and Set Condition:

ROLLING CODE FAILURE

When Monitored: At ignition on, after ignition on during any rolling code handshake that occurs with the ECM due to a SKREEM or ECM reset.

Set Condition: When a PCM STATUS message with a Valid Key status is not received by the SKREEM within 3.5 seconds of transmitting the last Valid Key Code message to the ECM.

VIN MISMATCH

When Monitored: With the ignition on.

Set Condition: When the VIN received from the ECM does not match the VIN stored in the SKREEM's EEPROM.

POSSIBLE CAUSES
VERIFYING ECM VIN
REPLACE SKREEM AND CHECK DTC'S
INTERMITTENT WIRING HARNESS PROBLEM
ECM

TEST	ACTION	APPLICABILITY
1	With the DRBIII®, erase the SKREEM DTCs. Turn the ignition off. Wait 10 seconds. Turn the ignition on and wait 2 minutes. With the DRBIII®, read the SKREEM DTCs. Does the DRBIII® display the DTC that was previously erased? Yes → Go To 2 No → Go To 4	All

ROLLING CODE FAILURE — Continued

TEST	ACTION	APPLICABILITY
2	Turn the ignition on. With the DRBIII®, select Engine system from the main menu. Display and record the Vehicle Identification Number. **NOTE: Ensure that a VIN has been programmed into the ECM. If a VIN is not displayed, attempt to program the ECM with the correct vehicle VIN before continuing.** Does the VIN recorded from the ECM match the VIN of the vehicle? Yes → Go To 3 No → Replace and program the Engine Control Module in accordance with the Service Information. Perform SKREEM VERIFICATION TEST - VER 1A.	All
3	Turn the ignition off. Replace and program the Sentry Key Remote Entry Module in accordance with the Service Information. Turn the ignition on. With the DRBIII®, display and clear all ECM and SKREEM DTC's. Perform 5 ignition key cycles leaving the ignition key on for 90 seconds per cycle. With the DRBIII®, check for SKREEM DTCs. Does the DRBIII® display the same DTC? Yes → Replace and program the Engine Control Module in accordance with the Service Information. Perform SKREEM VERIFICATION TEST - VER 1A. No → The repair is complete. Perform SKREEM VERIFICATION TEST - VER 1A.	All
4	Turn the ignition off. **Note: Visually inspect the related wiring harness. Look for any chafed, pierced, pinched, or partially broken wires.** **NOTE: Visually inspect the related wiring harness connectors. Look for broken, bent, pushed out, or corroded terminals.** **Note: Refer to any Technical Service Bulletins (TSB) that may apply.** Were any problems found? Yes → Repair wiring harness/connectors as necessary. Perform SKREEM VERIFICATION TEST - VER 1A. No → Test Complete.	All

Symptom List:

TRANSPONDER COMMUNICATION FAILURE
TRANSPONDER ID MISMATCH
TRANSPONDER RESPONSE MISMATCH

Test Note: All symptoms listed above are diagnosed using the same tests. The title for the tests will be TRANSPONDER COMMUNICATION FAILURE.

When Monitored and Set Condition:

TRANSPONDER COMMUNICATION FAILURE

When Monitored: At ignition on and during Key Programming Mode.

Set Condition: When the SKREEM does not receive a transponder response after 8 consecutive transponder read attempts within 2.0 seconds.

TRANSPONDER ID MISMATCH

When Monitored: At ignition on and during Key Programming Mode.

Set Condition: When the transponder ID read by the SKREEM does not match any of the transponder ID's stored in the SKREEM's memory.

TRANSPONDER RESPONSE MISMATCH

When Monitored: At ignition on and during Key Programming Mode.

Set Condition: When the transponder's crypto algorithm result fails to match the SKREEM's result.

POSSIBLE CAUSES
CHECKING MULTIPLE KEY OPERATION
SKREEM
INTERMITTENT WIRING HARNESS PROBLEM
REPLACE IGNITION KEY

TRANSPONDER COMMUNICATION FAILURE — Continued

TEST	ACTION	APPLICABILITY
1	With the DRBIII®, read and record the SKREEM DTCs. With the DRBIII®, erase the SKREEM DTCs. **NOTE: Perform the following test several times to ensure the DTC is current.** Turn the ignition off. Wait 10 seconds. Turn the ignition on. With the DRBIII®, read the SKREEM DTCs. Does the DRBIII® display the DTC that was previously erased? Yes → Go To 2 No → Go To 7	All
2	Are there multiple vehicle ignition keys available? Yes → Go To 3 No → Go To 4	All
3	**NOTE: Perform the following steps using one of the vehicle ignition keys. When finished, repeat the procedure using each of the other vehicle keys one at a time.** With the DRBIII®, erase the SKREEM DTCs. Turn the ignition off. Wait 10 seconds. Turn the ignition on. With the DRBIII®, read the SKREEM DTCs. Is the DTC present for all ignition keys? Yes → Replace and program the Sentry Key Remote Entry Module in accordance with the Service Information. Perform SKREEM VERIFICATION TEST - VER 1A. No → Replace the ignition key(s) that cause the SKREEM DTC. Perform SKREEM VERIFICATION TEST - VER 1A.	All
4	With the DRBIII®, attempt to reprogram the ignition keys to the SKREEM. With the DRBIII®, erase the SKREEM DTCs. Wait 10 seconds. Turn the ignition on. With the DRBIII®, read the SKREEM DTCs. Does the DTC set again? Yes → Go To 5 No → Test Complete.	All
5	Replace the ignition key with a new key. With the DRBIII®, program the new ignition key to the SKREEM. With the DRBIII®, erase the SKREEM DTCs. Turn the ignition off. Wait 10 seconds. Turn the ignition on. With the DRBIII®, read the SKREEM DTCs. Does the DTC set again? Yes → Go To 6 No → Test Complete.	All

TRANSPONDER COMMUNICATION FAILURE — Continued

TEST	ACTION	APPLICABILITY
6	If there are no possible causes remaining, view repair. Repair Replace and program the Sentry Key Remote Entry Module in accordance with the Service Information. Perform SKREEM VERIFICATION TEST - VER 1A.	All
7	Turn the ignition off. **Note: Visually inspect the related wiring harness. Look for any chafed, pierced, pinched, or partially broken wires.** **NOTE: Visually inspect the related wiring harness connectors. Look for broken, bent, pushed out, or corroded terminals.** **Note: Refer to any Technical Service Bulletins (TSB) that may apply.** Were any problems found? Yes → Repair wiring harness/connectors as necessary. Perform SKREEM VERIFICATION TEST - VER 1A. No → Test Complete.	All

Symptom:
UNPROGRAMMED KEY

When Monitored and Set Condition:

UNPROGRAMMED KEY

When Monitored: With the ignition on.

Set Condition: The Sentry Key Remote Entry Module has not been programmed.

POSSIBLE CAUSES
VERIFY ACTIVE DTC

TEST	ACTION	APPLICABILITY
1	Turn the ignition on. With the DRBIII®, attempt program the SKREEM in accordance with the Service Information. With the DRBIII®, erase SKREEM DTCs. Perform 5 ignition key cycles, leaving the ignition key on for a minimum of 90 seconds per cycle. With the DRBIII®, read SKREEM DTCs. Did this DTC set again? Yes → Replace the Sentry Key Remote Entry Module in accordance with the Service Information. Perform SKREEM VERIFICATION TEST - VER 1A. No → Test Complete.	All

Symptom:
*CHECKING FUEL DELIVERY

POSSIBLE CAUSES
FUEL PUMP RELAY
FUEL PRESSURE OUT OF SPECS
RESTRICTED FUEL SUPPLY LINE
FUEL PUMP INLET STRAINER PLUGGED
FUEL PUMP MODULE
FUEL DELIVERY SYSTEM OPERATION
FUEL PUMP RELAY FUSED B+ CIRCUIT
(A141) FUEL PUMP RELAY OUTPUT CIRCUIT OPEN
(Z1) FUEL PUMP GROUND CIRCUIT OPEN/HIGH RESISTANCE
FUEL PUMP MODULE

TEST	ACTION	APPLICABILITY
1	Turn the ignition on. With the DRBIII®, actuate the ASD Fuel System test. **Note: It may be necessary to use a mechanics stethoscope in the next step.** Listen for fuel pump operation at the fuel tank. Does the Fuel Pump operate? Yes → Go To 2 No → Go To 5 **Caution: Stop All Actuations.**	All
2	Turn the ignition off. **WARNING: The fuel system is under a constant pressure even with the engine off. Before testing or servicing any fuel system hose, fitting or line, the fuel system pressure must be released.** Install a fuel gauge. Turn the ignition on. With the DRBIII®, actuate the ASD Fuel System test and observe the fuel pressure gauge. **NOTE: Fuel pressure specification is 400 KPa +/- 34 KPa (58 psi +/- 5 psi).** Choose a conclusion that best matches your fuel pressure reading. Below Specification Go To 3 Within Specification The Fuel Delivery System is operating normally. Perform POWERTRAIN VERIFICATION TEST VER - 1 - NGC. Above Specification Replace the fuel filter/fuel pressure regulator. Perform POWERTRAIN VERIFICATION TEST VER - 1 - NGC. **Caution: Stop All Actuations.**	All

*CHECKING FUEL DELIVERY — Continued

TEST	ACTION	APPLICABILITY
3	Turn the ignition off. **WARNING: The fuel system is under a constant pressure even with the engine off. Before testing or servicing any fuel system hose, fitting or line, the fuel system pressure must be released.** Raise vehicle on hoist, and disconnect the fuel pressure line at the fuel pump module. Install special 5/16 fuel line adapter tool #6539 between the disconnected fuel line and the fuel pump module. Attach a fuel pressure test gauge to the T fitting on the tool #6539 Turn the ignition on. With the DRBIII®, actuate the ASD Fuel System test and observe the fuel pressure gauge. **NOTE: Fuel pressure specification is 400 KPa +/- 34 KPa (58 psi +/- 5 psi).** Is the fuel pressure within specification now? Yes → Repair/replace fuel supply line as necessary. Perform POWERTRAIN VERIFICATION TEST VER - 1 - NGC. No → Go To 4 **Caution: Stop All Actuations.**	All
4	Turn the ignition off. **WARNING: The fuel system is under a constant pressure even with the engine off. Before testing or servicing any fuel system hose,fitting or line, the fuel system pressure must be released.** Remove the Fuel Pump Module and inspect the Fuel Inlet Strainer. Is the Fuel Inlet Strainer plugged? Yes → Replace the Fuel Pump Inlet Strainer. Perform POWERTRAIN VERIFICATION TEST VER - 1 - NGC. No → Replace the Fuel Pump Module. Perform POWERTRAIN VERIFICATION TEST VER - 1 - NGC.	All
5	Turn the ignition off. Disconnect the fuel pump module harness connector. Turn the ignition on. With the DRBIII®, actuate the ASD Fuel System test. Using a 12 volt test light connected to ground, probe the (A141) Fuel Pump Relay Output circuit at the Fuel Pump Module harness connector. Does the test light illuminate brightly? Yes → Go To 6 No → Go To 8 **Caution: Stop All Actuations.**	All
6	Turn the ignition off. Disconnect the Fuel Pump Module harness connector. **Note: Check connectors - It is critical that the connector is free from any signs of corrosion or deformities - Clean/repair as necessary.** Using a test light connected to battery voltage, probe the (Z1) Fuel Pump ground circuit at the Fuel Pump Module harness connector. Does the test light illuminate brightly? Yes → Go To 7 No → Repair the open/high resistance in the (Z1) fuel pump ground circuit. Perform POWERTRAIN VERIFICATION TEST VER - 1 - NGC.	All

*CHECKING FUEL DELIVERY — Continued

TEST	ACTION	APPLICABILITY
7	If there are no possible causes remaining, view repair. Repair Replace the Fuel Pump Module. Perform POWERTRAIN VERIFICATION TEST VER - 1 - NGC.	All
8	Turn the ignition off. Remove the Fuel Pump Relay from the PDC. With a 12 volt test light connected to ground, probe the Fuel Pump Relay Fused B+ circuit at the PDC. Does the test light illuminate? Yes → Go To 9 No → Repair the Fuel Pump Realy Fused B+ circuit. Check for open fuse in the PDC. Perform POWERTRAIN VERIFICATION TEST VER - 1 - NGC.	All
9	Turn the ignition off. Remove the Fuel Pump Relay from the PDC. Disconnect the Fuel Pump Module harness connector. **NOTE: Check connectors - It is critical that the connector is free from any signs of corrosion or deformities** Measure the resistance of the (A141) Fuel Pump Relay Output circuit from the relay connector to the fuel pump module connector. Is the resistance below 5.0 ohms? Yes → Replace the Fuel Pump Relay. Perform POWERTRAIN VERIFICATION TEST VER - 1 - NGC. No → Repair the (A141) Fuel Pump Relay Output circuit for an open. Perform POWERTRAIN VERIFICATION TEST VER - 1 - NGC.	All

Symptom:
*CHECKING FUEL PRESSURE LEAK DOWN

POSSIBLE CAUSES
CHECKING FUEL PRESSURE
FUEL PUMP MODULE
CHECKING FUEL LEAK DOWN

TEST	ACTION	APPLICABILITY
1	**Warning: The fuel system is under a constant pressure (even with the engine off). Before testing or servicing any fuel system hose, fitting or line, the fuel system pressure must be released.** Install a fuel pressure gauge. Start the engine and observe the fuel pressure reading. **NOTE: Fuel pressure specification is 400 KPa +/- 34 KPa (58 psi +/- 5 psi).** Turn the ignition off. Monitor the fuel pressure gauge for a minimum of 5 minutes. **NOTE: The pressure should not fall below 241 KPa (35 psi)** Does the fuel pressure gauge fall below the above specification? Yes → Go To 2 No → Fuel System is operating normally. Perform POWERTRAIN VERIFICATION TEST VER - 2 - NGC.	All
2	**NOTE: Before continuing visually and physically inspect the fuel delivery system for external leaks or damage. Repair /replace as necessary.** Turn the ignition off. **WARNING: The fuel system is under a constant pressure even with the engine off. Before testing or servicing any fuel system hose, fitting or line, the fuel system pressure must be released.** Install special 5/16 fuel line adapter tool #6539. Attach a fuel pressure test gauge to the T fitting on the tool #6539 Start the engine and allow the fuel system to reach maximum pressure. Turn the ignition off. **NOTE: Fuel specification is 400 KPa +/- 34 KPa (58 psi +/- 5 psi).** Using special tool #C4390, Hose Clamp Pliers, slowly clamp off the rubber hose on the Fuel Pressure adapter between the fuel pressure gauge and the engine. Monitor the fuel pressure gauge for a minimum of 5 minutes. **NOTE: The pressure should not fall below 241 KPa (35 psi)** Does the fuel pressure gauge fall below the above specification? Yes → Check the Fuel Delivery System between the fuel gauge and the fuel pump module. Inspect the seal points and the fuel lines for signs of fuel leakage. Repair/Replace as necessary. If OK, replace the Fuel Pump Module. Perform POWERTRAIN VERIFICATION TEST VER - 2 - NGC. No → Check the Fuel Delivery System between the fuel gauge and the fuel pump module. Inspect the seal points and the fuel lines for signs of fuel leakage. Repair/Replace as necessary. If OK, replace the Fuel Pump Module. Perform POWERTRAIN VERIFICATION TEST VER - 2 - NGC.	All

Symptom:
*CHECKING HARD START (FUEL DELIVERY SYSTEM)

POSSIBLE CAUSES
RESTRICTED FUEL SUPPLY LINE
FUEL PUMP MODULE
FUEL PUMP INLET STRAINER PLUGGED
FUEL INJECTOR(S)
FUEL PUMP MODULE
FUEL CONTAMINATION

TEST	ACTION	APPLICABILITY
1	Turn the ignition off. **WARNING: The fuel system is under a constant pressure even with the engine off. Before testing or servicing any fuel system hose, fitting or line, the fuel system pressure must be released.** Install a fuel gauge. Turn the ignition on. With the DRBIII®, actuate the ASD Fuel System test and observe the fuel pressure gauge. **NOTE: Fuel pressure specification is 400 KPa +/- 34 KPa (58 psi +/- 5 psi).** Choose a conclusion that best matches your fuel pressure reading. Below Specification Go To 2 Within Specification Go To 4	All
2	Turn the ignition off. **WARNING: The fuel system is under a constant pressure even with the engine off. Before testing or servicing any fuel system hose, fitting or line, the fuel system pressure must be released.** Raise vehicle on hoist, and disconnect the fuel supply line at the fuel pump module. Install special 5/16 fuel line adapter tool #6539 between the disconnected fuel line and the fuel pump module. Attach a fuel pressure test gauge to the T fitting on the tool #6539 Turn the ignition on. With the DRBIII®, actuate the ASD Fuel System test and observe the fuel pressure gauge. **NOTE: Fuel pressure specification is 400 KPa +/- 34 KPa (58 psi +/- 5 psi).** Is the fuel pressure within specification? Yes → Visually and physically inspect the fuel supply lines between the fuel tank and the fuel rail. Repair/replace as necessary. If no problem is found replace the fuel filter. Perform POWERTRAIN VERIFICATION TEST VER - 2 - NGC. No → Go To 3	All

*CHECKING HARD START (FUEL DELIVERY SYSTEM) — Continued

TEST	ACTION	APPLICABILITY
3	Turn the ignition off. **WARNING: The fuel system is under a constant pressure even with the engine off. Before testing or servicing any fuel system hose,fitting or line, the fuel system pressure must be released.** Remove the Fuel Pump Module and inspect the Fuel Inlet Strainer. Is the Fuel Inlet Strainer plugged? Yes → Replace the Fuel Pump Inlet Strainer. Perform POWERTRAIN VERIFICATION TEST VER - 2 - NGC. No → Replace the Fuel Pump Module. Perform POWERTRAIN VERIFICATION TEST VER - 2 - NGC.	All
4	Fuel pressure gauge still installed. **NOTE: Fuel pressure specification is 400 KPa +/- 34 KPa (58 psi +/- 5 psi).** Ensure the fuel pressure is at maximum pressure. Monitor the fuel pressure gauge for a minimum of 5 minutes. **NOTE: The pressure should not fall below 241 KPa (35 psi)** Does the fuel pressure gauge fall below the above specification? Yes → Go To 5 No → Check the fuel for contaminants. Perform POWERTRAIN VERIFICATION TEST VER - 2 - NGC.	All
5	**NOTE: Before continuing visually and physically inspect the fuel delivery system for external leaks or damage. Repair /replace as necessary.** Turn the ignition off. **WARNING: The fuel system is under a constant pressure even with the engine off. Before testing or servicing any fuel system hose, fitting or line, the fuel system pressure must be released.** Install special 5/16 fuel line adapter tool #6539. Attach a fuel pressure test gauge to the T fitting on the tool #6539 Start the engine and allow the fuel system to reach maximum pressure. Turn the ignition off. **NOTE: Fuel specification is 400 KPa +/- 34 KPa (58 psi +/- 5 psi).** Using special tool #C4390, Hose Clamp Pliers, slowly clamp off the rubber hose on the Fuel Pressure adapter between the fuel pressure gauge and the engine. Monitor the fuel pressure gauge for a minimum of 5 minutes. **NOTE: The pressure should not fall below 241 KPa (35 psi)** Does the fuel pressure gauge fall below the above specification? Yes → Check the Fuel Delivery System between the fuel gauge and the fuel pump module. Inspect the seal points and the fuel lines for signs of fuel leakage. Repair/Replace as necessary. If OK, replace the Fuel Pump Module. Perform POWERTRAIN VERIFICATION TEST VER - 2 - NGC. No → Check the Fuel Delivery System between the fuel gauge and the fuel injectors. Inspect the seal points and the fuel lines for signs of fuel leakage. Repair/Replace as necessary. If OK, replace the leaking Fuel Injector(s). Perform POWERTRAIN VERIFICATION TEST VER - 2 - NGC.	All

Symptom:
*ENGINE CRANKS DOES NOT START

POSSIBLE CAUSES
FUEL PUMP RELAY
NO START PRE-TEST
POWERTRAIN FUSES OPEN
FUEL PRESSURE OUT OF SPECS
RESTRICTED FUEL SUPPLY LINE
FUEL PUMP INLET STRAINER PLUGGED
FUEL PUMP MODULE
FUEL PUMP RELAY FUSED B+ CIRCUIT
OTHER POSSIBLE CAUSES FOR NO START
FUEL PUMP RELAY OUTPUT CIRCUIT OPEN
FUEL PUMP GROUND CIRCUIT OPEN/HIGH RESISTANCE
IPM FUSE & RELAY CENTER
FUEL PUMP MODULE

TEST	ACTION	APPLICABILITY
1	**Note: The following list of items must be checked before continuing with any no start tests.** The battery must be fully charged and pass a load test. A low charge battery may produce invalid test results. If the battery is low, charge the battery and then attempt to start the vehicle by cranking the engine for 15 seconds, 3 consecutive times. This will allow any DTC's to set that may have been erased due to a dead battery. Ensure the Battery, Ignition voltage and Ground to the PCM are ok. Make sure the PCM communicates with the DRBIII® and that there are no DTC's stored in the PCM memory. If the PCM reports a No Response condition, refer to the Communication category for the proper tests. Read the PCM DTC's with the DRBIII®. If any DTC's are present, they must be repaired before continuing with any other No Start diagnostic tests. Refer to the Symptom list for the related P-code that is reported by the PCM. Ensure that the PCI bus is functional. Attempt to communicate with the Instrument Cluster and SKIM, If you are unable to establish communicate refer to the Communication category for the proper symptoms. The Sentry Key Immobilizer System must be operating properly. Check for proper communication with the DRBIII® and check for DTC's that may be stored in the Sentry Key Immobilizer Module (SKIM). repair the DTC(s) before continuing. If no DTC's are found, using the DRBIII® select Clear PCM (Batt Disconnect). Crank the engine several times. Using the DRBIII®, read DTC's. If a DTC is present perform the DTC diagnostics before continuing. Were any problems found? Yes → Repair as necessary. Perform POWERTRAIN VERIFICATION TEST VER - 1. No → Go To 2	All

*ENGINE CRANKS DOES NOT START — Continued

TEST	ACTION	APPLICABILITY
2	Check for any open fuses in the IPM that may be related to the No Start condition. Are any of the fuses open? Yes → Using the wiring diagram/schematic as a guide, inspect the wiring and connectors, repair as necessary. Replace the Fuse. Perform POWERTRAIN VERIFICATION TEST VER - 1. No → Go To 3	All
3	Turn the ignition on. With the DRBIII®, actuate the ASD Fuel System test. **Note: It may be necessary to use a mechanics stethoscope in the next step.** Listen for fuel pump operation at the fuel tank. Does the Fuel Pump operate? Yes → Go To 4 No → Go To 8 **Caution: Stop All Actuations.**	All
4	Turn the ignition off. **WARNING: The fuel system is under a constant pressure even with the engine off. Before testing or servicing any fuel system hose, fitting or line, the fuel system pressure must be released.** Install a fuel pressure gauge. Turn the ignition on. With the DRBIII®, actuate the ASD Fuel System test and observe the fuel pressure gauge. **NOTE: Fuel pressure specification is 400 kPa +/- 34 kPa (58 psi +/- 5 psi).** Choose a conclusion that best matches your fuel pressure reading. Below Specification Go To 5 Within Specification Go To 7 Above Specification Replace the fuel filter/fuel pressure regulator. Perform POWERTRAIN VERIFICATION TEST VER - 1. **Caution: Stop All Actuations.**	All

*ENGINE CRANKS DOES NOT START — Continued

TEST	ACTION	APPLICABILITY
5	Turn the ignition off. **WARNING: The fuel system is under a constant pressure even with the engine off. Before testing or servicing any fuel system hose, fitting or line, the fuel system pressure must be released.** Raise vehicle on hoist, and disconnect the fuel pressure line at the fuel pump module. Install special 5/16 fuel line adapter tool #6539 between the disconnected fuel line and the fuel pump module. Attach a fuel pressure test gauge to the T fitting on the tool #6539 Turn the ignition on. With the DRBIII®, actuate the ASD Fuel System test and observe the fuel pressure gauge. **NOTE: Fuel pressure specification is 400 KPa +/- 34 KPa (58 psi +/- 5 psi).** Is the fuel pressure within specification now? Yes → Repair/replace fuel supply line as necessary. Perform POWERTRAIN VERIFICATION TEST VER - 1. No → Go To 6 **Caution: Stop All Actuations.**	All
6	Turn the ignition off. **WARNING: The fuel system is under a constant pressure even with the engine off. Before testing or servicing any fuel system hose,fitting or line, the fuel system pressure must be released.** Remove the Fuel Pump Module and inspect the Fuel Inlet Strainer. Is the Fuel Inlet Strainer plugged? Yes → Replace the Fuel Pump Inlet Strainer. Perform POWERTRAIN VERIFICATION TEST VER - 1. No → Replace the Fuel Pump Module. Perform POWERTRAIN VERIFICATION TEST VER - 1.	All
7	The following items need to be checked as a possible cause for a no start condition. Refer to any Technical Service Bulletins that may apply to the symptom. The spark plugs must be free from fuel, oil, coolant and/or any foreign material or deposits. The fuel must be free from contamination. The exhaust may be free from restrictions. The engine compression must be within specifications. The engine valve timing must be within specifications. The engine must be free from vacuum leaks. Were any of the above conditions found? Yes → Repair as necessary. Perform POWERTRAIN VERIFICATION TEST VER - 1. No → Test Complete.	All

*ENGINE CRANKS DOES NOT START — Continued

TEST	ACTION	APPLICABILITY
8	Turn the ignition off. Disconnect the fuel pump module harness connector. Turn the ignition on. With the DRBIII®, actuate the ASD Fuel System test. Using a 12 volt test light connected to ground, probe the Fuel Pump Relay Output circuit at the Fuel Pump Module harness connector. Does the test light illuminate brightly? Yes → Go To 9 No → Go To 11 **Caution: Stop All Actuations.**	All
9	Turn the ignition off. Disconnect the Fuel Pump Module harness connector. **Note: Check connectors - It is critical that the connector is free from any signs of corrosion or deformities - Clean/repair as necessary.** Using a 12 - volt test light connected to battery voltage, probe the Fuel Pump ground circuit at the Fuel Pump Module harness connector. Does the test light illuminate brightly? Yes → Go To 10 No → Repair the open/high resistance in the fuel pump ground circuit. Perform POWERTRAIN VERIFICATION TEST VER - 1.	All
10	If there are no possible causes remaining, view repair. Repair Replace the Fuel Pump Module. Perform POWERTRAIN VERIFICATION TEST VER - 1.	All
11	Turn the ignition off. Remove the Fuel Pump Relay from the IPM. With a 12 volt test light connected to ground, probe the Fuel Pump Relay Fused B+ circuit in the IPM. Does the test light illuminate? Yes → Go To 12 No → Check for an open Fuel Pump fuse, repair cause of open. If OK, replace the IPM Fuse & Relay Center. Perform POWERTRAIN VERIFICATION TEST VER - 1.	All
12	Turn the ignition off. Disconnect the IPM harness connector. Disconnect the Fuel Pump Module harness connector. Measure the resistance of the Fuel Pump Relay Output circuit between the IPM harness connector and the Fuel Pump Module connector. Is the resistance below 5.0 ohms? Yes → Go To 13 No → Repair the open fuel pump relay output circuit. Perform POWERTRAIN VERIFICATION TEST VER - 1.	All

*ENGINE CRANKS DOES NOT START — Continued

TEST	ACTION	APPLICABILITY
13	**NOTE: Ensure all IPM harness connector are connected.** Turn the ignition off. Disconnect the Fuel Pump Module harness connector. Remove the Fuel Pump Relay from the IPM. Measure the resistance of the Fuel Pump Relay Output circuit between the IPM and the Fuel Pump Module harness connector. Is the resistance below 5.0 ohms? Yes → Replace the Fuel Pump Relay. Perform POWERTRAIN VERIFICATION TEST VER - 1. No → Replace the IPM Fused & Relay Center. Perform POWERTRAIN VERIFICATION TEST VER - 1.	All

Symptom:
*NO CRANK CONDITION

POSSIBLE CAUSES
REPAIR MECHANICAL CONDITION
TRANSMISSION RANGE SENSOR
BATTERY CIRCUIT RESISTANCE TOO HIGH
IGNITION SWITCH OUTPUT CIRCUIT OPEN
STARTER RELAY CONTROL CIRCUIT OPEN
STARTER RELAY OUTPUT CIRCUIT OPEN
FUSED B(+) CIRCUIT OPEN
FUSED IGNITION SWITCH OUTPUT (START) CIRCUIT OPEN
STARTER
STARTER MOTOR RELAY
STARTER RELAY

TEST	ACTION	APPLICABILITY
1	**NOTE: Check all PCM powers and grounds before continuing.** **NOTE: Ensure that SKIS is operating properly. Check the SKIM for DTC. If a SKIM DTC(s) is present diagnose them first before continuing.** **WARNING: MAKE SURE THE BATTERY IS DISCONNECTED, THEN WAIT TWO MINUTES BEFORE PROCEEDING.** Turn the engine over by hand to ensure the engine is not seized. Is the engine able to turn over? Yes → Go To 2 No → Repair the mechanical condition preventing the starter motor from cranking. Perform POWERTRAIN VERIFICATION TEST VER - 1.	All
2	Turn the ignition off. Disconnect the PCM harness connectors. Move the Gear selector through all gear positions, from Park to 1st and back. While moving the gear selector through each gear, measure the resistance between ground and the P/N Position Switch Sense circuit. Did the resistance change from above 10.0 ohms to below 10.0 ohms? Yes → Go To 3 No → Replace the Transmission Range Sensor. Perform POWERTRAIN VERIFICATION TEST VER - 1.	All
3	Turn the ignition off. Check the Battery Cables for high resistance using the service information procedure. Did either Battery Cable have a voltage drop greater than 0.2 volt? Yes → Repair the Battery circuit for high resistance. Perform POWERTRAIN VERIFICATION TEST VER - 1. No → Go To 4	All

*NO CRANK CONDITION — Continued

TEST	ACTION	APPLICABILITY
4	Turn the ignition off. Disconnect the PCM harness connector. **CAUTION: DO NOT PROBE THE PCM HARNESS CONNECTORS. PROBING THE PCM HARNESS CONNECTORS WILL DAMAGE THE PCM TERMINALS RESULTING IN POOR TERMINAL TO PIN CONNECTION. INSTALL MILLER SPECIAL TOOL #8815 TO PERFORM DIAGNOSIS.** Turn the ignition to the Start position. Using a 12-volt test light connected to ground, probe the Fused Ignition Switch Output (Start) circuit in the appropriate terminal of special tool #8815. Does the test light illuminate brightly? Yes → Go To 5 No → Repair the Fused Ignition Switch (Start) circuit for an open or high resistance. Perform POWERTRAIN VERIFICATION TEST VER - 1.	All
5	Turn ignition off. Remove the Starter Relay from PDC. **WARNING: The Parking Brake must be engaged and the transmission must be in Park for a vehicle equipped with an automatic transmission.** **WARNING: The Starter may Engage in the next step. Keep away from moving engine parts.** Briefly connect a jumper wire between Starter Relay B+ circuit and the Starter Relay Output Circuits. Turn the ignition to the crank position. Did the Starter Motor crank the engine? Yes → Go To 6 No → Go To 9	All
6	Turn the ignition off. Remove the Starter Relay from the PDC. Turn the ignition on. Using a 12-volt test light, probe the Ignition Switch Output circuit in the Starter Relay connector. While observing 12-volt test light, hold ignition key in the start position. Does the test light illuminate brightly? Yes → Go To 7 No → Repair the Ignition Switch Output circuit for an open or high resistance. Perform POWERTRAIN VERIFICATION TEST VER - 1.	All
7	Turn the ignition off. Remove the Starter Relay from the PDC. Disconnect the PCM harness connector. Measure the Starter Relay Control circuit between the Relay terminal and the PCM harness connector. Is the resistance below 5.0 ohms? Yes → Go To 8 No → Repair the Starter Relay Control circuit for an open. Perform POWERTRAIN VERIFICATION TEST VER - 1.	All

*NO CRANK CONDITION — Continued

TEST	ACTION	APPLICABILITY
8	Turn the ignition off. Install a substitute a Relay in the of the Starter Motor Relay. Attempt to start the vehicle. Does the engine crank over? Yes → Replace the Starter Motor Relay. Perform POWERTRAIN VERIFICATION TEST VER - 1. No → Replace and program the Powertrain Control Module in accordance with the Service Information. Perform POWERTRAIN VERIFICATION TEST VER - 1.	All
9	Turn ignition off. Remove the Starter Relay from the PDC. Disconnect the Starter Relay Output connector from the Starter Solenoid. Measure the resistance of the Starter Relay Output circuit between the Relay and the Solenoid harness connector. Is the resistance below 5.0 ohms? Yes → Go To 10 No → Repair Starter Relay Output circuit for an open. Perform POWERTRAIN VERIFICATION TEST VER - 1.	All
10	Turn the ignition off. Remove the Starter Relay from the PDC. Using a 12-volt test light connected to ground, probe the Fused B+ circuit at the Starter Relay terminal. Does the test light illuminate brightly? Yes → Go To 11 No → Repair the Fused B(+) Circuit for an open or high resistance. Perform POWERTRAIN VERIFICATION TEST VER - 1.	All
11	If there are no other possible causes remaining, review repair. Repair Replace the Starter. Perform POWERTRAIN VERIFICATION TEST VER - 1.	All

Symptom:

*NO RESPONSE FROM PCM WITH A NO START CONDITION

POSSIBLE CAUSES
PCM FUSED B+ CIRCUIT
PCM FUSED IGNITION SWITCH OUTPUT CIRCUIT
PCM GROUND CIRCUITS
PCM

TEST	ACTION	APPLICABILITY
1	**NOTE: The DRBIII® and cable must be operating properly for the results of this test to be valid.** **NOTE: Ensure the ignition switch was on when trying to communicate with the PCM.** Turn the ignition off. Disconnect the PCM harness connector. Using a 12-volt test light connected to ground, probe the PCM Fused B+ circuit in the PCM harness connector. Does the test light illuminate brightly? Yes → Go To 2 No → Repair the Fused B+ circuit. Perform POWERTRAIN VERIFICATION TEST VER - 1.	All
2	Turn the ignition off. Disconnect the PCM harness connector. Turn the ignition on. Using a 12-volt test light connected to ground, probe the PCM Fused Ignition Switch Output circuit in the PCM harness connector. Does the test light illuminate brightly? Yes → Go To 3 No → Repair the Ignition Switch Output circuit Perform POWERTRAIN VERIFICATION TEST VER - 1.	All
3	Turn the ignition off. Disconnect the PCM harness connector. Using a 12-volt test light connected to battery voltage, probe all the PCM ground circuits in the PCM harness connector. Does the test light illuminate brightly? Yes → Go To 4 No → Repair the PCM ground circuits. Perform POWERTRAIN VERIFICATION TEST VER - 1.	All
4	If there is no possible causes remaining, view repair. Repair Replace and program the Powertrain Control Module in accordance with the Service Information. Perform POWERTRAIN VERIFICATION TEST VER - 1.	All

Symptom:
*START AND STALL CONDITION

POSSIBLE CAUSES
CHECKING DTCS
CHECKING SKIM DTCS
FUEL PRESSURE OUT OF SPECS
TP SENSOR SWEEP
TP SENSOR VOLTAGE GREATER THAN 0.92 VOLTS WITH THROTTLE CLOSED
ECT SENSOR OPERATION
OTHER POSSIBLE CAUSES FOR START & STALL
RESTRICTED FUEL SUPPLY LINE
FUEL PUMP INLET STRAINER PLUGGED
FUEL PUMP MODULE

TEST	ACTION	APPLICABILITY
1	Turn the ignition on. With the DRBIII®, read DTC's. Are any DTCs present? Yes → Refer to the Driveability Category and perform the appropriate symptom. Perform POWERTRAIN VERIFICATION TEST VER - 1. No → Go To 2	All
2	Turn the ignition on. **NOTE: If you are unable to communicate with the SKIM, refer to the Communication Category and perform the appropriate symptom.** With the DRBIII®, read the SKIM codes. Are there any SKIM DTCs? Yes → Refer to the Vehicle Theft category and perform the appropriate symptom. Perform POWERTRAIN VERIFICATION TEST VER - 1. No → Go To 3	All

*START AND STALL CONDITION — Continued

TEST	ACTION	APPLICABILITY
3	Turn the ignition off. **WARNING: The fuel system is under a constant pressure even with the engine off. Before testing or servicing any fuel system hose, fitting or line, the fuel system pressure must be released.** Install a fuel pressure gauge to the fuel rail test port. Turn the ignition on. With the DRBIII®, actuate the ASD Fuel System test and observe the fuel pressure gauge. **NOTE: Fuel pressure specification is 400 KPa +/- 34 KPa (58 psi +/- 5 psi).** Choose a conclusion that best matches your fuel pressure reading. Below Specification Go To 4 Within Specification Go To 6 Above Specification Replace the fuel filter/fuel pressure regulator. Perform POWERTRAIN VERIFICATION TEST VER - 1. **Caution: Stop All Actuations.**	All
4	Turn the ignition off. **WARNING: The fuel system is under a constant pressure even with the engine off. Before testing or servicing any fuel system hose, fitting or line, the fuel system pressure must be released.** Raise vehicle on hoist, and disconnect the fuel pressure line at the fuel pump module. Install special 5/16 fuel line adapter tool #6539 between the disconnected fuel line and the fuel pump module. Attach a fuel pressure test gauge to the ″T″ fitting on tool #6539. Turn the ignition on. With the DRBIII®, actuate the ASD Fuel System test and observe the fuel pressure gauge. **NOTE: Fuel pressure specification is 400 KPa +/- 34 KPa (58 psi +/- 5 psi).** Is the fuel pressure within specification now? Yes → Repair/replace fuel supply line as necessary. Perform POWERTRAIN VERIFICATION TEST VER - 1. No → Go To 5 **Caution: Stop All Actuations.**	All
5	Turn the ignition off. **WARNING: The fuel system is under a constant pressure even with the engine off. Before testing or servicing any fuel system hose,fitting or line, the fuel system pressure must be released.** Remove the Fuel Pump Module and inspect the Fuel Inlet Strainer. Is the Fuel Inlet Strainer plugged? Yes → Replace the Fuel Pump Inlet Strainer. Perform POWERTRAIN VERIFICATION TEST VER - 1. No → Replace the Fuel Pump Module. Perform POWERTRAIN VERIFICATION TEST VER - 1.	All

*START AND STALL CONDITION — Continued

TEST	ACTION	APPLICABILITY
6	Turn the ignition on. With the DRBIII®, read TPS VOLTS. While monitoring the DRBIII®, slowly open and close the Throttle. Is the voltage change smooth? Yes → Go To 7 No → Replace the Throttle Position Sensor. Perform POWERTRAIN VERIFICATION TEST VER - 1.	All
7	Turn the ignition on. With the DRBIII®, read Throttle Position voltage. Throttle must be against stop. Is the voltage 0.92 or less with the Throttle closed? Yes → Go To 8 No → Check for a binding throttle condition. If OK, replace the Throttle Position Sensor. Perform POWERTRAIN VERIFICATION TEST VER - 1.	All
8	**Note: For this test to be valid, the thermostat must be operating correctly.** **Note: This test works best if performed on a cold engine (cold soaked).** **NOTE: If the vehicle was allow to sit over night with no engine start, coolant temperature should be near ambient temperatures.** Turn the ignition on. With the DRBIII®, read the Engine Coolant Temperature value. **Note: If engine coolant temperature is above 82° C (180° F), allow the engine to cool until 65° C (150° F) is reached.** Start the engine. During engine warm-up, monitor the Engine Coolant Temperature value. The temperature value change should be a smooth transition from start up to normal operating temp 82° C (180° F). The value should reach at least 82° C (180° F). Did the Engine Temperature value increase smoothly and did it reach at least 82° C (180° F)? Yes → Go To 9 No → Replace the Engine Coolant Temperature Sensor. Perform POWERTRAIN VERIFICATION TEST VER - 1.	All
9	The following additional items should be checked as a possible cause for a start and stall condition. Refer to any Technical Service Bulletins (TSB's) that may apply to the symptom. Fuel must be free of contamination. The exhaust system must be free of any restrictions. The engine compression must be within specifications. The engine valve timing must be within specifications. The engine must be free from vacuum leaks. The throttle body must be free of carbon buildup and dirt. Do any of the above conditions exist? Yes → Repair as necessary. Perform POWERTRAIN VERIFICATION TEST VER - 1. No → Test Complete.	All

Verification Tests

40/41TE (NGC) TRANSMISSION VERIFICATION TEST - VER 1	APPLICABILITY
1. NOTE: After completion of the Transmission Verification Test, the Powertrain Verification Test must be performed. Refer to the Powertrain Category. 2. Connect the DRBIII® to the Data Link Connector (DLC). 3. Reconnect any disconnected components. 4. With the DRBIII®, erase all Transmission DTC's, also erase the PCM DTC's. 5. Perform *PRNDL FAULT CLEARING PROCEDURE after completion of repairs for P0706 CHECK SHIFTER SIGNAL. 6. With the DRBIII®, display Transmission Temperature. Start and run the engine until the Transmission Temperature is HOT, above 43° C or 110° F. 7. Check the transmission fluid and adjust if necessary. Refer to the Service Information for the Fluid Fill procedure. **8. NOTE: If the Transmission Control Module or Torque Converter has been replaced, or if the Transmission has been repaired or replaced, it is necessary to perform the DRBIII® Quick Learn Procedure and reset the "Pinion Factor".** 9. Road test the vehicle. With the DRBIII®, monitor the engine RPM. Make 15 to 20 1-2, 2-3, 3-4 upshifts. Perform these shifts from a standing start to 45 MPH with a constant throttle opening of 20 to 25 degrees. 10. Below 25 MPH, make 5 to 8 wide open throttle kickdowns to 1st gear. Allow at least 5 seconds each in 2nd and 3rd gear between each kickdown. 11. For a specific DTC, drive the vehicle to the Symptom's When Monitored/When Set conditions to verify the DTC is repaired. 12. If equipped with AutoStick®, upshift and downshift several times using the AutoStick® feature during the road test. **13. NOTE: Use the EATX OBDII task manager to run Good Trip time in each gear, this will confirm the repair and to ensure that the DTC has not re-matured.** 14. Check for Diagnostic Trouble Codes (DTC's) during the road test. If a DTC sets during the road test , return to the Symptom list and perform the appropriate symptom. **15. NOTE: Erase P0700 DTC in the PCM to turn the MIL light off after making transmission repairs.** Were there any Diagnostic Trouble Codes set during the road test? Yes → Repair is not complete, refer to the appropriate symptom. No → Repair is complete.	All

Verification Tests — Continued

BODY VERIFICATION TEST - VER 1	APPLICABILITY
1. Disconnect all jumper wires and reconnect all previously disconnected components and connectors. **2. NOTE: If the SKREEM, PCM/ECM or FCM was replaced, refer to the service information for proper programming procedures.** 3. If the Body Control Module (BCM) was replaced, turn the ignition on for 15 seconds (to allow the new BCM to learn VIN) or engine may not start (if VTSS equipped). If the vehicle is equipped with VTSS, use the DRBIII® and enable VTSS. 4. Program options as necessary. 5. If any HVAC door actuator circuits were repaired, with the DRBIII® in HVAC, System Tests, select Actuator Circuit Test. (Manual Temp Control only). 6. If any actuators were replaced in the HVAC System, with the DRBIII® in HVAC, select System Tests then select HVAC Door Recalibration (Manual Temp Control only). 7. If any actuators were replaced in the ATC System, with the DRBIII® in Automatic Temp Control, select Miscellaneous then select Reset ATC Head. 8. For Three-Zone HVAC Systems, if HVAC Control/Rear Blower Rear Control was replaced/ Rear Blend Pot Circuit Open/Short DTC was set/any rear blend pot circuit was repaired, proceed to Number 9 & 10. 9. With DRBIII® in HVAC, select System Tests then select HVAC Door Recalibration. Door Recalibration must pass before proceeding to next step. 10. With DRBIII® in HVAC, select System Tests then select Reset Rear Blend Switch Span. Rotate Rear Blend/Mode control on Rear Blower Rear Control to full cold. Wait five seconds, then rotate control to full hot. 11. If any repairs were made to the power sliding door or power liftgate, use the DRBIII® and perform the open and close system tests. Observe the instructions on the DRBIII® screen. 12. Ensure that all accessories are turned off and the battery is fully charged. 13. With the DRBIII®, record and erase all DTCs from ALL modules. Start and run the engine for 2 minutes. Operate all functions of the system that caused the original concern. 14. Turn the ignition off and wait 5 seconds. Turn the ignition on and using the DRBIII®, read DTCs from ALL modules. Are any DTC's present or is the original condition still present? Yes → Repair is not complete, refer to the appropriate symptom. No → Repair is complete.	All

POWERTRAIN VERIFICATION TEST VER - 1 - NGC	APPLICABILITY
1. NOTE: After completing the Powertrain Verification Test the Transmission Verification Test must be performed. **2. NOTE: If the PCM has been replaced and the correct VIN and mileage have not been programmed, a DTC will be set in the ABS Module, Airbag Module and the SKIM.** **3. NOTE: If the vehicle is equipped with a Sentry Key Immobilizer System, Secret Key data must be updated. Refer to the Service Information for the PCM, SKIM and the Transponder (ignition key) for programming information.** 4. Inspect the vehicle to ensure that all components related to the repair are connected properly. 5. Inspect the engine oil for fuel contamination. Replace the oil and filter as necessary. 6. Attempt to start the engine. 7. If the No Start condition is still present, refer to the symptom list and perform the diagnostic testing as necessary. refer to and Technical Service Bulletins that may apply. 8. Run the engine for one warm-up cycle to verify operation. 9. With the DRBIII®, confirm that no DTCs or Secondary Indicators are present and that all components are functioning properly. 10. If a DTC is present, refer to the appropriate category and select the corresponding symptom. Are any DTCs present? Yes → Repair is not complete, refer to appropriate symptom. No → Repair is complete.	All

Verification Tests — Continued

POWERTRAIN VERIFICATION TEST VER - 2 - NGC	APPLICABILITY
1. NOTE: After completing the Powertrain Verification Test the Transmission Verification Test must be performed. **2. NOTE: If the PCM has been replaced and the correct VIN and mileage have not been programmed, a DTC will be set in the ABS Module, Airbag Module and the SKIM.** **3. NOTE: If the vehicle is equipped with a Sentry Key Immobilizer System, Secret Key data must be updated. Refer to the Service Information for the PCM, SKIM and the Transponder (ignition key) for programming information.** 4. Inspect the vehicle to ensure that all components related to the repair are connected properly. 5. With the DRBIII®, clear DTCs and Reset Memory all engine values. 6. Run the engine for one warm-up cycle to verify proper operation. 7. Road test the vehicle. Use all accessories that may be related to this repair. 8. With the DRBIII®, confirm that no DTC's or Secondary Indicators are present and that all components are functioning properly. 9. If this test is being performed after a No Trouble Code test, verify the symptom is no longer present. 10. If the symptom is still present, or any other symptom or DTC is present refer to the appropriate category and perform the corresponding symptom. 11. Refer to any Technical Service Bulletins that may apply. 12. If there are no DTCs present and all components are functional properly, the repair is complete. Are any DTCs present? Yes → Repair is not complete, refer to appropriate symptom. No → Repair is complete.	All

POWERTRAIN VERIFICATION TEST VER - 3 - NGC	APPLICABILITY
1. NOTE: After completing the Powertrain Verification Test the Transmission Verification Test must be performed. **2. NOTE: If the PCM has been replaced and the correct VIN and mileage have not been programmed, a DTC will be set in the ABS Module, Airbag Module and the SKIM.** **3. NOTE: If the vehicle is equipped with a Sentry Key Immobilizer System, Secret Key data must be updated. Refer to the Service Information for the PCM, SKIM and the Transponder (ignition key) for programming information.** 4. Inspect the vehicle to ensure that all components related to the repair are connected properly. 5. With the DRBIII®, clear DTCs. 6. Perform generator output test. Refer to the appropriate service information as necessary. 7. Start the engine and set engine speed to 2000 RPM for at least thirty seconds. 8. Cycle the ignition key off and on. 9. With the DRBIII®, read the DTCs. If the DTC returns, or any other symptom or DTC is present, refer to the appropriate category and perform the corresponding symptom. 10. If there are no DTCs present and all components are functioning properly, the repair is complete. Are any DTCs present? Yes → Repair is not complete, refer to appropriate symptom. No → Repair is complete.	All

Verification Tests — Continued

POWERTRAIN VERIFICATION TEST VER - 4 - NGC	APPLICABILITY
1. NOTE: After completing the Powertrain Verification Test the Transmission Verification Test must be performed. **2. NOTE: If the PCM has been replaced and the correct VIN and mileage have not been programmed, a DTC will be set in the ABS Module, Airbag Module and the SKIM.** **3. NOTE: If the vehicle is equipped with a Sentry Key Immobilizer System, Secret Key data must be updated. Refer to the Service Information for the PCM, SKIM and the Transponder (ignition key) for programming information.** 4. Inspect the vehicle to ensure that all engine components are properly installed and connected. 5. Connect the DRBIII® to the data link connector and erase all codes. 6. Turn the speed control ON (if equipped, cruise light will be on). 7. Press and release the SET Switch. If the speed control did not engage, the repair is not complete. Check for TSBs that pertain to speed control problem and then, if necessary, return to Symptom List. 8. Press and hold the RESUME/ACCEL Switch. If the vehicle speed did not increase by at least 2 mph, the repair is not complete. Check for TSBs that pertain to speed control problem and then, if necessary, return to Symptom List. 9. Press and hold the COAST switch. The vehicle speed should decrease. If it did not decrease, the repair is not complete. Check for TSBs that pertain to speed control problem and then, if necessary, return to Symptom List. 10. Using caution, press and release the brake pedal. If the speed control did not disengage, the repair is not complete. Check for TSBs that pertain to speed control problem and then, if necessary, return to Symptom List. 11. Bring the vehicle speed back up to 35 MPH. 12. Press the RESUME/ACCEL switch. If the speed control did not resume the previously set speed, the repair is not complete. Check for TSBs that pertain to speed control problem and then, if necessary, return to Symptom List. 13. Hold down the SET switch. If the vehicle did not decelerate, the repair is not complete. Check for TSBs that pertain to speed control problem and then, if necessary, return to Symptom List. 14. Ensure vehicle speed is greater than 35 mph and release the SET Switch. If vehicle did not adjust and set a new vehicle speed, the repair is not complete. Check for TSBs that pertain to speed control problem and then, if necessary, return to Symptom List. 15. Press and release the CANCEL switch. If the speed control did not disengage, the repair is not complete. Check for TSBs that pertain to speed control problem and then, if necessary, return to Symptom List. 16. Bring the vehicle speed back up above 35 mph and engage speed control. 17. Turn the Speed Control Off. (Cruise light will be off). If the speed control did not disengage, the repair is not complete. Check for TSBs that pertain to speed control problem and then, if necessary, return to Symptom List. 18. If the vehicle successfully passed all of the previous tests, the speed control system is now functioning as designed. The repair is now complete. Did the Speed Control pass the above test? Yes → Repair is complete. No → Repair is not complete, refer to appropriate symptom.	All

Verification Tests — Continued

POWERTRAIN VERIFICATION TEST VER - 5 - NGC	APPLICABILITY
1. NOTE: After completing the Powertrain Verification Test the Transmission Verification Test must be performed. **2. NOTE: If the PCM has been replaced and the correct VIN and mileage have not been programmed, a DTC will be set in the ABS Module, Airbag Module and the SKIM.** **3. NOTE: If the vehicle is equipped with a Sentry Key Immobilizer System, Secret Key data must be updated. Refer to the Service Information for the PCM, SKIM and the Transponder (ignition key) for programming information.** **4. NOTE: When replacing an O2 Sensor, the PCM RAM memory must be cleared, either by disconnecting the PCM C-1 connector or momentarily disconnecting the battery negative terminal.** 5. The NGC (PCM) learns the characteristics of each O2 heater element and these old values should be cleared when installing a new O2 sensor. The customer may experience driveability issues if this is not performed. 6. Inspect the vehicle to ensure that all engine components are properly installed and connected. Reassemble and reconnect components as necessary. 7. Connect the DRBIII® to the data link connector. 8. Ensure the fuel tank has at least a quarter tank of fuel. Turn off all accessories. 9. If a Comprehensive Component DTC was repaired, perform steps 5 - 8. If a Major OBDII Monitor DTC was repaired skip those steps and continue verification. 10. After the ignition has been off for at least 10 seconds, restart the vehicle and run 2 minutes. 11. If the Good Trip counter changed to one or more and there are no new DTC's, the repair was successful and is now complete. Erase DTC's and disconnect the DRBIII®. 12. If the repaired DTC has reset, the repair is not complete. Check for any related TSB's or flash updates and return to the Symptom list. 13. If another DTC has set, return to the Symptom List and follow the path specified for that DTC. 14. With the DRBIII®, monitor the appropriate pre-test enabling conditions until all conditions have been met. Once the conditions have been met, switch screen to the appropriate OBDII monitor, (Audible beeps when the monitor is running). 15. If the monitor ran, and the Good Trip counter changed to one or more, the repair was successful and is now complete. Erase DTC's and disconnect the DRBIII®. 16. If the repaired OBDII trouble code has reset or was seen in the monitor while on the road test, the repair is not complete. Check for any related technical service bulletins or flash updates and return to Symptom List. 17. If another DTC has set, return to the Symptom List and follow the path specified for that DTC. Are any DTCs present? Yes → Repair is not complete, refer to appropriate symptom. No → Repair is complete.	All

Verification Tests — Continued

POWERTRAIN VERIFICATION TEST VER - 6 - NGC	APPLICABILITY
1. Install the Miller Tool #8404 Evaporative Emission Leak Detector (EELD). according to the instructions in the pervious DTC table. 2. Set the smoke/air control switch to AIR. 3. Insert the tester's AIR supply tip (clear hose) into the appropriate calibration orifice on the tester's control panel (based on DTC leak size). 4. Press the remote smoke/air start button. 5. Position the red flag on the air flow meter so it is aligned with the indicator ball. 6. When the calibration is complete, release the remote button. The EELD is now calibrated the flow meter in liters per minute to the size leak indicated by the DTC set in the PCM. 7. Install the service port adapter #8404-14 on the vehicle's service port. 8. Connect the Air supply hose from the EELD to the service port. 9. Press the remote button to activate AIR flow. **10. NOTE: Larger volume fuel tanks, lower fuel levels or if the vehicle is equipped with a Flow Management Valve may indicate high flow and will require 4 to 5 minutes to fill.** 11. Compare the flow meter indicator ball reading to the red flag. 12. ABOVE the red flag indicates a leak present. 13. BELOW the red flag indicates a sealed system. 14. If the indicator ball shows a leak present, perform the smoke test indicated in the previous test and identify the leak and repair. Perform this verification test when the repair is complete. Did the indicator ball indicate the a leak is present?? Yes → Repeat the DTC test to identify the leak and repair. No → Repair is complete.	All

SKREEM VERIFICATION TEST - VER 1A	APPLICABILITY
1. Reconnect all previously disconnected components and connectors. 2. Obtain the vehicle's unique Personal Identification Number (PIN) assigned to it's original SKREEM. This number can be obtained from the vehicle's invoice or Chrysler's Customer Center (1-800-992-1997). **3. NOTE: When entering the PIN, care should be taken because the SKREEM will only allow 3 consecutive attempts to enter the correct PIN. If 3 consecutive incorrect PIN's are entered the SKREEM will Lock Out the DRB III for 1 hour.** 4. To exit Lock Out mode, the ignition key must remain in the Run position continually for 1 hour. Turn off all accessories and connect a battery charger if necessary. 5. With the DRB III, select Theft Alarm, SKREEM and Miscellaneous. Then select desired procedure and follow the steps that will be displayed. 6. If the SKREEM has been replaced, ensure all of the vehicle ignition keys are programmed to the new SKREEM. **7. NOTE: Prior to returning vehicle to the costumer, perform a module scan to be sure that all DTC's are erased. Erase any DTC's that are found.** 8. With the DRB III erase all DTC's. Perform 5 ignition key cycles leaving the key on for at least 90 seconds per cycle. 9. With the DRB III, read the SKREEM DTC's. Are there any SKREEM DTC's? Yes → Repair is not complete, refer to appropriate symptom. No → Repair is complete.	All

8.0 COMPONENT LOCATIONS

8.1 CONTROL MODULES AND FUSE & RELAY CENTER

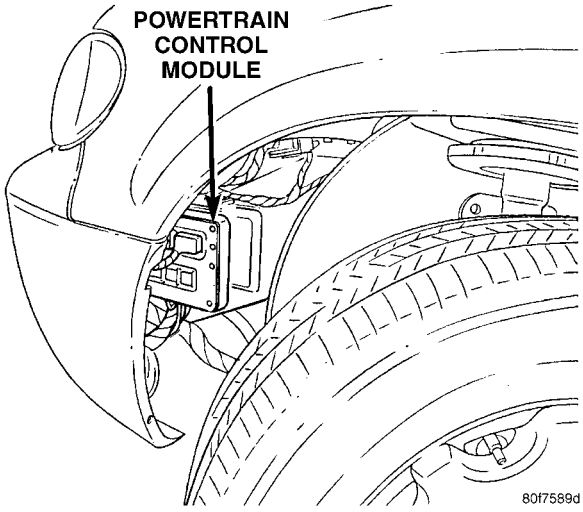

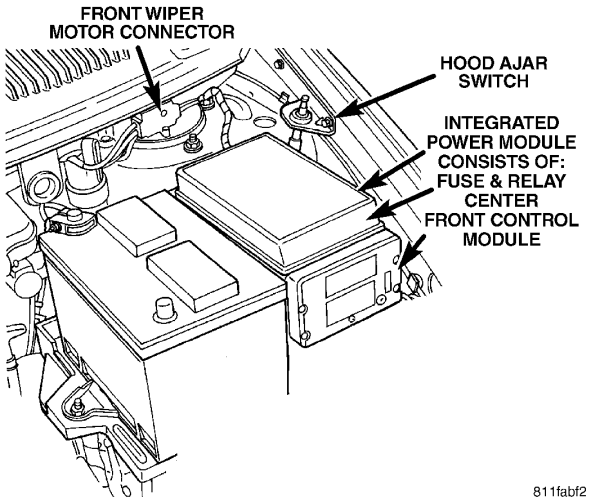

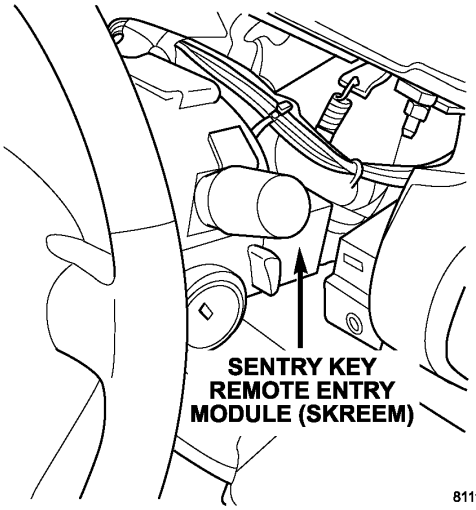

8.2 CONTROLS AND SOLENOID

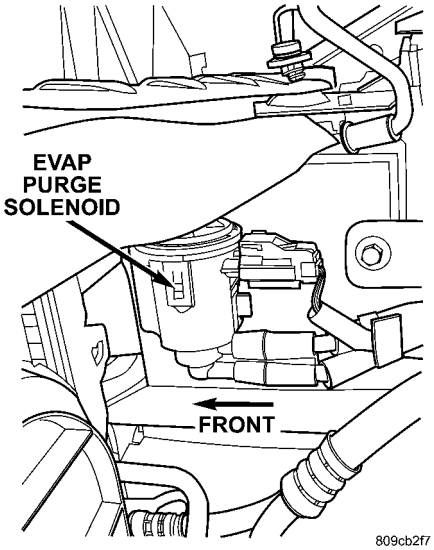

2.4L

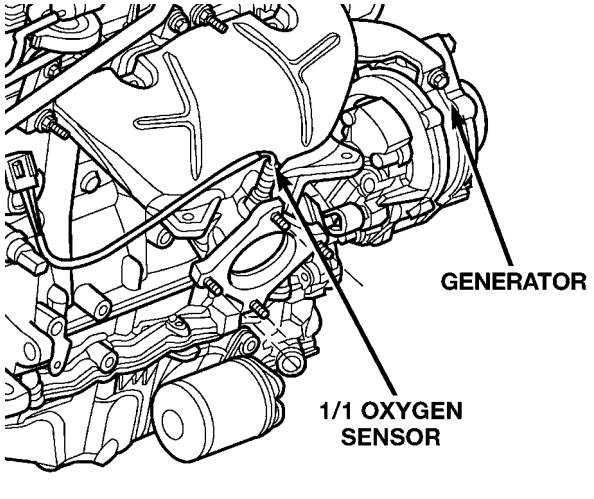

8.2 CONTROLS AND SOLENOID (Continued)

3.3L/3.8L

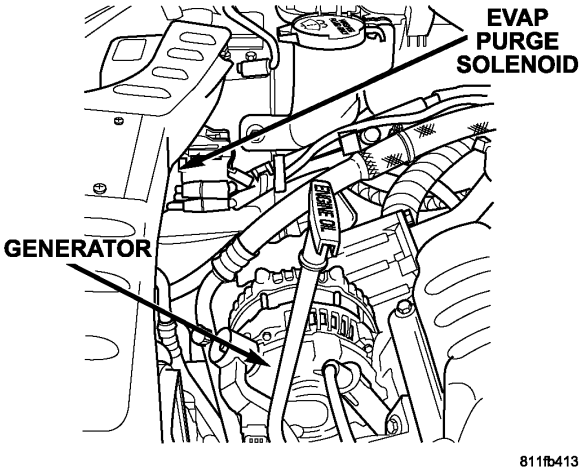

2.4L

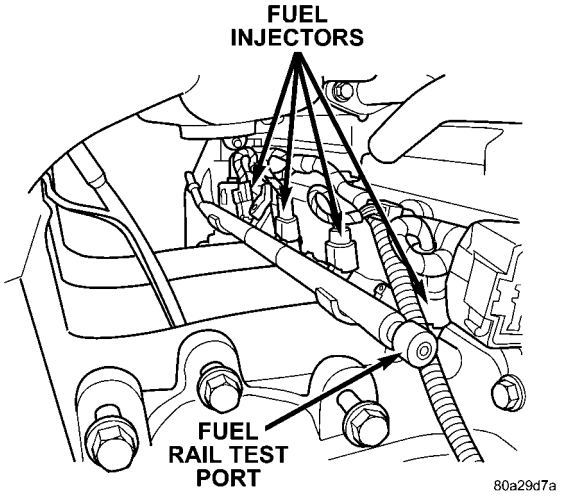

3.3L/3.8L

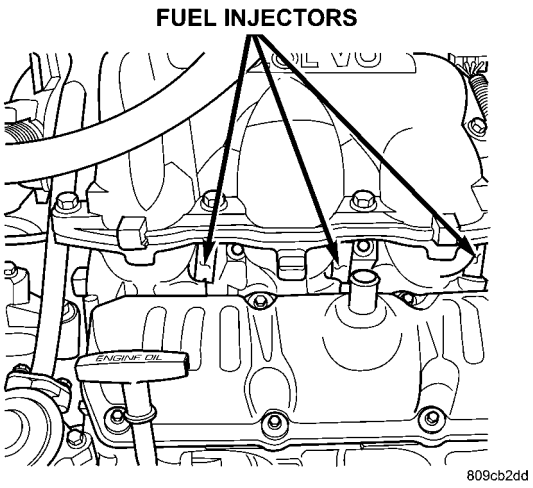

2.4L

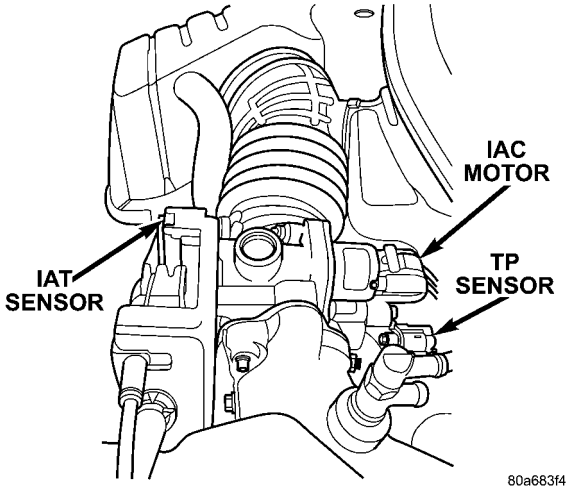

3.3L/3.8L

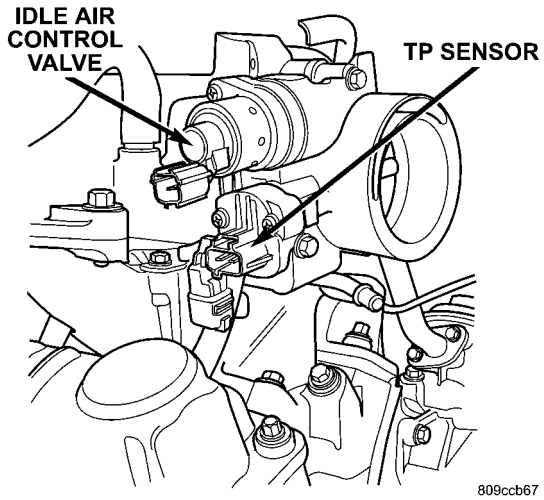

2.4L

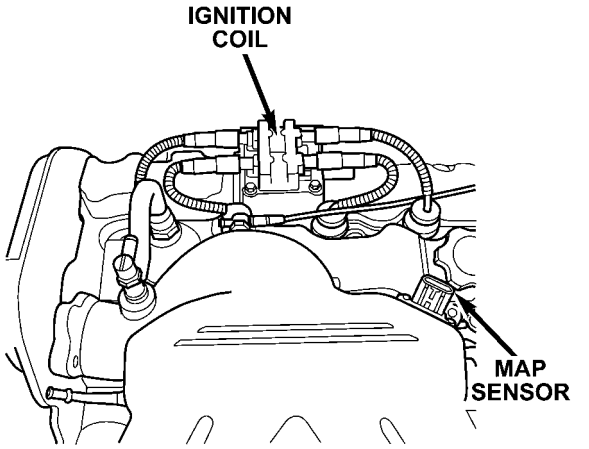

80a2a2be

3.3L/3.8L

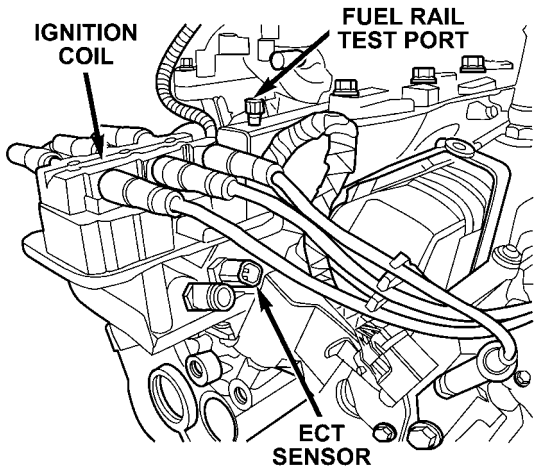

809cb254

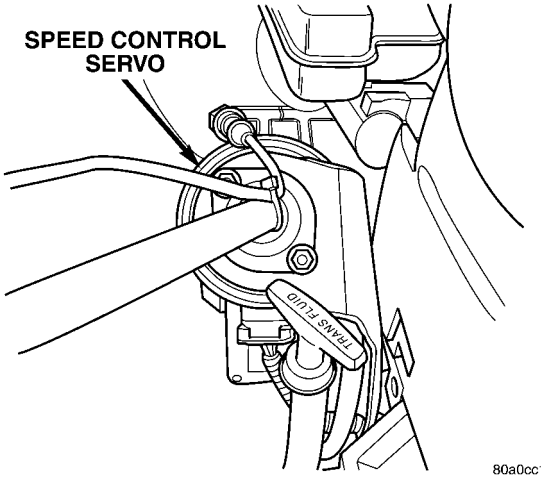

80a0cc16

8.3 DATA LINK CONNECTOR

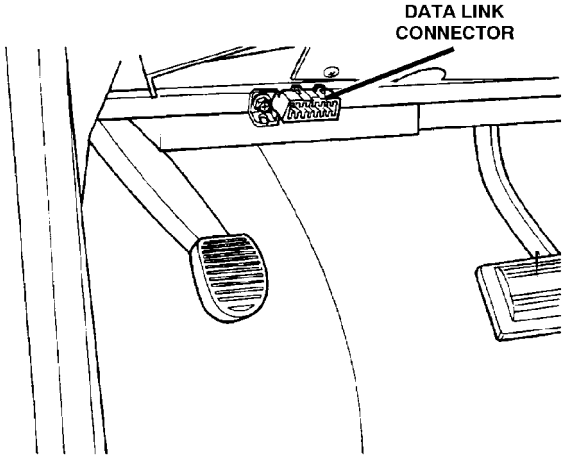

3310206

8.4 SENSORS

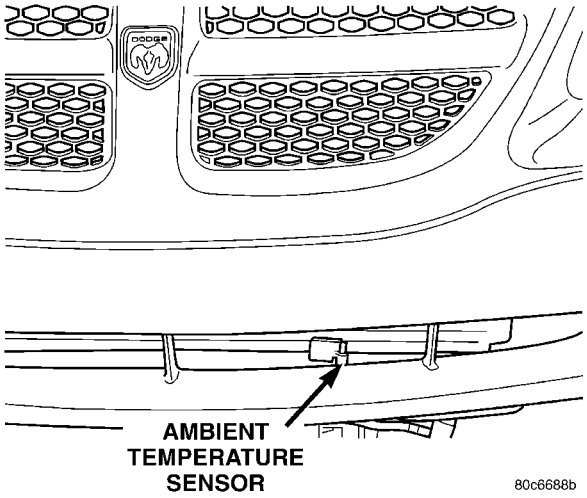

2.4L

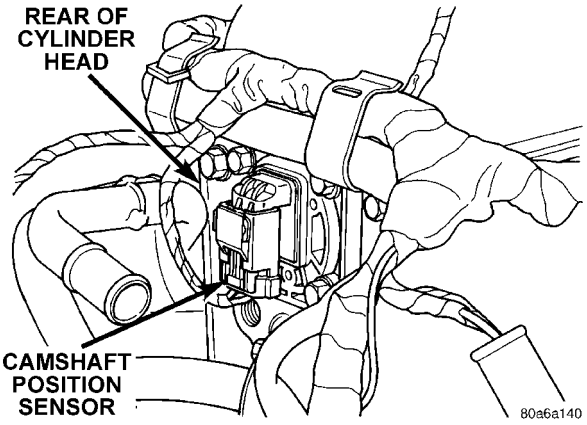

3.3L/3.8L

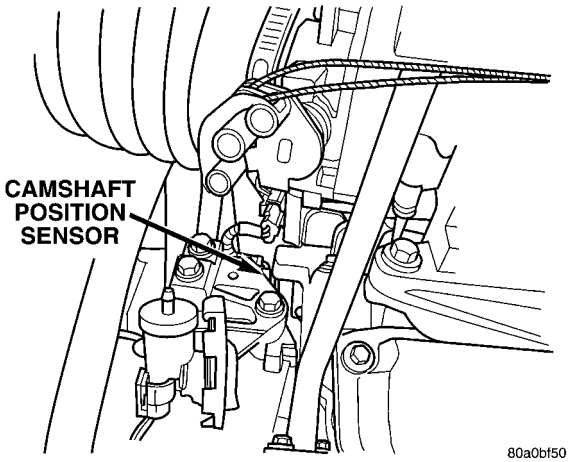

2.4L

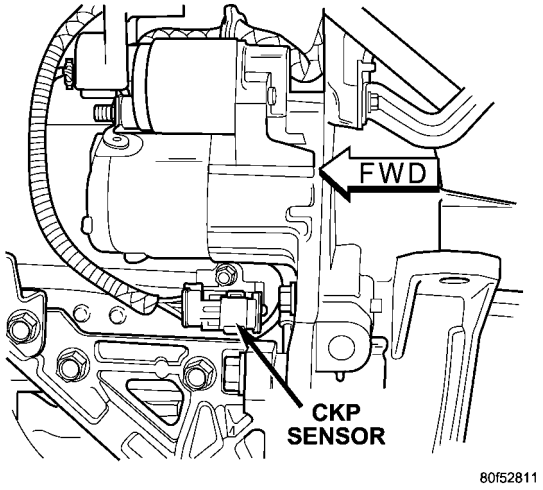

3.3L/3.8L

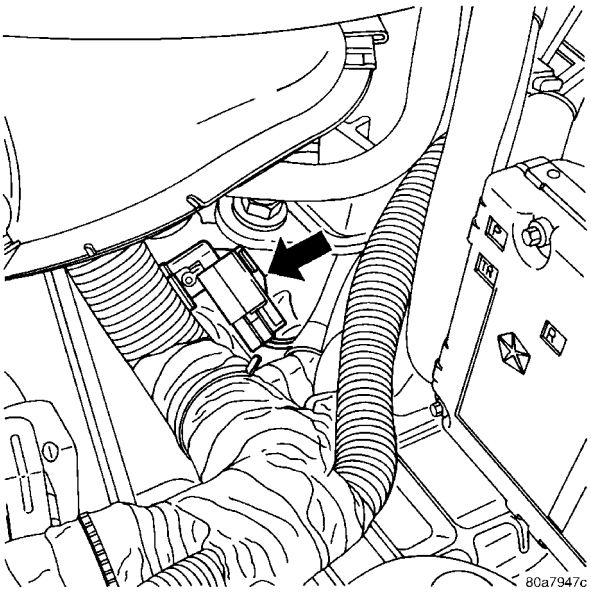

2.4L

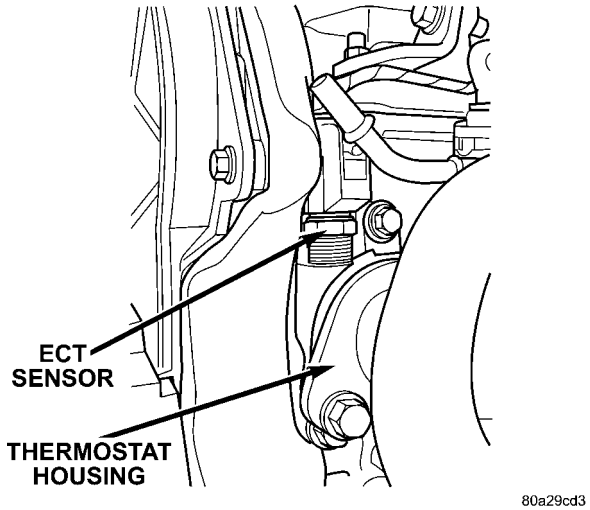

3.3L/3.8L

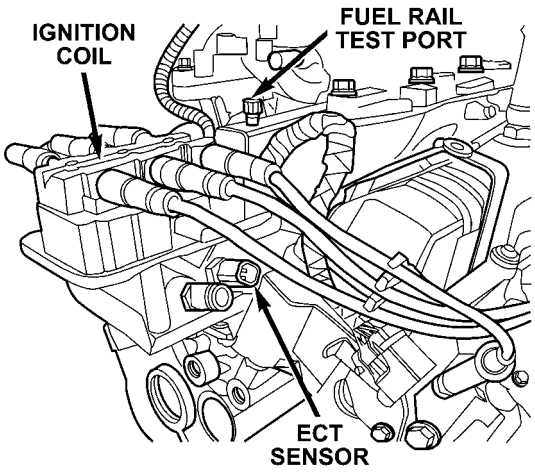

809cb254

2.4L

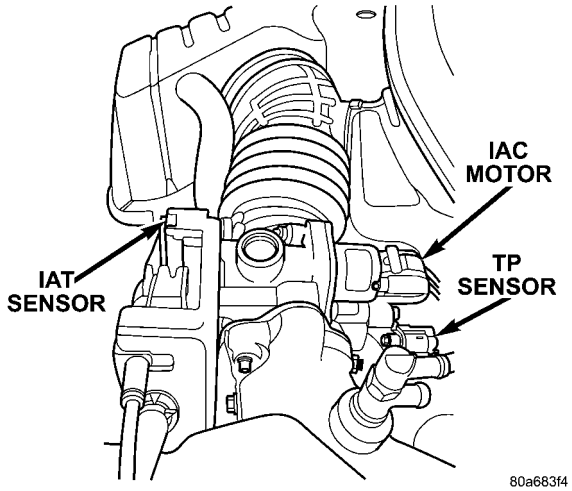

80a683f4

3.3L/3.8L

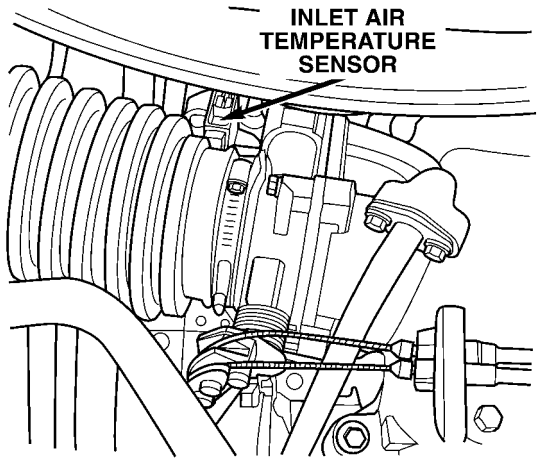

80a0c227

2.4L

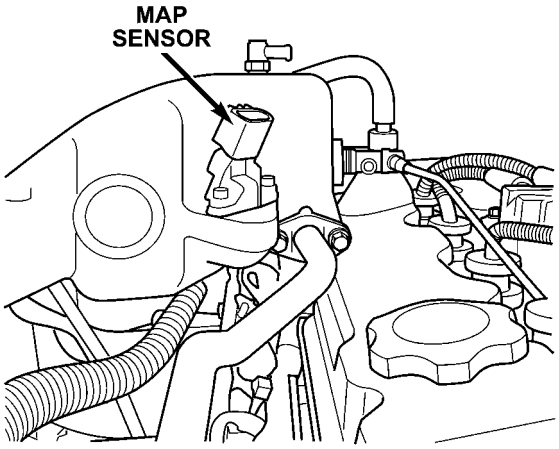

80a29c05

3.3L/3.8L

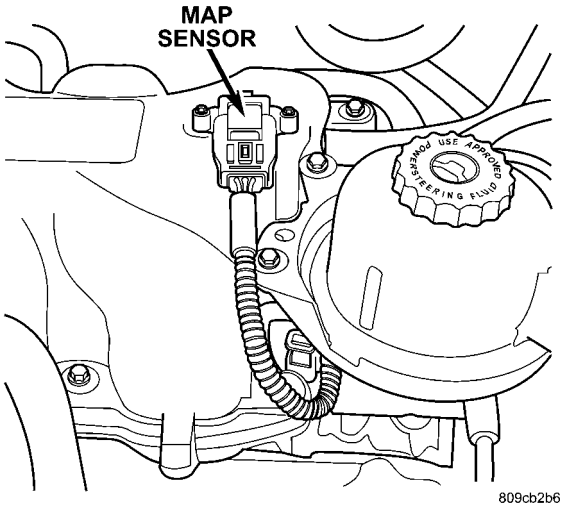

809cb2b6

2.4L

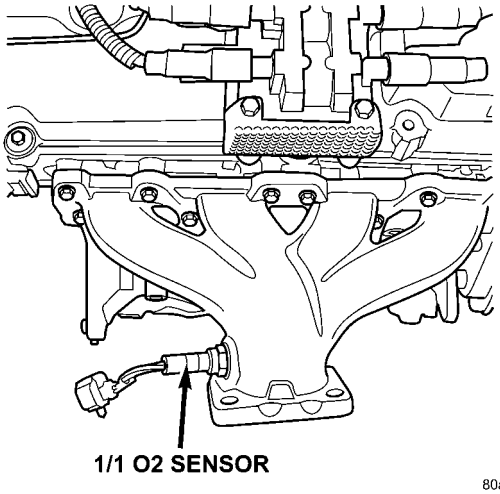

80a29d36

8.4 SENSORS (Continued)

3.3L/3.8L

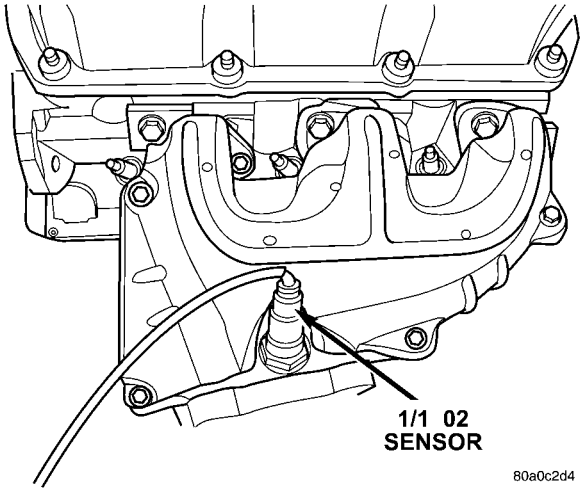

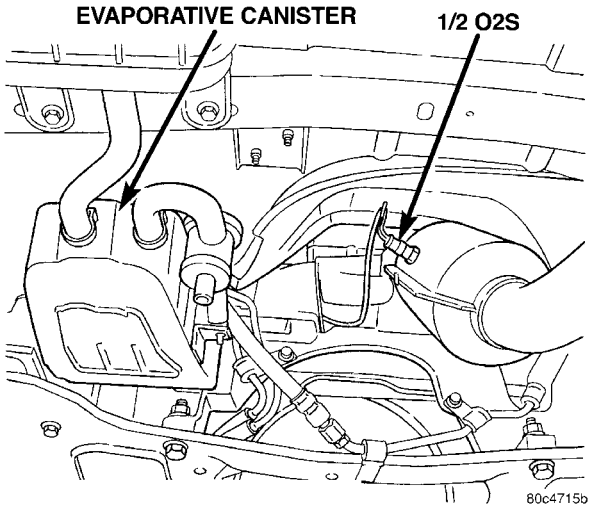

2.4L

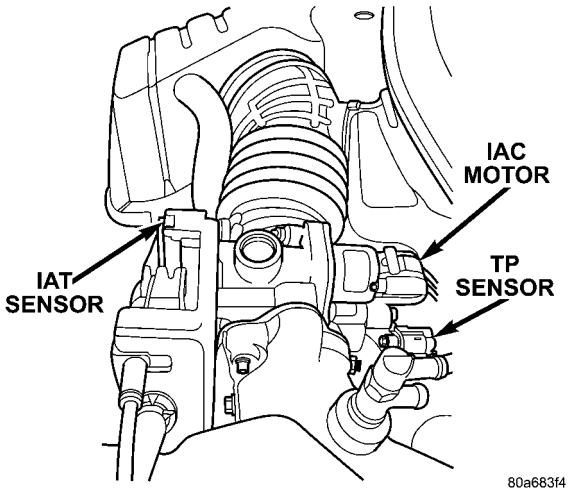

3.3L/3.8L

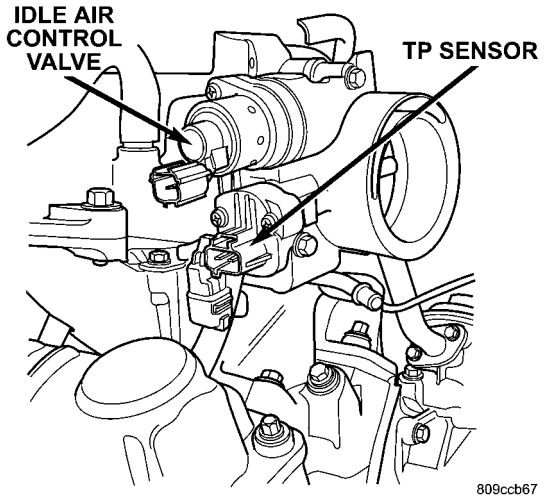

8.5 FUEL SYSTEM

2.4L

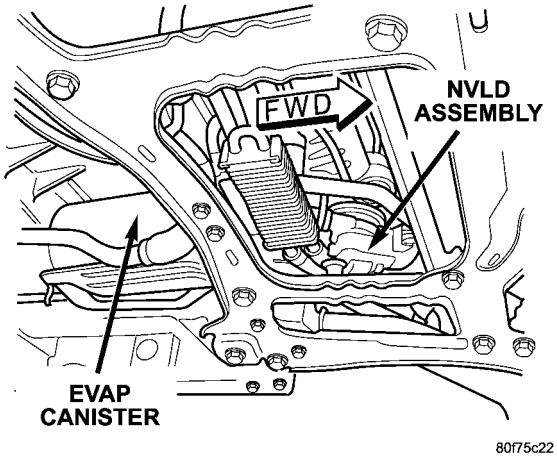

3.3L/3.8L

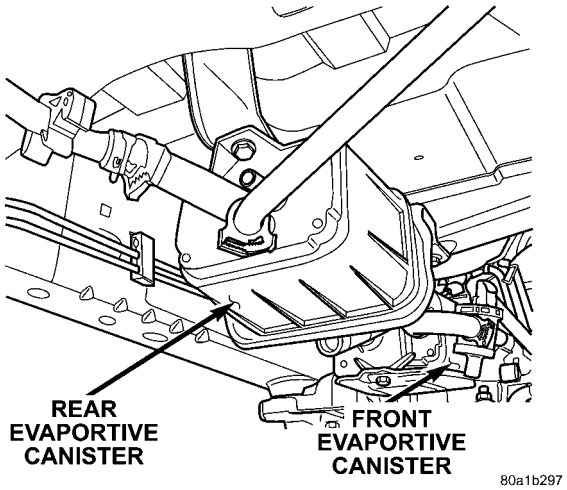

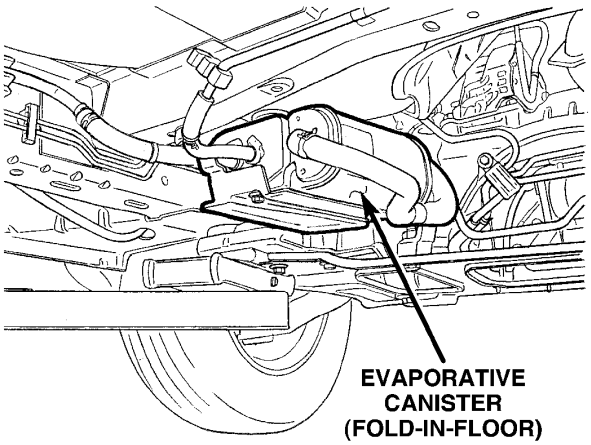

8133b6d8

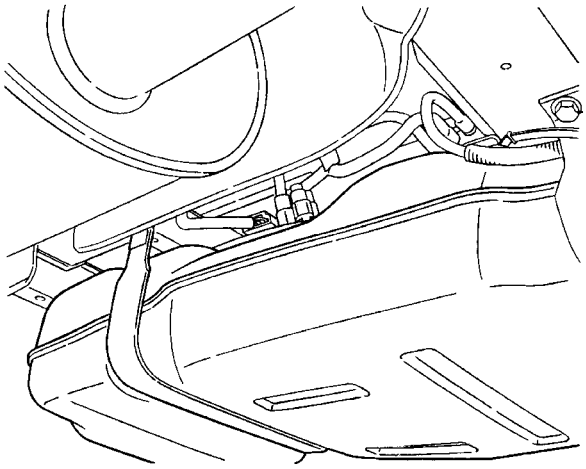

80c472ca

8.6 SWITCHES

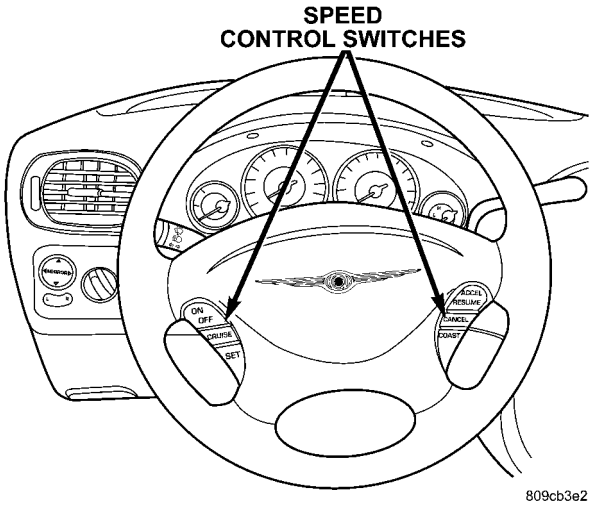

809cb3e2

NOTES

9.0 CONNECTOR PINOUTS

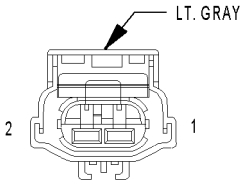

A/C COMPRESSOR CLUTCH

A/C COMPRESSOR CLUTCH - LT. GRAY 2 WAY

CAV	CIRCUIT	FUNCTION
1	C3 20DB/YL (DIESEL)	A/C COMPRESSOR CLUTCH RELAY OUTPUT
1	C3 20DB/YL (GAS)	A/C CLUTCH RELAY OUTPUT
2	Z153 18BK/GY	GROUND

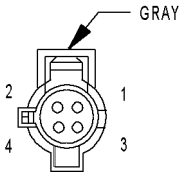

A/C PRESSURE SENSOR

A/C PRESSURE SENSOR - GRAY 4 WAY

CAV	CIRCUIT	FUNCTION
1	C918 20BK/LB (DIESEL)	A/C PRESSURE SENSOR GROUND
1	K900 18DB/DG (GAS)	SENSOR GROUND
2	F855 20PK/YL (2.4L)	5 VOLT SUPPLY
2	F855 18PK/YL (3.3L/3.8L)	5 VOLT SUPPLY
2	F851 20LB/PK (DIESEL)	SENSOR REFERENCE VOLTAGE B
3	C18 20LB/BR (DIESEL)	A/C PRESSURE SENSOR SIGNAL
3	C18 18LB/BR (GAS)	A/C PRESSURE SIGNAL
4	-	-

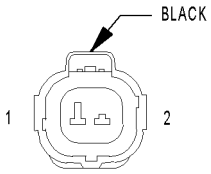

AMBIENT TEMPERATURE SENSOR

AMBIENT TEMPERATURE SENSOR - BLACK 2 WAY

CAV	CIRCUIT	FUNCTION
1	G31 18VT/LG (DIESEL)	AMBIENT TEMPERATURE SENSOR SIGNAL
1	G31 18VT/LG (GAS)	AAT SIGNAL
2	G931 18VT/BR (DIESEL)	AMBIENT TEMPERATURE SENSOR RETURN
2	K900 18DB/DG (GAS)	SENSOR GROUND

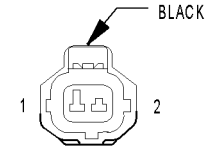

BATTERY TEMPERATURE SENSOR

BATTERY TEMPERATURE SENSOR - BLACK 2 WAY

CAV	CIRCUIT	FUNCTION
1	K25 20BR/TN (DIESEL)	BATTERY TEMPERATURE SENSOR SIGNAL
1	K91 18DB/YL (GAS)	BATTERY TEMP SIGNAL
2	K900 20DB/DG (DIESEL)	SENSOR GROUND
2	K900 18DB/DG (GAS)	SENSOR GROUND

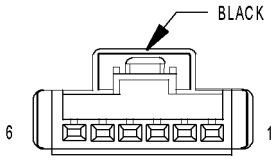

BRAKE LAMP SWITCH

BRAKE LAMP SWITCH - BLACK 6 WAY

CAV	CIRCUIT	FUNCTION
1	A103 18GY/RD	FUSED B(+)
2	L50 18WT/TN (DIESEL)	PRIMARY BRAKE SWITCH SIGNAL
2	L50 18WT/TN (GAS)	BRAKE LAMP SWITCH OUTPUT
3	V30 20VT/WT (GAS)	S/C BRAKE SWITCH OUTPUT
4	V32 20VT/YL (GAS)	SPEED CONTROL SUPPLY
5	Z429 20BK/OR	GROUND
6	B29 20DG/WT	SECONDARY BRAKE SWITCH SIGNAL

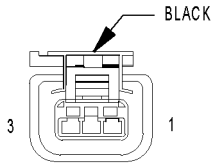

CAMSHAFT POSITION SENSOR (GAS)

CAMSHAFT POSITION SENSOR (GAS) - BLACK 3 WAY

CAV	CIRCUIT	FUNCTION
1	F855 20PK/YL (2.4L)	5 VOLT SUPPLY
1	F855 18PK/YL (3.3L/3.8L)	5 VOLT SUPPLY
2	K900 20DB/DG	SENSOR GROUND
3	K44 18DB/GY	CMP SIGNAL

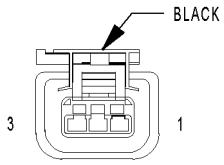

CRANKSHAFT POSITION SENSOR (GAS)

CRANKSHAFT POSITION SENSOR (GAS) - BLACK 3 WAY

CAV	CIRCUIT	FUNCTION
1	F855 20PK/YL (2.4L)	5 VOLT SUPPLY
1	F855 18PK/YL (3.3L/3.8L)	5 VOLT SUPPLY
2	K900 20DB/DG	SENSOR GROUND
3	K24 18BR/LB	CKP SIGNAL

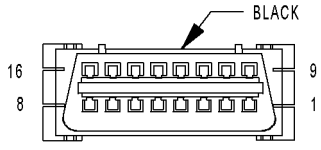

DATA LINK CONNECTOR

DATA LINK CONNECTOR - BLACK 16 WAY

CAV	CIRCUIT	FUNCTION
1	-	-
2	D25 20WT/VT	PCI BUS
3	-	-
4	Z11 20BK/LG	GROUND
5	Z111 20BK/WT	GROUND
6	-	-
7	D21 20WT/DG (DIESEL)	SCI TRANSMIT (ECM)
7	D21 20WT/DG (GAS)	SCI TRANSMIT (PCM)
8	-	-
9	D123 20WT/BR	FLASH PROGRAM ENABLE
10	-	-
11	-	-
12	D20 20WT/LG (GAS)	SCI RECEIVE (PCM)
13	-	-
14	-	-
15	D15 20DG/YL (EATX)	SCI TRANSMIT (TCM)
16	A105 20DB/RD	FUSED B(+)

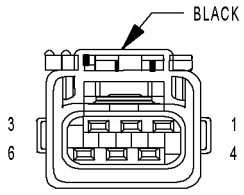

EGR SOLENOID (3.3L)

EGR SOLENOID (3.3L) - BLACK 6 WAY

CAV	CIRCUIT	FUNCTION
1	K34 18DB/LG	EGR SOLENOID SIGNAL
2	F855 18PK/YL	5 VOLT SUPPLY
3	K900 18DB/DG	SENSOR GROUND
4	Z335 18BK/DB	GROUND
5	-	-
6	K35 18DB/VT	EGR SOLENOID CONTROL

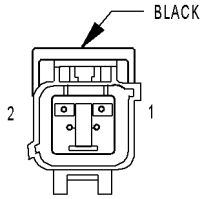

ENGINE COOLANT TEMP SENSOR (GAS)

ENGINE COOLANT TEMP SENSOR (GAS) - BLACK 2 WAY

CAV	CIRCUIT	FUNCTION
1	K900 20DB/DG	SENSOR GROUND
2	K2 18VT/OR	ECT SIGNAL

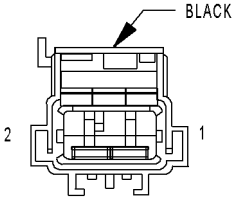

EVAP/PURGE SOLENOID (GAS)

EVAP/PURGE SOLENOID (GAS) - BLACK 2 WAY

CAV	CIRCUIT	FUNCTION
1	K52 18DB/WT	EVAP PURGE CONTROL
2	K70 18DB/BR	EVAP PURGE RETURN

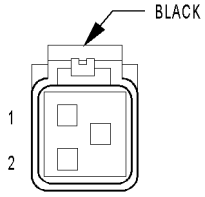

FUEL INJECTOR NO. 1 (2.4L/3.3L/3.8L)

FUEL INJECTOR NO. 1 (2.4L/3.3L/3.8L) - BLACK 2 WAY

CAV	CIRCUIT	FUNCTION
1	K342 16BR/WT	ASD RELAY OUTPUT
2	K11 16BR/YL	INJECTOR CONTROL NO. 1

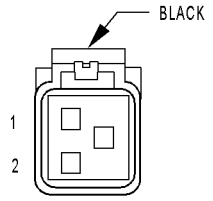

FUEL INJECTOR NO. 2 (2.4L/3.3L/3.8L)

FUEL INJECTOR NO. 2 (2.4L/3.3L/3.8L) - BLACK 2 WAY

CAV	CIRCUIT	FUNCTION
1	K342 16BR/WT	ASD RELAY OUTPUT
2	K12 16BR/DB	INJECTOR CONTROL NO. 2

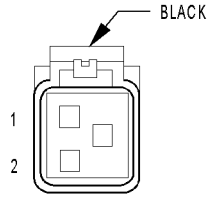

FUEL INJECTOR NO. 3 (2.4L/3.3L/3.8L)

FUEL INJECTOR NO. 3 (2.4L/3.3L/3.8L) - BLACK 2 WAY

CAV	CIRCUIT	FUNCTION
1	K342 16BR/WT	ASD RELAY OUTPUT
2	K13 16BR/LB	INJECTOR CONTROL NO. 3

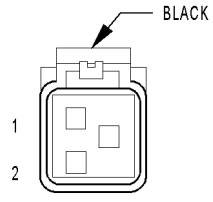

FUEL INJECTOR NO. 4 (2.4L/3.3L/3.8L)

FUEL INJECTOR NO. 4 (2.4L/3.3L/3.8L) - BLACK 2 WAY

CAV	CIRCUIT	FUNCTION
1	K342 16BR/WT	ASD RELAY OUTPUT
2	K14 16BR/TN	INJECTOR CONTROL NO. 4

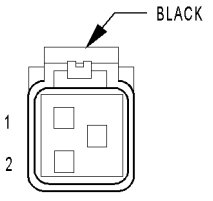

FUEL INJECTOR NO. 5 (3.3L/3.8L)

FUEL INJECTOR NO. 5 (3.3L/3.8L) - BLACK 2 WAY

CAV	CIRCUIT	FUNCTION
1	K342 16BR/WT	ASD RELAY OUTPUT
2	K38 16BR/OR	INJECTOR CONTROL NO. 5

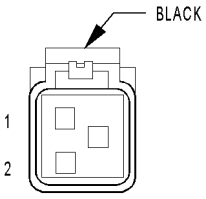

FUEL INJECTOR NO. 6 (3.3L/3.8L)

FUEL INJECTOR NO. 6 (3.3L/3.8L) - BLACK 2 WAY

CAV	CIRCUIT	FUNCTION
1	K342 16BR/WT	ASD RELAY OUTPUT
2	K58 16BR/VT	INJECTOR CONTROL NO. 6

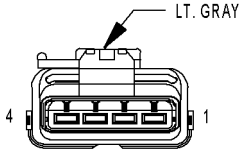

FUEL PUMP MODULE

FUEL PUMP MODULE - LT. GRAY 4 WAY

CAV	CIRCUIT	FUNCTION
1	Z201 18BK/OR (GAS)	GROUND
2	Z201 20BK/OR (DIESEL)	GROUND
2	Z201 20BK/DB (GAS)	GROUND
3	N4 20DB/WT	FUEL LEVEL SENSOR SIGNAL
4	N1 18DB/OR (GAS)	FUEL PUMP RELAY OUTPUT

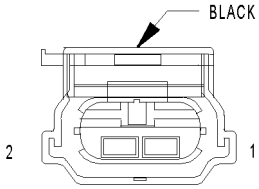

GENERATOR

GENERATOR - BLACK 2 WAY

CAV	CIRCUIT	FUNCTION
1	K342 16BR/WT (DIESEL)	ECM/PCM RELAY OUTPUT
1	Z20 18BK (GAS)	GROUND
2	K20 14BR/GY (DIESEL)	GENERATOR FIELD CONTROL
2	K20 18BR/GY (GAS)	GEN FIELD CONTROL

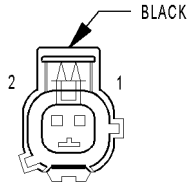

IDLE AIR CONTROL MOTOR (GAS)

IDLE AIR CONTROL MOTOR (GAS) - BLACK 2 WAY

CAV	CIRCUIT	FUNCTION
1	K61 18VT/GY	IAC MOTOR CONTROL
2	K961 18BR/VT	IAC RETURN

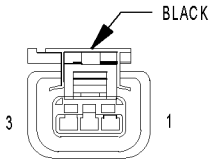

IGNITION COIL (2.4L)

IGNITION COIL (2.4L) - BLACK 3 WAY

CAV	CIRCUIT	FUNCTION
1	K17 16DB/TN	COIL CONTROL NO. 2
2	K342 16BR/WT	ASD RELAY OUTPUT
3	K19 16DB/DG	COIL CONTROL NO. 1

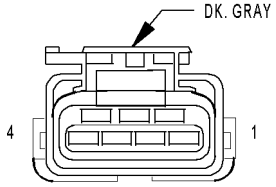

IGNITION COIL (3.3L/3.8L)

IGNITION COIL (3.3L/3.8L) - DK. GRAY 4 WAY

CAV	CIRCUIT	FUNCTION
1	K18 16BR/OR	COIL CONTROL NO. 3
2	K342 16BR/WT	ASD RELAY OUTPUT
3	K19 16DB/DG	COIL CONTROL NO. 1
4	K17 16DB/TN	COIL CONTROL NO. 2

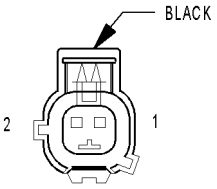

INLET AIR TEMPERATURE SENSOR

INLET AIR TEMPERATURE SENSOR - BLACK 2 WAY

CAV	CIRCUIT	FUNCTION
1	K21 18DB/LG	IAT SIGNAL
2	K900 20DB/DG	SENSOR GROUND

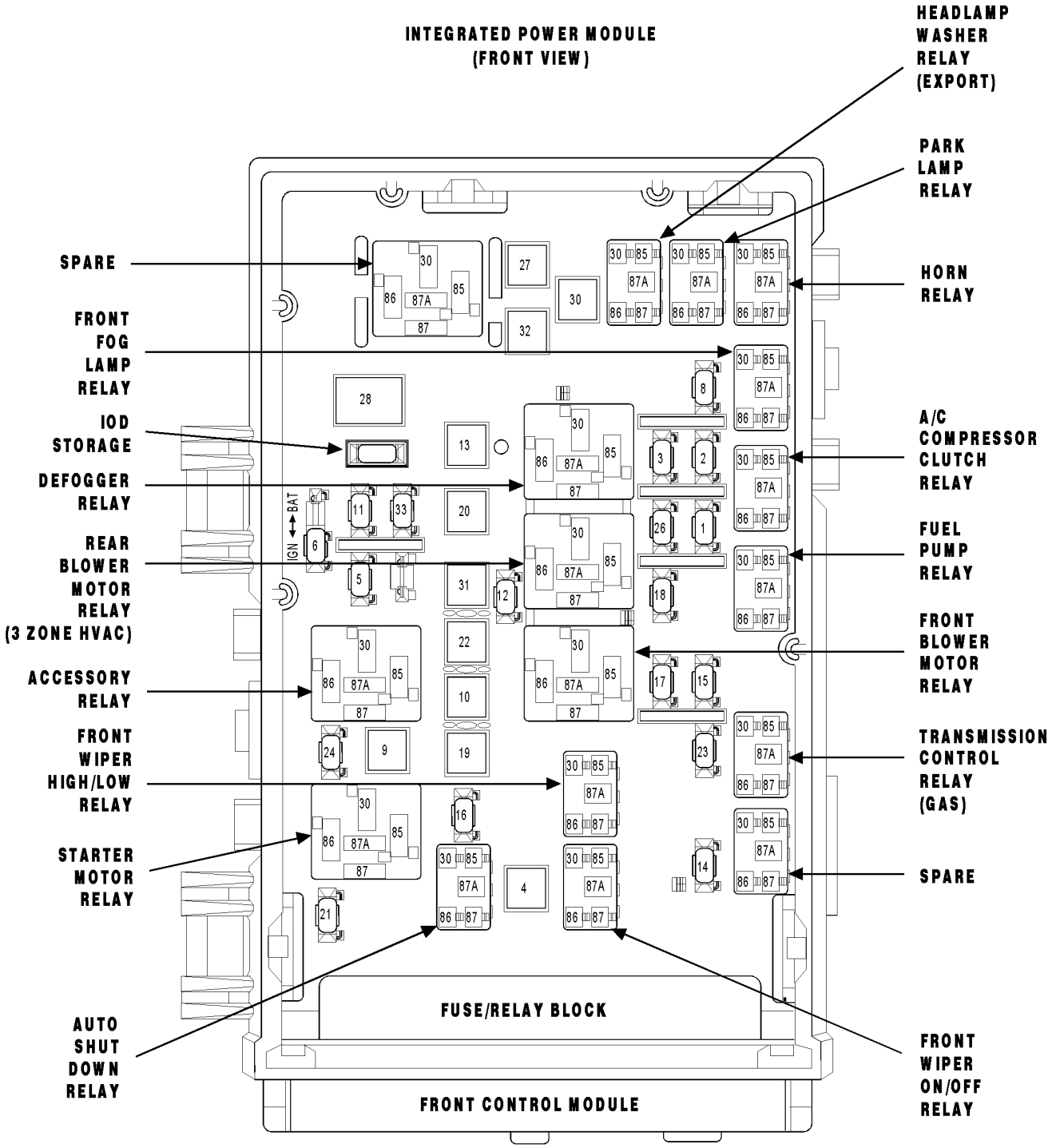
INTEGRATED POWER MODULE
(FRONT VIEW)
HEADLAMP WASHER RELAY (EXPORT)
PARK LAMP RELAY
SPARE
HORN RELAY
FRONT FOG LAMP RELAY
IOD STORAGE
A/C COMPRESSOR CLUTCH RELAY
DEFOGGER RELAY
FUEL PUMP RELAY
REAR BLOWER MOTOR RELAY (3 ZONE HVAC)
FRONT BLOWER MOTOR RELAY
ACCESSORY RELAY
TRANSMISSION CONTROL RELAY (GAS)
FRONT WIPER HIGH/LOW RELAY
SPARE
STARTER MOTOR RELAY
AUTO SHUT DOWN RELAY
FRONT WIPER ON/OFF RELAY
IGN
BAT
FUSE/RELAY BLOCK
FRONT CONTROL MODULE

A/C COMPRESSOR CLUTCH RELAY

CAV	CIRCUIT	FUNCTION
30	INTERNAL	FUSED B(+)
85	C13 20LB/OR (DIESEL)	A/C COMPRESSOR CLUTCH RELAY CONTROL
85	C13 18LB/OR (GAS)	A/C CLUTCH RELAY CONTROL
86	K342 16BR/WT (DIESEL)	ECM/PCM RELAY OUTPUT
86	F202 20PK/GY (GAS)	FUSED IGNITION SWITCH OUTPUT (RUN-START)
87	C3 20DB/YL	A/C COMPRESSOR CLUTCH RELAY OUTPUT
87A	-	-

AUTO SHUT DOWN RELAY (GAS)

CAV	CIRCUIT	FUNCTION
30	INTERNAL	FUSED B(+)
85	K51 18BR/WT	ASD RELAY CONTROL
86	INTERNAL	FUSED B(+)
87	K342 16BR/WT	ASD RELAY OUTPUT
87A	-	-

FUEL PUMP RELAY (GAS)

CAV	CIRCUIT	FUNCTION
30	N1 18DB/OR	FUEL PUMP RELAY OUTPUT
85	K31 18BR	FUEL PUMP RELAY CONTROL
86	INTERNAL	FUSED IGNITION SWITCH OUTPUT (RUN-START)
87	INTERNAL	FUSED B(+)
87A	-	-

STARTER MOTOR RELAY

CAV	CIRCUIT	FUNCTION
30	INTERNAL	FUSED B(+)
85	T752 20DG/OR (DIESEL)	STARTER MOTOR RELAY CONTROL
85	T752 18DG/OR (GAS)	STARTER MOTOR RELAY CONTROL
86	INTERNAL	FUSED IGNITION SWITCH OUTPUT (START)
87	T750 12YL/GY	STARTER MOTOR RELAY OUTPUT
87A	-	-

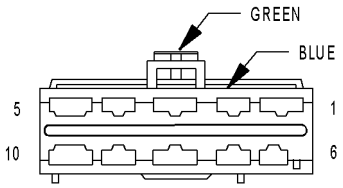

INTEGRATED POWER MODULE C2

INTEGRATED POWER MODULE C2 - GREEN/BLUE 10 WAY

CAV	CIRCUIT	FUNCTION
1	N173 18DB/VT (GAS)	RAD FAN RELAY CONTROL
2	V53 12BR/OR (EXPORT)	HEADLAMP WASHER RELAY OUTPUT
3	L60 18WT/TN	RIGHT FRONT TURN SIGNAL DRIVER
4	L13 18WT/YL (EXPORT)	HEADLAMP ADJUST SIGNAL
5	X2 18DG/OR	HORN RELAY OUTPUT
6	L90 18WT/OR (FOG LAMPS)	FRONT FOG LAMP RELAY OUTPUT
7	L61 18WT/LB	LEFT FRONT TURN SIGNAL DRIVER
8	-	-
9	A112 12OR/RD	FUSED B(+)
10	L89 18WT/YL (FOG LAMPS)	FRONT FOG LAMP RELAY OUTPUT

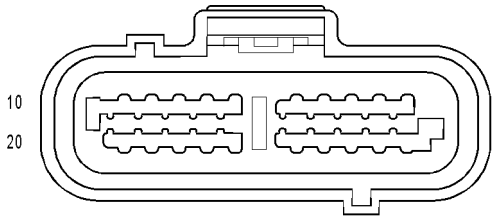

INTEGRATED POWER MODULE C3

INTEGRATED POWER MODULE C3 - 20 WAY

CAV	CIRCUIT	FUNCTION
1	N21 20DB/TN (DIESEL)	LIFT PUMP RELAY CONTROL
1	Z115 20BK/OR (GAS)	GROUND
2	F1 18PK/WT	FCM OUTPUT (UNLOCK-RUN-START)
3	T751 20YL (DIESEL)	FUSED IGNITION SWITCH OUTPUT (START)
3	T751 18YL (GAS)	FUSED IGNITION SWITCH OUTPUT (START)
4	T2 18DG/WT (MTX)	TRS REVERSE SENSE
5	N2 18DB/YL (DIESEL)	LIFT PUMP RELAY OUTPUT
5	T16 18YL/OR (GAS EATX)	TRANSMISSION CONTROL RELAY OUTPUT
6	F202 20PK/GY (DIESEL)	FUSED IGNITION SWITCH OUTPUT (RUN-START)
6	T15 18YL/BR (GAS EATX)	TRANSMISSION CONTROL RELAY CONTROL
7	C3 20DB/YL	A/C CLUTCH RELAY OUTPUT
8	Z114 18BK/LG (DIESEL)	GROUND
8	K31 18BR (GAS)	FUEL PUMP RELAY CONTROL
9	C13 20LB/OR (DIESEL)	A/C COMPRESSOR CLUTCH RELAY CONTROL
9	C13 18LB/OR (GAS)	A/C COMPRESSOR CLUTCH RELAY CONTROL
10	A119 16RD/OR (DIESEL)	FUSED B(+)
11	C41 20LB/DG (DIESEL)	CABIN HEATER ASSIST CONTROL
12	-	-
13	D25 20WT/VT (DIESEL MTX)	PCI BUS
13	D25 18WT/VT (GAS/ DIESEL EATX)	PCI BUS
14	T752 20DG/OR (DIESEL)	STARTER MOTOR RELAY CONTROL
14	T752 18DG/OR (GAS)	STARTER RELAY CONTROL
15	Z116 18BK/VT	GROUND
16	K51 20BR/WT (DIESEL)	ECM/PCM RELAY CONTROL
16	K51 18BR/WT (GAS)	ASD RELAY CONTROL
17	F202 20PK/GY	FUSED IGNITION SWITCH OUTPUT (RUN-START)
18	K173 18BR/VT (GAS)	RAD FAN RELAY CONTROL
19	K342 16BR/WT (DIESEL)	ECM/PCM RELAY OUTPUT
19	F202 20PK/GY (GAS)	FUSED IGNITION SWITCH OUTPUT (RUN-START)
20	A109 18OR/RD (GAS)	FUSED B(+)

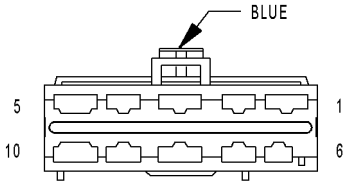

INTEGRATED POWER MODULE C4

INTEGRATED POWER MODULE C4 - BLUE 10 WAY

CAV	CIRCUIT	FUNCTION
1	Z127 12BK (ASSY. PLANT EVAC & FILL)	GROUND
2	T750 12YL/GY	STARTER MOTOR RELAY OUTPUT
3	K342 16BR/WT (DIESEL)	ECM/PCM RELAY OUTPUT
3	K342 16BR/WT (GAS)	ASD RELAY OUTPUT
4	F500 16DG/PK (ASSY. PLANT EVAC & FILL)	FUSED IGNITION SWITCH OUTPUT (RUN)
5	-	-
6	D25 18WT/VT (ABS)	PCI BUS
7	A107 12TN/RD (ABS)	FUSED B(+)
8	A111 12DG/RD (ABS)	FUSED B(+)
9	-	-
10	-	-

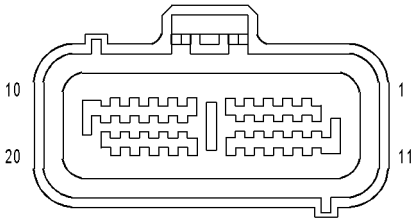

INTEGRATED POWER MODULE C7

INTEGRATED POWER MODULE C7 - 20 WAY

CAV	CIRCUIT	FUNCTION
1	C16 20DB/GY	FUSED DEFOGGER RELAY OUTPUT
2	T141 20YL/OR (DIESEL)	FUSED IGNITION SWITCH OUTPUT (START)
2	T751 20YL (GAS)	FUSED IGNITION SWITCH OUTPUT (START)
3	D25 20WT/VT	PCI BUS
4	L13 20WT/YL (EXPORT)	HEADLAMP ADJUST SIGNAL
5	K32 18DB/YL	BRAKE TRANSMISSION SHIFT INTERLOCK SOLENOID CONTROL
6	-	-
7	W7 20BR/GY	WIPER PARK SWITCH SENSE
8	B20 20DG/OR	BRAKE FLUID LEVEL SWITCH SENSE
9	F201 20PK/OR	ORC RUN-START DRIVER
10	-	-
11	A106 20LB/RD	FUSED B(+)
12	P201 20LG/DB (EXCEPT EXPORT/EXCEPT MEMORY)	ADJUSTABLE PEDALS RELAY CONTROL
13	F2 18PK/YL	FCM OUTPUT (UNLOCK-RUN-START)
14	-	-
15	A114 16GY/RD	FUSED B(+) (I.O.D.)
16	D123 20WT/BR	FLASH PROGRAM ENABLE
17	L50 18WT/TN (DIESEL)	PRIMARY BRAKE SWITCH SIGNAL
17	L50 18WT/TN (GAS)	BRAKE LAMP SWITCH OUTPUT
18	-	-
19	X3 20DG/VT	HORN SWITCH SENSE
20	F100 18PK/VT	ORC RUN ONLY DRIVER

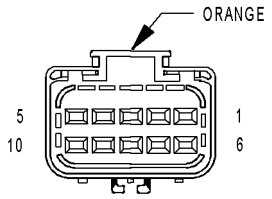

INTEGRATED POWER MODULE C8

INTEGRATED POWER MODULE C8 - ORANGE 10 WAY

CAV	CIRCUIT	FUNCTION
1	W3 14BR/WT	FRONT WIPER HIGH/LOW RELAY LOW SPEED OUTPUT
2	N1 16DB/OR (DIESEL)	FUEL HEATER RELAY OUTPUT
2	N1 18DB/OR (GAS)	FUEL PUMP RELAY OUTPUT
3	A108 18LG/RD (EXCEPT EXPORT)	FUSED B(+)
3	A108 20LG/RD (EXPORT)	FUSED B(+)
3	A108 20LG/RD (EXPORT)	FUSED B(+)
4	A103 18GY/RD	FUSED B(+)
5	L77 18WT/BR	FUSED PARK LAMP RELAY OUTPUT (LEFT)
6	W4 14BR/OR	FRONT WIPER HIGH/LOW RELAY HIGH SPEED OUTPUT
7	C51 12LB/BR (3 ZONE HVAC)	FUSED REAR BLOWER MOTOR RELAY OUTPUT
8	-	-
9	L78 18WT/OR	FUSED PARK LAMP RELAY OUTPUT (RIGHT)
10	L60 18WT/TN	RIGHT FRONT TURN SIGNAL DRIVER

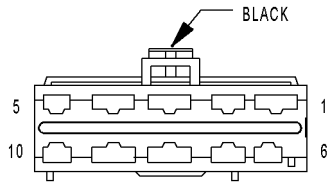

INTEGRATED POWER MODULE C9

INTEGRATED POWER MODULE C9 - BLACK 10 WAY

CAV	CIRCUIT	FUNCTION
1	A116 14YL/RD (HIGHLINE AUDIO)	FUSED B(+)
2	F20 18PK/WT	FUSED IGNITION SWITCH OUTPUT (RUN-START)
3	C15 12DB/WT	FUSED DEFOGGER RELAY OUTPUT
4	A105 18DB/RD	FUSED B(+)
5	L61 20WT/LB	LEFT FRONT TURN SIGNAL DIVER
6	A701 18BR/RD	FUSED B(+) (HAZARD)
6	A701 16BR/RD	FUSED B(+) (HAZARD)
7	F306 16DB/PK	FUSED ACCESSORY RELAY OUTPUT
8	F30 12PK/YL (POWER WINDOWS)	FUSED ACCESSORY RELAY OUTPUT
9	A115 12YL/RD	FUSED B(+)
10	F302 18GY/PK	FUSED ACCESSORY RELAY OUTPUT

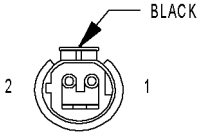

KNOCK SENSOR (EXCEPT EXPORT)

KNOCK SENSOR (EXCEPT EXPORT) - BLACK 2 WAY

CAV	CIRCUIT	FUNCTION
1	K42 18DB/YL	KS SIGNAL
2	K942 18BR/LG	KS RETURN

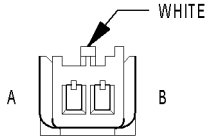

LEFT SPEED CONTROL SWITCH

LEFT SPEED CONTROL SWITCH - WHITE 2 WAY

CAV	CIRCUIT	FUNCTION
A	V37 20VT (DIESEL)	SPEED CONTROL SWITCH SIGNAL
A	V37 20VT (GAS)	S/C SWITCH NO. 1 SIGNAL
B	Z23 20BK/VT	LEFT SPEED CONTROL SWITCH GROUND

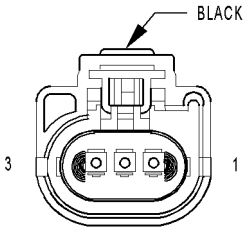

MANIFOLD ABSOLUTE PRESSURE SENSOR (GAS)

MANIFOLD ABSOLUTE PRESSURE SENSOR (GAS) - BLACK 3 WAY

CAV	CIRCUIT	FUNCTION
1	K1 18VT/BR	MAP SIGNAL
2	K900 18DB/DG	SENSOR GROUND
3	F855 18PK/YL	5 VOLT SUPPLY

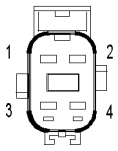

OXYGEN SENSOR 1/1 UPSTREAM (GAS)

OXYGEN SENSOR 1/1 UPSTREAM (GAS) - 4 WAY

CAV	CIRCUIT	FUNCTION
1	Z42 18BK/LG	GROUND
2	K99 18BR/LG	O2 1/1 HEATER CONTROL
3	K902 18BR/DG	O2 RETURN (UP)
4	K41 18DB/LB	O2 1/1 SIGNAL

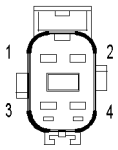

OXYGEN SENSOR 1/2 DOWNSTREAM (GAS)

OXYGEN SENSOR 1/2 DOWNSTREAM (GAS) - 4 WAY

CAV	CIRCUIT	FUNCTION
1	Z43 18BK/DB	GROUND
2	K299 18BR/WT	O2 1/2 HEATER CONTROL
3	K904 18DB/DG (2.4L)	O2 RETURN (DOWN)
3	K904 18BR/DG (3.3L/3.8L)	O2 RETURN (DOWN)
4	K141 18DB/YL	O2 1/2 SIGNAL

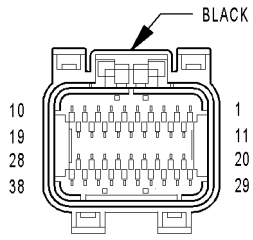

POWERTRAIN CONTROL MODULE C1

POWERTRAIN CONTROL MODULE C1 - BLACK 38 WAY

CAV	CIRCUIT	FUNCTION
1	-	-
2	-	-
3	-	-
4	-	-
5	-	-
6	-	-
7	-	-
8	-	-
9	Z130 18BK/BR	GROUND
10	-	-
11	F202 20PK/GY	FUSED IGNITION SWITCH OUTPUT (RUN-START)
12	F1 18PK/WT (EATX)	FCM OUTPUT (UNLOCK-RUN-START)
13	N7 18DB/OR (MTX)	VEHICLE SPEED SENSOR SIGNAL
14	-	-
15	-	-
16	-	-
17	-	-
18	Z131 18BK/DG	GROUND
19	-	-
20	G6 16VT/GY	ENGINE OIL PRESSURE SENSOR SIGNAL
21	-	-
22	G31 18VT/LG	AAT SIGNAL
23	-	-
24	-	-
25	D20 20WT/LG	SCI RECEIVE (PCM)
26	D123 20WT/BR (2.4L EATX)	SCI RECEIVE (TCM)
26	D123 20WT/OR (3.3L/3.8L)	SCI RECEIVE (TCM)
27	-	-
28	-	-
29	A109 18OR/RD	FUSED B(+)
30	T751 18YL	FUSED IGNITION SWITCH OUTPUT (START)
31	K141 18DB/YL	O2 1/2 SIGNAL
32	K904 18DB/DG (2.4L)	O2 RETURN (DOWN)
32	K904 18BR/DG (3.3L/3.8L)	O2 RETURN (DOWN)
33	-	-
34	-	-
35	-	-
36	D21 20WT/DG (2.4L)	SCI TRANSMIT (PCM)
36	D21 20WT/BR (3.3L/3.8L)	SCI TRANSMIT (PCM)
37	D15 18DG/YL (EATX)	SCI TRANSMIT (TCM)
38	D25 18WT/VT	PCI BUS

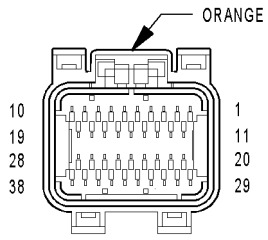

POWERTRAIN CONTROL MODULE C2

POWERTRAIN CONTROL MODULE C2 - ORANGE 38 WAY

CAV	CIRCUIT	FUNCTION
1	-	-
2	-	-
3	-	-
4	K58 16BR/VT (3.3L/3.8L)	INJECTOR CONTROL NO. 6
5	K38 16BR/OR (3.3L/3.8L)	INJECTOR CONTROL NO. 5
6	-	-
7	K18 16BR/OR (3.3L/3.8L)	COIL CONTROL NO. 3
8	K35 18DB/VT (3.3L)	EGR SOLENOID CONTROL
9	K17 16DB/TN	IGNITION COIL NO. 2 DRIVER
10	K19 16DB/DG	COIL CONTROL NO. 1
11	K14 16 BR/TN	INJECTOR CONTROL NO. 4
12	K13 16BR/LB	INJECTOR CONTROL NO. 3
13	K12 16BR/DB	INJECTOR CONTROL NO. 2
14	K11 16BR/YL	INJECTOR CONTROL NO. 1
15	-	-
16	-	-
17	-	-
18	K99 18BR/LG	O2 1/1 HEATER CONTROL
19	K20 18BR/GY	GEN FIELD CONTROL
20	K2 18VT/OR	ECT SIGNAL
21	K22 18BR/OR	TP SIGNAL
22	K34 18DB/LG (3.3L)	EGR SOLENOID SIGNAL
23	K1 18VT/BR	MAP SIGNAL
24	K942 18BR/LG (EXCEPT 3.3L)	KS RETURN
25	K42 18DB/YL (EXCEPT 3.3L)	KS SIGNAL
26	-	-
27	K900 18DB/DG	SENSOR GROUND
28	K961 18BR/VT	IAC RETURN
29	F855 20PK/YL	5 VOLT SUPPLY
30	K21 18DB/LG	IAT SIGNAL
31	K41 18DB/LB	O2 1/1 SIGNAL
32	K902 18BR/DG	O2 RETURN (UP)
33	-	-
34	K44 18DB/GY	CMP SIGNAL
35	K24 18BR/LB	CKP SIGNAL
36	-	-
37	-	-
38	K61 18VT/GY	IAC MOTOR CONTROL

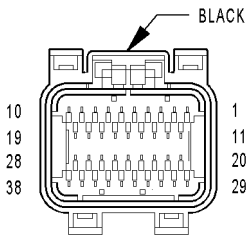

POWERTRAIN CONTROL MODULE C3

POWERTRAIN CONTROL MODULE C3 - NATURAL 38 WAY

CAV	CIRCUIT	FUNCTION
1	-	-
2	-	-
3	K51 18BR/WT	ASD RELAY CONTROL
4	-	-
5	V35 18VT/OR	S/C VENT CONTROL
6	K173 18BR/VT	RAD FAN RELAY CONTROL
7	V32 18VT/YL	SPEED CONTROL SUPPLY
8	K106 20VT/LB (EXCEPT EXPORT)	NVLD SOL CONTROL
9	K299 18BR/WT	O2 1/2 HEATER CONTROL
10	-	-
11	C13 18LB/OR	A/C CLUTCH RELAY CONTROL
12	V36 18VT/YL	S/C VACUUM CONTROL
13	-	-
14	-	-
15	-	-
16	-	-
17	-	-
18	-	-
19	K342 16BR/WT	ASD RELAY OUTPUT
20	K52 18DB/WT	EVAP PURGE CONTROL
21	T141 18YL (MTX EXPORT)	FUSED IGNITION SWITCH OUTPUT (START)
22	-	-
23	B29 18DG/WT	BRAKE SWITCH SIGNAL
24	-	-
25	-	-
26	-	-
27	-	-
28	K342 16BR/WT	ASD RELAY OUTPUT
29	K70 18DB/BR	EVAP PURGE SIGNAL
30	-	-
31	C18 18LB/BR	A/C PRESSURE SIGNAL
32	K91 18DB/YL	BATTERY TEMP SIGNAL
33	-	-
34	V37 18VT	S/C SWITCH NO. 1 SIGNAL
35	K107 20VT/WT (EXCEPT EXPORT)	NVLD SWITCH SIGNAL
36	-	-
37	K31 18BR	FUEL PUMP RELAY CONTROL
38	T752 18DG/OR	STARTER RELAY CONTROL

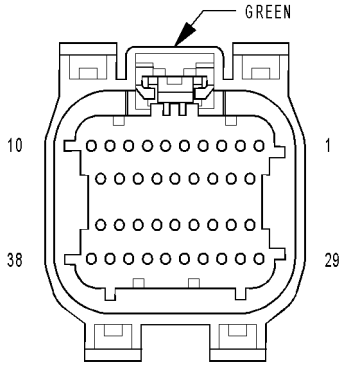

POWERTRAIN CONTROL MODULE C4

POWERTRAIN CONTROL MODULE C4 - GREEN 38 WAY

CAV	CIRCUIT	FUNCTION
1	T60 18YL/GY	OVERDRIVE SOLENOID CONTROL
2	T59 18DB/LB	UNDERDRIVE SOLENOID CONTROL
3	-	-
4	-	-
5	-	-
6	T19 18YL/DB	2-4 SOLENOID CONTROL
7	-	-
8	-	-
9	-	-
10	T20 18DG/WT	LOW/REVERSE SOLENOID CONTROL
11	-	-
12	-	-
13	Z133 16BK/LG	GROUND
14	Z133 16BK/LG	GROUND
15	T1 18DG/LB	TRS T1 SENSE
16	T3 18DG/DB	TRS T3 SENSE
17	-	-
18	T15 18YL/BR	TRANSMISSION CONTROL RELAY CONTROL
19	T16 18YL/OR	TRANSMISSION CONTROL RELAY OUTPUT
20	-	-
21	-	-
22	T9 18DG/TN	OVERDRIVE PRESSURE SWITCH SENSE
23	-	-
24	-	-
25	-	-
26	-	-
27	T41 18DG/GY	TRS T41 SENSE
28	T16 18YL/OR	TRANSMISSION CONTROL RELAY OUTPUT
29	T50 18YL/TN	LOW/REVERSE PRESSURE SWITCH SENSE
30	T47 18YL/DG	2-4 PRESSURE SWITCH SENSE
31	-	-
32	T14 18DG/BR	OUTPUT SPEED SENSOR SIGNAL
33	T52 18DG/WT	INPUT SPEED SENSOR SIGNAL
34	T13 18DG/VT	SPEED SENSOR GROUND
35	T54 18DG/OR	TRANSMISSION TEMPERATURE SENSOR SIGNAL
36	-	-
37	T42 18DG/YL	TRS T42 SENSE
38	T16 18YL/OR	TRANSMISSION CONTROL RELAY OUTPUT

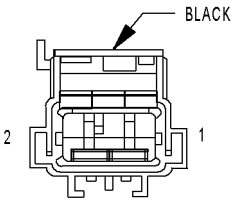

RADIATOR FAN NO. 1 (GAS)

RADIATOR FAN NO. 1 (GAS) - BLACK 2 WAY

CAV	CIRCUIT	FUNCTION
1	N23 12DB/DG	RADIATOR FAN RELAY OUTPUT
2	Z223 12BK/DG	GROUND

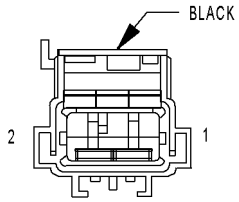

RADIATOR FAN NO. 2 (GAS)

RADIATOR FAN NO. 2 (GAS) - BLACK 2 WAY

CAV	CIRCUIT	FUNCTION
1	N23 12DB/DG	RADIATOR FAN RELAY OUTPUT
2	Z223 12BK/DG	GROUND

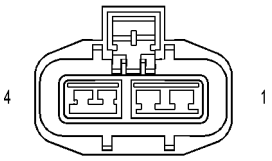

RADIATOR FAN RELAY (GAS)

RADIATOR FAN RELAY (GAS) - 4 WAY

CAV	CIRCUIT	FUNCTION
1	A112 12OR/RD	FUSED B(+)
2	N23 12DB/DG	RADIATOR FAN RELAY OUTPUT
3	Z723 18BK/DG	GROUND
4	N173 18DB/VT	RAD FAN RELAY CONTROL

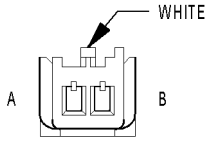

RIGHT SPEED CONTROL SWITCH

RIGHT SPEED CONTROL SWITCH - WHITE 2 WAY

CAV	CIRCUIT	FUNCTION
A	V37 20VT (DIESEL)	SPEED CONTROL SWITCH SIGNAL
A	V37 20VT (GAS)	S/C SWITCH NO. 1 SIGNAL
B	Z23 20BK/VT	RIGHT SPEED CONTROL SWITCH GROUND

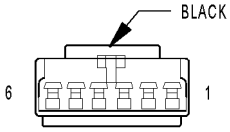

SENTRY KEY REMOTE ENTRY MODULE (SKREEM)

SENTRY KEY REMOTE ENTRY MODULE (SKREEM) - BLACK 6 WAY

CAV	CIRCUIT	FUNCTION
1	-	-
2	D25 20WT/VT	PCI BUS
3	-	-
4	F20 20PK/WT	FUSED IGNITION SWITCH OUTPUT (RUN-START)
5	Z120 22BK/WT	GROUND
6	A114 20GY/RD	FUSED B(+) (I.O.D.)

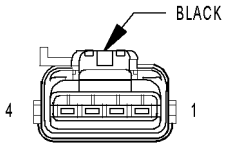

SPEED CONTROL SERVO (GAS)

SPEED CONTROL SERVO (GAS) - BLACK 4 WAY

CAV	CIRCUIT	FUNCTION
1	V36 18VT/YL	S/C VACUUM CONTROL
2	V35 18VT/OR	S/C VENT CONTROL
3	V30 20VT/WT	S/C BRAKE SWITCH OUTPUT
4	Z155 18BK/LG	GROUND

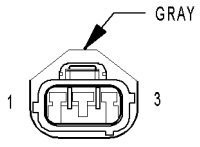

THROTTLE POSITION SENSOR (GAS)

THROTTLE POSITION SENSOR (GAS) - GRAY 3 WAY

CAV	CIRCUIT	FUNCTION
1	K900 18DB/DG	SENSOR GROUND
2	K22 18BR/OR	TP SIGNAL
3	F855 20PK/YL	5 VOLT SUPPLY

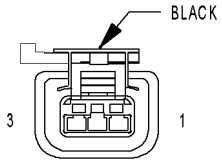

VEHICLE SPEED SENSOR (MTX)

VEHICLE SPEED SENSOR (MTX) - BLACK 3 WAY

CAV	CIRCUIT	FUNCTION
1	F855 20PK/YL (2.4L)	5 VOLT SUPPLY
1	F202 18PK/GY (DIESEL)	FUSED IGNITION SWITCH OUTPUT (RUN-START)
2	K900 18DB/DG (2.4L)	SENSOR GROUND
2	K900 20DB/DG (DIESEL)	SENSOR GROUND
3	N7 18DB/OR (2.4L)	VEHICLE SPEED SIGNAL
3	N7 20DB/OR (DIESEL)	VEHICLE SPEED SENSOR SIGNAL

10.0 SCHEMATIC DIAGRAMS

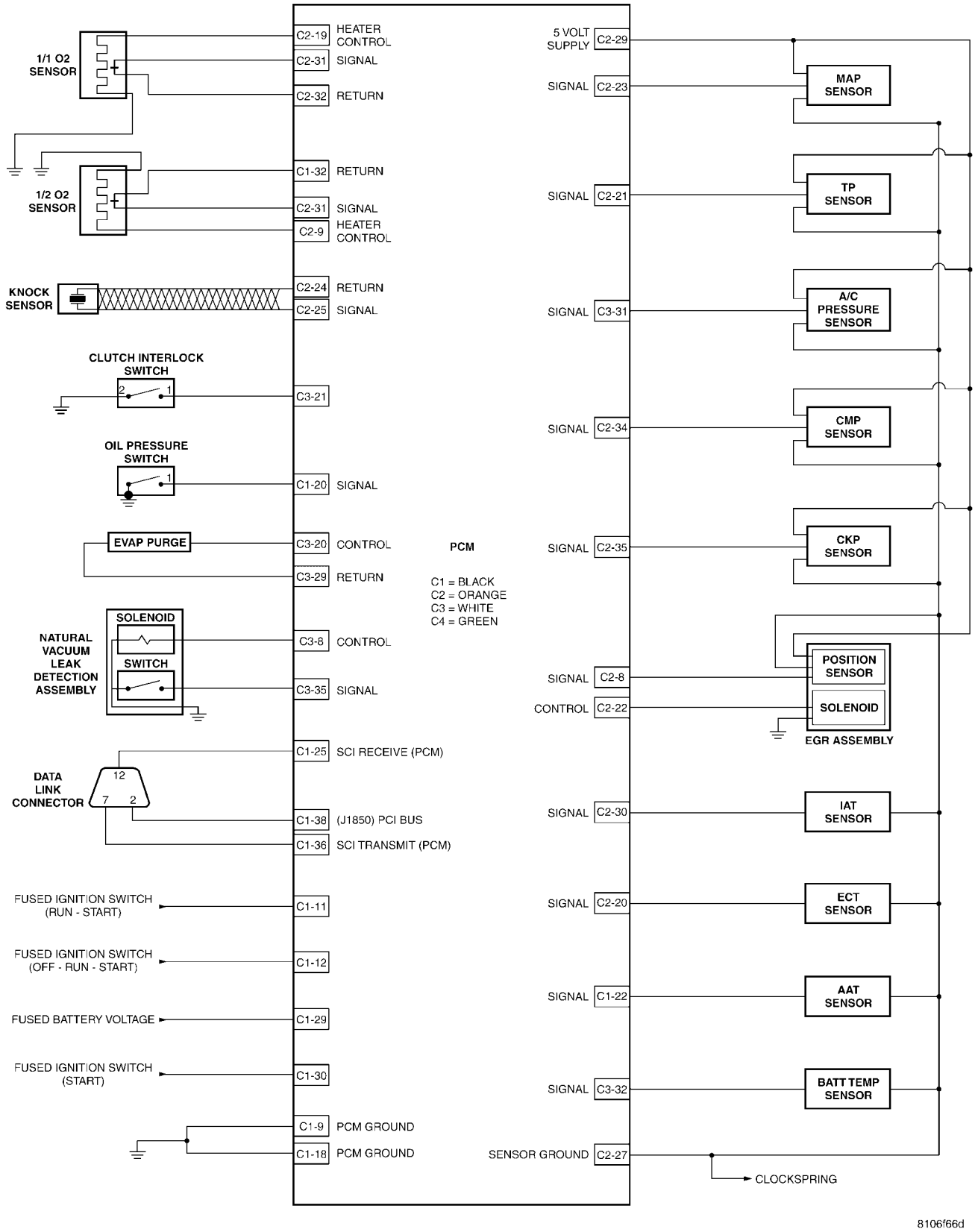

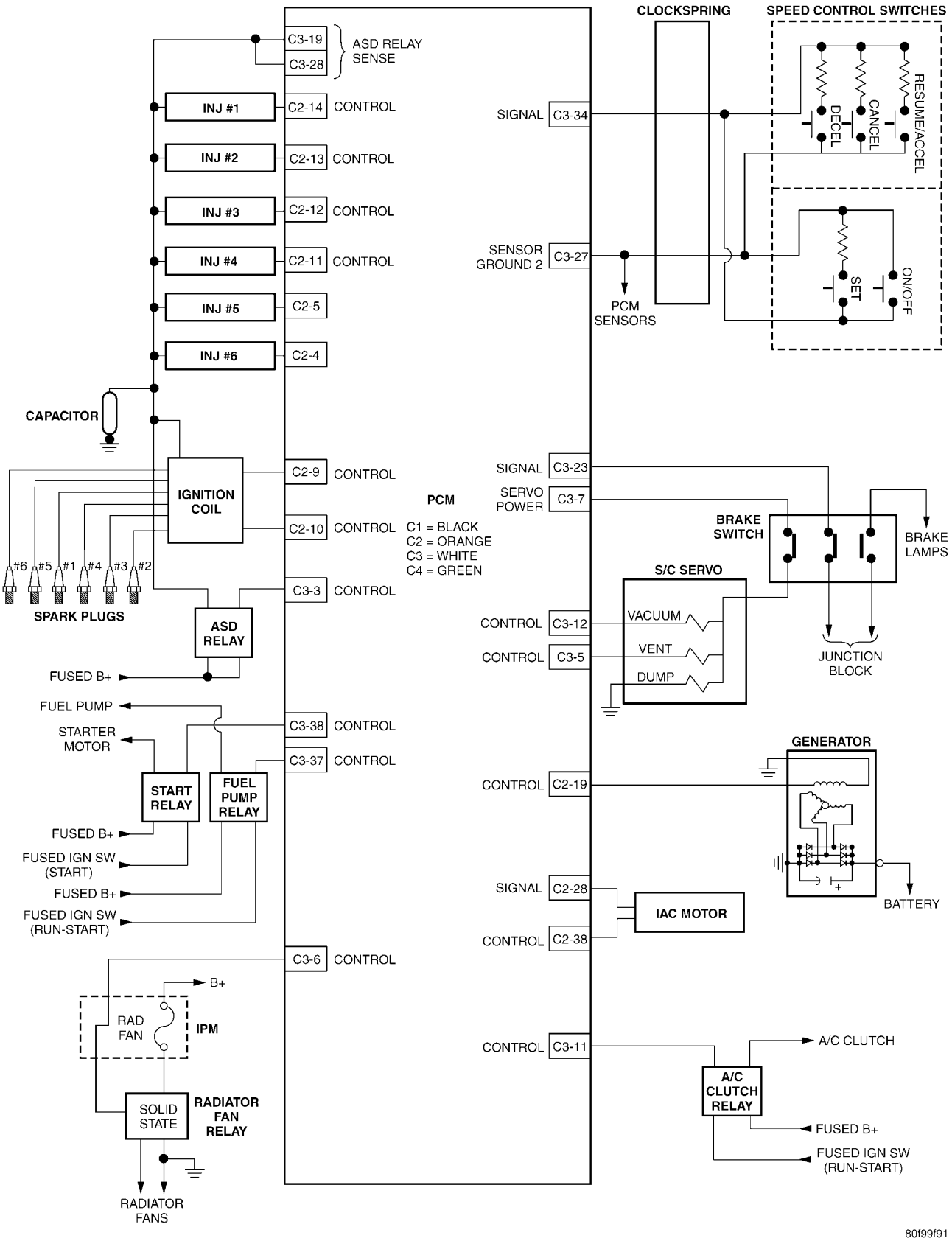
CLOCKSPRING
SPEED CONTROL SWITCHES
C3-19
C3-28
ASD RELAY SENSE
INJ #1
C2-14
CONTROL
SIGNAL
C3-34
RESUME/ACCEL
DECEL
CANCEL
INJ #2
C2-13
CONTROL
INJ #3
C2-12
CONTROL
INJ #4
C2-11
CONTROL
SENSOR GROUND 2
C3-27
SET
ON/OFF
PCM SENSORS
INJ #5
C2-5
INJ #6
C2-4
CAPACITOR
SIGNAL
C3-23
SERVO POWER
C3-7
C2-9
CONTROL
IGNITION COIL
PCM
C1 = BLACK
C2 = ORANGE
C3 = WHITE
C4 = GREEN
C2-10
CONTROL
BRAKE SWITCH
BRAKE LAMPS
#6 #5 #1 #4 #3 #2
SPARK PLUGS
C3-3
CONTROL
S/C SERVO
CONTROL
C3-12
VACUUM
ASD RELAY
CONTROL
C3-5
VENT
DUMP
JUNCTION BLOCK
FUSED B+
FUEL PUMP
STARTER MOTOR
C3-38
CONTROL
C3-37
CONTROL
GENERATOR
START RELAY
FUEL PUMP RELAY
CONTROL
C2-19
FUSED B+
FUSED IGN SW (START)
FUSED B+
FUSED IGN SW (RUN-START)
SIGNAL
C2-28
IAC MOTOR
CONTROL
C2-38
BATTERY
C3-6
CONTROL
B+
RAD FAN
IPM
CONTROL
C3-11
A/C CLUTCH
SOLID STATE
RADIATOR FAN RELAY
A/C CLUTCH RELAY
FUSED B+
FUSED IGN SW (RUN-START)
RADIATOR FANS

80f99f91

11.0 CHARTS AND GRAPHS

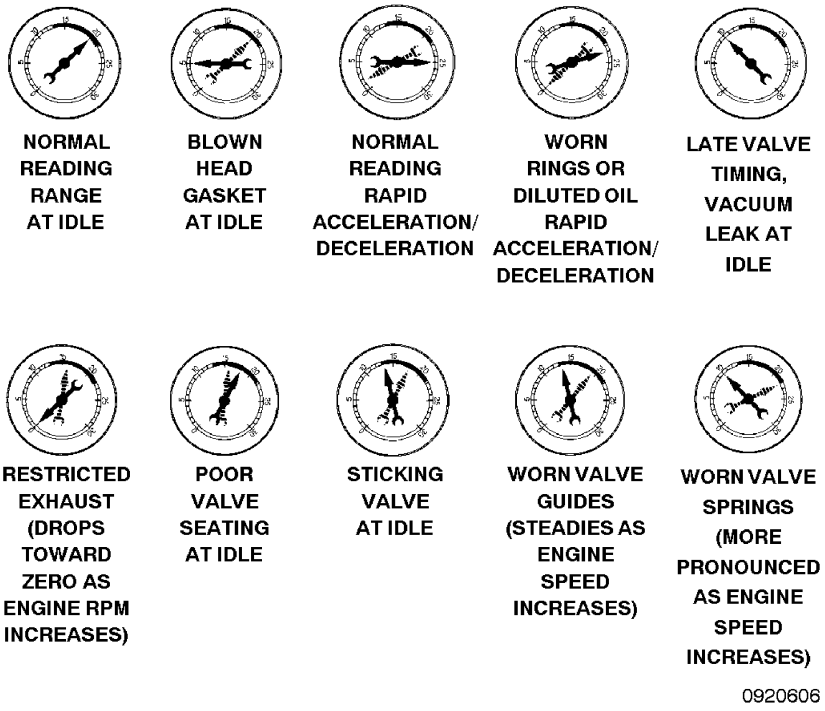

NGC VEHICLES

NGC TYPICAL SCOPE PATTERNS
CAMSHAFT AND CRANKSHAFT SENSOR

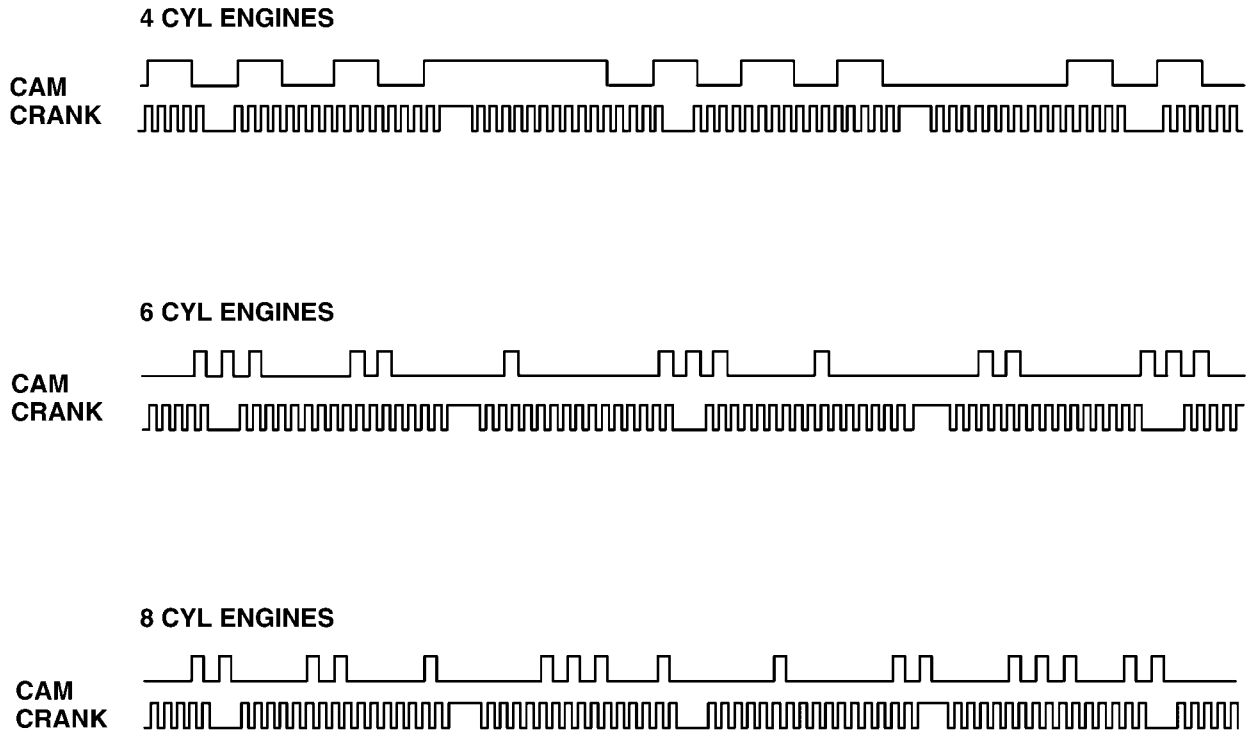

SBEC VEHICLES

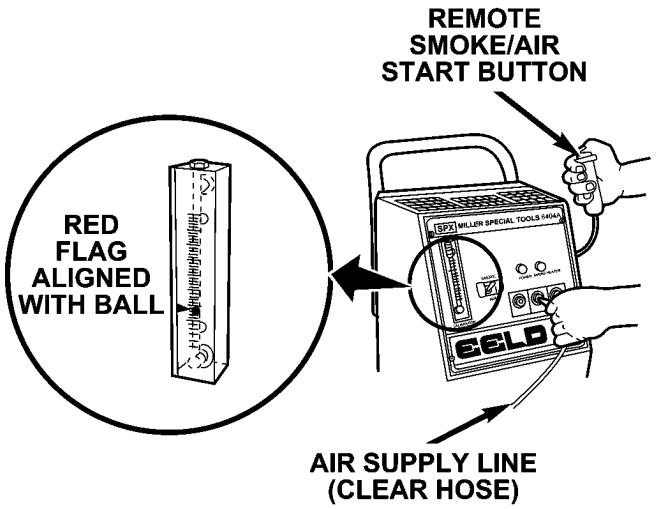

810f8370

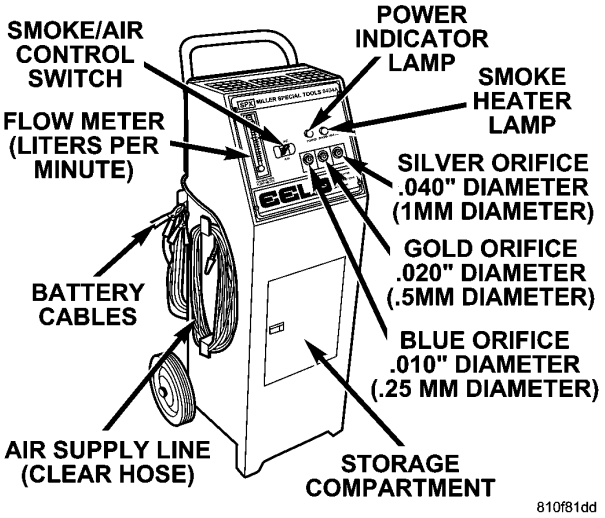

810f81dd

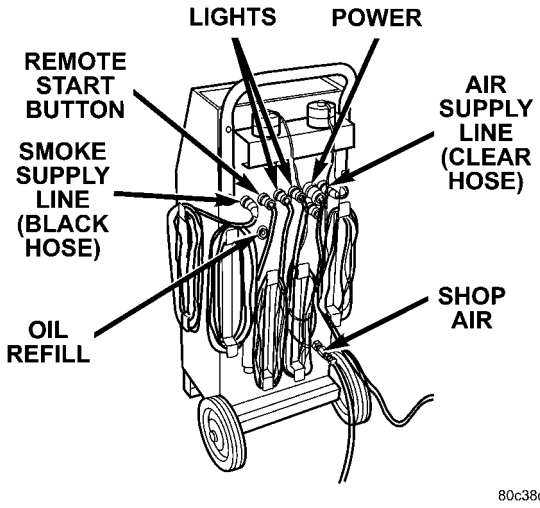

80c38d69

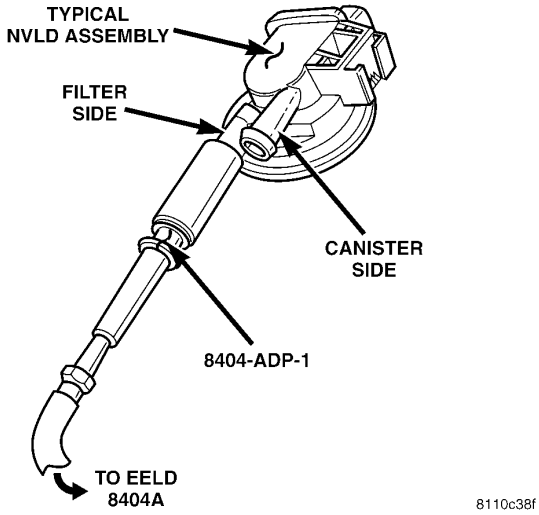

8110c38f

O2 SENSOR CONFIGURATION

JR	4 CYLINDER	1/1	UPSTREAM
JR	4 CYLINDER	1/2	DOWNSTREAM
JR	2.7L V-6	1/1	REAR BANK UP
JR	2.7L V-6	1/2	REAR BANK DOWN
JR	2.7L V-6	2/1	FRONT BANK UP
JR	2.7L V-6	2/2	FRONT BANK DOWN
LH	V-6 ALL	1/1	RIGHT BANK UP
LH	V-6 ALL	1/2	RIGHT BANK DOWN
LH	V-6 ALL	2/1	LEFT BANK UP
LH	V-6 ALL	2/2	LEFT BANK DOWN
RS/RG	ALL	1/1	UPSTREAM
RS/RG	ALL	1/2	DOWNSTREAM
PL	ALL	1/1	UPSTREAM
PL	ALL	1/2	DOWNSTREAM
PR	3.5L	1/1	RIGHT BANK UP
PR	3.5L	1/2	RIGHT BANK DOWN
PR	3.5L	2/1	LEFT BANK UP
PR	3.5L	2/2	LEFT BANK DOWN
PT	ALL	1/1	UPSTREAM
PT	ALL	1/2	DOWNSTREAM

80aa3148

NOTES

DIAGNOSTIC TEST PROCEDURES — TELL US!

DaimlerChrysler Corporation is constantly working to provide the technician the best diagnostic manuals possible. Your comments and recommendations regarding the diagnostic manuals and procedures are appreciated.

To best understand your suggestion, please complete the form giving us as much detail as possible.

Model _____ **Year** _____ **Body Type** _____ **Engine** _____

Transmission _____ **Vehicle Mileage** _____ **MDH** _____

Diagnostic Procedure _____ **Book No.** _____ **Page** _____

Comments/recommendations (if necessary, draw sketch)

Name _____

_____

Submitted by: _____

Address _____

City/State/Zip _____

Business Phone # _____

All comments become property of DaimlerChrysler Corporation and may be used without compensation.

(FOLD HERE)

NO POSTAGE
NECESSARY
IF MAILED
IN THE
UNITED
STATES

BUSINESS REPLY MAIL

FIRST CLASS MAIL PERMIT NO. 124 CENTER LINE, MI

POSTAGE WILL BE PAID BY ADDRESSEE

DaimlerChrysler Corporation
Dealer Technical Operations
800 Chrysler Drive
CIMS 486-02-76
Auburn Hills, MI 48326-2757

(FOLD HERE)